CONSTRUCTION METHODS ASSESSMENT
FOR
COMPACTED SALT PANEL CLOSURES

December 2012

NUCLEAR WASTE PARTNERSHIP LLC

Ben Zimmerly
Tami Moffatt
John Zavicar IV

INDEX

1. INTRODUCTION **1**

2. SUMMARY **1**

3. LABORATORY TESTING **5**

4. FIELD TESTING **7**

4.1. Location 7

4.2. Equipment 7

4.3. Scenario 1 8

4.3.1. Lower Zone 8

4.3.2. Upper Zone 10

4.3.3. Construction Time 13

4.4. Scenario 2 13

4.4.1. Lower Zone 13

4.4.2. Upper Zone 16

4.4.3. Construction Time 17

4.5. Scenario 3 18

4.5.1. ROM Salt Placement 18

4.5.2. Construction Time 19

5. **REFERENCES** **20**

FIGURES:

Figure 1. Compacted Salt Test Area Plan and Cross Section

Figure 2. LHD Placing ROM Salt On Lower Zone Lift

Figure 3. Walk-Behind Roller Compactor Compacting Lower Zone Lift

Figure 4. Fletcher With Push-Plate Attachment

Figure 5. Fletcher Compacting Upper Zone

TABLES:

Table 1 - Scenario 1 Lower Zone Moisture/Density

Table 2 - Scenario 1 Upper Zone Moisture/Density

Table 3 - Scenario 1 Moisture/Density by Position in the Upper Zone

Table 4 - Scenario 2 Lower Zone Moisture/Density

Table 5 - Scenario 2 Upper Zone Moisture/Density

Table 6 - Scenario 3 Moisture/Density by Position in the Lift

APPENDIX A

1. Laboratory Test Reports for The Nuclear Density Testing and Sand-Cone Testing Performed Prior To The Actual Field Testing
2. Laboratory Test Reports For the Sieve Analysis Performed On The ROM Salt Used For The Proctor Evaluation And On The ROM Salt Used For The Field Testing
3. Proctor Evaluation Data

APPENDIX B-1

Scenario 1

1. The Work Package Data Log Sheets Attachment A – Lower Zone Lift Placement Information
2. The Work Package Data Log Sheets Attachment B – Lower Zone Lift Testing Results

APPENDIX B-2

Scenario 2

1. The Work Package Data Log Sheets Attachment A – Lower Zone Lift Placement Information
2. The Work Package Data Log Sheets Attachment B – Lower Zone Lift Testing Results

APPENDIX C-1

Scenario 1

1. The Work Package Data Log Sheets Attachment C – Upper Zone Lift Placement Information
2. The Work Package Data Log Sheets Attachment D – Upper Zone Lift Placement Information

APPENDIX C-2

Scenario 2

1. The Work Package Data Log Sheets Attachment C – Upper Zone Lift Placement Information
2. The Work Package Data Log Sheets Attachment D – Upper Zone Lift Placement Information

APPENDIX C-3

Scenario 3

1. The Work Package Data Log Sheets Attachment C – ROM Salt Placement Information
2. The Work Package Data Log Sheets Attachment D – ROM Salt Placement Information

APPENDIX D-1

Scenario 1

1. The Laboratory Test Reports For The Nuclear Density Testing Performed On the Lifts Of The Lower Zone
2. The Laboratory Test Reports For The Sand-Cone Testing Performed On the Lifts Of The Lower Zone

APPENDIX D-2

Scenario 2

1. The Laboratory Test Reports For The Nuclear Density Testing Performed On the Lifts Of The Lower Zone

APPENDIX E-1

Scenario 1

1. The Laboratory Test Reports For The Nuclear Density Testing Performed On the lifts Of The Upper Zone
2. The Laboratory Test Reports For The Sand-Cone Testing Performed On the Lifts Of The Upper Zone

APPENDIX E-2

Scenario 2

1. The Laboratory Test Reports For The Nuclear Density Testing Performed On the lifts Of the Upper Zone

APPENDIX E-3

Scenario 3

1. The Laboratory Test Reports For The Nuclear Density Testing Performed On the ROM Salt Placement

APPENDIX F-1

Scenario 1

1. The Summary Sheets For The Lower Lift Placement, Compaction And Down Time
2. The Summary Sheets For The Upper Lift Placement, Compaction And Down Time
3. The Summary Sheet For The Lower And Upper Lift Moisture/Density Data

APPENDIX F-2

Scenario 2

1. The Summary Sheets For The Lower Lift Placement, Compaction And Down Time
2. The Summary Sheets For The Upper Lift Placement, Compaction And Down Time
3. The Summary Sheet For The Lower And Upper Lift Moisture/Density Data

APPENDIX F-3

Scenario 3

1. The Summary Sheets For ROM Salt Placement And Down Time
2. The Summary Sheet For The Moisture/Density Data

APPENDIX G

1. The Data Sheet For The Walk-Behind Vibratory Roller Compactor Used To Compact The Lower Lifts
2. The Data Sheet For The LHD Used To Place The Lower And Upper Lifts.
3. The Data Sheet For The Fletcher Scaler Used To Push ROM Tight To Back And To Compact Upper Lifts

1. INTRODUCTION

In 2011, a new panel closure system (PCS) design was proposed to close the hazardous waste disposal units at the Waste Isolation Pilot Plant (WIPP). The proposed PCS, referred to as the WIPP Panel Closure (WPC), consisted of two barriers (i.e., either two standard bulkheads or one standard bulkhead and one block wall, if a block wall was previously installed) and emplacement of a minimum of 100 feet of compacted run-of-mine (ROM) salt between the two barriers. The proposed ROM salt PCS design called for emplacing three distinct zones ranging in compaction from 85% to 70% of the in-situ density of salt. ROM salt densities are reported as a percentage of the in-situ density of salt which is assumed to be 135 pounds per cubic foot (SDD AU00).

Compaction of ROM salt in zones, per the proposed draft specifications, had not been performed at the WIPP. Concerns over the constructability of the WPC arose due to the limited size of the drifts in which the WPC would be installed and the expected performance of the available equipment. A test plan was developed to demonstrate if the WPC could be constructed in accordance with the proposed compaction specifications using equipment currently at the WIPP or equipment that is readily available by renting or leasing. The proposed design was modified from three distinct horizontal layers to two zones. A lower zone was placed horizontally up to a height that could safely accommodate the equipment and an upper zone placed diagonally up to the back. If the compaction specifications could not be met, then the test plan would identify what level of compaction could be achieved. And finally, the best practices for the construction of the WPC would be established.

Three scenarios were developed for the test plan (Figure 1). Scenario 1 consisted of 1% (by weight) water added to the ROM salt and compaction of the material. Scenario 2 consisted of compaction of the ROM salt with no additional water added. Scenario 3 consisted of the ROM salt simply being placed and pushed up tight to the back without adding water or compaction.

The test plan also included laboratory testing to determine the moisture/density properties of the ROM salt used for this demonstration.

This report presents the data from the laboratory testing, a description of the emplacement and compaction methodology; and the moisture/density testing results for all three scenarios.

2. SUMMARY

2.1. Laboratory Testing

Sieve analysis, moisture determination and proctor evaluations were performed in the lab to determine the characteristics of the ROM salt used in the field testing. Gradational analysis indicates that about 9% of the ROM salt sample was greater than 3 inches, 7% passed the #80 screen, and about 3% passed the #200 screen. The natural moisture content of the ROM salt averaged 0.4%. The results of a modified proctor evaluation, using a 6 inch diameter mold,

produced a maximum density of about 108 to 109 pounds per cubic foot (80% to 81% of the density of in-situ salt) with optimum moisture of between 2.5% and 4.5%. The maximum density using a 4 inch diameter mold was a bit lower at about 107 pounds per cubic foot (79% of the density of in-situ salt) and the optimum moisture was higher at about 6%. The field testing showed that Scenario 1 and Scenario 2 were able to achieve about 93% (101 pounds per cubic foot) of the maximum proctor density on the lower zone and about 78% (85 pounds per cubic foot) on the upper zone. Scenario 3 field testing showed that the density achieved was about 83% (90 pounds per cubic foot) of the maximum proctor density.

The ASTM nuclear density method used for moisture/density determination was evaluated for use in salt prior to field testing. The nuclear density method produced acceptable density values but did not produce reasonable percent moisture values when compared to moisture sampling by ASTM D2216. The nuclear density method used for field testing was backed up by occasional sand-cone tests. The moisture content was determined from grab samples taken near the nuclear density locations.

2.2. Construction Scenarios

Scenario 1 consisted of ROM salt with 1% water added and compacted into two zones; a lower zone consisting of 6 inch thick horizontal lifts and an upper zone consisting of 12 inch thick diagonal lifts. The lower zone was 4 feet thick and the upper zone was 8.5 feet thick. The thicknesses of the lower and upper zone were based on the operational clearance required for the equipment used to emplace and compact the ROM salt. The density achieved for either zone did not reach the proposed compaction specification. Density measurements, at select locations, were taken after multiple compaction passes to determine a correlation between density and compaction effort.

A load-haul-dump (LHD) was used to place each lift of the lower zone and roughly smooth it out. A skid-steer loader was needed to get a uniform lift thickness of 6 to 8 inch. Placing the lifts with a consistent and uniform thickness proved challenging. The walk-behind roller compactor was awkward to maneuver but was simple to operate.

As anticipated, on the upper zone, the LHD could place ROM salt to within about 18 to 24 inches of the back. A modified Fletcher scaler with the push-plate attachment, worked well to push the ROM salt tight to the back. The slope of each lift, on the upper zone, was about 30 degrees once emplacement and compaction was completed. The first seven lifts of the upper zone were compacted using the boom to push the material tight and then the push-plate was vibrated. This method was discontinued because the vibration caused material to loosen and slide down the slope of the lift. The remaining lifts were compacted by just using the boom to push the push-plate into the lift.

Water was added to the ROM salt using an adjustable nozzle set to deliver 20 gallons per minute and timing the length of application based on the cubic yards of ROM salt in each lift. Results from moisture sampling showed that this method was fairly consistent. For the lower zone after six

compaction passes the moisture averaged about 1.4% and for the upper zone the moisture averaged about 1.3%. The natural moisture for ROM salt was determined to be 0.25% to 0.5%.

The average dry density achieved for the lower zone after six compaction passes was about 75% of the in-situ density of salt. The draft specification called for 85%. The average dry density for the upper zone after one compaction pass was about 63% of the in-situ density of salt. At 3 feet, 5 feet and 7 feet from the back, the average dry density of the upper zone was about 63%, 64% and 62% respectively. The draft specification called for 80% for the lower portion of the upper zone and 70% for the upper portion of the upper zone.

A crew of two qualified miners was used to construct the lower and upper zones. This crew worked a 10 hour shift, 4 days per week. The lower zone was constructed at a rate of about 181 cubic feet per hour and the upper zone at a rate of 162 cubic feet per hour. These rates do not include equipment down time, time to perform support actives or testing. Accounting for equipment down time and support activities, the projected time to construct both an intake and exhaust WPC with a drift height of 12.5 feet would be about 61 shifts. Moisture/density testing would add an additional 2 to 4 hours per set of tests.

Scenario 2 consisted of ROM salt compacted into two zones, the same as with Scenario 1, but no additional water was added to the ROM salt. The lower zone was constructed with 6 inch thick horizontal lifts and the upper zone was constructed with 12 inch thick diagonal lifts. The lower zone was 4 feet thick and the upper zone was 8.5 feet thick. As with Scenario 1, the thickness of the lower and upper zones were based on the operational clearances required for the equipment used for emplacement and compaction of the ROM salt.

The lower zone of Scenario 2 was constructed using an LHD to place ROM salt for each lift. A skid-steer loader was needed to get a uniform lift thickness of 6 to 8 inches. Equipment operator proficiency improved from Scenario 1 to Scenario 2, but placing the lifts with a consistent and uniform thickness was still challenging. Three different compaction methods were used on the lower lifts; walk-behind roller compactor, LHD with empty bucket and LHD with full bucket. Each method achieved about the same level of compaction.

On the upper zone, the LHD could place ROM salt to within about 18 to 24 inches of the back. The Fletcher with the push-plate attachment was used to push the ROM salt tight to the back. The slope of each lift on the upper zone was about 30 degrees once emplacement and compaction was completed.

The average dry density achieved for the lower zone of Scenario 2 after four or six compaction passes was about 75% of the in-situ density of salt. The draft specification called for 85%. The average dry density for the upper zone of Scenario 2 after one compaction pass was about 63% of the in-situ density of salt. At 3 feet, 5 feet and 7 feet from the back, the average dry density of the upper zone was about 63%, 63% and 62% respectively. The draft specification called for 80% for the lower portion of the upper zone and 70% for the upper portion of the upper zone.

The crew used to construct the lower zone and the upper zone of Scenario 2 consisted of two qualified miners. Construction work was performed on a 10 hour shift, 4 days per week. The lower zone was constructed at a rate of about 283 cubic feet per hour and the upper zone was constructed at a rate of 239 cubic feet per hour. These rates do not include equipment down time and support activities or testing. The construction rates for Scenario 2 are significantly better than those achieved during Scenario 1 and are attributable to an improved equipment operator proficiency placing and compacting the lifts. Accounting for equipment down time and support activities, the projected time to construct both an intake and exhaust WPC with a drift height of 12.5 feet would be about 42 shifts. Moisture/density testing would add an additional 2 to 4 hours per set of tests.

Scenario 3 consisted of ROM salt, with no water added and no compaction, placed and pushed tight to the back. The ROM salt was emplaced with the LHD to a height within 18 to 24 inches of the back. Two to four buckets (7.20 to 14.40 cubic yards) of ROM salt were placed with the LHD, and then the Fletcher with the push-plate attachment was used to push the ROM salt tight to the back. An additional two to three feet of ROM salt was placed on the floor to enable the Fletcher to reach the top of the loosely placed ROM salt and push it tight to the back. One or two passes pushing up the ROM salt was necessary to get it tight to the back. The slope of the lifts after the ROM salt was pushed tight to the back was about 30 degrees.

The average dry density achieved for the loosely placed ROM salt of Scenario 3 was about 67% of the in-situ density of salt. At 3 feet, 5 feet and 8 feet from the back, the average dry density was about 66%, 68% and 66% respectively.

A crew of two qualified miners was used to emplace the ROM salt of Scenario 3. This crew worked a 10 hour shift for 5 days. This zone was constructed at a rate of about 690 cubic feet per hour. This rate does not include equipment down time and support actives or testing. Accounting for equipment down time and support activities, the projected time to construct both an intake and exhaust WPC with a drift height of 12.5 feet would be about 15 shifts. Moisture/density testing would add an additional 2 to 4 hours per set of tests.

Scenario 1 and Scenario 2 produced very similar results. The dry density achieved in both scenarios for the lower zone was about 75% of the in-situ density of salt. Based on the results from Scenario 2, both the walk-behind roller compactor and the LHD achieved the same compaction level. Scenario 1 and Scenario 2 also had similar results for the upper zone with a dry density of about 63% of the in-situ density of salt achieved. Both scenarios did show a slight variation in dry density at 3 feet, 5 feet and 7 feet from the back at 63%, 63% to 64% and 62% respectively.

Scenario 3 was similar to the upper zone on Scenario 1 and Scenario 2 in both construction technique and achievable compaction. The average dry density achieved for Scenario 3 was about 67% of the in-situ density of salt. This is slightly higher than the 63% achieved by Scenario 1 and Scenario 2.

All three scenarios were not able to achieve the proposed compaction specifications. But these scenarios did show what level of compaction can be achieved with the equipment currently available at the WIPP and demonstrated techniques that could be used for the construction of the WPC.

The three scenarios provided an estimate on WPC construction time. The shortest construction time was for Scenario 3, which is the simplest to construct, at about 15 shifts to construct the intake and exhaust drift WPCs. For Scenario 2, the construction time for the WPCs would be about 42 shifts and for Scenario 1 the construction time would be about 61 shifts. The construction of Scenario 1 and 2 are identical except that Scenario 1 adds 1% water by weight to the ROM salt. The Scenario 2 construction time is shorter than that of Scenario 1 primarily due to the improved equipment operator proficiency in placing and compacting both the lower zone and upper zone lifts.

3. LABORATORY TESTING

Laboratory testing was performed by Pettigrew & Associates (Pettigrew), located in Hobbs, New Mexico. Pettigrew is a qualified supplier for Quality Control for the WIPP, accredited by the American Association of State Highway and Transportation Officials (AASHTO), Materials Reference Laboratory (AMRL) and the AASHTO Cement and Concrete Research Laboratory (CCRL).

Sieve analysis, per ASTM C 136, was performed on the ROM salt used for proctor testing and the ROM salt that was used for the construction methods evaluation. The results of these sieve analysis are presented in Appendix A. SA-1 through SA-3 is the sieve analysis data on the material used for the proctor testing. SA-4 is the sieve analysis of the ROM salt used for the field demonstration. Both the proctor test ROM salt and construction ROM salt samples were taken from the same stock pile. When the proctor material was taken, large chunks were avoided. Whereas, the construction sample consisted of whatever size material was in the sample location. Of the construction ROM salt, 9% of the material was greater than 3 inches in size, of which occasionally pieces were up to 7 to 9 inches in size. Of the finer material, only 7% passed the #80 screen and only 3.1% passed the #200 screen.

Moisture of the ROM salt was determined by ASTM D 2216 and averaged 0.36% with a high of 0.9% and a low approaching 0%.

Standard Proctor evaluations were performed in accordance with ASTM D-1557. The Proctor evaluation was used to determine the optimal moisture to achieve the maximum density. The moisture added during the performance of the evaluation was in the form of fresh water as opposed to brine because fresh water would also be used in the field assessment. Larger material that was inappropriate for the proctor mold size used was screened off prior to placement of material into the molds.

Two proctor evaluations were run using 6 inch molds and one evaluation using the 4 inch mold. Excess water bled from both the 4 inch and 6 inch molds once the moisture content was over 3%. A best-fit curve was generated from the data to determine the optimum moisture and maximum density. The maximum density for the 6 inch mold evaluations was between 108 to 109 pounds per cubic foot (80% to 81% of the density of in-situ salt). The optimum moisture varied significantly from about 2.5% and to about 4.5%. The evaluation, using the 4 inch mold, produced a maximum density of about 107 pounds per cubic foot (79% of the density of in-situ salt) with optimum moisture of about 6%. Appendix A contains a graph summarizing the proctor evaluations.

The optimum moistures produced by the proctor evaluations were not used in the field testing. Scenario 1 of the field testing called for the addition of 1% water to the ROM salt. This would give total moisture of between 1.25% and 1.5%. This is more in line with the plans for the WIPP shaft seals (SAND96-1326/1).

Moisture/density testing by the nuclear method is not common in salt. A small ROM salt pad was constructed near the test area to determine if the nuclear method would provide adequate results. The nuclear method results were compared to sand-cone and balloon density methods and standard moisture sampling. Technical problems were experienced with the sand-cone and balloon density methods. Only one sand-cone could be taken and no valid balloon tests were achieved. Several nuclear moisture/density tests were made after a trench calibration of the instrument was made. As anticipated, the nuclear method did not accurately determine moisture content. The nuclear density results were in good agreement with the sand-cone density determination. For the field moisture/density testing, the nuclear method was used for density and occasional sand-cone density tests were performed as a check. Table 1 in Appendix D-1 compares the density results by the nuclear and sand cone methods for scenario 1. Samples were collected at or near where the density tests were made to determine moisture content in the lab. Data from this testing can be found in Appendix A, Test No. SG 1 through SG 12 and SC 1.

Four nuclear density tests were made at the stock pile of ROM salt used to construct the lower and upper lifts. These tests were made to determine the density of the stock pile at different time periods and are reported as a percentage of the in-situ density of salt. Test SG 58 was at a portion of the stock pile that had been undisturbed for about two months; SG 59 was at a portion that was added to the stock pile four days earlier; and SG166 and SG167 were in ROM salt placed on the stock pile within an hour of the testing. Test SG 58 in the older portion of the stockpile showed a density of 71.9%. Test SG 59 in the newer portion of the stockpile showed a density of 68.1%. Test SG 166 and SG 167 in the youngest portion of the stockpile showed densities of 64% and 63% respectively. These tests seem to indicate that settling or self compaction of the stockpile occurs rapidly. The loose density of ROM salt is about 65%. The test data for SG 58, SG 59, SG 166 and SG 167 can be found in Appendix A. Note that the densities for SG 58 and 59 are not corrected for moisture, whereas the densities for SG 166 and 167 are corrected for moisture.

4. FIELD TESTING

4.1. LOCATION

The field testing was conducted in the southern portion of the WIPP underground adjacent to Panel 5 in the W-30 drift, between S-3310 and S-3650 and south of Bulkhead 506. Bulkhead 506 was used to simulate the bulkhead portion of the proposed WPC. The drift width was about 16 feet wide and the height was about 12.5 feet. The length of drift available for testing was about 230 feet.

4.2. EQUIPMENT

The following list of equipment was used in the field testing.

- Load-haul-dump (LHD) with 3.6 cubic yard bucket capacity
- Skid-steer loader
- Fletcher Scaler (modified with a push plate attachment)
- Walk-behind steel wheel vibratory roller compactor
- 500-gallon water tank
- Electric water pump
- 1 inch dia. Water hose
- Adjustable water nozzle
- Auxiliary Fan
- 30 inch dia. ventilation tubing

The LHD was the primary piece of equipment used to place ROM salt for the lifts for the lower zone and upper zone. The skid-steer loader was used to work the lower zone lifts to the desired thickness. Water was added to the ROM salt using the 500-gallon tank, water pump, hose and adjustable nozzle. The nozzle was adjusted to maintain a consistent flow rate of 20 gallons per minute. This rate also provided a good spray pattern. Compaction of the lifts of the lower zone was accomplished using a walk-behind steel wheel roller compactor or LHD. Information on the roller compactor, the LHD, and the Fletcher scaler can be found in Appendix G. On the upper zone, a push-plate attachment on the Fletcher scaler, was used to push the ROM salt tight to the back and to compact the material. The push-plate was fabricated in-house using 1 inch plate steel, 4 inch steel channel and 4 inch steel tubing and had a height and width of 2 feet. The auxiliary fan and ventilation tubing was set up in an exhausting configuration to provide fresh air and remove diesel smoke and dust from the work area.

4.3. SCENARIO 1

The test parameters for Scenario 1 were as follow. One percent water (by weight) was added to the ROM salt. Compaction of the lower zone was by the walk-behind roller compactor and compaction of the upper zone was by the Fletcher with the push-plate.

Figure 1 shows the configuration of the test area. The lower zone was approximately 63 feet in length, 16 feet wide and 4 feet thick. A 2:1 slope was constructed for the lower zone on the end near the bulkhead. The upper zone was comprised of two areas. Towards the bulkhead, un-compacted ROM salt with no water added was placed to provide a "back-stop" for the ROM salt that would be placed and compacted for the remainder of the upper zone. The compacted portion of the upper zone was approximately 32 feet in length, 16 feet wide and 8.5 feet high. The slope angle on the upper zone was about 30 degrees after compaction of each lift.

4.3.1. LOWER ZONE

The lower zone was constructed using the LHD to place ROM salt in horizontal lifts of about 6 inches thick. The LHD that was used had a capacity of 3.6 cubic yards of ROM salt per bucket and six buckets were required to get the lift thickness of 6 inches. The LHD could not provide an adequately uniform lift thickness, so the skid-steer loader was used to even out the lifts. After placement, compaction and testing of the second lift, a change was made to improve the water distribution through the thickness of the lift. Instead of the full six inches of ROM salt being placed, placement of the lift was split in two. About 3 inches of ROM salt would be placed, water added, another 3 inches placed and the final water added to the lift. It was a little easier for both the LHD and skid-steer loader to spread and evenly distribute the ROM salt in the thinner layers. Figure 2 shows the LHD placing ROM salt on a lower zone lift. Placement of each lift was challenging for the equipment operator and time consuming. The placement of each lift took an average of 2 hours and 12 minutes.

One percent water was added to the lifts either after the lift was placed or halfway through the placement. Based on the loose density of the ROM salt at 88 pounds per cubic foot, 2.85 gallons of water must be added per cubic yard to get 1% water added. For the six LHD buckets placed each lift, about 62 gallons of water would be required to get 1% added moisture. An adjustable nozzle was set to deliver 20 gallons per minute. The volume delivered by the nozzle was initially set and periodically checked by recording the time to fill a container of known volume. Water was added to each lift uniformly with the nozzle and timed to get the necessary volume. The time necessary to add water was about 3 minutes per lift. Moisture sample results are presented for the lower zone in Appendix B-1, Appendix D-1, and Appendix F-1. The average moisture for the compacted samples taken on the lower zone was 1.4%. The moisture content for ROM salt ranges from 0.25% to about 0.5%.

Most of the moisture results were similar, but the results of the last lift of the lower zone were significantly lower. This is likely because the last lift was completed on a Friday afternoon and moisture/density testing was not performed until the next Monday. The moisture content for these tests was much lower than the previous tests perhaps due to the ventilation passing through the test area causing the water to evaporate. The moisture for lift 7 averaged 0.3% which is within the natural range.

A walk-behind steel wheel vibratory roller compactor was used to compact the lifts of the lower zone. Specifications and data on the compactor are contained in Appendix G. Six compaction passes were made on each lift with moisture/density testing after two, four and six passes. The compaction passes were started at one rib and the compactor was run the length of the lift and back in the same path then shifted a half drum width and run the length and back again. This sequence was repeated until the opposite rib was reached. Figure 3 shows the roller compactor in use on a lift. Each set of two compaction passes averaged about 17 minutes and a set of six averaged about 51 minutes.

The time to place, add water and compact a single lift averaged about 3 hours and 5 minutes.

Field testing of the lower zone was performed in accordance with ASTM standards for nuclear methods (ASTM D-6938) and for the sand-cone method (ASTM D-1556). Four density tests were made using the nuclear method. Generally, two tests were made along the centerline of the drift and two tests were made between the centerline of the drift and the rib. All four tests were performed in the middle third of the lift's length. One to four moisture samples were taken at locations near the nuclear tests. The nuclear method results were not used for moisture content determination. Sand-cone tests were performed periodically as checks to the nuclear tests. The densities by the nuclear method and by sand-cone were in general agreement.

Information on placement, compaction and moisture/density testing on the lower zone, is contained in Appendix B-1, Appendix D-1, and Appendix F-1. Table 1 summarizes the results from the lower zone.

Table 1 - Scenario 1 Lower Zone Moisture/Density

Average Compactor Speed (ft/min)	Cumulative Number of Compaction Passes	Moisture %	Dry Density%*
132	2	1.6	74.1
141	4	1.7	74.5
148	6	1.4	74.8

* Density reported as a percentage of the in-situ density of salt

The results show that the average achievable dry density on the lower zone was 74.8% after six compaction passes. The density does increase slightly as the number of compaction passes increases. The results also indicated that dividing the lift height in two and adding water to each half did not improve the compaction of the lifts. The actual densities achieved for the lower zone were significantly less than the proposed value of 85% of the in-situ density of salt.

A moisture/density test (SG 78) was made on the last lift of the lower zone 25 days after the initial tests were performed. The test results were a density of 80.5% of the in-situ density of salt with moisture of 0.2%. The original density averaged 73.8% with moisture of 0.3%. The increase in density could be due to the combination of the operation of heavy equipment on the lift during the construction of the upper zone and settling of the material.

The height of the lower zone was determined by the operational clearance needed for the LHD. The height of the LHD to the top of the cab is about 7.5 feet, so an operational clearance of 8.5 feet was maintained. The available operational clearance set the upper zone to 8.5 feet high and the lower zone to the difference from the total drift height. The height of the drift in the test area was 12.5 feet. In order to maintain the operational clearance, the thickness of the lower zone was about 4 feet.

4.3.2. UPPER ZONE

The upper zone was constructed using the LHD to place ROM salt, the Fletcher, with the push-plate, was used to push the ROM salt tight to the back and compact the material. Initially several feet of un-compacted ROM salt was placed tight to the back to provide a back-stop for the compacted lifts. The lifts of the upper zone were placed on a slope of about 30 degrees. This slope was the result of pushing the ROM salt tight to the back to create the back-stop. The LHD placed two buckets per lift. This resulted in a lift thickness of about 12 inches. The LHD could place the material to within about 18 to 24 inches of the back. An average of about 13 minutes was needed to place the ROM salt on each lift.

Once the ROM salt was placed but not pushed up and compacted, water was added using the nozzle set to a volume of 20 gallons per minute. Two LHD buckets (7.2 cubic yards) required one minute of water to be added. The average moisture for the upper zone was about 1.3%. Pushing the ROM salt tight to the back and compacting the material tended to mix the water into the lift, but dry or very wet areas were common.

The Fletcher with the push-plate, was used to push the ROM salt tight to the back usually starting along the left rib and working to the right. Compaction of the upper zone lifts usually started in the upper left hand corner and worked across to the opposite rib by moving the plate about a foot, half of the plate width, each time. When the opposite rib was reached the plate would be moved back to the left rib and down about a foot and worked to the opposite rib. This cycle was followed until the bottom of the lift was compacted. Figure 4 shows the push-plate attachment for the Fletcher and Figure 5 shows the compaction on a lift of the upper zone.

Two methods of compaction were tried on the upper zone. The modified Fletcher had the push-plate attached to the jack-hammer head of the machine. By activating the jack-hammer, the push-plate could be vibrated like a plate compactor. For the first method, the boom was used to push the material tight and maintain pressure as the jack-hammer was activated for 5 seconds to vibrate the push-plate. This method was used for lifts 1 through 7 of the upper lift. The method was discontinued because the vibration from the jack-hammer caused the adjacent ROM salt to loosen and slide down the slope. The remaining lifts were completed using only the Fletcher's boom extension to push the push-plate into the slope.

Pushing up and compacting the lifts of the upper zone with the jack-hammer action averaged about 76 minutes per lift. Pushing up and compacting the lifts of the upper zone by just pushing into the slope averaged about 53 minutes per lift. Originally two and three compaction passes per lift were planned. However, spending 2 to 3 hours compacting each lift was not operationally practical; thus, the additional compaction passes were not preformed.

Field testing of the upper zone was performed in accordance with ASTM standards for nuclear methods (ASTM D-6938) and for the sand-cone method (ASTM D-1556). Six density tests were made using the nuclear method. Generally two tests were made about 3 feet down from the back of the drift, two tests were made about 5 feet down from the back and two tests were made about 7 feet down from the back. The nuclear density tests varied from a few feet from the ribs to near the centerline of the drift. Moisture samples were taken at each nuclear density test. The nuclear method results were not used for moisture content determination. Sand-cone tests were taken periodically as checks to the nuclear tests. The densities achieved by the nuclear method and by sand-cone were in general agreement.

Appendix C-1, Appendix E-1 and Appendix F-1 contain information on placement, compaction and testing of the upper zone. The average dry density achieved using the push plate with vibration was 63.3% of the in-situ density of salt. The average dry density achieved by just pushing the material was 64.6% for lifts 13 through 19 but the average dropped to 63.3% by lift 32.

Table 2 and Table 3 summarize the results of the upper zone.

Table 2 - Scenario 1 Upper Zone Moisture/Density

Compaction Type	Number of Compaction passes	Moisture %	Dry Density %*
Push-plate with 5 seconds Vibration	1	1.1	63.3
Push Plate	1	1.4	63.3

* Density reported as a percentage of the in-situ density of salt

Table 3 - Scenario 1 Moisture/Density by Position in the Upper Zone

Distance from Back of Drift	Moisture %	Dry Density %*
3 feet	1.2	63.4
5 feet	1.3	64.6
7 feet	1.4	61.5

* Density reported as a percentage of the in-situ density of salt

The results show that the average achievable dry density on the upper zone is 63.3% after one compaction pass whether or not the vibration was activated. The dry density does vary by the position in the upper zone. The middle has the highest density at 64.6% and surprisingly the lowest is close to the bottom of the zone at 61.5%. Close to the back the average was 63.4%. The proposed design called for 80% density in the lower half of the upper zone and 70% in the upper half of the upper zone. The actual average density achieved did not meet the proposed density.

4.3.3. CONSTRUCTION TIME

The crew used to construct the lower zone and the upper zone consisted of two qualified miners. Construction work was performed on a 10 hour shift, 4 days per week. As part of the construction methods assessment, each process to construct the lower and upper zones was documented and the data collected can be found in Appendix F. Excluding down time, the time necessary to place, wet, and compact each lift of the lower zone averaged about 3 hours and 5 minutes. This equates to about 181 cubic feet of lift constructed per hour. Excluding down time, the time necessary to place, wet, and compact each lift of the upper zone averaged about 1 hour and 12 minutes. This equates to about 162 cubic feet of lift constructed per hour. In a 10 hour shift, about 6.5 hours of work can be performed. About 80% or 5.2 hours per shift could be expected to be worked accounting for equipment down time and support work. Assuming the 5.2 hours per shift and the rates determined above, the time necessary to construct a WPC in an intake drift, that is 12.5 feet high and 20 feet wide, would be about 36 shifts and in an exhaust drift, that is 12.5 feet high and 14 feet wide, would be about 25 shifts. The preceding construction time estimate does not include time necessary for moisture/density testing. For each set of tests, an additional 2 to 4 hours should be added to the total construction time.

4.4. SCENARIO 2

The test parameters for Scenario 2 were as follows. No water was added to the ROM salt. Six lifts of the lower zone were compacted by the walk-behind roller compactor and four lifts of the lower zone were compacted by the LHD. The lifts of the upper zone were compacted using the Fletcher with the push-plate attachment.

Figure 1 shows the configuration of Scenario 2 in relation to the other two scenario test areas. The lower zone was approximately 33 feet in length, 16 feet wide and 4 feet thick. The upper zone was approximately 39 feet in length, 16 feet wide and 8.5 feet high. The slope angle on the upper zone was about 30 degrees after compaction of each lift.

4.4.1. LOWER ZONE

The ramp that was constructed to aid in the placement and compaction of the Scenario 1 ROM salt was removed prior to placement of the Scenario 2 lower lifts. The lower lifts were constructed using the LHD to place the ROM salt in horizontal lifts of about 6 inches thick. The LHD used had a capacity of 3.6 cubic yards of ROM salt per bucket and three buckets were required to get the lift thickness of 6 inches. As with Scenario 1, the LHD could not provide an adequately uniform lift thickness, so the skid-steer loader was used to even out the lifts. The placement of each lift took an average of 38 minutes. The placement of the lower lifts for

Scenario 2 took less time than in Scenario 1 because the length of the lower lift for Scenario 2 is about half that of Scenario 1, no water was added and operator proficiency was improved.

A walk-behind steel wheel vibratory roller compactor was used to compact the first six lifts of the lower zone. The compactor used was the same one used for Scenario 1 and the data on the compactor are contained in Appendix G. The last four lifts of the lower zone were compacted using the LHD. The LHD bucket was empty during compaction of two lifts and full during compaction of two lifts. The full LHD bucket adds about 4.3 tons to the weight of the LHD. Using either the compactor or LHD, six compaction passes were made on each lift. The compaction passes were started at one rib and the compactor/LHD was run the length of the lift and back in the same path then shifted about one foot and run the length and back again. This sequence was repeated until the opposite rib was reached. Each set of two compaction passes averaged about 8 minutes and a set of six averaged about 25 minutes. Using either the walk-behind roller compactor or the LHD, the compaction times were comparable. The compaction times are less for Scenario 2, because the length of the lift is about half that of Scenario 1.

Moisture/density testing was performed on selected lifts after two, four and six compaction passes. Density testing of the lower zone was performed in accordance with ASTM standard for nuclear methods (ASTM D-6938). The sand-cone method for determining density could not be used because the walls of the hole dug for the sand-cone test would collapse under the base plate. Four density tests were made after each set of two compaction passes. Generally, two tests were made along the centerline of the drift and two were made between the centerline of the drift and the rib. All four tests were performed on the middle third of the lifts length. Moisture samples were taken per ASTM D-2216 near the location of each of the density tests. The nuclear method results were not used for moisture content determination.

Information on placement, compaction and moisture/density testing on the lower zone, is contained in Appendix B-2, Appendix D-2 and Appendix F-2. Table 4 summarizes the results from the lower zone.

Table 4 - Scenario 2 Lower Zone Moisture/Density

Roller Compactor			
Average Compactor Speed (ft/min)	Cumulative Number of Compaction Passes	Moisture %	Dry Density%*
98.0	2	0.4	74.6
73.5	4	0.4	75.5
100.2	6	0.4	74.7
LHD - Empty Bucket			
Average Compactor Speed (ft/min)	Cumulative Number of Compaction Passes	Moisture %	Dry Density%*
93.5	2	0.1	73.8
93.5	4	0.0	73.0
83.1	6	0.3	74.9
LHD – full bucket			
Average Compactor Speed (ft/min)	Cumulative Number of Compaction Passes	Moisture %	Dry Density%*
95.0	2	0.4	72.5
83.1	4	0.4	75.0
95.0	6	0.4	75.3

* Density reported as a percentage of the in-situ density of salt

The results show that using either the roller compactor or LHD with loaded bucket, the achievable dry density was about 75% after four compaction passes. After six compaction passes, the LHD with an empty bucket was able to achieve an average dry density of just under 75%. The actual densities achieved for the lower zone were significantly less than the proposed value of 85%.

The average compactor speed is lower in Scenario 2 than in Scenario 1. This is likely attributable to the shorter length of the Scenario 2 lifts. The proportion of time repositioning the compactor is greater relative to the time to travel the length of the lift.

The height of the lower zone was determined by the operational clearance needed for the LHD. The height of the LHD to the top of the cab is about 7.5 feet, so an operational clearance of 8.5 feet was maintained. The available operational clearance set the upper zone to 8.5 feet high and the lower zone to the difference from the total drift height. The height of the drift in the test area was 12.5 feet. In order to maintain the operational clearance, the thickness of the lower zone was about 4 feet.

4.4.2. UPPER ZONE

The upper zone was constructed using the LHD to place ROM salt, the Fletcher, with the push-plate attachment, was used to push the ROM salt tight to the back and compact the material. The upper zone of Scenario I was used as the back-stop for the upper zone of Scenario 2. The lifts of the upper zone were placed on a slope of about 30 degrees. This slope matches that of the upper zone of Scenario 1. The LHD placed two buckets per lift. This resulted in a lift thickness of about 12 inches. The LHD could place the material to within about 18 to 24 inches of the back. An average of about 13 minutes was needed to place the ROM salt on each lift. This time is similar to that of Scenarios 1 and the upper zone dimensions for both scenarios are similar.

The Fletcher with the push-plate was used to push the ROM salt tight to the back usually starting along the left rib and working to the right. Compaction of the upper zone lifts usually started in the upper left hand corner and worked across to the opposite rib by moving the plate about a foot, half of the plate width, each time. When the opposite rib was reached the plate would be moved back to the left rib and down about a foot and worked to the opposite rib. This cycle was followed until the bottom of the lift was compacted. Figure 4 shows the push-plate attachment for the Fletcher and Figure 5 shows the compaction of a lift of the upper zone.

The upper zone lifts were compacted using the Fletcher's boom extension to push the push-plate into the slope. The push plate was not vibrated during compaction because of the adverse effects it had on the compaction of the Scenario 1 upper zone lifts.

Pushing up and compacting the lifts of the upper zone averaged about 43 minutes. Improved operator proficiency reduced the average compaction time in Scenario 2 from that of Scenario 1. Only one compaction pass was performed per lift. Additional compaction passes would not be operationally practical due to the time necessary to perform each pass.

Moisture/density testing was performed in accordance with ASTM standards for nuclear methods (ASTM D-6938). As with the lower zone, the sand-cone method for determining density could not be used because the walls of the test hole would collapse under the base plate. Six density tests were made on selected lifts. Generally two tests were made about 3 feet down from the back of the drift, two tests were made about 5 feet down from the back and

two tests were made about 7 feet down from the back. The nuclear density tests varied from a few feet from the ribs to near the drift centerline. Moisture samples were taken in accordance with ASTM D-2216 at each nuclear density test. The nuclear method results were not used for moisture content determination.

Appendix C-2, Appendix E-2 and Appendix F-2 contain information on placement, compaction and testing of the upper zone. The average dry density achieved was 62.5% of the in-situ density of salt.

Table 5 summarizes the results of the Scenario 2 upper zone.

Table 5 - Scenario 2 Upper Zone Moisture/Density

	Moisture %	Dry Density %*
Upper Zone Lifts Average	0.4	62.5
Distance from Back of Drift	Moisture %	Dry Density %*
3 feet	0.4	62.9
5 feet	0.5	63.1
7 feet	0.3	61.5

* Density reported as a percentage of the in-situ density of salt

The results show that the average achievable dry density on the upper zone is about 62.5% after one compaction pass. The dry density does vary by the position in the upper zone. The middle has the highest density at 63.1%. The lowest density is near the bottom of the zone at 61.5%. Close to the back the average was 62.9%. The proposed design called for 80% density in the lower half of the upper zone and 70% in the upper half of the upper zone. The actual average density achieved did not meet the proposed density.

4.4.3. CONSTRUCTION TIME

The crew used to construct the lower zone and the upper zone of Scenario 2 consisted of two qualified miners. Construction work was performed on a 10 hour shift, 4 days per week. As part of the construction methods assessment, each process to construct the lower and upper zones was documented and the data collected can be found in Appendix F-2. Excluding down time, the time necessary to place and compact each lift of the lower zone averaged about 1

hour and 2 minutes. This equates to about 283 cubic feet of lift constructed per hour. Excluding down time, the time necessary to place and compact each lift of the upper zone averaged about 49 minutes. This equates to about 239 cubic feet of lift constructed per hour. In a 10 hour shift, about 6.5 hours of work can be performed. About 80% or 5.2 hours per shift could be expected to be worked accounting for equipment down time and support work. Assuming the 5.2 hours per shift and the rates determined above, the time necessary to construct a WPC in an intake drift, that is 12.5 feet high and 20 feet wide, would be about 24 shifts and in an exhaust drift, that is 12.5 feet high and 14 feet wide, would be about 18 shifts. The preceding construction time estimate does not include time necessary for moisture/density testing. For each set of tests, an additional 2 to 4 hours should be added to the total construction time.

4.5. SCENARIO 3

The test parameters for Scenario 3 were as follow. An LHD was used to emplace ROM salt and the Fletcher with the push-plate attachment was used to push the ROM salt tight to the back.

Figure 1 shows the configuration of the test area and the relation to the other two scenarios. The zone was approximately 44 feet in length, 16 feet wide and 12.5 feet high. The upper (back) portion of the zone was approximately 37 feet in length, 16 feet wide and 12.5 feet high. The slope angle on the zone was about 35 degrees after each lift was pushed tight to the back.

4.5.1. ROM SALT PLACEMENT

An LHD was used to emplace buckets of ROM salt as high as possible. A typically lift was constructed with the LHD placing four buckets of ROM salt and then pushing the ROM salt to within 18 to 24 inches of the back. The LHD that was used had a bucket capacity of 3.6 cubic yards. After the LHD had placed the ROM salt for each lift, the Fletcher with the push-plate attachment was use to push the ROM salt tight to the back. But it was apparent after the first buckets were emplaced that the Fletcher could not effectively reach the back from the original floor. To reduce the distance the Fletcher had to reach the back, two to three feet of ROM salt was placed to build up the floor. Initially seven buckets were placed on the floor and later two to four buckets were emplaced as needed to allow the Fletcher to maintain the height needed to reach the back.

The Fletcher was used to push the ROM salt tight to the back usually starting along the left rib and working to the right. Most of the time this was done with one pass across the face. If the slope became steeper, then two passes were made to keep the salt from sliding down the slope. The placement of each lift took an average of 30 minutes.

Field testing of the zone was performed in accordance with ASTM standards for nuclear methods (ASTM D-6938). Six density tests were made using the nuclear method. Generally two tests were made about 3 feet down from the back of the drift, two tests were made about 5 feet down from the back and two tests were made about 8 feet down from the back. The nuclear density tests varied from a few feet from the ribs to near the drift centerline. Moisture samples were taken at each nuclear density test. The nuclear method results were not used for moisture content determination. The sand-cone method for determining density could not be used because the walls of the hole dug for the sand-cone test would collapse under the base plate.

Information on placement and moisture/density testing on the zone is contained in Appendix C-3, Appendix E-3 and Appendix F-3. Table 6 summarizes the results from the Scenario 3 lifts.

Table 6 - Scenario 3 Moisture/Density by Position in the Lift

Distance from Back of Drift	Moisture %	Dry Density %*
3 feet	0.5	66.5
5 feet	0.4	68.0
8 feet	0.4	66.0

* Density reported as a percentage of the in-situ density of salt

The results show that the average achievable dry density was 66.8%. The dry density does vary by the position on the lift. The middle has the highest density at 68.0% and surprisingly the lowest is close to the bottom of the zone at 66.0%. Close to the back the average was 66.5%.

4.5.2. CONSTRUCTION TIME

The crew, used to construct the lower zone and the upper zone, consisted of two qualified miners. Construction work was performed on a 10 hour shift for five days. As part of the construction methods assessment, each construction process was documented and the data collected can be found in Appendix F-3. The time necessary to emplace and push up each lift of the zone averaged 30 minutes. This equates to about 690 cubic feet of lift constructed per hour. In a 10 hour shift, about 6.5 hours are available for work to be performed. About 80% of the available time, or 5.2 hours per shift, could be expected to be used for actual work. This would account for equipment down time and support work. Assuming the 5.2 hours per shift and the rate determined above, the time necessary to construct a WPC in an intake drift, that is 12.5 feet high and 20 feet wide, would be about 9 shifts. The time necessary to construct a WPC in the exhaust drift, that is 12.5 feet high and 14 feet wide, would be about 6 shifts. This time

estimate does not include time necessary to perform moisture/density testing. For each set of tests, an additional 2 to 4 hours should be added to the total construction time.

5. REFERENCES

1. U.S. Department of Energy, Waste Isolation Pilot Plant, Underground Facilities and Equipment, System Design Description, SDD AU00.
2. Waste Isolation Pilot Plant Shaft Sealing System Compliance Submittal Design Report, SAND96-1326/1.
3. U.S. Department of Energy, Waste Isolation Pilot Plant, Work Order Number 1202108C, Compacted Salt Evaluation.
4. U.S. Department of Energy, Waste Isolation Pilot Plant, Construction Methods Assessment for Compacted Salt Panel Closures Interim Report for Scenario 1 Testing.

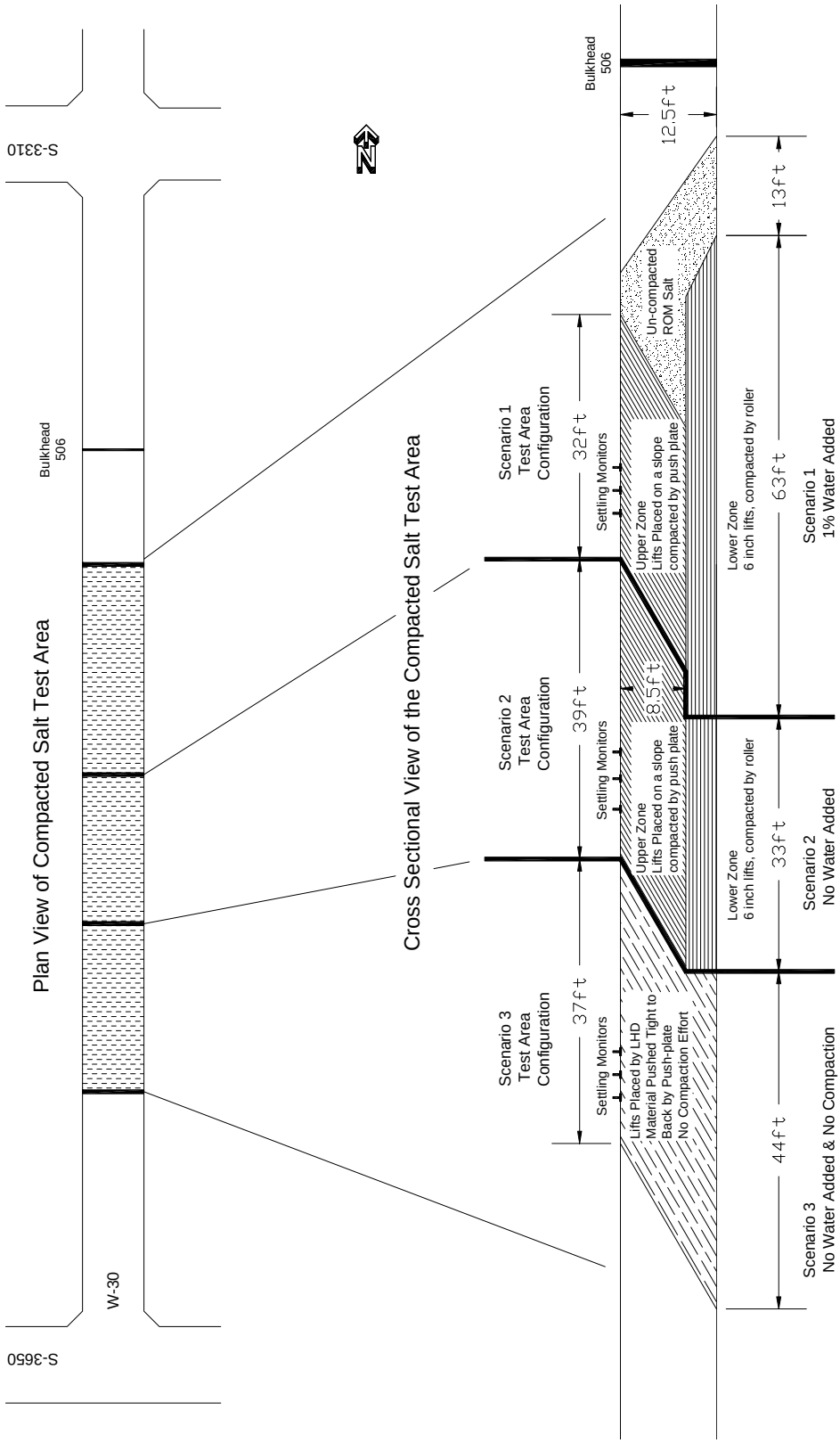

Figure 1 – Compacted Salt Test Area Plan and Cross Section

Figure 2 - LHD Placing ROM Salt on Lower Zone Lift

Figure 3 - Walk-behind Roller Compactor Compacting Lower Zone Lift

Figure 4 - Fletcher with Push-Plate Attachment

Figure 5 - Fletcher Compacting Upper Zone

APPENDIX A

Appendix A Contains The Following;

1. Laboratory Test Reports for the Nuclear Density Testing and Sand-Cone Testing Performed Prior To The Actual Field Testing
2. Laboratory Test Reports For the Sieve Analysis Performed On The ROM Salt Used For The Proctor Evaluation And On The ROM Salt Used For The Field Testing
3. Proctor Evaluation Data

LABORATORY TEST REPORT

PETTIGREW & ASSOCIATES, P.A.

1110 N. GRIMES
HOBBS, NM 88240
(575) 393-9827

AASHTO R18

DEBRA P. HICKS, P.E./L.S.I.
WILLIAM M. HICKS. III, P.E./P.S.

To: Washington TRU Solutions, LLC
4021 NATIONAL PARKS HIGHWAY
P. O. BOX 2078
Carlsbad, NM 8822

Material: ROM Salt

Test Method: ASTM: D 6938

Project: Lab and Field Testing Services for Compacted Salt Testing
Project No. 2012.1112

Date of Test: June 5, 2012

Depth: See Below

Depth of Probe: See Below

Test No.	Location	Dry Density % Max	% Moisture	Depth
SG 1	On W. 30 Drift 80' S. of Bulkhead and 5' W. of E.Wall	74.7 *	1.2	1st Lift Probe Depth 6"
SG 2	On W. 30 Drift 70' S. of Bulkhead and 5' W. of E.Wall	74.8 *	1.5	1st Lift Probe Depth 6"
SG 3	On W. 30 Drift 70' S. of Bulkhead and 10' W. of E. Wall	74.7 *	2.3	1st Lift Probe Depth 4"
SG 4	On W. 30 Drift 80' S. of Bulkhead and 10' W. of E.Wall	75.0 *	1.6	1st Lift Probe Depth 4"
SG 5	On W. 30 Drift 80' S. of Bulkhead and 6' W. of E.Wall	74.4 *	2.4	1st Lift Probe Depth 6"
SG 6	On W. 30 Drift 70' S. of Bulkhead and 6' W. of E. Wall	76.6 *	1.4	1st Lift Probe Depth 6"

Control Density: 135.0
ASTM D 1557

Optimum Moisture: 0.0%
STD/STAT Trench Correction 21.6

Required Compaction: 85%

Densometer ID: 5071

*** Does Not Meet Specifications**

PETTIGREW & ASSOCIATES

BY: Erigam Hart

Lab No.: 12 10870-10875

BY: for Debra Hicks **P.E.**

Copies To: Washington TRU Solutions, LLC

LABORATORY TEST REPORT

PETTIGREW & ASSOCIATES, P.A.

1110 N. GRIMES
HOBBS, NM 88240
(575) 393-9827

AASHTO R18

DEBRA P. HICKS, P.E./L.S.I.
WILLIAM M. HICKS. III, P.E./P.S.

To: Washington TRU Solutions, LLC
4021 NATIONAL PARKS HIGHWAY
P. O. BOX 2078
Carlsbad, NM 8822

Material: ROM Salt

Test Method: ASTM: D 6938

Project: Lab and Field Testing Services for Compacted Salt Testing
Project No. 2012.1112

Date of Test: June 5, 2012

Depth: See Below

Depth of Probe: See Below

Test No.	Location	Dry Density % Max	% Moisture	Depth
SG 7	On W. 30 Drift 70' S. of Bulkhead and 10' W. of E.Wall	75.8 *	2.0	1st Lift Probe Depth 4"
SG 8	On W. 30 Drift 80' S. of Bulkhead and 10' W. of E.Wall	75.6 *	2.3	1st Lift Probe Depth 5"
SG 9	On W. 30 Drift 80' S. of Bulkhead and 5' W. of E.Wall	75.9 *	1.7	1st Lift Probe Depth 5"
SG 10	On W. 30' Drift 70' S. of Bulkhead and 5' W. of E.Wall	76.3 *	1.5	1st Lift Probe Depth 6"
SG 11	On W. 30' Drift 70' S. of Bulkhead and 10' W. of E.Wall	76.7 *	2.2	1st Lift Probe Depth 4"
SG 12	On W. 30 Drift 80' S. of Bulkhead and 10' W. of E.Wall	75.6 *	2.1	1st Lift Probe Depth 4"

Control Density: 135.0
ASTM D 1557

Optimum Moisture: 0.0%
STD/STAT Trench Corrections 21.6

Required Compaction: 85%

Densometer ID: 5071

*** Does Not Meet Specifications**

PETTIGREW & ASSOCIATES

BY: Erica M Hart

BY: for Debra Hicks P.E.

Lab No.: 12 10876-10882

Copies To: Washington TRU Solutions, LLC

LABORATORY TEST REPORT

PETTIGREW & ASSOCIATES, P.A.

1110 N. GRIMES
HOBBS, NM 88240
(575) 393-9827

AASHTO R18

DEBRA P. HICKS, P.E./L.S.I.
WILLIAM M. HICKS. III, P.E./P.S.

To: Washington TRU Solutions, LLC
4021 NATIONAL PARKS HIGHWAY
P. O. BOX 2078
Carlsbad, NM 8822

Material: ROM Salt

Test Method: ASTM: D 6938

Project: Lab and Field Testing Services for Compacted Salt Testing
Project No. 2012.1112

Date of Test: June 26, 2012

Depth: See Below

Depth of Probe: 6"

Test No.	Location	Dry Density % Max	% Moisture	Depth
SG 58	Old Salt Pile Not part of Closure	71.9 *	0.0	N/A
SG 59	New Salt Pile Not part of Closure	68.1 *	-0.1	N/A

Control Density: 135.0
ASTM D 1557

Optimum Moisture: 0.0%
STD/STAT Trench Corrections -9.7

Required Compaction: 80%

Densometer ID: 5071

*** Does Not Meet Specifications; NO MOISTURE CORRECTION APPLIED.**

PETTIGREW & ASSOCIATES

BY: Erica M Hart

Lab No.: 12 11877-11880

BY: for Debra Hicks **P.E.**

Copies To: Washington TRU Solutions, LLC

LABORATORY TEST REPORT

PETTIGREW & ASSOCIATES, P.A.

100 E. Navajo Drive, Suite 100
HOBBS, NM 88240
(575) 393-9827

AASHTO R18

DEBRA P. HICKS, P.E./L.S.I.
WILLIAM M. HICKS. III, P.E./P.S.

To: Washington TRU Solutions, LLC
4021 NATIONAL PARKS HIGHWAY
P. O. BOX 2078
Carlsbad, NM 8822

Material: ROM Salt

Test Method: ASTM: D 6938

Project: Lab and Field Testing Services for Compacted Salt Testing
Project No. 2012.1112

Date of Test: September 5, 2012

Depth: See Below

Depth of Probe: 6"

Test No.	Location	Dry Density % Max	% Moisture	Depth
SG 166	On Drift W-30 Stockpile on E. 140 N.Side	64.0 *	0.6	3rd Region
SG 167	On Drift W-30 Stockpile on E. 140 on S.Side	62.5 *	0.5	3rd Region

Control Density: 135.0
ASTM D: 1557

Optimum Moisture: 0.0%

Required Compaction: 70-80%

Densometer ID: 5071

*** Does Not Meet Specifications**

PETTIGREW & ASSOCIATES

BY: Erika Stat

BY: for Debra Hicks **P.E.**

Lab No.: 12 15893-15895

Copies To: Washington TRU Solutions, LLC

LABORATORY TEST REPORT

PETTIGREW & ASSOCIATES, P.A.

1110 N. GRIMES
HOBBS, NM 88240
(575) 393-9827

AASHTO R18

DEBRA P. HICKS, P.E./L.S.I.
WILLIAM M. HICKS. III, P.E./P.S.

To: Washington TRU Solutions, LLC
4021 NATIONAL PARKS HIGHWAY
P. O. BOX 2078
Carlsbad, NM 8822

Material: ROM Salt

Test Method: ASTM: D 1556 Sand Cone

Project: Lab and Field Testing Services for Compacted Salt Testing
Project No. 2012.1112

Date of Test: June 5, 2012

Depth: See Below

Depth of Probe: N/A

Test No.	Location	Dry Density % Max	% Moisture	Depth
SC 1	On W. 30 Drift 80' S. of Bulkhead and 10' W. of E.Wall (Corresponds to SG 4)	77.0 *	1.6	1st Lift Depth 4"

Control Density: 135.0
ASTM D 1557

Optimum Moisture: 0.0%

Required Compaction: 85%

Densometer ID: N/A

*** Does Not Meet Specifications**

PETTIGREW & ASSOCIATES

BY: Erica M Hart

Lab No.: 12 10883

BY: for Debra Hicks **P.E.**

Copies To: Washington TRU Solutions, LLC

LABORATORY TEST REPORT

PETTIGREW & ASSOCIATES, P.A.

1110 N. GRIMES
HOBBS, NM 88240
(575) 393-9827

AASHTO R18

DEBRA P. HICKS, P.E./L.S.I.
WILLIAM M. HICKS. III, P.E./P.S.

To: Washington TRU Solutions, LLC
4021 NATIONAL PARKS HIGHWAY
P. O. BOX 2078
Carlsbad, NM 88221

Type of Test: Sieve Analysis of Fine and Coarse Aggregate
ASTM: C 136

Project: Lab and Field Testing Services for Compacted Salt Testing
Project No. 2012.1112

Type of Material: ROM Salt

Date of Test: 5/22/2012

Location: WIPP Site

Test No: SA-1

Screen Size		% Passing	Required Limits
50.0 mm	2"	100	--
25.0 mm	1"	80	--
19.0 mm	3/4"	77	--
12.5 mm	1/2"	71	--
9.5 mm	3/8"	68	--
4.75 mm	#4	53	--
2.36 mm	#8	35	--
2.0 mm	#10	31	--
1.18 mm	#16	21	--
600 µm	#30	12	--
425 µm	#40	10	--
300 µm	#50	7	--
180 µm	#80	4	--
150 µm	#100	3	--
75 µm	#200	1.2	--
Moisture (%)		0.1	

Delivered 5/18/2012

Lab No.: 12 10356

Copies To: Washington TRU Solutions, LLC

PETTIGREW & ASSOCIATES

By: Erica M. Hart

By: for Debra Hicks P.E.

LABORATORY TEST REPORT

PETTIGREW & ASSOCIATES, P.A.

1110 N. GRIMES
HOBBS, NM 88240
(575) 393-9827

AASHTO R18

DEBRA P. HICKS, P.E./L.S.I.
WILLIAM M. HICKS. III, P.E./P.S.

To: Washington TRU Solutions, LLC
4021 NATIONAL PARKS HIGHWAY
P. O. BOX 2078
Carlsbad, NM 88221

Type of Test: Sieve Analysis of Fine and Coarse Aggregate
ASTM: C 136

Project: Lab and Field Testing Services for Compacted Salt Testing
Project No. 2012.1112

Type of Material: Course ROM Salt

Date of Test: 5/22/2012

Location: WIPP Site

Test No: SA-2

Screen Size		% Passing	Required Limits
50.0 mm	2"	100	--
25.0 mm	1"	82	--
19.0 mm	3/4"	78	--
12.5 mm	1/2"	68	--
9.5 mm	3/8"	57	--
4.75 mm	#4	29	--
2.36 mm	#8	13	--
2.0 mm	#10	11	--
1.18 mm	#16	6	--
600 µm	#30	4	--
425 µm	#40	3	--
300 µm	#50	3	--
180 µm	#80	2	--
150 µm	#100	2	--
75 µm	#200	0.7	--
Moisture (%)		0.1	

Delivered 5/18/2012

Lab No.: 12 10357

Copies To: Washington TRU Solutions, LLC

PETTIGREW & ASSOCIATES

By: Erica M. Hart

By: for Debra Hicks P.E.

LABORATORY TEST REPORT

PETTIGREW & ASSOCIATES, P.A.

1110 N. GRIMES
HOBBS, NM 88240
(575) 393-9827

AASHTO R18

DEBRA P. HICKS, P.E./L.S.I.
WILLIAM M. HICKS. III, P.E./P.S.

To: Washington TRU Solutions, LLC
4021 NATIONAL PARKS HIGHWAY
P. O. BOX 2078
Carlsbad, NM 88221

Type of Test: Sieve Analysis of Fine and Coarse Aggregate
ASTM: C 136

Project: Lab and Field Testing Services for Compacted Salt Testing
Project No. 2012.1112

Type of Material: Course ROM Salt

Date of Test: 5/22/2012

Location: WIPP Site

Test No: SA-3

Screen Size		% Passing	Required Limits
50.0 mm	2"	100	--
25.0 mm	1"	98	--
19.0 mm	3/4"	95	--
12.5 mm	1/2"	90	--
9.5 mm	3/8"	85	--
4.75 mm	#4	67	--
2.36 mm	#8	45	--
2.0 mm	#10	41	--
1.18 mm	#16	29	--
600 µm	#30	18	--
425 µm	#40	14	--
300 µm	#50	11	--
180 µm	#80	7	--
150 µm	#100	5	--
75 µm	#200	2.0	--
Moisture (%)		0.0	

Delivered 5/18/2012

Lab No.: 12 10358-10359

Copies To: Washington TRU Solutions, LLC

PETTIGREW & ASSOCIATES

By: Erica M. Hatt

By: for Debra Hicks P.E.

LABORATORY TEST REPORT

PETTIGREW & ASSOCIATES, P.A.

1110 N. GRIMES
HOBBS, NM 88240
(575) 393-9827

AASHTO R18

DEBRA P. HICKS, P.E./L.S.I.
WILLIAM M. HICKS. III, P.E./P.S.

To: Washington TRU Solutions, LLC
4021 NATIONAL PARKS HIGHWAY
P. O. BOX 2078
Carlsbad, NM 88221

Type of Test: Materials Finer than #200 Sieve in Mineral Aggregates by Washing
ASTM: C 117

Sieve Analysis of Fine and Coarse Aggregate
ASTM: C 136

Project: Lab and Field Testing Services for Compacted Salt Testing
Project No. 2012.1112

Type of Material: ROM Salt

Date of Test: 6/19/2012

Location: Wipp Site Underground from Stockpile

Test No: SA-4

Screen Size		% Passing	Required Limits
75.0 mm	3"	91	
63.0 mm	2½"	85	
50.0 mm	2"	82	
37.5 mm	1½"	80	
31.5 mm	1¼"	78	
25.0 mm	1"	76	
19.0 mm	3/4"	74	
12.5 mm	1/2"	71	
9.5 mm	3/8"	67	
4.75 mm	#4	52	
2.0 mm	#10	32	
425 µm	#40	13	
180 µm	#80	7	
75 µm	#200	3.1	
Moisture (%)		0.0	

Sampled and Delivered 6/18/2012

Lab No.: 12 11226-11227

Copies To: Washington TRU Solutions, LLC

PETTIGREW & ASSOCIATES

By: Erica M. Hart

By: for Debra Hicks **P.E.**

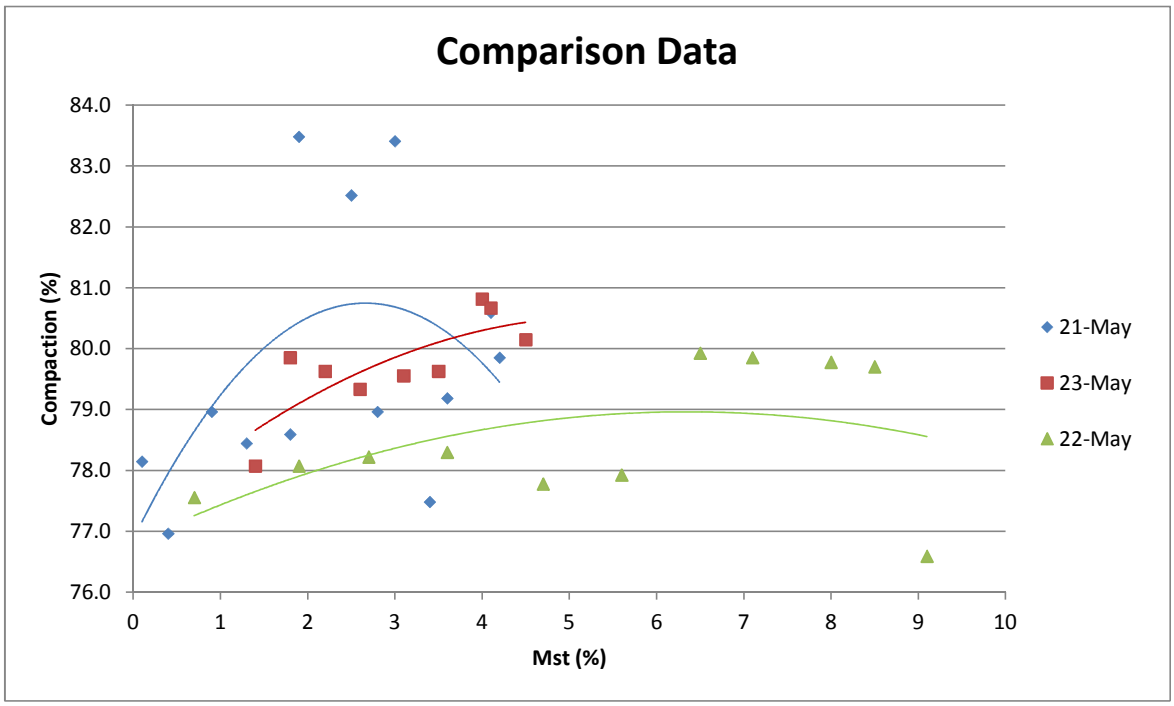

6 inch mold		6 inch mold		4 inch mold	
21-May		23-May		22-May	
%Mst.	Dry Density	%Mst.	Dry Density	%Mst.	Dry Density
0.1	78.1	1.4	78.1	0.7	77.6
0.4	77	1.8	79.9	1.9	78.1
0.9	79	2.2	79.6	2.7	78.2
1.3	78.4	2.6	79.3	3.6	78.3
1.8	78.6	3.1	79.6	4.7	77.8
1.9	83.8	3.5	79.6	5.6	77.9
2.5	82.5	4	80.8	6.5	79.9
2.8	79	4.1	80.7	7.1	79.9
3	83.4	4.5	80.1	8	79.8
3.4	77.5			8.5	79.7
3.6	79.2			9.1	76.6
4.2	79.9				
4.1	80.6				

APPENDIX B -1

Appendix B – 1 Contains The Following From Scenario 1;

1. The Work Package Data Log Sheets Attachment A – Lower Zone Lift Placement Information
2. The Work Package Data Log Sheets Attachment B – Lower Zone Lift Testing Results

Lower Zone

Scenario: 1

Test Region 1

ATTACHMENT A
Page 1 of 1

Date	Lift #	LHD #	Buckets Placed	Total cuyd placed	Time Water Applied (min.)	Water Applied approx (gal.)	Moisture sample# or %
6/4/2012	1	002C	7.5	27	4	80	
6/6/2012	2	002C	6	21.6	3:00	60	1.6%
6/7/2012	3	002C	3	10.8	1:30	30	1.5%
6/11/2012	3	002C	3	10.8	1:30	30	
6/12/2012	4	002C	3.5	12.6	1:45	35	1.9%
6/12/2012	4	002C	2.5	9	1:20	26.7	
6/13/2012	5	002C	3	10.8	1:30	30	
6/13/2012	5	002C	3	10.8	1:30	30	
6/14/2012	6	002C	3	10.8	1:30	30	
6/14/2012	6	002C	3	10.8	1:30	30	
6/14/2012	7	002C	3	10.8	1:30	30	0.3%
6/14/2012	7	002C	3	10.8	1:30	30	

Attachment to WO#1202108C

Lower Zone

Scenario:1

Test Region:1

ATTACHMENT B

Page 1 of 4

Date	Lift #	Compactor Type	Compactor Speed (ft/min)	Cumulative Number of Compaction (No. of Passes)	Sample Location Distance off West Rib (ft)	Sample Locaton Distance off North Area Boundary (ft)	Sample Number	Wet Density	Moisture %	Dry Density
6/5/2012	1	ROLLER	116.93	6						
6/7/2012	2	ROLLER	132.28	2	4.5	36	SG14	73.3	2.2	71.8
6/7/2012	2	ROLLER	132.28	2	4.5	45	SG13	73.6	1.2	74.2
6/7/2012	2	ROLLER	132.25	2	13	37	SG15	75.9	1.2	74.4
6/7/2012	2	ROLLER	132.28	2	12.5	44	SG16	77.3	2.1	75.6
6/7/2012	2	ROLLER	141.31	4	8.25	43	SG17	77.6	2	76.1
6/7/2012	2	ROLLER	141.31	4	8	34.5	SG18	76.8	1.2	75.9
6/7/2012	2	ROLLER	141.31	4	12.5	36	SG19	73.9	1.2	72.9
6/7/2012	2	ROLLER	141.31	4	12.5	46	SG20	77	1.7	75.8
6/7/2012	2	ROLLER	148.12	6	8	41	SG21	77.3	2.3	75.6
6/7/2012	2	ROLLER	148.12	6	7.9	33.9	SG22	75.9	1.1	75
6/7/2012	2	ROLLER	148.12	6	11.7	46.4	SG23	78.1	1.5	76.7

Attachment to WO#1202108C

Lower Zone

Scenario:1

Test Region:1

ATTACHMENT B

Date	Lift #	Compactor Type	Compactor Speed (ft/min)	Cumulative Number of Compaction (No. of Passes)	Sample Location Distance off West Rib (ft)	Sample Locaton Distance off North Area Boundary (ft)	Sample Number	Wet Density	Moisture %	Dry Density
6/7/2012	2	ROLLER	148.12	6	13.5	37	SG24	76.3	1.5	75
6/11/2012	3	ROLLER	153.75	2	5.5	35.8	SG25	74.4	1.2	74.4
6/11/2012	3	ROLLER	153.75	2	5.5	32.8	SG26	76.1	2.8	74.1
6/11/2012	3	ROLLER	153.75	2	11.75	34	SG27	74.2	1.3	73.1
6/11/2012	3	ROLLER	153.75	2	11.75	42.5	SG28	74	0.7	73.3
6/11/2012	3	ROLLER	145.59	4	6.5	41	SG29	74.6	1.9	73.2
6/11/2012	3	ROLLER	145.59	4	5.5	31.5	SG30	76.1	1.7	74.7
6/11/2012	3	ROLLER	145.59	4	11.5	33	SG31	73.3	1.2	72.4
6/11/2012	3	ROLLER	145.59	4	13.5	43	SG32	75.9	0.7	75.3
6/11/2012	3	ROLLER	131.59	6	6.5	31	SG34	77.4	2.2	75.9
6/11/2012	3	ROLLER	131.59	6	6.5	40	SG33	77.4	1.6	76.3
6/11/2012	3	ROLLER	131.59	6	13.5	31	SG35	74.1	1.2	73

Attachment to WO#1202108C

Lower Zone

Scenario:1

Test Region:1

ATTACHMENT B

Date	Lift #	Compactor Type	Compactor Speed (ft/min)	Cumulative Number of Compaction (No. of Passes)	Sample Location Distance off West Rib (ft)	Sample Locaton Distance off North Area Boundary (ft)	Sample Number	Wet Density	Moisture %	Dry Density
6/11/2012	3	ROLLER	131.59	6	13.75	41	SG36	74.3	1.1	73.5
6/13/2012	4	ROLLER	155.94	2	6.25	40.75	SG37	76.2	1.7	74.9
6/13/2012	4	ROLLER	155.94	2	6.33	32	SG38	77.4	1.7	76.1
6/13/2012	4	ROLLER	155.94	2	13.5	32	SG39	75	1.7	73.8
6/13/2012	4	ROLLER	155.94	2	13.3	40.67	SG40	74	1.7	73.6
6/13/2012	4	ROLLER	155.65	4	6	41.25	SG41	76.1	2.1	74.3
6/13/2012	4	ROLLER	155.65	4	6.3	32	SG42	75.3	2.1	73.7
6/13/2012	4	ROLLER	155.65	4	11	32	SG43	76.9	2.1	75.3
6/13/2012	4	ROLLER	155.65	4	10.5	41.75	SG44	76.6	2.7	74.7
6/13/2012	4	ROLLER	189.61	6	7.5	40	SG45	77.1	2.7	75.1
6/13/2012	4	ROLLER	189.61	6	7.5	33	SG46	78.3	2.6	76.3
6/13/2012	4	ROLLER	189.61	6	13	33	SG47	76.3	2.7	74.3

Lower Zone

Scenario:1

Test Region:1

ATTACHMENT B

Date	Lift #	Compactor Type	Compactor Speed (ft/min)	Cumulative Number of Compaction (No. of Passes)	Sample Location Distance off West Rib (ft)	Sample Locaton Distance off North Area Boundary (ft)	Sample Number	Wet Density	Moisture %	Dry Density
6/13/2012	4	ROLLER	189.91	6	13	41	SG48	76.2	2.7	74.1
6/18/2012	7	ROLLER	132.28	6	2.5	35	SG49	73	0.4	73.3
6/18/2012	7	ROLLER	132.28	6	8	35	SG50	74	0.3	73.6
6/18/2012	7	ROLLER	132.28	6	13	35	SG51	74.8	0.3	74.5

APPENDIX B – 2

Appendix B – 2 Contains The Following From Scenario 2;

1. The Work Package Data Log Sheets Attachment A – Lower Zone Lift Placement Information
2. The Work Package Data Log Sheets Attachment B – Lower Zone Lift Testing Results

Lower Zone

Scenario: 2

Test Region: 2

ATTACHMENT A
Page 1 of 1

Date	Lift #	LHD #	Buckets Placed	Total cuyd placed	Time Water Applied (min.)	Water Applied approx (gal.)	Moisture sample# or %
7/24/2012	1	002C	3	10.8	0	0	N/A
7/24/2012	2	002C	3	10.8	0	0	N/A
7/24/2012	3	002C	3	10.8	0	0	N/A
7/24/2012	4	002C	3	10.8	0	0	N/A
7/25/2012	5	002C	3	10.8	0	0	N/A
7/26/2012	6	002C	3	10.8	0	0	N/A
7/26/2012	7	002C	3	10.8	0	0	N/A
7/26/2012	8	002C	3	10.8	0	0	N/A
7/30/2012	9	002C	3	10.8	0	0	N/A
7/30/2012	10	002C	3	10.8	0	0	N/A

Attachment to WO#1202108C

Lower Zone

Scenario: 2

Test Region: 2

ATTACHMENT B

Date	Lift #	Compactor Type	Compactor Speed (ft/min)	Cumulative Number of Compaction (No. of Passes)	Sample Location Distance off West Rib (ft)	Sample Locaton Distance off North Area Boundary (ft)	Sample Number	Moisture %	Density
7/25/2012	4	ROLLER	102.5	2	8	13	SG85	0.3	75.0
7/25/2012	4	ROLLER	102.5	2	8	7	SG86	0.3	73.3
7/25/2012	4	ROLLER	102.5	2	13.5	8.5	SG87	0.3	74.6
7/25/2012	4	ROLLER	102.5	2	13.5	15	SG88	0.3	76.1
7/25/2012	4	ROLLER	79	4	8.5	10.5	SG89	0.4	77.8
7/25/2012	4	ROLLER	79	4	8.5	6	SG90	0	75.9
7/25/2012	4	ROLLER	79	4	13.5	9	SG91	0.2	72.6
7/25/2012	4	ROLLER	79	4	13.5	16	SG92	0.3	76.4
7/25/2012	4	ROLLER	117.5	6	8	12	SG93	0.4	74.9
7/25/2012	4	ROLLER	117.5	6	6.5	6	SG94	0.3	73.9
7/25/2012	4	ROLLER	117.5	6	12.5	8	SG95	0.3	75.1
7/25/2012	4	ROLLER	117.5	6	14	13.5	SG96	0.2	76.7

Attachment to WO#1202108C

Lower Zone

Scenario: 2

Test Region: 2

Date	Lift #	Compactor Type	Compactor Speed (ft/min)	Cumulative Number of Compaction (No. of Passes)	Sample Location Distance off West Rib (ft)	Sample Locaton Distance off North Area Boundary (ft)	Sample Number	Moisture %	Density
7/26/2012	6	ROLLER	93.5	2	6.5	14	SG97	0.6	75.3
7/26/2012	6	ROLLER	93.5	2	6.5	9	SG98	0.3	73.0
7/26/2012	6	ROLLER	93.5	2	8	12	SG99	0.5	74.1
7/26/2012	6	ROLLER	93.5	2	15	12.5	SG100	0.4	75.0
7/26/2012	6	ROLLER	68.0	4	8.5	15	SG101	0.5	78.3
7/26/2012	6	ROLLER	68.0	4	8.5	7	SG102	0.5	75.0
7/26/2012	6	ROLLER	68.0	4	12.5	9.5	SG103	0.5	75.1
7/26/2012	6	ROLLER	68.0	4	13	16	SG104	0.5	73.0
7/26/2012	6	ROLLER	83.0	6	8	12.5	SG105	0.5	74.7
7/26/2012	6	ROLLER	83.0	6	9	4.5	SG106	0.5	71.5
7/26/2012	6	ROLLER	83.0	6	14	7	SG107	0.5	74.0
7/26/2012	6	ROLLER	83.0	6	14	14	SG108	0.4	76.6

Attachment to WO#1202108C

Lower Zone

Scenario: 2

Test Region: 2

Date	Lift #	Compactor Type	Compactor Speed (ft/min)	Cumulative Number of Compaction (No. of Passes)	Sample Location Distance off West Rib (ft)	Sample Locaton Distance off North Area Boundary (ft)	Sample Number	Moisture %	Density
7/30/2012	8	LHD	93.5	2	7.5	15	SG109	0	74.7
7/30/2012	8	LHD	93.5	2	7	6.5	SG110	0.1	73.1
7/30/2012	8	LHD	93.5	2	12.5	7	SG111	0.1	72.6
7/30/2012	8	LHD	93.5	2	12	14.5	SG112	0	74.6
7/30/2012	8	LHD	93.5	4	8.5	14	SG113	0	76.6
7/30/2012	8	LHD	93.5	4	8.5	5.5	SG114	0.1	68.4
7/30/2012	8	LHD	93.5	4	13.5	6	SG115	0	72.4
7/30/2012	8	LHD	93.5	4	13.5	14	SG116	0	74.5
7/30/2012	8	LHD	83.1	6	8	13	SG117	0	77.2
7/30/2012	8	LHD	83.1	6	7	5	SG118	0	75.5
7/30/2012	8	LHD	83.1	6	13.5	5.5	SG119	0.4	72.0
7/30/2012	8	LHD	83.1	6	11.5	13.5	SG120	0.7	75.0

Attachment to WO#1202108C

Lower Zone

Scenario: 2

Test Region: 2

Date	Lift #	Compactor Type	Compactor Speed (ft/min)	Cumulative Number of Compaction (No. of Passes)	Sample Location Distance off West Rib (ft)	Sample Locaton Distance off North Area Boundary (ft)	Sample Number	Moisture %	Density
7/31/2012	10	LHD	95.0	2	6.5	14	SG121	0.3	74.1
7/31/2012	10	LHD	95.0	2	7.5	4.5	SG122	0.3	72.5
7/31/2012	10	LHD	95.0	2	12	6.5	SG123	0.4	70.1
7/31/2012	10	LHD	95.0	2	12	14	SG124	0.4	73.3
7/31/2012	10	LHD	83.1	4	7	12.5	SG125	0.4	76.4
7/31/2012	10	LHD	83.1	4	7	3.5	SG126	0.3	74.1
7/31/2012	10	LHD	83.1	4	12	4.5	SG127	0.5	73.8
7/31/2012	10	LHD	83.1	4	12	12	SG128	0.5	75.7
7/31/2012	10	LHD	95.0	6	8.5	13	SG129	0.4	78.1
7/31/2012	10	LHD	95.0	6	6	5.5	SG130	0.3	72.1
7/31/2012	10	LHD	95.0	6	11	6	SG131	0.4	73.9
7/31/2012	10	LHD	95.0	6	11	13.5	SG132	0.4	76.9

Attachment to WO#1202108C

APPENDIX C -1

Appendix C - 1 Contains The Following From Scenario 1;

1. The Work Package Data Log Sheets Attachment C – Upper Zone Lift Placement Information
2. The Work Package Data Log Sheets Attachment D – Upper Zone Lift Placement Information

Upper Zone

Scenario:1

Test Region:1

ATTACHMENT C
Page 1 of 3

Date	Staged Batch #	LHD #	Buckets Staged	Total cuyd staged	Water Applied approx (gal.)	Time Water Applied (min.)	Moisture sample# or %
6/21/2012	1	002C	2	7.2	20	1:00	
6/25/2012	2	002C	2	7.2	20	1:00	
6/25/2012	3	002C	2	7.2	20	1:00	1.3%
6/26/2012	4	002C	2	7.2	20	1:00	
6/27/2012	5	002C	2	7.2	20	1:00	
6/27/2012	6	002C	2	7.2	20	1:00	
6/28/2012	7	002C	2	7.2	20	1:00	0.8%
7/2/2012	8	002C	2	7.2	20	1:00	
7/2/2012	9	002C	2	7.2	20	1:00	
7/2/2012	10	002C	2	7.2	20	1:00	
7/9/2012	11	002C	2	7.2	20	1:00	
7/9/2012	12	002C	2	7.2	20	1:00	

Attachment to WO#1202108C

Upper Zone

Scenario: 1

Test Region: 1

ATTACHMENT C
Page 2 of 3

Date	Staged Batch #	LHD #	Buckets Staged	Total cuyd staged	Water Applied approx (gal.)	Time Water Applied (min.)	Moisture sample# or %
7/9/2012	13	002C	2	7.2	20	1:00	1.10%
7/9/2012	14	002C	2	7.2	20	1:00	
7/11/2012	15	002C	2	7.2	20	1:00	
7/11/2012	16	002C	2	7.2	20	1:00	
7/12/2012	17	002C	2	7.2	20	1:00	
7/12/2012	18	002C	2	7.2	20	1:00	
7/12/2012	19	002C	2	7.2	20	1:00	1.60%
7/16/2012	20	002C	2	7.2	20	1:00	
7/17/2012	21	002C	2	7.2	20	1:00	
7/17/2012	22	002C	2	7.2	20	1:00	
7/17/2012	23	002C	2	7.2	20	1:00	
7/17/2012	24	002C	2	7.2	20	1:00	

Attachment to WO#1202108C

Upper Zone

Scenario: 1

Test Region: 1

ATTACHMENT C
Page 3 of 3

Date	Staged Batch #	LHD #	Buckets Staged	Total cuyd staged	Water Applied approx (gal.)	Time Water Applied (min.)	Moisture sample# or %
6/17/2012	25	002C	2	7.2	20	1:00	
6/18/2012	26	002C	2	7.2	20	1:00	
6/18/2012	27	002C	2	7.2	20	1:00	
6/18/2012	28	002C	2	7.2	20	1:00	
6/19/2012	29	002C	2	7.2	20	1:00	
6/19/2012	30	002C	2	7.2	20	1:00	
6/19/2012	31	002C	2	7.2	20	1:00	
6/19/2012	32	002C	2	7.2	20	1:00	

Attachment to WO#1202108C

Upper Zone

Scenario:1

Test Region: 1

ATTACHMENT D

Date	Lift #	Staged Batch #	LHD#	Buckets Placed	Plate Impact Time (sec)	Cumulative Number of Compaction (No. of Passes)	Sample Location Distance off West Rib (ft)	Sample Locaton Distance from Back (ft)	Sample Number	Wet Density	Moisture %	Dry Density
6/26/2012	3	3	002C	2	5	1	3	3	SG52	59.7	0.9	58.4
6/26/2012	3	3	002C	2	5	1	7	2.75	SG53	63.2	1.6	62.1
6/26/2012	3	3	002C	2	5	1	11	3	SG54	68.8	0.7	68.3
6/26/2012	3	3	002C	2	5	1	3.5	4.75	SG55	61.5	2	60.1
6/26/2012	3	3	002C	2	5	1	7	4.75	SG56	64.6	1.2	63.9
6/26/2012	3	3	002C	2	5	1	10	4.5	SG57	62.1	1.4	61.2
6/29/2012	7	7	002C	2	5	1	5	8	SG60	64.4	0.6	64.1
6/29/2012	7	7	002C	2	5	1	12	8	SG61	61	1	60.4
6/29/2012	7	7	002C	2	5	1	6	6	SG62	67.4	0.8	66.8
6/29/2012	7	7	002C	2	5	1	15	6	SG63	65.6	0.7	65.1
6/29/2012	7	7	002C	2	5	1	8	4	SG64	63.4	0.9	62.8
6/29/2012	7	7	002C	2	5	1	6	4	SG65	67.6	1	66.8

Attachment to WO#1202108C

Upper Zone

Scenario:1

Test Region:1

ATTACHMENT D

Page 2 of 3

Date	Lift #	Staged Batch #	LHD#	Buckets Placed	Plate Impact Time (sec)	Cumulative Number of Compaction (No. of Passes)	Sample Location Distance off West Rib (ft)	Sample Locaton Distance from Back (ft)	Sample Number	Wet Density	Moisture %	Dry Density
7/10/2012	13	13	002C	2	0	1	3	6.5	SG66	70.4	1.7	68.7
7/10/2012	13	13	002C	2	0	1	8.5	5	SG67	73.9	1.7	72.9
7/10/2012	13	13	002C	2	0	1	2.5	5	SG68	71.9	0.9	71.3
7/10/2012	13	13	002C	2	0	1	12.5	4	SG69	70.9	0.4	70.5
7/10/2012	13	13	002C	2	0	1	3.5	2.75	SG70	67.7	0.6	67.3
7/10/2012	13	13	002C	2	0	1	10	2.5	SG71	67.1	1.5	66
7/11/2012	19	19	002C	2	0	1	4.5	7	SG72	55.5	1.7	55
7/11/2012	19	19	002C	2	0	1	11.5	7	SG73	62.5	2.2	61.1
7/11/2012	19	19	002C	2	0	1	5.5	5	SG74	62.3	1.7	61
7/11/2012	19	19	002C	2	0	1	14.5	5	SG75	60.4	0.7	59.9
7/11/2012	19	19	002C	2	0	1	4	3.5	SG76	61.4	1.8	60.1
7/11/2012	19	19	002C	2	0	1	11.5	3	SG77	66.4	1.6	66.4

Attachment to WO#1202108C

Upper Zone

Scenario:1

Test Region:1

ATTACHMENT D

Page 3 of 3

Date	Lift #	Staged Batch #	LHD#	Buckets Placed	Plate Impact Time (sec)	Cumulative Number of Compaction (No. of Passes)	Sample Location Distance off West Rib (ft)	Sample Locaton Distance from Back (ft)	Sample Number	Wet Density	Moisture %	Dry Density
7/23/2012	32	32	002C	2	0	1	4	7.5	SG79	59.6	2.1	57.9
7/23/2012	32	32	002C	2	0	1	12	6.5	SG80	56.3	2.2	54.7
7/23/2012	32	32	002C	2	0	1	405	4	SG81	65.3	0.6	64.6
7/23/2012	32	32	002C	2	0	1	13	4	SG82	61	1.1	60.3
7/23/2012	32	32	002C	2	0	1	4	2	SG83	61.7	1.1	61
7/23/2012	32	32	002C	2	0	1	11	2	SG84	61.2	0.7	60.7

Attachment to WO#1202108C

APPENDIX C – 2

Appendix C - 2 Contains The Following From Scenario 2;

1. The Work Package Data Log Sheets Attachment C – Upper Zone Lift Placement Information
2. The Work Package Data Log Sheets Attachment D – Upper Zone Lift Placement Information

Upper Zone

Scenario: 2

Test Region: 2

ATTACHMENT C
Page 1 of 4

Date	Staged Batch #	LHD #	Buckets Staged	Total cuyd staged	Water Applied approx (gal.)	Time Water Applied (min.)	Moisture sample# or %
8/8/2012	1	002C	2	7.2	0	N/A	N/A
8/8/2012	2	002C	2	7.2	0	N/A	N/A
8/8/2012	3	002C	2	7.2	0	N/A	N/A
8/9/2012	4	002C	2	7.2	0	N/A	N/A
8/9/2012	5	002C	2	7.2	0	N/A	N/A
8/9/2012	6	002C	2	7.2	0	N/A	N/A
8/9/2012	7	002C	2	7.2	0	N/A	N/A
8/13/2012	8	002C	2	7.2	0	N/A	N/A
8/13/2012	9	002C	2	7.2	0	N/A	N/A
8/13/2012	10	002C	2	7.2	0	N/A	N/A
8/14/2012	11	002C	2	7.2	0	N/A	N/A
8/14/2012	12	002C	2	7.2	0	N/A	N/A

Attachment to WO#1202108C

Upper Zone

Scenario: 2

Test Region: 2

ATTACHMENT C
Page 2 of 4

Date	Staged Batch #	LHD #	Buckets Staged	Total cuyd staged	Water Applied approx (gal.)	Time Water Applied (min.)	Moisture sample# or %
8/15/2012	13	002C	2	7.2	0	N/A	N/A
8/15/2012	14	002C	2	7.2	0	N/A	N/A
8/15/2012	15	002C	2	7.2	0	N/A	N/A
8/15/2012	16	002C	2	7.2	0	N/A	N/A
8/15/2012	17	002C	2	7.2	0	N/A	N/A
8/16/2012	18	002C	2	7.2	0	N/A	N/A
8/16/2012	19	002C	2	7.2	0	N/A	N/A
8/20/2012	20	002C	2	7.2	0	N/A	N/A
8/20/2012	21	002C	2	7.2	0	N/A	N/A
8/20/2012	22	002C	2	7.2	0	N/A	N/A
8/20/2012	23	002C	2	7.2	0	N/A	N/A

Attachment to WO#1202108C

Upper Zone

Scenario: 2

Test Region: 2

ATTACHMENT C
Page 3 of 4

Date	Staged Batch #	LHD #	Buckets Staged	Total cuyd staged	Water Applied approx (gal.)	Time Water Applied (min.)	Moisture sample# or %
8/21/2012	24	002C	2	7.2	0	N/A	N/A
8/21/2012	25	002C	2	7.2	0	N/A	N/A
8/21/2012	26	002C	2	7.2	0	N/A	N/A
8/21/2012	27	002C	2	7.2	0	N/A	N/A
8/22/2012	28	002C	2	7.2	0	N/A	N/A
8/22/2012	29	002C	2	7.2	0	N/A	N/A
8/22/2012	30	002C	2	7.2	0	N/A	N/A
8/23/2012	31	002C	2	7.2	0	N/A	N/A
8/23/2012	32	002C	2	7.2	0	N/A	N/A
8/23/2012	33	002C	2	7.2	0	N/A	N/A
8/23/2012	34	002C	2	7.2	0	N/A	N/A
8/23/2012	35	002C	2	7.2	0	N/A	N/A
8/23/2012	36	002C	2	7.2	0	N/A	N/A

Attachment to WO#1202108C

Upper Zone

Scenario: 2

Test Region: 2

ATTACHMENT C
Page 4 of 4

Date	Staged Batch #	LHD #	Buckets Staged	Total cuyd staged	Water Applied approx (gal.)	Time Water Applied (min.)	Moisture sample# or %
8/24/2012	37	002C	2	7.2	0	N/A	N/A
8/24/2012	38	002C	2	7.2	0	N/A	N/A
8/24/2012	39	002C	2	7.2	0	N/A	N/A
8/24/2012	40	002C	2	7.2	0	N/A	N/A

Attachment to WO#1202108C

Upper Zone

Scenario: 2

Test Region: 2

ATTACHMENT D

Page 1 of 2

Date	Lift #	Staged Batch #	LHD#	Buckets Placed	Plate Impact Time (sec)	Cumulative Number of Compaction (No. of Passes)	Sample Location Distance off West Rib (ft)	Sample Locaton Distance from Back (ft)	Sample Number	Moisture %	Density %
8/14/2012	10	10	002C	2	0	1	3.5	6	SG136	0.3	65.1
8/14/2012	10	10	002C	2	0	1	11	7	SG137	0.4	66.5
8/14/2012	10	10	002C	2	0	1	6	4.5	SG138	0.4	64.7
8/14/2012	10	10	002C	2	0	1	13	4	SG139	0.4	65.3
8/14/2012	10	10	002C	2	0	1	3	3	SG140	0.4	63.6
8/14/2012	10	10	002C	2	0	1	10	3	SG141	0.4	62.1
8/16/2012	17	17	002C	2	0	1	3	7.5	SG142	0.3	55.1
8/16/2012	17	17	002C	2	0	1	14	8	SG143	0.4	59.0
8/16/2012	17	17	002C	2	0	1	5	5.5	SG144	0.4	61.3
8/16/2012	17	17	002C	2	0	1	12	5	SG145	0.4	63.7
8/16/2012	17	17	002C	2	0	1	3	3	SG146	0.4	63.6
8/16/2012	17	17	002C	2	0	1	14	3	SG147	0.4	58.8

Attachment to WO#1202108C

Upper Zone

Scenario: 2

Test Region: 2

ATTACHMENT D

Page 2 of 2

Date	Lift #	Staged Batch #	LHD#	Buckets Placed	Plate Impact Time (sec)	Cumulative Number of Compaction (No. of Passes)	Sample Location Distance off West Rib (ft)	Sample Locaton Distance from Back (ft)	Sample Number	Moisture %	Density %
8/22/2012	27	30	002C	2	0	1	2	8	SG148	0.4	60.8
8/22/2012	27	30	002C	2	0	1	12	7.5	SG149	0.3	61.7
8/22/2012	27	30	002C	2	0	1	5	5	SG150	0.6	61.1
8/22/2012	27	30	002C	2	0	1	12	4	SG151	0.5	63.1
8/22/2012	27	30	002C	2	0	1	5	3	SG152	0.5	64.1
8/22/2012	27	30	002C	2	0	1	12	2.5	SG153	0.4	63.6
8/24/2012	37	37	002C	2	0	1	2	7.5	SG154	0.3	61.7
8/24/2012	37	37	002C	2	0	1	13	8	SG155	0.2	62.1
8/24/2012	37	37	002C	2	0	1	4	5.5	SG156	0.4	61.3
8/24/2012	37	37	002C	2	0	1	13	5.5	SG157	0.5	64.2
8/24/2012	37	37	002C	2	0	1	4	2.5	SG158	0.4	65.3
8/24/2012	37	37	002C	2	0	1	13	2.5	SG159	0.3	62.1

Attachment to WO#1202108C

APPENDIX C-3

Appendix C - 3 Contains The Following From Scenario 3;

1. The Work Package Data Log Sheets Attachment C – ROM Salt Placement Information
2. The Work Package Data Log Sheets Attachment D – ROM Salt Placement Information

Scenario: 3

Test Region: 3

ATTACHMENT C
Page 1 of 3

Date	Staged Batch #	LHD #	Buckets Staged	Total cuyd staged	Water Applied approx (gal.)	Time Water Applied (min.)	Moisture sample# or %
9/4/2012	1	002C	2	7.2	N/A	N/A	N/A
9/4/2012	2	002C	9	32.4	N/A	N/A	N/A
9/5/2012	3	002C	4	14.4	N/A	N/A	N/A
9/5/2012	4	002C	4	14.4	N/A	N/A	N/A
9/5/2012	5	002C	2	7.2	N/A	N/A	N/A
9/5/2012	6	002C	2	7.2	N/A	N/A	N/A
9/5/2012	7	002C	6	21.6	N/A	N/A	N/A
9/6/2012	8	002C	2	7.2	N/A	N/A	N/A
9/6/2012	9	002C	2	7.2	N/A	N/A	N/A
9/6/2012	10	002C	2	7.2	N/A	N/A	N/A
9/6/2012	11	002C	2	7.2	N/A	N/A	N/A
9/6/2012	12	002C	2	7.2	N/A	N/A	N/A

Attachment to WO#1202108C

Scenario: 3

Test Region: 3

ATTACHMENT C
Page 2 of 3

Date	Staged Batch #	LHD #	Buckets Staged	Total cuyd staged	Water Applied approx (gal.)	Time Water Applied (min.)	Moisture sample# or %
9/6/2012	13	002C	2	7.2	N/A	N/A	N/A
9/6/2012	14	002C	2	7.2	N/A	N/A	N/A
9/6/2012	15	002C	4	14.4	N/A	N/A	N/A
9/6/2012	16	002C	2	7.2	N/A	N/A	N/A
9/6/2012	17	002C	4	14.4	N/A	N/A	N/A
9/7/2012	18	138	2	7.2	N/A	N/A	N/A
9/7/2012	19	138	2	7.2	N/A	N/A	N/A
9/7/2012	20	138	4	14.4	N/A	N/A	N/A
9/7/2012	21	138	4	14.4	N/A	N/A	N/A
9/6/2012	22	138	4	14.4	N/A	N/A	N/A
9/6/2012	23	138	4	14.4	N/A	N/A	N/A
9/6/2012	24	138	4	14.4	N/A	N/A	N/A

Attachment to WO#1202108C

Scenario: 3

Test Region: 3

ATTACHMENT C
Page 3 of 3

Date	Staged Batch #	LHD #	Buckets Staged	Total cuyd staged	Water Applied approx (gal.)	Time Water Applied (min.)	Moisture sample# or %
9/7/2012	25	138	4	14.4	N/A	N/A	N/A
9/7/2012	26	138	4	14.4	N/A	N/A	N/A
9/8/2012	27	138	2	7.2	N/A	N/A	N/A
9/8/2012	28	138	4	14.4	N/A	N/A	N/A
9/8/2012	29	138	4	14.4	N/A	N/A	N/A

Attachment to WO#1202108C

Scenario:____3

Test Region:__3

ATTACHMENT D

Page 1 of 2

Date	Lift #	Staged Batch #	LHD#	Buckets Placed	Plate Impact Time (sec)	Cumulative Number of Compaction (No. of Passes)	Sample Location Distance off West Rib (ft)	Sample Locaton Distance from Back (ft)	Sample Number	Wet Density	Moisture %	Dry Density
9/5/2012	5	5	002C	2	N/A	N/A	3'	8'	SG160	64.8	0.4	64.5
9/5/2012	5	5	002C	2	N/A	N/A	12'	8'6"	SG161	63.3	0.3	63.1
9/5/2012	5	5	002C	2	N/A	N/A	3'	4'6"	SG162	68.4	0.5	68.1
9/5/2012	5	5	002C	2	N/A	N/A	14'	4'6"	SG163	67.9	0.5	67.6
9/5/2012	5	5	002C	2	N/A	N/A	6'	3'	SG164	65.2	0.5	64.8
9/5/2012	5	5	002C	2	N/A	N/A	13'	3'	SG165	65.1	0.5	64.7
9/5/2012	Stock Pile	N/A	N/A	N/A	N/A	N/A	E140	North End	SG166	64.5	0.6	64.0
9/5/2012	Stock Pile	N/A	N/A	N/A	N/A	N/A	E140	South End	SG167	63.1	0.5	62.5

Attachment to WO#1202108C

Scenario: 3

Test Region: 3

ATTACHMENT D
Page 2 of 2

Date	Lift #	Staged Batch #	LHD#	Buckets Placed	Plate Impact Time (sec)	Cumulative Number of Compaction (No. of Passes)	Sample Location Distance off West Rib (ft)	Sample Locaton Distance from Back (ft)	Sample Number	Wet Density	Moisture %	Dry Density
9/7/2012	17	17	002C	2	N/A	N/A	2'8"	9'7"	SG168	58.9	0.3	61.6
9/7/2012	17	17	002C	2	N/A	N/A	13'	8'10"	SG169	65.8	0.4	65.6
9/7/2012	17	17	002C	2	N/A	N/A	3'	5'1"	SG170	65.3	0.4	65.1
9/7/2012	17	17	002C	2	N/A	N/A	14'6"	6'	SG171	63.5	0.4	63.3
9/7/2012	17	17	002C	2	N/A	N/A	2'10"	3'2"	SG172	67.1	0.4	66.9
9/7/2012	17	17	002C	2	N/A	N/A	13'4"	3'7"	SG173	63.2	0.4	63.0
9/10/2012	29	29	138	4	N/A	N/A	6'6"	8'	SG174	69.7	0.3	71.7
9/10/2012	29	29	138	4	N/A	N/A	13'6"	8'6"	SG175	68.9	0.4	69.6
9/10/2012	29	29	138	4	N/A	N/A	4'	5'6"	SG176	71.1	0.4	71.0
9/10/2012	29	29	138	4	N/A	N/A	10'	6'	SG177	72.9	0.3	73.0
9/10/2012	29	29	138	4	N/A	N/A	6'	3'	SG178	70.4	0.4	70.1
9/10/2012	29	29	138	4	N/A	N/A	12'	3'	SG179	69.4	0.5	69.2

Attachment to WO#1202108C

APPENDIX D – 1

Appendix D - 1 Contains The Following From Scenario 1;

1. Table 1, Comparison Of Nuclear Density Sampling And Sand Cone Sampling At Corresponding Locations
2. The Laboratory Test Reports For The Nuclear Density Testing Performed On The Lifts Of The Lower Zone
3. The Laboratory Test Reports For The Sand-Cone Testing Performed On The Lifts Of The Lower Zone

Comparison of Nuclear Density Sampling and Sand Cone Sampling At Corresponding Locations

Lower Zone

SG Number	Density	Moisture*		SC Number	Density	Moisture*
SG16	75.6	2.1		SC2	77.9	1.2
SG19	72.9	1.2		SC3	72.0	1.2
SG22	75.0	1.1		SC4	74.1	1.1
SG28	73.3	0.7		SC5	75.7	1.6
Average	74.2	1.3			74.9	1.3

Upper Zone

SG Number	Density	Moisture*		SC Number	Density	Moisture*
SG53	62.1	1.6		SC6	67.5	1.5
SG60	64.1	0.6		SC7	65.0	0.6
SG67	72.9	1.7		SC10	76.4	1.7
SG69	70.5	0.4		SC11	70.2	0.4
SG71	66.0	1.5		SC12	67.6	1.5
SG79	56.4	2.1		SC13	67.9	2.1
SG81	64.6	0.6		SC14	62.1	0.6
Average	65.2	1.2			68.1	1.2

*Moisture determination by ASTM D2216

Table 1

LABORATORY TEST REPORT

PETTIGREW & ASSOCIATES, P.A.

1110 N. GRIMES
HOBBS, NM 88240
(575) 393-9827

AASHTO R18

DEBRA P. HICKS, P.E./L.S.I.
WILLIAM M. HICKS. III, P.E./P.S.

To: Washington TRU Solutions, LLC
4021 NATIONAL PARKS HIGHWAY
P. O. BOX 2078
Carlsbad, NM 8822

Material: ROM Salt

Test Method: ASTM: D 6938

Project: Lab and Field Testing Services for Compacted Salt Testing
Project No. 2012.1112

Date of Test: June 7, 2012

Depth: See Below

Depth of Probe: 6"

Test No.	Location	Dry Density % Max	% Moisture	Depth
SG 13	On W. 30 Drift 80' S. of Bulkhead and 10' W. of E. Wall	74.2 *	1.2	2nd Lift
SG 14	On W. 30 Drift 70' S. of Bulkhead and 10' W. of E. Wall	71.8 *	2.2	2nd Lift
SG 15	On W. 30 Drift 70' S. of Bulkhead and 5' W. of E. Wall	74.4 *	1.2	2nd Lift
SG 16	On W. 30 Drift 80' S. of Bulkhead and 5' W. of E.Wall	75.6 *	2.1	2nd Lift
SG 17	On W. 30 Drift 80' S. of Bulkhead and 12' W. of E.Wall	76.1 *	2.0	2nd Lift
SG 18	On W. 30 Drift 70' S. of Bulkhead and 12' W. of E.Wall	75.9 *	1.2	2nd Lift

Control Density: 135.0
ASTM D 1557

Optimum Moisture: 0.0%
STD/STAT Trech Corrections 19.7

Required Compaction: 85%

Densometer ID: 5071

*** Does Not Meet Specifications**

PETTIGREW & ASSOCIATES

BY: Erica M Hart

Lab No.: 12 10884-10889

BY: for Debra Hicks **P.E.**

Copies To: Washington TRU Solutions, LLC

LABORATORY TEST REPORT

PETTIGREW & ASSOCIATES, P.A.

1110 N. GRIMES
HOBBS, NM 88240
(575) 393-9827

AASHTO R18

DEBRA P. HICKS, P.E./L.S.I.
WILLIAM M. HICKS. III, P.E./P.S.

To: Washington TRU Solutions, LLC
4021 NATIONAL PARKS HIGHWAY
P. O. BOX 2078
Carlsbad, NM 8822

Material: ROM Salt

Test Method: ASTM: D 6938

Project: Lab and Field Testing Services for Compacted Salt Testing
Project No. 2012.1112

Date of Test: June 7, 2012

Depth: See Below

Depth of Probe: 6"

Test No.	Location	Dry Density % Max	% Moisture	Depth
SG 19	On W. 30 Drift 70' S. of Bulkhead and 6' W. of E.Wall	72.9 *	1.2	2nd Lift
SG 20	On W. 30 Drift 80' S. of Bulkhead and 6' W. of E.Wall	75.8 *	1.7	2nd Lift
SG 21	On W. 30 Drift 80' S. and 10' W. of E. Wall	75.6 *	2.3	2nd Lift
SG 22	On W. 30 Drift 70' S. and 10' W. of E. Wall	75.0 *	1.1	2nd Lift
SG 23	On W. 30 Drift 70' S. and 5' W. of E.Wall	76.7 *	1.5	2nd Lift
SG 24	On W. 30 Drift 80' S. of Bulkhead and 5' W. of E.Wall	75.0 *	1.5	2nd Lift

Control Density: 135.0
ASTM D 1557

Optimum Moisture: 0.0%
STD/STAT Trench Corrections 19.7

Required Compaction: 85%

Densometer ID: 5071

*** Does Not Meet Specifications**

PETTIGREW & ASSOCIATES

BY: Erica M Hurt

Lab No.: 12 10890-10896

BY: Alex for Debra Hicks **P.E.**

Copies To: Washington TRU Solutions, LLC

LABORATORY TEST REPORT

PETTIGREW & ASSOCIATES, P.A.

1110 N. GRIMES
HOBBS, NM 88240
(575) 393-9827

AASHTO R18

DEBRA P. HICKS, P.E./L.S.I.
WILLIAM M. HICKS. III, P.E./P.S.

To: Washington TRU Solutions, LLC
4021 NATIONAL PARKS HIGHWAY
P. O. BOX 2078
Carlsbad, NM 8822

Material: ROM Salt

Test Method: ASTM: D 6938

Project: Lab and Field Testing Services for Compacted Salt Testing
Project No. 2012.1112

Date of Test: June 11, 2012

Depth: See Below

Depth of Probe: 6"

Test No.	Location	Dry Density % Max	% Moisture	Depth
SG 25	On Drift W.30 80' S. of Bulkhead and 10' W. of E. Wall	74.4 *	1.2	3rd Lift
SG 26	On Drift W.30 70' S. of Bulkhead and 8' W. of E. Wall	74.1 *	2.8	3rd Lift
SG 27	On Drift W.30 70' S. of Bulkhead and 4' W. of E. Wall	73.1 *	1.3	3rd Lift
SG 28	On Drift W. 30 80' S. of Bulkhead and 5' W. of E. Wall	73.3 *	0.7	3rd Lift
SG 29	On Drift W. 30 70' S. of Bulkhead and 10' W. of E. Wall	73.2 *	1.9	3rd Lift
SG 30	On Drift W. 30 70' S. of Bulkhead and 10' W. of E. Wall	74.7 *	1.7	3rd Lift

Control Density: 135.0
ASTM D 1557

Optimum Moisture: 0.0%
STD/STAT Trench Corrections 11.9

Required Compaction: 80%

Densometer ID: 5071

*** Does Not Meet Specifications**

PETTIGREW & ASSOCIATES

BY: Erica M. Hart

BY: for Debra Hicks **P.E.**

Lab No.: 12 11070-11075

Copies To: Washington TRU Solutions, LLC

LABORATORY TEST REPORT

PETTIGREW & ASSOCIATES, P.A.

1110 N. GRIMES
HOBBS, NM 88240
(575) 393-9827

AASHTO R18

DEBRA P. HICKS, P.E./L.S.I.
WILLIAM M. HICKS. III, P.E./P.S.

To: Washington TRU Solutions, LLC
4021 NATIONAL PARKS HIGHWAY
P. O. BOX 2078
Carlsbad, NM 8822

Material: ROM Salt

Test Method: ASTM: D 6938

Project: Lab and Field Testing Services for Compacted Salt Testing
Project No. 2012.1112

Date of Test: June 11, 2012

Depth: See Below

Depth of Probe: 6"

Test No.	Location	Dry Density % Max	% Moisture	Depth
SG 31	On Drift W.30 70' S. of Bulkhead and 5' W. of E. Wall	72.4 *	1.2	3rd Lift
SG 32	On Drift W.30 80' S. of Bulkhead and 5' W. of E.Wall	75.3 *	0.7	3rd Lift
SG 33	On Drift W.30 80' S. of Bulkhead and 9' W. of E. Wall	76.3 *	1.6	3rd Lift
SG 34	On Drift W. 30 70' S. of Bulkhead and 9' W. of E. Wall	75.9 *	2.2	3rd Lift
SG 35	On Drift W. 30 70' S. of Bulkhead and 4' W. of E. Wall	73.0 *	1.2	3rd Lift
SG 36	On Drift W. 30 80' S. of Bulkhead and 5' W. of E. Wall	73.5 *	1.1	3rd Lift

Control Density: 135.0
ASTM D 1557

Optimum Moisture: 0.0%
STD/STAT Trench Corrections 11.9

Required Compaction: 80%

Densometer ID: 5071

*** Does Not Meet Specifications**

PETTIGREW & ASSOCIATES

BY: Erica M. Hart

Lab No.: 12 11076-11082

BY: for Debra Hicks **P.E.**

Copies To: Washington TRU Solutions, LLC

*Corrected Copy 7-11-12

LABORATORY TEST REPORT

PETTIGREW & ASSOCIATES, P.A.

1110 N. GRIMES
HOBBS, NM 88240
(575) 393-9827

AASHTO R18

DEBRA P. HICKS, P.E./L.S.I.
WILLIAM M. HICKS. III, P.E./P.S.

To: Washington TRU Solutions, LLC
4021 NATIONAL PARKS HIGHWAY
P. O. BOX 2078
Carlsbad, NM 8822

Material: ROM Salt

Test Method: ASTM: D 6938

Project: Lab and Field Testing Services for Compacted Salt Testing
Project No. 2012.1112

Date of Test: June 13, 2012

Depth: See Below

Depth of Probe: 6"

Test No.	Location	Dry Density % Max	% Moisture	Depth
SG 37	On Drift W.30 80' S. of Bulkhead and 12' W. of E. Wall	74.9 *	1.7	4th Lift
SG 38	On Drift W.30 70' S. of Bulkhead and 12' W. of E. Wall	76.1 *	1.7	4th Lift
SG 39	On Drift W.30 70' S. of Bulkhead and 4' W. of E. Wall	73.8 *	1.7	4th Lift
SG 40	On Drift W. 30 80' S. of Bulkhead and 4' W. of E. Wall	73.6 *	1.7	4th Lift
SG 41	On Drift W. 30 80' S. of Bulkhead and 10' W. of E.Wall	74.3 *	2.1	4th Lift
SG 42	On Drift W. 30 70' S. of Bulkhead and 10' W. of E. Wall	73.7 *	2.1	4th Lift

Control Density: 135.0
ASTM D 1557

Optimum Moisture: 0.0%

Required Compaction: 80%

Densometer ID: 5071

PETTIGREW & ASSOCIATES

*** Does Not Meet Specifications; 3 Moisture Samples taken Per TY; Moistures and Percent Maximum Dry Density were Corrected using Moistures from SG 37, 43 & 48.**

BY: Erica M. Hart

Lab No.: 12 11084-11089

Copies To: Washington TRU Solutions, LLC

BY: for Debra Hicks P.E.

*Corrected Copy 7-11-12

LABORATORY TEST REPORT

PETTIGREW & ASSOCIATES, P.A.

1110 N. GRIMES
HOBBS, NM 88240
(575) 393-9827

AASHTO R18

DEBRA P. HICKS, P.E./L.S.I.
WILLIAM M. HICKS. III, P.E./P.S.

To: Washington TRU Solutions, LLC
4021 NATIONAL PARKS HIGHWAY
P. O. BOX 2078
Carlsbad, NM 8822

Material: ROM Salt

Test Method: ASTM: D 6938

Project: Lab and Field Testing Services for Compacted Salt Testing
Project No. 2012.1112

Date of Test: June 13, 2012

Depth: See Below

Depth of Probe: 6"

Test No.	Location	Dry Density % Max	% Moisture	Depth
SG 43	On Drift W.30 70' S. of Bulkhead and 4' W. of E.Wall	75.3 *	2.1	4th Lift
SG 44	On Drift W.30 80' S. of Bulkhead and 4' W. of E.Wall	74.7 *	2.7	4th Lift
SG 45	On Drift W.30 80' S. of Bulkhead and 10' W. of E.Wall	75.1 *	2.7	4th Lift
SG 46	On Drift W. 30 70' S. of Bulkhead and 10' W. of E. Wall	76.3 *	2.6	4th Lift
SG 47	On Drift W. 30 70' S. of Bulkhead and 5' W. of E. Wall	74.3 *	2.7	4th Lift
SG 48	On Drift W. 30 80' S. of Bulkhead and 5' W. of E.Wall	74.1 *	2.7	4th Lift

Control Density: 135.0
ASTM D 1557

Optimum Moisture: 0.0%

Required Compaction: 80%

Densometer ID: 5071

PETTIGREW & ASSOCIATES

*** Does Not Meet Specifications; 3 Moisture Samples taken Per TY; Moistures and Percent Maximum Dry Density were Corrected using Moistures from SG 37, 43 & 48.**

BY: Erica M. Slaut

Lab No.: 12 11090-11096

Copies To: Washington TRU Solutions, LLC

BY: for Debra Hicks P.E.

LABORATORY TEST REPORT

PETTIGREW & ASSOCIATES, P.A.

1110 N. GRIMES
HOBBS, NM 88240
(575) 393-9827

AASHTO R18

DEBRA P. HICKS, P.E./L.S.I.
WILLIAM M. HICKS. III, P.E./P.S.

To: Washington TRU Solutions, LLC
4021 NATIONAL PARKS HIGHWAY
P. O. BOX 2078
Carlsbad, NM 8822

Material: ROM Salt

Test Method: ASTM: D 6938

Project: Lab and Field Testing Services for Compacted Salt Testing
Project No. 2012.1112

Date of Test: June 18, 2012

Depth: See Below

Depth of Probe: 6"

Test No.	Location	Dry Density % Max	% Moisture	Depth
SG 49	On Drift W. 30 80' S. of Bulkhead and 4' E. of W. Wall	73.3 *	0.4	7th Lift
SG 50	On Drift W. 30 80' S. of Bulkhead and 10' W. of E. Wall	73.6 *	0.3	7th Lift
SG 51	On Drift W.30 80' S. of Bulkhead and 4' W. of E. Wall	74.5 *	0.3	7th Lift

Control Density: 135.0
ASTM D 1557

Optimum Moisture: 0.0%
STD/STAT Trench Corrections 7.8

Required Compaction: 80%

Densometer ID: 5071

*** Does Not Meet Specifications**

PETTIGREW & ASSOCIATES

BY: Erica M. Hart

Lab No.: 12 11261-11264

BY: for Debra Hicks **P.E.**

Copies To: Washington TRU Solutions, LLC

LABORATORY TEST REPORT

PETTIGREW & ASSOCIATES, P.A.

1110 N. GRIMES
HOBBS, NM 88240
(575) 393-9827

AASHTO R18

DEBRA P. HICKS, P.E./L.S.I.
WILLIAM M. HICKS. III, P.E./P.S.

To: Washington TRU Solutions, LLC
4021 NATIONAL PARKS HIGHWAY
P. O. BOX 2078
Carlsbad, NM 8822

Material: ROM Salt

Test Method: ASTM: D 6938

Project: Lab and Field Testing Services for Compacted Salt Testing
Project No. 2012.1112

Date of Test: July 13, 2012

Depth: See Below

Depth of Probe: 6"

Test No.	Location	Dry Density % Max	% Moisture	Depth
SG 78	Bottom Zone	80.5	0.2	Top Zone Lift 19

Control Density: 135.0
ASTM D 1557

Optimum Moisture: 0.0%
STD/STAT Trench Corrections -4.4

Required Compaction: 70-80%

Densometer ID: 5071

PETTIGREW & ASSOCIATES

BY: Erica M Hart

Lab No.: 12 12058

Copies To: Washington TRU Solutions, LLC

BY: for Debra Hicks P.E.

LABORATORY TEST REPORT

PETTIGREW & ASSOCIATES, P.A.

1110 N. GRIMES
HOBBS, NM 88240
(575) 393-9827

AASHTO R18

DEBRA P. HICKS, P.E./L.S.I.
WILLIAM M. HICKS. III, P.E./P.S.

To: Washington TRU Solutions, LLC
4021 NATIONAL PARKS HIGHWAY
P. O. BOX 2078
Carlsbad, NM 8822

Material: ROM Salt

Test Method: ASTM: D 1556 Sand Cone

Project: Lab and Field Testing Services for Compacted Salt Testing
Project No. 2012.1112

Date of Test: June 7, 2012

Depth: See Below

Depth of Probe: N/A

Test No.	Location	Dry Density % Max	% Moisture	Depth
SC 2	On W. 30 Drift 80' S. of Bulkhead and 5' W. of E.Wall (Corresponds to SG 16)	77.9 *	1.2	2nd Lift Depth 6"
SC 3	On W. 30 Drift 70' S. of Bulkhead and 6' W. of E.Wall (Corresponds to SG 19)	72.0 *	1.2	2nd Lift Depth 6"
SC 4	On W. 30 Drift 70' S. and 10' W. of E.Wall (Corresponds to SG 22)	74.1 *	1.1	2nd Lift Depth 6"

Control Density: 135.0
ASTM D 1557

Optimum Moisture: 0.0%

Required Compaction: 85%

Densometer ID: N/A

*** Does Not Meet Specifications**

PETTIGREW & ASSOCIATES

BY: Erica M Hart

Lab No.: 12 10897

Copies To: Washington TRU Solutions, LLC

BY: for Debra Hicks **P.E.**

LABORATORY TEST REPORT

PETTIGREW & ASSOCIATES, P.A.

1110 N. GRIMES
HOBBS, NM 88240
(575) 393-9827

AASHTO R18

DEBRA P. HICKS, P.E./L.S.I.
WILLIAM M. HICKS. III, P.E./P.S.

To: Washington TRU Solutions, LLC
4021 NATIONAL PARKS HIGHWAY
P. O. BOX 2078
Carlsbad, NM 8822

Material: ROM Salt

Test Method: ASTM: D 1556 Sand Cone

Project: Lab and Field Testing Services for Compacted Salt Testing
Project No. 2012.1112

Date of Test: June 11, 2012

Depth: See Below

Depth of Probe: N/A

Test No.	Location	Dry Density % Max	% Moisture	Depth
SC 5	On Drift W. 30 80' S. of Bulkhead and 5' W. of E. Wall (Corresponds to SG 28)	75.7	1.6	3rd Lift Depth 6"

Control Density: 135.0
ASTM D 1557

Optimum Moisture: 0.0%

Required Compaction: 85%

Densometer ID: N/A

PETTIGREW & ASSOCIATES

BY: Erica M Hart

Lab No.: 12 11083

BY: for Debra Hicks **P.E.**

Copies To: Washington TRU Solutions, LLC

APPENDIX D – 2

Appendix D – 2 Contains The Following From Scenario 2;

1. The Laboratory Test Reports For The Nuclear Density Testing Performed On The Lifts Of The Lower Zone

LABORATORY TEST REPORT

PETTIGREW & ASSOCIATES, P.A.

1110 N. GRIMES
HOBBS, NM 88240
(575) 393-9827

AASHTO R18

DEBRA P. HICKS, P.E./L.S.I.
WILLIAM M. HICKS. III, P.E./P.S.

To: Washington TRU Solutions, LLC
4021 NATIONAL PARKS HIGHWAY
P. O. BOX 2078
Carlsbad, NM 8822

Material: ROM Salt

Test Method: ASTM: D 6938

Project: Lab and Field Testing Services for Compacted Salt Testing
Project No. 2012.1112

Date of Test: July 25, 2012

Depth: See Below

Depth of Probe: 6"

Test No.	Location	Dry Density % Max	% Moisture	Depth
SG 85	On Drift W. 30 15' E. of W. Wall and 15' S. of Salt Wall	75.0 *	0.3	4th Lift Bottom Layer
SG 86	On Drift W. 30 15' E. of W.Wall and 8' S. of Salt Wall	73.3 *	0.3	4th Lift Bottom Layer
SG 87	On Drift W. 30 4' W. of E. Wall and 8' S. of Salt Wall	74.6 *	0.3	4th Lift Bottom Layer
SG 88	On Drift W. 30 4' W. of E. Wall and 15' S. of Salt Wall	76.1 *	0.3	4th Lift Bottom Layer
SG 89	On Drift W. 30 15' E. of W.Wall and 15' S. of Salt Wall	77.8 *	0.4	4th Lift Bottom Layer
SG 90	On Drift W. 30 15' E. of W.Wall and 6' S. of Salt Wall	75.9 *	0.0	4th Lift Bottom Layer

Control Density: 135.0
ASTM D 1557

Optimum Moisture: 0.0%
STD/STAT Trench Corrections 12.1

Required Compaction: 70-80%

Densometer ID: 5071

PETTIGREW & ASSOCIATES

BY: Erica M Hart

BY: Debra Hicks P.E.

Lab No.: 12 12612-12617

Copies To: Washington TRU Solutions, LLC

LABORATORY TEST REPORT

PETTIGREW & ASSOCIATES, P.A.

1110 N. GRIMES
HOBBS, NM 88240
(575) 393-9827

AASHTO R18

DEBRA P. HICKS, P.E./L.S.I.
WILLIAM M. HICKS. III, P.E./P.S.

To: Washington TRU Solutions, LLC
4021 NATIONAL PARKS HIGHWAY
P. O. BOX 2078
Carlsbad, NM 8822

Material: ROM Salt

Test Method: ASTM: D 6938

Project: Lab and Field Testing Services for Compacted Salt Testing
Project No. 2012.1112

Date of Test: July 25, 2012

Depth: See Below

Depth of Probe: 6"

Test No.	Location	Dry Density % Max	% Moisture	Depth
SG 91	On Drift W. 30 5' W. of E. Wall and 6' S. of N. Wall	72.6 *	0.2	4th Lift Bottom Layer
SG 92	On Drift W. 30 5' W. of E. Wall and 15' S. of Salt Wall	76.4 *	0.3	4th Lift Bottom Layer
SG 93	On Drift W. 30 15' E. of W. Wall and 12' S. of Salt Wall	74.9 *	0.4	4th Lift Bottom Layer
SG 94	On Drift W. 30 15' E. of W.Wall and 8' S. of Salt Wall	73.9 *	0.3	4th Lift Bottom Layer
SG 95	On Drift W. 30 4' W. of E. Wall and 8' S. of Salt Wall	75.1 *	0.3	4th Lift Bottom Layer
SG 96	On Drift W. 30 4' from E. Wall and 15' S. of N.Wall	76.7 *	0.2	4th Lift Bottom Layer

Control Density: 135.0
ASTM D 1557

Optimum Moisture: 0.0%
STD/STAT Trench Corrections 12.1

Required Compaction: 70-80%

Densometer ID: 5071

PETTIGREW & ASSOCIATES

BY: Erica M Hart

Lab No.: 12 12618-12624

Copies To: Washington TRU Solutions, LLC

BY: for Debra Hicks P.E.

LABORATORY TEST REPORT

PETTIGREW & ASSOCIATES, P.A.

1110 N. GRIMES
HOBBS, NM 88240
(575) 393-9827

AASHTO R18

DEBRA P. HICKS, P.E./L.S.I.
WILLIAM M. HICKS. III, P.E./P.S.

To: Washington TRU Solutions, LLC
4021 NATIONAL PARKS HIGHWAY
P. O. BOX 2078
Carlsbad, NM 8822

Material: ROM Salt

Test Method: ASTM: D 6938

Project: Lab and Field Testing Services for Compacted Salt Testing
Project No. 2012.1112

Date of Test: July 26, 2012

Depth: See Below

Depth of Probe: 6"

Test No.	Location	Dry Density % Max	% Moisture	Depth
SG 97	On Drift W. 30 15' E. of W. Wall and 15' S. of Salt Wall	75.3 *	0.6	On Bottom
SG 98	On Drift W. 30 15' E. of W. Wall and 8' S. of Salt Wall	73.0 *	0.3	On Bottom
SG 99	On Drift W.30 5' W. of E. Wall and 8' S. of Salt Wall	74.1 *	0.5	On Bottom
SG 100	On Drift W. 30 15' S. of Salt Wall and 5' W. of E. Wall	75.0 *	0.4	On Bottom
SG 101	On Drift W. 30 15' E. of W. Wall and 15' S. of Salt Wall	78.3 *	0.5	On Bottom
SG 102	On Drift W. 30 15' E. of W. Wall and 6' S. of Salt Wall	75.0 *	0.5	On Bottom

Control Density: 135.0
ASTM D 1557

Optimum Moisture: 0.0%
STD/STAT Trench Corrections 12.1

Required Compaction: 70-80%

Densometer ID: 5071

PETTIGREW & ASSOCIATES

BY: Erica M. Hart

Lab No.: 12 12625-12630

Copies To: Washington TRU Solutions, LLC

BY: for Debra Hicks P.E.

LABORATORY TEST REPORT

PETTIGREW & ASSOCIATES, P.A.

1110 N. GRIMES
HOBBS, NM 88240
(575) 393-9827

AASHTO R18

DEBRA P. HICKS, P.E./L.S.I.
WILLIAM M. HICKS. III, P.E./P.S.

To: Washington TRU Solutions, LLC
4021 NATIONAL PARKS HIGHWAY
P. O. BOX 2078
Carlsbad, NM 8822

Material: ROM Salt

Test Method: ASTM: D 6938

Project: Lab and Field Testing Services for Compacted Salt Testing
Project No. 2012.1112

Date of Test: July 26, 2012

Depth: See Below

Depth of Probe: 6"

Test No.	Location	Dry Density % Max	% Moisture	Depth
SG 103	On Drift W. 30 6' W. of E. Wall and 8' S. of Salt Wall	75.1 *	0.5	On Bottom
SG 104	On Drift W. 30 6' W. of E. Wall and 15' S. of Salt Wall	73.0 *	0.5	On Bottom
SG 105	On Drift W.30 15' E. of W.Wall and 17' S. of Salt	74.7 *	0.5	On Bottom
SG 106	On Drift W. 30 15' E. of W. Wall and 8' S. of Salt Wall	71.5 *	0.5	On Bottom
SG 107	On Drift W. 30 6' W. of E. Wall and 8' S. of Salt Wall	74.0 *	0.5	On Bottom
SG 108	On Drift W. 30 6' W. of E. Wall and 15' S. of Salt Wall	76.6 *	0.4	On Bottom

Control Density: 135.0
ASTM D 1557

Optimum Moisture: 0.0%
STD/STAT Trench Corrections 12.1

Required Compaction: 70-80%

Densometer ID: 5071

PETTIGREW & ASSOCIATES

BY: Ericam Hart

BY: for Debra Hicks P.E.

Lab No.: 12 12631-12637

Copies To: Washington TRU Solutions, LLC

LABORATORY TEST REPORT

PETTIGREW & ASSOCIATES, P.A.

1110 N. GRIMES
HOBBS, NM 88240
(575) 393-9827

AASHTO R18

DEBRA P. HICKS, P.E./L.S.I.
WILLIAM M. HICKS. III, P.E./P.S.

To: Washington TRU Solutions, LLC
4021 NATIONAL PARKS HIGHWAY
P. O. BOX 2078
Carlsbad, NM 8822

Material: ROM Salt

Test Method: ASTM: D 6938

Project: Lab and Field Testing Services for Compacted Salt Testing
Project No. 2012.1112

Date of Test: July 30, 2012

Depth: See Below

Depth of Probe: See Below

Test No.	Location	Dry Density % Max	% Moisture	Depth
SG 109	On Drift W. 30 15' E. of W.Wall and 15' S. of Salt Wall	74.7 *	0.0	Probe of Depth 5" On Bottom
SG 110	On Drift W. 30 15' E. of W. Wall and 8' S. of Salt Wall	73.1 *	0.1	Probe of Depth 6" On Bottom
SG 111	On Drift W. 30 5' W. of E. Wall and 8' S. of Salt Wall	72.6 *	0.1	Probe of Depth 6" On Bottom
SG 112	On Drift W. 30 5' W. of E. Wall and 15' S. of Salt Wall	74.6 *	0.0	Probe of Depth 6" On Bottom
SG 113	On Drift W. 30 15' E. of W.Wall and 13' S. of Salt Wall	76.6 *	0.0	Probe of Depth 5" On Bottom
SG 114	On Drift W. 30 15' E. of W. Wall and 8' S. of Salt Wall	68.4 *	0.1	Probe of Depth 5" On Bottom

Control Density: 135.0
ASTM D 1557

Optimum Moisture: 0.0%
STD/STAT Trench Corrections 6.3

Required Compaction: 70-80%

Densometer ID: 5071

PETTIGREW & ASSOCIATES

BY: Erica M. Hart

Lab No.: 12 12848-12853

Copies To: Washington TRU Solutions, LLC

BY: for Debra Hicks P.E.

LABORATORY TEST REPORT

PETTIGREW & ASSOCIATES, P.A.

1110 N. GRIMES
HOBBS, NM 88240
(575) 393-9827

AASHTO R18

DEBRA P. HICKS, P.E./L.S.I.
WILLIAM M. HICKS. III, P.E./P.S.

To: Washington TRU Solutions, LLC
4021 NATIONAL PARKS HIGHWAY
P. O. BOX 2078
Carlsbad, NM 8822

Material: ROM Salt

Test Method: ASTM: D 6938

Project: Lab and Field Testing Services for Compacted Salt Testing
Project No. 2012.1112

Date of Test: July 30, 2012

Depth: See Below

Depth of Probe: See Below

Test No.	Location	Dry Density % Max	% Moisture	Depth
SG 115	On Drift W. 30, 6' W. of E. Wall and 8' S. of Salt Wall	72.4 *	0.0	Probe of Depth 5" On Bottom
SG 116	On Drift W. 30 6' W. of E. Wal and 15' S. of Salt Wall	74.5 *	0.0	Probe of Depth 6" On Bottom
SG 117	On Drift W. 30 6' E. of W.Wall and 15' S. of Salt Wall	77.2 *	0.0	Probe of Depth 6" On Bottom
SG 118	On Drift W. 30 15' E. of W.Wall and 8' S. of Salt Wall	75.5 *	0.0	Probe of Depth 6" On Bottom
SG 119	On Drift W.30 5' W. of E. Wall and 8' S. of Salt Wall	72.0 *	0.4	Probe of Depth 6" On Bottom
SG 120	On Drift W. 30 6' W. of E. Wall and 16' S. of Salt Wall	75.0 *	0.7	Probe of Depth 5" On Bottom

Control Density: 135.0
ASTM D 1557

Optimum Moisture: 0.0%
STD/STAT Trench Corrections 6.3

Required Compaction: 70-80%

Densometer ID: 5071

PETTIGREW & ASSOCIATES

BY: Erica M Hart

Lab No.: 12 12854-12860

Copies To: Washington TRU Solutions, LLC

BY: for Debra Hicks P.E.

LABORATORY TEST REPORT

PETTIGREW & ASSOCIATES, P.A.

1110 N. GRIMES
HOBBS, NM 88240
(575) 393-9827

AASHTO R18

DEBRA P. HICKS, P.E./L.S.I.
WILLIAM M. HICKS. III, P.E./P.S.

To: Washington TRU Solutions, LLC
4021 NATIONAL PARKS HIGHWAY
P. O. BOX 2078
Carlsbad, NM 8822

Material: ROM Salt

Test Method: ASTM: D 6938

Project: Lab and Field Testing Services for Compacted Salt Testing
Project No. 2012.1112

Date of Test: July 31, 2012

Depth: See Below

Depth of Probe: 6"

Test No.	Location	Dry Density % Max	% Moisture	Depth
SG 121	On Drift W. 30 15' E. of W. Wall and 15' S. of Salt Wall	74.1 *	0.3	On Bottom 10th Lift
SG 122	On Drift W. 30 15' E. of W. Wall and 8' S. of Salt Wall	72.5 *	0.3	On Bottom 10th Lift
SG 123	On Drift W. 30 8' W. of E. Wall and 8' S. of Salt Wall	70.1 *	0.4	On Bottom 10th Lift
SG 124	On Drift W. 30 8' W. of E. Wall and 15' S.of Salt Wall	73.3 *	0.4	On Bottom 10th Lift
SG 125	On Drift W. 30 15' E. of W. Wall and 16' S. of Salt Wall	76.4 *	0.4	On Bottom 10th Lift
SG 126	On Drift W. 30 15' E. of W. Wall and 6' S. of Salt Wall	74.1 *	0.3	On Bottom 10th Lift

Control Density: 135.0
ASTM D 1557

Optimum Moisture: 0.0%
STD/STAT Trench Corrections 5.1

Required Compaction: 70-80%

Densometer ID: 5071

PETTIGREW & ASSOCIATES

BY: Erica M. Hart

Lab No.: 12 12832-12837

BY: for Debra Hicks **P.E.**

Copies To: Washington TRU Solutions, LLC

LABORATORY TEST REPORT

PETTIGREW & ASSOCIATES, P.A.

1110 N. GRIMES
HOBBS, NM 88240
(575) 393-9827

AASHTO R18

DEBRA P. HICKS, P.E./L.S.I.
WILLIAM M. HICKS. III, P.E./P.S.

To: Washington TRU Solutions, LLC
4021 NATIONAL PARKS HIGHWAY
P. O. BOX 2078
Carlsbad, NM 8822

Material: ROM Salt

Test Method: ASTM: D 6938

Project: Lab and Field Testing Services for Compacted Salt Testing
Project No. 2012.1112

Date of Test: July 31, 2012

Depth: See Below

Depth of Probe: 6"

Test No.	Location	Dry Density % Max	% Moisture	Depth
SG 127	On Drift W. 30 8' S. of Salt Wall and 6' W. of E. Wall	73.8 *	0.5	On Bottom 10th Lift
SG 128	On Drift W. 30 15' S.of Salt Wall and 6' W. of E.Wall	75.7 *	0.5	On Bottom 10th Lift
SG 129	On Drift W. 30 15' E. of W. Wall and 15' S. of Salt Wall	78.1 *	0.4	On Bottom 10th Lift
SG 130	On Drift W. 30 15' E. of W. Wall and 10' S. of Salt Wall	72.1 *	0.3	On Bottom 10th Lift
SG 131	On Drift W. 30 8' W. of E. Wall and 10' S. of Salt Wall	73.9 *	0.4	On Bottom 10th Lift
SG 132	On Drift W. 30 15' S. of Salt Wall and 8' W. of E. Wall	76.9 *	0.4	On Bottom 10th Lift

Control Density: 135.0
ASTM D 1557

Optimum Moisture: 0.0%
STD/STAT Trench Corrections 5.1

Required Compaction: 70-80%

Densometer ID: 5071

PETTIGREW & ASSOCIATES

BY: Erica M Hart

Lab No.: 12 12838-12843

Copies To: Washington TRU Solutions, LLC

BY: Debra Hicks P.E.

APPENDIX E -1

Appendix E – 1 Contains The Following From Scenario 1;

1. The Laboratory Test Reports For The Nuclear Density Testing Performed On The Lifts Of The Upper Zone
2. The Laboratory Test Reports For The Sand-Cone Testing Performed On The Lifts Of The Upper Zone

LABORATORY TEST REPORT

PETTIGREW & ASSOCIATES, P.A.

1110 N. GRIMES
HOBBS, NM 88240
(575) 393-9827

AASHTO R18

DEBRA P. HICKS, P.E./L.S.I.
WILLIAM M. HICKS. III, P.E./P.S.

To: Washington TRU Solutions, LLC
4021 NATIONAL PARKS HIGHWAY
P. O. BOX 2078
Carlsbad, NM 8822

Material: ROM Salt

Test Method: ASTM: D 6938

Project: Lab and Field Testing Services for Compacted Salt Testing
Project No. 2012.1112

Date of Test: June 26, 2012

Depth: See Below

Depth of Probe: 6"

Test No.	Location	Dry Density % Max	% Moisture	Depth
SG 52	On Drift W. 30 5' E. of W. Wall; 4' Below Back	58.4 *	0.9	3rd Lift Upper Zone
SG 53	On Drift W. 30 10' E. of W. Wall; 4' Below Back	62.1 *	1.6	3rd Lift Upper Zone
SG 54	On Drift W. 30 5' W. of E. Wall; 4' Below Back	68.3 *	0.7	3rd Lift Upper Zone

Control Density: 135.0
ASTM D 1557

Optimum Moisture: 0.0%
STD/STAT Trench Corrections -9.7

Required Compaction: 80%

Densometer ID: 5071

*** Does Not Meet Specifications**

PETTIGREW & ASSOCIATES

BY: Erica M. Hart

Lab No.: 12 11871-11873

Copies To: Washington TRU Solutions, LLC

BY: for Debra Hicks P.E.

LABORATORY TEST REPORT

PETTIGREW & ASSOCIATES, P.A.

1110 N. GRIMES
HOBBS, NM 88240
(575) 393-9827

AASHTO R18

DEBRA P. HICKS, P.E./L.S.I.
WILLIAM M. HICKS. III, P.E./P.S.

To: Washington TRU Solutions, LLC
4021 NATIONAL PARKS HIGHWAY
P. O. BOX 2078
Carlsbad, NM 8822

Material: ROM Salt

Test Method: ASTM: D 6938

Project: Lab and Field Testing Services for Compacted Salt Testing
Project No. 2012.1112

Date of Test: June 26, 2012

Depth: See Below

Depth of Probe: 6"

Test No.	Location	Dry Density % Max	% Moisture	Depth
SG 55	On Drift W. 30 5' E. of W. Wall; 5'6" Below Back	60.1 *	2.0	3rd Lift Upper Zone
SG 56	On Drift W. 30 10' E. of W. Wall; 5'6" Below Back	63.9 *	1.2	3rd Lift Upper Zone
SG 57	On Drift W. 30 5' W. of E. Wall; 5'6" Below Back	61.2 *	1.4	3rd Lift Upper Zone

Control Density: 135.0
ASTM D 1557

Optimum Moisture: 0.0%
STD/STAT Trench Corrections -9.7

Required Compaction: 80%

Densometer ID: 5071

*** Does Not Meet Specifications**

PETTIGREW & ASSOCIATES

BY: Erica M Hart

Lab No.: 12 11874-11876

Copies To: Washington TRU Solutions, LLC

BY: for Debra Hicks P.E.

LABORATORY TEST REPORT

PETTIGREW & ASSOCIATES, P.A.

1110 N. GRIMES
HOBBS, NM 88240
(575) 393-9827

AASHTO R18

DEBRA P. HICKS, P.E./L.S.I.
WILLIAM M. HICKS. III, P.E./P.S.

To: Washington TRU Solutions, LLC
4021 NATIONAL PARKS HIGHWAY
P. O. BOX 2078
Carlsbad, NM 8822

Material: ROM Salt

Test Method: ASTM: D 6938

Project: Lab and Field Testing Services for Compacted Salt Testing
Project No. 2012.1112

Date of Test: June 29, 2012

Depth: See Below

Depth of Probe: 6"

Test No.	Location	Dry Density % Max	% Moisture	Depth
SG 60	On Drift W. 30 5' E. of W. Wall; On Bottom Step; 8' Below Back	64.1 *	0.6	7th Lift; Top Zone
SG 61	On Drift W. 30 12' E. of W. Wall; On Bottom Step; 8' Below Back	60.4 *	1.0	7th Lift; Top Zone
SG 62	On Drift W. 30 6' E. of W. Wall; On Middle Step; 6' Below Back	66.8 *	0.8	7th Lift; Top Zone

Control Density: 135.0
ASTM D 1557

Optimum Moisture: 0.0%
STD/STAT Trench Corrections -2.5

Required Compaction: 80%

Densometer ID: 5071

*** Does Not Meet Specifications**

PETTIGREW & ASSOCIATES

BY: Erica M Hart

Lab No.: 12 11882-11884

BY: for Debra Hicks **P.E.**

Copies To: Washington TRU Solutions, LLC

LABORATORY TEST REPORT

PETTIGREW & ASSOCIATES, P.A.

1110 N. GRIMES
HOBBS, NM 88240
(575) 393-9827

AASHTO R18

DEBRA P. HICKS, P.E./L.S.I.
WILLIAM M. HICKS. III, P.E./P.S.

To: Washington TRU Solutions, LLC
4021 NATIONAL PARKS HIGHWAY
P. O. BOX 2078
Carlsbad, NM 8822

Material: ROM Salt

Test Method: ASTM: D 6938

Project: Lab and Field Testing Services for Compacted Salt Testing
Project No. 2012.1112

Date of Test: June 29, 2012

Depth: See Below

Depth of Probe: 6"

Test No.	Location	Dry Density % Max	% Moisture	Depth
SG 63	On Drift W. 30 15' E. of W. Wall; On Middle Step; 6' Below Back	65.1 *	0.7	7th Lift; Top Zone
SG 64	On Drift W. 30 6' E. of W. Wall; On Top Step; 4' Below Back	62.8 *	0.9	7th Lift; Top Zone
SG 65	On Drift W. 30 6' W. of E. Wall; On Top Step; 4' Below Back	66.8 *	1.0	7th Lift; Top Zone

Control Density: 135.0
ASTM D 1557

Optimum Moisture: 0.0%
STD/STAT Trench Corrections -2.5

Required Compaction: 80%

Densometer ID: 5071

*** Does Not Meet Specifications**

PETTIGREW & ASSOCIATES

BY: Erigam Hart

Lab No.: 12 11885-11889

BY: for Debra Hicks **P.E.**

Copies To: Washington TRU Solutions, LLC

LABORATORY TEST REPORT

PETTIGREW & ASSOCIATES, P.A.

1110 N. GRIMES
HOBBS, NM 88240
(575) 393-9827

AASHTO R18

DEBRA P. HICKS, P.E./L.S.I.
WILLIAM M. HICKS. III, P.E./P.S.

To: Washington TRU Solutions, LLC
4021 NATIONAL PARKS HIGHWAY
P. O. BOX 2078
Carlsbad, NM 8822

Material: ROM Salt

Test Method: ASTM: D 6938

Project: Lab and Field Testing Services for Compacted Salt Testing
Project No. 2012.1112

Date of Test: July 10, 2012

Depth: See Below

Depth of Probe: 6"

Test No.	Location	Dry Density % Max	% Moisture	Depth
SG 66	On Drift W. 30 5' E. of W. Wall and 5' Below Back	68.7 *	1.7	Upper Zone Lift 13
SG 67	On Drift W. 30 12' E. of W. Wall and 5' Below Back	72.9 *	1.7	Upper Zone Lift 13
SG 68	On Drift W. 30 4' E. of W. Wall and 4' Below Back	71.3 *	0.9	Upper Zone Lift 13
SG 69	On Drift W. 30 10' E. of W. Wall and 4' Below Back	70.5 *	0.4	Upper Zone Lift 13
SG 70	On Drift W. 30 5' W. of E. Wall and 3' Below Back	67.3 *	0.6	Upper Zone Lift 13
SG 71	On Drift W. 30 10' E. of W. Wall and 3' Below Back	66.0 *	1.5	Upper Zone Lift 13

Control Density: 135.0
ASTM D 1557

Optimum Moisture: 0.0%
STD/STAT Trench Corrections -5.3

Required Compaction: 80%

Densometer ID: 5071

PETTIGREW & ASSOCIATES

*** Does Not Meet Specifications; SG 66 Moisture Invaild used Moisture from SG 67 for Correction**

BY: Erica M Hart

Lab No.: 12 12045-12051

Copies To: Washington TRU Solutions, LLC

BY: for Debra Hicks **P.E.**

LABORATORY TEST REPORT

PETTIGREW & ASSOCIATES, P.A.

1110 N. GRIMES
HOBBS, NM 88240
(575) 393-9827

AASHTO R18

DEBRA P. HICKS, P.E./L.S.I.
WILLIAM M. HICKS. III, P.E./P.S.

To: Washington TRU Solutions, LLC
4021 NATIONAL PARKS HIGHWAY
P. O. BOX 2078
Carlsbad, NM 8822

Material: ROM Salt

Test Method: ASTM: D 6938

Project: Lab and Field Testing Services for Compacted Salt Testing
Project No. 2012.1112

Date of Test: July 13, 2012

Depth: See Below

Depth of Probe: 6"

Test No.	Location	Dry Density % Max	% Moisture	Depth
SG 72	On Drift W. 30 5' E. of W. Wall and 8' Below Back	55.0 *	1.7	Top Zone Lift 19
SG 73	On Drift W. 30 12' E. of W. Wall and 8' Below Back	61.1 *	2.2	Top Zone Lift 19
SG 74	On Drift W. 30 7' E. of W. Wall and 5' Below Back	61.0 *	1.7	Top Zone Lift 19
SG 75	On Drift W. 30 4' W. of E. Wall and 5' Below Back	59.9 *	0.7	Top Zone Lift 19
SG 76	On Drift W. 30 4' E. of W. Wall and 3½' Below Back	60.1 *	1.8	Top Zone Lift 19
SG 77	On Drift W. 30 5' W. of E. Wall and 3½' Below Back	66.4 *	1.6	Top Zone Lift 19

Control Density: 135.0
ASTM D 1557

Optimum Moisture: 0.0%
STD/STAT Trench Corrections -4.4

Required Compaction: 70-80%

Densometer ID: 5071

*** Does Not Meet Specifications**

PETTIGREW & ASSOCIATES

BY: Erica M Hart

Lab No.: 12 12055-12059

BY: Staff for Debra Hicks **P.E.**

Copies To: Washington TRU Solutions, LLC

LABORATORY TEST REPORT

PETTIGREW & ASSOCIATES, P.A.

1110 N. GRIMES
HOBBS, NM 88240
(575) 393-9827

AASHTO R18

DEBRA P. HICKS, P.E./L.S.I.
WILLIAM M. HICKS. III, P.E./P.S.

To: Washington TRU Solutions, LLC
4021 NATIONAL PARKS HIGHWAY
P. O. BOX 2078
Carlsbad, NM 8822

Material: ROM Salt

Test Method: ASTM: D 6938

Project: Lab and Field Testing Services for Compacted Salt Testing
Project No. 2012.1112

Date of Test: July 23, 2012

Depth: See Below

Depth of Probe: 6"

Test No.	Location	Dry Density % Max	% Moisture	Depth
SG 79	On Drift W. 30 4' E. of W. Wall and 10' Below Back	56.4 *	2.1	Upper Zone 32nd Lift
SG 80	On Drift W.30 4' W. of E. Wall and 10' Below Back	54.7 *	2.2	Upper Zone 32nd Lift
SG 81	On Drift W. 30 8' E. of W. Wall and 4½' Below Back	64.6 *	0.6	Upper Zone 32nd Lift
SG 82	On Drift W. 30 4½' W. of E. Wall and 4½' Below Back	60.3 *	1.1	Upper Zone 32nd Lift
SG 83	On Drift W. 30 5' E. of W. Wall and 3' Below Back	61.0 *	1.1	Upper Zone 32nd Lift
SG 84	On Drift W. 30 6' W. of E. Wall and 3' Below Back	60.7 *	0.7	Upper Zone 32nd Lift

Control Density: 135.0
ASTM D 1557

Optimum Moisture: 0.0%
STD/STAT Trench Corrections 6.1

Required Compaction: 70-80%

Densometer ID: 5071

PETTIGREW & ASSOCIATES

BY: Erica M Hart

Lab No.: 12 12825-12831

Copies To: Washington TRU Solutions, LLC

BY: for Debra Hicks P.E.

LABORATORY TEST REPORT

PETTIGREW & ASSOCIATES, P.A.

1110 N. GRIMES
HOBBS, NM 88240
(575) 393-9827

AASHTO R18

DEBRA P. HICKS, P.E./L.S.I.
WILLIAM M. HICKS. III, P.E./P.S.

To: Washington TRU Solutions, LLC
4021 NATIONAL PARKS HIGHWAY
P. O. BOX 2078
Carlsbad, NM 8822

Material: ROM Salt

Test Method: ASTM: D 6938

Project: Lab and Field Testing Services for Compacted Salt Testing
Project No. 2012.1112

Date of Test: July 31, 2012

Depth: See Below

Depth of Probe: 5"

Test No.	Location	Dry Density % Max	% Moisture	Depth
SG 133	On Drift W. 30 6' E. of W. Wall and 6' Below Back	60.8 *	0.9	On Bottom 10th Lift
SG 134	On Drift W. 30 6' W. of E. Wall and 5' Below Back	59.9 *	0.9	On Bottom 10th Lift
SG 135	On Drift W. 30 4' E. of W.Wall and 4' Below Back	56.4 *	0.1	On Bottom 10th Lift

SG 133, 134, and 135 Taken eight days after
SG 79, 80, and 83 respectively

Control Density: 135.0
ASTM D 1557

Optimum Moisture: 0.0%
STD/STAT Trench Corrections 5.1

Required Compaction: 70-80%

Densometer ID: 5071

PETTIGREW & ASSOCIATES

BY: Erica M Hart

BY: for Debra Hicks P.E.

Lab No.: 12 12844-12847

Copies To: Washington TRU Solutions, LLC

LABORATORY TEST REPORT

PETTIGREW & ASSOCIATES, P.A.

1110 N. GRIMES
HOBBS, NM 88240
(575) 393-9827

AASHTO R18

DEBRA P. HICKS, P.E./L.S.I.
WILLIAM M. HICKS. III, P.E./P.S.

To: Washington TRU Solutions, LLC
4021 NATIONAL PARKS HIGHWAY
P. O. BOX 2078
Carlsbad, NM 8822

Material: ROM Salt

Test Method: ASTM: D 1556 Sand Cone

Project: Lab and Field Testing Services for Compacted Salt Testing
Project No. 2012.1112

Date of Test: June 26, 2012

Depth: See Below

Depth of Probe: N/A

Test No.	Location	Dry Density % Max	% Moisture	Depth
SC 6	On Drift W. 30 10' E. of W. Wall; 4' Below Back (Corresponds to SG 53)	67.5	1.5	3rd Lift Upper Zone

Control Density: 135.0
ASTM D 1557

Optimum Moisture: 0.0%

Required Compaction: 80%

Densometer ID: N/A

PETTIGREW & ASSOCIATES

Lab No.: 12 11881

Copies To: Washington TRU Solutions, LLC

BY: Erica M Hart

BY: for Debra Hicks P.E.

LABORATORY TEST REPORT

PETTIGREW & ASSOCIATES, P.A.

1110 N. GRIMES
HOBBS, NM 88240
(575) 393-9827

AASHTO R18

DEBRA P. HICKS, P.E./L.S.I.
WILLIAM M. HICKS. III, P.E./P.S.

To: Washington TRU Solutions, LLC
4021 NATIONAL PARKS HIGHWAY
P. O. BOX 2078
Carlsbad, NM 8822

Material: ROM Salt

Test Method: ASTM: D 1556 Sand Cone

Project: Lab and Field Testing Services for Compacted Salt Testing
Project No. 2012.1112

Date of Test: June 29, 2012

Depth: See Below

Depth of Probe: N/A

Test No.	Location	Dry Density % Max	% Moisture	Depth
SC 7	On Drift W. 30 5' E. of W. Wall; On Bottom Step; 8' Below Back (Corresponds to SG 60)	65.0	0.6	7th Lift; Top Zone

Control Density: 135.0
ASTM D 1557

Optimum Moisture: 0.0%

Required Compaction: 80%

Densometer ID: N/A

PETTIGREW & ASSOCIATES

BY: Erica M Hart

BY: for Debra Hicks **P.E.**

Lab No.: 12 11890

Copies To: Washington TRU Solutions, LLC

LABORATORY TEST REPORT

PETTIGREW & ASSOCIATES, P.A.

1110 N. GRIMES
HOBBS, NM 88240
(575) 393-9827

AASHTO R18

DEBRA P. HICKS, P.E./L.S.I.
WILLIAM M. HICKS. III, P.E./P.S.

To: Washington TRU Solutions, LLC
4021 NATIONAL PARKS HIGHWAY
P. O. BOX 2078
Carlsbad, NM 8822

Material: ROM Salt

Test Method: ASTM: D 1556 Sand Cone

Project: Lab and Field Testing Services for Compacted Salt Testing
Project No. 2012.1112

Date of Test: June 29, 2012

Depth: See Below

Depth of Probe: N/A

Test No.	Location	Dry Density % Max	% Moisture	Depth
SC 8	On Drift W. 30 15' E. of W. Wall; On Middle Step; 6' Below Back (Corresponds to SG 63)	-- *	0.7	7th Lift; Top Zone

Control Density: 135.0
ASTM D 1557

Optimum Moisture: 0.0%

Required Compaction: 80%

Densometer ID: N/A

***Invalid Test. Technician indicated the surface was still sloped, thus the data was erroneous.**

PETTIGREW & ASSOCIATES

Lab No.: 12 11891

BY: Erica M Hurt

Copies To: Washington TRU Solutions, LLC

BY: for Debra Hicks **P.E.**

LABORATORY TEST REPORT

PETTIGREW & ASSOCIATES, P.A.

1110 N. GRIMES
HOBBS, NM 88240
(575) 393-9827

AASHTO R18

DEBRA P. HICKS, P.E./L.S.I.
WILLIAM M. HICKS. III, P.E./P.S.

To: Washington TRU Solutions, LLC
4021 NATIONAL PARKS HIGHWAY
P. O. BOX 2078
Carlsbad, NM 8822

Material: ROM Salt

Test Method: ASTM: D 1556 Sand Cone

Project: Lab and Field Testing Services for Compacted Salt Testing
Project No. 2012.1112

Date of Test: June 29, 2012

Depth: See Below

Depth of Probe: N/A

Test No.	Location	Dry Density % Max		% Moisture	Depth
SC 9	On Drift W. 30 6' W. of E. Wall; On Top Step; 4' Below Back (Corresponds to SG 65)	--	*	1.0	7th Lift; Top Zone

Control Density: 135.0
ASTM D 1557

Optimum Moisture: 0.0%

Required Compaction: 80%

Densometer ID: N/A

***Invalid Test. Technician indicated the surface was still sloped, thus the data was erroneous.**

PETTIGREW & ASSOCIATES

BY: Erica M Hart

Lab No.: 12 11892

BY: for Debra Hicks **P.E.**

Copies To: Washington TRU Solutions, LLC

LABORATORY TEST REPORT

PETTIGREW & ASSOCIATES, P.A.

1110 N. GRIMES
HOBBS, NM 88240
(575) 393-9827

AASHTO R18

DEBRA P. HICKS, P.E./L.S.I.
WILLIAM M. HICKS. III, P.E./P.S.

To: Washington TRU Solutions, LLC
4021 NATIONAL PARKS HIGHWAY
P. O. BOX 2078
Carlsbad, NM 8822

Material: ROM Salt

Test Method: ASTM: D 1556 Sand Cone

Project: Lab and Field Testing Services for Compacted Salt Testing
Project No. 2012.1112

Date of Test: July 10, 2012

Depth: See Below

Depth of Probe: N/A

Test No.	Location	Dry Density % Max	% Moisture	Depth
SC 10	On Drift W. 30 12' E. of W. Wall and 5' Below Back (Corresponds to SG 67)	76.4 *	1.7	Upper Zone Lift 13

Control Density: 135.0
ASTM D 1557

Optimum Moisture: 0.0%

Required Compaction: 80%

Densometer ID: N/A

*** Does Not Meet Specifications**

PETTIGREW & ASSOCIATES

BY: Erica M Hart

BY: for Debra Hicks **P.E.**

Lab No.: 12 12046

Copies To: Washington TRU Solutions, LLC

LABORATORY TEST REPORT

PETTIGREW & ASSOCIATES, P.A.

1110 N. GRIMES
HOBBS, NM 88240
(575) 393-9827

AASHTO R18

DEBRA P. HICKS, P.E./L.S.I.
WILLIAM M. HICKS. III, P.E./P.S.

To: Washington TRU Solutions, LLC
4021 NATIONAL PARKS HIGHWAY
P. O. BOX 2078
Carlsbad, NM 8822

Material: ROM Salt

Test Method: ASTM: D 1556 Sand Cone

Project: Lab and Field Testing Services for Compacted Salt Testing
Project No. 2012.1112

Date of Test: July 10, 2012

Depth: See Below

Depth of Probe: N/A

Test No.	Location	Dry Density % Max	% Moisture	Depth
SC 11	On Drift W. 30 10' E. of W. Wall and 4' Below Back (Corresponds to SG 69)	70.2 *	0.4	Upper Zone Lift 13

Control Density: 135.0
ASTM D 1557

Optimum Moisture: 0.0%

Required Compaction: 80%

Densometer ID: N/A

*** Does Not Meet Specifications**

PETTIGREW & ASSOCIATES

BY: Erica M Hard

BY: for Debra Hicks **P.E.**

Lab No.: 12 12048

Copies To: Washington TRU Solutions, LLC

LABORATORY TEST REPORT

PETTIGREW & ASSOCIATES, P.A.

1110 N. GRIMES
HOBBS, NM 88240
(575) 393-9827

AASHTO R18

DEBRA P. HICKS, P.E./L.S.I.
WILLIAM M. HICKS. III, P.E./P.S.

To: Washington TRU Solutions, LLC
4021 NATIONAL PARKS HIGHWAY
P. O. BOX 2078
Carlsbad, NM 8822

Material: ROM Salt

Test Method: ASTM: D 1556 Sand Cone

Project: Lab and Field Testing Services for Compacted Salt Testing
Project No. 2012.1112

Date of Test: July 10, 2012

Depth: See Below

Depth of Probe: N/A

Test No.	Location	Dry Density % Max	% Moisture	Depth
SC 12	On Drift W. 30 10' E. of W. Wall and 3' Below Back (Corresponds to SG 71)	67.6 *	1.5	Upper Zone Lift 13

Control Density: 135.0
ASTM D 1557

Optimum Moisture: 0.0%

Required Compaction: 80%

Densometer ID: N/A

*** Does Not Meet Specifications**

PETTIGREW & ASSOCIATES

BY: Erica M Hart

BY: for Debra Hicks **P.E.**

Lab No.: 12 12050

Copies To: Washington TRU Solutions, LLC

LABORATORY TEST REPORT

PETTIGREW & ASSOCIATES, P.A.

1110 N. GRIMES
HOBBS, NM 88240
(575) 393-9827

AASHTO R18

DEBRA P. HICKS, P.E./L.S.I.
WILLIAM M. HICKS. III, P.E./P.S.

To: Washington TRU Solutions, LLC
4021 NATIONAL PARKS HIGHWAY
P. O. BOX 2078
Carlsbad, NM 8822

Material: ROM Salt

Test Method: ASTM: D 1556 Sand Cone

Project: Lab and Field Testing Services for Compacted Salt Testing
Project No. 2012.1112

Date of Test: July 23, 2012

Depth: See Below

Depth of Probe: N/A

Test No.	Location	Dry Density % Max	% Moisture	Depth
SC 13	On Drift W. 30 4' E. of W. Wall and 10' Below Back (Corresponds to SG 79)	67.9 *	2.1	Upper Zone 32nd Lift

Control Density: 135.0
ASTM D 1557

Optimum Moisture: 0.0%

Required Compaction: 70-80%

Densometer ID: N/A

*** Does Not Meet Specifications**

PETTIGREW & ASSOCIATES

Lab No.: 12 12825

Copies To: Washington TRU Solutions, LLC

BY: Erica M Hurt

BY: William Debra Hicks P.E.

LABORATORY TEST REPORT

PETTIGREW & ASSOCIATES, P.A.

1110 N. GRIMES
HOBBS, NM 88240
(575) 393-9827

AASHTO R18

DEBRA P. HICKS, P.E./L.S.I.
WILLIAM M. HICKS. III, P.E./P.S.

To: Washington TRU Solutions, LLC
4021 NATIONAL PARKS HIGHWAY
P. O. BOX 2078
Carlsbad, NM 8822

Material: ROM Salt

Test Method: ASTM: D 1556 Sand Cone

Project: Lab and Field Testing Services for Compacted Salt Testing
Project No. 2012.1112

Date of Test: July 23, 2012

Depth: See Below

Depth of Probe: N/A

Test No.	Location	Dry Density % Max	% Moisture	Depth
SC 14	On Drift W. 30 8' E. of W.Wall and 4½' Below Back (Corresponds to SG 81)	62.1 *	0.6	Upper Zone 32nd Lift

Control Density: 135.0
ASTM D 1557

Optimum Moisture: 0.0%

Required Compaction: 70-80%

Densometer ID: N/A

*** Does Not Meet Specifications**

PETTIGREW & ASSOCIATES

Lab No.: 12 12825

Copies To: Washington TRU Solutions, LLC

BY: Erica M Hart

BY: for Debra Hicks **P.E.**

APPENDIX E – 2

Appendix E – 2 Contains The Following From Scenario 2;

1. The Laboratory Test Reports For The Nuclear Density Testing Performed On The Lifts Of The Upper Zone

LABORATORY TEST REPORT

PETTIGREW & ASSOCIATES, P.A.

1110 N. GRIMES
HOBBS, NM 88240
(575) 393-9827

AASHTO R18

DEBRA P. HICKS, P.E./L.S.I.
WILLIAM M. HICKS. III, P.E./P.S.

To: Washington TRU Solutions, LLC
4021 NATIONAL PARKS HIGHWAY
P. O. BOX 2078
Carlsbad, NM 8822

Material: ROM Salt

Test Method: ASTM: D 6938

Project: Lab and Field Testing Services for Compacted Salt Testing
Project No. 2012.1112

Date of Test: August 14, 2012

Depth: See Below

Depth of Probe: 5"

Test No.	Location	Dry Density % Max	% Moisture	Depth
SG 136	On Drift W - 30 3'6" E. of W. Rib and 6'3" from Back	65.1 *	0.3	10th Lift
SG 137	On Drift W - 30 11'2" E. of W. Rib and 6'7" from Back	66.5 *	0.4	10th Lift
SG 138	On Drift W - 30 6'3" E. of W. Rib and 4'6" from Back	64.7 *	0.4	10th Lift
SG 139	On Drift W - 30 13' E. of W. Rib and 4' 3" from Back	65.3 *	0.4	10th Lift
SG 140	On Drift W - 30 3' E. of W. Rib and 2'10" from Back	63.6 *	0.4	10th Lift
SG 141	On Drift W - 30 10' E. of W. Rib and 2'9" from Back	62.1 *	0.4	10th Lift

Control Density: 135.0

Optimum Moisture: 0.0%
STD/STAT Trench Corrections -4.8

Required Compaction: 70-80%

Densometer ID: 5071

*** Does Not Meet Specifications**

PETTIGREW & ASSOCIATES

BY: Erica M. Hart

Lab No.: 12 12954-12960

BY: for Debra Hicks **P.E.**

Copies To: Washington TRU Solutions, LLC

LABORATORY TEST REPORT

PETTIGREW & ASSOCIATES, P.A.

1110 N. GRIMES
HOBBS, NM 88240
(575) 393-9827

AASHTO R18

DEBRA P. HICKS, P.E./L.S.I.
WILLIAM M. HICKS. III, P.E./P.S.

To: Washington TRU Solutions, LLC
4021 NATIONAL PARKS HIGHWAY
P. O. BOX 2078
Carlsbad, NM 8822

Material: ROM Salt

Test Method: ASTM: D 6938

Project: Lab and Field Testing Services for Compacted Salt Testing
Project No. 2012.1112

Date of Test: August 16, 2012

Depth: See Below

Depth of Probe: 6"

Test No.	Location	Dry Density % Max	% Moisture	Depth
SG 142	On Salt wall W-30; 5' E. of the W. wall and 10' below back	55.1 *	0.3	7th Lift
SG 143	On Salt wall W-30; 5' W. of the E. wall and 10' below back	59.0 *	0.4	7th Lift
SG 144	On Salt wall W-30; 6' E. of the W. wall and 8' below back	61.3 *	0.4	7th Lift
SG 145	On Salt wall W-30; 6' W. of the E. wall and 8' below back	63.7 *	0.4	7th Lift
SG 146	On Salt wall W-30; 5' E. of the W. wall and 4' below back	63.6 *	0.4	7th Lift
SG 147	On Salt wall W-30; 6' W. of the E. wall and 4' below back	58.8 *	0.4	7th Lift

Control Density: 135.0
ASTM D: 1557

Optimum Moisture: 0.0%
STD/STAT Trench Corrections -8.7

Required Compaction: 70-80%

Densometer ID: 5071

*** Does Not Meet Specifications**

PETTIGREW & ASSOCIATES

BY:

BY: for Debra Hicks **P.E.**

Lab No.: 12 14022-14028

Copies To: Washington TRU Solutions, LLC

LABORATORY TEST REPORT

PETTIGREW & ASSOCIATES, P.A.

1110 N. GRIMES
HOBBS, NM 88240
(575) 393-9827

AASHTO R18

DEBRA P. HICKS, P.E./L.S.I.
WILLIAM M. HICKS. III, P.E./P.S.

To: Washington TRU Solutions, LLC
4021 NATIONAL PARKS HIGHWAY
P. O. BOX 2078
Carlsbad, NM 8822

Material: ROM Salt

Test Method: ASTM: D 6938

Project: Lab and Field Testing Services for Compacted Salt Testing
Project No. 2012.1112

Date of Test: August 22, 2012

Depth: See Below

Depth of Probe: 6"

Test No.	Location	Dry Density % Max	% Moisture	Depth
SG 148	On Drift W-30 5' E. of W. Wall and 10' below back	60.8 *	0.4	27th Lift on Top Zone
SG 149	On Drift W-30 6' W. of E. Wall and 10' below back	61.7 *	0.3	27th Lift on Top Zone
SG 150	On Drift W-30 6' E. of W.Wall and 7' below back	61.1 *	0.6	27th Lift on Top Zone
SG 151	On Drift W-30 5' W. of E. Wall and 7' below back	63.1 *	0.5	27th Lift on Top Zone
SG 152	On Drift W-30 5' E. of W.Wall and 4' below back	64.1 *	0.5	27th Lift on Top Zone
SG 153	On Drift W-30 5' W. of E. Wall and 4' below back	63.6 *	0.4	27th Lift on Top Zone

Control Density: 135.0
ASTM D: 1557

Optimum Moisture: 0.0%
STD/STAT Trench Corrections -6.0

Required Compaction: 70-80%

Densometer ID: 5071

*** Does Not Meet Specifications**

PETTIGREW & ASSOCIATES

BY: Erica M. Hart

BY: for Debra Hicks P.E.

Lab No.: 12 15116-15122

Copies To: Washington TRU Solutions, LLC

LABORATORY TEST REPORT

PETTIGREW & ASSOCIATES, P.A.

1110 N. GRIMES
HOBBS, NM 88240
(575) 393-9827

AASHTO R18

DEBRA P. HICKS, P.E./L.S.I.
WILLIAM M. HICKS. III, P.E./P.S.

To: Washington TRU Solutions, LLC
4021 NATIONAL PARKS HIGHWAY
P. O. BOX 2078
Carlsbad, NM 8822

Material: ROM Salt

Test Method: ASTM: D 6938

Project: Lab and Field Testing Services for Compacted Salt Testing
Project No. 2012.1112

Date of Test: August 24, 2012

Depth: See Below

Depth of Probe: 6"

Test No.	Location	Dry Density % Max	% Moisture	Depth
SG 154	On Drift W-30 6' E. of W. Wall and 10' below back	61.7 *	0.3	34th Lift on Top Zone
SG 155	On Drift W-30 3' W. of E. Wall and 10' below back	62.1 *	0.2	34th Lift on Top Zone
SG 156	On Drift W-30 6' E. of W. Wall and 7' below back	61.3 *	0.4	34th Lift on Top Zone
SG 157	On Drift W-30 7' W. of E. Wall and 7' below back	64.2 *	0.5	34th Lift on Top Zone
SG 158	On Drift W-30 7' E. of W.Wall and 4' below back	65.3 *	0.4	34th Lift on Top Zone
SG 159	On Drift W-30 5' W. of E. Wall and 4' below back	62.1 *	0.3	34th Lift on Top Zone

Control Density: 135.0
ASTM D: 1557

Optimum Moisture: 0.0%
STD/STAT Trench Corrections 2.2

Required Compaction: 70-80%

Densometer ID: 5071

PETTIGREW & ASSOCIATES

*** Does Not Meet Specifications**

BY: Erica M. Hart

Lab No.: 12 15123-15129

Copies To: Washington TRU Solutions, LLC

BY: for Debra H. Hicks P.E.

APPENDIX E – 3

Appendix E – 3 Contains The Following From Scenario 3;

1. The Laboratory Test Reports For The Nuclear Density Testing Performed On The ROM Salt Placement

LABORATORY TEST REPORT

PETTIGREW & ASSOCIATES, P.A.

100 E. Navajo Drive, Suite 100
HOBBS, NM 88240
(575) 393-9827

AASHTO R18

DEBRA P. HICKS, P.E./L.S.I.
WILLIAM M. HICKS, III, P.E./P.S.

To: Washington TRU Solutions, LLC
4021 NATIONAL PARKS HIGHWAY
P. O. BOX 2078
Carlsbad, NM 8822

Material: ROM Salt

Test Method: ASTM: D 6938

Project: Lab and Field Testing Services for Compacted Salt Testing
Project No. 2012.1112

Date of Test: September 5, 2012

Depth: See Below

Depth of Probe: 6"

Test No.	Location	Dry Density % Max	% Moisture	Depth
SG 160	On Drift W-30 6' E. of W. Wall and 10' below back	64.5 *	0.4	3rd Test Region Lift
SG 161	On Drift W-30 5' W. of E. Wall and 10' below back	63.1 *	0.3	3rd Test Region Lift
SG 162	On Drift W-30 6' E. of W. Wall and 7' below back	68.1 *	0.5	3rd Test Region Lift
SG 163	On Drift W-30 5' W. of E. Wall and 7' below back	67.6 *	0.5	3rd Test Region Lift
SG 164	On Drift W-30 6' E. of W. Wall and 4' below back	64.8 *	0.5	3rd Test Region Lift
SG 165	On Drift W-30 7' W. of E.Wall and 4' below back	64.7 *	0.5	3rd Test Region Lift

Control Density: 135.0
ASTM D: 1557

Optimum Moisture: 0.0%
STD/STAT Trench Corrections 2.2

Required Compaction: 70-80%

Densometer ID: 5071

*** Does Not Meet Specifications**

PETTIGREW & ASSOCIATES

BY:

BY: **P.E.**

Lab No.: 12 15887-15892

Copies To: Washington TRU Solutions, LLC

LABORATORY TEST REPORT

PETTIGREW & ASSOCIATES, P.A.

100 E. Navajo Drive, Suite 100
HOBBS, NM 88240
(575) 393-9827

AASHTO R18

DEBRA P. HICKS, P.E./L.S.I.
WILLIAM M. HICKS. III, P.E./P.S.

To: Washington TRU Solutions, LLC
4021 NATIONAL PARKS HIGHWAY
P. O. BOX 2078
Carlsbad, NM 8822

Material: ROM Salt

Test Method: ASTM: D 6938

Project: Lab and Field Testing Services for Compacted Salt Testing
Project No. 2012.1112

Date of Test: September 7, 2012

Depth: See Below

Depth of Probe: 6"

Test No.	Location	Dry Density % Max	% Moisture	Depth
SG 168	On Drift W-30 5' E. of W. Wall and 10' Below Back	61.6 *	0.3	3rd Test Region Lift
SG 169	On Drift W-30 4' W. of E. Wall and 10' Below Back	65.6 *	0.4	3rd Test Region Lift
SG 170	On Drift W-30 4' E. of W. Wall and 7½' Below Back	65.1 *	0.4	3rd Test Region Lift
SG 171	On Drift W-30 4' W. of E. Wall and 7½ Below Back	63.3 *	0.4	3rd Test Region Lift
SG 172	On Drift W-30 5' E. of W. Wall and 4' Below Back	66.9 *	0.4	3rd Test Region Lift
SG 173	On Drift W-30 3' W. of E. Wall and 4' Below Back	63.0 *	0.4	3rd Test Region Lift

Control Density: 135.0
ASTM D: 1557

Optimum Moisture: 0.0%

Required Compaction: 70-80%

Densometer ID: 5071

*** Does Not Meet Specifications**

PETTIGREW & ASSOCIATES

BY:

Lab No.: 12 15896-15902

Copies To: Washington TRU Solutions, LLC

BY: **P.E.**

LABORATORY TEST REPORT

PETTIGREW & ASSOCIATES, P.A.

1110 N. GRIMES
HOBBS, NM 88240
(575) 393-9827

AASHTO R18

DEBRA P. HICKS, P.E./L.S.I.
WILLIAM M. HICKS. III, P.E./P.S.

To: Washington TRU Solutions, LLC
4021 NATIONAL PARKS HIGHWAY
P. O. BOX 2078
Carlsbad, NM 8822

Material: ROM Salt

Test Method: ASTM: D 6938

Project: Lab and Field Testing Services for Compacted Salt Testing
Project No. 2012.1112

Date of Test: September 10, 2012

Depth: See Below

Depth of Probe: 6"

Test No.	Location	Dry Density % Max	% Moisture	Depth
SG 174	On Drift W-30 WR 6'6" and Back 8'0"	71.7 *	0.3	3rd Region
SG 175	On Drift W-30 WR 13' 6" and Back 8'6"	69.6 *	0.4	3rd Region
SG 176	On Drift W-30 WR 4'0" and Back 5'6"	71.0 *	0.4	3rd Region
SG 177	On Drift W-30 WR 10' 0" and Back 6'0"	73.0 *	0.3	3rd Region
SG 178	On Drift W-30 WR 6'0" and Back 3'0"	70.1 *	0.4	3rd Region
SG 179	On Drift W-30 WR 12'0" and Back 3'0"	69.2 *	0.5	3rd Region

Control Density: 135.0
ASTM D: 1557

Optimum Moisture: 0.0%
STD/STAT 3170/511

Required Compaction: 70-80%

Densometer ID: 5071

*** Does Not Meet Specifications**

PETTIGREW & ASSOCIATES

BY: Erwin Martinez

BY: for Debra Hicks **P.E.**

Lab No.: 12 15821-15827

Copies To: Washington TRU Solutions, LLC

APPENDIX F – 1

Appendix F - 1 Contains The Following From Scenario 1;

1. The Summary Sheets For The Lower Lift Placement, Compaction And Down Time
2. The Summary Sheets For The Upper Lift Placement, Compaction And Down Time
3. The Summary Sheet For The Lower And Upper Lift Moisture/Density Data

Scenario: 1

Test Region: 1

Time

Lift #	Emplacement Time	Water Time	Compaction Time 2 Passes	Compaction Time 4 Passes	Compaction Time 6 Passes	Upper Zone Compaction Time	Down Time	Total Time
1	150	4	31	18	18		25	246
2	180	3	17	18	19		45	282
3	150	3	16	18	19		15	221
4	91	3	14	17	15			140
5	83	3	16	18	14			134
6	92	3	14	11	14			134
7	178	3	16	16	13		50	276
				Lower Zone Total Time (Hr) = 23.9				
				Lower Zone Total Time Without Down Time (Hr) = 21.65				
				Average Cubic Foot Per Hour = 181				
							*Time In Minutes	

Scenario: 1

Test Region: 1

Time

Lift #	Emplacement Time	Water Time	Compaction Time 2 Passes	Compaction Time 4 Passes	Compaction Time 6 Passes	Upper Zone Compaction Time	Down Time	Total Time
1	15	1				85	30	131
2	8	1				100	141	250
3	12	1				79		92
4	15	1				60	90	166
5	9	1				62		72
6	15	1				80		96
7	15	1				68		84
8	13	1				63	30	107
9	11	1				60		72
10	16	1				45		62
11	19	1				47	60	127
12	13	1				33		47
							*Time In Minutes	

Scenario: 1

Test Region: 1

Time

Lift #	Emplacement Time	Water Time	Compaction Time 2 Passes	Compaction Time 4 Passes	Compaction Time 6 Passes	Upper Zone Compaction Time	Down Time	Total Time
13	14	1				45		60
14	13	1				66	45	125
15	15	1				60		76
16	10	1				75		86
17	13	1				46		60
18	14	1				60		75
19	10	1				55		66
20	15	1				60	120	196
21	11	1				64		76
22	9	1				46		56
23	13	1				40		54
24	15	1				45		61
							*Time In Minutes	

Scenario: 1

Test Region: 1

Time

Lift #	Emplacement Time	Water Time	Compaction Time 2 Passes	Compaction Time 4 Passes	Compaction Time 6 Passes	Upper Zone Compaction Time	Down Time	Total Time
25	14	1				50		65
26	15	1				53	30	99
27	14	1				48		63
28	13	1				52		66
29	13	1				54		68
30	11	1				45		57
31	11	1				48		60
32	15	1				60		76
				Upper Zone Total Time (Hr) = 47.5				
				Upper Zone Total Time Without Down Time (Hr) = 38.4				
				Averae Cubic Foot Per Hour = 162				
							*Time In Minutes	

AVERAGE

Scenario: 1

Test Region: 1

Date	Lift #	Compactor Type	Avg. Compactor Speed (ft/min)	Cumulative Number of Compaction (No. of Passes)	Maximum Density %	Minimum Density %	Avg. Wet Density %	Avg. Moisture %	Avg. Dry Density %
6/5/12-6/15/12	1 - 7	ROLLER	132.28	2	77.4	71.8	75.1	1.6	74.1
6/5/12-6/15/12	1 - 7	ROLLER	141.31	4	76.6	72.4	75.8	1.7	74.5
6/5/12-6/15/12	1 - 7	ROLLER	148.12	6	78.2	73.3	76.0	1.4	74.8
UPPER ZONE									
6/26/12-6/29/12	3-7	PUSHPLATE W/VIBRATION		1	68.3	58.4	64.1	1.1	63.3
7/10/12-7/11/12	13-32	PUSHPLATE W/O VIBRATION		1	72.6	54.6	64.2	1.4	63.3
	3' From Back				68.3	58.4	64.1	1.2	63.4
	5' From Back				72.9	59.9	65.4	1.3	64.6
	7' From Back				68.7	54.7	62.5	1.4	61.5

APPENDIX F – 2

Appendix F - 2 Contains The Following From Scenario 2;

1. The Summary Sheets For The Lower Lift Placement, Compaction And Down Time
2. The Summary Sheets For The Upper Lift Placement, Compaction And Down Time
3. The Summary Sheet For The Lower And Upper Lift Moisture/Density Data

Lower Zone

Scenario: 2

Test Region: 2

Time

Time in minutes unless otherwise noted:

Lift #	Emplacement Time	Water Time	Compaction Time 2 Passes	Compaction Time 4 Passes	Compaction Time 6 Passes	Upper Zone Compaction Time	Down Time	Total Time
1	45	0	10	6	6	N/A	0	67
2	37					N/A	0	61
3						N/A		
4		0	7	9	7	N/A	0	61
5	40	0				N/A	0	64
6			8	11	9	N/A		66
7	31					N/A		55
8		0	8	8	9	N/A	0	63
9						N/A		
10		0	7	9	7	N/A	0	61
Avg.	38	0	8	9	8	N/A	0	62
*segment averages used to fill missing data								
				Lower Zone Total Time (Hr)* = 10.3				
				Lower Zone Total Time Without Down Time (Hr)* = 10.3				
				Average Cubic Foot Per Hour = 283				

Lower Zone

Scenario: 2

Test Region: 2

Time
Page 2 of 3

Time in minutes unless otherwise noted:

Lift #	Emplacement Time	Water Time	Compaction Time 2 Passes	Compaction Time 4 Passes	Compaction Time 6 Passes	Upper Zone Compaction Time	Down Time	Total Time
1	29	0	N/A	N/A	N/A	63	0	92
2	13	0	N/A	N/A	N/A	36	0	49
4	10	0	N/A	N/A	N/A	70	0	80
5	5	0	N/A	N/A	N/A	55	0	60
6	10	0	N/A	N/A	N/A	65	0	75
7	10	0	N/A	N/A	N/A	35	0	45
13		0	N/A	N/A	N/A	23	0	36
14	9	0	N/A	N/A	N/A	27	0	36
15	27	0	N/A	N/A	N/A	32	10	69
16	15	0	N/A	N/A	N/A		0	15
18			N/A	N/A	N/A		0	45
19			N/A	N/A	N/A		0	55
20	25	0	N/A	N/A	N/A	41	0	66
21		0	N/A	N/A	N/A		0	50
22		0	N/A	N/A	N/A		0	35
23		0	N/A	N/A	N/A		0	38
24	12	0	N/A	N/A	N/A	32	0	44
25	8	0	N/A	N/A	N/A	40	0	48

Lower Zone

Scenario: 2

Test Region: 2

Time

Time in minutes unless otherwise noted:

Lift #	Emplacement Time	Water Time	Compaction Time 2 Passes	Compaction Time 4 Passes	Compaction Time 6 Passes	Upper Zone Compaction Time	Down Time	Total Time
26	6	0	N/A	N/A	N/A		0	49
28		0	N/A	N/A	N/A		0	48
29		0	N/A	N/A	N/A		0	48
30		0	N/A	N/A	N/A		0	49
31		0	N/A	N/A	N/A	43	0	43
32	11	0	N/A	N/A	N/A	43	0	54
33	8	0	N/A	N/A	N/A	42	0	50
34		0	N/A	N/A	N/A		0	40
35		0	N/A	N/A	N/A		0	42
36		0	N/A	N/A	N/A		0	28
38		0	N/A	N/A	N/A		0	35
39	7	0	N/A	N/A	N/A	37	0	44
40	8	0	N/A	N/A	N/A		0	51
Avg.	13					43	0	49
*segment averages used to fill missing data								
				Upper Zone Total Time (Hr)* = 32.7				
				Upper Zone Total Time Without Down Time (Hr) = 32.5				
				Average Cubic Foot Per Hour = 239				

AVERAGE

Scenario: 2

Test Region: 2

Date	Lift #	Compactor Type	Avg. Compactor Speed (ft/min)	Cumulative Number of Compaction (No. of Passes)	Maximum Density %	Minimum Density %	Avg. Wet Density %	Avg. Moisture %	Avg. Dry Density %
Roller Compactor									
7/25/12-7/26/12	1 - 6	ROLLER	98	2	76.1	73.0	75.0	0.4	74.6
7/25/12-7/26/12	1 - 6	ROLLER	73.5	4	78.3	72.6	76.4	0.4	75.5
7/25/12-7/26/12	1 - 6	ROLLER	100.2	6	77.3	71.5	75.8	0.4	74.7
LHD - Empty Bucket									
7/26/12- 7/30/12	7 - 8	LHD	93.5	2	74.7	72.6	73.8	0.1	73.8
7/26/12- 7/30/13	7 - 8	LHD	93.5	4	76.6	68.4	73.0	0.0	73.0
7/26/12- 7/30/14	7 - 7	LHD	83.1	6	77.2	72.0	74.9	0.3	74.9
LHD - Full Bucket									
7/30/12-7/31/12	9 - 10	LHD	95.0	2	74.1	70.1	72.5	0.4	72.5
7/30/12-7/31/13	9 - 10	LHD	83.1	4	76.4	73.8	75.4	0.4	75.0
7/30/12-7/31/14	9 - 10	LHD	95.0	6	78.1	76.9	75.6	0.4	75.3
UPPER ZONE									
8/8/12-8/24/12	1 - 40	PUSHPLATE W/O VIBRATION		1	66.5	55.1	62.7	0.4	62.5
Distance From Back									
	3' From Back				65.3	58.8	63.1	0.4	62.9
	5' From Back				65.3	61.1	63.4	0.5	63.1
	7' From Back				66.5	55.1	61.7	0.3	61.5

APPENDIX F - 3

Appendix F – 3 Contains The Following From Scenario 3;

1. The Summary Sheets For ROM Salt Placement And Down Time
2. The Summary Sheet For The Moisture/Density Data

Scenario 3

Test Region 3

Time
Page 1 of 3

Lift #	Emplacement Time	Water Time	Compaction Time 2 Passes	Compaction Time 4 Passes	Compaction Time 6 Passes	Upper Zone Compaction Time	Down Time	Total Time
1	6	N/A	N/A	N/A	N/A	N/A	0	6
2	82	N/A	N/A	N/A	N/A	N/A	0	82
3	37	N/A	N/A	N/A	N/A	N/A	0	37
4	33	N/A	N/A	N/A	N/A	N/A	0	33
5	33	N/A	N/A	N/A	N/A	N/A	0	33
6	29	N/A	N/A	N/A	N/A	N/A	0	30
7	29	N/A	N/A	N/A	N/A	N/A	0	30
8	31	N/A	N/A	N/A	N/A	N/A	5	36
9	20	N/A	N/A	N/A	N/A	N/A	0	20
				Zone total time (hr) =14.5				
				Zone total time without down time (hr) = 14.1				
				Average cubic foot per hour = 690				

Scenario 3

Test Region 3

Time

Lift #	Emplacement Time	Water Time	Compaction Time 2 Passes	Compaction Time 4 Passes	Compaction Time 6 Passes	Upper Zone Compaction Time	Down Time	Total Time
10	21	N/A	N/A	N/A	N/A	N/A	0	21
11	22	N/A	N/A	N/A	N/A	N/A	0	22
12	22	N/A	N/A	N/A	N/A	N/A	0	22
13	25	N/A	N/A	N/A	N/A	N/A	0	25
14	21	N/A	N/A	N/A	N/A	N/A	12	33
15	41	N/A	N/A	N/A	N/A	N/A	0	41
16	39	N/A	N/A	N/A	N/A	N/A	0	39
17	39	N/A	N/A	N/A	N/A	N/A	0	39
18	34	N/A	N/A	N/A	N/A	N/A	0	34
19	19	N/A	N/A	N/A	N/A	N/A	7	26

Scenario 3

Test Region 3

Time

Lift #	Emplacement Time	Water Time	Compaction Time 2 Passes	Compaction Time 4 Passes	Compaction Time 6 Passes	Upper Zone Compaction Time	Down Time	Total Time
20	25	N/A	N/A	N/A	N/A	N/A	0	25
21	27	N/A	N/A	N/A	N/A	N/A	0	27
22	24	N/A	N/A	N/A	N/A	N/A	0	24
23	28	N/A	N/A	N/A	N/A	N/A	0	28
24	44	N/A	N/A	N/A	N/A	N/A	0	44
25	27	N/A	N/A	N/A	N/A	N/A	0	27
26	21	N/A	N/A	N/A	N/A	N/A	0	21
27	20	N/A	N/A	N/A	N/A	N/A	0	20
28	24	N/A	N/A	N/A	N/A	N/A	0	24
29	23	N/A	N/A	N/A	N/A	N/A	0	23

AVERAGE

Scenario: 3

Test Region: 3

Date	Lift #	Compactor Type	Avg. Compactor Speed (ft/min)	Cumulative Number of Compaction (No. of Passes)	Maximum Density %	Minimum Density %	Avg. Wet Density %	Avg. Moisture %	Avg. Dry Density %
9/4/12 - 9/5/12	1 - 5	N/A	N/A	N/A	68.1	63.1	65.8	0.5	65.5
9/5/12 - 9/7/12	6 -17	N/A	N/A	N/A	66.9	61.6	64.0	0.4	64.3
9/7/12 - 9/8/12	18 - 29	N/A	N/A	N/A	73.0	69.2	70.4	0.4	70.8
	3' From Back				70.1	63.0	66.7	0.5	66.5
	5' From Back				73.0	63.3	68.2	0.4	68.0
	8' From Back				71.7	63.1	65.2	0.4	66.0

APPENDIX G

Appendix G Contains The Following;

1. The Data Sheet For The Walk-Behind Vibratory Roller Compactor Used To Compact The Lower Lifts
2. The Data Sheet For The LHD Used To Place The Lower And Upper Lifts
3. The Data Sheet For The Fletcher Scaler Used To Pushup And Compact Upper Zone Lifts

RD 7H-ES Double Drum Vibratory Roller

Item Number: 0009408

Description	Metric		Imperial	
Length x width x height (handle in working position)	2631 x 697.9 x 1166	mm	103.6 x 27.48 x 45.9	in
Length x width x height (guide handle in transport position)	1226.8 x 697.9 x 2215	mm	48.3 x 27.48 x 87.2	in
Shipping size	1473 x 914 x 2311	mm	58 x 36 x 91	in
Dry Weight	772.5	kg	1703	lb
Operating weight	829.6	kg	1829	lb
Shipping weight (including packaging)	795.1	kg	1753	lb
Drum width	650	mm	25.5	in
Drum diameter	420	mm	16.52	in
Curb clearance (R/L)	233.7 / 233.7	mm	9.2 / 9.2	in
Side clearance (R/L)	29.5 / 29.5	mm	1.16 / 1.16	in
Water tank capacity	53	l	14	US gal
Sprinkling system	gravity fed		gravity fed	
Engine Type	Hatz, diesel			
Fuel type	Diesel		Diesel	
Starting system	Electric Start or Hand crank		Electric Start or Hand crank	
Displacement	445	cm^3	27.2	in^3
Max. Rated Power at Rated Speed*	6.1 kW at 2600 rpm		8.2 hp at 2600 rpm	
Power Rating Specification	ISO 3046/1 IFN		ISO 3046/1 IFN	
Operating speed	2600	1/min	2600	rpm
Fuel consumption	1.63	l/h	.43	US gal/h
Fuel tank capacity	5	l	1.3	US gal
Hydraulic tank capacity	30	l	8	US gal
Dynamic (centrifugal) force	13	kN	2921.5	lbf
Frequency	55	Hz	3300	vpm
Static linear force per drum (f/r)	5.01 / 7.51	N/mm	28.69 / 43.04	lb/in
Dynamic linear force per drum (f/r)	10.03 / 10.03	N/mm	57.28 / 57.28	lb/in
Total linear force per drum (f/r)	15.04 / 17.54	N/mm	85.97 / 100.32	lb/in
Static weight per drum (f/r)	331.8 / 497.8	kg	731.6 / 1097.4	lb
Variable speeds - Forward	0-4.0	km/h	0-2.5	mph
Variable speeds - Forward	0-67	m/min	0-220	ft/min
Variable speeds - Reverse	0-2.0	km/h	0-1.2	mph
Variable speeds - Reverse	0-32	m/min	0-105	ft/min
Gradeability without vibration	40	%	40	%

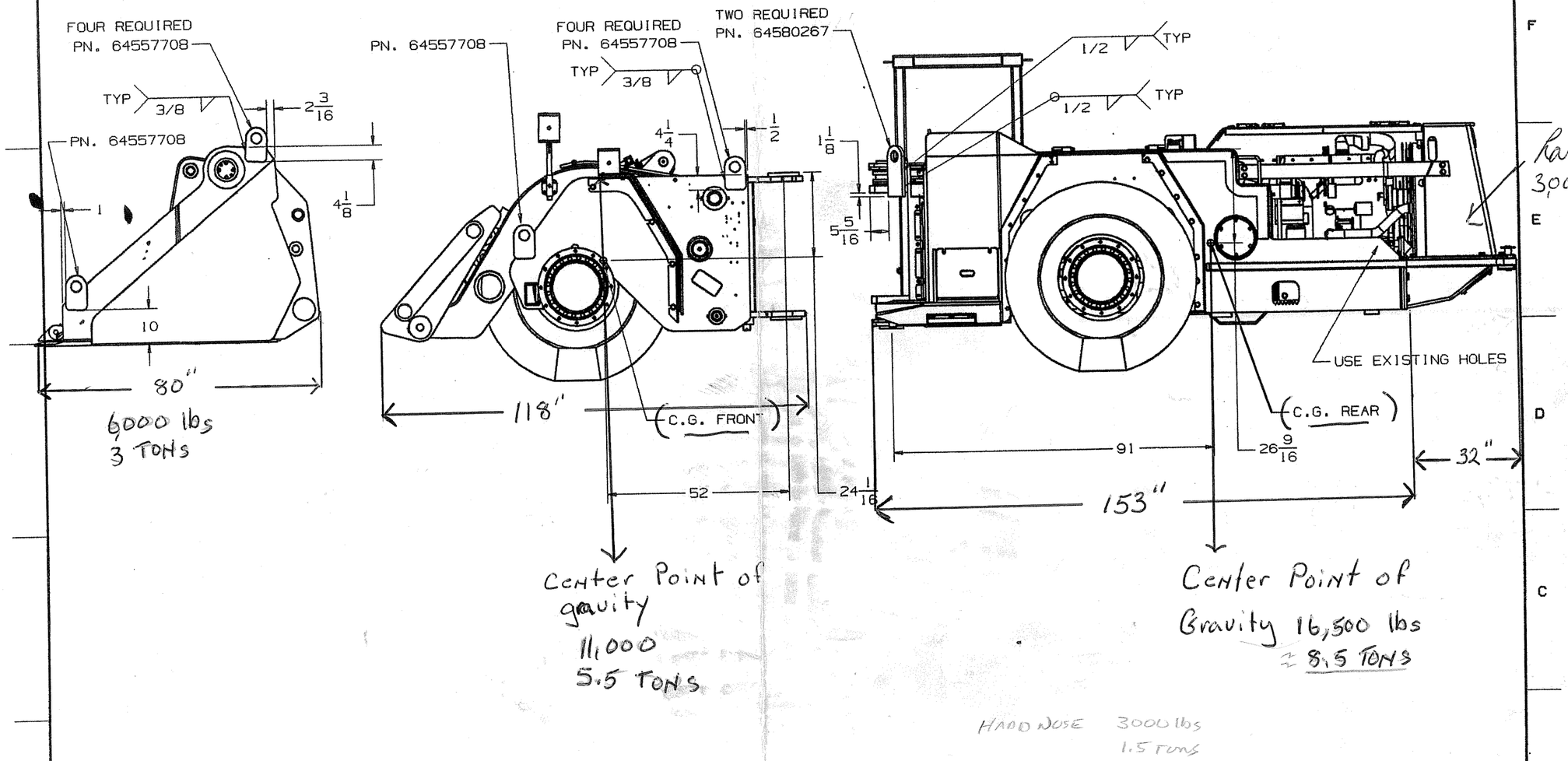

HARD NOSE 3000 lbs
1.5 TONS

REV.	BY	DATE	ECN No.	DESCRIPTION OF CHANGES IN REVISION	No OF CHGS
0	-	29/03/06	-	(null)	

PRODUCT LINE: EJC-LOADERS	TOLERANCES UNLESS OTHERWISE SPECIFIED		DIMENSIONS IN INCHES
MATERIAL:	FRACTIONAL ±1/16	DECIMAL .X ±.06 .XX ±.03 .XXX ±.01	
(null)	ANGLES ±1.0		
-	145		
-	-		
HEAT TREATMENT:	-		
-	-		
WELD STANDARDS: ALL WELDS	-		
TO COMPLY TO CSA W47.1/W59	-		
SURFACE TREATMENT:	HIGHER LEVEL: -		WEIGHT -
-	SIMILAR TO: -		

EJC MINING EQUIPMENT

NOTICE!
THIS DOCUMENT IS THE EXCLUSIVE PROPERTY OF EJC MINING EQUIPMENT INC AND IT MUST BE RETURNED ON REQUEST. THIS DOCUMENT MUST NOT BE COPIED, REPRODUCED, DISCLOSED TO ANY THIRD PARTY OR USED IN MANUFACTURE OF SUBJECT MATTER THEREOF WITHOUT THE PRIOR WRITTEN CONSENT OF EJC MINING EQUIPMENT INC

DRAWN BY: WST	DATE: 29/03/06
CHECKED BY: PB	DATE: 29/03/06
APPROVED BY: PB	DATE: 29/03/06
SHT 1 OF 1	DWG. NO. 64580263

EJCDH-III UNIGRAPHICS

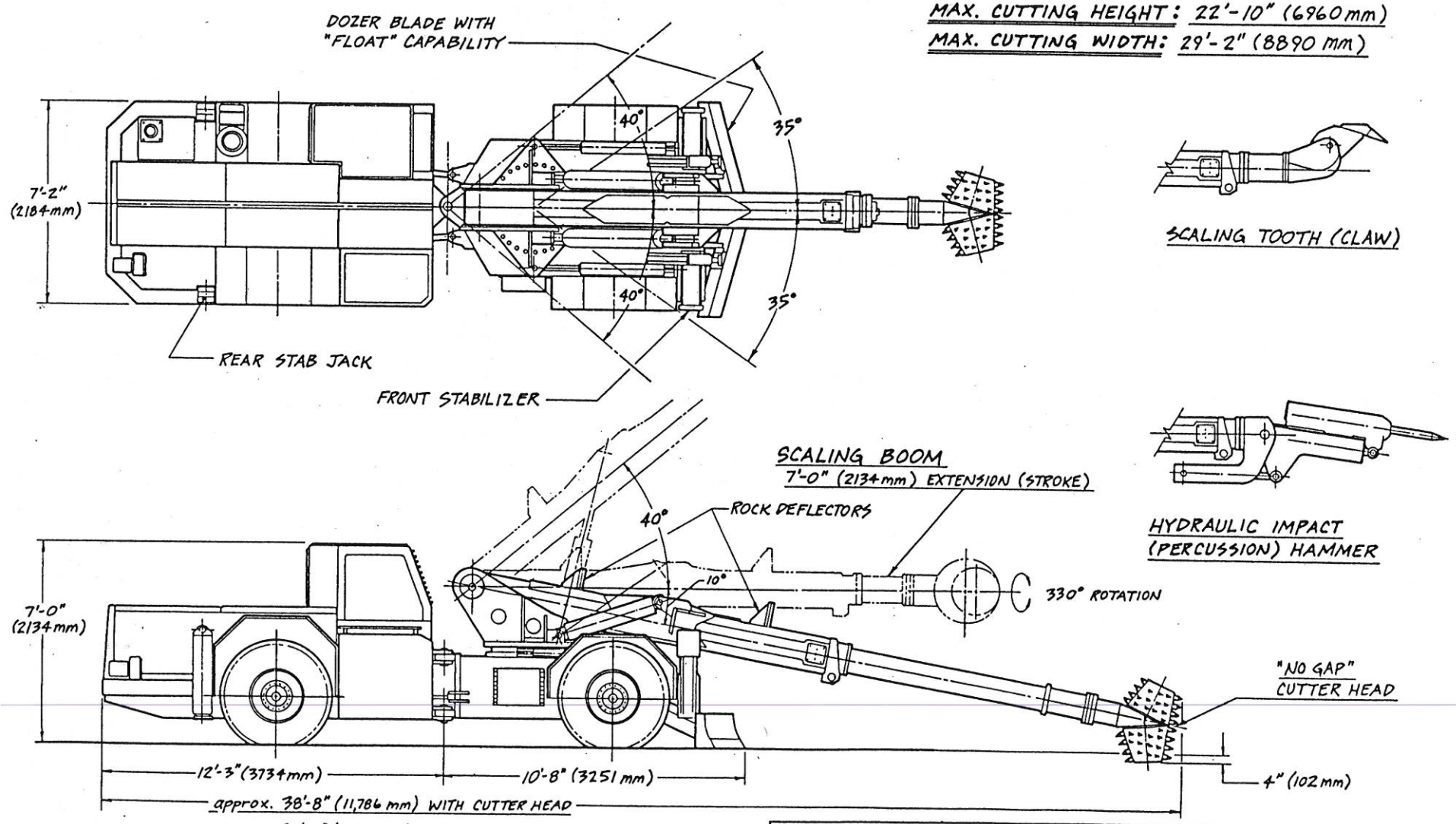

This drawing in design and detail is our property and must not be used except in connection with our work. All rights of design or invention are reserved. This print is our property and is loaned subject to return upon demand and upon the expressed condition that it will not be used directly or indirectly in any manner detrimental to our interest. This print or copies thereof must not be made available to third parties without our written permission. Violation of the above conditions will result in legal prosecution.

Tolerances unless otherwise specified
Fractions ± ——
Dec. .XX ± ——
Dec. .XXX ± ——
Angles ± ——

Remarks: H1T-NG
SV-40/11-2

Alpine
EQUIPMENT CORPORATION
P.O. Box 767
State College, PA 16804, USA
Telephone (814) 234-6854
Telex 84-2556
FAX (814) 355-9794

"NO GAP" TRANSVERSE CUTTER HEAD ON DIESEL-POWERED SCALER

SCALE 1:40 | DWN JLL 8/88 | CKD WJK

AL-1157