Waste Isolation Pilot Plant Documented Safety Analysis

Prepared by
Nuclear Waste Partnership LLC Carlsbad, NM
U.S. Department of Energy Contract DE-EM0001971

Prepared for:
U.S. Department of Energy Carlsbad Field Office Carlsbad, NM

APRIL 2016

This document revision was prepared by Nuclear Waste Partnership LLC under contract and subject to the warranty and other obligations of that contract.

Release to and Use by Third Parties. As it pertains to releases of this document to third parties, and the use of or reference to this document by such third parties in whole or in part, neither Nuclear Waste Partnership LLC, nor its officers, directors, employees, agents, consultants, or personal services contractors (i) make any warranty, expressed or implied; (ii) assume any legal liability or responsibility for the accuracy, completeness, or usefulness, of any information, apparatus, product or process disclosed herein; or (iii) represent that use of the same will not infringe privately owned rights. Reference herein to any specific commercial product, process, or service by trademark, name, manufacture, or otherwise does not necessarily constitute or imply endorsement, recommendation, or favoring of the same by either Nuclear Waste Partnership LLC, or its officers, directors, employees, agents, consultants, or personal services contractors.

E.1 EXECUTIVE SUMMARY

This Documented Safety Analysis (DSA) is written for the U.S. Department of Energy (DOE) Waste Isolation Pilot Plant (WIPP). The purpose of this document is to demonstrate an acceptable level of safety in compliance with the *Code of Federal Regulations*, Title 10, part 830 (10 CFR 830), "Nuclear Safety Management." Subpart B, Section 830.202, "Safety Basis Requirements," Subsection (a) requires that the contractor responsible for a Hazard Category 1, 2, or 3 DOE nuclear facility must establish and maintain the safety basis of the facility. The WIPP facility is categorized as a Hazard Category 2 DOE Nonreactor Nuclear Facility for all surface and Underground (UG) operations. This revision of the DSA replaces the previous Safety Basis documentation (i.e., Revision 4 of the DSA and all existing Evaluations of the Safety of the Situation). Upon implementation of this Revision 5b of the DSA, Revision 4 and all Evaluations of the Safety of the Situation are superseded.

In accordance with 10 CFR 830, Subpart A, independent quality assurance (QA) assessments are used on an ongoing basis in support of nuclear operations at the WIPP facility to ensure the adequate and effective implementation of requirements set forth in the DSA. Independent QA oversight is integrated with the application of Safety Management Systems to support nuclear safety in WIPP operations.

The "safe harbor" methodology followed for preparation of this DSA to demonstrate compliance with 10 CFR 830 was *Preparation of Nonreactor Nuclear Facility Documented Safety Analysis* (DOE-STD-3009-2014) and the supplemental guidance specific to Transuranic (TRU) Waste processing facilities given in *Preparation of Safety Basis Documents for Transuranic (TRU) Waste Facilities* (DOE-STD-5506-2007). This DSA addresses the hazards and the controls necessary to provide adequate protection to the public, workers, and the environment with regard to those hazards.

Changes between Revision 4 and Revision 5b include:

- Revisions associated with the Conclusions and Judgments of Need from the Accident Investigation Board (AIB) Reports and required by the conversion to the DOE-STD-3009-2014 DSA format. The Phase I and Phase II AIB reports (*U.S. Department of Energy Accident Investigation Report, Phase 1 Radiological Release Event at the Waste Isolation Pilot Plant on February 14, 2014* and *U.S. Department of Energy Accident Investigation Report, Phase 2 Radiological Release Event at the Waste Isolation Pilot Plant on February 14, 2014*) have been reviewed to ensure that the Conclusions and Judgments of Need associated with the content of the safety envelope have been addressed. In particular, Judgments of Need 3, 4, 5, 6, and 7 from the April 2014 WIPP Phase I AIB report are reflected in the content of the DSA.
- The remote-handled (RH) TRU process is not being authorized under Revision 5b of the DSA as this activity will not be implemented as part of contact-handled (CH) waste emplacement restart. While the RH process has been included in the hazard analysis (HA) and consequence calculations, together with partial descriptions in various sections of the DSA, the RH process did not drive any of the required safety significant controls. Future authorization of the RH TRU process will require revalidation of the RH analysis and must include a resolution for the vulnerabilities of the RH crane in a seismic event and other comments on the RH hazard evaluations.
- The statistical approach to material at risk (MAR) recommended by DOE-STD-5506-2007 has been adopted for establishing unmitigated dose consequences for events involving multiple Waste Containers.
- Fire scenarios have been revised based on the forensic analyses of the February 5 and 14, 2014, events, and address propagating fires.

- Per Option 3 of Section 3.2.4.2, “Radiological Dose Consequence,” of DOE-STD-3009-2014, the WIPP-specific radiological dose consequence methods and parameters were defined in a modeling protocol and approved by DOE Carlsbad Field Office (CBFO) in September, 2015.
- Dose analysis for co-located workers at 100 meters uses the same methodology as approved for use with the Maximally Exposed Offsite Individual (MOI) for releases from the UG and for releases from the Waste Handling Building (WHB) in which the WHB is assumed to collapse. Co-located Worker doses are calculated using the recommended atmospheric dilution factor χ/Q for releases from the WHB in which the WHB remains largely intact such that the building wake effect inherent in this dilution factor is applicable.
- Updating of the following Initial Conditions (ICs), design features (DFs), and controls:
  - A variety of modifications to vehicle-related controls in the UG, WHB, and Outside Area have been implemented and Vehicle Barriers and Alternative Barrier Provisions have been credited.
  - The Underground Ventilation System (UVS) is now credited as a Safety Significant (SS) control.
  - The Battery Exhaust System is now included within the CH Waste Handling (WH) Confinement Ventilation System (CVS).
  - WHB FSS now requires both the diesel and electric pump to be operable.
  - The Waste Hoist Support Structure is now credited as a DF.
  - The WIPP Waste Acceptance Criteria (WAC) are now credited as an IC, replacing a number of former initial assumptions.
  - The Panel 6 and Panel 7, Room 7 Closure Bulkheads are now credited as DFs due to known noncompliant containers in those areas and Real-Time Monitoring at Panel 6 and Panel 7 Isolation Bulkheads Specific Administrative Control (SAC) has been created.
  - An explicit requirement that TRU Waste Containers be in closed Type B shipping packages when aboveground outside the WHB has been added.
  - The RH and CH shipping packages (Type B Packages) are now credited.
  - The location of the UG Fuel Storage and Oil Storage Areas away from the Disposal Rooms and Waste Transport Paths is now credited as an IC.
  - The initial assumption that operation of the facility will be in accordance with 30 CFR 57 has been replaced with specific Technical Safety Requirement (TSR), Safety Management Program (SMP), and IC controls.
  - Initial assumptions with regard to RH Borehole protection of waste in fires, the location of UG electrical substations, and experimental area hazards have been added.
  - The WHB Facility Cask Loading Room (FCLR), Transfer Cell, and Cask Unloading Room (CUR) shielding is now a credited DF.
  - The RH Bay floor slope is no longer credited as an IC and the Hot Cell Ventilation System, Transuranic Package Transporter Model II (TRUPACT-II) Unloading Dock (TRUDOCK) Cranes, and UG Vehicle capability to protect fluids from spilling in a collision are no longer credited as SSC controls.
  - A SAC has been developed for Waste Conveyance Operations.

  - The initial assumptions regarding maximum waste in the CH and RH Bays are no longer required as the number of containers required to challenge limits is far larger than the number possible to store.

- In Chapter 2.0, provided clarifications, editorial changes, and minor corrections throughout. The more significant revisions are as follows:
  - Added Section 2.1.1, "The Two Incidents at WIPP in February 2014."
  - Stated that mining and waste emplacement can take place simultaneously only based on adequate available airflow.
  - Added description of Criticality Control Overpacks.
  - Added description of "Upcasting" in 2.4.4.1.
  - Added extensive text in several sections regarding changes to the UG Ventilation System, including modifications to existing equipment and the addition of the Interim Ventilation System (IVS) and Supplemental Ventilation System (SVS).
  - Added Section 2.4.4.6.1, "Panel 6 and Panel 7, Room 7 Closure."
  - Deleted notations that the 10-160B process is not in use.
  - Added description of Battery Exhaust System in 2.7.3.1.
  - In Section 2.7.3.2, "Waste Handling Building Contact-Handled and Remote-Handled Waste Handling Area Ventilation Systems," information with regard to the response of tornado dampers to an earthquake is now provided.
  - Section 2.8.2 and subsections have been updated to reflect changes in Fire Protection.
  - Section 2.10.4, "Central Monitoring Room," has been added.
  - Revised several figures and added Figures 2.4-7, 2.7-10, 2.7-11.
- A comprehensive revision of the hazards evaluation was performed and is documented in Chapter 3.0. The revised HA now addresses potential chemical exothermic reactions in noncompliant drums present at WIPP and propagating fires.
- Chapter 4.0 has been totally rewritten to conform to the requirements of DOE-STD-3009-2014 and reflect the results of the revised hazards analysis. Chapter 4.0 also notes that instrumentation has been augmented to provide local readouts and analog feeds to Central Monitoring Room (CMR) displays, as appropriate.
- Chapter 5.0 has been totally rewritten to conform to the requirements of DOE-STD-3009-2014 and reflect the results of the revised HA.
- In Chapter 6.0, added coverage of Criticality Control Overpacks, increased the number of contingencies explicitly addressed in Section 6.4.3 by five (liquid events previously "included" are now individually addressed, other contingencies are added), and, in conjunction with Chapter 18.0, clarified the use of non-destructive assay.
- A discussion of "Ground Control" has been added to Chapter 11.0.
- SMP Chapters 6.0 through 17.0 have been reviewed and updated. As permitted by DOE-STD-3009-2014, the chapters have been left in the DOE-STD-3009-94 format, including the Key Attributes (KAs) identified in Revision 4. KAs are not called for by the DOE-STD-3009-2014 format and will be deleted in Revision 6.

- Key elements (KEs) have been added in SMP Chapters 7.0, 8.0, 10.0, 11.0, 12.0, 14.0, 15.0, and 17.0 to conform to the requirements of DOE-STD-3009-2014.
- Chapters 13.0, "Human Factors," and 16.0, "Provisions for Decontamination and Decommissioning," have been deleted as DOE-STD-3009-2014 does not require this content and WIPP has no special considerations requiring presentation of the information in those chapters.
- Chapter 18.0, which includes KEs, has been added to describe the WIPP WAC compliance program. This reflects the importance placed on the WIPP WAC as an IC by the HA.

E.2 FACILITY BACKGROUND AND MISSION

The WIPP facility mission is to provide a safe and permanent disposal location for government-owned TRU and TRU Mixed Wastes. The current WIPP mission includes the disposal of both CH Waste (i.e., waste with a radiation level of less than 200 millirem per hour at the surface of the Waste Container) and RH Waste (i.e., waste with a radiation level of equal to or greater than 200 millirem per hour but less than 1,000 rem per hour) in the UG repository.

The DOE was authorized by Public Law in 1979 to provide a research and development facility for demonstrating the safe permanent disposal of TRU Wastes from national defense activities and programs of the United States, exempted from regulation by the U.S. Nuclear Regulatory Commission (NRC). Construction of the WIPP site started in the early 1980s after completion of a site selection study in which several sites in southeast New Mexico were evaluated and the present site was selected based on extensive geotechnical research, supplemented by testing. In 1992, the WIPP facility property was transferred from the U.S. Department of the Interior to the DOE. Consistent with the WIPP mission, lands within and around the WIPP site boundary are administered according to a multiple land-use policy. During operations, the area within the WIPP site boundary will remain under federal control. After completion of facility construction, the facility entered into its current life-cycle phase, disposal. WIPP began receipt and disposal of CH Waste in March 1999 and RH Waste in January 2007. The disposal phase is planned to last 35 years.

On February 5, 2014, a fire occurred in the UG involving a salt haul truck. This event was investigated by both DOE and Nuclear Waste Partnership LLC (NWP). The DOE Accident Investigation Report (*U.S. Department of Energy Accident Investigation Report, Underground Salt Haul Truck Fire at the Waste Isolation Pilot Plant, February 5, 2014*) was issued on March 13, 2014, including 22 Conclusions of Need and 35 Judgments of Need. The Fire Origins and Cause Investigation Findings and Recommendations prepared for NWP was issued on July 28, 2015.

On February 14, 2014, a radioactive release event occurred in the UG due to a chemical exothermic reaction in a drum noncompliant with the WIPP WAC, involving a small release to the environment. The Phase 1 DOE Accident Investigation Report was issued on April 22, 2014 with 31 Conclusions of Need and 47 Judgments of Need. Following the completion of a virtual survey of the affected panel room, the Phase 2 Accident Investigation Report was issued on April 16, 2015 with 24 Conclusions of Need and 40 Judgments of Need. The *Fire Forensic Analysis of the Radiological Release Event at the Waste Isolation Pilot Project on February 14, 2014* was issued by DOE on April 6, 2015.

E.3 FACILITY OVERVIEW

The 10,240-acre WIPP site is located in Eddy County in southeastern New Mexico, 26 miles east of Carlsbad. The WIPP site is located in an area of low population density. The area surrounding the facility is used primarily for grazing and the development of potash, oil, and gas resources. No mineral resource

development is allowed within the WIPP site boundary, with the exception of existing leases in Section 31 (the far southwest corner of the *Waste Isolation Pilot Plant Land Withdrawal Act of 1992* Land Withdrawal Area), which will be acquired if needed. All other sections are reserved to the center of the earth.

The WIPP site is divided into surface structures, shafts, and subsurface structures and is designed to receive and handle 500,000 cubic feet per year of CH Waste and 10,000 cubic feet per year of RH Waste. The WIPP surface structures support the receipt of TRU Waste from generator sites. The WHB is the surface location for the unloading of generator-prepared Waste Containers from DOE-owned and NRC-certified U.S. Department of Transportation (DOT) Type B shipping packages. The CH and RH Waste Containers are transferred from the surface to the UG through the Waste Shaft using the Waste Shaft Conveyance. The surface entry/egress from the Waste Shaft Conveyance and the Waste Hoist system and support structure are within the WHB. The CH and RH Waste Containers are removed from the Waste Shaft Conveyance at the Waste Shaft Station in the UG at 2,150 feet below the surface. The Waste Containers are moved along a predetermined Transport Path to their final disposal location. The WIPP facility is designed to have a TRU Waste disposal capacity of 6.2 million cubic feet. In rare circumstances the disposal process may be reversed if WIPP is notified by a generator site that a disposed Waste Container has been received in error and must be retrieved.

The nearest site boundary from either the WHB or the UG Exhaust Shaft is at a distance of approximately 2.9 kilometers. The enclosed area is the Land Withdrawal Area (WIPP site boundary) as described in Figure 1.3-3 of Chapter 1.0, “Site Characteristics.”

Electrical power required for WIPP operations is provided by an offsite utility. This utility plays a role in the safety aspects of the normal WIPP operations by supporting the operations of the WHB and UG ventilation, the WHB Fire Suppression System (FSS), and the Waste Hoist. Loss of power was analyzed within the DSA, however, the systems selected to reduce the consequences do not require electrical power to initiate the mitigation of the consequences of the event. Additionally, WIPP has auxiliary power systems that will supply power for critical life safety functions that require electricity.

The WIPP fire and potable water are obtained via a 10-inch water pipeline managed by the City of Carlsbad.

Onsite medical support is provided on the surface and in the UG.

WIPP maintains a number of Mutual Aid Agreements with surrounding entities. These agreements relate to medical, fire response, and mine emergency support, as required. A summary of the Mutual Aid Agreements is included in *WIPP Emergency Management Plan* (WP 12-9).

E.4 FACILITY HAZARD CATEGORIZATION

The WIPP facility is classified as a Hazard Category 2 DOE Nonreactor Nuclear Facility. Facility categorization was performed consistent with *Hazard Categorization and Accident Analysis Techniques for Compliance with DOE Order 5480.23, Nuclear Safety Analysis Reports* (DOE-STD-1027-92). Based on a single Waste Container inventory limit of 80 plutonium-239 equivalent curies (PE-Ci), the WIPP radiological inventory exceeds the DOE-STD-1027-92 plutonium-239 threshold quantity for Hazard Category 2.

For non-radiological hazards, based on the criteria of DOE-STD-3009-2014, Section A.2, the chemicals in the WIPP Chemical Inventory that do not screen out would still not result in a release that would

exceed the Protective Action Criteria (PAC)-1 for MOI or PAC-2 for the co-located worker consequence thresholds. Of the chemical constituents associated with U.S. Environmental Protection Agency (EPA) Hazardous Waste Numbers that may be present in the TRU Mixed Waste per the *Waste Isolation Pilot Plant Hazardous Waste Facility Permit* (HWFP) and polychlorinated biphenyls (PCBs) per the EPA PCB Conditions of Approval (EPA 2011), only beryllium powder did not screen out, as there are multiple TRU Waste Containers that contain significant beryllium in a solid form. However, the bulk of the beryllium material in TRU Waste is in solid form (i.e., not powder) and would not be dispersible due to insult to a TRU Waste Container. Since the predominant and most probable hazard in TRU Waste is radioactive material, any release of beryllium would be coincident with a release of radioactive material. The chemical hazard consequences due to the release of any material intermixed with TRU Waste and released simultaneously due to an insult of a TRU Waste Container are less than the radiological consequences of the same event; therefore, the controls derived for the radiological event are considered to prevent/mitigate any chemical release.

E.5 SAFETY ANALYSIS OVERVIEW

The principal operations at WIPP involve the receipt and disposal of TRU Waste. WIPP CH and RH Waste operations considered in this DSA include the following:

- Receipt, movement, and emplacement of CH Waste Containers with battery-powered and diesel-fueled forklifts, electric-powered Automated Guided Vehicles, cranes, the Waste Hoist, and UG transporter.
- Receipt, movement, and emplacement of RH Waste Containers with cranes, transfer cars, the Waste Hoist, UG 41-ton diesel-fueled forklift, and the Horizontal Emplacement and Retrieval Equipment (HERE) or Horizontal Emplacement Machine (HEM).
- Retrieval, movement, and shipment of CH and RH Waste Containers, if required.
- Maintenance and operation of surface and UG Waste Handling equipment and engineered features.
- Maintenance of surface buildings and outside areas.
- Maintenance and preparation (i.e., mining) of the UG disposal facility.

Movement of CH and RH Waste Containers in the UG involves large Waste Handling equipment containing significant amounts of diesel fuel and hydraulic fluid.

The principal hazard analyzed for the WIPP is the potential for the release of radiological material associated with the TRU Mixed Waste resulting from fires, deflagrations/overpressurizations, and loss of confinement events due to in-process activities, external initiation, or Natural Phenomena Hazard (NPH) initiated events. The hazard and accident analyses were performed using the methodology outlined in DOE-STD-5506-2007 for compliance with DOE-STD-3009-2014, and approved by CBFO for application at WIPP. There are two hazard scenarios that challenge the Evaluation Guideline for MOI: the Large Pool Fire in Waste Shaft and Loss of Confinement at the Waste Shaft Station Due to Drop of Vehicle/Equipment from the Waste Collar. Therefore, they were the only events that were candidates for accident analysis. The MOI doses determined by the analyses, 7.3 and 5.2 rem, barely exceed the Moderate consequence threshold of 5.0 rem. The SACs “Waste Conveyance Operations” and “Liquid-fueled Vehicle/Equipment Prohibition” were selected to control these hazards. Table 3.3-9, “Hazard Evaluation Events Requiring Further Evaluation,” summarizes other events which were evaluated with regard to appropriate mitigation.

The HA and accident analyses were performed using the methodology outlined in DOE-STD-5506-2007 for compliance with DOE-STD-3009-2014. The HA identified over 600 events. A review of these events resulted in grouping them into a set of 167 unique and representative radiological events, which are listed in Table 3.3-6. A subset of the events further identified as being an unmitigated Risk Class I or II hazard to one or more receptors, requiring further evaluation to reduce risk to the facility worker or co-located worker. The major hazardous events in WIPP are fires, explosion, loss of confinement, external events, and NPH events. The following SS SSCs are selected to protect co-located worker or facility worker:

- **UG Automatic Fire Suppression System**. Vehicles and equipment with a significant combustible liquid capacity that are selected for use near CH Waste are equipped with an automatic FSS. UG vehicles/equipment that are selected for use shall have an automatic FSS as determined by NFPA 122 required analysis when operating in the Waste Shaft Station when CH Waste is present, when transporting CH Waste in the Vehicle Exclusion Zone (VEZ), when transporting CH Waste between the VEZ and the CH Waste Face, and any other vehicles/equipment to be operated within 200 feet of the CH Waste Face.
- **UG Ventilation Filtration System/Interim Ventilation System**. The Underground Ventilation Filtration System (UVFS)/IVS provides for high-efficiency particulate air (HEPA) filtration of UG exhaust air. This system also draws potential airborne contamination away from normally occupied locations in the UG. These features reduce the consequences to the co-located worker and MOI (HEPA filtration) and reduce the consequences for the facility worker by drawing contamination away from normally occupied areas of the UG.
- **WHB Fire Suppression System**. The WHB FSS provides for suppression of fires in the WHB before they become large enough to affect waste not in a closed Shipping Package.
- **CH WH CVS**. The CH WH CVS provides a confinement barrier with HEPA filters providing the capability to limit releases of airborne radioactive contaminants from the CH Bay, Room 108, or Conveyance Loading Room (CLR). These features reduce the consequences to the co-located worker and MOI.

The following DFs are selected to reduce the risk to co-located worker or facility worker:

- **Type B Shipping Package**. The Type B Shipping Package design is certified by the NRC for transport of radiological wastes on the public highways. Extensive testing has been performed to ensure the waste is protected from release in the case of an upset condition. The passive DF of the Type B Shipping Package prevents radiological releases from its contained loads and provides shielding to reduce consequences to the facility worker.
- **UG Fuel Storage and Oil Storage Areas located away from Waste Handling and Storage Areas**. The UG Fuel Storage and Oil Storage Room locations are defined in the configuration of the UG and are located north of the storage and transport of radiological waste areas. This passive DF prevents fires and/or explosions at the refueling station or oil storage room from affecting the handling and storage of waste.
- **Facility Cask (RH Facility Cask/Light Weight Facility Cask)**. The robust construction of the RH Facility Cask ensures that RH Waste is protected from anticipated insults (e.g., fire, deflagration, loss of confinement) and its lead lining reduces the consequences to the facility worker when handling RH Waste.
- **Waste Hoist Support Structure**. The Waste Hoist Support Structure is the physical structure that supports the Waste Hoist, and is designed to withstand the DBE. The Waste Hoist systems in the shaft and all shaft furnishings are designed to resist the dynamic forces of the hoisting

operations (the dynamic forces are greater than the seismic forces on the UG facilities). The design reduces the likelihood for failure of the Waste Conveyance.

- **WHB Design for High Wind**. The WHB is built as a Type II construction per the Standard on Types of Building Construction (NFPA 220), and serves as a confinement barrier to control the potential for release of hazardous and/or radioactive material. The WHB is designed and constructed to withstand the Design Basis Tornado (DBT) with 183 miles per hour (mph) winds and a translational velocity of 41 mph, a tangential velocity of 124 mph, a tangential velocity of 124 mph, a maximum rotational velocity radius of 325 feet, a pressure drop of 0.5 pounds per square inch (psi) and a pressure drop rate of 0.09 psi per second. This passive DF reduces the likelihood for impacts to Waste Containers located in the WHB which could result in a loss of confinement of radiological material.
- **WHB Design for Noncombustible Construction and Curbing**. The WHB is constructed primarily of metal and concrete with its exterior surfaces and roofing consisting of noncombustible materials and curbing extending above the floor of the WHB. This passive construction DF reduces the likelihood of small fires propagating into a large fire and also reduces the likelihood of a fire originating external to the WHB to penetrate the outer wall.
- **WHB Design for Roof Loading**. The roof of the WHB is designed to withstand 27 pounds per square foot (lb/ft^2) of snow load. The 100-year recurrence maximum snowpack for the WIPP region is 10 lb/ft^2. This passive DF reduces the likelihood for collapse of the WHB roof that could result in the loss of confinement of radiological material.
- **WHB Design for Seismic**. The WHB is designed and constructed to withstand the Design Basis Earthquake (DBE) with 0.1 g peak ground acceleration (PGA) and a 1,000-year return interval.
- **WHB Design for Waste Shaft Access**. The Waste Shaft Collar Area prevents direct and unrestricted access to the Waste Shaft. Vehicles/equipment entering the access area must make a 90 degree turn toward the Waste Shaft.
- **FCLR, Transfer Cell, and CUR Shielding**. The Hot Cell is constructed of thick concrete for shielding. This DF reduces the consequences to the facility worker when processing RH Waste Containers in the Hot Cell Complex.
- **Panel 6 and Panel 7, Room 7 Bulkheads**. The installation of isolation bulkheads mitigates the consequences of a TRU Waste Container exothermic event in a closed Disposal Panel.
- **Facility Pallet**. The facility pallet provides shielding for the bottom tier CH Waste Containers from direct flame impingement. This reduces the consequences to all receptors by ensuring that CH Waste Containers remain intact (e.g., no lid loss with waste ejection) and, therefore, the airborne release fraction / respirable fraction (ARF/RF) factors are lower as compared to unconfined burning ARF/RFs.
- **Vehicle Barriers**. Vehicle Barriers consist of a double row of concrete (e.g., Jersey type barriers, installed a nominal distance of 5 feet west of the CH Bay/TRUPACT Maintenance Facility (TMF) common wall extending south from the TMF south exterior wall a minimum distance of 25 feet and, one set of interconnected concrete barriers positioned a minimum 25 feet south of the CH Bay exterior wall extending between Airlock 100 to a point nominally 5 feet west of the CH Bay/TMF common wall (approximately 85 feet in total length) to intersect with the other section. A nominal 3-foot gap at the intersection of the east-west barrier and the double row of barriers is permitted for fire department access.

- **Waste Hoist Brakes**. The Waste Hoist Brakes work in conjunction with the Waste Hoist Support Structure to control movement of the conveyance up and down the Waste Shaft. This prevents an uncontrolled drop of the conveyance loaded with waste down the shaft.

The following Administrative Controls (ACs) are selected to reduce the risk to the co-located worker or facility worker:

- **WIPP WAC Compliance**. Compliance with the WIPP WAC reduces both the likelihood and consequences of adverse events. The WIPP WAC provides assurance that waste meets specific criteria for the containers and their contents. The container provides some resistance to adverse events (e.g., drops). WIPP WAC requirements limit radionuclide composition, quantities of liquids, constituencies of contents, combinations of materials which are relied upon when determining consequences from upsets to the containers.
- **Vehicle Exclusion Zone**. A VEZ, defined as distance between the leading edge of the lead escort vehicle and the trailing edge of the lag escort vehicle, and the nominal width of the drift, shall be established about the TRU Waste being transported in the UG, and be maintained for the duration of the transport. Only one liquid-fueled vehicle is allowed in the VEZ, except in cases involving repair/replacement of vehicles and/or transfers. This prevents vehicle-to-vehicle collisions which could result in a fire event.
- **Limit of Two Liquid-fueled Vehicles/Equipment ≤ 25 ft. of CH Waste Face**. UG vehicle and equipment interactions are controlled when operating within 25 feet of the CH Waste Face by restricting vehicle/equipment access (e.g., emplacement, waste extraction). Limiting the number of liquid-fueled vehicles/equipment operating within 25 feet of the CH Waste Face to a maximum of two reduces the likelihood for collisions.
- **UG Lube Truck Operations**. Lube trucks are prohibited within 200 feet of the Waste Face and excluded from the Waste Shaft Station and the E-140 Drift between Bulkheads 310 and 415 when CH Waste is present in the Waste Shaft Station. Prohibiting the Lube Truck from being within 200 feet of the Waste Face and/or the Waste Shaft Station reduces the likelihood for large liquid combustible fires involving CH Waste and thereby limits that amount of MAR (i.e., consequences) that would be involved in a pool fire should it occur.
- **Pre-operational Checks of UG Vehicles/Equipment**. Waste Handling Vehicles and UG vehicles/equipment in an active Disposal Room when CH Waste is present, when transferring CH Waste between the VEZ and the CH Waste Face, within the VEZ, or within the Waste Shaft Station when CH Waste is present, shall have a pre-operational check prior to their use. Inspection provides assurance that the vehicle and/or equipment is operating properly and has no obvious signs of degradation that could lead to its misoperation, thereby reducing the likelihood of collisions and/or combustible liquid leaks that could lead to a fire or pool fire event. Liquid-combustible capacity equipment in an active Disposal Room when CH Waste is present, when transferring CH Waste between the VEZ and the CH Waste Face, within the VEZ, or within the Waste Shaft Station when CH Waste is present, creates the potential for leaks and ignition and/or vehicles colliding with the equipment resulting in a pool fire.
- **Area Attendance: Spotter**. Liquid-fueled vehicles in the VEZ, when transferring CH Waste between the VEZ and the Waste Face, the Waste Shaft Station when CH Waste is present, and within 200 feet of the CH Waste Face are Attended. Attendance provides assurance that unnecessary vehicles will be removed from the area, spotting of vehicles/ equipment when operating in close proximity, observation for indications of vehicle/equipment misoperation and conditions that could lead to a fire. Vehicles/equipment with liquid combustible capacity greater

than 25 gallons shall be attended in the RH Bay when CH Waste is present in the CH Bay. An Attendant is independent of vehicle/equipment operation.

- **Area Attendance: Notification**. Liquid-fueled vehicles in the VEZ, the Waste Shaft Station when CH Waste is present, and within 25 feet of the CH Waste Face are Attended. Attendance ensures that UG Facility Workers are notified of conditions requiring response to mitigate worker consequences. Vehicles/equipment with liquid combustible capacity greater than 25 gallons shall be attended in the RH Bay when CH Waste is present in the CH Bay. An Attendant is independent of vehicle/equipment operation.
- **Waste Conveyance Control**. The Waste Conveyance is required to be present at the Waste Shaft Collar prior to the loading or unloading of TRU Waste at the Waste Shaft Collar. The control ensures the Waste Conveyance is present at the Waste Shaft Station prior to the unloading or loading of TRU Waste at the Waste Shaft Station. When TRU Waste is in transit between the Waste Shaft Collar and the Waste Shaft Station, Doors 155 and 156 are required to be closed. The Waste Shaft Conveyance shall remain at the Waste Shaft Station until the Waste is loaded onto the Waste transporter and the transporter is moving away from the Waste Shaft. This reduces the likelihood for vehicles, equipment, and/or loads to drop down an open Waste Shaft into the shaft sump.
- **Aboveground Liquid-Fueled Vehicles/ Equipment Prohibition: Vehicle Operations**. Liquid-fueled vehicles and equipment are prevented from entering the CH Bay, Room 108, and Waste Shaft Access Area when CH Waste is present. This control reduces the likelihood of pool fire occurring in the presence of CH Waste by removing a likely source of liquid fuel.
- **Fuel Tanker Prohibition**. Fuel Tanker trucks are prohibited from entering the Parking Area Unit south of the WHB. Prohibition of Fuel Tankers from the WHB parking area unit reduces the likelihood for a large source of liquid-fuel to contribute to a large pool fire affecting CH Waste located in the CH Bay.
- **TRU Waste Outside the WHB**. The TRU Waste Outside the WHB control is established to ensure that TRU Waste Containers are protected from adverse events (e.g., fires, explosions, impacts) when located aboveground and outside the WHB. This control excludes site-derived TRU Waste. This is accomplished by ensuring that TRU Waste (excluding site-derived TRU Waste), aboveground and outside of the WHB, is contained in a closed Type B Shipping Package.
- **Real-time Monitoring at Panel 6 and Panel 7, Room 7 Isolation Bulkheads**. The Real-time Monitoring at Panel 6 and Panel 7, Room 7 Isolation Bulkheads is established to ensure that active radiological monitoring is in place to protect workers in these areas. The real-time monitoring will ensure an immediate detection of and response to a potential radiological release originating inside the closed Panel 6 and Panel 7, Room 7 areas should a repeat chemical exothermic reaction occur in known WAC noncompliant containers. Detection of leaks around the isolation bulkhead into potentially occupied areas of the UG would prompt action to minimize UG facility worker consequences of the event.
- **CH Bay Alternative Vehicle Barrier**. The CH Bay Alternative Barrier Provision control is established to ensure that the southwest section of the WHB wall is protected when a portion of the Vehicle Barriers is required to be removed to permit liquid-fueled vehicle/equipment access to the excluded area.

The above controls reduce the risk to public, co-located worker and facility worker to an acceptable level from normal, abnormal and accident conditions that could occur during WIPP operations.

E.6 ORGANIZATIONS

NWP is the current WIPP Management and Operating Contractor. NWP performs the unloading of the NRC-certified DOT Type B shipping containers, the transfer of CH and RH Waste Containers to the UG, and the emplacement into a disposal location, as well as maintenance of the surface and UG facilities, but may use subcontractor support as required. The WIPP facility is owned by DOE, which provides oversight of WIPP operations through the CBFO.

Other DOE prime contractors supporting operations of the WIPP facility include Sandia National Laboratories – Carlsbad Program Group (which is responsible for research and development and acts as a scientific and technical advisor); Los Alamos National Laboratory – Carlsbad Operations (which provides expertise in support of TRU Waste characterization and transportation and National TRU Program (NTP) Central Waste Analysis); and CBFO Technical Assistance Contractor (which provides regulatory and technical support to CBFO).

DSA preparation was developed under the direction of NWP, using a variety of professional resources within the NWP organization and affiliated organizations.

E.7 SAFETY ANALYSIS CONCLUSIONS

The DSA process describes and analyzes the WIPP site and the Waste Handling and disposal operations. It has identified associated hazards and the conditions and hazard controls necessary to protect the worker, the public, and the environment. The safety basis demonstrates that WIPP employs the necessary controls to provide an acceptable level of safety compliant with 10 CFR 830, Subpart B.

The SVS is a project currently in process, which will not be completed at the time of implementation of this DSA, to increase airflow to the UG. It is described in Chapter 2.0, “Facility Description,” but its operation is explicitly prohibited under this DSA. Upon completion and prior to its operation, any associated controls will be added to the safety basis and its operation will be permitted under a revised DSA.

Additionally, there are ongoing DOE programmatic activities which may ultimately impact the facility safety basis. Issues have arisen concerning the MAR methodology and conservatisms in DOE-STD-5506-2007 as well as the manner in which chemical exothermic reactions should be modeled. As the safety basis analyses conform to requirements of DOE-STD-5506-2007, changes in the standard could propagate to this DSA.

E.8 DSA ORGANIZATION

This DSA was organized in accordance with the guidelines of DOE-STD-3009-2014. The body of the DSA parallels the format delineated in the standard. Chapters 7.0–17.0 maintain the format of DOE-STD-3009-94, CN 3, as permitted by DOE-STD-3009-2014. Chapter 18.0, “WIPP Waste Acceptance Criteria Compliance Program,” new in this DSA revision, is in the DOE-STD-3009-2014 format.

Chapter	Content
Executive Summary	Facility Background and Mission; Facility Overview; Facility Hazard Categorization; Safety Analysis Overview; Organizations; Safety Analysis Conclusions; DSA Organization
Chapter 1.0, Site Characteristics	Introduction; Requirements; Site Description; Environmental Description; Natural Event Accident Initiators; Man-made External Accident Initiators; Nearby Facilities; Validity of Existing Environmental Analysis
Chapter 2.0, Facility Description	Introduction; Requirements; Facility Overview; Facility Structure; Remote-Handled Waste Handling Equipment and Process Description; Contact-Handled Waste Handling Equipment and Process Description; Confinement Systems; Safety Support Systems; Utility Distribution Systems; Auxiliary Systems and Support Facilities
Chapter 3.0, Hazard and Accident Analysis, and Control Selection	Introduction; Requirements; Hazard Analysis; Accident Analysis; Beyond Design/Evaluation Basis Accidents; Planned Design and Operational Safety Improvements
Chapter 4.0, Safety Structures, Systems, and Components	Introduction; Requirements; Safety Class Structures, Systems, and Components; Safety Significant Structures, Systems, and Components; Specific Administrative Controls
Chapter 5.0, Derivations of Technical Safety Requirements	Introduction; Requirements; Technical Safety Requirement Coverage; Derivation of Process Areas and Facility Modes; Technical Safety Requirements Derivation; Administrative Controls; Design Features; Interface with Technical Safety Requirements from Other Facilities
Chapter 6.0, Prevention of Inadvertent Criticality	Introduction; Requirements; Criticality Concerns; Criticality Controls; Criticality Safety Program; Criticality Instrumentation
Chapter 7.0, Radiation Protection	Introduction; Requirements; Radiation Protection Program and Organization; As Low as Reasonably Achievable (ALARA) Policy and Program; Radiological Protection Training; Radiation Exposure Control; Radiological Monitoring; Radiological Protection Instrumentation; Radiological Protection Recordkeeping; Occupational Radiation Exposures
Chapter 8.0, Hazardous Material Protection	Introduction; Requirements; Hazardous Material Protection and Organization; Hazardous Materials Exposure Control Program; Hazardous Material Training; Hazardous Material Exposure Control; Hazardous Material Monitoring; Hazardous Material Protection Instrumentation; Hazardous Material Protection Recordkeeping; Hazard Communication Program; Occupational Chemical Exposures
Chapter 9.0, Radioactive and Hazardous Waste Management	Introduction; Requirements; Radioactive and Hazardous Waste Management Program and Organization; Radioactive and Hazardous Waste Streams and Sources
Chapter 10.0, Initial Testing, In Service Surveillance, and Maintenance	Introduction; Requirements; Initial Testing Program; In Service Surveillance Program; Maintenance Program
Chapter 11.0, Operational Safety	Introduction; Requirements; Conduct of Operations; Fire Protection; Ground Control
Chapter 12.0, Procedures and Training	Introduction; Requirements; Procedure Program; Training Program
Chapter 13.0, Human Factors	Not required – Deleted from Revision 5b
Chapter 14.0, Quality Assurance	Introduction; Requirements; Quality Assurance Program and Organization; Quality Improvement; Documents and Records; Quality Assurance Performance
Chapter 15.0, Emergency Preparedness Program	Introduction; Requirements; Scope of Emergency Preparedness; Emergency Preparedness Planning
Chapter 16.0, Provisions for Decontamination and Decommissioning	Not Required – Deleted from Revision 5b

Chapter	Content
Chapter 17.0, Management, Organization, and Institutional Safety Provisions	Introduction; Requirements; Organizational Structure, Responsibilities, and Interfaces; Safety Management Policies and Programs
Chapter 18.0, WIPP Waste Acceptance Criteria Compliance Program	Organizational Roles and Responsibilities; Transuranic WAC for the Waste Isolation Pilot Plant; WIPP Facility WAC Compliance Program Description; WIPP Certified Programs; Prior to Authorizing Shipment; Upon Receipt at WIPP; At DOE Sites: Generator Site Technical Review; Previously Certified Waste Preclusion of Shipments; Key Elements

E.9 REFERENCES

10 CFR 830, "Nuclear Safety Management," *Code of Federal Regulations*. U.S. Government Printing Office, Washington, DC.

DOE/CBFO-15-3554, September 2015, *Basis for Approval WIPP Dispersion Modeling Protocol*, Letter from Carlsbad Field Office to Nuclear Waste Partnership LLC.

DOE-STD-3009-2014, *Preparation of Nonreactor Nuclear Facility Documented Safety Analysis*, November 2014, U.S. Department of Energy, Washington, DC.

DOE-STD-5506-2007, *Preparation of Safety Basis Documents for Transuranic (TRU) Waste Facilities*, April 2007, U.S. Department of Energy, Washington, DC.

DOE-STD-1027-92, Change 1, 1997, *Hazard Categorization and Accident Analysis Techniques for Compliance with DOE Order 5480.23, Nuclear Safety Analysis Reports*, September 1997, U.S. Department of Energy, Washington, DC.

EPA (U.S. Environmental Protection Agency), Letter and enclosed Conditions of Approval from Carl E. Edlund (Director, Multimedia Planning and Permitting Division, EPA) to Edward Ziemianski, Acting Manager, Carlsbad Field Office, DOE, dated January 5, 2011, granting approval for WIPP to dispose of TRU and TRU-mixed wastes containing PCBs.

HWFP, *Waste Isolation Pilot Plant Hazardous Waste Facility Permit*, NM4890139088-TSDF (current revision), New Mexico Environment Department, Santa Fe, NM.

NFPA 220, *Standard on Types of Building Construction*, 2006 Edition, National Fire Protection Association, Quincy, MA.

NFPA 122, *Standard for Fire Prevention and Control in Metal/Nonmetal Mining and Metal Mineral Processing Facilities*, 2015 Edition, National Fire Protection Association, Quincy, MA.

Public Law 94-580, 90 Stat. 2795. *Resource Conservation and Recovery Act of 1976*.

Public Law 102-579, 106 Stat. 4777, 1992 (as amended by Public Law 104-201, 1996), *Waste Isolation Pilot Plant Land Withdrawal Act*.

U.S. Department of Energy Accident Fire Forensic Analysis of the Radiological Release Event at the Waste Isolation Pilot Plant on February 14, 2014, U.S. Department of Energy, Washington, DC.

U.S. Department of Energy Accident Investigation Report, Phase 1 Radiological Release Event at the Waste Isolation Pilot Plant on February 14, 2014, U.S. Department of Energy, Washington, DC.

U.S. Department of Energy Accident Investigation Report, Phase 2 Radiological Release Event at the Waste Isolation Pilot Plant on February 14, 2014, U.S. Department of Energy, Washington, DC.

U.S. Department of Energy Accident Investigation Report, Underground Salt Haul Truck Fire at the Waste Isolation Pilot Plant, February 5, 2014, U.S. Department of Energy, Washington, DC.

WP 12 9, *WIPP Emergency Management Plan* (current revision), Nuclear Waste Partnership LLC, Carlsbad, NM.

List of Acronyms and Abbreviations

A	Anticipated (frequency level)
AA	accident analysis
AC	Administrative Control
acfm	actual cubic feet per minute
ACGLF	adjustable center-of-gravity lifting fixture
AEGL	Acute Exposure Guideline Level
AFA	Alignment Fixture Assembly
AGV	Automated Guided Vehicle
AIB	Accident Investigation Board
AK	Acceptable Knowledge
ALARA	As Low As Reasonably Achievable
AMWTP	Advanced Mixed Waste Treatment Project
ANS	American Nuclear Society
ANSI	American National Standards Institute
ARF	airborne release fraction
ASME	American Society of Mechanical Engineers
ASTM	American Society for Testing and Materials
BDBA	Beyond Design Basis Accident
BEBA	Beyond Evaluation Basis Accident
BEU	Beyond Extremely Unlikely (frequency level)
BLM	Bureau of Land Management
CAM	Continuous Air Monitor
CBFO	DOE Carlsbad Field Office
CCEM	chemical compatibility evaluation memo
CCO	Criticality Control Overpack
CCP	Central Characterization Program
CCTV	closed-circuit television
CFR	*Code of Federal Regulations*
cfm	cubic feet per minute
CH	contact-handled
CIS	characterization information summary
CLR	Conveyance Loading Room
CMR	Central Monitoring Room
CMRO	Central Monitoring Room Operator
CMS	Central Monitoring System
CUR	Cask Unloading Room
CVS	Confinement Ventilation System
DAC	derived air concentration
DBA	Design Basis Accident
DBE	Design Basis Earthquake
DBT	Design Basis Tornado
DDC	Direct Digital Control
DF	design feature
DNFSB	Defense Nuclear Facilities Safety Board
DOE	U.S. Department of Energy

DOE-EM	U.S. Department of Energy - Environmental Management
DOELAP	U.S. Department of Energy Laboratory Accreditation Program
DOT	U.S. Department of Transportation
DP	differential pressure
DR	damage ratio
DSA	Documented Safety Analysis
EAL	Emergency Action Level
EFB	Exhaust Filter Building
EPA	U.S. Environmental Protection Agency
EPHA	Emergency Planning Hazard Assessment
ERO	Emergency Response Organization
ERT	Emergency Response Team
ESS	Evaluation of the Safety Situation
EST	Emergency Services Technician
EU	Extremely Unlikely (frequency level)
EUA	Exclusive Use Area
EXT	External
f	frequency
FAS	Fixed Air Sampler
FCLR	Facility Cask Loading Room
FCRD	Facility Cask Rotating Device
FCTC	Facility Cask Transfer Car
FGE	fissile gram equivalent
FHA	Fire Hazard Analysis
FMEA	Failure Modes and Effects Analysis
fpm	feet per minute
FPP	Fire Protection Program
FSM	Facility Shift Manager
FSS	Fire Suppression System
ft^3	cubic feet
FTV	Facility Transfer Vehicle
g	gravitational acceleration or gram(s)
GET	General Employee Training
gpm	gallons per minute
HA	hazard analysis
HalfPACT	Half-package Transporter
HAZMAT	hazardous material
HAZOP	Hazard and Operability Analysis
HDBK	Handbook
HEM	Horizontal Emplacement Machine
HEPA	high-efficiency particulate air
HERE	Horizontal Emplacement and Retrieval Equipment
HVAC	heating, ventilation, and air conditioning
HWFP	Waste Isolation Pilot Plant Hazardous Waste Facility Permit

IBC	International Building Code
IC	Initial Condition
ICE	integrated cooling material
ICV	Inner Containment Vessel
IO	independent observation
IS&H	Industrial Safety and Hygiene
ISMS	Integrated Safety Management System
ISO	International Standards Organization
ITR	Independent Technical Review
IVS	Interim Ventilation System
IWMDL	Interface Waste Management Documents List
JIC	Joint Information Center
KA	key attribute
KE	key element
KeV	kilo-electron volt
kW/m^2	kilowatt per square meter
lb/ft^2	pounds per square foot
LCO	Limiting Conditions for Operation
LCS	Limiting Control Setting
LED	light emitting diodes
LOC	loss of confinement
LPF	Leak Path Factor
LWA	Waste Isolation Pilot Plant Land Withdrawal Act of 1992
LWFC	Light Weight Facility Cask
M&O	management and operating
MAR	material at risk
MeV	mega-electron volt
MgO	magnesium oxide
MOI	Maximally Exposed Offsite Individual
mph	miles per hour
mrem	millirem
MSHA	Mine Safety and Health Administration
NA	not applicable
NARAC	National Atmospheric Release Advisory Center
NCR	nonconformance report
NCS	Nuclear Criticality Safety
NFPA	National Fire Protection Association
NMED	New Mexico Environment Department
NMIMT	New Mexico Institute of Mining and Technology
NPH	Natural Phenomena Hazard
NRC	U.S. Nuclear Regulatory Commission
NTP	National TRU Program
NVP	natural ventilation pressure
NWP	Nuclear Waste Partnership LLC

OA	Outside Area
OCA	Outer Confinement Assembly
OCV	Outer Confinement Vessel
OJT	on-the-job training
OP	overpack
ORNL	Oak Ridge National Laboratory
OSHA	Occupational Safety and Health Administration
PAC	Protective Action Criteria
PCB	polychlorinated biphenyl
PCR	Permittees Conformation Representative
PDIT	Pressure Differential Indicating Transmitter
PDP	Performance Demonstration Program
PE-Ci	plutonium-239 equivalent curies
PGA	peak ground acceleration
PISA	Potentially Inadequate Safety Analysis
PIV	Post Indicator Valve
PLC	Programmable Logic Controller
POC	Pipe Overpack Container
PPA	Property Protection Area
PPE	personal protective equipment
psi	pounds per square inch
psig	pounds per square inch gauge
psf	pounds per square foot
QA	Quality Assurance
QAPD	Quality Assurance Program Description
QAPP	Quality Assurance Project Plan
RAP	Radiological Assistance Program
RCRA	*Resource Conservation and Recovery Act of 1976*
RCT	Radiological Control Technician
RCTC	Road Cask Transfer Car
REMS	Radiological Effluent Monitoring (Sampling) System
RF	respirable fraction
RH	remote-handled
RIDS	Records Inventory and Disposition Schedule
RPP	Radiation Protection Program
RTR	real-time radiography
SAC	Specific Administrative Control
SC	Safety Class
SCAPA	Subcommittee on Consequence Assessment and Protective Actions
SDC	seismic design category
SDD	System Design Description
SDS	safety data sheet
SL	Safety Limit
SLB2	Standard Large Box 2
SMP	Safety Management Program
SNF	Spent Nuclear Fuel

SR	Surveillance Requirement
SS	Safety Significant
SSC	Structures, Systems, and Components
ST	Source Term
STD	Standard
SVS	Supplemental Ventilation System
SWB	Standard Waste Box
TDOP	10-Drum Overpack
TED	Total Effective Dose
TIM	Training Implementation Matrix
TLD	thermoluminescent dosimeter
TMF	TRUPACT Maintenance Facility
TRAMPAC	TRUPACT-II Authorized Methods for Payload Control
TRU	Transuranic
TRUDOCK	TRUPACT-II Unloading Dock
TRUPACT-II	Transuranic Package Transporter Model II
TRUPACT-III	Transuranic Package Transporter Model III
TSDF	Treatment, Storage, or Disposal Facility
TSR	Technical Safety Requirement
U	Unlikely (frequency level)
UG	Underground
UL	Underwriters Laboratory
UNS	unified numbering system
UPS	uninterruptible power supply
USQ	Unreviewed Safety Question
UVFS	Underground Ventilation Filtration System
UVS	Underground Ventilation System
VEZ	Vehicle Exclusion Zone
VOC	volatile organic compound
w.g.	water gauge
WAC	Waste Acceptance Criteria
WAP	Waste Analysis Plan
WDS	WIPP Waste Data System (WWIS is a part of the WDS system)
WH	Waste Handling
WHB	Waste Handling Building
WIPP	Waste Isolation Pilot Plant
WIPP WAC	*Transuranic Waste Acceptance Criteria for the Waste Isolation Pilot Plant*
WSHPD	Worker Safety and Health Program Description
WSPF	waste stream profile form
WTM	waste transfer mechanism
WTMA	waste transfer machine assembly
YTV	Yard Transfer Vehicle

This page intentionally left blank

Table of Contents

1.0 SITE CHARACTERISTICS 1-1
1.1 Introduction 1-1
1.2 Requirements 1-1
1.3 Site Description 1-2
1.3.1 Geography 1-2
1.3.1.1 Waste Isolation Pilot Plant Area 1-2
1.3.1.2 Exclusion Area Land Use and Control 1-4
1.3.2 Demography 1-5
1.4 Environmental Description 1-9
1.4.1 Meteorological Conditions for Design and Operating Bases 1-9
1.4.1.1 Precipitation Summary 1-9
1.4.1.2 Tornadoes 1-10
1.4.1.3 Winds 1-10
1.4.1.4 Dust Storms 1-11
1.4.1.5 Temperature Summary 1-11
1.4.1.6 Site Meteorological Tower 1-12
1.4.2 Hydrology 1-12
1.4.3 Geology 1-12
1.5 Natural Event Accident Initiators 1-14
1.5.1 Earthquakes 1-14
1.5.1.1 Seismic History 1-15
1.5.1.2 Seismic Risk 1-16
1.5.1.3 Design-basis Earthquake 1-17
1.5.2 Design-basis Tornado 1-18
1.5.3 Design-basis Wind 1-18
1.5.4 Design-basis Snow Loading 1-19
1.6 Man-made External Accident Initiators 1-21
1.6.1 Gas Pipeline Explosion 1-21
1.6.2 Aircraft Crash 1-21
1.6.2.1 Military Facilities 1-21
1.6.2.2 Airports and Aviation Routes 1-21
1.7 Nearby Facilities 1-25
1.7.1 Extractive Activities 1-25
1.7.2 Farming and Ranching 1-25
1.7.3 Tourism and Recreation 1-25
1.7.4 Waterways 1-25
1.7.5 Land Transportation 1-25
1.7.5.1 Roads and Highways 1-25
1.7.5.2 Railroads 1-26
1.7.6 Projected Industrial Growth 1-26
1.8 Validity of Existing Environmental Analysis 1-28
1.9 References 1-28

List of Tables

Table 1.4-1. Maximum Wind Speeds for Roswell, New Mexico 1-11
Table 1.4-2. Recurrence Intervals for High Winds in Southeastern New Mexico 1-11
Table 1.5-1. Richter Scale 1-14
Table 1.5-2. Modified Mercalli Intensity Scale 1-15

List of Figures

Figure 1.3-1. Region Surrounding the WIPP Site 1-6
Figure 1.3-2. WIPP Location in Southeastern New Mexico 1-7
Figure 1.3-3. WIPP Site Boundary Area 1-8
Figure 1.4-1. Tectonic Structures of Southeastern New Mexico 1-13
Figure 1.5-1. Seismograph Stations in the WIPP Network 1-20
Figure 1.6-1. Natural Gas Pipelines and Wells within a 5-mile Radius of the WIPP Site 1-23
Figure 1.6-2. Airports and Aviation Routes adjacent to the WIPP Site 1-24
Figure 1.7-1. Natural Gas and Oil Wells within a 10-Mile Radius of the WIPP Site 1-27

1.0 SITE CHARACTERISTICS

1.1 INTRODUCTION

This chapter provides information on the location of the Waste Isolation Pilot Plant (WIPP) site and the site characteristics to support assumptions used in the hazards and accident analyses for potential external and natural event accident initiators and accident consequences.

This chapter is organized as follows:

- Requirements (Section 1.2).
- Site Description (Section 1.3).
- Environmental Description (Section 1.4).
- Natural Event Accident Initiators (Section 1.5).
- Man-made External Accident Initiators (Section 1.6).
- Nearby Facilities (Section 1.7).
- Validity of Existing Environmental Analysis (Section 1.8).
- References (Section 1.9).

1.2 REQUIREMENTS

The U.S. Department of Energy (DOE) was authorized by the *U.S. Department of Energy National Security and Military Applications of Nuclear Energy Authorization Act of 1980* (Public Law 96-164) to provide a research and development facility for demonstrating the safe, permanent, disposal of transuranic (TRU) Wastes from national defense activities and programs of the United States exempted from regulations by the U.S. Nuclear Regulatory Commission (NRC). In accordance with the 1981 and 1990 Records of Decision (46 FR 9162 and 55 FR 25689), the development of the WIPP site was to proceed with a phased approach. Development of the WIPP site began with a siting phase, during which several sites in southeast New Mexico were evaluated and the present site was selected based on extensive geotechnical research supplemented by testing. Information relating to ecology, extractable resources, water and air quality, environmental radioactivity, surface- and groundwater hydrology, and geology necessary to support the 40 CFR 191 long-term performance assessment of the repository is found in *Title 40 CFR Part 191 Compliance Certification Application for the Waste Isolation Pilot Plant* (DOE/CAO 1996-2184).

During initial construction, all the federal lands within the WIPP site boundary were managed in accordance with the terms of “Public Land Order 6403” (48 FR 31038) and a DOE/Bureau of Land Management (BLM) “Memorandum of Understanding between the U.S. Department of Energy and the U.S. Department of the Interior, Bureau of Land Management” (DOE and BLM 1994).

WIPP was designed and constructed according to the *General Design Criteria Manual for Department of Energy Facilities* (DOE Order 6430), dated June 10, 1981, and codes and standards applicable at the time of construction. Facility modifications designed prior to DOE Order 6430 being superseded were designed according to the revision of the order and codes and standards applicable at the time of modification. Facility modifications designed and constructed after DOE Order 6430 was superseded were performed in accordance with the applicable revision of *Facility Safety* (DOE Order 420.1), *Life*

Cycle Asset Management (DOE Order 430.1), and the codes and standards in *Nonreactor Nuclear Safety Design Criteria and Explosives Safety Criteria Guide* (DOE Guide 420.1-1).

On October 30, 1992, the *Waste Isolation Pilot Plant Land Withdrawal Act of 1992* (LWA) (Public Law 102-579) transferred the land from the U.S. Department of the Interior to the DOE. Consistent with the WIPP mission, lands within and around the WIPP site boundary are administered according to a multiple land-use policy. During operations, the area within the WIPP site boundary will remain under federal control.

1.3 SITE DESCRIPTION

1.3.1 Geography

The WIPP site is located in Eddy County in southeastern New Mexico (Figure 1.3-1). The center of the WIPP site is 103°47'27" west longitude and 32°22'11" north latitude.

Prominent natural features within 5 miles of the center of the WIPP site include Livingston Ridge and Nash Draw, which are located about 5 miles west (Figure 1.3-2). Livingston Ridge, the most prominent physiographic feature near the WIPP site, is a northwest-facing bluff about 75 feet high that marks the east edge of Nash Draw, a shallow drainage course about 5 miles wide.

The Pecos River is about 12 miles southwest of the WIPP site at its nearest point. The Guadalupe Mountains are about 42 miles from the WIPP site, which include the Carlsbad Caverns National Park and Guadalupe Mountains National Park, 40 and 70 miles, respectively. The nearest prominent man-made features are oil and gas production wells and associated tank batteries, as well as oil and gas exploration wells. The nearest cities are Loving (with a 2010 population of 1,413), which is 18 miles southwest, and Carlsbad (with a 2010 population of 26,138), which is 26 miles west. The population numbers are taken from the 2010 *Census of Population and Housing* (USDOC 2010).

1.3.1.1 Waste Isolation Pilot Plant Area

The land area within the WIPP Land Withdrawal Area (WIPP site boundary) is 16 square miles. It contains 10,240 acres including Sections 15-22 and 27-34 in Township 22 South, Range 31 East. The area containing the WIPP surface structures is surrounded with a chain link fence and covers about 35 acres in Sections 20 and 21 of Township 22 South, Range 31 East. This fenced area is the WIPP Property Protection Area (PPA). The location and orientation of the WIPP surface structures are shown in Figure 2.4-1. These structures include the following:

- The Waste Handling Building (WHB), where radioactive TRU Waste is received and prepared for Underground (UG) disposal.
- Four shafts to the UG area.
- A Support Building containing office facilities, showers, and change rooms for UG workers.
- An Exhaust Filter Building (EFB).
- Water storage tanks and pump house.
- Modular trailers for office staff and auxiliary buildings for personnel offices.
- Two warehouses.

Support structures outside the PPA include the following:

- Sewage stabilization ponds.
- A 170-foot meteorological tower.
- A communication tower.
- Two mined rock (salt) piles.
- Evaporation ponds for managing site runoff.

The underground facility is centrally located within the 16-section WIPP site boundary and covers a footprint of 550 acres. The UG facility is 2,150 feet below the surface in bedded salt of the Permian Salado Formation and is connected to the surface by four shafts: the Air Intake Shaft, the Salt Handling Shaft, the Exhaust Shaft, and the Waste Shaft. All four shaft openings are within the WIPP PPA. Contact-Handled (CH) and Remote-Handled (RH) TRU Waste will be disposed of in 10 panels: 8 panels, consisting of 7 rooms each, at the south end of the UG facility plus two additional panels, designated as Panels 9 and 10, which may be located in access drifts.

There are no industrial, commercial, institutional, recreational, or residential structures within the WIPP site boundary. However, the DOE has an agreement with Magnum Minerals LLC of Hereford, Texas, to remove 300,000 tons of salt from the surface salt piles by truck between 2010 and 2015. This activity is currently suspended due to the events of 2014.

Access to the WIPP site is provided by two roads that connect with U.S. Highway 62/180, 13 miles to the north, and New Mexico Highway 128, four miles to the south. The north access road is used to transport TRU Mixed Waste from U.S. Highway 62/180 to the site. The north access road is used as the primary transportation route by personnel, agents, and contractors of the DOE on official business related to the WIPP and by personnel, permittees, licensees, or lessees of the BLM. The south access road is a multiple-use access. Both roads are maintained by the DOE.

There are several oil and gas wells around the periphery of the WIPP site boundary. One gas pipeline is within the WIPP site boundary, oriented northeast–southwest, and is about 1.2 miles north of the center of the WIPP PPA at its closest point.

The areas that have been designated as subdivisions within the WIPP site boundary are defined below and depicted in Figure 1.3-3.

The WIPP Land Withdrawal Area (WIPP site boundary) is 16 square miles and contains 10,240 acres. The evaluation guideline is applied at the WIPP site boundary, which is 2.9 kilometers from the UG and the WHB ventilation exhausts.

The Off-limits Area is an area of 1,454 acres that contains the Exclusive Use Area (EUA) and the PPA. This area is posted “No Trespassing,” but it is leased for grazing, and hunting is allowed.

The EUA is an area of 290 acres that contains the PPA. It is surrounded by a barbed wire fence, posted no trespassing, and restricted to DOE use only.

The WIPP PPA is an area of 35 acres surrounded by a chain link fence topped with barbed wire. The PPA boundary is the public exclusion and access control point controlled by the WIPP site 24-hour security force. Within the PPA, access is restricted to employees and approved visitors. A zone provided between the mined area underground and the WIPP site boundary is a minimum of 1 mile wide. This horizontal

distance was specified based on recommendations made by the Oak Ridge National Laboratory (ORNL). The ORNL recommendation of 1 to 5 miles for the size of the zone of intact salt was to preclude unacceptable penetration of the salt formation. The ORNL stated that the actual size of the zone must be based on site-dependent factors including drilling operations, mining operations, and salt dissolution rates. This was addressed in *Geological Characterization Report, Waste Isolation Pilot Plant Site, Southeastern New Mexico* (SAND 78-1596), where the authors state that the 1-mile thickness should provide more than 250,000 years of isolation using very conservative dissolution assumptions.

1.3.1.2 Exclusion Area Land Use and Control

On October 30, 1992, the LWA transferred the land from the U.S. Department of the Interior to the DOE. Consistent with the WIPP mission, lands within and around the WIPP site boundary are administered according to a multiple land-use policy. During operations, the area within the WIPP site boundary will remain under federal control.

The *Waste Isolation Pilot Plant Land Management Plan* (DOE/WIPP 93-004) allows public access to the WIPP 16-section area up to the DOE EUA for grazing purposes and up to the DOE Off-limits Area for recreational purposes. Public access is controlled at the PPA by the WIPP site 24-hour security force.

The DOE will not permit subsurface mining, drilling, or resource exploration unrelated to the WIPP operation within the site boundary during facility operations, during the period of active institutional controls, or after decommissioning. Mining and drilling are prohibited within the site boundary by the LWA, except for purposes that support the WIPP. This prohibition precludes slant drilling under the WIPP site from within or outside the site, with the exception of existing rights under federal oil and gas leases (No. NM 02953 and NM 02953C). These leases should not be affected unless a determination is made to require the acquisition of such leases to comply with final disposal regulations or with the *Solid Waste Disposal Act of 1976* (Public Law 94-580).

Within the PPA, access is restricted to employees and approved visitors. Within the EUA, access is restricted to authorized personnel and vehicles. In addition, small areas have been fenced to control access to material storage areas, borrow pits, the sewage stabilization ponds, and biological study plots.

1.3.1.2.1 Agricultural Uses

The 5-mile radius encompasses grazing allotments of ranching operations. All the land within the WIPP site boundary (except for the EUA) has been leased for grazing, which is the only significant agricultural activity in the vicinity of the WIPP site. Grazing operates within the authorization of the *Taylor Grazing Act of 1934* (43 USC 315), the *Federal Land Policy and Management Act of 1976* (43 USC 1701–1782), the *Public Rangelands Improvement Act of 1978* (43 USC 1904), and the *Bankhead-Jones Farm Tenant Act of 1937* (7 USC 1010–1012). Portions of two grazing allotments administered by the BLM fall within the Land Withdrawal Area: Livingston Ridge (No. 77027) and Antelope Ridge (No. 77032) (DOE/WIPP 93-004). The Smith Ranch, owned by Kenneth Smith Inc. of Carlsbad, New Mexico, has lease rights to 2,880 acres within the northern portion of the WIPP site boundary. S.C. Mills of Loving, New Mexico, owner of the Mills Ranch, has lease rights to 7,360 acres within the southern portion of the WIPP site boundary. The Mills ranch house is located 1 mile outside the WIPP site boundary.

1.3.1.2.2 Water Use

Uses of surface or groundwater in the vicinity of the WIPP site include several windmills throughout the area to pump groundwater for livestock and several ponds to capture runoff for livestock. The WIPP fire and potable water are obtained via a 10-inch water pipeline managed by the City of Carlsbad.

1.3.2 Demography

The WIPP site is located 26 miles east of Carlsbad in Eddy County, near Lea County. The population of Eddy County is 53,829 with the most populated town being Carlsbad, with a population of 26,138. The population of Lea County is 64,727 with the most populated town being Hobbs, with a population of 34,122. The permanent residence nearest to the WIPP site boundary is the S.C. Mills Ranch, which is 1 mile to the south. The population numbers are taken from the 2010 census (USDOC 2010).

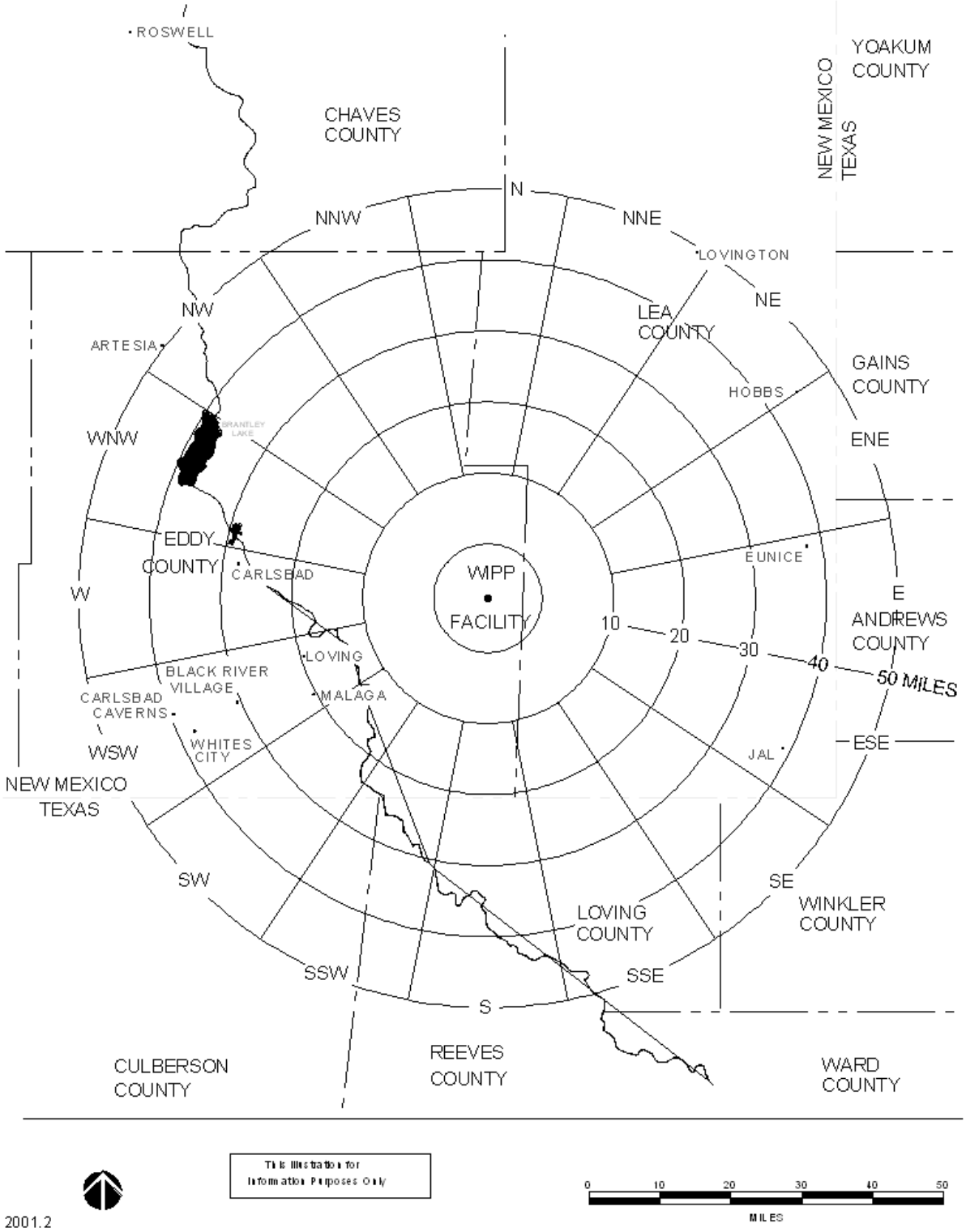

Figure 1.3-1. Region Surrounding the WIPP Site

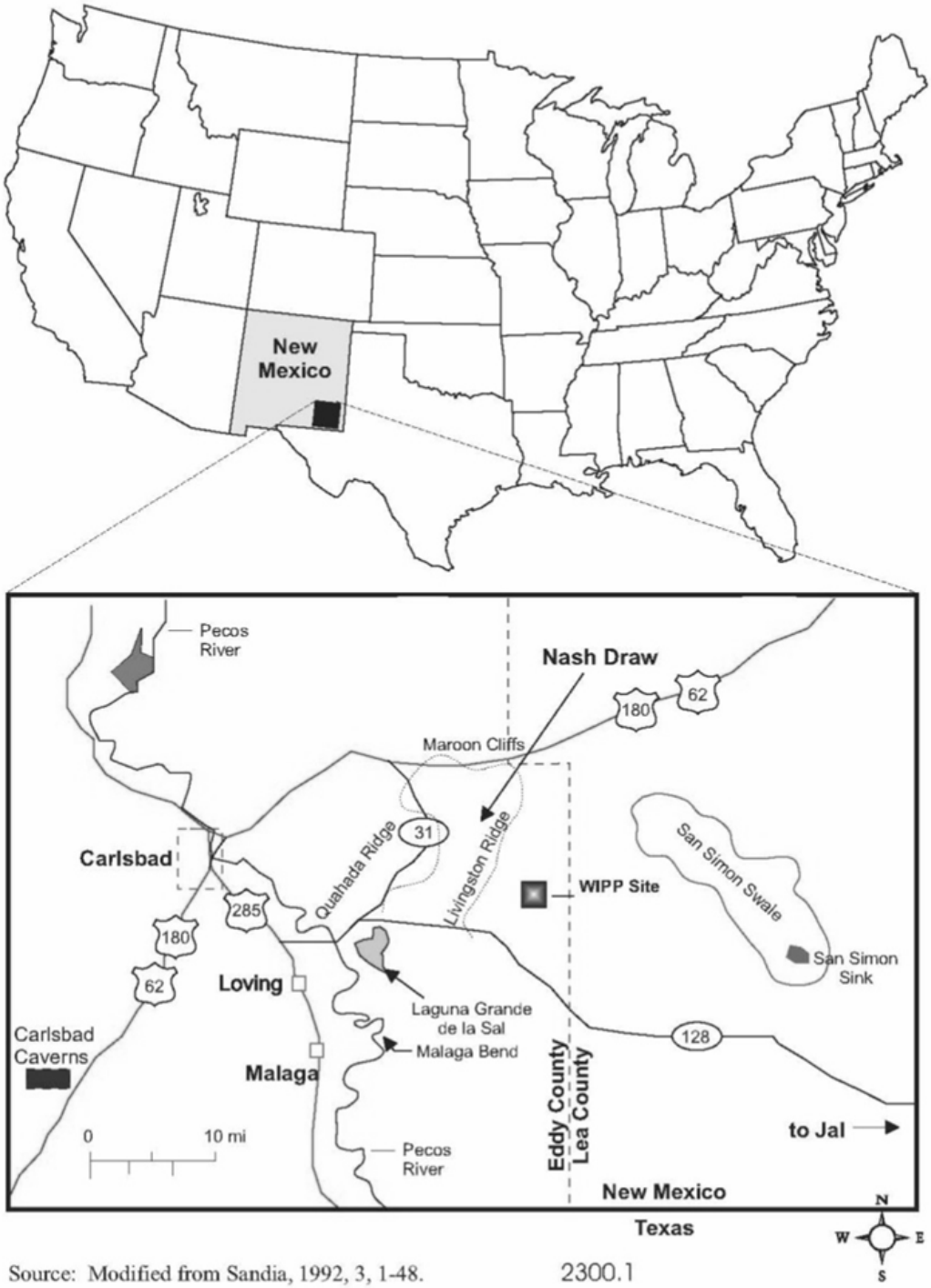

Figure 1.3-2. WIPP Location in Southeastern New Mexico

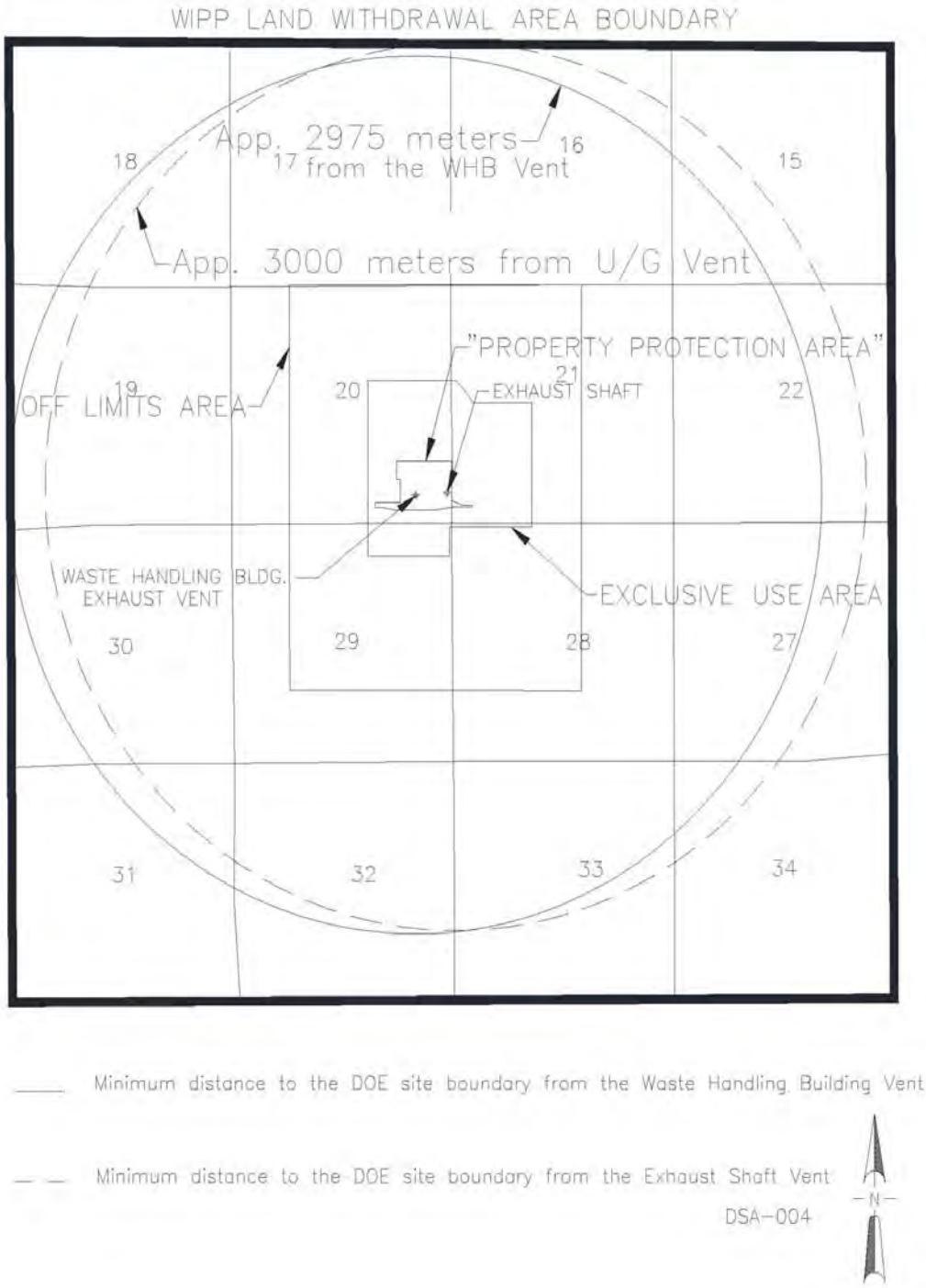

Figure 1.3-3. WIPP Site Boundary Area

1.4 ENVIRONMENTAL DESCRIPTION

1.4.1 Meteorological Conditions for Design and Operating Bases

The climate of the region is semiarid, with generally mild temperatures, low precipitation and humidity, and a high evaporation rate. Winds are mostly moderate and from the southeast. In late winter and spring, there are strong west winds and dust storms. During the winter, the weather is often dominated by a high-pressure system situated in the central portion of the western United States and a low-pressure system located in north-central Mexico. During the summer, the region is affected by a low-pressure system normally situated over Arizona (DOE/EIS-0026, *Final Environmental Impact Statement, Waste Isolation Pilot Plant*).

1.4.1.1 Precipitation Summary

Precipitation at the WIPP is light and unevenly distributed throughout the year, averaging 13 inches annually (NOAA 1976, *Climatological Data National Summary*). Winter is the season of least precipitation, averaging less than 0.6 inch of rainfall per month. Snow averages about 5 inches per year at the site and seldom remains on the ground for more than a day at a time due to the typically above-freezing temperatures in the afternoon. Approximately half the annual precipitation comes from frequent thunderstorms in June through September. Rains are usually brief, but occasionally intense, when moisture from the Gulf of Mexico spreads over the region (DOE/EIS-0026). The WIPP region has about one day of freezing rain or drizzle a year (Hull 1958, *Hail Size and Distribution*), during which an ice accumulation of 0.25 inch is typical.

At the time the WIPP site location was selected, the maximum recorded 24-hour rainfall near the WIPP site was 5.65 inches in Roswell during November 1901 (USDOC 1963, *Maximum Recorded United States Point Rainfall for 5 Minutes to 24 Hours at 207 First Order Stations*). The maximum recorded 24-hour snowfall was 15.3 inches in Roswell during December 1960. The heaviest recorded snowfall during a one-month period was 23.3 inches in Roswell during February 1905 (NOAA 1974, *Climates of the States*).

Based on the *Waste Isolation Pilot Plant Annual Site Environmental Report for 2013* (DOE/WIPP 14-3532), the total precipitation at the WIPP site for 2013 was 8.87 inches.

The 100-year recurrence maximum snowpack for the WIPP region is 10 pounds per square foot (lb/ft^2) (ANSI A58.1-1972, *Building Code Requirements for Minimum Design Loads in Buildings and Other Structures*). The probable maximum winter precipitation in the WIPP region is taken to be the probable maximum 48-hour precipitation during the winter months of December through February. The probable maximum winter precipitation for the WIPP region is estimated to be 12.8 inches of rain (i.e., 66 lb/ft^2) (USDOC 1956, *Seasonal Variations of the Probable Maximum Precipitation East of the 105th Meridian for Areas from 10 to 1,000 Square Miles and Durations of 6, 12, 24 and 48 Hours*; HHFA 1956, *Snow Load Studies*). The snow load for the WIPP region is calculated (ground-level equivalent) to be 27 lb/ft^2. Specific roof loads are estimated based on American National Standards Institute (ANSI) methodology (ANSI A58.1-1972).The region has about 40 thunderstorm days annually. About 87.5 percent of these occur from May to September (USDOC 1963). A thunderstorm day is recorded if thunder is heard, but the thunderstorm record is not related to observations of rain or lightning and does not indicate the severity of storms in the region. Hail usually occurs in April through June and is not likely to develop more than three times a year. During a 39-year period at Roswell, hail was observed 97 times (about twice per year), occurring nearly two-thirds of the time between April and June (Hull 1958). For the 1 square degree (32 to 33 °N by 103 to 104 °W) surrounding the WIPP site, hailstones 0.75 inch and larger were

reported eight times from 1955 to 1967 (slightly less than once per year). There were no significant hailstorms noted in DOE/WIPP 14-3532.

1.4.1.2 Tornadoes

For the period 1916 through 1958, 75 tornadoes were reported in New Mexico on 58 tornado days (USDOC 1960, *Tornado Occurrences in the United States*). Data for 1953 through 1976 indicate a statewide total of 205 tornadoes on 152 tornado days (NOAA 1976), or an average of 9 tornadoes per year on 6 tornado days. The greatest number of tornadoes in one year was 18 in 1972; the least was none in 1953. The average tornado density in New Mexico during this period was 0.7 per 1,000 square miles. Most tornadoes occur in May and June (Pautz 1969, *Severe Local Storm Occurrence, 1955–1967*). From 1955 through 1967, 15 tornadoes were reported within the 1 square degree containing the WIPP surface facility (Markee et al. 1974, *Technical Basis for Interim Regional Tornado Criteria*).

H.C.S. Thom has developed a procedure for estimating the probability of a tornado striking a given point (Thom 1963, "Tornado Probabilities"). The method uses a mean tornado path length and width and a site-specific frequency. Applying Thom's method to the WIPP yields a point probability of 0.00081 on an annual basis, or a recurrence interval of 1,235 years. An analysis by Fujita yields a point tornado recurrence interval of 2,832 years in the Pecos River Valley (Fujita 1978, *A Site-Specific Study of Wind and Tornado Probabilities at the WIPP Site in Southeast New Mexico*).

According to Fujita, the WIPP Design Basis Tornado (DBT) with a 1-million-year return period has a maximum wind speed of 183 miles per hour (mph), translational velocity of 41 mph, a maximum rotational velocity radius of 325 feet, a pressure drop of 0.5 pound per square inch (psi), and a pressure drop rate of 0.09 psi per second. There has never been a recorded tornado touchdown at WIPP.

1.4.1.3 Winds

The maximum one-minute wind speeds recorded at Roswell are shown in Table 1.4-1. The fastest one-minute wind ever recorded at Roswell was 75 mph from the west in April 1953 (USDOC 1968, *Weather Atlas of the United States* (originally titled *Climatic Atlas of the United States*)). Windstorms with speeds of 58 mph or more occurred 10 times during the period between 1955 and 1967 (USDOC 1968). The mean recurrence interval for annual high winds at 30 feet above the ground in southeastern New Mexico is shown in Table 1.4-2 (ANSI A58.1-1972; Thom 1963). The 100-year-recurrence 30-foot-level wind speed in southeastern New Mexico is 82 mph. Based on a gust factor of 1.3 (DGAF 140, *Relations between Gusts and Average Wind Speeds for Housing Load Determination*), the highest instantaneous gust expected once in 100 years at 30 feet is 107 mph. The vertical wind profile for a 100-year recurrence interval has been estimated from the 30-foot values and is presented in Table 1.4-2.

Table 1.4-1. Maximum Wind Speeds for Roswell, New Mexico

Month	Maximum Wind Speed (mph)	Month	Maximum Wind Speed (mph)
January	67	July	66
February	70	August	72
March	66	September	54
April	75	October	66
May	72	November	65*
June	73	December	72

Source: NOAA 1974.
* Occurred more than once.

Table 1.4-2. Recurrence Intervals for High Winds in Southeastern New Mexico

Recurrence Years	Speed (mph) at Elevations			
	30 feet	50 feet	100 feet	150 feet
2	58	62	65	73
10	68	73	81	86
25	72	77	86	91
50	80	86	95	101
100	82	88	97	103

Source: Sutton 1953, *Micrometeorology*.

The predominant wind direction at the WIPP site is from the southeast. The current revision of the *Documented Safety Analysis Unit Consequence Analysis* (WIPP-002) describes the wind speed data used for accident consequence calculations. The straight-line wind design is for 110 mph at 30 feet aboveground.

1.4.1.4 Dust Storms

Blowing dust or sand may occur in the region due to the combination of strong winds, sparse vegetation, and the semiarid climate. High winds associated with thunderstorms are frequently a source of localized blowing dust. Dust storms covering an extensive area occur occasionally and may reduce visibility to less than 1 mile. Winds of 50 to 60 mph and higher may persist for several days if the strongest pressure gradients, which are most likely to occur during winter and early spring, become stationary (NOAA 1974).

1.4.1.5 Temperature Summary

Temperatures are moderate throughout the year, although seasonal changes are distinct. The mean annual temperature in southeastern New Mexico is 63°F (17.2°C). In the winter (December through February), nighttime lows average near 23°F (−5°C), and daytime highs average about 55°F (12.7°C). The lowest

recorded temperature at the nearest Class A weather station in Roswell was −29 °F (−33.8°C) in February 1905. In the summer, the daytime temperature exceeds 90°F (32.2°C) approximately 75 percent of the time (DOE/EIS-0026). On June 27, 1994, the National Weather Service documented a temperature of 122°F (50°C) at the WIPP site as the record high temperature for New Mexico. Based on *Waste Isolation Pilot Plant Annual Site Environmental Report for 2010* (DOE/WIPP 11-2225), the mean monthly temperatures for the WIPP in 2010 ranged from 82.04°F (23°C) during June and 42.04°F (5.58°C) in January. The lowest recorded temperature was 17.65°F (-7.97°C) in January and the maximum high temperature was 106.25°F (41.25°C) in June.

1.4.1.6 Site Meteorological Tower

The WIPP site meteorological tower and station is located 1,970 feet northeast of the WHB. The meteorological station measures and records wind speed, wind direction, and temperature at elevations of 6.5, 33, and 165 feet (2, 10, and 50 meters). The data are measured and recorded continually and then downloaded into a database in 15-minute averages. The data are validated and certified by a Certified Meteorologist, which is required for use for atmospheric dispersion calculations.

1.4.2 Hydrology

Surface and ground hydrology information is described in DOE/CAO 1996-2184. No major surface water bodies are located within 10 miles of the WIPP site. Several bodies of water, including Brantley Lake and Lake Carlsbad, are over 30 miles to the north of the WIPP site. Brantley Lake and Lake Carlsbad are at approximate elevations of 3,245 feet and 3,097 feet, respectively. The elevation of the WIPP surface is 3,410 feet above mean sea level; however, surface runoff from the WIPP site does not flow north. The Pecos River is about 12 miles west of the WIPP site at its closest point. In the vicinity of the WIPP site, there are limited occurrences of potable water and several water-bearing zones produce poor quality water. In the immediate vicinity of the WIPP site, groundwater above the Salado Formation is commonly of such poor quality that it is not usable for most purposes. There is shallow groundwater at the WIPP site. Hydrological characteristics of the WIPP site do not pose any operational safety hazards.

1.4.3 Geology

The land surface in the vicinity of the WIPP site is a semiarid, windblown plain sloping gently to the west and southwest. Its surface is characterized by an abundance of sand ridges and dunes. The average slope within a 3-mile radius is about 50 feet per mile from the east to west.

Some of the tectonic structures of the region are shown in Figure 1.4-1, with the hatched lines indicating boundaries between the Central Basin Platform, the Midland Basin, and the Delaware Basin and the solid lines indicating pre-Permian Age faults. Most of the large-scale structures, including the Central Basin Platform, the Midland Basin, and the Delaware Basin, developed from the late Pennsylvanian to early Permian time, about 270 million years ago.

The WIPP site is located in the Delaware Basin, a sub-basin of the Permian Basin about 60 miles east of the western margin of the Permian Basin. The geologic structure and tectonic pattern of the Permian Basin are chiefly the result of large-scale subsidence and uplift during the Paleozoic era (about 305 to 225 million years ago). The Permian Basin is divided into sub-basins that passed through their last stage of significant subsidence during the late Permian Age, about 230 million years ago.

All major tectonic elements of the Delaware Basin were essentially formed prior to deposition of the Permian evaporites, and the region has been relatively stable since then. Deep-seated faults are rare,

except along the western and eastern basin margins, and there is no evidence of young, deep-seated faults inside the basin. A detailed description of the west Texas and southeast New Mexico geologic structures and tectonics is contained in a Sandia National Laboratories report (SAND 78-1596).

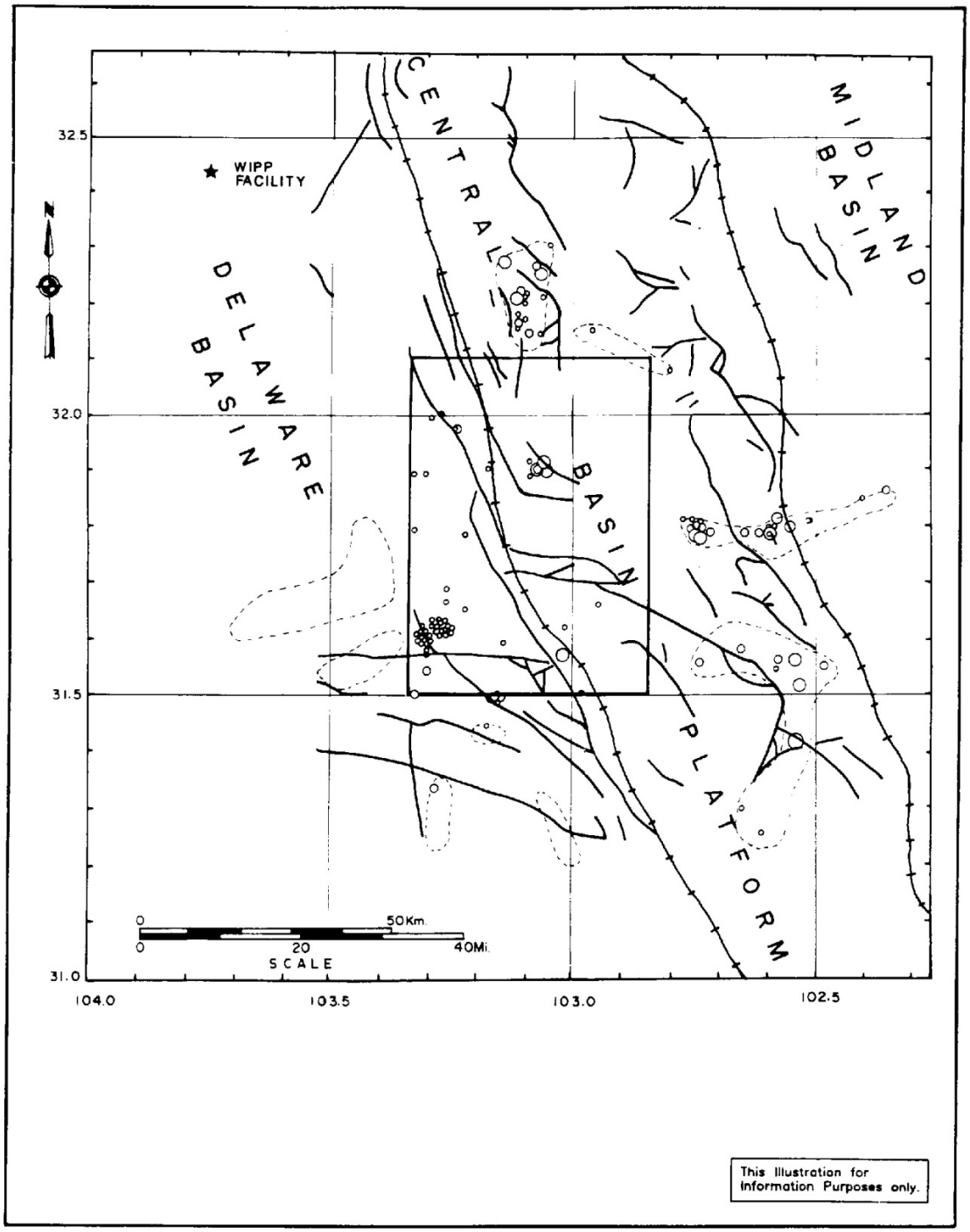

Figure 1.4-1. Tectonic Structures of Southeastern New Mexico

1.5 NATURAL EVENT ACCIDENT INITIATORS

1.5.1 Earthquakes

Tectonic activity was used as a siting criterion for the WIPP to ensure that faulting and igneous activity do not jeopardize waste isolation over the long term and to avoid areas where earthquakes could impact facility design and operations. The location of the WIPP site met both aspects of the siting tectonic activity criterion. Several seismic studies (Sanford and Toppozada 1974, *Seismicity of Proposed Radioactive Waste Disposal Site in Southeastern New Mexico*; Sanford et al. 1978, *Seismic Studies of the Los Medanos Area in Southeastern New Mexico*; and Sanford et al. 1980, *Seismicity in the Area of the Waste Isolation Pilot Project (WIPP)*) were conducted to predict ground motions that the site may be subjected to during its operational and long-term disposal phases.

This section discusses earthquake magnitude and intensity and the peak acceleration and recurrence interval that define the Design Basis Earthquake (DBE) for WIPP. In this section, earthquake magnitudes are reported in terms of the Richter scale, shown in Table 1.5-1, and intensities are based on the modified Mercalli intensity scale (Wood and Neumann 1931, “Modified Mercalli Intensity Scale of 1931”) shown in Table 1.5-2. The results from this section are applied to the seismic design of the WIPP structures and equipment.

Table 1.5-1. Richter Scale

Magnitude	Description
Less than 2	Very seldom ever felt
2.0 to 3.4	Barely felt
3.5 to 4.2	Felt as a rumble
4.3 to 4.9	Shakes furniture; can break dishes
5.0 to 5.9	Dislodges heavy objects; cracks walls
6.0 to 6.9	Considerable damage to buildings
7.0 to 7.3	Major damage to buildings; breaks underground pipes
7.4 to 7.9	Great damage; destroys masonry and frame buildings
Above 8.0	Complete destruction; ground moves in waves

Table 1.5-2. Modified Mercalli Intensity Scale

Intensity	Description
I.	Not felt except by a very few under especially favorable circumstances.
II.	Felt only by a few persons at rest, especially on upper floors of buildings. Delicately suspended objects may swing.
III.	Felt quite noticeably indoors, especially on upper floors of buildings, but many people do not recognize it as an earthquake. Standing motor cars may rock slightly. Vibration like the passing of a truck. Duration estimated.
IV.	During the day, felt indoors by many, outdoors by few. At night, some awakened. Dishes, windows, and doors disturbed; walls make a cracking sound. Sensation like a heavy truck striking a building. Standing motor cars rock noticeably.
V.	Felt by nearly everyone; many awakened. Some dishes, windows, etc., broken; a few instances of cracked plaster; unstable objects overturned. Disturbance of trees, poles, and other tall objects sometimes noticed. Pendulum clocks may stop.
VI.	Felt by all; many frightened and run outdoors. Some heavy furniture moved; a few instances of fallen plaster or damaged chimneys. Damage slight.
VII.	Everybody runs outdoors. Damage negligible in buildings of good design and construction; slight to moderate in well-built ordinary structures; considerable in poorly built or badly designed structures; some chimneys broken. Noticed by persons driving motor cars.
VIII.	Damage slight in specially designed structures; considerable in ordinary substantial buildings with partial collapse; great in poorly built structures. Panel walls thrown out of frame structures. Fall of chimneys, factory stacks, columns, monuments, walls. Heavy furniture overturned. Sand and mud ejected in small amounts. Changes in well water. Disturbs persons driving motor cars.
IX.	Damage considerable in specially designed structures; well-designed frame structures thrown out of plumb; great in substantial buildings with partial collapse. Buildings shifted off foundations. Ground cracked conspicuously. Underground pipes broken.
X.	Some well-built wooden structures destroyed; most masonry and frame structures destroyed with foundations; ground badly cracked. Rails bent. Landslides considerable from riverbanks and steep slopes. Shifted sand and mud. Water splashed (slopped) over banks.
XI.	Few, if any, structures (masonry) remain standing. Destroyed bridges, broad fissures in ground. Underground pipelines completely out of service. Earth slumps and land slips in soft ground. Rails bent greatly.
XII.	Damage total. Waves seen on ground surfaces. Lines of sight and level distorted. Objects thrown upward into the air.

Source: Wood and Neumann 1931.

1.5.1.1 Seismic History

Seismic history data are divided into two time frames: prior to and after the time when instrumented seismographic data for the region became available.

Seismic information for New Mexico prior to 1962 was not instrumented and was derived from chronicles of the effects of earthquakes on people, structures, and surface features. Seismic activity in New Mexico reported prior to 1962 was mostly limited to the Rio Grande Rift between Albuquerque and Socorro. The pre-1962 earthquake data indicate that 20 earthquakes with maximum reported intensities between III and VIII on the modified Mercalli intensity scale (Wood and Neumann 1931) have occurred within a 186-mile radius of the WIPP region from 1923 to 1960. With the exception of several weak shocks (reported in 1926, 1936, and 1949 and felt in Carlsbad), most known earthquakes prior to 1962 occurred to the west and southwest of the WIPP site more than 99 miles away. A listing of pre-1962

earthquakes can be found in Table 5.2-1 of the Sandia National Laboratories Geological Characterization Report for WIPP (SAND 78-1596).

Since 1962, seismograph data for New Mexico and the WIPP site has become comprehensive enough to locate the epicenters of the earthquakes occurring in the WIPP site region. Accelerometers were installed at the WIPP, one on the surface and one in the UG, in 1990. Two seismic events of magnitude 5.0 or greater on the Richter scale have occurred in the WIPP site region since 1962. The magnitude 5.0 Rattlesnake Canyon Earthquake occurred on January 2, 1992, with its epicenter 37 miles east–southeast of the WIPP site. The Marathon, Texas, earthquake, with a magnitude of 5.7, occurred on April 14, 1995. The Marathon Earthquake epicenter was 149 miles southeast of the WIPP site. At a distance of 149 miles, an event of magnitude 5.7 would produce a maximum acceleration at the WIPP site of less than 0.01 g. Neither earthquake had any effect on the WIPP structures and neither was detected by the two site accelerometers.

Seismic activity within 186 miles of the WIPP site is currently monitored by seismographs installed and operated by the New Mexico Institute of Mining and Technology (NMIMT). A network of nine seismograph stations (Figure 1.5-1) continuously monitors the seismographic activity occurring in eastern New Mexico. Data from each station are electronically transmitted to the NMIMT Seismological Observatory in Socorro, New Mexico. The recorded data are then compiled into a quarterly report on the seismicity of the WIPP site by the Geophysical Research Center of NMIMT and sent to NWP.

Based on the four quarterly reports for 2013, the largest seismic event recorded was a 2.5 magnitude event located about 173 miles northwest of the WIPP site. The closest seismic event recorded had a 1.1 magnitude and was located about 20 miles northwest of the site. The events did not produce a ground motion at the WIPP site larger than 0.01 g and had no observable effect on WIPP structures. A listing of earthquake occurrences including date, time, magnitude, and epicenter location can be found in the earthquake database maintained by the *Delaware Basin Drilling Surveillance Plan* (WP 02-PC.02).

1.5.1.2 Seismic Risk

The seismic risk analysis for the WIPP siting, completed in 1978, used procedures for the determination of earthquake probabilistic design parameters (WCEE 1966, “The Major Influences on Seismic Risk”; Cornell and Merz 1975, “A Seismic Risk Analysis of Boston”). In typical seismic risk analyses, the region of study is divided into seismic source areas such as the Central Basin Platform, Rio Grande Rift, and Delaware Basin. Future seismic events are considered equally likely to occur at any location within those areas. For each seismic source area, the rate of occurrence of events above a chosen threshold is estimated using the frequency of historical events. The sizes of successive events in each source are assumed to be independent and exponentially distributed. The maximum possible size of events for each source is determined using judgment and the historical record. All assumptions underlying a measure of earthquake risk derived from this type of analysis are explicit, and a wide range of assumptions may be employed in the analysis procedure.

Regional studies of earthquakes prior to 1972 in southeastern New Mexico indicate that most of the earthquakes occurred in the Central Basin Platform region near Kermit, Texas, and the area about 124 miles or more west and southwest of the WIPP site in the Rio Grande Rift. The strongest earthquake event was near Valentine, Texas, in 1931 and the closest was a 1972 magnitude 2.8 event with its epicenter 25 miles northwest of the WIPP site. The record from regional studies of events in the Rio Grande Rift is consistent with the record of Quaternary faulting in that area. Quaternary faults are geologic faults that have occurred within the last 3 million years or since the end of the Tertiary period.

Seismic instrument studies near the WIPP site since 1974 have recorded additional evidence of the seismic activity for the site and region. The data obtained are similar to that from regional studies where half of the events occur on the Central Basin Platform while most of the rest occur to the west and southwest of the site in the Rio Grande Rift. Some events occur in the general site region not in association with either the Central Basin Platform or the Rio Grande Rift.

The Central Basin Platform data showed that location as the most active seismic area within 186 miles of the WIPP site in terms of number of events. Seismic activity is equally likely to occur anywhere along the Central Basin Platform structure without regard to structural details such as pre-Permian buried faults. The lack of known Quaternary faults from the seismically active region of the Central Basin Platform indicates that large-magnitude earthquakes have not occurred within the recent geologic past in the area.

Analysis of the regional and local seismic data indicated that the 1,000-year acceleration is less than or equal to 0.06 g and the 10,000-year acceleration is less than or equal to 0.1 g. The WIPP geological characterization report (SAND 78-1596) contains the detailed seismic risk analysis performed for the WIPP siting.

1.5.1.3 Design-basis Earthquake

The term DBE is used for the design of surface confinement structures and components and is equivalent to the design earthquake used in *Guidance on the License Application, Siting, Design, and Plant Protection for an Independent Spent Fuel Storage Installation*, Regulatory Guide 3.24 (NRC 1974). The DBE is such that it produces ground motion at the WIPP site with a recurrence interval of 1,000 years.

From SAND 78-1596, the most conservative calculated estimate of the 1,000-year acceleration at the WIPP is 0.075 g. The geologic and seismic assumptions leading to this 1,000-year peak acceleration include the consideration of a Richter magnitude 5.5 earthquake at the site, a 6.0 magnitude earthquake on the Central Basin Platform, and a 7.8 magnitude earthquake in the Basin and Range sub-region. These magnitudes correspond roughly to equivalent epicentral intensity events of VII, VIII, and XI on the modified Mercalli intensity scale (Wood and Neumann 1931). These values, especially the first two, are considered quite conservative, and the other parameters used in the 0.075 g derivation are conservatively chosen. For additional conservatism, a peak design acceleration of 0.1 g is selected for the WIPP DBE. The design response spectra for vertical and horizontal motions are taken from *Design Response Spectra for Seismic Design of Nuclear Power Plants*, Regulatory Guide 1.60 (NRC 1973), with the high-frequency asymptote scaled to this 0.1 g peak acceleration value.

Mine experience and studies on earthquake damage to UG facilities (Pratt et al. 1978, *Earthquake Damage to Underground Facilities*) show that tunnels, mines, wells, etc., are not damaged for sites having peak accelerations at the surface below 0.2 g.

The DBE is the most severe credible earthquake that could occur at the WIPP site. DBE Structures, Systems, and Components (SSCs) are designed to withstand a free-field horizontal and vertical ground acceleration of 0.1 g, based on a 1,000-year recurrence period, and will retain their safety functions.

Natural Phenomena Hazards Analysis and Design Criteria for DOE Facilities (DOE-STD-1020-2012) provides that superseded standards are "…available for reference and use at existing facilities…" The WHB has been classified as Safety Significant (SS), therefore it is required to meet PC-2 criteria of *Natural Phenomena Hazards Design and Evaluation Criteria for Department of Energy Facilities* (DOE-STD-1020-2002) which refers to International Building Code (IBC) 2000 for seismic criteria which establishes a 0.06 g seismic criteria for the WIPP site as documented in *Natural Phenomena Hazard Assessment of Waste Handling Building* (CALC-15-009).

WIPP is situated in a Uniform Building Code Seismic Zone 1 region. The WHB is designed to withstand a DBE with 0.1 g peak ground acceleration (PGA) with a 1,000-year return interval. The analysis is documented in *Plant Buildings, Facilities, and Miscellaneous Equipment System Design Description (SDD)* (SDD CF00-GC00).The original facility construction, designed to survive a 0.1 g PGA with a 1,000 year return period, is more robust when compared to the current PC-2 requirements for the WIPP geological location. The 2008 or the 2014 U.S. Geological Survey national hazard map shows that at the WIPP site (UBC Seismic Zone 1), a 0.1 g PGA would have approximately a 2500-year return interval. A 1,000-year return interval would require the WHB to survive a significantly lower PGA of approximately 0.06.

In June of 2009, a re-assessment of Natural Phenomena Hazard (NPH) was performed on the WHB in accordance with the applicable revision of DOE Order 420.1. The assessment verified no changes to NPH intensities and no significant changes in WHB SSCs.

The adjacent TRUPACT Maintenance Facility (TMF) is also constructed to withstand the 0.1 g DBE. The adjacent Support Building (office building) is designed so that its main lateral force resisting structural members prevent these structures from collapsing on the WHB during a DBE.

1.5.2 Design-basis Tornado

New Mexico has an average of nine tornadoes per year, with most occurring in May and June (Pautz 1969). Although tornados have occurred within the 1 square degree containing the WIPP surface facility, none have touched down at the WIPP site. See Section 1.4.1.2 for more information.

The DBT is the most severe credible tornado that could occur at the WIPP site. DBT SSCs at the WIPP site are designed to withstand 183 mph winds with a translational velocity of 41 mph, a maximum rotational velocity radius of 325 feet, a pressure drop of 0.5 psi, and a pressure drop rate of 0.09 psi per second generated by the DBT, based on a 1-million-year recurrence period, and will retain their safety function (Fujita 1978).

DOE-STD-1020-2012 provides that superseded standards are "…available for reference and use at existing facilities…" The WHB has been classified as SS, therefore it is required meet PC-2 criteria of DOE-STD-1020-2002 which refers to IBC 2000 for tornado criteria. IBC 2000 does not establish tornado criteria for the WIPP site as documented in CALC-15-009.

The tornado wind load characteristics of the DBT are based on the recommendations in MRP No. 155, *A Site-Specific Study of Wind and Tornado Probabilities at the WIPP Site in Southeast New Mexico*. The DBT characteristics were evaluated to be a tornado of 183 mph winds with a translational velocity of 41 mph, tangential velocity of 124 mph, a maximum rotational velocity radius of 325 feet, a pressure drop of 0.5 psi and a pressure drop rate of 0.09 psi per second, with a return period of 106 years.

In June of 2009, a re-assessment of NPH was performed on the WHB in accordance with the applicable revision of DOE Order 420.1. The assessment verified no changes to NPH intensities and no significant changes in WHB SSCs.

1.5.3 Design-basis Wind

Based on the discussion in Section 1.4.1.3, the design wind velocity for the WHB is 110 mph at 30 feet aboveground. The wind velocity selected, with a 1,000-year mean recurrence interval, is adopted from the results of a site-specific wind and tornado study (Fujita 1978). The design wind velocity exceeds the basic wind velocity specified in ANSI Standard A58.1-1972 for the geographical location of the WIPP facility.

The design wind velocity for other WIPP structures is 91 mph, with a 50-year mean recurrence interval, except for the Support Building and EFB, which is 99 mph with a 100-year mean recurrence interval.

DOE-STD-1020-2012 provides that superseded standards are "…available for reference and use at existing facilities…" The WHB has been classified as SS, therefore it is required to meet PC-2 criteria of DOE-STD-1020-2002 which refers to IBC 2000 for high wind criteria which establishes a 90 mph wind for the WIPP site as documented in CALC-15-009.

In June of 2009, a re-assessment of NPH was performed on the WHB in accordance with the applicable revision of DOE Order 420.1. The assessment verified no changes to NPH intensities and no significant changes in WHB SSCs.

1.5.4 Design-basis Snow Loading

The WHB, including the TMF and Waste Hoist Tower, is designed for a snow load of 27 lb/ft^2.

The design snow load is based on the discussion in Section 1.4.1.1, and derived by using the 100-year-recurrence snow load of 10 lb/ft^2 specified in ANSI Standard A58.1-1972. Roof snow loads are calculated by multiplying the design snow load by the appropriate coefficients (C_s) specified in Figure 5, Figure 6, and Figure 7 of ANSI A58.1-1972.

DOE-STD-1020-2012 provides that superseded standards are "…available for reference and use at existing facilities…" The WHB has been classified as SS, therefore it is required to meet PC-2 criteria of DOE-STD-1020-2002 which refers to IBC 2000 for roof loading criteria. IBC 2000 does not establish roof loading criteria for the WIPP site as documented in CALC-15-009. The snow load characteristics were evaluated to be a maximum snowpack for the WIPP region of 10 lb/ft^2 with a 100-year recurrence interval. The WHB roof is designed to withstand 27 lb/ft^2. The ability for the WHB structure to withstand the design basis snow load is based on analyses identified in SDD CF00-GC00.

In June of 2009, a re-assessment of NPH was performed on the WHB in accordance with the applicable revision of DOE Order 420.1. The assessment verified no changes to NPH intensities and no significant changes in WHB SSCs.

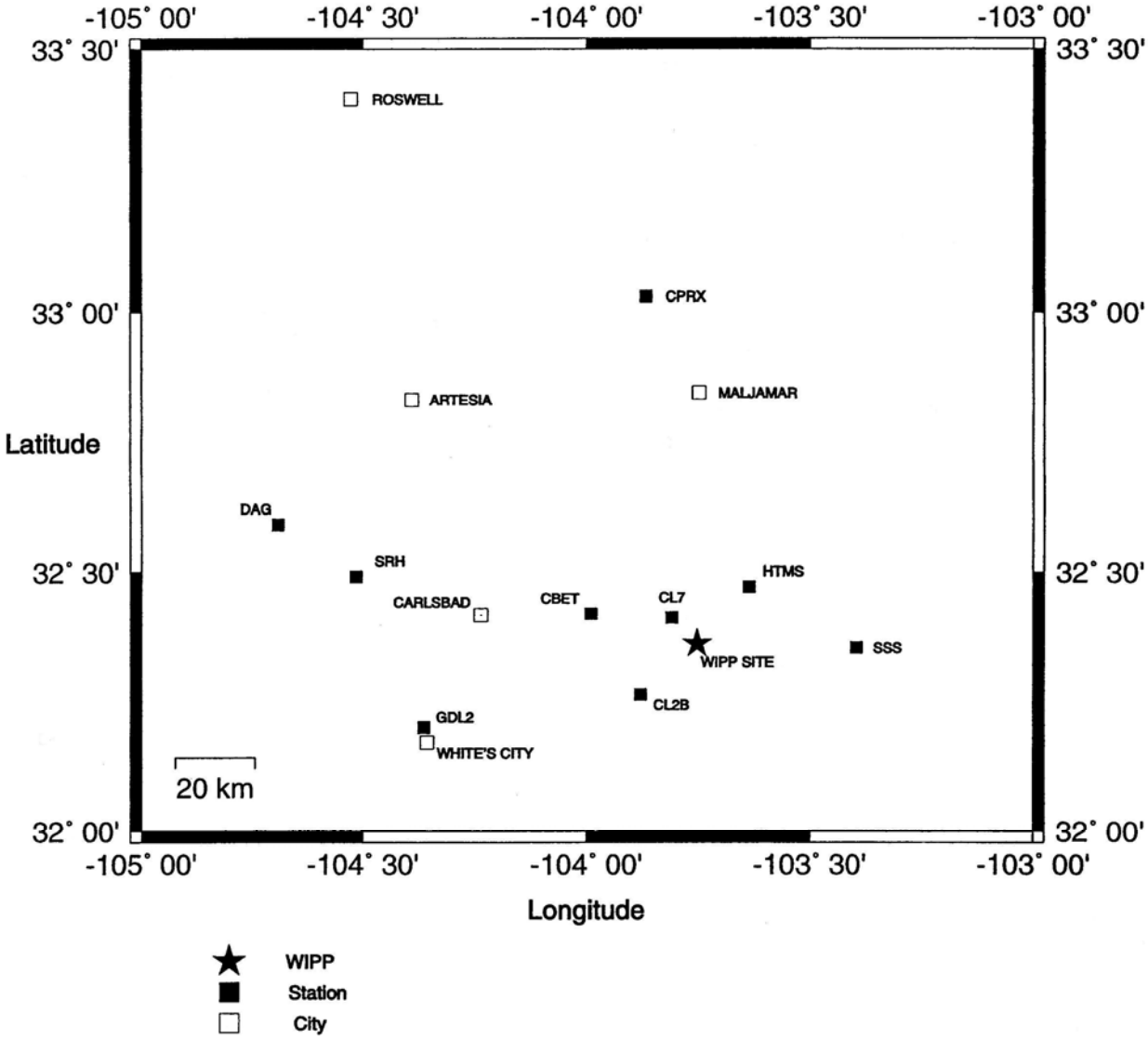

Seismograph Stations:

CBET	Carlsbad East Tower	DAG	Dagger Draw
CL7	Carlsbad Station 7	GDL2	Guadalupe Mountains
CL2B	Carlsbad Station 2B	HTMS	Hat Mesa
CPRX	Caprock	SSS	San Simon Swale
SRH	Seven Rivers Hills		

Figure 1.5-1. Seismograph Stations in the WIPP Network

1.6 MAN-MADE EXTERNAL ACCIDENT INITIATORS

1.6.1 Gas Pipeline Explosion

Mining, mined material processing, and oil- and gas-related activities are the commercial operations within 5 miles of the WIPP site. There are three potash mines and three chemical processing plants (adjacent to the mines) within 5 to 10 miles of the WIPP site.

Activities associated with oil and gas exploration, production, and transportation present the most likely man-made external accident initiators to the WIPP site due to their proximity. Figure 1.6-1 shows the location and related information of each pipeline within 5 miles of the site. There are no crude oil pipelines within 5 miles of the WIPP site; however, there are four natural gas pipelines in the vicinity of the site. One pipeline is within the WIPP site boundary, oriented northeast to southwest, and is about 1.2 miles north of the center of the WIPP surface structures at its closest point.

The three potash mines and three potash chemical processing plants located between 5 and 10 miles of the WIPP site do not present a hazard to the WIPP operations.

1.6.2 Aircraft Crash

1.6.2.1 Military Facilities

There are no military facilities within a 5-mile radius of the WIPP site boundary. Holloman Air Force Base is the nearest military facility to the WIPP site and is located 138 miles to the northwest. There are two Military Operations Areas shown on Figure 1.6-2. Both Military Operations Areas are greater than 30 miles from the WIPP and have no impact on the facility.

1.6.2.2 Airports and Aviation Routes

There are no commercial airports within a 10-mile radius of the WIPP site boundary. The nearest commercial airport is Cavern City Air Terminal, 28 miles west of the WIPP site in Carlsbad. Other airports in the area include the following:

- Eunice, 32 miles east.
- Hobbs, 42 miles northeast.
- Jal, 40 miles southeast.
- Lovington, 50 miles northeast.
- Artesia, 51 miles northwest.

The relationship of these airports to the WIPP site is shown in Figure 1.6-2. The figure also shows the historic airways applicable to WIPP during the siting and design phase.

An estimate of aircraft impact frequency and consequences at the WIPP site was performed in August 2000 and documented flight information based on input from local Carlsbad airport data, military data, and Federal Aviation Administration data. Commercial and general aviation flights into the Carlsbad Airport totaled 3,924 flights per year. Military flights prior to October 2000 were about 965 flights per year and were expected to drop due to changes in U.S. Air Force training plans.

The estimate summarized Federal Aviation Administration information that included air traffic data and flight patterns for military, commercial, and private aircraft within a 5-mile radius of the WIPP site. The data indicated little air traffic over the WIPP site, with heavier air traffic to the south and west. The proximity of the WIPP site to the United States southern border serves to limit north–south air traffic. The restricted airspace associated with the White Sands Missile Range to the west of the WIPP site causes east–west traffic to preferentially fly to the north or south of the site. The highest number of flights recorded in the data provided was 35 flights in 26 hours, which was an increase over the nominal 30 flights per day during the design phase of the WIPP site. Using the guidance in *Accident Analysis for Aircraft Crash into Hazardous Facilities* (DOE-STD-3014-1996), the calculated frequency of an aircraft impacting the WIPP site (WIPP-008, *Estimate of Aircraft Crash Frequency at the Waste Isolation Pilot Plant*) was 3.6×10^{-7}/year, indicating that the WIPP site's remote location and its proximity to the nearest airport protects it from the effects of aircraft crashes.

DOE-STD-3014-1996 was reaffirmed in 2006. An updated aircraft crash frequency report (WIPP-008) documented the application of the DOE standard to assess the frequency and consequences of an aircraft crash at the WIPP site. Because local aircraft traffic associated with Carlsbad airport is outside the range of significant take-off and landing crash frequency and did not contribute to a hazardous release from the WIPP site, the frequency estimate (WIPP-008) was based on other data as allowed by the standard (DOE-STD-3014-1996). The data used in WIPP-008 were based on non-airport crash data from the following sources:

- Generic continental United States data for commercial and military aircraft categories as provided in DOE-STD-3014-1996.
- Site-specific data for the general aviation aircraft category.
- Site-specific data for the helicopter category.

Using the standard guidance for non-airport operations, the aircraft impact frequency is 9.5×10^{-7}/year, which is below the screening guideline in DOE-STD-3014-1996. Because the frequency of an aircraft crash is below the screening guideline, the potential consequences from an aircraft crash need not be further considered for this Documented Safety Analysis (DSA).

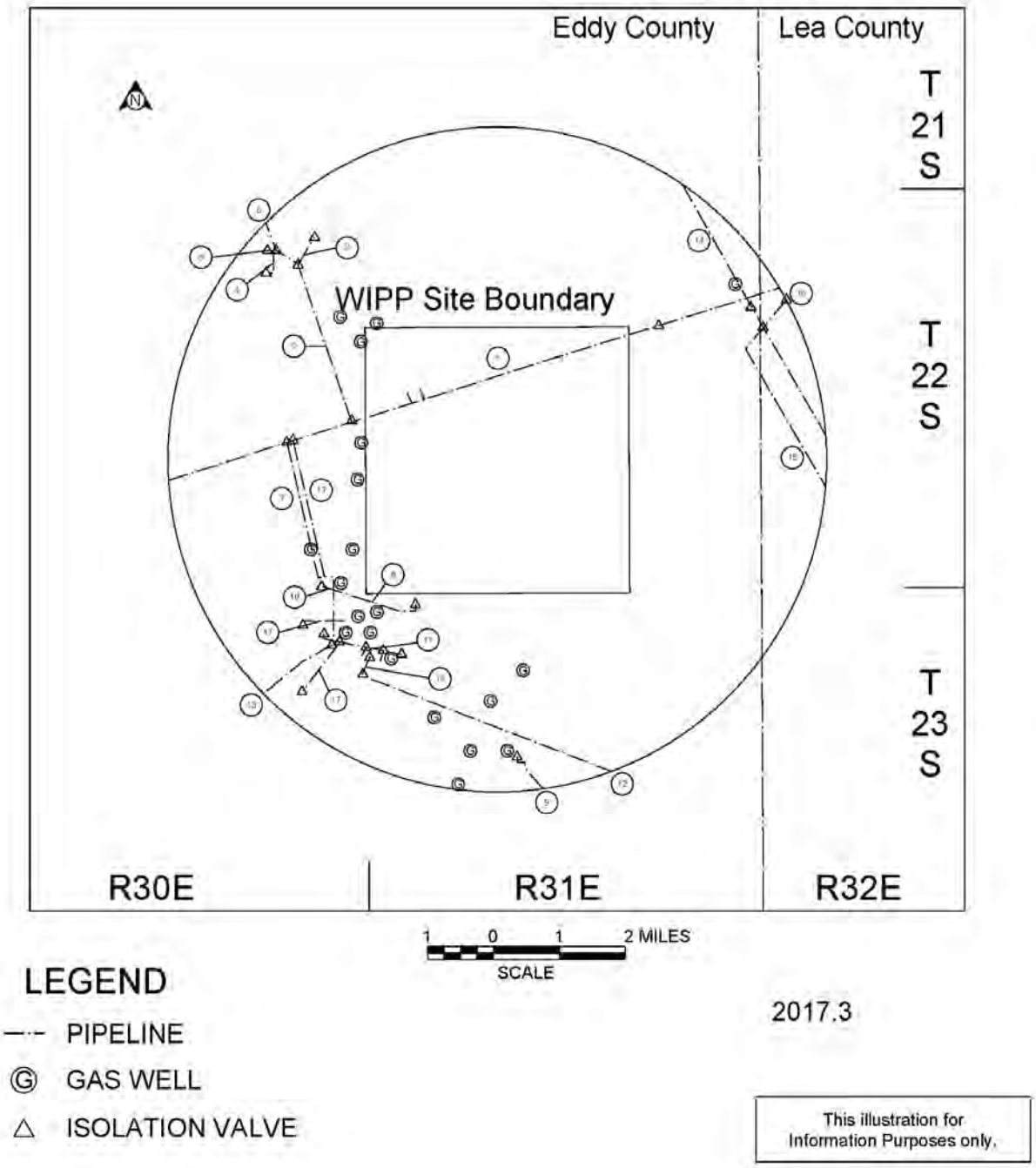

Figure 1.6-1. Natural Gas Pipelines and Wells within a 5-mile Radius of the WIPP Site

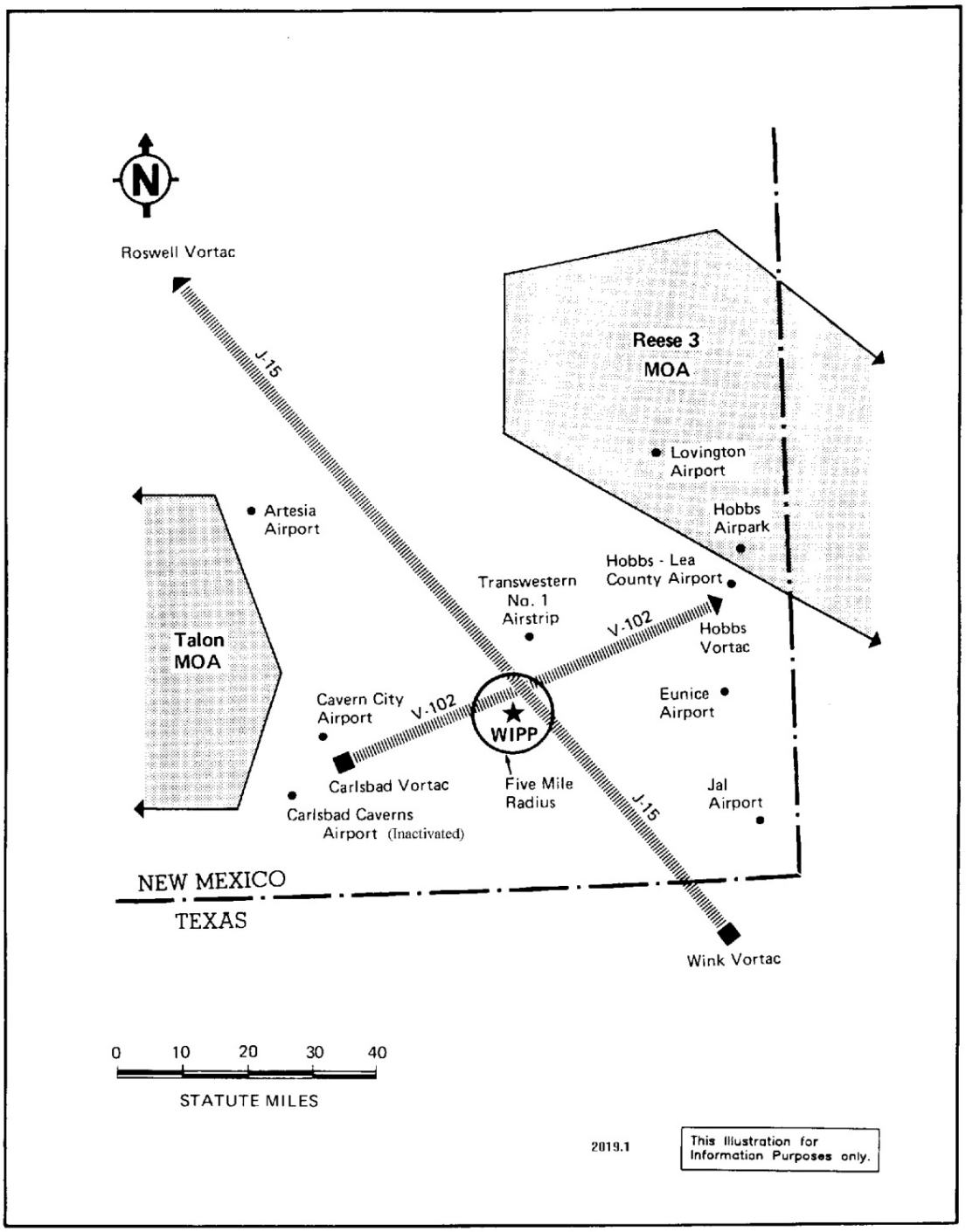

Figure 1.6-2. Airports and Aviation Routes adjacent to the WIPP Site

1.7 NEARBY FACILITIES

1.7.1 Extractive Activities

Within a 5-mile radius of the center of the LWA Area, both oil and gas are extracted below the Salado Formation. The majority of the newer wells produce oil and gas from the Brushy Canyon Formation of the Delaware Mountain Group. Gas wells typically produce from the deeper Pennsylvanian formations (Atoka, Strawn, and Morrow). There are approximately 832 oil wells (some that produced both oil and gas), 56 gas wells, and 80 plugged wells within 5 miles of the WIPP site boundary. The oil and gas well production zone is below the repository horizon (2,150 feet). There are an additional 410 oil wells, 21 gas wells, and 100 plugged wells within 10 miles of the WIPP site boundary (Figure 1.7-1). The plugged wells include wells that are considered dry holes and wells that are no longer productive. Injection wells, salt water disposal wells, and drilling wells that appear in Figure 1.7-1 are not included in the totals previously cited.

Besides the oil- and gas-producing wells, there are three active potash mines within 10 miles of the WIPP site boundary. Potash is extracted from the McNutt Potash member, which is above the WIPP repository horizon.

1.7.2 Farming and Ranching

There are approximately 300 ranches with nominally 2.6 million acres in Eddy County and 2.8 million acres in Lea County, with a nominal 100,000 to 150,000 head of livestock (USDA 2008, *New Mexico Agricultural Statistics*).

In the Carlsbad Resource Area, 160,000 acres are used for farming. The principal farm crops include cotton, alfalfa, sorghum grains, and pecans.

1.7.3 Tourism and Recreation

Recreational opportunities in the area of the WIPP site include boating, hunting, camping, horseback riding, hiking, watching wildlife, and sightseeing.

There are two national parks (Carlsbad Caverns and Guadalupe Mountains), a national forest (Lincoln), and two state parks (Living Desert Zoo and Gardens, and Brantley) located within or near Carlsbad. Carlsbad Caverns National Park, 36 miles southwest of the WIPP site, has several hundred thousand visitors per year.

1.7.4 Waterways

There are no navigable waterways within a 5-mile radius of the WIPP site. The nearest river is the Pecos River, 12 miles west of the WIPP site.

1.7.5 Land Transportation

1.7.5.1 Roads and Highways

Other than the highways that provide north or south access, only one other highway lies within a 5-mile radius of the WIPP site. New Mexico Highway 128, which is about 4.5 miles southwest of WIPP (Figure 1.3-2), connects Jal with Highway 31. Highway 128 is used by the public, ranchers, school buses,

potash miners, and oil field production/exploration equipment and vehicles. Other non-hard surfaced roads in the area are used for ranching, oil field exploration, production, maintenance equipment, and other vehicles.

1.7.5.2 Railroads

Except for the inactive rail spur on the WIPP site, there are no railroads within a 5-mile radius of the site. There are railroads that service the Mosaic Corporation Main Plant and Nash Draw operation and Intrepid Mining LLC. The nearest active railroad is 10 miles from the WIPP site. The railroad lines within the general vicinity of the WIPP site are used specifically to transport potash.

1.7.6 Projected Industrial Growth

Oil and gas exploration and production and associated support industries are the only significant economic activity forecast for the future within 5 miles of the WIPP site. Active potash mining is conducted within 10 miles of the site. No extractive activity is allowed within the LWA Area, with the exception of Section 31 (the southwest corner section of the LWA Area). One gas well, referred to as James Ranch 13, is producing from that section from a zone below the 6,000-foot LWA designation. This well was slant drilled from Section 6 of Township 23 South 31 East. There are also six oil wells that have been horizontally drilled from Section 36 of Township 22 South 30 East. Other permit applications for slant drilling into Section 31 from outside sections have been denied by the BLM. The other 15 sections of the LWA Area are withdrawn to the center of the earth.

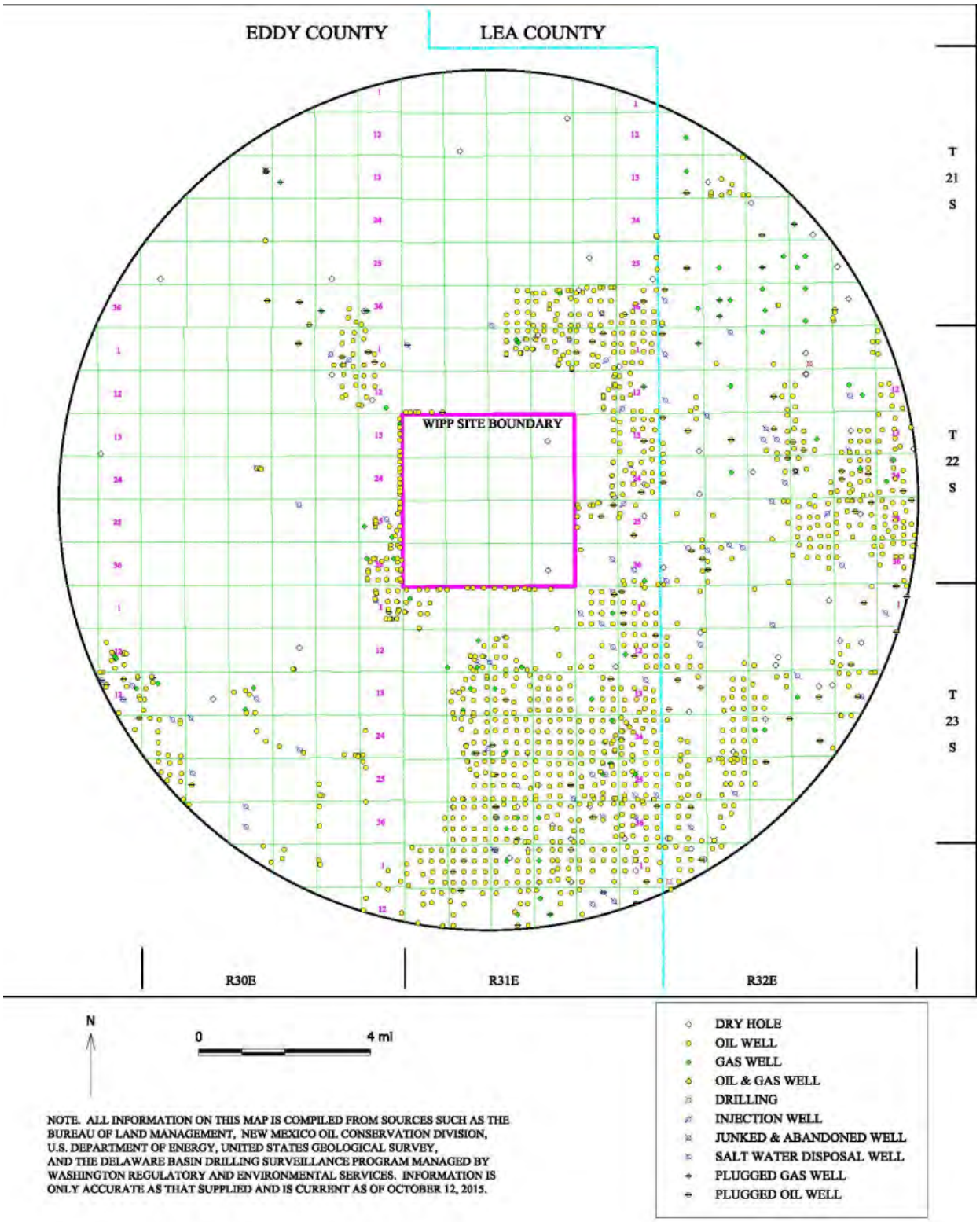

Figure 1.7-1. Natural Gas and Oil Wells within a 10-Mile Radius of the WIPP Site

1.8 VALIDITY OF EXISTING ENVIRONMENTAL ANALYSIS

Departmental Sustainability (DOE Order 436.1) describes the DOE's commitment to environmental protection and pledges to implement sound stewardship practices that are protective of the air, water, land, and other natural and cultural resources. The DOE conducts effluent monitoring and environmental surveillance to verify that the public and the environment are protected during the WIPP operations, and to ensure that operations comply with applicable federal and state requirements.

The WIPP Annual Site Environmental Report that is produced for each calendar year provides a description of the WIPP environmental monitoring program and the results of that monitoring. Based on environmental reports generated since the WIPP was constructed, there have been no environmental events that challenge the design basis for the WIPP site.

1.9 REFERENCES

46 FR 9162, 1981, "Record of Decision," *Federal Register*, Vol. 46, p. 9162 (January 23, 1981).

48 FR 31038, 1983, "Public Land Order 6403," *Federal Register*, Vol. 48, p. 31038 (July 6, 1983).

55 FR 25689, 1990, "Record of Decision," *Federal Register*, Vol. 55, p. 25689 (June 22, 1990).

7 USC 1010-1012, *Bankhead-Jones Farm Tenant Act of 1937*, et seq.

43 USC 315, *Taylor Grazing Act of 1934*, et seq.

43 USC 1701-1782, *Federal Land Policy and Management Act of 1976*, et seq.

43 USC 1904, *Public Rangelands Improvement Act of 1978*, et seq.

ANSI A58.1-1972, *Building Code Requirements for Minimum Design Loads in Buildings and Other Structures*, Revision of A58.1-1955, American National Standards Institute Inc., New York, NY.

CALC-15-009, *Natural Phenomena Hazard Assessment of Waste Handling Building*, September 2015, Revision 0, Nuclear Waste Partnership LLC, Carlsbad, NM.

Cornell, C.A., and H.A. Merz, 1975, "A Seismic Risk Analysis of Boston," *Journal of the Structural Division, American Society of Civil Engineering*, October 1975, Vol. 101, No. 10, pp. 2027–2043.

DGAF 140, 1946, *Relations between Gusts and Average Wind Speeds for Housing Load Determination*, Daniel Guggenheim, Airship Institute, Cleveland, OH.

DOE/CAO 1996-2184, *Title 40 CFR 191 Compliance Certification Application for the Waste Isolation Pilot Plant*, U.S. Department of Energy, Carlsbad Area Office, Carlsbad, NM.

DOE/EIS-0026, *Final Environmental Impact Statement, Waste Isolation Pilot Plant*, U.S. Department of Energy, Carlsbad Field Office, Carlsbad, NM.

DOE Guide 420.1-1, 2000, *Nonreactor Nuclear Safety Design Criteria and Explosives Safety Criteria Guide*, March 28, 2000, U.S. Department of Energy, Washington, DC.

DOE Order 420.1, *Facility Safety*, applicable revision, U.S. Department of Energy, Washington, DC.

DOE Order 430.1, *Life Cycle Asset Management*, applicable revision, U.S. Department of Energy, Washington, DC.

DOE Order 436.1, 2011, *Departmental Sustainability*, May 2, 2011, U.S. Department of Energy, Washington, DC.

DOE Order 6430, 1981, *General Design Criteria Manual for Department of Energy Facilities*, Draft (superseded), June 10, 1981, U.S. Department of Energy, Washington, DC.

DOE-STD-1020-2002, *Natural Phenomena Hazards Design and Evaluation Criteria for Department of Energy Facilities*. U.S. Department of Energy, Washington, DC.

DOE-STD-1020-2012, 2012, *Natural Phenomena Hazards Analysis and Design Criteria for DOE Facilities*, October 3, 2012, U.S. Department of Energy, Washington, DC.

DOE-STD-3014-1996, *Accident Analysis for Aircraft Crash into Hazardous Facilities*, Reaffirmed May 2006, U.S. Department of Energy, Washington, DC.

DOE/WIPP 93-004, *Waste Isolation Pilot Plant Land Management Plan*, U.S. Department of Energy, Carlsbad Field Office, Carlsbad, NM.

DOE/WIPP 11-2225, 2011, *Waste Isolation Pilot Plant Annual Site Environmental Report for 2010*, U.S. Department of Energy, Carlsbad Field Office, Carlsbad, NM.

DOE/WIPP 14-3532, 2014, *Waste Isolation Pilot Plant Annual Site Environmental Report for 2013*, U.S. Department of Energy, Carlsbad Field Office, Carlsbad, NM.

DOE and BLM, 1994, "Memorandum of Understanding between the U.S. Department of Energy and the U.S. Department of the Interior, Bureau of Land Management," July 19, 1994, U.S. Department of Energy, Washington, DC.

Fujita, T.T., 1978, *A Site-Specific Study of Wind and Tornado Probabilities at the WIPP Site in Southeast New Mexico*, SMRP Research Paper No. 155, Satellite & Mesometeorology Research Project, Department of the Geophysical Sciences, University of Chicago, Chicago, IL.

HHFA, 1956, *Snow Load Studies*, Housing and Home Finance Agency, Office of the Administrative Division of Housing Research, Washington, DC.

Hull, B.B., 1958, *Hail Size and Distribution*, Accession Number AD0157400, February 1958, U.S. Army, Quartermaster Research and Engineering Command, Natick, MA.

Markee, E.H., Jr., J.G. Beckerly, and K.E. Sanders, 1974, *Technical Basis for Interim Regional Tornado Criteria*, WASH-1300, May 1974, U.S. Atomic Energy Commission, Office of Regulation, Washington, DC.

MRP No. 155, Mesometeorology Research Project, Fujita, T.T., *A Site-Specific Study of Wind and Tornado Probabilities at the WIPP Site in Southeast New Mexico*. 43 pp. February 1978, Lubbock, TX.

NOAA, 1974, *Climates of the States*, Vol. 2, "Western States," Roswell, New Mexico, U.S. National Oceanic and Atmospheric Administration, Water Information Center, Port Washington, NY.

NOAA, 1976, *Climatological Data National Summary*, U.S. Department of Commerce, National Oceanic and Atmospheric Administration, Silver Spring, MD.

NRC, 1973, *Design Response Spectra for Seismic Design of Nuclear Power Plants*, Regulatory Guide 1.60, Revision 1, December 1973, U.S. Nuclear Regulatory Commission, Washington, DC.

NRC, 1974, *Guidance on the License Application, Siting, Design, and Plant Protection for an Independent Spent Fuel Storage Installation*, Regulatory Guide 3.24, December 1974, U.S. Nuclear Regulatory Commission, Washington, DC.

Pautz, M.E., 1969, *Severe Local Storm Occurrence, 1955–1967*, Environmental Sciences and Services Administration Technical Memorandum WBTM FCST12, U.S. Department of Commerce, Washington, DC.

Pratt, H.R., W.A. Hulstrulid, and D.E. Stephenson, 1978, *Earthquake Damage to Underground Facilities*, DP-1513, November 1978, Savannah River Laboratory and Terra Tek, Published by Savannah River Laboratory and U. S. Department of Energy, Aiken, SC.

Public Law 94-580, *Solid Waste Disposal Act of 1976*, 42 USC 7001, et seq.

Public Law 96-164, 1979, *U.S. Department of Energy National Security and Military Applications of Nuclear Energy Authorization Act of 1980*, et seq., December 29, 1979.

Public Law 102-579, 1992 (1996), *Waste Isolation Pilot Plant Land Withdrawal Act of 1992*, et seq., October 30, 1992 (as amended by Public Law 104-201, September 23, 1996).

SAND 78-1596, 1978, *Geological Characterization Report, Waste Isolation Pilot Plant Site, Southeastern New Mexico*, December 1978, Sandia National Laboratories, Albuquerque, NM.

Sanford, A., S. Sanford, F. Caravella, L. Merritt, J. Sheldon, and R. Ward, 1978, *Seismic Studies of the Los Medanos Area in Southeastern New Mexico*, New Mexico Institute of Mining and Technology, Socorro, NM.

Sanford, A., S. Sanford, T. Wallace, J. Sheldon, R. Ward, S. Johansen, and L. Merritt, 1980, *Seismicity in the Area of the Waste Isolation Pilot Project (WIPP)*, SAND 80-7096, January 1980, Sandia National Laboratories, Albuquerque, NM.

Sanford, A.R., and T.R. Toppozada, 1974, *Seismicity of Proposed Radioactive Waste Disposal Site in Southeastern New Mexico*, Circular 143, New Mexico Bureau of Mines and Mineral Resources, Socorro, NM.

SDD CF00-GC00, *Plant Buildings, Facilities, and Miscellaneous Equipment System Design Description (SDD)* (current revision), Nuclear Waste Partnership LLC, Carlsbad, NM.

Sutton, O.G., 1953, *Micrometeorology*, McGraw-Hill Book Co., Inc., New York, NY, p. 238.

Thom, H.C.S., 1963, "Tornado Probabilities," *Monthly Weather Review*, October 1963, Vol. 91, Issue 10, pp. 730–736.

USDA, 2008, *New Mexico Agricultural Statistics*, U.S. Department of Agriculture, New Mexico Agricultural Statistics Service, Las Cruces, NM.

USDOC, 1956, *Seasonal Variations of the Probable Maximum Precipitation East of the 105th Meridian for Areas from 10 to 1,000 Square Miles and Durations of 6, 12, 24 and 48 Hours*, Weather Bureau Hydrometeorological Report No. 33, April 1956, U.S. Department of Commerce, Washington, DC.

USDOC, 1960, *Tornado Occurrences in the United States*, Weather Bureau Technical Paper No. 20, July 1960, U.S. Department of Commerce, Washington, DC.

USDOC, 1963, *Maximum Recorded United States Point Rainfall for 5 Minutes to 24 Hours at 207 First Order Stations*, Weather Bureau Technical Paper No. 2, U.S. Department of Commerce, Washington, DC.

USDOC, 1968, *Weather Atlas of the United States* (originally titled *Climatic Atlas of the United States*) (1975 reprint of the 1968 Edition reprinted by the U.S. Environmental Data Service and Gale Research Co., Detroit, MI), U.S. Department of Commerce, Washington, DC.

USDOC, 2010, *Census of Population and Housing*, Census Bureau, U.S. Department of Commerce, Washington, DC.

WCEE, 1966, "The Major Influences on Seismic Risk," *Proceedings of the Third World Conference on Earthquake Engineering*, Vol. A-I, Santiago, Chile.

WIPP-002, *Documented Safety Analysis Unit Consequence Analysis*, Revision 2, November 2011, Washington TRU Solutions, LLC, Carlsbad, NM.

WIPP-008, 2008, *Estimate of Aircraft Crash Frequency at the Waste Isolation Pilot Plant*, Revision 1, September 2008, Washington TRU Solutions, LLC, Carlsbad, NM.

Wood, H.O., and F. Neumann, 1931, "Modified Mercalli Intensity Scale of 1931," *Bulletin of the Seismology Society of America*, Vol. 21, pp. 277–283.

WP 02-PC.02, 2008, *Delaware Basin Drilling Surveillance Plan*, Revision 6, Effective December 3, 2014, Nuclear Waste Partnership, LLC, Carlsbad, NM.

This page intentionally left blank

Table of Contents

2.0 FACILITY DESCRIPTION 2-1
2.1 Introduction 2-1
2.1.1 The Two Incidents at WIPP in February 2014 2-1
2.2 Requirements 2-2
2.3 Facility Overview 2-2
2.3.1 Facility Design 2-2
2.3.2 Facility Operations 2-3
2.4 Facility Structure 2-4
2.4.1 Waste Handling Building 2-4
2.4.1.1 Contact-Handled Waste Handling Facilities 2-5
2.4.1.2 Remote-Handled Waste Handling Facilities 2-7
2.4.1.3 Waste Hoist Tower 2-11
2.4.1.4 Waste Handling Building Mechanical Equipment Room 2-11
2.4.2 Building 412 2-11
2.4.3 Exhaust Filter Building 2-12
2.4.4 WIPP Shafts and Underground Facilities 2-12
2.4.4.1 WIPP Shafts 2-12
2.4.4.2 Underground Facilities 2-15
2.4.4.3 Ground Control Program 2-18
2.4.4.4 Disposal Facilities 2-20
2.4.4.5 Magnesium Oxide Backfill 2-21
2.4.4.6 Panel Closure System 2-21
2.4.4.7 Geotechnical Monitoring Program 2-22
2.4.5 Support Building 2-23
2.5 Remote-Handled Waste Handling Equipment and Process Description 2-43
2.5.1 Remote-Handled Waste Shipping Packages 2-43
2.5.1.1 Remote-Handled Transuranic 72-B Shipping Package 2-43
2.5.1.2 10-160B Shipping Package 2-44
2.5.2 Remote-Handled Waste Containers and Canisters 2-45
2.5.2.1 Remote-Handled Waste Canister 2-45
2.5.2.2 Neutron-shielded Waste Canisters 2-45
2.5.3 Remote-Handled Waste Casks 2-45
2.5.3.1 Shielded Insert 2-46
2.5.3.2 Facility Cask 2-46
2.5.3.3 Light-Weight Facility Cask 2-46
2.5.4 Remote-Handled Waste Handling Equipment 2-47
2.5.4.1 Remote-Handled Bay Equipment 2-47
2.5.4.2 Cask Unloading Room Equipment 2-49
2.5.4.3 Upper Hot Cell Equipment 2-50
2.5.4.4 Transfer Cell Equipment 2-54
2.5.4.5 Facility Cask Loading Room Equipment 2-56
2.5.4.6 Underground RH Waste Handling Equipment 2-58

2.5.5 Remote-Handled Waste Handling Process 2-65
2.5.5.1 Remote-Handled Waste Receiving 2-65
2.5.5.2 Remote-Handled Transuranic 72-B Remote-Handled Waste Handling Process 2-65
2.5.5.3 10-160B RH Waste Handling Process 2-67
2.5.5.4 Waste Shaft Collar Room 2-69
2.5.5.5 Waste Shaft Station 2-69
2.5.5.6 Underground Remote-Handled Waste Disposal Area 2-70
2.6 Contact-Handled Waste Handling Equipment and Process Description 2-100
2.6.1 Contact-Handled Waste Shipping Packages 2-100
2.6.1.1 TRUPACT-II 2-100
2.6.1.2 HalfPACT 2-101
2.6.1.3 TRUPACT-III 2-101
2.6.2 Contact-Handled Waste Containers 2-102
2.6.2.1 55-gallon Drums 2-102
2.6.2.2 85-gallon Drums 2-102
2.6.2.3 100-gallon Drums 2-102
2.6.2.4 Standard Waste Box 2-102
2.6.2.5 10-Drum Overpack 2-103
2.6.2.6 Standard Pipe Overpack 2-103
2.6.2.7 S100 Pipe Overpack 2-103
2.6.2.8 S200 Pipe Overpack 2-104
2.6.2.9 S300 Pipe Overpack 2-104
2.6.2.10 Standard Large Box 2 2-104
2.6.2.11 Shielded Containers 2-104
2.6.2.12 Criticality Control Overpack 2-105
2.6.3 Contact-Handled Waste Handling Equipment 2-105
2.6.3.1 Contact-Handled Bay/Room 108 2-105
2.6.3.2 Underground 2-113
2.6.4 Contact-Handled Waste Handling Process 2-115
2.6.4.1 Contact-Handled Waste Receiving 2-115
2.6.4.2 TRUPACT-II or HalfPACT Processing 2-115
2.6.4.3 TRUPACT-III Processing 2-116
2.6.4.4 Conveyance Loading Room 2-117
2.6.4.5 Waste Shaft Collar Room 2-117
2.6.4.6 Waste Shaft Station 2-117
2.6.4.7 Underground Contact-Handled Waste Disposal Area 2-118
2.6.5 Process Interruptions 2-119
2.6.5.1 Routine Interruptions 2-119
2.6.5.2 Emergency/Abnormal Interruptions 2-119
2.7 Confinement Systems 2-151
2.7.1 Waste Handling Building 2-151
2.7.2 Underground 2-151
2.7.3 Ventilation Systems 2-152

2.7.3.1 Surface Ventilation Systems 2-152
2.7.3.2 Waste Handling Building Contact-Handled and Remote-Handled Waste Handling Area Ventilation Systems 2-153
2.7.3.3 Waste Handling Building Mechanical Equipment Room Ventilation System 2-154
2.7.3.4 Waste Handling Building Waste Shaft/Waste Hoist Tower Ventilation System 2-154
2.7.3.5 Battery Exhaust System 2-154
2.7.3.6 Exhaust Filter Building Ventilation System 2-155
2.7.3.7 Central Monitoring Room Ventilation System 2-155
2.7.3.8 Underground Ventilation System 2-155
2.8 Safety Support Systems 2-170
2.8.1 Radiation Monitoring System 2-170
2.8.2 Fire Protection System 2-171
2.8.2.1 Fire Water Supply and Distribution System 2-172
2.8.2.2 Fire Detection and Alarm System 2-173
2.8.2.3 Fire Suppression System 2-173
2.8.2.4 Radio Fire Alarm Reporter System 2-174
2.8.2.5 Fire Protection System Design, Installation, Testing, and Maintenance 2-174
2.9 Utility Distribution Systems 2-175
2.9.1 Electrical System 2-175
2.9.1.1 Normal Power Source 2-176
2.9.1.2 Backup Power Source 2-176
2.9.1.3 Uninterruptible Power Supply 2-177
2.9.1.4 Lightning Protection and Grounding 2-178
2.9.1.5 Safety Considerations and Controls 2-178
2.9.2 Compressed Air System 2-178
2.9.3 Plant Monitoring and Communications Systems 2-178
2.9.3.1 Central Monitoring System 2-179
2.9.3.2 Plant Communications 2-179
2.10 Auxiliary Systems and Support Facilities 2-180
2.10.1 Water Distribution System 2-180
2.10.2 Sewage Treatment System 2-180
2.10.3 Meteorological Tower 2-180
2.10.4 Central Monitoring Room 2-181
2.11 References 2-181

List of Tables

Table 2.5-1. Horizontal Emplacement and Retrieval Equipment....2-59
Table 2.5-2. Horizontal Emplacement Machine....2-63
Table 2.6-1. Payload Containers Maximums....2-101
Table 2.6-2. Pipe Component and Pipe Overpack Weights....2-103
Table 2.9-1. Diesel Generator Loadings....2-177
Table 2.9-2. Uninterruptible Power Supply Loads....2-177

List of Figures

Figure 2.4-1. WIPP Surface Structures....2-24
Figure 2.4-2. Underground Facilities....2-26
Figure 2.4-3. Spatial View of the WIPP Underground Facilities....2-27
Figure 2.4-4. Waste Handling Building Plan (Ground Floor)....2-28
Figure 2.4-5. Waste Handling Building Plan (Upper Floor)....2-29
Figure 2.4-6. Waste Handling Building (Sections)....2-30
Figure 2.4-7. Waste Handling Building South Wall Vehicle Barrier Configuration....2-31
Figure 2.4-8. Contact-Handled Waste Transport Routes in the Waste Handling Building....2-32
Figure 2.4-9. Pictorial View of the Remote-Handled Surface Facilities and Flow of 10-160B Process....2-33
Figure 2.4-10. Details of Upper Hot Cell....2-34
Figure 2.4-11. Details of Upper Hot Cell Complex at Cross Section D-D....2-35
Figure 2.4-12. Details of Upper Hot Cell Complex at Cross Section E-E....2-36
Figure 2.4-13. Exhaust Filter Building....2-37
Figure 2.4-14. Waste Shaft, Hoist, and Conveyance Arrangement....2-38
Figure 2.4-15. Underground Layout and Ventilation Flow....2-39
Figure 2.4-16. Typical Waste Disposal Configuration....2-40
Figure 2.4-17. Panel Closure System....2-41
Figure 2.4-18. Substantial Barrier and Isolation Bulkhead....2-42
Figure 2.5-1. Remote-Handled Transuranic 72-B Shipping Package on Trailer....2-72
Figure 2.5-2. Remote-Handled Transuranic 72-B Remote-Handled Waste Handling Process....2-73
Figure 2.5-3. 10-160B Remote-Handled Waste Handling Process....2-74
Figure 2.5-4. Remote-Handled Transuranic 72-B Shipping Container....2-75
Figure 2.5-5. Remote-Handled Waste Canister....2-76
Figure 2.5-6. Neutron-shielded Canister NS15....2-77
Figure 2.5-7. Neutron-shielded Canister NS30....2-78
Figure 2.5-8. Facility Cask (a Remote-Handled Waste Cask)....2-79
Figure 2.5-9. Light Weight Facility Cask (a Remote-Handled Waste Cask)....2-80
Figure 2.5-10. 140/25-ton Crane Cask-lifting Yoke....2-81
Figure 2.5-11. Remote-Handled Transuranic 72-B Shipping Package on Transfer Car....2-82

Figure 2.5-12. Facility Grapple 2-83
Figure 2.5-13. 10-160B Drum Carriage Lifting Fixture 2-84
Figure 2.5-14. Facility Cask Rotating Device 2-85
Figure 2.5-15. Upper Hot Cell Transfer Drawer 2-86
Figure 2.5-16. Transfer Cell Shuttle Car 2-87
Figure 2.5-17. Facility Cask Transfer Car 2-88
Figure 2.5-18. 6.25-ton Facility Cask Loading Room Grapple Hoist 2-89
Figure 2.5-19. Telescoping Port Shield 2-90
Figure 2.5-20. Bell Shield and Block 2-91
Figure 2.5-21. Waste Transfer Machine Assembly Installed on the Alignment Fixture 2-92
Figure 2.5-22. Remote-Handled Waste Emplacement Configuration 2-93
Figure 2.5-23. Facility Cask Installed on the Waste Transfer Machine Assembly 2-94
Figure 2.5-24. Horizontal Emplacement Machine with Light Weight Facility Cask 2-95
Figure 2.5-25. Horizontal Emplacement Machine with Shield Plug 2-96
Figure 2.5-26. Remote-Handled Waste Handling Facility Cask Unloading from Conveyance 2-97
Figure 2.5-27. Remote-Handled Waste Canister Emplacement 2-98
Figure 2.5-28. Installing Shield Plug 2-99
Figure 2.6-1. Truck, TRUPACT-IIs, and Trailer 2-120
Figure 2.6-2. Contact-Handled Waste Handling Process 2-121
Figure 2.6-3. TRUPACT-II Shipping Package 2-122
Figure 2.6-4. HalfPACT Shipping Package 2-123
Figure 2.6-5. TRUPACT-III Shipping Package 2-124
Figure 2.6-6. 55-gallon Drum 2-125
Figure 2.6-7. 85-gallon Drum 2-126
Figure 2.6-8. 100-gallon Drum 2-127
Figure 2.6-9. Standard Waste Box 2-128
Figure 2.6-10. 10-Drum Overpack 2-129
Figure 2.6-11. Standard Pipe Overpack 2-130
Figure 2.6-12. Standard Pipe Overpack Components 2-131
Figure 2.6-13. S100 Pipe Overpack 2-132
Figure 2.6-14. S300 Pipe Overpack Shield Insert 2-133
Figure 2.6-15. Standard Large Box 2 2-134
Figure 2.6-15a. Shielded Container 2-135
Figure 2.6-15b. Criticality Control Overpack 2-136
Figure 2.6-16. Typical Overhead Crane 2-137
Figure 2.6-17. Adjustable Center-of-Gravity Lifting Fixture 2-138
Figure 2.6-18. TRUDOCK Vent Hood System 2-139
Figure 2.6-19. TRUDOCK Vacuum System 2-140
Figure 2.6-20. Standard Waste Box Lifting Fixture Adapter 2-141
Figure 2.6-21. 10-Drum Overpack Lifting Fixture Adapter 2-142
Figure 2.6-22. Standard Waste Box Forklift Fixture 2-143

Figure 2.6-23. Facility Pallet 2-143
Figure 2.6-24. Bolting Station 2-144
Figure 2.6-25. Payload Transfer Station 2-145
Figure 2.6-26. Facility Pallet on Stand and Facility Transfer Vehicle 2-146
Figure 2.6-27. Facility Pallet on Conveyance Loading Car 2-147
Figure 2.6-28. Push/Pull Attachment Requiring Forklift Tine Removal 2-148
Figure 2.6-29. Push/Pull Attachment Installed on Forklift Tines 2-149
Figure 2.6-30. Arrangement of Typical Waste Stack (Magnesium Oxide not shown) 2-150
Figure 2.7-1. Waste Handling Building and TRUPACT Maintenance Facility 2-158
Figure 2.7-2. Waste Handling Building Contact-Handled HVAC Flow Diagram 2-159
Figure 2.7-3. Waste Handling Building Remote-Handled HVAC Flow Diagram 2-160
Figure 2.7-4. Waste Shaft / Waste Hoist Tower HVAC Flow Diagram 2-162
Figure 2.7-5. Exhaust Filter Building Heating, Ventilation, and Air Conditioning Flow Diagram 2-163
Figure 2.7-6. Support Building Central Monitoring Room HVAC Flow Diagram 2-164
Figure 2.7-7. Underground Ventilation Airflow Diagram 2-165
Figure 2.7-8. Main Fan and Exhaust Filter System Schematic 2-166
Figure 2.7-9. Typical Bulkhead Design and Components 2-167
Figure 2.7-10. Underground Ventilation Airflow with Supplemental Ventilation System during Construction Mode 2-168
Figure 2.7-11. Underground Ventilation Airflow with Supplemental Ventilation System during Waste Handling Mode 2-169

2.0 FACILITY DESCRIPTION

2.1 INTRODUCTION

The purpose of this chapter is to provide descriptions of the WIPP facility and processes to support assumptions used in the hazard and accident analyses. This chapter discusses design and safety criteria for Structures, Systems, and Components (SSCs) that protect the public, workers, and the environment from hazards posed by the WIPP Transuranic (TRU) Mixed Waste disposal operations. TRU Waste with a radiation level of less than 200 millirem (mrem) per hour at the surface of the Waste Container is Contact-Handled (CH) Waste. Remote-Handled (RH) TRU Waste has a radiation level of equal to or greater than 200 mrem per hour, but less than 1,000 rem per hour. This chapter also describes the SSCs that support CH and RH Waste Handling processes.

This chapter is organized as follows:

- Requirements (Section 2.2).
- Facility Overview (Section 2.3).
- Facility Structure (Section 2.4).
- Remote-Handled Waste Handling Equipment and Process Description (Section 2.5).
- Contact-Handled Waste Handling Equipment and Process Description (Section 2.6).
- Confinement Systems (Section 2.7).
- Safety Support Systems (Section 2.8).
- Utility Distribution Systems (Section 2.9).
- Auxiliary Systems and Support Facilities (Section 2.10).
- References (Section 2.11).

2.1.1 The Two Incidents at WIPP in February 2014

Operations were suspended at WIPP on February 5, 2014, following a fire involving an Underground (UG) vehicle. Nine days later, on February 14, 2014, a radiological event occurred in the UG, contaminating a portion of the mine primarily along the exhaust ventilation path from the location of the incident, releasing a small amount of contamination into the environment.

Potentially Inadequate Safety Analyses (PISAs) were declared for both the UG vehicle fire and the radiological event. Unreviewed Safety Question (USQ) determinations associated with the PISAs were positive and, in accordance with Title 10 of the *Code of Federal Regulations* (CFR) Section 830.203, “Unreviewed Safety Question Process,” and U.S. Department of Energy (DOE) Guide 424.1-1B, *Implementation Guide for Use in Addressing Unreviewed Safety Question Requirements*, a number of Evaluations of the Safety of the Situation were submitted to DOE over a period of time that reflected the current understanding of the situation and its impact on the safety basis along with appropriate controls. Implementation of this revision to the Documented Safety Analysis (DSA) supersedes all previous Evaluations of the Safety of the Situation.

The WIPP management and operations contractor, Nuclear Waste Partnership LLC (NWP), has finalized corrective action plans for both the UG fire and the radiological release. Major changes include operation

in Filtration Mode as normal and enhancements to fire protection, emergency management, and other facility programs. The details of the corrective action plans are outlined in the *Waste Isolation Pilot Plant Recovery Plan*. Decontamination activities, including encapsulation, have taken place to support continued UG operations.

2.2 REQUIREMENTS

The WIPP surface facilities were designed and constructed according to the *General Design Criteria Manual for Department of Energy Facilities* (DOE Order 6430), draft, dated June 10, 1981, and codes and standards applicable at the time of construction. Facility design modifications initiated between the issuance of DOE Order 6430 and DOE Guide 420.1-1, *Nonreactor Nuclear Safety Design Criteria and Explosives Safety Criteria Guide*, were designed in accordance with DOE Order 6430 and the codes and standards applicable at the time of modification.

New designs or modifications must meet the requirements of *Facility Safety* (DOE Order 420.1C) and *Real Property Asset Management* (DOE Order 430.1B) and the codes and standards in *Nonreactor Nuclear Safety Design Criteria for use with DOE O 420.1C, Facility Safety* (DOE Guide 420.1-1A). Codes and standards from DOE Guide 420.1-1A are applicable to the WIPP safety SSCs. In addition, the design and construction of the UG structures, mining equipment, ventilation, and facilities including the shafts, hoists, and conveyances are governed, where applicable, by 30 CFR 57, "Safety and Health Standards – Underground Metal and Nonmetal Mines" in accordance with the 2014 Memorandum of Understanding between the DOE and the Mine Safety and Health Administration (MSHA).

SSCs for the original WIPP design were classified as Design Class I, II, and III in the *General Plant Design Description (GPDD) System Design Description (SDD)* and individual System Design Descriptions (SDDs). Criteria for the selection of Design Class I, II, and III SSCs are identified for historical purposes in the SDD GPDD System. The WIPP has replaced Design Class classifications with functional classifications consistent with DOE Guide 420.1-1A. The WIPP safety-related SSC functional classifications are as follows:

- **Safety Class (SC)** SSCs, including portions of process systems, whose preventive or mitigative function is necessary to limit radioactive hazardous material (HAZMAT) exposure to the public, as determined from safety analysis.
- **Safety Significant (SS)** SSCs that are not designated as SC SSCs, but whose preventive or mitigative function is a major contributor to defense-in-depth and/or worker safety as determined from safety analysis. Quality requirements are applied in accordance with *Nuclear Waste Partnership LLC Quality Assurance Program Description* (WP 13-1) and *Graded Approach to Application of QA Controls* (WP 09-CN3005).

2.3 FACILITY OVERVIEW

2.3.1 Facility Design

The WIPP site is located in Eddy County in southeastern New Mexico, 26 miles east of Carlsbad. The land area set aside for the WIPP site is 10,240 acres. The WIPP site is located in an area of low population density as discussed in Chapter 1.0, "Site Characteristics," Section 1.3.2. The area surrounding the facility is used primarily for grazing and the development of potash, oil, and gas resources. As the result of the *Waste Isolation Pilot Plant Land Withdrawal Act of 1992* (LWA) (Public Law 102-579 et seq.), no mineral resource development is allowed within the WIPP site boundary, with the exception of existing leases.

The WIPP facility is designed to receive and handle 500,000 cubic feet (ft^3) per year of CH Waste and 10,000 ft^3 per year of RH Waste. CH and RH Waste is disposed of in the UG disposal area located approximately 2,150 feet beneath the surface in a deep-bedded salt formation. Waste is transferred from the surface to the UG through the Waste Shaft using a mine hoist. The disposal phase is planned to last for 35 years per the *National TRU Waste Management Plan* (DOE/NTP 96-1204) and *Waste Isolation Pilot Plant Disposal Phase Final Supplemental Environmental Impact Statement* (DOE/EIS-0026-S-2).

The WIPP site is divided into surface structures, shafts, and UG structures as shown in Figure 2.4-1, Figure 2.4-2, and Figure 2.4-3. The WIPP surface structures accommodate the personnel, equipment, and support services required for the receipt, preparation, and transfer of waste from the surface to the UG. The surface structures associated with Waste Handling or support of site operations are located in an area within a perimeter security fence. This area is referred to as the Property Protection Area (PPA). There are additional structures outside the PPA, but within the 10,240 acres, including the site Meteorological Monitoring Tower, sewage stabilization ponds, equipment laydown areas, a communication tower, two mined rock (salt) piles, evaporation ponds for managing site runoff, a utility switchyard, and groundwater monitoring wells.

The primary surface Waste Handling operations at WIPP are performed in the Waste Handling Building (WHB), which is divided into the CH and RH Waste processing areas and the Shaft Access Area. The CH Waste Handling areas consists of the CH Bay, Room 108, Airlock 107, and the Shielded Storage Room. Airlock 107 separates the CH Bay and Room 108. The RH Waste Handling area includes the RH Bay and the Hot Cell Complex. The Hot Cell Complex includes the Cask Unloading Room (CUR), the Transfer Cell, the Lower Hot Cell, and the Upper Hot Cell. CH and RH Waste Handling occur in the Shaft Access Area which consists of the Facility Cask Loading Room (FCLR), the Conveyance Loading Room (CLR), and the Waste Shaft Collar Room. The Waste Hoist Tower, located between the CH and RH portions of the WHB, includes the Waste Shaft Collar Room, the Waste Shaft Collar, the Waste Hoist system, and the Waste Hoist Master Control Station.

Four shafts extend from the surface to the UG horizon: the Waste Handling Shaft, the Salt Handling Shaft, the Exhaust Shaft, and the Air Intake Shaft, as shown in Figure 2.4-3.

The WIPP UG facilities include the waste disposal area, construction area, the experimental area (north of the shafts), and the shaft pillar area (the Waste Shaft Station, maintenance facilities, etc.). UG ventilation is divided into four separate flow paths supporting the waste disposal area, mining construction area, north area, and the Waste Shaft Station Area.

A Disposal Panel consists of seven Disposal Rooms with an intake and an exhaust drift. Each room within a panel is approximately 33 feet wide by 13 feet high by 300 feet long. A Disposal Room is separated from the adjacent room(s) by pillars of salt approximately 100 feet wide and 300 feet long. The panel intake drift is approximately 20 feet wide by 13 feet high, while the exhaust drift is approximately 14 feet wide by 12 feet high. Once panels are operationally filled, panel closures are installed in the first 200 feet of both panel entries.

2.3.2 Facility Operations

The principal operations at the WIPP involve the receipt and disposal of TRU Waste. CH and RH Waste Containers are transported to the WIPP site in Type B shipping packages certified by the U.S. Nuclear Regulatory Commission (NRC). The shipping packages are transported on trailers designed for each specific type of shipping package, and transported by over-the-road tractors. RH Waste is shipped in RH-TRU 72-B, while CH Waste is shipped in a TRU Package Transporter Model II (TRUPACT-II), a

Half Package Transporter (HalfPACT), or a TRU Package Transporter Model III (TRUPACT-III) shipping package. RH Waste, in shielded containers (less than or equal to 200 mrem per hour on contact), will be managed, handled, and emplaced using the same process as is used for the CH Waste, and will be shipped in HalfPACTs. Therefore, from a WIPP facility safety perspective, shielded containers are included in the CH TRU Waste process. The Waste Handling process begins when the tractor/trailer loaded with a shipping package(s) arrives at the WIPP security gate. At the gate, the shipping manifest is verified. The loaded trailer is then staged in the WHB Parking Area Unit to the south of the WHB. Radiological surveys are completed before moving the shipping packages into the WHB. The *Waste Isolation Pilot Plant Hazardous Waste Facility Permit* NM4890139088-TSDF (HWFP) administratively limits the amount of waste that can be stored in the WHB Parking Area Unit and in the WHB. The shipping packages are moved into the WHB where their contents are prepared for transport to the UG for disposal. If generator site waste is taken outside the WHB, other than to the UG, it will only be moved in closed Type-B packages. The WHB Parking Area Unit is the asphalt and concrete surface extending from north of the rail sidings to the WHB, within the waste storage areas as depicted in Figure 2.4-1.

Generator sites ensure TRU Waste is characterized in compliance with the requirements of *Transuranic Waste Acceptance Criteria for the Waste Isolation Pilot Plant* (WIPP WAC) (DOE/WIPP 02-3122), prior to placing the waste into shipping containers and shipping to WIPP. The Waste Container must be of a type authorized by the WIPP WAC for shipment to WIPP. Authorized CH Waste Containers are U.S. Department of Transportation (DOT) Type 7A and include 55-gallon drums, 85-gallon drums, 100-gallon drums, shielded containers, Standard Waste Boxes (SWBs), 10-Drum Overpacks (TDOPs), and Standard Large Box 2s (SLB2s). Authorized RH Waste Containers are DOT Type 7A RH Waste Canisters RH-TRU 72-B, NS15, NS30, or 55-gallon drums. RH Waste Containers are discussed in Section 2.5.2 and CH Waste Containers are discussed in Section 2.6.2.

Waste Containers from the generator sites are certified free of surface contamination above 10 CFR 835 Appendix D, “Surface Contamination Values” limits upon shipment. Waste Containers are visually inspected for physical damage (severe rusting, apparent structural defects, signs of pressurization, etc.) and leakage to ensure they are in good condition prior to storage. Waste Containers are also checked for external surface contamination. WIPP may initiate local decontamination on containers in good condition and free of leakage. External surface contamination identified above 10 CFR 835 Appendix D limits will be controlled in accordance with established operational and radiological control procedures.

2.4 FACILITY STRUCTURE

2.4.1 Waste Handling Building

TRU Waste is prepared for disposal in the WHB and then transferred to the UG via the Waste Shaft. The general layout of the WHB is shown in Figure 2.4-4 and Figure 2.4-5, with sectional views shown in Figure 2.4-6. The WHB is surrounded by pavement or gravel on three sides. The west wall of the CH Bay is the east wall of Building 412, the TRUPACT Maintenance Facility (TMF). The south wall of the WHB is separated from the PPA fence by the WHB Parking Area, railroad tracks, and gravel, a distance of approximately 200 feet. The WHB is approximately 9,500 feet from the WIPP site boundary, the point where the Evaluation Guideline is applied.

The WHB, which includes the Waste Hoist Tower, is a steel-frame structure with insulated steel siding. Portions of the WHB, such as the Hot Cell Complex and Shielded Storage Room, are constructed of thick concrete for shielding. The WHB is constructed as a Type II construction per *Standard on Types of Building Construction* (NFPA 220), and serves as a confinement barrier to control the potential for release of radioactive and/or non-radioactive hazardous material. The WHB is designed and constructed to

withstand the Design Basis Earthquake (DBE) with 0.1 g peak acceleration and a 1,000-year return interval, and the Design Basis Tornado (DBT) with 183 miles per hour (mph) winds, a translational velocity of 41 mph, a maximum rotational velocity radius of 325 feet, a pressure drop of 0.5 pounds per square inch (psi) and a pressure drop rate of 0.09 psi per second. Tornado-rated doors are installed at the primary confinement wall interface. The roof of the WHB is designed to withstand 27 pounds per square foot (lb/ft^2) of snow load. The 100-year-recurrence maximum snowpack for the WIPP region is 10 lb/ft^2. The south wall of the WHB is additionally protected by concrete barriers between the airlock 100 and the TMF, as depicted in Figure 2.4-7. Sand-filled plastic barriers are placed between the airlocks.

The TMF is designed and constructed to withstand the DBE and DBT and its roof has a design snow load of 27 lb/ft^2. The main lateral-force-resisting structural members of the Support Building, located approximately 12 feet north of the CH portion of the WHB, are designed to withstand the DBE and DBT to prevent the Support Building from collapsing on the WHB.

The construction of the WHB north wall includes masonry construction. The design parameters for the WHB are described in the *Plant Buildings, Facilities, and Miscellaneous Equipment System Design Description* (SDD CF00-GC00).

Waste Handling areas in the WHB that are subject to potential contamination are provided with coatings that are easy to decontaminate.

2.4.1.1 Contact-Handled Waste Handling Facilities

2.4.1.1.1 Contact-Handled Bay Entrance Airlocks

CH shipping packages are transferred into the CH Bay from the WHB Parking Area Unit through three entrance airlocks on the south wall of the CH Bay. Each airlock can accommodate a battery-powered 13-ton forklift or Yard Transfer Vehicle (YTV) transporting a CH shipping package. The doors at each end of an entrance airlock are interlocked such that only one door can be opened at a time. Preventing both doors from being opened at the same time allows the CH portion of the WHB ventilation system to maintain the CH Bay at a lower pressure than the ambient atmospheric. Each door is opened and closed by push buttons located near the door they control.

2.4.1.1.2 Contact-Handled Bay

The CH Bay provides space for removal of CH Waste assemblies from shipping packages (TRUPACT-IIs and HalfPACTs) and storage of CH Waste assemblies on facility pallets. The CH Bay is equipped with two TRUPACT-II Unloading Docks (TRUDOCKs), with each TRUDOCK having two 6-ton overhead cranes. Figure 2.4-8 shows the TRUDOCK arrangement. A TRUDOCK has two workstations; each workstation is equipped with a 6-ton crane and can process one TRUPACT-II or HalfPACT at a time. The TRUDOCK 6-ton cranes are used for disassembling TRUPACT-IIs or HalfPACTs, removing the waste assemblies from the shipping containers, placing the waste assemblies on facility pallets, and reassembling the shipping containers. The CH Waste Handling process and equipment are described in Section 2.6.

The CH Bay has space for storing facility slip-sheets, empty pallets, and facility pallets loaded with CH Waste assemblies and transporting facility pallets with battery-powered forklifts or Facility Transfer Vehicles (FTVs) into the CLR. A battery charging area for battery-powered Waste Handling equipment is located along the north wall of the CH Bay, as is a site-derived waste storage area containing either a 55-gallon drum or an SWB.

The CH Bay and Room 108 are served by the CH Waste Handling Ventilation System which pulls air from both areas and exhausts that air through high-efficiency particulate air (HEPA) filters. The CH Waste Handling Ventilation System is designed to control the atmospheric pressure in the CH Bay and Room 108 at a lower pressure than that external of the WHB (airflows into Room 108 and the CH Bay).

The area ventilation is supplied based on constant volume and the exhaust airflow controlled by a pressure differential damper control system set to maintain the CH Bay at or below atmospheric pressure.

The CH portion of the WHB has a fire suppression system (FSS) consisting of overhead wet-pipe sprinklers. Emergency egress doors are located in the CH Bay, Room 108, and into the RH Bay.

2.4.1.1.3 Airlock 107

Airlock 107 is located in the northwest corner of the CH Bay and connects the CH Bay and Room 108. Airlock 107 can accommodate a TRUPACT-III, an SLB2, or facility pallets transported by battery-powered vehicles (forklifts, Automated Guided Vehicles, etc.). The airlock doors are interlocked such that only one door can be opened at a time. Each door is opened and closed by push buttons located near the door they control.

2.4.1.1.4 Room 108

Room 108 provides space for removal of SLB2 Waste Containers from TRUPACT-III shipping packages. Room 108 is equipped with a bolting station and a Payload Transfer Station. There is a monorail hoist at the bolting station. The bolting station is used for removing and installing the TRUPACT-III cover and closure lid. The Payload Transfer Station is used for extracting the SLB2 payload from the TRUPACT-III and placing the SLB2 on a facility pallet. The TRUPACT-III Waste Handling equipment and process are described in Section 2.6.

Room 108 is served by the CH Waste Handling Ventilation System. An emergency egress door is located on the west wall of Room 108 that exits the WHB without an airlock.

2.4.1.1.5 Shielded Storage Room

The Shielded Storage Room, located in the southeast corner of the CH Bay, is approximately 19 feet long by 15 feet wide by 15 feet tall and is accessed from the CH Bay through thick steel shield doors. The walls, floor, and ceiling are approximately 2-foot-thick reinforced concrete. The Shielded Storage Room has a smoke detector alarm initiator and overhead wet-pipe sprinklers which are part of the CH Bay FSS. The Shielded Storage Room is used for the temporary storage of Waste Containers with discrepant paperwork, surface contamination, or higher dose rates. One facility pallet of CH Waste assemblies can be stored in the Shielded Storage Room.

2.4.1.1.6 Conveyance Loading Room

The CLR is located between the CH Bay and the Waste Shaft Collar Room and serves as an airlock between the two and the outside. The CLR contains an electrically powered conveyance loading car that rides on rails embedded in its floor. The rails extend from the CLR to the pivot rails on the west side of the Waste Shaft Collar. A battery-powered forklift or FTV transports a loaded facility pallet from the CH Bay into the CLR. A forklift places the pallet on the conveyance loading car, while the FTV uses its rail wheels to transport the loaded facility pallet into the Waste Shaft Collar Room. The airlock function of the room helps to maintain the Contact-Handled (CH) Waste Handling (WH) Confinement Ventilation System (CVS) pressure. The conveyance loading car or FTV transports a facility pallet into the Waste

Shaft Collar Room and onto the Waste Shaft Conveyance. CH Waste transport routes in the WHB are shown in Figure 2.4-8.

2.4.1.1.7 Waste Shaft Collar Room

The Waste Shaft Collar is enclosed with a fence to prevent inadvertent access to the shaft. The fence has gates that are interlocked such that if a gate is open, the conveyance cannot be moved, or if the conveyance is moving and a gate is opened, the conveyance emergency stop is actuated. Pivot rails at the Waste Shaft Collar are located in the rails serving the CLR and in the rails serving the FCLR. The motor/screw activated pivot rails must be in the horizontal position when loading or unloading the Waste Shaft Conveyance and in the vertical position any time the Waste Shaft Conveyance is not at the CLR/FCLR level. When the conveyance loading car or the FTV is loading CH Waste assemblies on the Waste Shaft Conveyance, the pivot rails serving the FCLR are in the vertical position; conversely, when the Facility Cask Transfer Car (FCTC) is loading the Waste Shaft Conveyance, the pivot rails serving the CLR are in the vertical position. The fence gate and pivot rails are electronically interlocked with the Waste Shaft Conveyance controls such that the conveyance cannot be moved until the gates are closed and both sets of pivot rails are in the vertical position.

2.4.1.2 Remote-Handled Waste Handling Facilities

2.4.1.2.1 Remote-Handled Bay

The RH Bay is a high-ceiling bay area for the receipt and handling of the RH-TRU 72-B shipping packages. The RH Bay can accommodate a maximum of two trailers and one trailer jockey or transport tractor at one time. Trailers are brought into the RH Bay through a set of double doors on the east end of the RH Bay. The doors remain open until the trailer jockey or transport tractor has exited the RH Bay. After the trailer jockey or transport tractor exits the RH Bay, the doors are closed before the RH shipping package is lifted from the transportation trailer and transferred to a Road Cask Transfer Car (RCTC). The RH Bay ceiling is higher than that of the CH Bay because the RH shipping packages are lifted from their transport trailers inside the RH Bay, whereas the CH shipping packages are removed from their transport trailer in the WHB parking area.

The RH Bay has an overhead 140/25-ton bridge crane, primarily used for lifting and moving RH shipping packages. The RH Bay floor has embedded railroad tracks extending from the WHB Parking Area Unit through the double entry doors and ending with rail stops located approximately 25 feet from the west wall of the RH Bay. The railroad tracks were originally designed to be used for railcar delivery of RH shipping packages. No railcars have been used to deliver any TRU Waste to the WIPP site and there is no plan to use them. Another set of rails, with rail stops at both ends, extend from the cask preparation stand into the CUR. These rails guide the electric-powered RCTC. An additional set of rails, embedded in the floor near the west end of the RH Bay, runs north and south through a pair of thick steel doors separating the RH Bay and FCLR to a turntable in the FCLR. The turntable can be positioned such that the rails can be used to guide the FCTC between the Facility Cask Rotating Device (FCRD) and the Waste Shaft Collar Room or between the RH Bay and the FCLR. There are rail stops in the RH Bay and at the FCRD.

Two types of RCTCs are used in the RH Bay. One RCTC is designed and constructed to support the RH-TRU 72-B shipping container during Waste Handling in the RH Bay and the CUR, while the other is designed and constructed to support the 10-160B shipping container. The RH Bay also contains storage stands for empty RH-TRU 72-B shipping containers and the empty shielded insert. The RH Waste Handling area is shown in Figures 2.4-9 and 2.4-10, with sectional views shown in Figures 2.4-11 and 2.4-12. The RH surface facilities Waste Handling equipment and process is described in Section 2.5.

The area ventilation is supplied based on constant volume and the exhaust airflow is controlled to maintain the room at a pressure at or below atmospheric pressure and a pressure differential of +0.05 inches in water gauge with respect to the CH Bay.

2.4.1.2.2 Hot Cell Complex

The Hot Cell Complex consists of several rooms, including the CUR, the Transfer Cell, the Operating Gallery, Lower Hot Cell, and the Upper Hot Cell. The Hot Cell Complex is constructed of concrete walls, floors, and ceilings up to 54 inches thick, which provide permanent radiation shielding for personnel whenever RH Waste Canisters are not in a shipping package, shielded insert, RH Waste Cask (either the Facility Cask or the Light Weight Facility Cask (LWFC)). The shielding is designed for an internal gamma surface dose rate of 400,000 rem per hour and for an internal neutron surface dose rate of 45 rem per hour (ECO 11611, *Evaluation for Hot Cell Structural Degradation*). Figure 2.4-11 and Figure 2.4-12 show the RH area arrangement. The Hot Cell Complex is located in the north side of the RH Bay. The Upper Hot Cell floor is 31 feet wide, 57 feet long, and located at reference elevation 123 feet. The ceiling of the Upper Hot Cell is at reference elevation 156 feet. The Upper Hot Cell Operating Gallery floor is at reference elevation 123 feet. The Manipulator Repair Room, located at the west end of the Upper Hot Cell Gallery, has a floor reference elevation of 127 feet. The Crane Maintenance Room is located directly above the Manipulator Repair Room. The Transfer Cell, approximately 10 feet wide and 79 feet long, is below the Upper Hot Cell at reference elevation 76 feet. The Transfer Cell Service Room, located toward the west end of the Transfer Cell, is at reference elevation 86 feet. The FCLR is located at the west end of the Hot Cell Complex.

The Hot Cell Complex has electronically controlled interlocks to ensure the system shielding and containment functions are maintained. Conditions are prevented that could allow a canister to be unshielded or damaged. The specific components that are interlocked include the Facility Cask, Transfer Cell Shuttle Car, Grapple Hoist, CUR and Hot Cell cranes, CUR Shield Valve, Hot Cell Shield Valve, and Transfer Cell Shield Valve.

2.4.1.2.3 Cask Unloading Room

The CUR has 54-inch-thick concrete walls, ceiling, and floor for radiation shielding. The 140-ton concrete-filled steel shield door at the entrance to the CUR, when closed, provides radiation shielding for personnel in the RH Bay during removal of RH Waste drums from the 10-160B shipping package. The CUR shield door is also closed during operations involving transfer of items between the Upper Hot Cell and the CUR when there is RH Waste in the Upper Hot Cell. The CUR shield door remains open when processing a RH-TRU 72-B shipping package from the CUR into the Transfer Cell. During RH-TRU 72-B processing, the 72-B Waste Canister is not removed from its cask until it is lowered into the Transfer Cell. The CUR has a 54-inch-thick concrete ceiling with two concentric shield plugs separating it from the Upper Hot Cell. A 54-inch-thick concrete floor and an 8-inch-thick steel shield valve separate the CUR from the Transfer Cell. The control panel for the CUR 25-ton crane is located in the southwest corner of the CUR. The CUR 25-ton crane is used to transfer the RH-TRU 72-B shipping package or the shielded insert between the CUR and Transfer Cell. Personnel are restricted from being in the CUR during the transfer of RH Waste drums from the 10-160B shipping container into the Upper Hot Cell.

The 140-ton concrete-filled CUR shield door is approximately 8 feet long by 22 feet high by 4 feet thick. The CUR shield door is guided by rollers that ride in a metal channel attached to the outer wall of the CUR. The CUR shield door is opened and closed at a rate of approximately 15 feet per minute (fpm) by a pneumatic cylinder/piston and, when moving, is supported by a cushion of air exhausting from the door bottom (an air bearing). If the door encounters an obstacle while it is in motion, the impact causes loss of

the air bearing and the door settles to the floor. When closed, an inflatable seal is pressurized forming a partial seal between the inside of the door and the surface around the CUR door opening. When the door is closed, the air supply is removed and the door rests on the floor. The operator console for the CUR shield door is located such that there is direct visual access to the door travel area. The CUR shield door is interlocked with other shielding equipment as follows:

- The CUR shield door must be closed before the Upper Hot Cell shield plugs can be removed.
- The CUR shield door cannot be opened with the Upper Hot Cell shield plugs removed.
- The CUR shield door must be closed before the Upper Hot Cell crane grapple can be raised when it is positioned over the Upper Hot Cell floor shield plugs.

2.4.1.2.4 Upper Hot Cell

The Upper Hot Cell is a room with 54-inch-thick concrete walls that provides the following:

- A shielded location designed for unloading the RH Waste drums from their 10-160B drum carriage units.
- Temporary storage for RH Waste drums.
- Facility canister storage locations (floor wells): six canister storage wells on the east side, two canister storage wells at the northwest inspection station, and one at the northeast inspection station.
- An area for inspecting the physical integrity of the drums.
- An area for performing radiological contamination surveys and identification verification of each drum.
- An area for loading drums into facility canisters.

Details of the Upper Hot Cell area are shown in Figure 2.4-10, Figure 2.4-11, and Figure 2.4-12. The bridge-mounted overhead-powered manipulator operates in the Upper Hot Cell with rails at reference elevation 141 feet. The Upper Hot Cell crane operates above the overhead-powered manipulator, with its rails at reference elevation 148 feet. The Operating Gallery has space for operating personnel to monitor and control all operations in the Upper Hot Cell. Six shielded viewing windows between the Operating Gallery and the Upper Hot Cell allow nearly 100 percent visual observation of all operations in the Upper Hot Cell. A transfer drawer is provided at the radiological inspection station for transferring surface contamination assessment swipes from the Upper Hot Cell to the transfer drawer enclosure in the Operating Gallery.

Access to the Upper Hot Cell from the CUR is through two 54-inch-thick concrete shield plugs in the Upper Hot Cell floor. The large plug has an approximate diameter of 9 feet and contains a smaller concentric plug that has an approximate diameter of 3 feet. Both plugs must be in place before a shipping package can enter or exit the CUR. When installed, the plugs provide shielding corresponding to the level of radiation protection required by the CUR. The CUR functions as an airlock between the Upper Hot Cell and the RH Bay when the CUR shield door is closed. The Upper Hot Cell is maintained at the lowest negative pressure in the RH Complex and air leakage is from the RH Bay through the CUR into the Upper Hot Cell. Access to the Upper Hot Cell is controlled by locked doors and permitted only when there is no RH Waste present.

Structural degradation because of gamma and neutron exposure is not expected to occur in the Upper Hot Cell based on ECO 11611. Calculations performed in ECO 11611 showed that the expected radiation exposure did not approach the threshold for radiological damage to concrete or steel structural components.

2.4.1.2.5 Transfer Cell

The Transfer Cell, located beneath the CUR, the Lower Hot Cell, the Upper Hot Cell, and the FCLR, is separated from each by 54-inch-thick concrete and 8-inch-thick steel shield valves. The Transfer Cell contains the following:

- The shuttle car used to move the RH-TRU 72-B or shielded insert from beneath the CUR to below the FCLR.
- An RH-TRU 72-B shipping package inner lid bolt-detensioning robot.
- A radiological contamination swipe robot.
- A transport system for the radiological swipe samples.

Transfer Cell activities are monitored by closed-circuit television (CCTV) cameras. The Transfer Cell ceiling shield valve is located at the west end below the FCLR port. A light curtain is installed at the personnel entrance to the Transfer Cell for worker protection. If personnel enter the Transfer Cell, the light curtain beam is broken and the robots are deenergized. Normally, personnel are prohibited in the Transfer Cell when waste is in the Transfer Cell.

2.4.1.2.6 Transfer Cell Service Room

The Service Room, separated from the Transfer Cell by a 48-inch-thick concrete wall, contains a receive/send station for the radiological swipes from the Transfer Cell, a vent hood in which the swipe samples are removed from the transport carrier, the counting equipment for radiological analysis, a Continuous Air Monitor (CAM), the motor for the Transfer Cell Shuttle Car, and a grapple override tool for the Upper Hot Cell facility grapple. The Service Room is manned when transferring a RH Waste Canister from a RH-TRU 72-B shipping package in the Transfer Cell.

2.4.1.2.7 Crane Maintenance Room

The Crane Maintenance Room, at reference elevation 142 feet, is located above the Manipulator Repair Room at the west end of the Upper Hot Cell. The Crane Maintenance Room is located so that the Upper Hot Cell crane can be positioned directly into it for repair. The Crane Maintenance Room is separated from the Upper Hot Cell by a 30-inch-high, 54-inch-thick concrete shield wall that extends 21 feet before opening into the Upper Hot Cell, and a ceiling-mounted shield door. The shield door is approximately 34 feet wide by 12 feet tall and is constructed of steel beams with a solid steel cover approximately 2 inches thick. The shield door, weighing approximately 33,000 pounds, is opened and closed by a floor-mounted winch. The door overlaps the opening in the concrete shield wall to prevent radiation streaming into the Crane Maintenance Room from the Upper Hot Cell. Ventilation seal plates between the door and its jamb control airflow from the room into the Upper Hot Cell. The winch is operated by a key that remains with RH Waste Handling personnel. Access to the Crane Maintenance Room is administratively controlled such that the Crane Maintenance Room shield door cannot be opened when RH Waste is in the Upper Hot Cell. The Crane Maintenance Room is fire protected by an automatic sprinkler system.

2.4.1.2.8 Facility Cask Loading Room

The FCLR, part of the Shaft Access Area, has a 54-inch-thick concrete floor and contains the FCRD, the turntable, the shield bell, the telescoping port shield, and a grapple hoist. The equipment is used to transfer RH Waste Canisters from the Transfer Cell into the RH Waste Cask and to transport the loaded RH Waste Cask onto the Waste Shaft Conveyance. An operating console, located behind a thick concrete shadow shield with a shield window in the north portion of the room, is used to control the FCLR and Transfer Cell Waste Handling activities. The FCLR is fire protected by an automatic overhead sprinkler system, part of the RH Bay FSS, and functions as an airlock between the Waste Shaft Collar Room and the Transfer Cell and RH Bay.

The FCLR grapple hoist is ceiling mounted. The grapple is in the shield bell. When the grapple is lowered to engage the pintle of an RH Waste Canister in the Transfer Cell, the shield bell is also lowered until it rests on the top shield valve of the RH Waste Cask. The shield bell provides radiation shielding while the RH Waste Cask top shield valve is open.

The FCRD is used to rotate the RH Waste Cask between the horizontal and vertical positions. The RH 72-B canisters are lifted into the RH Waste Cask when the cask is in the vertical position.

The FCLR has a pair of rails on which the electrically powered FCTC transfers the RH Waste Cask between the FCRD and the Waste Shaft Conveyance.

2.4.1.3 Waste Hoist Tower

The Waste Hoist Tower, located between the CH and RH portions of the WHB, is five floors high. The first floor is the Waste Shaft Collar Room. The Waste Hoist Master Control Station is on the second floor. The Waste Hoist, motor, brakes, maintenance cranes, and associated hydraulic systems are located on the fifth floor. The Waste Hoist Tower is fire protected by a wet-pipe sprinkler system that is part of the CH Bay FSS.

The maintenance cranes are parked away from the hoist drum. The manually powered 2-ton crane is parked with the wheels blocked. The electrically powered 30-ton crane is deenergized when parked. The Waste Hoist Tower structure prevents either crane from falling down the Waste Shaft.

2.4.1.4 Waste Handling Building Mechanical Equipment Room

The WHB Mechanical Equipment Room is on the second floor of the CH portion of the WHB. The room contains the CH Waste Handling areas and RH Bay CVS's heating, ventilation, and air conditioning (HVAC) equipment and controls, HEPA filters and exhaust fans. The Hot Cell Complex HVAC controls are also located in the Mechanical Equipment Room. The WHB vacuum system equipment and controls are located in Room 201 adjacent to the WHB Mechanical Equipment Room.

2.4.2 Building 412

Building 412 (the TMF) is located to the west side of the WHB (Figure 2.4-4) and shares a common wall with the CH Bay. Structural portions of the building are designed to withstand the DBE and DBT because of its interface with the WHB. The equipment in the TMF is not seismically restrained. The TMF roof is designed to withstand a snow load of 27 lb/ft^2. The TMF is used to store material and equipment and has battery-charging stations for charging battery-operated vehicles.

2.4.3 Exhaust Filter Building

The Exhaust Filter Building (EFB) contains the UG Ventilation Exhaust HEPA filtration equipment and is located north of the Exhaust Shaft. The EFB provides for walk-in HEPA filter change-out. During normal operations, air is pulled into the UG from the Air Intake Shaft, Salt Handling Shaft, and Waste Shaft. Use of the Supplemental Ventilation System (SVS) will alter this flow pattern as described in Section 2.7.3.8.3. Air is drawn up the Exhaust Shaft and then filtered before discharging to the atmosphere. Approximately 60,000 actual cubic feet per minute (acfm) is pulled through the EFB HEPA filtration equipment by one of three 860 fans.

Two interim skid-mounted HEPA filter and fan units (the Interim Ventilation System (IVS)) can be used to add approximately 54,000 acfm filtered airflow from the UG. The skid-mounted units provide for bag in and bag out HEPA filter change-out and the capability to take down the EFB HEPA filtration equipment for maintenance. The interim HEPA filter system is located east of the Exhaust Shaft. The inlet plenum of the interim HEPA filter system is connected using the ductwork of the disconnected 41-B-700A exhaust fan. The discharge from both skid-mounted HEPA filters and fan units is connected using ductwork to the existing monitored discharge. The EFB layout is shown in Figure 2.4-13.

The EFB also contains the EFB HVAC equipment, UG and EFB ventilation control panels, and supporting electrical motor control centers and distribution panels. The interim ventilation in the Electrical Building contains control panels, motor control centers, and variable frequency drivers for supporting the IVS. The EFB, IVS, and associated ductwork are protected from inadvertent vehicle impacts by moveable physical barriers. The barriers are positioned and maintained in accordance with the appropriate safety management program.

2.4.4 WIPP Shafts and Underground Facilities

2.4.4.1 WIPP Shafts

There are four WIPP shafts: Air Intake, Salt Handling, Waste, and Exhaust. The principal components of the four WIPP shafts are the Shaft Collar, the lined portion of the shaft, the concrete key portion, the unlined portion, the Shaft Station, the shaft conveyances, and the shaft conveyance support furnishings.

Shaft collars are located at the surface, which is approximately 400 feet above the historic floodplain of the Pecos River. Shaft collars are raised above surrounding ground to prevent water running into the shafts. The shaft collars, except for the Exhaust Shaft, are surrounded by fencing and gates to prevent unauthorized entry and to minimize the possibility of items falling into the shafts.

The lined portion of each shaft extends from the top of salt to the surface. The salt sections of the Waste and Exhaust Shafts are rock bolted and have wire mesh, as are portions of the salt sections of the Air Intake and Salt Handling Shafts.

The Salt Handling Shaft extends about 110 feet below the disposal level to provide a salt loading pocket and a sump. The Waste Shaft extends about 118 feet below the disposal level to accommodate tail rope dividers, guide rope weights, and a sump.

The Salt Handling Shaft is the only means of hoisting mined salt, is a secondary source of intake air, exhausts air for SVS operation, and is a route for power, control, and communications cables from the surface to the UG. The Air Intake Shaft is the primary source of intake for UG ventilation. The Waste Shaft provides the only means of lowering TRU Waste for disposal, is the source of air for ventilating the Waste Shaft Station, and is a route for power, control, and communications cables from the surface to the

UG. The Waste Shaft has an Auxiliary Air Intake Tunnel to provide additional airflow to the Waste Shaft Station by adjusting dampers and balancing pressure in the Waste Hoist Tower.

The Exhaust Shaft provides the only path for the exhaust of air from the UG emplacement areas. SVS operation upcasts uncontaminated air from the north and construction circuits through the Salt Handling Shaft. A metal elbow approximately 14 feet in diameter connects the Exhaust Shaft to the surface fan ducting.

The SVS is designed to provide supplemental ventilation to the uncontaminated areas of the UG. This is achieved through upcasting in the Salt Handling Shaft. Air will draw through the Air Intake Shaft for the uncontaminated area and be discharged through the Salt Handling Shaft or air leakage into the disposal area is filtered before exhaust to atmosphere. The increased ventilation through upcasting in the Salt Handling Shaft will provide the capability for mining and other maintenance and construction activities. Airflow during SVS operation is shown in Section 2.7.3.8.3 (Figures 2.7-10 and 2.7-11).

Air flow in the UG repository and waste hoist ventilation split is primarily driven by the negative pressure induced by the suction created by the exhaust fans. There is also a secondary driving force resulting from differences in air density between the various shafts and the UG. This is called the natural ventilation pressure (NVP).

During hot weather, the air normally flowing from the surface to the UG is warmer and less dense (lighter) than the cooler underground air. The potential in low exhaust flow or low fan pressure configurations, with the Air Intake Shaft covered, is to cause a relatively small amount (generally less than 10,000 cfm) of upcasting to occur at the Air Intake Shaft. The small quantity of upcast air is not contaminated as it is supplied by the Salt Shaft. Since the Waste Shaft is enclosed, the air is generally cooler than the ambient air in summer time conditions. The cooler air in the Waste Shaft wants to downcast. This helps ensure that the Waste Shaft is downcasting and air is flowing from the Waste Shaft toward the Exhaust Shaft.

During cold weather, the ambient air entering the UG is colder and denser (heavier) than the underground air. Hence, in cold weather the NVP augments the exhaust fan suction pressure. The positive NVP increases the downcast air flow in one or more shafts and increases the difference in pressure between the Construction and Waste Handling ventilation circuits. In low exhaust flow or low fan pressure configurations a positive NVP can cause more air to enter the UG than is being exhausted. In this situation one of the intake shafts can start upcasting. In general, the Air Intake Shaft will remain the downcast shaft while the Salt Shaft and/or Waste Shaft become upcasting shafts. The Air Intake Shaft can be partially or completely covered at the surface to reduce the potential for the Waste Shaft to upcast.

2.4.4.1.1 Waste, Salt Handling Shaft, and Air Intake Shaft Hoists and Shaft Conveyances

The WIPP hoists, conveyances, and shaft appurtenances were designed and constructed, and are maintained and operated, in accordance with the requirements of 30 CFR 57 Subpart R, “Personnel Hoisting.” A description of the components and operation of each of the WIPP hoists, and shaft conveyances and appurtenances are provided in the *Underground Hoisting System Design Description* (SDD UH00).

The Salt Handling Shaft Hoist is an electrically driven double-drum hoist but is operated in a single-drum unbalanced configuration. The Salt Handling Shaft Hoist motor is a 2,300-horsepower direct current motor. Each hoist drum has a parallel post brake. The brakes are normally applied and are released by applying pressurized air to the brake engines. The Salt Handling Shaft Hoist rope speed is approximately 1,800 fpm when transporting material and approximately 800 fpm when transporting personnel.

The Salt Handling Shaft Conveyance transports mined salt to the surface, material, and personnel between the surface and the UG disposal horizon. The Salt Handling Shaft uses wooden guides in the shaft and the headframe is constructed of structural steel.

The Air Intake Shaft Hoist is an electrically driven unbalanced single-drum hoist. The Air Intake Shaft Hoist motor is a 400-horsepower 480-volt, three-phase motor. The Air Intake Shaft Hoist has brakes on the Air Intake Shaft Hoist drum and two thruster brakes on the pinion shaft. All brakes are normally applied and are released by separate brake engines.

The Air Intake Shaft Conveyance is used for emergency egress for personnel working in the WIPP UG, such as maintenance, operations support, and support of scientific inquires. In the event of loss of electrical power, the Air Intake Shaft Hoist motor can be electrically powered by the WIPP site backup diesel generators.

The Waste Hoist is an electrically driven friction hoist. The Waste Hoist motor is a direct-connected 600-horsepower direct current motor. The Waste Hoist maximum rope speed is 500 fpm. There are two brake units acting on each of the two brake discs on the hoist drum. The brake units are normally applied and are spring set and hydraulically released. Either set of brakes can stop a fully loaded conveyance under all conditions. In the event of a control failure, power failure, or loss of hydraulic pressure, the brake units automatically return to their normal applied position. There are two separate brake hydraulic systems and if there is a loss of pressure in the primary system, the hoist brake system will automatically switch to the standby system. The hoist control system will set the brakes by dumping the brake hydraulic system pressure if for any reason the brake hydraulic pressure is not released within a few seconds after the application of the brake set signal. The hoist control system is equipped with indications for brake set, brake released, and brake wear.

The Waste Hoist Control System monitors system operations and conditions and, if it detects malfunctions or abnormal operations (such as over-travel, over-speed, power loss, circuitry failure, or starting in the wrong direction), it actuates an alarm for that condition and shuts down the hoist. Eleven signals, two analog and nine contacts, are generated by the Waste Hoist Control System during Waste Hoist operations. These signals provide local indications and are transmitted to the Central Monitoring Room (CMR) for remote monitoring.

The main purpose of the Waste Shaft Conveyance is to transport TRU Waste from the WHB to the Waste Shaft Station. It could be used to transport TRU Waste from the Waste Shaft Station to the WHB. It is also used to transport personnel, material, and equipment. Personnel, material, and equipment are not transported at the same time TRU Waste is transported. The Waste Hoist Tower structure fully supports the Waste Hoist motor and drum, control system, brake system, deflection sheave, and electrical power system (transformer, power supply, etc.) and is designed to withstand the DBE. The Waste Hoist systems in the shaft and all shaft furnishings are designed to resist the dynamic forces of the hoisting operations (the dynamic forces are greater than the seismic forces on the UG facilities). The Waste Shaft Conveyance is designed for a maximum payload of 90,000 pounds. During loading and unloading operations, the conveyance is steadied by fixed guides. A chairing device, located at the Waste Shaft Station, prevents the conveyance from moving up or down because of rope stretch when heavy loads are removed from or added to the conveyance.

Hoist, tail, and guide ropes are provided for the safe operation of the Waste Shaft Conveyance and the counterweight. There are six hoist head ropes, any two of which can support the weight of the shaft conveyance, the counterweight, and the maximum shaft conveyance load. The three tail ropes are used to approximately balance the weight of the six head ropes. There are four guide ropes for the conveyance

and two guide ropes for the counterweight. Tension on the guide ropes is maintained by weights on the bottom of each rope.

A conveyance and counterweight over-travel arrester system will stop movement if the normal control system fails. Four timbers are provided at the tower and the sump regions for both the conveyance and the counterweight to assist in absorbing energy to stop an over-traveling conveyance or counterweight. Retarding frames rest in notches either at the top of the wood arresters (sump area) or at the bottom of the wood arresters (tower area). The retarding frames have knives that cut into the timbers if driven by the conveyance or the counterweight.

If the conveyance over-travels against the upper crash beams and the head ropes fail, safety lugs on the conveyance mate with pivoting dogs on the catchgear mounted in the head frame to prevent the conveyance from falling if the head ropes break. The counterweight catchgear system functions in a similar fashion to stop the counterweight from falling. Each catchgear frame is mounted on a hydraulic shock absorber that absorbs energy from a descending conveyance or counterweight.

Emergency stop buttons are provided at the Master Control Station and the control stations at the Waste Shaft Collar, at the Waste Shaft Station, and on the conveyance. The emergency stop buttons are operable in all modes of hoist operation, and when pressed, will deenergize power to the hoist motor and the hoist brake hydraulic systems, setting the hoist brakes.

At the beginning of each shift, inspections of the Waste Shaft Conveyance, rope attachments, cage doors, and collar doors are made. The hoist operator visually inspects the hoist and hydraulic systems for general condition and possible leaks. The communication systems between the hoist operator, top lander, bottom lander, and the conveyance are tested and verified to be operational. Finally, the operator confirms the correct operation of the emergency stop tripping logic, limit switches, over-travel, position indicator, and braking mechanisms and the empty conveyance is operated through one round-trip. If all inspections and tests are satisfactory, the Waste Hoist system is released for operation.

The Waste Shaft is inspected weekly to detect fracturing, corrosion, deterioration, and water intrusion. A comprehensive preventive maintenance program, including all required MSHA inspections, is in place. Additional testing and inspections are identified in the *Underground Hoisting System Design Description* (SDD UH00). The Waste Shaft, Waste Hoist, and Waste Shaft Conveyance arrangement is shown on Figure 2.4-14.

2.4.4.2 Underground Facilities

2.4.4.2.1 General Design

The WIPP UG facilities provide the access, space, facilities, and equipment that directly support scientific programs; waste transport, emplacement, and disposal; and the mining, construction, and maintenance processes performed in the UG. The UG facility is centrally located within the 16-section WIPP site boundary and covers a footprint of approximately 550 acres. The UG facility is located 2,150 feet below the surface in bedded salt of the Permian Salado Formation. The Salado Formation extends from about 850 feet below the surface to about 3,000 feet below the surface. Halite is the most abundant mineral in the Salado Formation. A potash zone exists about 200 feet above the facility level. The facility horizon lies within a 40-foot-thick unit of halite, argillaceous halite, and polyhalitic halite.

This UG facility is maintained and operated in accordance with the applicable portions of 30 CFR 57, and the New Mexico Mine Safety Code for All Mines administered by the New Mexico Bureau of Mines

(19.6.5 NMAC). The WIPP UG facility is an MSHA Category IV, or a noncombustible and non-gassy mine.

Locations in the UG are identified with a coordinate system centered on the Salt Handling Shaft. A drift that runs north and south that is located 300 feet east of the Salt Handling Shaft is identified as E-300. A location in Drift E-300 that is 90 feet south of the Salt Handling Shaft is identified as E-300/S-90. The Exhaust Shaft is at S-400/E-475, the Air Intake Shaft is at N-0/W-625, and the Waste Shaft is at S-400/E-25.

The various areas are separated by salt pillars and ventilation system bulkheads. Bulkheads, overcasts, and airlocks are constructed of noncombustible materials except for flexible flashing used to accommodate salt movement. Some mining construction activities may be required in an active Disposal Room; however, the activities can be separated from the disposal processes and areas by schedule or time, ventilation controls, and temporary bulkheads. UG mining procedures and cavity dimensions incorporate the results of the salt creep analysis in the *Waste Isolation Pilot Plant Design Validation Final Report* (DOE/WIPP 86-010).

The UG support facilities and their ventilation flows in the shaft pillar area are shown in Figure 2.4-15. The support facilities include a maintenance area, vehicle parking area with plug-in battery charging, sanitary waste transfer station, electrical substation, welding shop, offices, materials storage area, emergency vehicle parking alcoves, oil storage area, a diesel equipment fueling station (W-170, near N-150), and a mechanical shop. When oil and fuel are not in-transit or being used, they are stored in the designated areas.

2.4.4.2.2 Experiments in Experimental Facilities Area

The Experimental Facilities Area was initially used for evaluating the interaction of simulated waste and thermal sources on bedded salt under controlled conditions. Portions of this area are now used for conducting scientific experiments, including the Enriched Xenon Observatory, the Segmented Enriched Germanium Assembly and Multiple Element Germanium Array, and the Copper Electro Forming Project.

The Enriched Xenon Observatory experiment investigates neutrino-less double-beta decay, a rare type of nuclear process that may allow measuring the mass of neutrinos. The Enriched Xenon Observatory facilities are at E-300 between N-1100 and N-1400.

The Segmented Enriched Germanium Assembly and Multiple Element Germanium Array experiments investigate double-beta decay to determine the mass of the neutrino. The terms Segmented Enriched Germanium Assembly and Multiple Element Germanium Array refer to a collection of counting stations that support the research goals for the experiment originally called the Majorana experiment. The developmental work of the Segmented Enriched Germanium Assembly and Multiple Element Germanium Array collaboration is conducted at the western end of the S-90 Drift, at approximately W-850 in the Room Q alcove.

The Copper Electro Forming Project, located in the Room Q alcove, is an experiment to measure the natural activity present in copper parts fabricated in the UG using electroforming techniques. Limited amounts of chemicals, cryogenic materials, and refrigerants used to support the experiments are stored and used in the experiment location.

The Experimental Facilities Area is also the location of the Salt Disposal Investigations. The Salt Disposal Investigations includes a proof-of-principle field test for the disposal of heat-generating nuclear waste. The proposed field test portion will directly test a safe disposal arrangement in the salt formation

that balances heat loading with waste and repository temperature limits. The test program will provide knowledge of the behavior of the thermomechanical, hydrological, and chemical behavior of salt and wastes disposed in salt to form the technical foundation for design, operation, coupled process modeling, and performance assessment of future salt repositories for heat-generating waste (DOE/CBFO 11-3470, *A Management Proposal for Salt Disposal Investigations with a Field Scale Heater Test at WIPP*).

The Salt Defense Disposal Investigations area shares the Salt Disposal Investigations area. Salt Defense Disposal Investigations will test the disposal of cooler DOE-Environmental Management (DOE-EM) managed wastes, which covers an intermediate heat range relevant to Defense High-level Waste, most of the defense Spent Nuclear Fuel (SNF) inventory, and some of the commercial Spent Nuclear Fuel inventory.

2.4.4.2.3 Personal Emergency Equipment

Self-contained Self Rescuers

WIPP is required by New Mexico State Mining Law 69-8-16 to provide self-contained self-rescuers in the UG. A self-contained self-rescuer must be available for each person in the UG. A self-contained self-rescuer unit, which is enclosed inside polycarbonate housing, contains a small cylinder of pressurized oxygen and a carbon dioxide scrubber.

The self-contained self-rescuers are stored in metal enclosures that are either at fixed locations or on movable skids.

Trauma Kits

Trauma kits are placed in the UG to assist in medical emergencies. These kits consist of a metal container containing emergency medical supplies including a small cylinder of pressurized oxygen. The trauma kits are placed near the Waste Shaft Station and toward the southern end of E-140, located such that they are not in the path of vehicular traffic.

2.4.4.2.4 Underground Mining Methods, Layout, and Development

Mining Methods

Mining at WIPP is performed by continuous mining machines. One type of continuous mining machine is a road header or boom-type continuous miner operating a milling head. The milling head rotates in line with the axis of the cutter boom, mining the salt from the face. The mined salt is picked up from the floor by the loading apron. The mined salt is pulled through the miner on conveyers and loaded into haul vehicles.

Another type of continuous mining machine is a drum miner operating a head that rotates perpendicular to the axis of the cutter boom. The mined salt is pulled through the miner on a chain conveyor and then loaded into haul vehicles. Before mining in new areas, probe holes are drilled to relieve any pressure that may be present. After mining, vertical pressure-relief holes are drilled up at the main intersections of drifts and crosscuts.

During and immediately after mining, a sounding survey of the excavation ceilings is made to identify areas of weakness, which might represent safety or stability problems. Routine sounding of the roof, especially in unbolted areas, is commonly performed throughout the life of an opening. Ground control inspections and maintenance procedures for the UG are described in UG openings inspections.

Hand scaling, removal of salt with the continuous miners, or rock bolting may be accomplished if an area is identified as potentially unstable. Specific work packages are developed, as necessary, for mining and ground control.

Development of waste Disposal Rooms is based on the planned waste receipt rate. A panel is completed several months before initial waste disposal operations, to minimize the time a panel is open. Reducing the time a panel is open reduces required ground control activities within an active waste Disposal Room. Waste receipt is dynamic and varies depending on generator site operations and weather along transportation routes. Panel completion, however, is determined on a panel-by-panel basis. The rate a panel is mined depends on several factors, including ground conditions encountered, mining equipment availability, and hoisting capacity.

Mined Material

The salt removed during UG mining is brought to the surface by the Salt Handling Shaft Conveyance. Mined salt is loaded into the 8-ton Salt Handling Skip with a skip measuring and loading hopper, the skip is raised to the surface, and the salt is dumped through a chute to surface haulage equipment, which transports the salt to the surface salt pile.

Interface between Mining and Waste Disposal Activities

Separate mining ventilation and disposal ventilation circuits are maintained by means of bulkheads, overcasts, and airlocks made of noncombustible material, except for flexible flashing used to accommodate salt movement, in accordance with 30 CFR 57. The use of noncombustible materials along with salt surfaces minimizes the likelihood of a fire in one area of the UG propagating to another area. Air pressure in the mining ventilation circuit is maintained higher than in the disposal ventilation circuit to ensure that any leakage will result in airflow to the disposal side. The Underground Ventilation System (UVS) is discussed in Section 2.7. Panels being mined are in the mining ventilation circuit and panels with active waste emplacement are in the disposal ventilation circuit. Any mining necessary in the disposal circuit (to address ground control issues) is planned such that it is unlikely to be necessary at the active Waste Face and is not done in the Transport Path when waste is in transit to the Disposal Room.

2.4.4.3 Ground Control Program

The Ground Control Program at WIPP mitigates the potential for unplanned rock fall from the ceiling or ribs of openings. Ground control is in accordance with 30 CFR 57, Subpart B, “Ground Control.” From the time an opening is mined and throughout the life of the opening, action is taken to identify and remove or restrain any loose or potentially unsafe ground. Ground control is based on the following:

- Ground stability is maintained as long as access is not restricted or barricaded.
- Ground control maintenance efforts increase with the age of the openings.
- Ground control plans are specific but flexible.
- Regular ground control maintenance is required.

The WIPP Ground Control Program uses observational experience and analysis of salt behavior to anticipate future ground support requirements. To provide long-term ground support, the WIPP ground control system must accommodate the continuous creep of salt and retain broken fractured rock in the roof or walls. To aid in ground control activities, the WIPP UG is divided into over 100 zones. A database

containing the current status of each UG excavation zone is maintained and includes the physical state of the zone with respect to geometry, excavation age, ground support, and operational use.

The *Ground Control Annual Plan for the Waste Isolation Pilot Plant* (DOE/WIPP 02-3212) addresses technical aspects of the UG facility that are concerned with the design, construction, and performance of the UG structures and support systems. Each year, the Ground Control Annual Plan is updated to reflect developments in the WIPP ground support practices, materials, and any changes in operational requirements. The WIPP Ground Control Plans are living documents that keep ground control practice at the WIPP both current and responsive.

The WIPP Ground Control Program includes continuous visual inspections of openings, geotechnical monitoring, installation of ground support components, and analysis of ground support component failures. Ground control support systems may vary as different conditions are encountered. Support systems may be subjected to longitudinal and lateral loading because of the rock deformation. The anchorage components may undergo lateral deformation because of offsetting along clay seams or fractures and increasing tensile loading.

Visual examinations are performed by Waste Operations personnel. Inspections are performed at the beginning of each shift, weekly, monthly, and annually. Geotechnical field activities include data collection from geotechnical instrumentation, fracture surveys, and observations. Monitoring results are analyzed in comparison with established design criteria and are used in a variety of computer models. Analyses are performed to ensure that rock mass behavior is understood and proper ground control measures are instituted. Ground support is designed and specified to meet the requirements of 30 CFR 57, Subpart B. Maintenance activities ensure that ground conditions presenting a potential hazard are rectified.

Ground support at the WIPP includes spot bolting, pattern bolting, and supplemental bolting. Spot bolting as its name implies involves bolting of the ceiling or ribs, typically with mechanically anchored bolts, to address localized “spot” areas of potential ground instability. Pattern bolting generally involves the installation of a systematic mechanical anchored bolt pattern, in many cases accompanied by chain link mesh, over a larger area. Supplement bolting refers to the installation of additional bolts, beyond the initial pattern bolting, to provide additional support to an area with potential instability, and may consist of resin anchored bolts, chain link mesh and roof mats. The bolts used in bolting activities meet the requirements of 30 CFR 57, Subpart B. Periodic inspections of the ground conditions by MSHA provide an independent check making certain that the ground support is adequate for the ground conditions.

Ground control measures in an active panel may include removal of rock, bolting, and floor milling in portions of the panel that do not contain waste. Pattern bolting minimizes the need to remove rock from the ceilings of Disposal Rooms; however, milling the floor is expected to ensure the proper room dimensions and to ensure a smoother surface for waste transport and disposal. In the event that ground control measures are not sufficient to ensure safety, rooms may be closed.

The roof beam may be removed by mining if it is a cost-effective alternative to bolting or if the roof is highly fractured and removal will result in a safer working environment. The roof beam is that portion from the roof up to the next competent layer, typically just above the overlying clay and anhydrite layers. This option has been exercised in portions of E-140 south and areas in the north end of the UG. In the waste disposal area, no removal or remediation of the roof beam is possible after waste is emplaced.

The time expected for the roof beam to contact the waste stack in a panel will vary based on the height of a room, the closure rate, and the waste stack configuration. The typical waste stack height for three seven-packs of 55-gallon drums and a sack of magnesium oxide (MgO) is approximately 130 inches. The

repository stratigraphy for Panels 1, 2, 7, and 8 are different than for Panels 3, 4, 5, and 6. Roof falls were actually observed in Site Preliminary Design Validation and consisted of a triangular section of roof extending nearly the length and width of the room with its apex 7 feet high (SDD UH00). The Site Preliminary Design Validation had minimal installed ground support. If no waste was emplaced in a room, this type of roof failure could be expected for Panels 1, 2, 7, and 8. However, with waste placed in a uniform array it is likely that ground movement will reduce the distance from the ceiling to the waste stack such that the salt in the immediate roof becomes supported by the stack and no fall occurs. The ground control measures installed in Disposal Rooms have been effective because no roof fall in the active Disposal Rooms has occurred. However, roof bolts do, and are expected to fail. Bolt failure is based on stratigraphy, when the bolts were installed after mining an opening, and the length of the bolt. A database on roof bolt failures is maintained and failed bolts in accessible areas are replaced or remediated in a timely manner.

A roof separation was discovered in January 2015 in the Panel 3 access drift. The area involved had been identified for inclusion in the February 2014 outage re-bolting campaign, and the re-bolting was deferred due to the February 2014 events. The area was restricted from access in November 2014 due to ground control concerns prior to the separation. The area has since been addressed in the re-bolting campaign which was resumed in November 2014.

2.4.4.4 Disposal Facilities

The disposal facilities provide space for a maximum of 6.2 million ft^3 of TRU Waste in TRU Waste Containers. Figure 2.4-16 shows a typical Waste Container disposal configuration. The main entries and crosscuts in the repository provide access and ventilation to the disposal area. The main entries link the shaft pillar/service area with the disposal area and are separated by pillars. Typical entries are 13 feet high and 14 to 16 feet wide. The waste disposal area is designed so that each panel contains seven rooms. The locations of the panels are shown in Figure 2.4-2. Rooms within a panel have approximate dimensions of 13 feet high by 33 feet wide by 300 feet long. The rooms are separated by 100-foot-wide pillars. Boreholes are used for disposing of RH Waste Canisters. Boreholes are drilled into the ribs of the Disposal Rooms and room entries, to a depth of approximately 17 feet with a diameter of approximately 30 inches. The access and exhaust drift boreholes are approximately 34 feet from the corners of salt pillars that separate Disposal Rooms. Inside the Disposal Rooms, boreholes are located approximately 26 feet from the corner.

The amount of TRU Waste in each panel/room is limited by thermal, structural, and physical considerations, and emplacement is arranged not to exceed 10 kilowatts per acre. Based on criticality analysis, a spacing of 30 inches or greater between centers for RH Waste Canisters is allowed. Typical spacing will be 8 feet center-to-center for canister emplacement. A shield plug and shield ring, as required, provide shielding between the RH canister in the borehole and the room.

CH Waste is received at the WIPP site in drum assemblies, SWBs, SLB2s, or TDOPs. Drum assemblies and SWBs are stacked up to three high, and may be intermixed within rows and columns. Shielded containers will be received in a HalfPACT, in a three-pack configuration on a triangular pallet, surrounded by radial and axial dunnage components. The three-packs are stacked on a slip-sheet made of high-density polyethylene or cardboard, a maximum of two high of the same three-packs, in the interstitial spaces among the CH TRU Waste. No other waste assemblies or backfill MgO sacks will be placed on the top of a three-pack assembly of shielded containers. SLB2s are placed directly on the ground along the ribs or across the Waste Face and may also be intermixed within rows and columns. TDOPs are placed on the bottom row. Four-packs of 85-gallon drums and three-packs of 100-gallon drums are placed on top of assemblies of the same type or placed on the top row for stability reasons.

One waste assembly, with the exception of TDOPs and SLB2s, may be stacked on top of an SLB2 to form a two-tiered stack.

If waste volumes disposed in the eight panels fail to reach the design capacity, the DOE may use the four main entries and crosscuts adjacent to the waste panels. Drifts E-300, E-140, W-30, and W-170 from S-1600 to S-3650 are approximately 2,050 feet long. East–west crosscuts in this area are approximately 470 feet long. The layout of these excavations, labeled as Panel 9 and Panel 10, is shown on Figure 2.4-2.

2.4.4.5 Magnesium Oxide Backfill

"Assurance Requirements" (40 CFR 191.14, Subparagraph d), requires disposal systems to use different types of barriers (engineered and natural) to isolate the wastes from the accessible environment. "Engineered Barriers" (40 CFR 194.44) states that disposal systems shall incorporate engineered barrier(s) designed to prevent or substantially delay the movement of water or radionuclides toward the accessible environment. MgO is used to provide an engineered barrier that decreases the solubility of the actinide elements in TRU Waste. MgO essentially consumes the carbon dioxide that would be produced by microbial consumption of cellulose, plastic, and rubber in the emplaced CH Waste.

The WIPP receives the MgO in woven polypropylene super sacks, each containing approximately either 3,000 or 4,200 pounds of MgO. The super sack is constructed with woven polypropylene and reinforcing inserts (e.g., cardboard) such that it retains its contents for at least two years after emplacement without rupturing from its own weight. The super sacks are delivered to the UG using current shaft and material handling processes. Forklifts with push/pull attachments emplace the super sacks in the waste stack. In the event a super sack is breached, MgO is nonhazardous. MgO is an acceptable fire-extinguishing agent in the DOE complex where the potential for metal fires is present, such as in glovebox operations at generator sites (DOE-STD-1066-99, *Fire Protection Design Criteria*). While the use of MgO in the WIPP UG is not based on its acceptability as a fire extinguishing agent, in the event of a fire that may impact the disposal array, the powdered MgO would tend to suppress a fire in the waste array.

A super sack of MgO is placed on top of or on the floor next to Waste Containers in the disposal array. One super sack of MgO is typically placed on every other column and is typically sufficient to eliminate the carbon dioxide produced from the cellulose, plastic, and rubber contained in non-compacted waste. Additional MgO super sacks may be required for emplacement of compacted waste or other engineering-approved configurations because of the increased amount of cellulose, plastic, and rubber in the compacted waste.

2.4.4.6 Panel Closure System

On completion of waste emplacement in each Disposal Room, ventilation in that panel is no longer necessary. The installation of a panel closure system is a requirement of the HWFP. Figure 2.4-17 shows the approved panel closure system that isolates a filled panel from the active portions of the disposal area. There is also an interim panel closure system that may be used.

The panel closure system is a 12-foot-thick block and mortar explosion-isolation wall and a concrete barrier. The explosion-isolation wall component has been installed in the entries to Panels 1, 2, and 5. Panel closure removes the panel from active ventilation such that there is no ready path for radiological or hazardous releases to propagate to areas outside the panel. Panel closure also prevents events outside the panel from breaching Waste Containers inside the closed panel.

The interim closure system (Figure 2.4-18) consists of a substantial barrier and isolation bulkhead which has been installed in Panels 3 and 4 and may be used in subsequent panels. This type of barrier allows

monitoring of gas generation in a filled panel. The substantial barrier consists of a run of mine salt (or other suitable nonflammable fill material) placed against the Waste Face such that the height is halfway up the top tier of waste at the face and extends at least 10 feet beyond the base of the waste array into the panel entries. The chain link and brattice cloth are secured to the roof, ribs, and substantial barrier to minimize airflow through the filled panel. The substantial barrier prevents the top tier of waste from falling the full height of the waste stack. An isolation bulkhead or ventilation bulkhead is installed on the entry side of the substantial barrier to further reduce airflow and prevent human access to the filled panel. Sample lines for gas sampling and cables for geotechnical monitoring equipment pass between the flashing of the isolation bulkhead and the salt. The substantial barrier and isolation bulkhead protect the Waste Face from operational events in the entries such as vehicle collisions and fires.

The substantial barrier and isolation bulkhead restricts airflow through closed panels to minimize the motive force for radioactive or non-radioactive HAZMAT transport. Ground movement over time will further reduce airflow through a filled panel.

Gas generation rates in a filled panel are expected to be low, less than 1 percent methane (20 percent of the lower explosive limit) and less than 1 percent hydrogen (25 percent of the lower explosive limit) after five years (Golder, pers. comm. 2006; WTS, pers. comm. 2006). If gas generation rates are observed to be increasing more than expected or ground conditions in the panel entries becomes unfavorable, then a substantial barrier and isolation bulkheads or the explosion-isolation wall can be installed.

2.4.4.6.1 Panel 6 and Panel 7, Room 7 Closure

The State of New Mexico, Environment Department, *Administrative Order Under the New Mexico Hazardous Waste Act 74-4-13*, dated May 20, 2014, directed the closure of Panel 6, and Panel 7, Room 7. The closure barrier for Panel 7, Room 7 is planned without the substantial salt barrier since there are double bulkheads at the outlet and a large separation distance (~400 feet) to the inlet barrier. Panel and room closures were installed to block the inlet first.

The location of the isolation bulkhead for the Interim Closure of Panel 6 is very close to the “inby” (side closest to mine entrance) steel bulkhead of the Permanent Closure. The design for Interim Closure in Room 7 of Panel 7 consists of isolation bulkheads that are installed in the air intake and air exhaust entries of Room 7. On the air intake side (S-2520) these components are more than 400-feet away from the closest waste drums. On the air exhaust side (S-2180), the steel bulkhead is approximately 10 feet from the Waste Face.

In addition to the generator site emplaced Waste Containers in Panel 7, site-derived waste generated during mine recovery operations may be placed in approved CH Waste Containers, sealed, and added to Panel 7 prior to closure. This site-derived waste includes but is not limited to, vehicle/equipment cleaning cloths and materials and other materials used during UG decontamination activities. Contaminated vehicles/equipment may be moved into Panel 7 for closure. Vehicles and equipment in Panel 7, meet specific DOE Carlsbad Field Office (CBFO) approved recovery plan requirements for removal of combustible liquids, including fuel and hydraulic fluids.

2.4.4.7 Geotechnical Monitoring Program

The safety of the UG excavations is evaluated based on criteria established from actual measurements of rock behavior. The Geotechnical Monitoring Program provides measurement of rock mass performance for design validation, routine evaluation of the safety and stability of the excavations, and information necessary to predict the short- and long-term behavior of UG excavations. The criteria are regularly evaluated and modified as more field data are collected from the actual performance of the UG openings.

The instrumentation for open panels includes at least one borehole extensometer installed in the roof at the center of each Disposal Room. The roof extensometers monitor the dilation of the immediate salt roof beam and possible bed separations along clay seams.

Data collection, analyses, and evaluation criteria indicate changes in measured room closure rates over time and when those measured room closure rates exceed projected values. Areas where observed rates vary significantly from projected values are monitored more closely to determine the cause of the variance. If the cause is not related to mining activity, additional field investigation is undertaken to characterize the conditions. If the field data indicate ground conditions are deteriorating, corrective actions are performed. If ground conditions in a Disposal Room deteriorate and cannot be cost-effectively remediated, the room may be closed.

Geologic investigations also include geologic and fracture mapping and seismic monitoring. Borehole inspections can detect displacements, fractures, and separations occurring in the strata immediately surrounding the excavations. The results of geologic investigations provide continued confidence in the performance and geology of the site with respect to site characterization. The seismic monitoring system detects and records data for ground motion earthquakes that occur in the vicinity of the site. It provides computer analysis of the recorded data to generate response spectra plots of the events and provides initiation signals for the closure of dampers in the WHB ventilation systems.

Geotechnical data and the results of the geotechnical investigations are reported annually in the WIPP *Geotechnical Analysis Report for July 2009–June 2010* (DOE/WIPP 11-3177). The report describes monitoring programs, geotechnical data collected during the previous year, and the techniques used for data acquisition. The report details the geotechnical performance of the UG excavations, including shafts, and provides an evaluation of the geotechnical aspects of performance with respect to relevant design criteria.

2.4.5 Support Building

The Support Building is located on the south side of the main east to west road, and north of the WHB. The Support Building provides housing for administrative activities, change rooms, laboratories, operational support activities, and the CMR. The CMR is located on the second floor and provides space for the Central Monitoring System (CMS). The CMS is a computerized system that monitors specific equipment functions and conditions of the UG, the WHB, and its support systems such as HVAC and fire alarms.

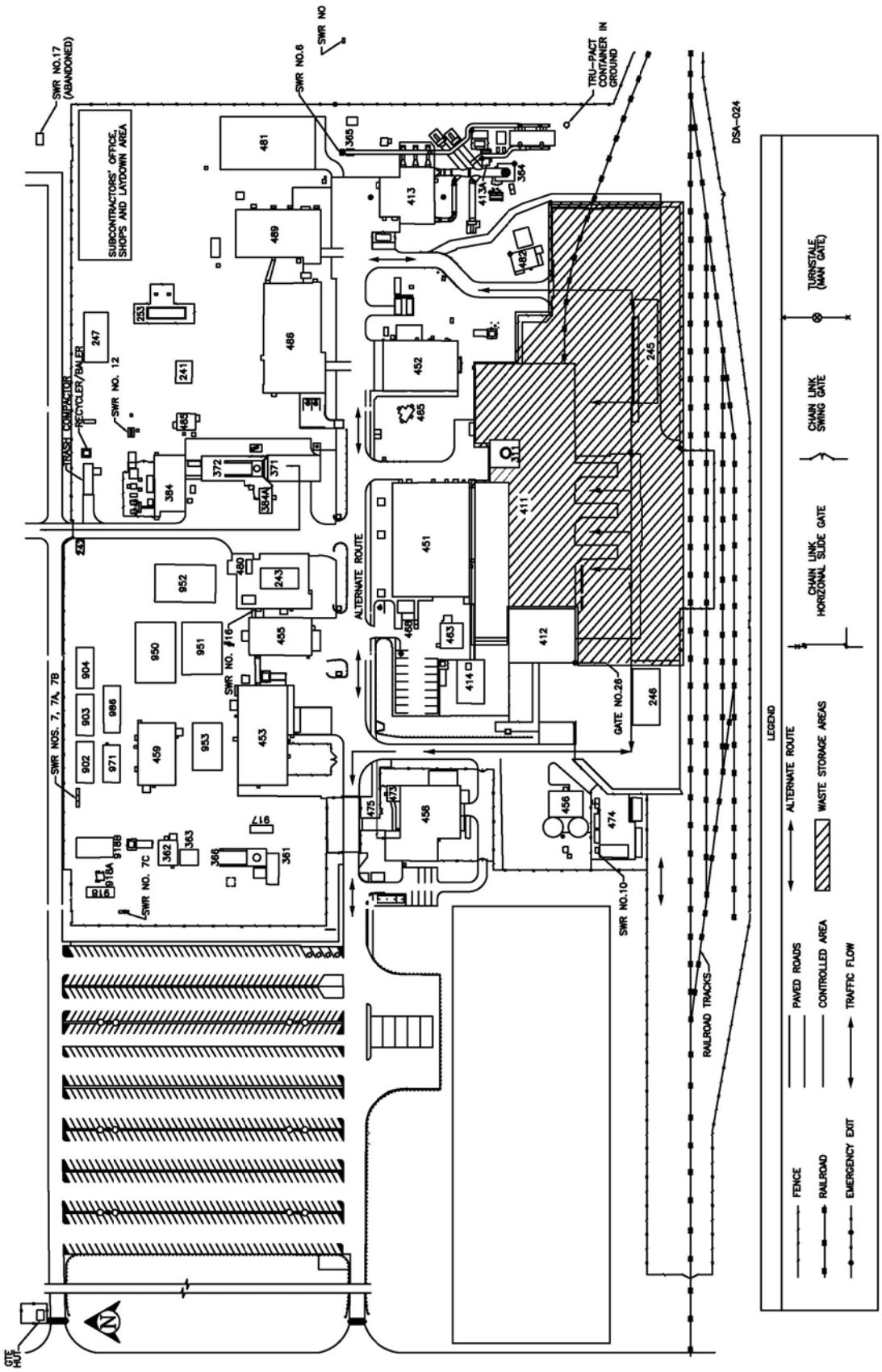

Figure 2.4-1. WIPP Surface Structures

Building / Facility	Description	Building / Facility	Description
241	Equipment Shed	453	Warehouse / Shops Building
242	North Gatehouse	455	Maintenance Shop
243	Salt Hauling Trucks Shelter	456	Water Pumphouse
245	TRUPACT Trailer Shelter	457N	Water Tank 25-D-001B
246	MgO Storage Shelter	457S	Water Tank 25-D-001A
247	North Maintenance Shop	458	Guard and Security Building
255.1	Diesel Generator #1 25P-E-503	463	Compressor Building
255.2	Diesel Generator #2 25P-E-504	465	Auxiliary Air Intake
311	Waste Shaft	473	Armory
351	Exhaust Shaft	474	Hazardous Waste Storage Facility
361	Air Intake Shaft	475	Gatehouse
362	Air Intake Shaft / Hoist House	480	Vehicle Fuel Station
363	Air Intake Shaft / Winch House	481	Auxiliary Warehouse
364	Effluent Monitoring Instrument Shed A	485	Compressor Building
365	Effluent Monitoring Instrument Shed A	486	Engineering Building
366	Air Intake Shaft Headframe	489	Training Building
371	Salt Handling Shaft	902	Office Trailer
372	Salt Handling Shaft Headframe	903	Office Trailer
384	Salt Handling Shaft Hoist House	904	Office Trailer
384A	Salt Hoist Operations	917	Connex
411	Waste Handling Building	918A	Volatile Organic Compound (VOC) Air Monitoring Station
412	TRUPACT Maintenance Facility	950	Work Control Trailer
413	Exhaust Filter Building	951	Office Trailer
413A	Effluent Monitoring Room A	952	Office Trailer
413B	Effluent Monitoring Room B	953	Security and Procurement Office
414	Water Chiller Facility and Building	971	Office Trailer
451	Support Building	986	Office Trailer
452	Safety and Emergency Services Building		

Figure 2.4-1. WIPP Surface Structures (continued)

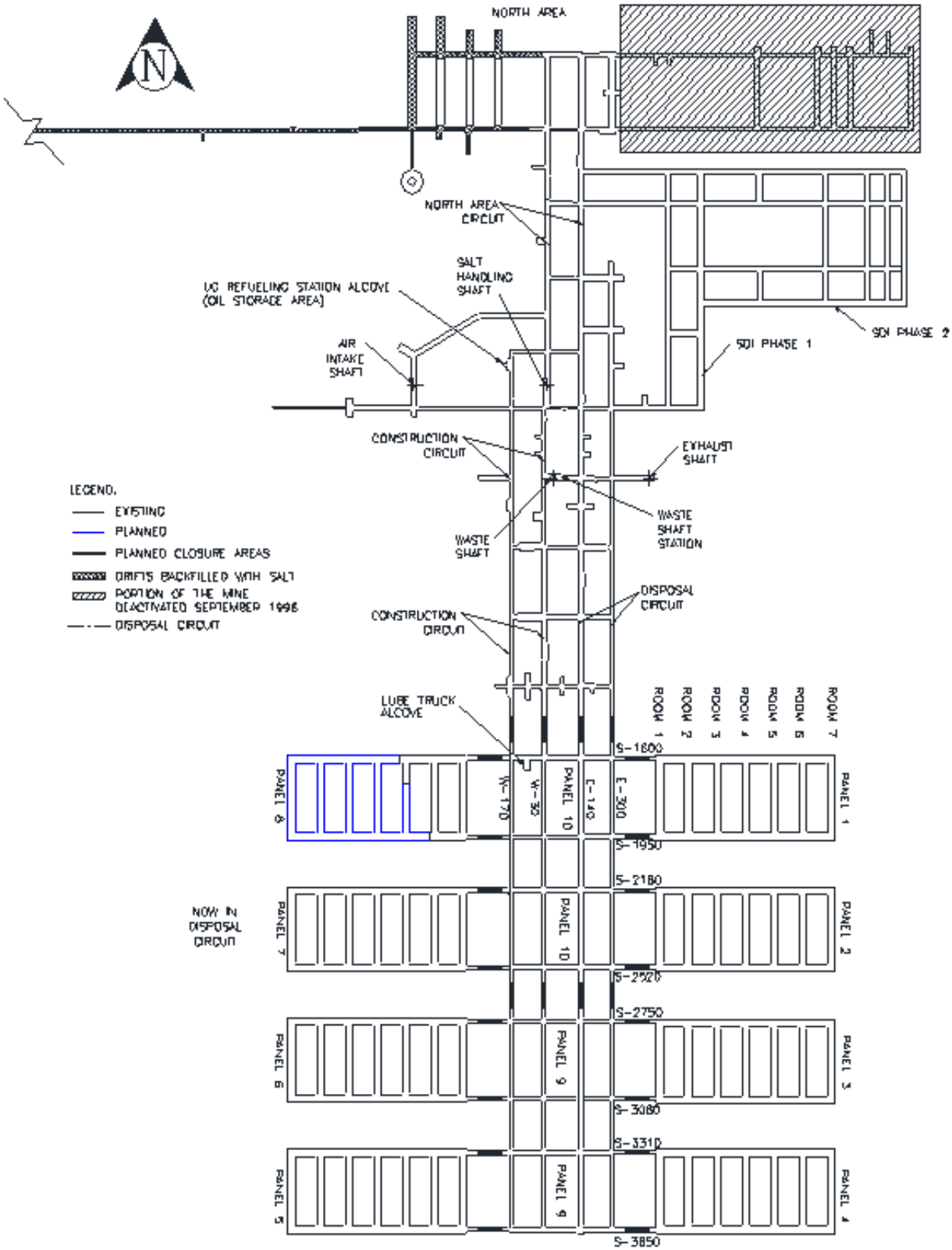

Figure 2.4-2. Underground Facilities

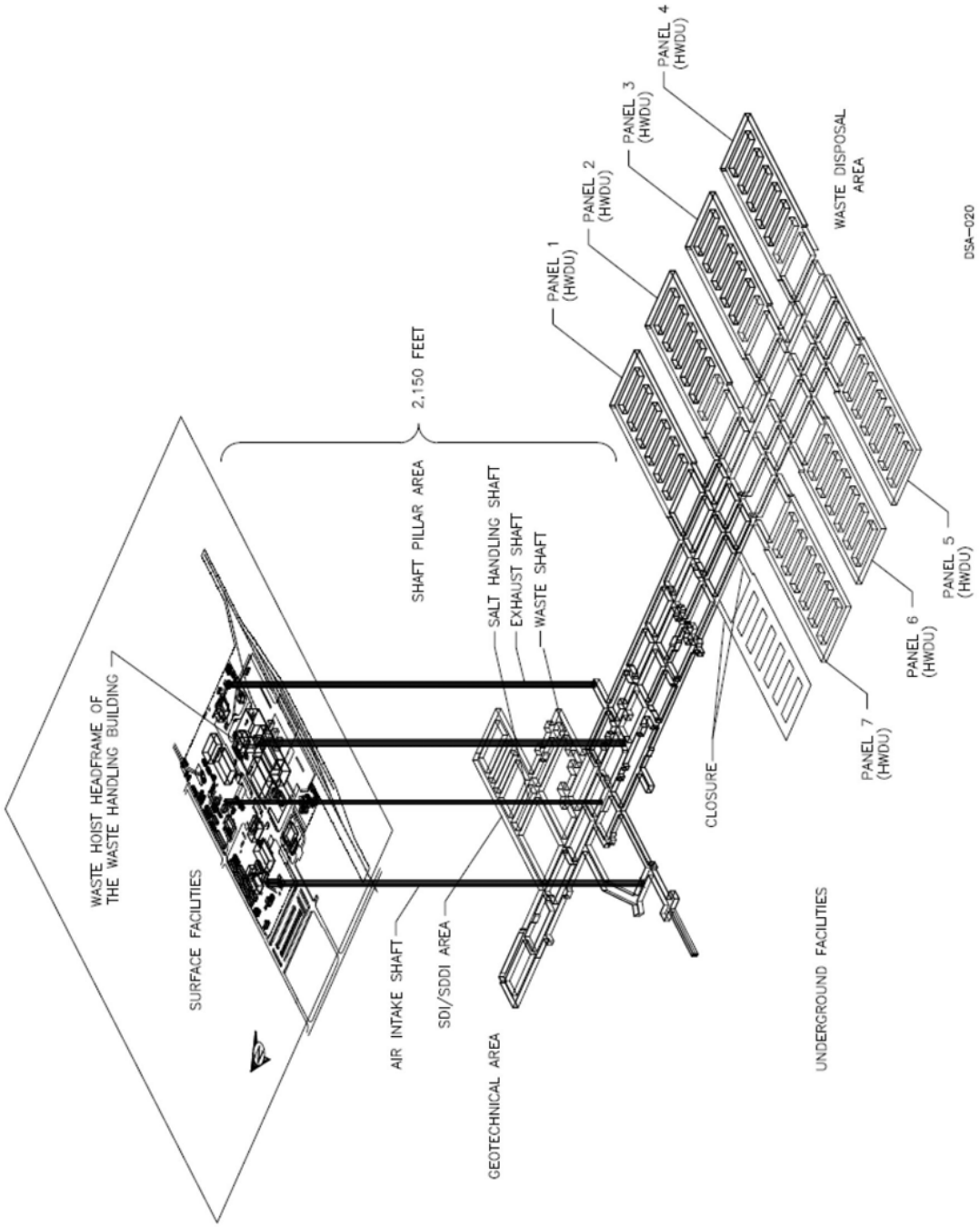

Figure 2.4-3. Spatial View of the WIPP Underground Facilities

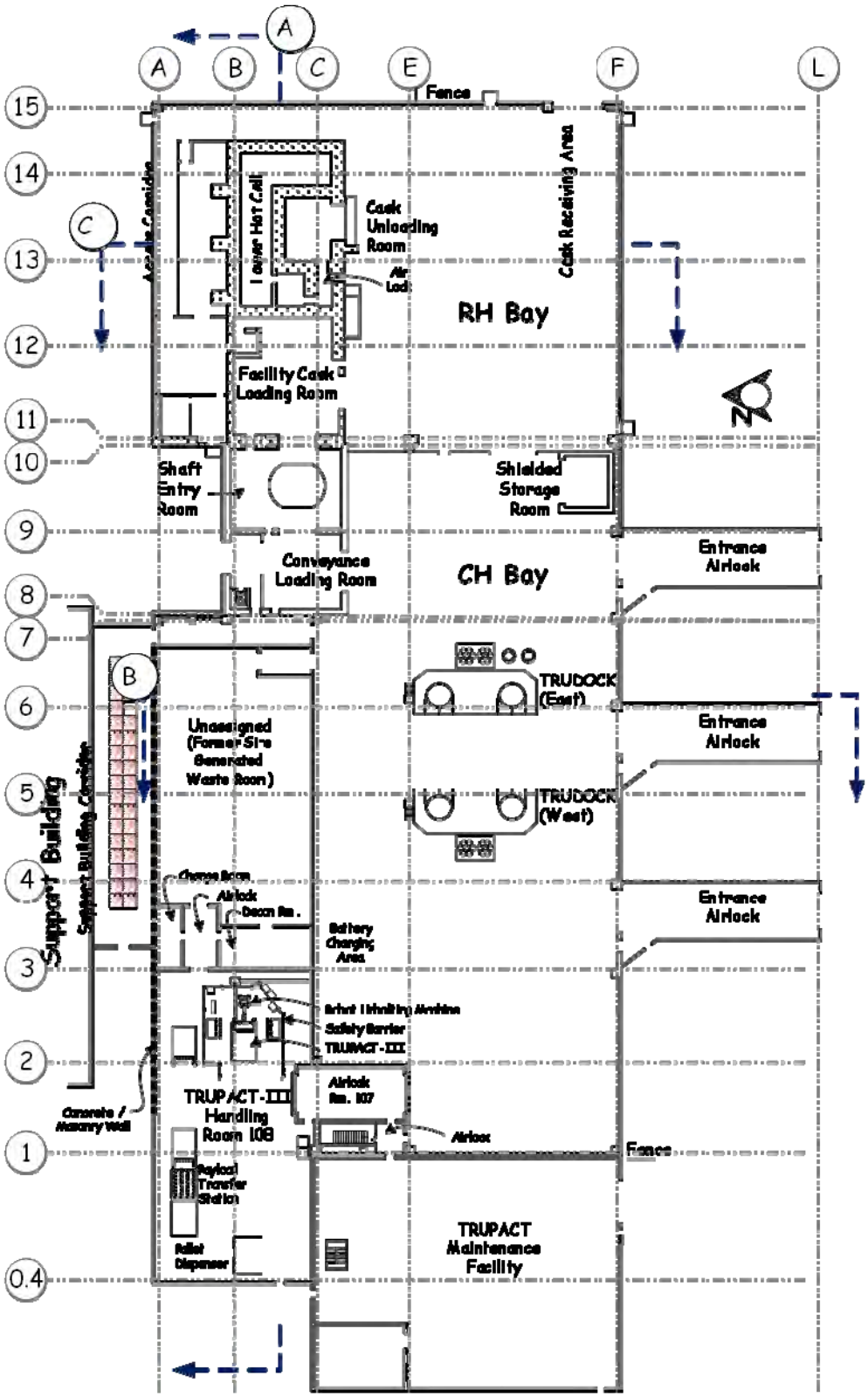

Figure 2.4-4. Waste Handling Building Plan (Ground Floor)

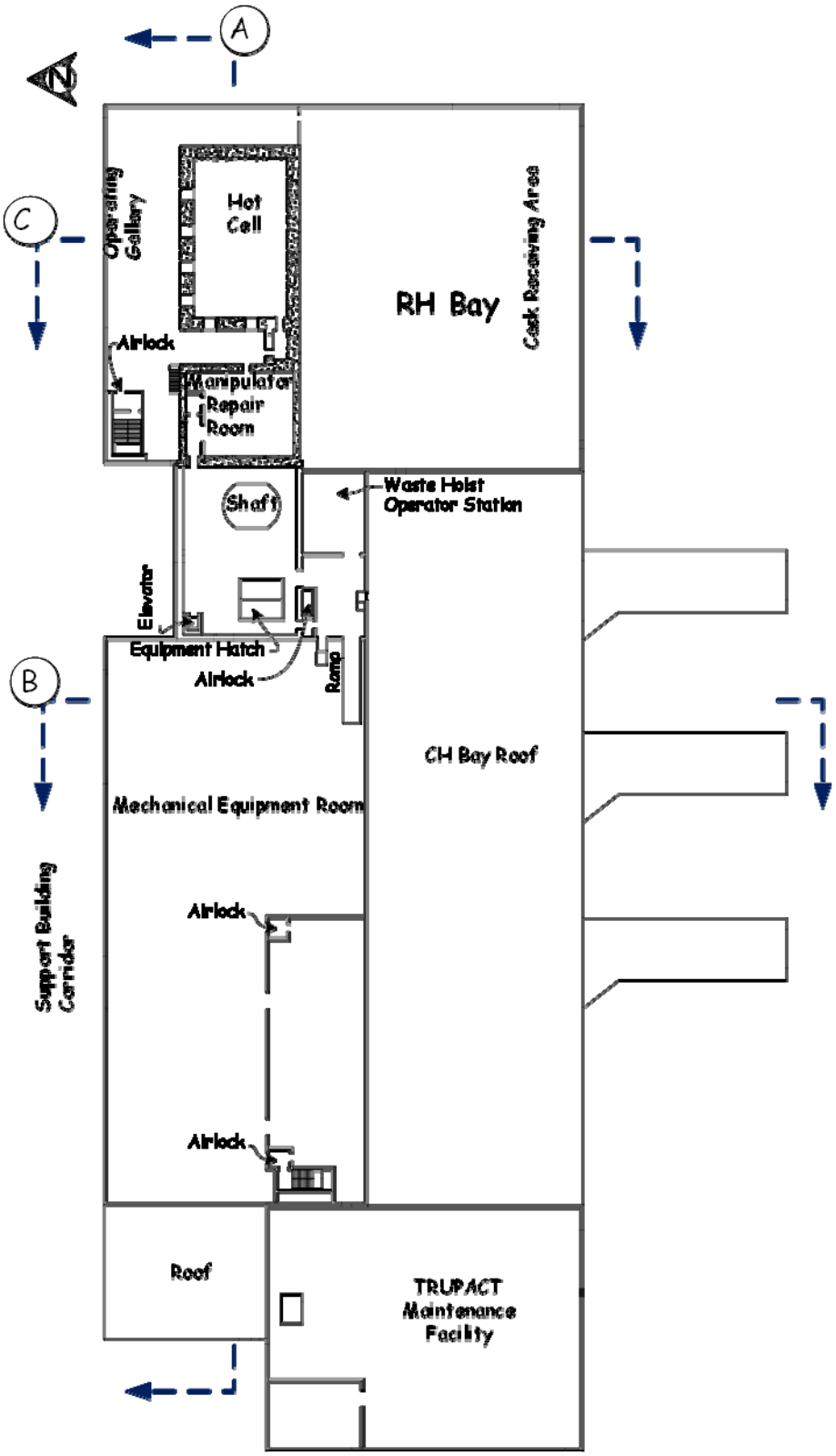

Figure 2.4-5. Waste Handling Building Plan (Upper Floor)

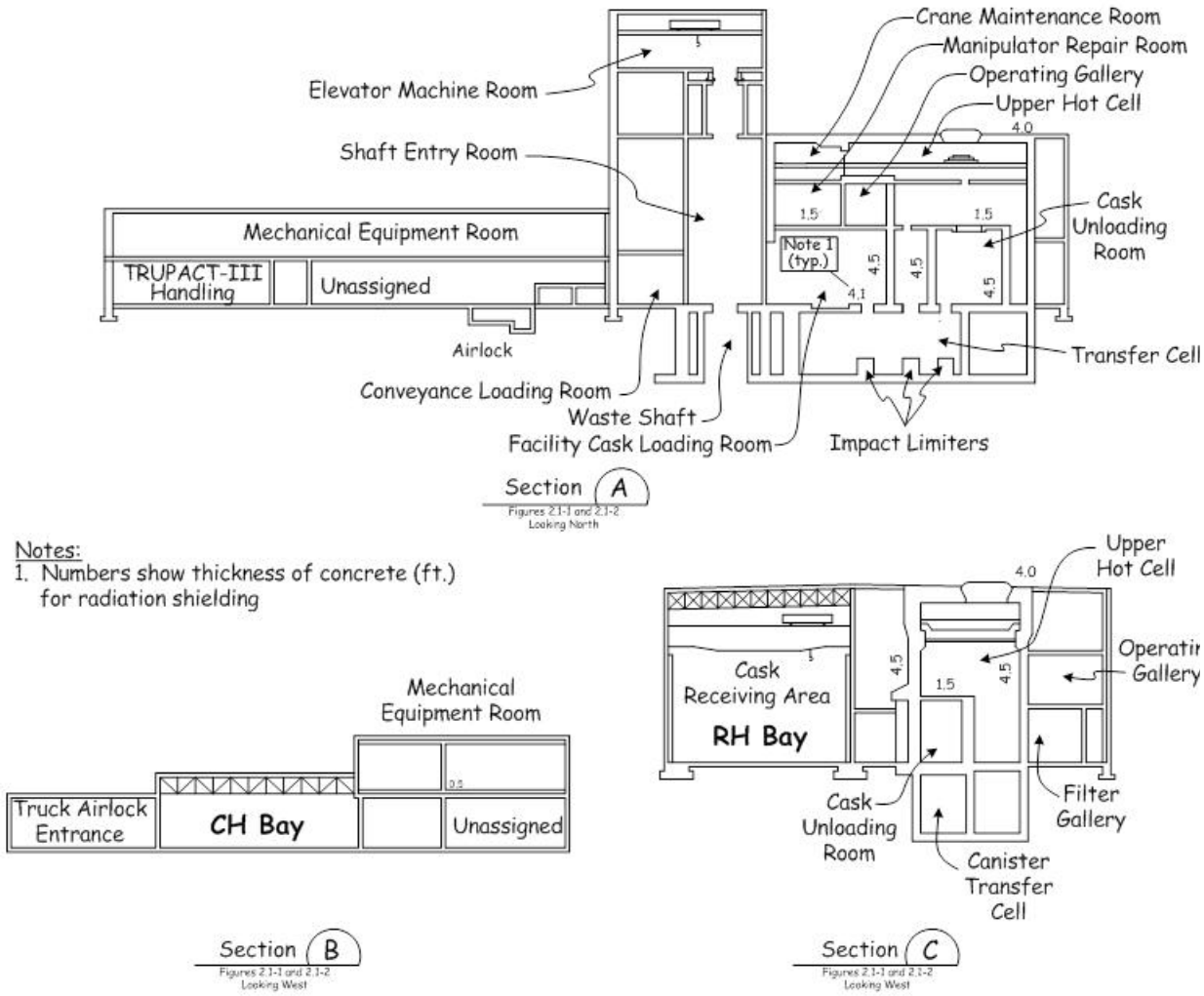

Figure 2.4-6. Waste Handling Building (Sections)

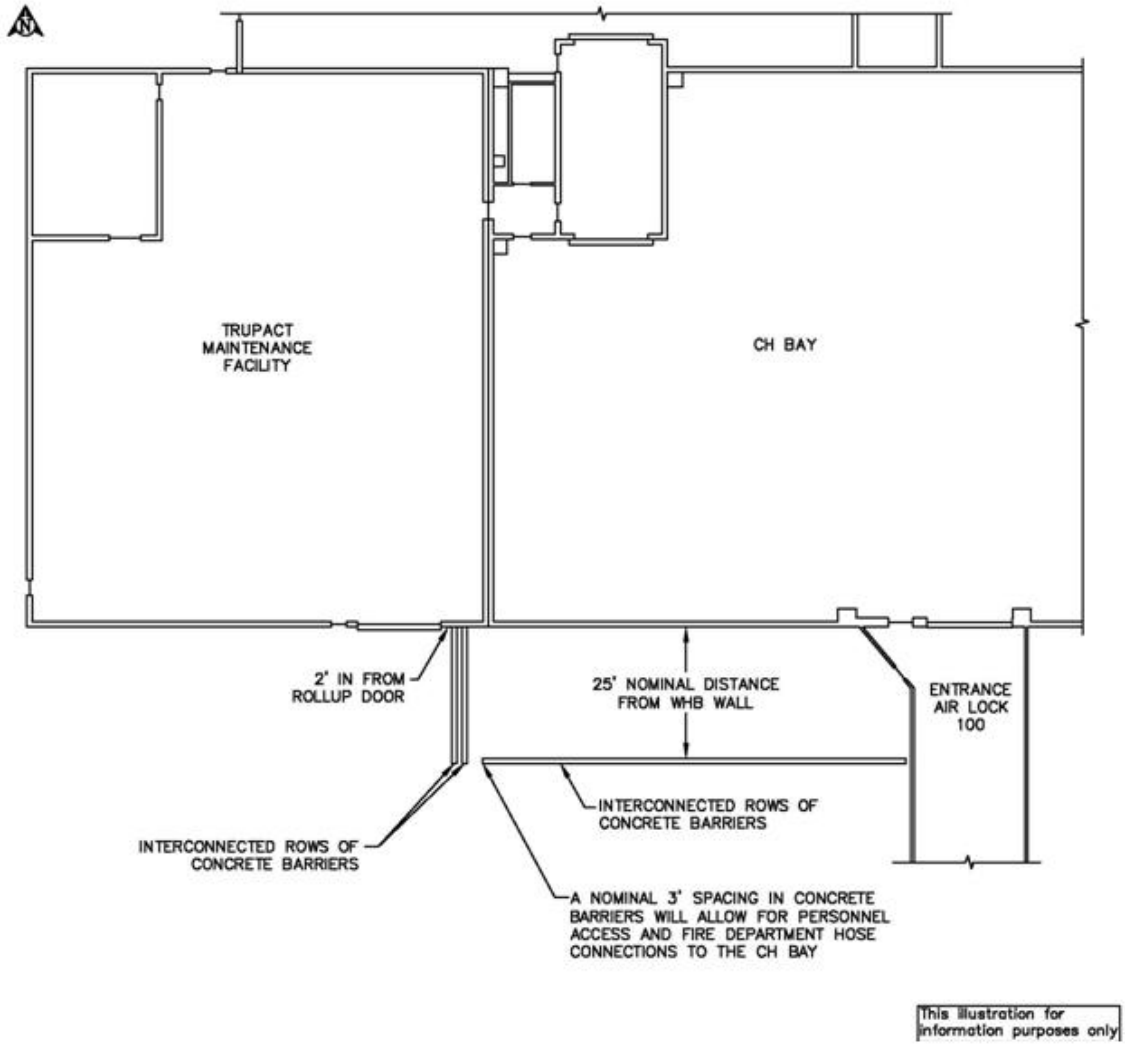

Figure 2.4-7. Waste Handling Building South Wall Vehicle Barrier Configuration

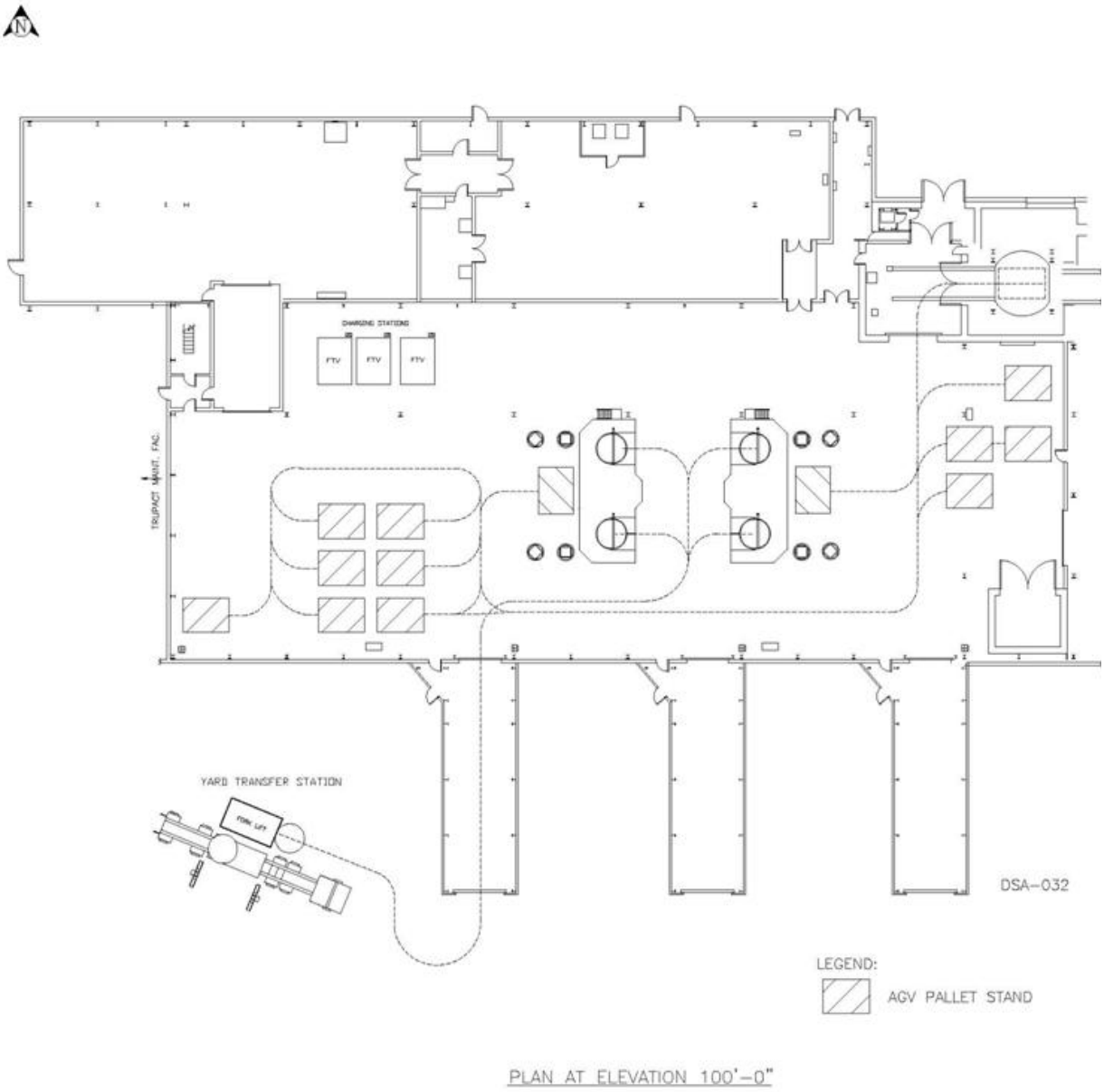

Figure 2.4-8. Contact-Handled Waste Transport Routes in the Waste Handling Building

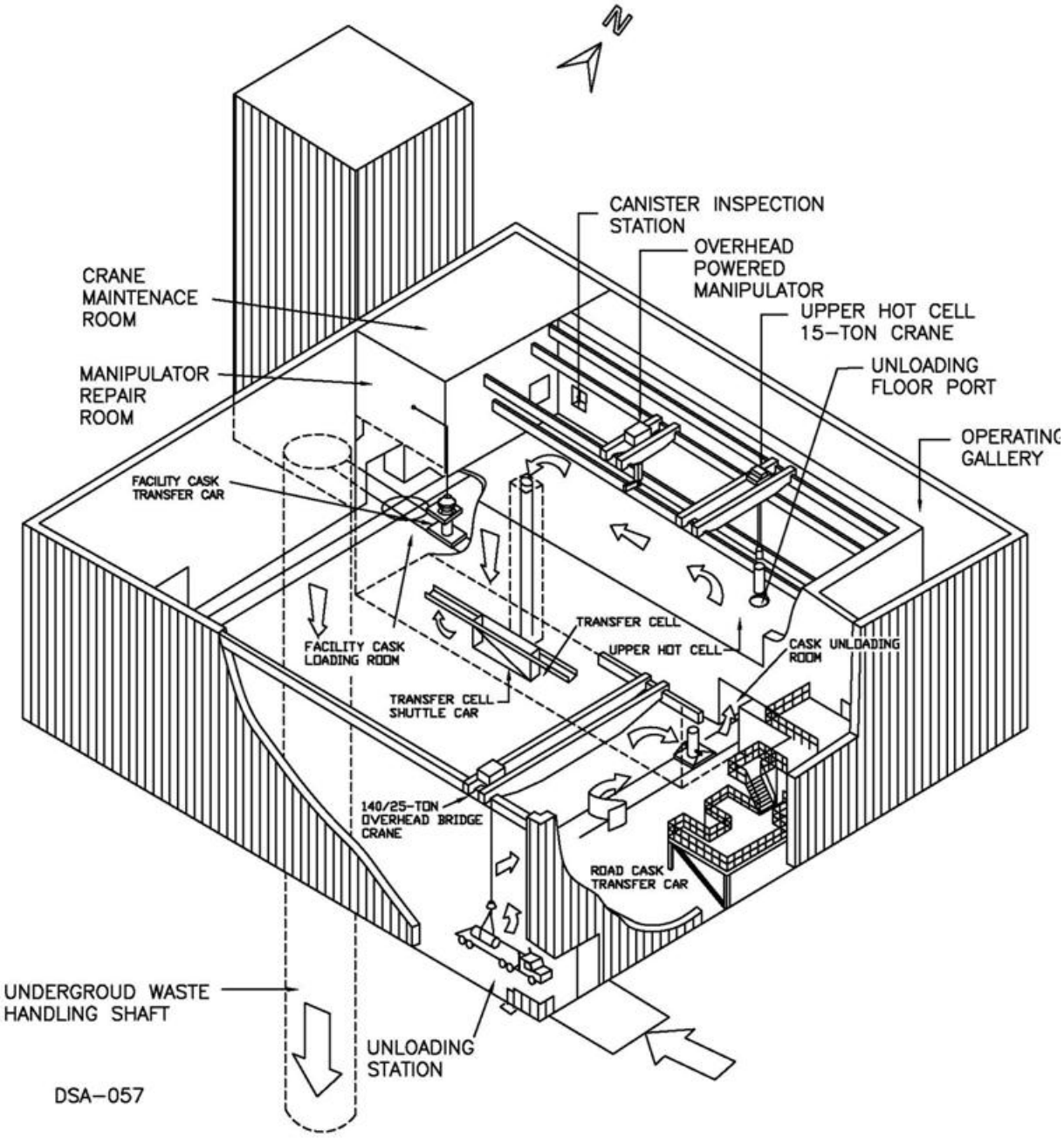

Figure 2.4-9. Pictorial View of the Remote-Handled Surface Facilities and Flow of 10-160B Process

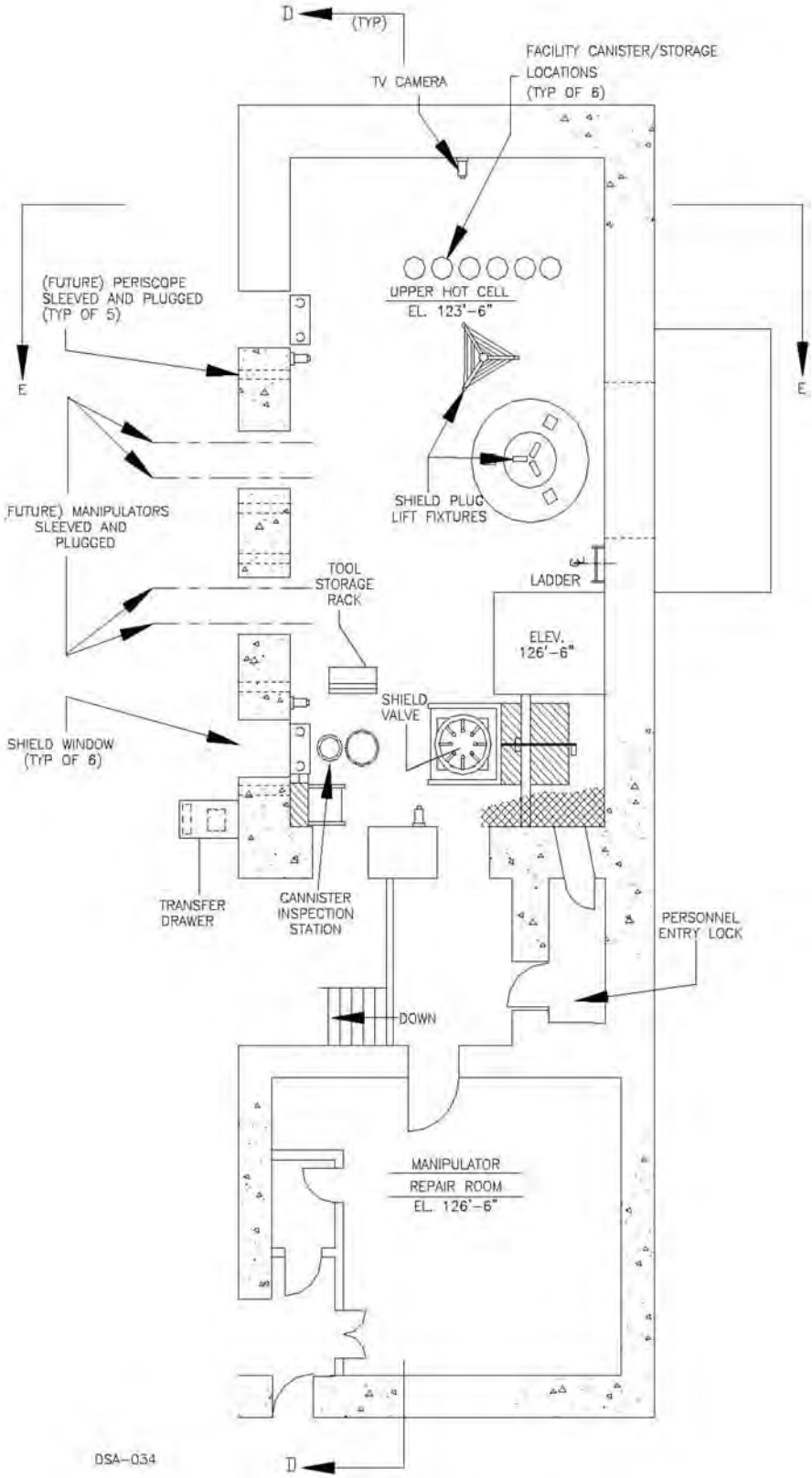

Figure 2.4-10. Details of Upper Hot Cell

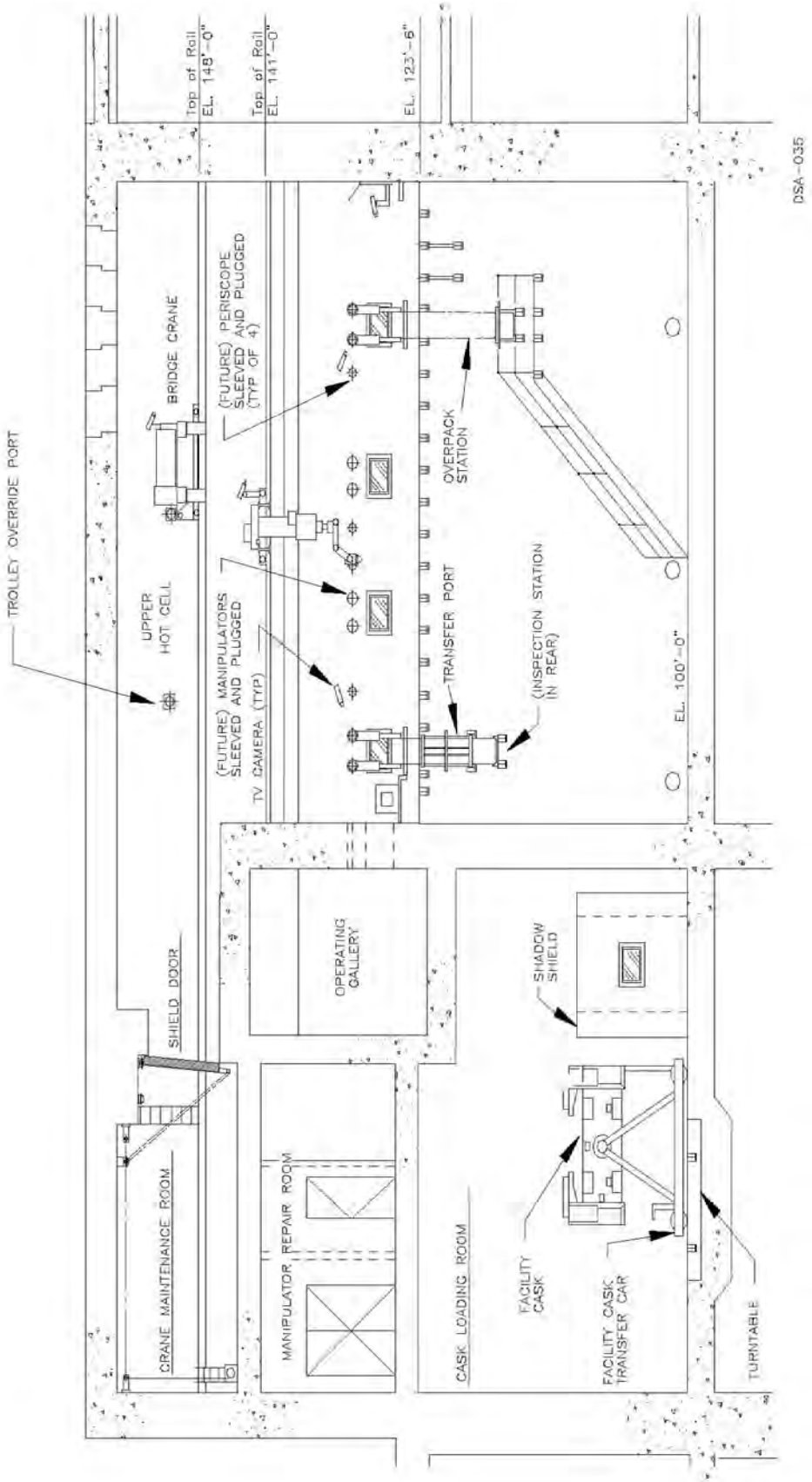

Figure 2.4-11. Details of Upper Hot Cell Complex at Cross Section D-D

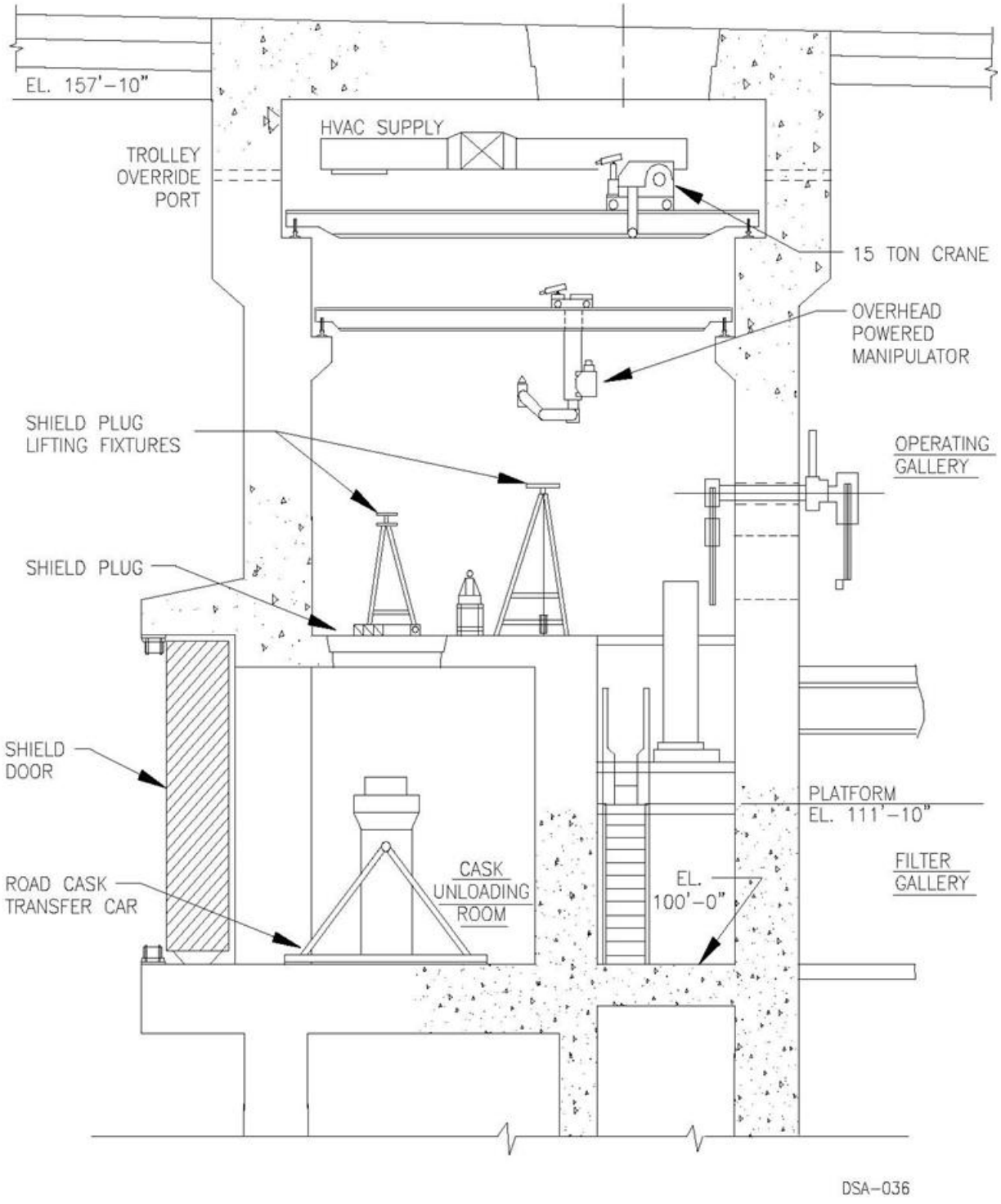

Figure 2.4-12. Details of Upper Hot Cell Complex at Cross Section E-E

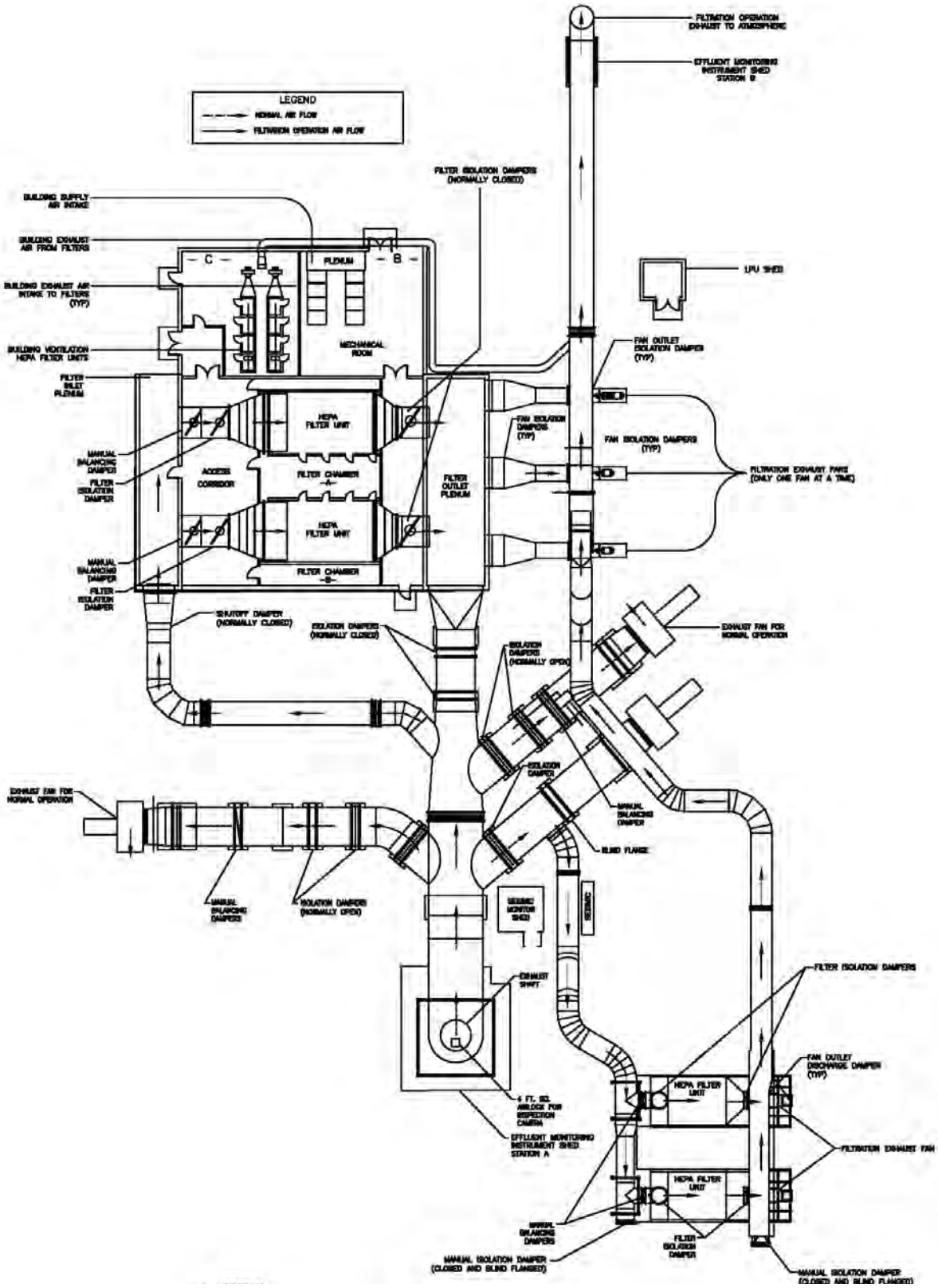

Figure 2.4-13. Exhaust Filter Building

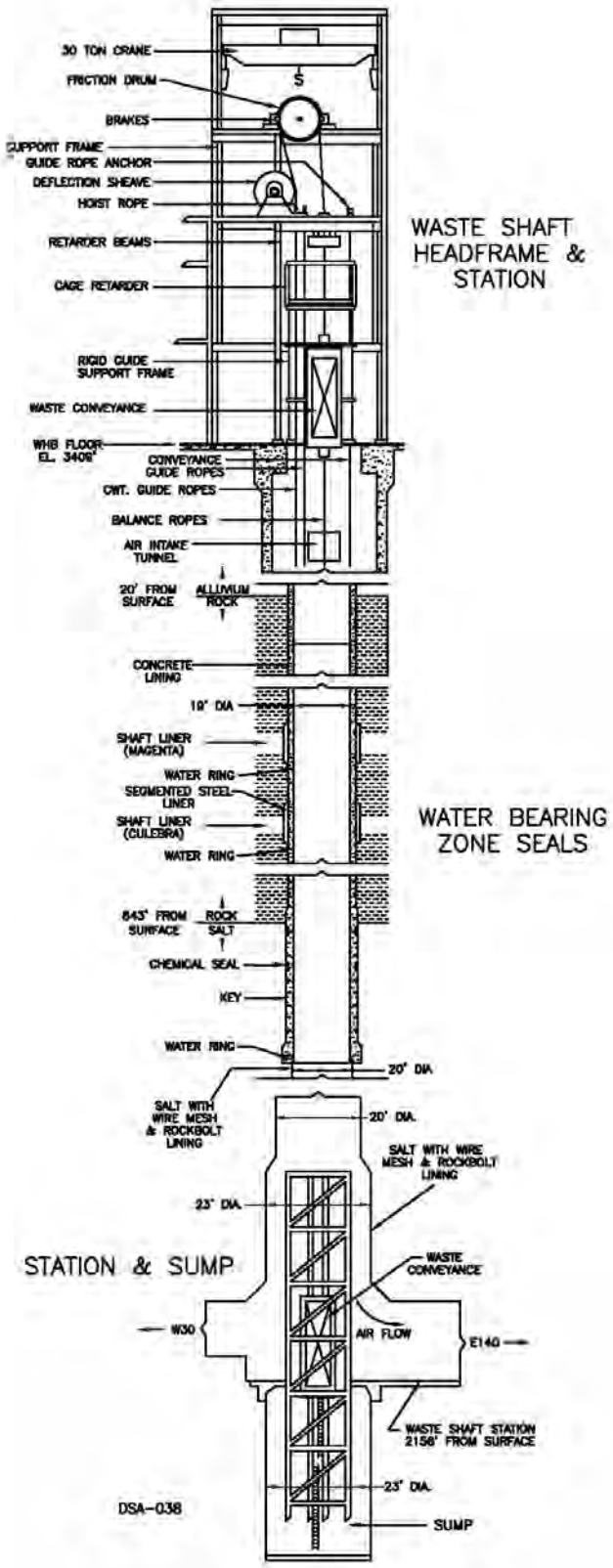

Figure 2.4-14. Waste Shaft, Hoist, and Conveyance Arrangement

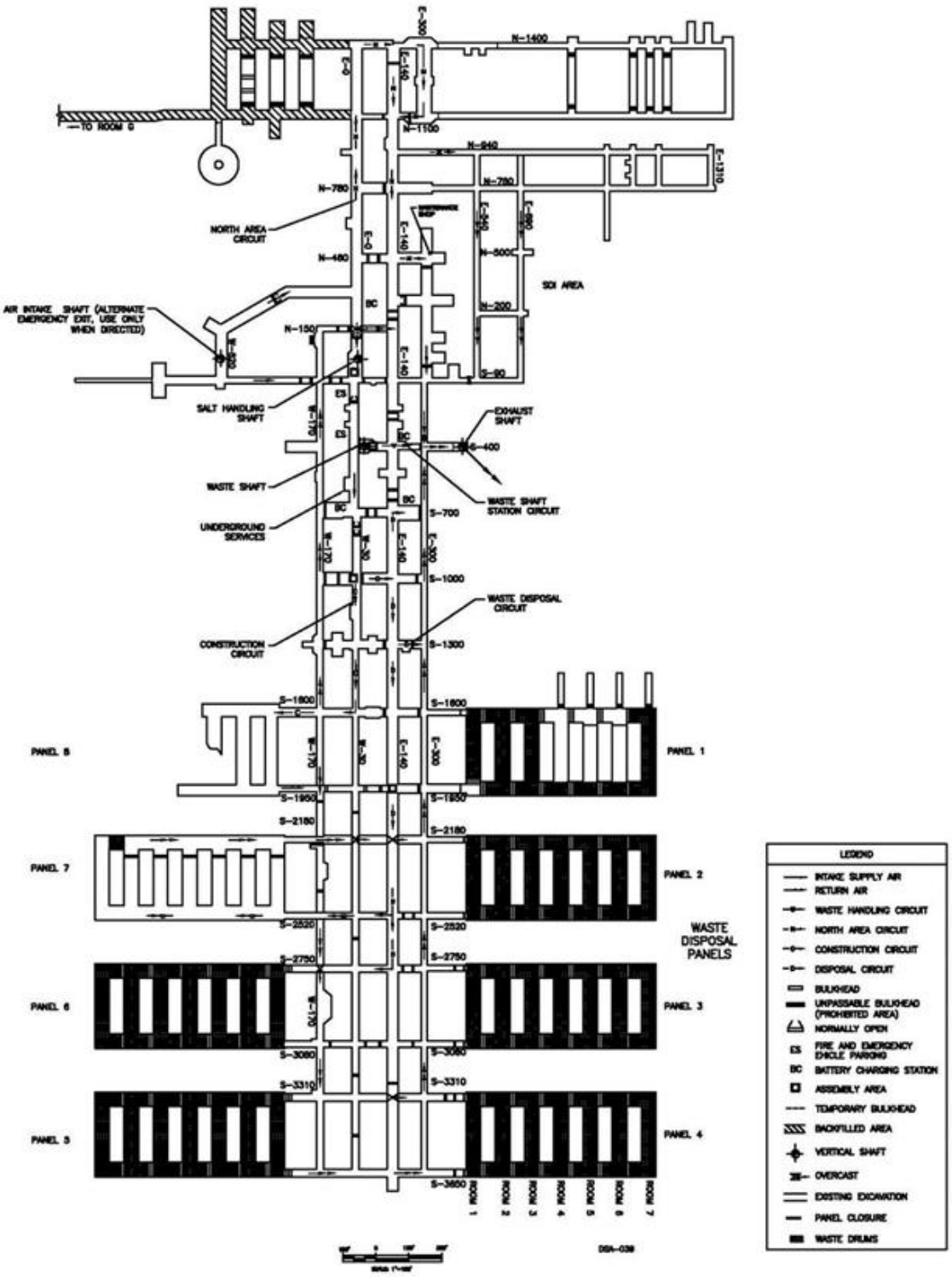

Figure 2.4-15. Underground Layout and Ventilation Flow

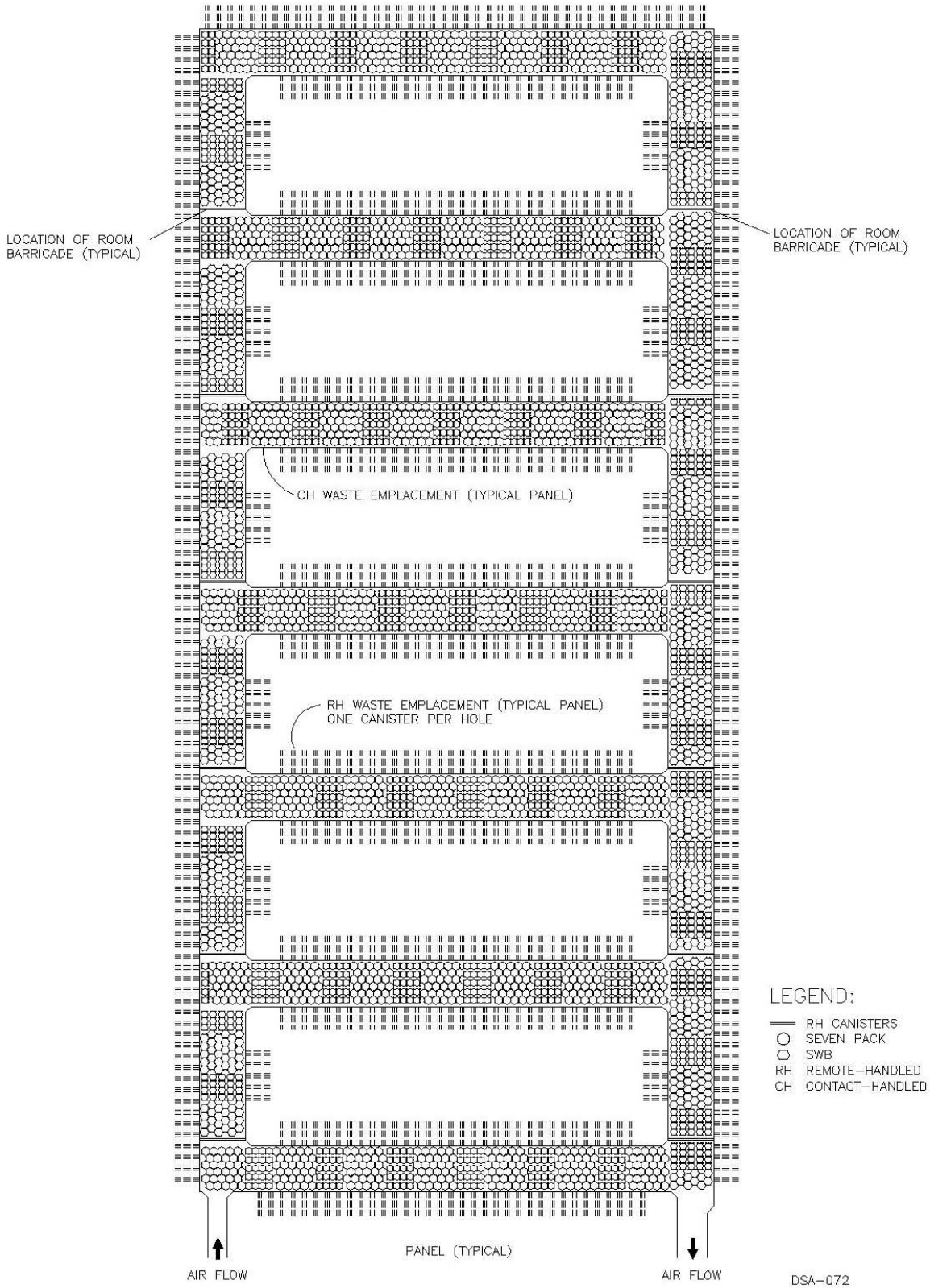

Figure 2.4-16. Typical Waste Disposal Configuration

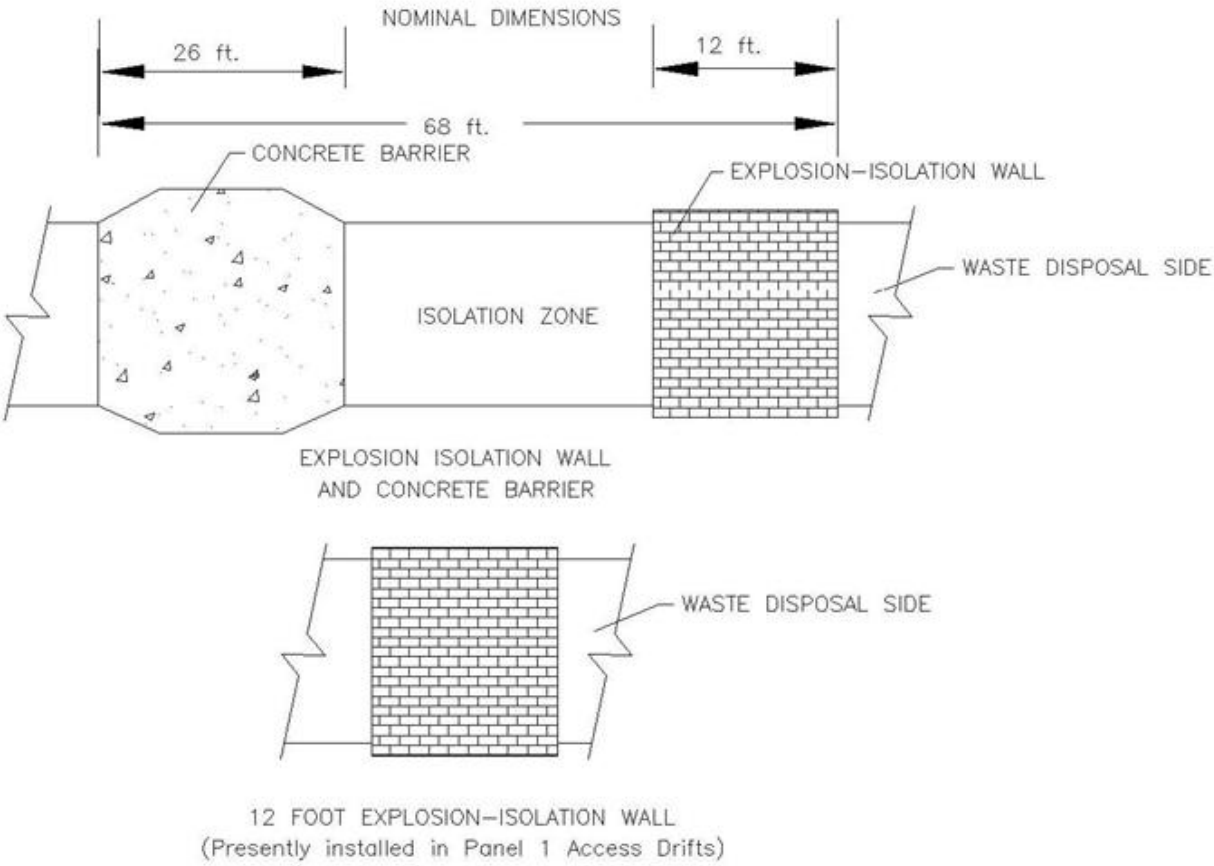

Figure 2.4-17. Panel Closure System

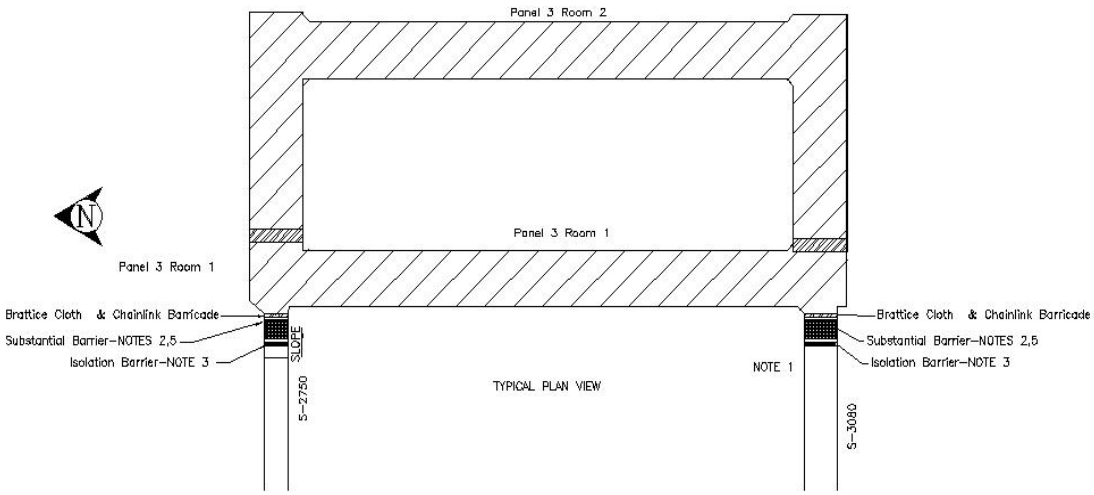

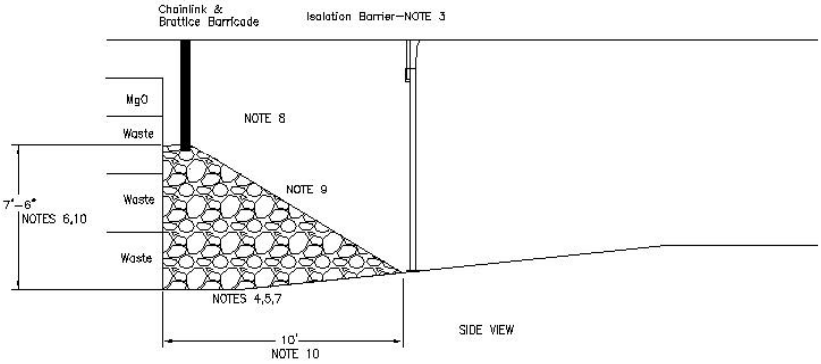

NOTES

1. A SUBSTANTIAL BARRIER AND ISOLATION BULKHEAD INSTALLATION WILL BE INSTALLED IN THE INTAKE AND EXHAUST DRIFTS OF THE PANEL. THE EXACT CONFIGURATION OF THE INSTALLATION WILL BE DEPENDENT ON THE AS–FOUND CONDITIONS OF THE DRIFTS.
2. CONFIGURATION AND PLACEMENT OF THE SUBSTANTIAL BARRIER WILL BE DICTATED BY FIELD CONDITIONS.
3. TYPICAL ISOLATION BULKHEAD IS DEPICTED ON FIGURE B.
4. AMOUNT AND HEIGHT OF THE SUBSTANTIAL BARRIER WILL BE DETERMINED BY THE COGNIZANT ENGINEER, BASED ON FIELD CONDITIONS.
5. SUBSTANTIAL BARRIER MATERIAL WILL CONSIST OF RUN–OF–MINE SALT OR OTHER SUITABLE NON–FLAMMABLE MATERIAL AS DESIGNATED BY THE COGNIZANT ENGINEER.
6. THE HEIGHT OF THE SUBSTANTIAL BARRIER NEAR THE WASTE WILL BE AT LEAST EQUAL TO THE HEIGHT OF THE BOTTOM OF THE TOP ROW OF WASTE.
7. SUBSTANTIAL BARRIER MATERIAL SHOULD BE AGAINST THE WASTE FACE.
8. ANCHOR CHAIN LINK AND BRATTICE BARRIER IN THE SUBSTANTIAL BARRIER AS DETERMINED BY THE COGNIZANT ENGINEER.
9. SLOPE TO SUIT. COMPACT AS DETERMINED BY THE COGNIZANT ENGINEER.
10. DIMENSIONS INDICATED FOR THE HEIGHT AND LENGTH OF THE SUBSTANTIAL BARRIERS ARE MINIMUMS. THE HEIGHT OF THE SUBSTANTIAL BARRIER IS MEASURED AT THE WASTE FACE. THE LENGTH OF THE SUBSTANTIAL BARRIER IS MEASURED FROM THE BOTTOM OF THE WASTE FACE TO THE TOE OF THE SUBSTANTIAL BARRIER MATERIAL.

DSA–022

Figure 2.4-18. Substantial Barrier and Isolation Bulkhead

2.5 REMOTE-HANDLED WASTE HANDLING EQUIPMENT AND PROCESS DESCRIPTION

The RH TRU process is not being authorized under Revision 5a of the DSA as this activity will not be implemented as part of CH waste emplacement restart. While the RH process has been included in the hazard analysis and consequence calculations, together with partial descriptions in various sections of the DSA, the RH process did not drive any of the required safety significant controls. Future authorization of the RH TRU process will require revalidation of the RH analysis and must include a resolution for the vulnerabilities of the RH crane in a seismic event and other comments on the RH hazard evaluations.

This section describes the WIPP RH Waste Handling equipment and process, which begins at the gate of the WIPP facility where RH Waste arrives by truck (Figure 2.5-1). Two types of trailers may be used to ship the RH-TRU 72-B shipping package: one where the package is rotated from horizontal to vertical using an overhead crane and one that uses hydraulics to rotate the RH-TRU 72-B shipping package. The 10-160B shipping package did not require rotation to remove it from its trailer. Either type of trailer is positioned in the RH Bay of the WHB using a trailer jockey or the transport tractor. Specific details of acceptable quantities and forms are provided in the WIPP WAC and the HWFP. Diagrams of the RH Waste Handling processes are shown in Figure 2.5-2 and Figure 2.5-3.

2.5.1 Remote-Handled Waste Shipping Packages

2.5.1.1 Remote-Handled Transuranic 72-B Shipping Package

The RH-TRU 72-B shipping package is a stainless-steel, lead-shielded package designed to provide double containment for shipment of TRU Waste materials (Figure 2.5-4). The packaging consists of a cylindrical stainless-steel and lead package body, a separate inner stainless-steel vessel, and foam-filled impact limiters at each end of the package body. The shipping package is designed to safely transport a single RH Waste Canister. The three types of RH Waste Canisters are the RH-TRU 72-B (fixed-lid and removable lid canisters), the NS15, Neutron Shielded Canister, and the NS30, Neutron Shielded Canister. The maximum payload weight is 8,000 pounds.

The RH-TRU 72-B shipping package body consists of a 1.5-inch-thick, 41.1-inch outer diameter stainless-steel outer shell, and a 1.0-inch-thick, 32.4-inch inside diameter stainless-steel inner shell, with 1.9 inches of lead shielding between the two shells. A 5-inch-thick bottom forging is welded to the outer package. The outer package is closed by a 6-inch-thick stainless-steel lid with 18 evenly spaced 1.25-inch-diameter bolts. The main closure lid has a double-bore-type O-ring seal. The containment seal is the inner butyl O-ring seal, which is leak testable. The outer package lid has a seal test port and a vent/sampling port sealed with butyl O-rings. The approximately 27,900-pound outer package provides a containment boundary for the payload and acts as an environmental barrier. The lead shielding ensures the surface radiation levels are below DOT limits.

The separate inner vessel is constructed of a 1.5-inch-thick bottom forging welded to a 0.4-inch-thick, 32-inch outside diameter shell. The 6.5-inch inner vessel lid is secured by eight evenly spaced 7/8-inch-diameter bolts and has three test ports, one of which is designated as the vent/sampling port. The inner vessel cavity has a minimum diameter of 26.5 inches and is 121.5 inches long. The approximately 4,000-pound inner vessel provides a containment boundary for the RH Waste Canister.

The RH-TRU 72-B shipping package is certified by the NRC in accordance with “Special Requirement for Plutonium Shipments” (10 CFR 71.63) and *RH-TRU 72-B Certificate of Compliance* (NRC 2011). The general shipping package arrangement, shown in Figure 2.5-4, includes impact limiters, weighing

approximately 2,500 pounds each, at each end of the shipping package that function to provide protection of the seal areas during the hypothetical transport accident events. Each impact limiter is constructed of polyurethane foam-filled stainless steel attached to the outer container with six evenly spaced 1.25-inch-diameter bolts. The maximum gross weight of an RH-TRU 72-B shipping package with impact limiters and a fully loaded RH Waste Canister is 45,000 pounds.

The impact limiters are provided with lifting lugs, allowing the use of rigging for handling. Both of the shipping package lids have bayonet sockets in the outside center for insertion of lifting fixtures. Both lids are also provided with threaded holes for insertion of lifting bolts or eyes. The shipping package has two transport trunnions, used for support during transport and as a mounting point for the RH-TRU 72-B RCTC. It also has four handling trunnions, located 90 degrees apart at the lid end, used for lifting in the RH Bay and CUR. There are two trunnions located at the opposite end used for rotating the package from the horizontal to the vertical position.

2.5.1.2 10-160B Shipping Package

The 10-160B shipping package is a steel, lead-shielded package designed to provide single containment for shipment of 55-gallon drums of RH Waste. The packaging consists of a cylindrical carbon-steel and lead body with an impact limiter at each end. The 10-160B is designed to safely transport ten 55-gallon drums of RH Waste in two-stacked drum carriage units holding five drums each. The maximum payload weight is 14,500 pounds.

The package body consists of a 2.0-inch-thick, 78.5-inch outer diameter carbon-steel outer shell, and a 1.1-inch-thick, 68-inch inside diameter carbon-steel inner shell, with 1.9 inches of lead shielding between the two shells. A 5.5-inch-thick flat circular steel bottom plate is welded to the inner and outer shells. The lead shielding ensures that the surface radiation levels are below DOT limits. The internal cavity has a diameter of 68 inches and is 77 inches high. The overall length of the package without impact limiters is 88 inches. An 11-gauge stainless-steel thermal shield surrounds the package outer shell in the region between the impact limiters. The container is closed by a 5,300-pound, 5.5-inch-thick steel primary lid that is attached to the package with 24 evenly spaced 1.75-inch-diameter bolts. The lid closure is made in a stepped configuration to eliminate radiation streaming at the lid/package body interface. A double O-ring provides the lid-to-package seal.

The primary lid has a 31-inch-diameter opening that is equipped with a secondary lid. The 2,150-pound, 5.5-inch-thick, 46-inch-diameter steel secondary lid is attached to the center of the primary lid with 12 evenly spaced 1.75-inch-diameter bolts. The secondary lid has multiple steps machined in its periphery that match those in the primary lid, eliminating radiation-streaming pathways, and is sealed to the primary lid by a double O-ring.

The 10-160B shipping package is certified by the NRC in accordance with 10 CFR 71.63 and *10-160B Certificate of Compliance* (NRC 2010). The 10-160B shipping package arrangement includes impact limiters at each end of the shipping package. The upper (lid end) impact limiter weighs 5,300 pounds and the lower weighs 5,200 pounds. Both impact limiters extend about 12 inches beyond the outside wall of the shipping package and are installed before transport. Each 102-inch outside diameter impact limiter is constructed of polyurethane foam-filled stainless steel. The impact limiters are secured to each other around the package by eight ratchet binders. The maximum gross weight of a loaded 10-160B shipping package with impact limiters is 72,000 pounds and its overall length is 130 inches. The impact limiters are provided with lifting lugs, allowing the use of rigging for handling. The 10-160B shipping package is equipped with four tie-down lugs welded to the outer shell, which also has two lifting lugs and two redundant lifting lugs, which are removed during transport and reinstalled for Waste Handling operations.

The secondary lid is equipped with three lifting lugs used to lift both lids. Both lids are covered by the top impact limiter and rain cover during transport.

2.5.2 Remote-Handled Waste Containers and Canisters

RH Waste Containers approved for disposal at the WIPP include 55-gallon drums shipped in a 10-160B shipping package and RH Waste Canisters inside an RH-TRU 72-B shipping package. The RH Waste Canisters and 55-gallon drums are equipped with filtered vents that allow aspiration, preventing internal pressurization of the container and minimizing the buildup of flammable gas concentrations, and preventing the escape of radioactive particulates.

2.5.2.1 Remote-Handled Waste Canister

The RH Waste Canister can be a fixed lid or a removable lid type. The fixed lid canister is a carbon- or stainless-steel single-shell container with an outside diameter of 26 inches, a wall thickness of 0.25 inch, an overall length of approximately 121 inches, weighs approximately 1,760 pounds empty, and has a maximum gross weight of 8,000 pounds (Figure 2.5-5). It has an inside diameter of approximately 25.5 inches with an inside length of approximately 108 inches. The dished head with an integral WIPP standard lift pintle is attached to the shell after the canister is filled with waste. The canister is vented using a suitable filter and can be direct loaded or loaded with three drums of radioactive waste, each with a vent filter. The removable lid canister has approximately the same dimensions, except it weighs approximately 1,100 pounds empty. The RH Waste Canister may have either a welded or a mechanically attached lid.

2.5.2.2 Neutron-shielded Waste Canisters

The neutron-shielded Waste Canister is an augmented RH-TRU 72-B Waste Canister and is available in two new configurations: NS15 and NS30. A neutron-shielded Waste Canister incorporates internal neutron shielding components that provide two levels of supplemental shielding for approximately 15- and 30-gallon inner containers (drums), respectively. The additional neutron shielding ensures that any surface level dose rates on the outer shipping package are below DOT transportation limits. The canisters are designed to be used for the shipment of specific TRU Waste forms in the RH-TRU 72-B shipping package. The RH-TRU 72-B shipping package accommodates one neutron-shielded Waste Canister.

The NS15 Waste Canister (Figure 2.5-6) is essentially identical to the NS30 with appropriate modification to accommodate a thicker neutron shielding insert (with minimum pipe thickness of 3.288 inches) and weighs approximately 2,070 pounds empty. The NS15 is designed to carry three 15-gallon steel payload drums with each drum and its contents weighing approximately 337 pounds.

The NS30 Waste Canister (Figure 2.5-7) is a removable-lid canister with a high-density polyethylene neutron-shielding insert with minimum pipe thickness of 1.412 inches. It is approximately 26 inches in diameter and approximately 120 inches tall, weighs approximately 1,660 pounds empty, and has a maximum gross weight of 3,100 pounds. It is designed to carry three 30-gallon steel payload drums with each drum and its contents weighing approximately 480 pounds.

2.5.3 Remote-Handled Waste Casks

There are two types of RH Waste Casks: the Facility Cask and the LWFC.

2.5.3.1 Shielded Insert

The shielded insert is specifically designed to be used in the Transfer Cell to hold and transport loaded facility canisters from the Upper Hot Cell until loaded into the RH Waste cask. The shielded insert, designed and constructed similar to the RH-TRU 72-B shipping package, has a 29-inch inside diameter and an inside length of 130.5 inches to accommodate the facility canister. The shielded insert is installed on and removed from the Transfer Cell Shuttle Car in the same manner as the RH-TRU 72-B shipping package.

2.5.3.2 Facility Cask

The Facility Cask (Figure 2.5-8) is a double end-loading shielded cask, weighing approximately 67,000 pounds empty and 75,000 pounds loaded (with a maximum weight Waste Canister of 8,000 pounds). The Facility Cask is approximately 165 inches long with an approximate height of 98 inches and consists of two concentric steel cylinders with the annulus between them filled with lead. The internal cylinder has a 30-inch diameter and a 0.50-inch wall thickness. The outer cylinder has an external diameter of 41.75 inches with a wall thickness of 0.625 inch. The lead annulus is 4.75 inches thick. The robustness of the Facility Cask serves to prevent any breach of the Waste Canister. The Facility Cask is designed such that it maintains its shielding integrity when dropped from a height of up to 102 inches The equivalent impact load is 1 g horizontal and 13 g vertical (SDD WH00, *Waste Handling System (WH00) System Design Description (SDD)*). The Facility Cask has two support trunnions located approximately mid-length at 180 degrees from each other. The trunnions are the support points of the FCTC. The Facility Cask has a motor-operated gate-type shield valve at each end used for loading and unloading RH Waste Canisters. Both shield valves are electrically operated with manual overrides and have spring-loaded pins that lock the valve gates closed. Compressed air is used to release the locking pins to permit the valves to be opened. The Facility Cask shield valves have approximately 9-inch-thick steel blocks and are designed to support the weight of a fully loaded RH Waste Canister when they are closed and the cask is vertical. The Facility Cask has two sets of forklift pockets; the lower set is used for transport and placement on the Horizontal Emplacement and Retrieval Equipment (HERE) or the Horizontal Emplacement Machine (HEM).

The Facility Cask is designed to provide shielding for an RH Waste Canister such that the cask surface dose rate is less than 200 mrem per hour when the Waste Canister surface dose rate is 7,000 rem per hour.

Both Facility Cask shield valves are equipped with limit switches to indicate locking pin position (retracted or inserted) and shield valve position (open or closed). Additional switches mounted in the face of each shield valve housing indicate when the shield bell is in contact with the top shield valve housing and when the telescoping port shield ring is in contact with the bottom shield valve housing.

2.5.3.3 Light-Weight Facility Cask

The LWFC (Figure 2.5-9) is a double end-loading shielded cask, weighing approximately 48,450 pounds empty and 56,450 pounds loaded (with a maximum weight RH Waste Canister of 8,000 pounds). The LWFC is approximately 165 inches long with an approximate height of 92 inches and consists of two concentric steel cylinders with the annulus between them filled with lead. The internal cylinder has a 30-inch diameter and a 0.50-inch wall thickness. The outer cylinder has an external diameter of 36.25 inches with a wall thickness of 0.625 inch. The lead annulus is 2.0 inches thick. The robustness of the LWFC serves to prevent any breach of the RH-TRU 72-B canister. The LWFC is designed such that it maintains its shielding integrity when dropped from a height of up to 102 inches. The equivalent impact load is 1 g horizontal and 13 g vertical (SDD WH00). The LWFC has two support trunnions located approximately mid-length at 180 degrees from each other. The trunnions are the support points of the

FCTC. The LWFC has a motor-operated gate-type shield valve at each end used for loading and unloading RH Waste Canisters. Both shield valves are electrically operated with manual overrides and have electrically actuated pins that lock the valve gates closed. The LWFC shield valves have approximately 8.5-inch-thick steel gates and are designed to support the weight of a fully loaded RH Waste Canister when they are closed and the cask is vertical. The LWFC has two sets of forklift pockets; the lower set is used for transport and placement on the HERE or the HEM, and the upper set is used for maintenance.

The LWFC is designed to provide shielding for an RH Waste Canister such that the LWFC surface dose rate is less than 200 mrem per hour when the Waste Canister surface dose rate is less than or equal to 100 rem per hour.

Both LWFC shield valves are equipped with limit switches to indicate locking pin position (retracted or inserted) and shield valve position (open or closed). Additional switches mounted in the face of each shield valve housing indicate when the shield bell is in contact with the top shield valve housing and when the telescoping port shield ring is in contact with the bottom shield valve housing.

2.5.4 Remote-Handled Waste Handling Equipment

2.5.4.1 Remote-Handled Bay Equipment

2.5.4.1.1 140/25-ton Overhead Bridge Crane

The 140-ton overhead bridge crane with a 25-ton auxiliary hoist is used for RH shipping container handling and maintenance operations. The overhead bridge crane is designed to stay on its rails, retaining control of the load, during a loss of power or DBE (SDD WH00). The crane is controlled from a radio-frequency handheld control box operated from the floor of the RH Bay. The 140-ton main hoist has a lifting height of 41 feet and the 25-ton auxiliary hoist has a lifting height of 42 feet.

2.5.4.1.2 Motorized Man Lifts

Motorized manlifts may be used to provide Waste Operations personnel elevated work platforms for access to the RH-TRU 72-B and 10-160B shipping packages while on the transport trailers. Waste Operations personnel may use the platforms to perform the initial Waste Handling activities of removing the impact limiters from the shipping packages and performing any work required for readying the shipping package for lifting from the trailer.

2.5.4.1.3 140/25-ton Crane Cask Lifting Yoke

The 140/25-ton crane cask lifting yoke is a lifting fixture that attaches to either hook of the 140/25-ton overhead bridge crane and is designed to lift and rotate the RH-TRU 72-B shipping package by engaging its handling trunnions. Figure 2.5-10 shows the 140/25-ton overhead bridge crane with the cask-lifting yoke lowering an RH-TRU 72-B shipping package onto the RH-TRU 72-B RCTC.

2.5.4.1.4 Remote-Handled Transuranic 72-B Road Cask Transfer Car

The RH-TRU 72-B RCTC is a rail-guided structural-steel car with two A-frame supports and a bottom-positioning fixture designed to hold the RH-TRU 72-B shipping container in the vertical position. The point of the A-frame is designed to cradle the transport trunnions of the shipping container (Figure 2.5-11), while the positioning fixture prevents the cask from moving.

The four-wheeled car, weighing approximately 3,500 pounds with a load capacity of 40,000 pounds, is designed to transport the RH-TRU 72-B shipping container from the transport trailer to the cask preparation station and then into the CUR. It also repeats the route in reverse for empty RH-TRU 72B shipping containers. Each of the two front wheels of the RH 72-B RCTC is powered by a variable speed drive electric motor via electrical cable. The RH-TRU 72-B RCTC rails are located in the east side of the RH Bay and start in the CUR and run south about 80 feet, ending near the fire water collection sump by the south wall of the RH Bay. Only one RCTC is operated on the rails at a time.

2.5.4.1.5 10-160B Road Cask Transfer Car

The 10-160B RCTC is a four-wheeled, self-propelled, rail-guided structural-steel car constructed similar to the RH-TRU 72-B RCTC without the A-frame structure. The 10-160B RCTC, weighing approximately 3,000 pounds with a load capacity of approximately 62,500 pounds, is designed to transport the 10-160B shipping package in the vertical position from the transport trailer to the cask preparation station and then to the CUR. Angled guides are bolted on top of the frame to center the beveled bottom of a 10-160B shipping package on the car and prevent any lateral cask movement. It also repeats the route in reverse for an empty 10-160B shipping package. Each of the two front wheels is powered by an electric motor.

2.5.4.1.6 Cask Preparation Station

The cask preparation station is a variable-height elevated work platform designed to provide accessibility to the RH-TRU 72-B shipping package lid area to allow workers to perform unloading preparations and shipment activities such as bolt detensioning/tensioning, package outer lid removal/installation, lid-lift fixture installation/removal, radiological surveys, inspections, and minor maintenance. The cask preparation station, which straddles the RCTC rails, has a work deck that is vertically adjustable from a height of approximately 72 inches to 168 inches above the RH Bay floor. The elevating deck is positioned by electrically operated screw jacks controlled from a pushbutton console.

2.5.4.1.7 10-160B Cask Lid-Lift Fixture

The 10-160B package lid-lift fixture has a pintle and three 1-inch ball locking pins (Figure 2.5-13). A ball locking pin is inserted into each of the lid-lifting lugs to attach the lift fixture to the 10-160B lid. When the 10-160B is in the CUR, the lid-lifting fixture pintle is engaged by a facility grapple connected to the Upper Hot Cell crane, and then the lid is lifted into the Upper Hot Cell. The 10-160B package lid-lift fixture is attached to the package lid.

2.5.4.1.8 Remote-Handled Transuranic 72-B Cask Outer Lid-Lift Fixture

The RH-TRU 72-B outer lid-lift fixture is typically used by the cask preparation station jib crane to remove the outer lid from the RH-TRU 72-B shipping package while it is in the vertical position. The bottom of the fixture is configured to engage the bayonet socket in the lid and rotate 60 degrees to engage the bayonet attachment. Two spring-loaded pins on the fixture are released to secure it in the outer cask lid. The pins prevent the inadvertent rotation of the fixture and disengagement of the bayonet attachment.

2.5.4.1.9 Remote-Handled Transuranic 72-B Cask Inner Lid-Lift Fixture

The pintle on the RH-TRU 72-B cask inner lid-lift tool interfaces with facility grapple lift fixtures. It allows remote removal of the inner lid while the cask is in the Transfer Cell. Operators place the fixture on the inner lid after the outer lid has been removed.

2.5.4.1.10 Remote-Handled Transuranic 72-B Cask Inner Lid Alignment Tool

The RH-TRU 72-B inner lid alignment tool consists of two parts that are installed at the cask preparation station. The arm is temporarily bolted in the inner lid. It fits in only one orientation and extends out to fit into the guide. The guide is temporarily bolted to the outer vessel after the arm is bolted to the lid. The location of the guide is determined by the location of the arm.

After the RH-TRU 72-B cask inner lid is removed in the Transfer Cell, it may rotate slightly before it is placed back on the cask. The two parts of the tool fit together to center and rotate the lid by the arm on the lid following the guide as the lid is lowered.

2.5.4.1.11 10-160B 55-Gallon Drum-Lift Device

A drum-lift device (Figure 2.5-13) is installed on each 55-gallon drum at the generator site. The drum-lift device is similar in construction to the drum lid bolt ring and is installed on the drum just below the first chine below the lid. The lift device has two diametrically opposed wire cable loops that are used to lift the drum from the carriage. When the wire cable loops are engaged by a lifting fixture, the symmetrical construction and placement of the drum-lift device allows the drum to be suspended, moved, and inserted into a Facility Canister.

2.5.4.2 Cask Unloading Room Equipment

2.5.4.2.1 25-ton Crane/Cask-lifting Yoke

The CUR 25-ton crane is fitted with a dedicated lifting yoke used to lift the RH-TRU 72-B from the RH-TRU 72-B RCTC, lower it through the open CUR floor shield valve, and set it in the shuttle car inside the Transfer Cell. The bridge rails of the CUR 25-ton crane are attached to the walls of the CUR. The crane is designed to stay on its rails, retaining control of its load, during a DBE. The cask-lifting yoke lifts the RH-TRU 72-B by engaging handling trunnions. The CUR 25-ton crane has a lifting height of 28 feet.

Load cells are located on each hoist cable to provide an indication of cable overload and/or load imbalance. In addition to protecting the crane and cask-lifting yoke from damage, the load cells are used to prevent the inadvertent decoupling of the cask-lifting yoke from the container-lifting trunnions.

The control console for the CUR crane is located in the CUR and contains a monitor for viewing Transfer Cell operations.

2.5.4.2.2 Cask Unloading Room Floor Shield Valve

The CUR floor shield valve has a valve body of carbon-steel plate approximately 6.5 inches thick, 68 inches wide, and 67.5 inches long. It is supported on four rollers that ride on two floor-mounted flat tracks. Four guide rollers mounted in the bottom of the shield keep the shield in line. The shield is positioned by a motor-driven ball screw actuator mounted such that the shield valve body rolls under the actuator as it moves from the closed to open position. The CUR shield valve is normally maintained in the closed position. The motor actuator includes a brake and limit switch for valve position indication and control. The CUR shield valve body weighs approximately 8,500 pounds. The CUR floor shield valve provides shielding and separates the CUR and the Transfer Cell. When lowering a RH-TRU 72-B shipping container into the Transfer Cell, air pressure in the CUR is maintained higher than in the Transfer Cell. The CUR floor shield valve is interlocked to other RH Waste Handling components as follows:

- The CUR floor shield valve cannot be closed unless the CUR 25-ton crane hook is in the high limit position.
- Access to the CUR shield valve control panel is prevented by the closed CUR shield door when the Upper Hot Cell shield plugs are removed. The Upper Hot Cell shield plugs cannot be removed while the CUR shield valve or the CUR shield door is open.
- The CUR floor shield valve cannot be opened unless the Upper Hot Cell shield valve and the Transfer Cell ceiling shield valve are closed.
- The CUR floor shield valve cannot be opened unless the Transfer Cell Shuttle Car is positioned under the shield valve and the CUR crane is positioned over the shield valve.

2.5.4.3 Upper Hot Cell Equipment

The Upper Hot Cell Equipment is required for 10-160B processing.

2.5.4.3.1 Upper Hot Cell Crane

The bridge of the remote-operated overhead Upper Hot Cell crane has a 32-foot span and can travel about 96 feet in an east–west direction at a speed of up to approximately 16 fpm. The bridge speed control is designed to slow its travel speed to a maximum of 8 fpm when the bridge is approximately 10 feet from the west wall. The Upper Hot Cell crane bridge carries a trolley, load rated at 15 tons, which can move in a north–south direction approximately 24 feet at a speed of up to approximately 15 fpm. The trolley speed control is designed to slow its travel speed to a maximum of 8 fpm when the trolley is approximately 10 feet from the north wall. (The north and west walls of the Upper Hot Cell contain the Upper Hot Cell Operating Gallery viewing windows, and the speed control is provided to minimize the consequences of a load being carried by the Upper Hot Cell crane impacting the windows.) The trolley carries a hoist that supports a grapple rotating block and the Upper Hot Cell facility grapple. A hook can be attached to the Upper Hot Cell facility grapple to handle loads including loaded or empty 10-160B drum pallet/carriage units, and 55-gallon drums of RH Waste. The hoist has a lifting height of 64 feet. The crane is designed to stay on its tracks, and to hold its load in place, in the event of a DBE or electrical failure (SDD WH00).

If the Upper Hot Cell crane requires maintenance, it can be moved into the Crane Maintenance Room. In the event the crane becomes inoperable while moving a load, an electric override system for the crane and grapple are used to safely lower and release the load and then raise the grapple to a position that will allow the crane bridge sweep winch to position the crane inside the Crane Maintenance Room.

The operator control console, located in the Operating Gallery, is hand held to allow the operator to select the optimum Upper Hot Cell viewing window location to visually observe the crane operation.

2.5.4.3.2 Upper Hot Cell Facility Grapple Rotating Block Assembly

The Upper Hot Cell facility grapple rotating block assembly is a fabricated steel housing consisting of four sheaves at the top and a gear drive connected to a clevis at the bottom. The grapple rotating block is suspended from the Upper Hot Cell crane by cables passing through the sheaves. The gear drive has a motor-driven pinion that rotates the clevis yoke that normally supports a facility grapple.

2.5.4.3.3 Upper Hot Cell Facility Grapple

The Upper Hot Cell facility grapple (Figure 2.5-12) is a special lift fixture designed to engage a standard WIPP pintle and has a lift capacity of 21,000 pounds. The facility grapple has an axially mounted,

electrically operated actuator that rotates a drive gear that drives three lifting lugs into or out of engagement under the WIPP pintle. In the event of a power failure when the facility grapple is engaged on a lifting pintle, the lifting lugs will automatically lock in place. The grapple is equipped with a proximity switch interlocked with the drive motor that rotates the pivot dogs. The pivot dogs can only rotate when the switch is in contact with a pintle. During lifting, the space between the pintle and the proximity switch prevents the pivot dogs from rotating. The Upper Hot Cell facility grapple is identical to the FCLR facility grapple described in Section 2.5.4.5.6.

A crane hook, rated at 15 tons, can be used with the facility grapple. The hook is attached to a handling pintle with a flange.

2.5.4.3.4 Upper Hot Cell Shield Plug Lift Fixtures

There are two Upper Hot Cell shield plug lift fixtures, one for each size shield plug. Both fixtures can be used with the Upper Hot Cell crane to remove their respective Upper Hot Cell shield plug, or both shield plugs can be removed at the same time using only the large Upper Hot Cell shield plug lift fixture. The small Upper Hot Cell shield plug lift fixture resembles a tripod. It is 9 feet tall with a handling pintle at the top that is engaged by the Upper Hot Cell facility grapple. The legs are fabricated from 3-inch schedule 40 pipe. Each leg has an engagement pin that can engage lifting lugs, on a 13-inch radius, on the small shield plug removal adapter. A centering pin is provided near the bottom of the shield plug lift fixture to engage the shield plug removal adapter and align the fixture with the removal adapter. The fixture is lifted by the Upper Hot Cell crane with the facility grapple installed. The fixture is rotated by the rotating block to allow it to engage the shield plug removal adapter lifting lugs. The Upper Hot Cell small shield plug lift fixture weighs approximately 400 pounds and has a lift capacity of approximately 10,000 pounds.

The shield plug removal adapter is a fabricated steel fixture that is attached to the small shield plug with three bolts through holes in its base plate. It has three arms, each with a lifting lug that can be engaged by the small Upper Hot Cell shield plug lift fixture. The centerline of the lifting lugs is on a 13-inch radius. The adapter has a height of 12.375 inches and weighs approximately 160 pounds.

The large Upper Hot Cell shield plug lift fixture, similar in design to the small Upper Hot Cell shield plug lift fixture, is 11 feet tall and its engagement pins have a 39-inch radius. It is fabricated from 3-inch schedule 80 pipe to accommodate a greater lift weight. Its three engagement pins are designed to engage the three lifting lugs of the large shield plug removal adapter. The large Upper Hot Cell shield plug lift fixture weighs approximately 800 pounds and has a lift capacity of 20,000 pounds.

2.5.4.3.5 10-160B Drum Carriage Lift Fixture

The 10-160B drum carriage lift fixture is a pentagon with five legs and a centering guide post with a guide pin. Each leg has an engagement pin that engages a lift lug, mounted on a lifting post, on the drum carriage. The guide pin slides into the center of the drum carriage center stanchion. Figure 2.5-13 shows the 10-160B drum carriage lift fixture and a fully loaded (five 55-gallon drums) drum carriage. The 10-160B drum carriage lift fixture has a lift capacity of approximately 6,500 pounds.

2.5.4.3.6 Viewing Windows

Six Upper Hot Cell viewing windows are provided in the Operating Gallery. Four viewing windows are located in the north wall and two in the west wall. The window frames are cast in the 54-inch-thick concrete shield wall separating the Upper Hot Cell from the Operating Gallery. The frames are designed so that any radiation streaming paths parallel to the optical axis are prevented. The oil-filled shielding

windows are composed of the frame, leaded shielding glass, cover glasses, and trim frames. The cover glasses and gaskets retain the oil in the window housing. The cold side (Operating Gallery) consists of a tempered cover glass and three 5-inch-thick lead-shielded glasses. The hot side (Upper Hot Cell) contains a 1.5-inch-thick non-browning cover glass. The oil fill provides radiation shielding and acts as a heat transfer medium. An oil expansion tank is provided as a means of keeping the window full of oil despite the temperature excursions caused primarily by exposure to radiation and the lighting in the Upper Hot Cell.

2.5.4.3.7 Wall-Mounted Manipulators

There are four wall-mounted heavy-duty manipulators in the Upper Hot Cell, located at two inspection stations, which allow operators in the Operating Gallery to reproduce the natural movements and forces of the human hand. The operator must exert the same force on the master arm that he wishes to exert with the slave arm; however, the tong squeezing motion does have a mechanical force multiplication. The manipulators are used for performing tool handling, radiological surveying, and identification of canisters in the Upper Hot Cell. The manipulators are mounted in the wall of the Upper Hot Cell using a through tube and are equipped with counterweights that limit the motion and speed of travel in the event that the operator releases the manipulator control.

2.5.4.3.8 Overhead-powered Manipulator

The overhead-powered manipulator is a crane-mounted remotely controlled arm with shoulder, elbow, and wrist pivots that can be independently driven. The wrist can support various adapter tools including a hook hand and parallel jaw hand. The manipulator is suspended from a rotation-drive assembly, which permits full rotation of the manipulator about its vertical axis. The manipulator is attached to the rotation drive by two locking pins, which allow for remote removal of the manipulator from the rotation-drive assembly. The overhead-powered manipulator is designed to hold its load in place in the event of a loss of electrical power or a DBE.

The rotation drive is attached to the bottom of a telescoping tube that provides manipulator vertical motion. There are five square-nested telescoping sections connected in such a way that movement of any one tube causes all tubes to move. The telescoping tubes have an up–down travel of approximately 15 feet and have a lifting capacity of 5,000 pounds. The telescoping tube assembly is supported by the trolley carriage that travels on a bridge assembly. The bridge can travel east–west for approximately 50 feet at a speed of up to 22 fpm, whereas the trolley can travel north–south for approximately 25 feet at a speed of up to 15 fpm.

The control panel for the overhead-powered manipulator includes controls for bridge and trolley, hoisting, speed, and manipulator operation, and is located in the Operating Gallery. To protect the viewing windows in the north and west walls of the Upper Hot Cell, the overhead-powered manipulator speed control is designed to slow the bridge travel speed when the bridge is approximately 10 feet from the west wall and to slow the trolley travel speed when the trolley is approximately 10 feet from the north wall. The operator controls and indicators are located on a console.

2.5.4.3.9 Closed-Circuit Television System

The high-resolution CCTV cameras located in the Upper Hot Cell, the CUR, and Transfer Cell provide direct viewing of specific operations. Transfer Cell and Upper Hot Cell operations can be monitored in the CUR, the Upper Hot Cell Operating Gallery, the Transfer Cell Service Room, or the FCLR. The Upper Hot Cell operations can only be monitored in the Upper Hot Cell Operating Gallery. Each CCTV camera includes a camera head, a control unit, and connecting cable.

2.5.4.3.10 Shielded Transfer Drawer

The shielded Upper Hot Cell transfer drawer is used to transfer materials, such as radiological smear samples and small tools, from the Upper Hot Cell to a transfer drawer enclosure in the Operating Gallery (Figure 2.5-15). A motor-driven shield plug blocks the approximately 20-inch opening in the shield wall of the Upper Hot Cell. The shield plug travels approximately 46 inches perpendicular to the opening on rollers that ride on tracks fastened to a steel frame.

The Upper Hot Cell transfer drawer enclosure in the Operating Gallery side of the shield wall has a viewing window, two glove ports, and a transfer port. A motor-driven shield plug in the floor of the transfer drawer enclosure blocks off the Upper Hot Cell transfer port in the same manner as is done inside the Upper Hot Cell. The transfer drawer enclosure shield plug has a travel range of approximately 38 inches. The motors of the shield plugs are electrically interlocked so that only one shield plug is in the open position at any time. The Upper Hot Cell transfer drawer is moved in and out of the shield wall opening as the Upper Hot Cell shield plug is moved. A light screen machine guard system is installed inside the transfer drawer enclosure to prevent movement of the Operating Gallery shield plug while hands, gloves, or other obstructions are protruding though the transfer drawer enclosure glove ports or transfer canister port.

A sample tray is used for transferring the assessment swipes between the Operating Gallery and the Upper Hot Cell. The sample tray is manually moved into the shield wall opening and must be completely inside the shield wall opening before the Operating Gallery shield plug is closed.

The transfer drawer is a flat tray, roller-mounted on the drawer carriage that rolls on rails on the bottom of the opening of the Upper Hot Cell shield wall. When the Upper Hot Cell shield plug is closed and the transfer drawer enclosure shield plug is retracted, the operator can pull the sample tray into the transfer drawer enclosure.

2.5.4.3.11 Upper Hot Cell Shield Valve

The Upper Hot Cell shield valve body is a carbon-steel plate 6.5 inches thick by 68 inches wide by 67.5 inches long and is supported on four rollers that ride on two floor-mounted flat tracks. Four guide rollers are mounted in the bottom of the shield and ride on the inside edges of the tracks to keep the shield in line. The shield is positioned by a motor-driven ball screw actuator that includes a brake and a rotary limit switch assembly. The shield valve assembly weighs approximately 10,000 pounds. The shield valve provides permanent shielding and separates the Upper Hot Cell and the Transfer Cell. When moving Waste Canisters between the Upper Hot Cell and the Transfer Cell, ventilation airflow is from the Transfer Cell into the Upper Hot Cell. Guide tubes are provided between the Upper Hot Cell and the Transfer Cell to ensure proper alignment of a canister being transferred between the two locations. The Upper Hot Cell shield valve is interlocked to other RH Waste Handling system components as follows:

- The Upper Hot Cell shield valve cannot be opened unless the CUR floor shield valve and the Transfer Cell ceiling shield valve are closed.
- The Upper Hot Cell shield valve cannot be closed unless the Upper Hot Cell facility grapple is in the preset high limit position.
- The Upper Hot Cell shield valve and the CUR floor shield valve must be closed before the Transfer Cell ceiling shield valve can be opened.
- The Upper Hot Cell shield valve and the Transfer Cell ceiling shield valve must be closed before the CUR floor shield valve can be opened.

- The Upper Hot Cell shield valve cannot be opened unless the Transfer Cell Shuttle Car is positioned below the Upper Hot Cell shield valve port and the detensioning robot is in the home position.

2.5.4.4 Transfer Cell Equipment

2.5.4.4.1 Transfer Cell Shuttle Car and Shielded Insert

The Transfer Cell Shuttle Car (Figure 2.5-16) is a steel-frame structure with a single cask basket designed to accommodate a loaded RH-TRU 72-B shipping container or a shielded insert. The car is used to place a cask in four positions:

1. Under the CUR floor shield valve (CUR port)
2. Under the Upper Hot Cell shield valve (Upper Hot Cell port)
3. Under the Transfer Cell ceiling shield valve (FCLR port)
4. In the RH-TRU 72-B cask lid storage position

A platform located on the car just west of the cask basket is used to store the inner vessel lid of the RH-TRU 72-B cask during canister transfer to the RH Waste Cask. The shuttle car, approximately 22 feet long by 10 feet deep by 6 feet wide, has four steel wheels that ride on rails mounted on support trestles, and is designed to support its load and remain on the rails in the event of a DBE (SDD WH00).

The shielded insert, described in Section 2.5.3.1, can also be loaded into the cask basket. The shielded insert allows for the shielded transport of Facility Canisters that have a larger diameter than the RH Waste Canister from under the Upper Hot Cell port to under the FCLR port.

Impact limiters are cylindrical containers filled with sand located under each cask/canister handling position. The impact limiters are designed to minimize damage to the casks, shielded insert, canisters, and the Transfer Cell floor in the event of an accidental drop of a cask or shielded insert by the CUR 25-ton crane or a drop of a canister by the FCLR grapple hoist. The impact limiters also help to ensure that the RH-TRU 72-B cask, shielded insert, or canister remain upright after being dropped.

The bottom support beams of the cask basket are connected to the Transfer Cell Shuttle Car with shear bolts designed to break away, allowing the cask or shielded insert to fall through the bottom of the basket into the impact limiters. This prevents serious damage to the Transfer Cell Shuttle Car structure and aids in accident recovery by maintaining the RH-TRU 72-B cask or shielded insert in an upright position.

The Transfer Cell Shuttle Car is driven east and west by a chain drive system at the west end of the Transfer Cell. A solid shaft that penetrates the Transfer Cell wall drives the double-chain sprockets. The gear reducer and drive motor are located in the Transfer Cell Service Room. The reducer and drive motor are connected by a triple V-belt. A turnbuckle linkage mounted on the gear reducer can adjust belt tension. Proper chain drive tension is maintained by two counterweights that hang from the chains near the west end of the Transfer Cell. A single chain can move the Transfer Cell Shuttle Car.

The Transfer Cell Shuttle Car position is sensed by an encoder on the chain drive shaft and controlled by the Programmable Logic Controller in the FCLR control panel.

The Programmable Logic Controller also controls the speed of the Transfer Cell Shuttle Car through the variable-speed drive to allow shifting from high speed to low speed as the programmed stop locations are approached. The Transfer Cell Shuttle Car has two over-travel stop limit switches.

The shuttle car is interlocked with the CUR floor shield valve, the Upper Hot Cell shield valve, and the Transfer Cell ceiling shield valve such that the shuttle car cannot move unless the three shield valves are closed.

2.5.4.4.2 Detension Robot

The detension robot, located in the Transfer Cell, is used to detension the inner lid bolts of the RH-TRU 72-B shipping container. The robot incorporates a torque wrench end-of-arm tool. The robot detensioning sequence is initiated and controlled from the operator console located in the FCLR. It can also be operated by a pendant located outside the Transfer Cell. Once the detensioning process has been initiated, it is controlled by a Programmable Logic Controller located in the FCLR console.

2.5.4.4.3 Swipe Robot

The swipe robot is used to take swipes of the RH-TRU 72-B inner lid and the Waste Canister to detect the presence of surface contamination before completing the canister transfer from the RH-TRU 72-B shipping package to the RH Waste Cask. The swipe robot interfaces with the swipe delivery system. The robot is equipped with a specially designed end-of-arm tool with pneumatically operated finger grippers. The grippers are designed to interface with the swipe holders. The swipe robot is controlled from the operator console located in the FCLR. It can also be operated by a pendant located outside the Transfer Cell.

2.5.4.4.4 Swipe Delivery System

The swipe delivery system is used to transport swipes from the Transfer Cell to the Service Room for counting and then to return clean swipes to the Transfer Cell. The swipe delivery system's send-and-receive station is located in the Service Room vent hood. The vent hood is kept at a slightly negative pressure with respect to the Service Room pressure. The swipe delivery system interfaces with the send-and-receive station in the Service Room with an acceptor tube that is mounted adjacent to the swipe robot in the Transfer Cell. The swipe delivery system operation is initiated by health physics personnel at the send station or automatically when a swipe is placed in a pneumatic swipe carrier at the acceptor tube in the Transfer Cell. A blower provides the motive force to send the pneumatic swipe carrier between the send-and-receive station and the acceptor tube. The blower exhausts to the Transfer Cell and the vent hood exhausts into the RH Bay ventilation system.

2.5.4.4.5 Transfer Cell Ceiling Shield Valve

The Transfer Cell ceiling shield valve is located under the port connecting the Transfer Cell to the FCLR. The shield valve has a 12-inch-deep steel frame supporting a 42-inch-square shield plate that is 1 inch thick. The approximately 8-foot-long frame is bolted to the Transfer Cell ceiling. The electric-motor-driven screw actuator is attached to the shield plate with a clevis pin. The Transfer Cell ceiling shield valve is closed, except during RH Waste Cask loading activities. The valve motor is equipped with torque switches that will automatically shut off power if the valve is closed against an object in its path. The Transfer Cell ceiling shield valve provides permanent shielding and is interlocked to other RH Waste Handling system components as follows:

- The Transfer Cell ceiling shield valve cannot be opened unless the CUR floor shield valve is closed.
- The Transfer Cell ceiling, CUR, and Upper Hot Cell shield valves are interlocked with the Transfer Cell Shuttle Car drive so that the Transfer Cell Shuttle Car cannot be moved unless all shield valves are closed. This interlock prevents damage to the canister from Transfer Cell Shuttle Car movement during canister transfer.
- The Transfer Cell ceiling shield valve cannot be closed with the RH Waste Cask bottom shield valve open.
- The Transfer Cell ceiling shield valve cannot be opened if the telescoping port shield is not in contact with RH Waste Cask bottom shield valve.

2.5.4.4.6 Canister Alignment Fixture

The canister alignment fixture is installed on the Transfer Cell ceiling, adjacent to the Transfer Cell ceiling shield valve, in a location that will not interfere with normal Transfer Cell operations. The fixture will be used only if an off-normal event occurs that would require an RH Waste Canister to be transferred from the RH Waste Cask back into the Transfer Cell. The alignment fixture consists of a tapered conical guide welded to a flat alignment plate. Slide rails interface with the alignment plate and are attached and aligned to the east side of the Transfer Cell ceiling shield valve steel fame. The installation allows the alignment fixture to be positioned by the swipe robot and only when the Transfer Cell ceiling shield valve is open.

2.5.4.4.7 Transfer Cell Cameras

CCTV cameras and vision cameras are located in the Transfer Cell and are used to provide operators direct viewing of Transfer Cell operations. Visuals provided by the cameras can be monitored in the CUR, the Upper Hot Cell Operating Gallery, the operator console located in the FCLR, and the Transfer Cell Service Room.

2.5.4.5 Facility Cask Loading Room Equipment

2.5.4.5.1 Facility Cask Transfer Car

The FCTC (Figure 2.5-17) is a rail-mounted car weighing approximately 7,900 pounds that is electrically powered via cable with a variable-speed electric motor that drives two wheels at speeds up to 30 fpm. The FCTC has two A-frame structures, each with a trunnion saddle to support the RH Waste Cask weight and transport the RH Waste Cask in the stable horizontal position on four 18-inch-diameter wheels. It also allows rotating the Facility Cask on its trunnions to the vertical position by the FCRD. The FCTC has brackets that engage locking pins on the rotating device to prevent movement of the car while the Facility Cask is being rotated. The FCTC car is designed to perform the following functions:

- Serve as the platform for the Facility Cask in the FCLR.
- Transport the Facility Cask from the FCLR to the Waste Shaft Conveyance.
- Serve as the platform for the RH Waste Cask while the RH Waste Cask is on the Waste Shaft Conveyance.
- Transport the RH Waste Cask from the Waste Shaft Conveyance to the E-140/S-400 intersection.

An FCTC position limit switch is provided to stop the car in its load position over the telescoping port shield.

2.5.4.5.2 Facility Cask Turntable

The Facility Cask Turntable is a circular platform containing tracks to guide the FCTC to the RH Bay or to the Waste Hoist Collar from the FCLR. The turntable is supported by air bearings recessed into the FCLR floor. Compressed air is manually supplied by a hand valve to assist the rotation of the turntable. The turntable can be rotated 360 degrees to change the direction of FCTC travel.

2.5.4.5.3 Facility Cask Rotating Device

The FCRD (Figure 2.5-14), a floor-mounted hydraulically operated structure, is designed to rotate the RH Waste Cask from the horizontal position to the vertical position for RH Waste Canister loading and then back to the horizontal position after the RH Waste Canister has been loaded into the RH Waste Cask. The FCRD is equipped with a 40-gallon hydraulic tank and uses hydraulic fluid that has a flash point of 302°F. Hydraulic rams are attached to the center of the connecting beams of two rotating arms. One end of each rotating arm is attached to a pivot point on the floor-mounted structure, while the other end latches to a pivot pin on the RH Waste Cask top shield valve enclosure. Hydraulic rams extend to rotate the RH Waste Cask to the vertical position and retract to rotate the RH Waste Cask to the horizontal position.

2.5.4.5.4 6.25-ton FCLR Grapple Hoist

The 6.25-ton FCLR grapple hoist, mounted to the ceiling of the FCLR, is designed to maintain control of its load during a DBE. The hoist is gear driven by a two-speed induction motor. The hoist has a position transmitter that sends a position signal to the control console Programmable Logic Controller. A load cell monitors the weight being applied to the grapple hoist and provides a signal to the Programmable Logic Controller to shut down the hoist if the load is excessive. In the event of a power failure, the 6.25-ton FCLR grapple hoist brakes are automatically set (SDD WH00). Figure 2.5-18 shows the 6.25-ton FCLR grapple hoist, the shield bell, and the stationary alignment sheave.

2.5.4.5.5 Stationary Alignment Sheave

The stationary alignment sheave (a single cable pulley) is anchored to the FCLR ceiling above the cask loading station. The stationary alignment sheave is used to convert the horizontal travel of the hoist cable to the vertical travel of the facility grapple. The load cell is a pin type on which the sheave rotates. The cable passes over the pulley and down to the block in the top of the shield bell. The cable then extends back to the ceiling, where it is attached to the ceiling. This arrangement provides an accurately positioned vertical lift for the facility grapple even though there is a lateral shift of the cable on the hoist drum. A limit switch, also part of the stationary alignment sheave, is mounted on a bracket attached to the pulley housing and is used to sense the upper travel limit of the shield bell and prevent the facility grapple from being raised too high.

2.5.4.5.6 FCLR Facility Grapple

The FCLR facility grapple (Figure 2.5-12) is a lifting fixture designed to engage a standard WIPP pintle. The facility grapple has an axially mounted, electrically operated actuator that rotates a drive gear that drives three lifting lugs into or out of engagement under the WIPP pintle. In the event of a power failure when the facility grapple is engaged on a lifting pintle, the lifting lugs will automatically lock in place. The grapple is equipped with a proximity switch interlocked with the drive motor that rotates the pivot

dogs. The pivot dogs can only rotate when the switch is in contact with a pintle. During lifting, the space between the pintle and the proximity switch prevents the pivot dogs from rotating.

2.5.4.5.7 Telescoping Port Shield

The telescoping port shield (Figure 2.5-19) is mounted in the floor of the FCLR, centered directly over the Transfer Cell ceiling shield valve opening. An electric-motor-driven jacking system is used to raise the telescoping port shield to mate with the RH Waste Cask lower shield valve housing during RH Waste Canister transfer. Two switches mounted in the face of the RH Waste Cask's bottom shield valve housing are actuated when the telescoping port shield is in contact with the shield valve housing. The telescoping port shield must be in contact with the RH Waste Cask before the bottom shield valve can be opened.

Limit switches mounted above and under the FCLR floor are actuated by the shield ring and indicate when the telescoping port shield is fully up and fully down. The telescoping port shield provides radiation shielding when the Transfer Cell ceiling shield valve and the RH Waste Cask bottom shield valve are open during transfer of an RH Waste Canister into the RH Waste Cask.

2.5.4.5.8 Shield Bell and Block

The shield bell (Figure 2.5-20) is a heavy-walled steel casting that provides radiation shielding from the RH Waste Canister when the RH Waste Cask top shield valve is open. The shield bell has an approximately 18-inch internal cavity to house the facility grapple and the grapple support block. The grapple support-block cavity contains the single pulley block and provides a path for the facility grapple electrical cable to pass through to the grapple. When not in use, the shield bell rests on the top of the facility grapple support block, which is suspended from the grapple hoist. The shield bell is supported by the RH Waste Cask when the facility grapple is in use.

Two switches mounted in the face of the RH Waste Cask's top shield valve housing are actuated when the shield bell is resting on the RH Waste Cask. The shield bell must be in contact with the RH Waste Cask before the top shield valve can be opened.

2.5.4.5.9 Control Console

The FCLR control console is in a 19-inch-thick concrete wall shadow shield area with a dry shield window in the north side of the FCLR. The floor-mounted control console has a Programmable Logic Controller, control switches, indicators, and a television monitor that displays the Transfer Cell operations. The operator can control Transfer Cell and FCLR operations using the FCLR control console.

2.5.4.6 Underground RH Waste Handling Equipment

The UG RH Waste Handling and emplacement equipment consists of diesel-powered forklifts, the HERE, and the HEM. RH Waste Handling equipment is the largest equipment transporting waste in the waste disposal area.

2.5.4.6.1 Horizontal Emplacement and Retrieval Equipment

The HERE is used to transfer an RH Waste Canister from the RH Waste Cask into a horizontal disposal borehole. The HERE includes the items listed in Table 2.5-1 with a total hydraulic fluid capacity of 110 gallons.

The Waste Transfer Machine Assembly (WTMA) consists of the Alignment Fixture, Leveling Platform, Staging Platform, and Carriage (Figures 2.5-21, 2.5-27, and 2.5-28). When assembled with the Facility Cask and Shield Plug Carriage, they are used to push a RH Canister into the borehole.

Table 2.5-1. Horizontal Emplacement and Retrieval Equipment

Waste Transfer Equipment		Borehole-Related Components
Alignment fixture	RH Waste Cask	Shield plug
Shield collar	Portable power cable	Shield plug carriage
Leveling platform	Control console	Shield plug rings
Staging platform	Transfer carriage	

2.5.4.6.2 Alignment Fixture

The alignment fixture (Figure 2.5-21) provides a reference plane for aligning the waste transfer mechanism (WTM) with respect to the borehole to allow Waste Canister and shield plug installation. It is a welded carbon-steel structure consisting of a base plate with three hydraulic jacks and a vertical faceplate with holes for attaching and bolting the shield collar. It has two forklift pockets to facilitate its moving. The horizontal base supports the front end of the WTM. It has two alignment pins located to ensure that the WTM and shield collar line up.

The three hydraulic jacks are used to align the alignment fixture with the borehole. The hydraulic system is powered by a hydraulic pump with a 30-gallon hydraulic tank located on the alignment fixture. The alignment fixture has three tilt sensors and three proximity switches. The tilt sensors provide tilt information to permit the operator to level the alignment fixture. The proximity switches sense the gap between the shield collar and the RH Waste Cask.

The alignment fixture has four hydraulic locking clamps used to rotate and lock the shield collar to the RH Waste Cask. The locking clamps are controlled by a selector switch located on the control console. The alignment fixture also has a passive FSS with four discharge nozzles aimed at the hydraulic power unit and the leveling jacks. The interlocks between the HERE transfer mechanism, RH Waste Cask, and alignment fixture provide the following automatic actions:

- The RH Waste Cask front and rear shield valves cannot be opened unless the tilt sensors on the HERE indicate that the WTM is aligned with the alignment fixture, the proximity switches on the alignment fixture detect the RH Waste Cask, and the proximity switches on the transfer mechanism detect the RH Waste Cask.
- The RH Waste Cask shield valves cannot be closed if the HERE transfer mechanism is extended beyond the respective shield valve.

2.5.4.6.3 Alignment Fixture Assembly

The Alignment Fixture Assembly (AFA), Figure 2.5-21, used for the HERE has been redesigned to include a Shield Valve Assembly in place of the shield collar with proximity detection sensors and hydraulic actuated cam locking clamps. The proximity sensors are mounted on the Shield Valve Assembly so that they will detect the close proximity of an RH Waste Cask (either the Facility Cask or LWFC) and are used as one of the interlock control signals to allow the RH casks front shield valve to be opened. The hydraulic cam locks mounted on the shield collar are used to clamp the RH cask to the

Shield Valve Assembly. The cam locks clamp into matched slots in the RH cask. The fixture has not yet been installed. The HERE has not yet been modified to incorporate the Shield Valve Assembly.

2.5.4.6.4 Leveling Platform

The leveling platform is a steel frame on which the components that interface with the alignment fixture and staging platform are located (Figure 2.5-21).

The front end of the leveling platform has two holes that sit on the alignment fixture alignment pins. A motor-driven hydraulic pump operates a hydraulic jack located at the rear of the leveling platform. The jack is used to align the WTM (consisting of the leveling platform, staging platform, and transfer carriage) axis with the axis of the alignment fixture shield collar.

Three sets of rails are mounted on each side of the leveling platform. The rails support the staging platform and interface with roller bearings on the staging platform that allows the staging platform to travel on the rails. A staging-platform drive system is mounted on the leveling platform. The drive system moves the staging platform in the forward and reverse direction to position the front face of the RH Waste Cask against the shield collar.

2.5.4.6.5 Staging Platform

The staging platform is a steel frame that rests on roller bearings that engage and ride on the rails of the leveling platform. The staging platform supports the RH Waste Cask and transfer carriage, and has a hydraulic ram providing linear motion to the transfer carriage. The transfer carriage rides on two rails bolted to the top of both sides of staging platform. The staging platform requires a regulated compressed air supply to operate the RH Waste Cask locking pins.

The following control devices are mounted on the staging platform:

- A tilt sensor used to monitor the longitudinal tilt of the WTM for alignment with the alignment fixture.
- A rotary limit switch used to stop the transfer carriage forward and reverse travel motion before the travel limits have been reached.
- A two-position detection limit switch, which is activated when the shield plug carriage is seated on the staging platform rails.

2.5.4.6.6 Transfer Carriage

The transfer carriage (Figure 2.5.21) is a large steel cylinder with its own hydraulic system that is used to push the RH Waste Canister from the RH Waste Cask into the borehole or the shield plug from the shield plug carriage into the borehole.

The rear end of the transfer carriage houses the transfer mechanism and includes heavy wall shielding to prevent exceeding radiation dose rate limits when the RH Waste Cask top shield valve is opened. The hydraulic drive system that operates the transfer mechanism is mounted to the transfer carriage housing.

The transfer carriage has roller bearings that ride on the staging platform rails. The staging platform-based drive system moves the transfer carriage forward and in reverse to emplace a Waste Canister. The transfer carriage is positioned with the front of the housing against the RH Waste Cask during Waste Canister

emplacement. During shield plug emplacement, the transfer carriage is retracted to provide room for installing the shield plug carriage on the staging platform.

The transfer mechanism consists of a double-acting five-stage telescopic hydraulic cylinder attached at the plunger end of the transfer carriage housing end plate. The front end of the cylinder is supported by two rollers attached to a steel plate, which provides shielding and supports the transfer mechanism grapple. The transfer mechanism grapple, similar to the facility grapples used with the Upper Hot Cell crane and in the FCLR, is not closed when emplacing either the RH Waste Canister or the shield plug into the borehole. Proximity switches, mounted on the grapple, detect grapple contact with the pintle of the RH Waste Canister or shield plug. Position switches indicate when the grapple jaws are open or closed. The drive motor stops when the transfer mechanism reaches a preset travel distance. If necessary, the transfer mechanism can be manually retracted.

The transfer carriage is equipped with four locking clamps to secure the carriage to the RH Waste Cask and shield plug carriage. Multi-turn rotary potentiometers monitor the linear travel distance of the transfer mechanism. Three proximity metal-detecting position switches stop the carriage drive when the transfer carriage is within 0.5 inch of the RH Waste Cask.

2.5.4.6.7 Shield Plug Carriage

The shield plug carriage maintains the shield plug in a horizontal position during emplacement and aligns the bottom of the shield plug with the bottom of the RH Waste Cask cavity. The shield plug carriage is placed on and supported by the rails of the staging platform, which also supports the transfer carriage. The shield plug carriage has two forklift pads to facilitate handling by a forklift and has four roller-bearing supports that ride on the staging platform rails.

2.5.4.6.8 Control Console

The control console for the HERE provides all the controls and information displays necessary to operate the waste transfer equipment. The console is mounted on a movable platform to facilitate relocation. The console can be located at a sufficient distance from the HERE to ensure radiation doses to the console operator are kept as low as reasonably achievable (ALARA).

Each step in the operational sequence is controlled by the operator through an electronic process controller mounted in the control console. The process controller incorporates interlock functions to ensure the proper sequence of operations.

2.5.4.6.9 Air Compressor

An air compressor for the HERE provides the air supply to drive the locking pins on the RH Waste Cask shield valves to the retracted position so that the valves can be opened. A switch on the control console energizes a solenoid that allows air pressure to the locking pins. The air compressor is not used for the LWFC because its locking pins are electrically actuated.

2.5.4.6.10 Portable Power Cable

The portable power cable is used to electrically connect the HERE to a 480-volt, three-phase, 60-hertz power source.

2.5.4.6.11 Transport Equipment

The transport equipment consists of wheel assemblies that convert the leveling platform to a trailer-like configuration used to move the WTM assembly from one location to another. The assembly can be towed by a forklift or tractor.

2.5.4.6.12 Borehole Shield Plugs

A shield plug is inserted into the borehole after emplacement of the RH Waste Canister. It provides shielding from the emplaced RH Waste Canister. The shield plug is a cylinder approximately 61 inches long and 29 inches in diameter and is made of concrete shielding material inside a steel shell with a removable pintle placed on a pintle pipe extending from one end of the plug. The shield plug is inserted so that the pintle end is facing outward from the borehole after emplacement. Each shield plug has integral forklift pockets and weighs approximately 3,900 pounds.

Steel shielding rings can be used to prevent radiation streaming from the gap between the shield plug and the borehole. When used, shielding rings are installed after the shield plug. The rings are made from carbon-steel plate, configured with an opening in the center that fits over the center assembly of a shield plug. Areas of the shielding rings that do not contribute to the shielding function have cutouts to minimize weight to allow operators to install them quickly.

Shield plugs are transported by a forklift using either the shield plug carriage or the forklift pockets provided in the shield plugs. Figure 2.5-22 shows the Waste Canister and shield plug.

2.5.4.6.13 41-ton Diesel Forklift

The 41-ton diesel forklift has a lifting capacity of 82,000 pounds and a maximum lifting height of approximately 99 inches. It is used to lift the RH Waste Cask (either the Facility Cask or LWFC) from the FCTC and transport it at a speed of approximately 3 to 4 mph to the active RH Waste emplacement room, where it places the loaded RH Waste Cask on the waste emplacement equipment (Figure 2.5-23). It is also used to transport the WTM assembly. The forklift has a 50-gallon diesel fuel tank and a 125-gallon hydraulic fluid tank. The forklift is equipped with an automatic FSS and a portable fire extinguisher. The hydraulic fluid is a water/glycol-based fluid that will not flash or support combustion.

2.5.4.6.14 20-ton Diesel Forklift

The 20-ton diesel forklift has a lifting capacity of 40,000 pounds and a maximum lifting height of approximately 84 inches. The forklift has a 50-gallon diesel fuel tank and a 64-gallon hydraulic fluid tank. It is used to lift and handle the alignment fixture assembly, consisting of the alignment fixture and the shield valve assembly. The forklift is equipped with an automatic FSS and a portable fire extinguisher.

2.5.4.6.15 6-ton Diesel Forklift

The 6-ton diesel forklift has a lifting capacity of 12,000 pounds and a maximum lifting height of approximately 72 inches. The forklift has a 37-gallon diesel fuel tank and a 24-gallon hydraulic fluid tank. It is used to lift and handle the shield plug carriage and the shield plug. The forklift is equipped with an automatic FSS and a portable fire extinguisher.

2.5.4.6.16 Horizontal Emplacement Machine

The HEM (Figure 2.5-24) is used to transfer an RH Waste Canister from the LWFC into a horizontal disposal borehole. The HEM will be modified later to accommodate the Facility Cask. The HEM includes the items listed in Table 2.5-2 with a total hydraulic fluid capacity of 200 gallons.

- The cask carriage is the support carriage that moves the RH Waste Cask or the shield plug carriage into contact with the shield valve assembly.
- The carriage extends the shield valve assembly into the borehole.
- The HEM frame assembly includes the machine support frame, drive mechanism, and leveling jacks, as well as the HEM control panel and portable drive control box that will be used to operate the Waste Handling equipment and guide the HEM into position, respectively.
- The HEM control panel is situated away from the HEM during waste emplacement.

Table 2.5-2. Horizontal Emplacement Machine

Waste Transfer Equipment		Ancillary Equipment
Alignment fixture with shield valve assembly	Waste transfer mechanism	Shield plug carriage
Frame assembly	Control console	Portable drive control
Cask carriage	Portable power cable	

2.5.4.6.17 Shield Valve Assembly

The shield valve assembly is a welded carbon-steel structure that is an integrated component of the HEM. The shield valve assembly consists of a shield collar, shielded valve, and various sensors, motors, and actuators needed to perform its function.

The shield valve assembly provides a reference plane for aligning the frame assembly of the HEM with respect to the borehole. If needed, laser alignment tools mounted on the shield valve assembly may also be used to assist with HEM alignment to the borehole. Once aligned, the shield valve assembly has an integral electric motor to move it along an associated rail system so that the shield collar can be inserted into the borehole.

The shield valve gate uses a gear-reduction electric motor drive to raise and lower it. The open and closed positions are determined by associated limit switches that are connected to the HEM control panel. The gate is locked in the open position by a pin driven by an electrically powered actuator.

Mounted on the shield valve assembly are three proximity switches to sense the gap between the shield valve and the LWFC. The output of all three proximity switches is required to determine whether the RH Waste Cask is in close enough proximity to verify proper mating of shielding components between the shield valve assembly and the LWFC.

The shield valve assembly has four hydraulic locking clamps used to rotate and lock the shield valve to the LWFC and ensure that the shielding surfaces remain connected between the two. The locking clamps are controlled by a selector switch on the control console. The interlocks between the HEM WTM, RH Waste Cask, and the shield valve assembly provide the following automatic actions:

- The LWFC front shield valves cannot be opened unless the proximity switches on the shield valve assembly detect the RH Waste Cask and the proximity switches on the WTM detect the LWFC.
- The LWFC rear shield valve and the shield valve gate cannot be opened unless the proximity switches on the shield valve assembly detect the LWFC and the proximity switches on the WTM detect the LWFC.
- The LWFC shield valves and the shield valve gates cannot be closed if the HEM WTM is extended beyond the respective shield valve gate.

2.5.4.6.18 Frame Assembly

The frame assembly is a steel frame on which the components operate and interface with the shield valve assembly, cask carriage, WTM, and the shield plug carriage.

The frame assembly has two motor-driven hydraulic pumps that operate the four hydraulic jacks and the four wheel assemblies. The jacks are used to align the HEM axis with the axis of the shield valve assembly. The four-wheel assemblies are used to maneuver the HEM. The wheel assemblies consist of hydraulic drive motors and slow drive motors associated with 44-inch tires.

Two sets of rails are mounted on each side of the frame assembly. The rails support the WTM, cask carriage, and shield valve assembly and interface with roller bearings on the WTM, cask carriage, and shield valve assembly that allow them to travel on the rails.

2.5.4.6.19 Cask Carriage

The cask carriage is a steel frame that rests on roller bearings that engage and ride on the rails of the frame assembly. The cask carriage supports the RH Waste Cask when emplacing the RH Waste Canister or the shield plug carriage when inserting the shield plug. The cask carriage has a hydraulic ram that provides linear motion to extend and retract the cask carriage to the shield valve assembly.

2.5.4.6.20 Waste Transfer Mechanism

The description of the WTM for the HEM is the same as the transfer carriage for the HERE, as described in Section 2.5.4.6.16.

2.5.4.6.21 Shield Plug Carriage

The shield plug carriage (Figure 2.5-25) holds the shield plug in a horizontal position during emplacement and aligns the bottom of the shield plug with the bottom of the shield valve assembly. The shield plug carriage is placed on the cask carriage after the LWFC is removed from the HEM, which rides on the rails of the frame assembly. The shield plug carriage has two forklift pads to facilitate handling by a forklift.

2.5.4.6.22 Control Console

The description of the control console for the HEM is the same as the control console for the HERE as described in Section 2.5.4.6.8.

2.5.5 Remote-Handled Waste Handling Process

2.5.5.1 Remote-Handled Waste Receiving

On arrival at the gate of the WIPP facility, each incoming RH shipment is inspected to verify the shipment documentation and a security check is performed. A radiological survey of the shipping package is performed either at the gate or in the WHB Parking Area Unit. If radiation or contamination levels exceed the criteria in the *Waste Isolation Pilot Plant Radiation Safety Manual* (WP 12-5), subsequent activities include posting, decontamination, or both. If the shipping package has visible external damage, the Waste Handling process will likely proceed and the shipping package will be subsequently repaired.

Following turnover of the shipping documentation, the driver parks the trailer in the WHB Parking Area Unit for RH shipping package trailers near the RH entrance to the WHB. The driver unhooks the tractor and is subsequently released. The number of loaded RH shipping packages on trailers in the WHB Parking Area Unit is coordinated with CH Waste Handling such that the WHB Parking Area Unit limits established in the HWFP are not exceeded.

2.5.5.2 Remote-Handled Transuranic 72-B Remote-Handled Waste Handling Process

2.5.5.2.1 Cask Preparation

When space becomes available, a trailer with a loaded RH-TRU 72-B shipping package is brought into the RH Bay. Because of space limitations, only two loaded shipping packages are administratively allowed in the RH Bay at a time. After the trailer is spotted inside the RH Bay, operators either use a motorized manlift work platform or stand on removable platforms on the trailer to unbolt the two impact limiters from the shipping package while it is still on the trailer. The 140/25-ton overhead bridge crane is used to lift the impact limiters and place them on support stands. The RH-TRU 72-B lifting yoke is connected to the 140/25-ton overhead bridge crane. The cask-lifting yoke engages the handling trunnions of the RH-TRU 72-B shipping package, rotates the package to the vertical position, and then lifts it clear of the trailer and sets it on the RH-TRU 72-B RCTC. If the RH-TRU 72-B shipping package arrives on a trailer with hydraulics to rotate the shipping package, the shipping package is rotated after the impact limiters are removed. The shipping package is removed from the trailer using the cask-lifting yoke. The A-frame of the RH-TRU 72-B RCTC supports the shipping package at the transporter trunnions. The RH-TRU 72-B shipping container is moved to the cask preparation station. The RH-TRU 72-B Waste Handling process from the cask preparation stand through the FCLR is controlled by the RH-TRU RH Processing procedure. RH canister downloading and emplacement is controlled by the RH Waste Downloading and Emplacement or RH Waste Downloading/Emplacement Using Distributed Controls procedures. The cask preparation station, which straddles the RCTC rails, allows personnel to have access to the top area of the shipping package for conducting radiological surveys, performing physical inspections or minor maintenance, performing cask unloading preparation activities, and performing decontamination, if necessary.

After surveys for surface contamination and radiation levels are performed, the test port tool and vent adapter are installed on the outer lid sampling port. The outer lid sampling port is opened, using the test port tool, venting the atmosphere between the inner lid and outer lid. The test port tool and vent adapter are removed from outer lid sampling port and the outer lid is unbolted. The RH-TRU 72-B cask outer lid-lifting fixture is attached to the outer lid using the 2.5-ton jib crane. The outer lid is lifted to allow the underside of the outer lid and top of the inner lid to be surveyed for contamination. The outer lid is placed on a storage stand. The test port tool and vent adapter are installed on the inner lid sampling port. The inner lid sampling port is opened, venting the shipping package cavity atmosphere through an assessment

filter and the HEPA roughing filters. The radiological assessment filter is checked for radioactive contamination. The test port tool and vent adapter are removed from the inner lid sampling port. The inner lid vent is opened to equalize the pressure between the shipping package cavity and atmosphere. Then the inner lid pintle is attached to the inner lid. The pintle is used as a lifting fixture for the inner lid and interfaces with the facility grapple used to transfer a RH Waste Canister into the RH Waste Cask (Facility Cask or LWFC).

2.5.5.2.2 Cask Unloading Room

The RH-TRU 72-B shipping package is moved from the cask preparation station into the CUR. The CUR 25-ton crane with the RH-TRU 72-B cask-lifting fixture engages the two opposing lifting trunnions of the shipping package. The 25-ton crane lifts the shipping package from the RH-TRU 72-B RCTC and positions it over the CUR shield valve. Before the CUR shield valve can be opened, the CUR 25-ton crane has to be positioned over the floor shield valve, the Transfer Cell Shuttle Car cask receiver has to be positioned under the floor shield valve, the Transfer Cell ceiling shield valve has to be closed, the Upper Hot Cell shield valve has to be closed, and the Upper Hot Cell floor shield plugs must be installed. The process is reversed when an RH-TRU 72-B shipping package is removed from the Transfer Cell.

Ventilation flow is from the CUR to the Transfer Cell to protect the workers in the case of an off-normal event.

2.5.5.2.3 Transfer Cell

The RH-TRU 72-B shipping package is lowered through the open CUR floor shield valve port into the Transfer Cell and into the shuttle car road cask receiver. The design of the Transfer Cell Shuttle Car road cask receiver prevents lateral movement. Vertical movement is prevented by the weight of the cask. The RH-TRU 72-B cask lifting fixture is disengaged from the lifting trunnions. CCTVs and load cells on the lifting fixture are used to verify lifting fixture disengagement. The CUR 25-ton crane lifting fixture is lifted into the CUR and the floor shield valve is closed.

The Transfer Cell Shuttle Car is positioned at the robotic inner lid bolt detensioner, where the inner lid retaining bolts are detensioned. The bolts are spring loaded so that they remain in the lid. The Transfer Cell Shuttle Car then positions the RH-TRU 72-B shipping package directly below the Transfer Cell ceiling shield valve.

2.5.5.2.4 Facility Cask Loading Room

In the FCLR, the empty RH Waste Cask on the FCTC is positioned over the port to the Transfer Cell. The FCLR doors are closed. The RH Waste Cask is rotated to the vertical position by the FCRD to align it with the port to the Transfer Cell, the Transfer Cell ceiling shield valve, and the telescoping port shield.

When the RH Waste Cask has been rotated to the vertical position, the telescoping port shield, mounted in the floor of the FCLR, is raised to mate with the RH Waste Cask bottom shield valve body. The 6.25-ton FCLR grapple hoist is lowered so that the shield bell is in contact with the RH Waste Cask top shield valve body. With the shield bell and the telescoping port shield in contact with the RH Waste Cask, a totally shielded volume is formed to allow the safe transfer of an RH Waste Canister from the RH-TRU 72-B shipping container into the RH Waste Cask.

The RH Waste Cask top shield valve is opened, the Transfer Cell ceiling shield valve is opened, then the RH Waste Cask bottom shield valve is opened and the facility grapple is lowered through the RH Waste Cask into the Transfer Cell. The facility grapple engages the inner lid pintle and lifts the inner lid clear of

the RH-TRU 72-B shipping package. The Transfer Cell will be maintained at a negative pressure when an RH-TRU 72-B canister is being processed. When the lid is clear of the shipping package, radiological contamination swipes are taken robotically and transferred through the swipe delivery system to the Service Room for analysis. The lid is lifted above the Transfer Cell ceiling shield valve, the shield valve is closed, and the Transfer Cell Shuttle Car is repositioned so that the inner lid storage platform is aligned under the Transfer Cell ceiling shield valve. The Transfer Cell ceiling shield valve is opened and the facility grapple positions the inner lid on its storage platform and releases the pintle. The facility grapple is lifted so that the Transfer Cell ceiling shield valve can be closed. The Transfer Cell Shuttle Car is positioned so that the RH-TRU 72-B shipping package is in alignment with the Transfer Cell ceiling shield valve and a radiological smear is taken of the canister pintle. After the contamination check, the facility grapple is lowered until it engages the pintle of the RH Waste Canister.

As the RH Waste Canister is lifted from the RH-TRU 72-B shipping package and before it passes through the Transfer Cell Ceiling Shield Valve, radiological contamination swipes on the RH Waste Canister are taken robotically and transferred through the swipe delivery system to the Service Room for analysis. The RH Waste Canister identification is observed by CCTV cameras and verified against the hazardous waste manifest and the WIPP Waste Data System (WDS). During the lift, the CCTV cameras provide a visual inspection to verify the mechanical integrity of the RH Waste Canister. If any discrepancy in a RH Waste Canister's identity, integrity, or radiological contamination is detected, the RH Waste Canister is reinserted inside the RH-TRU 72-B, using the canister alignment fixture, if necessary, and the inner lid placed on the shipping container. Notifications of the discrepant RH Waste Canister will be made and a path forward determined.

2.5.5.3 10-160B RH Waste Handling Process

The facility was originally designed to process 10-160B in the Hot Cell Complex. This process is no longer part of the mission at WIPP but the 10-160B SSCs are present and therefore described in this chapter.

2.5.5.3.1 Cask Preparation

A loaded 10-160B shipping package is brought into the RH Bay. After the trailer is spotted inside the RH Bay, the top impact limiter is removed from the shipping package while it is still on the trailer. The 140/25-ton overhead bridge crane is used to lift the impact limiter and place it at a designated location. Operators install the lifting lugs on the sides of the shipping package. The 140/25-ton overhead bridge crane is used to lift the 10-160B shipping package from the trailer by engaging the lifting lugs and place it on the 10-160B RCTC. From this point in the process through the FCLR, the 10-160B Waste Handling process is controlled by the 10-160B RH Processing procedure. The vent port cap located on the shipping package lid is removed and the vent fixture with an integral radiological assessment filter and HEPA filter is placed over the vent port plug secured in place using electromagnets. The vent port plug is removed with the vent port tool and a sample of the shipping package atmosphere is pulled through the assessment filter using a vacuum pump integral to the vent tool controls. The assessment filter is analyzed for any contamination. A contamination smear of the following areas is performed:

- The vent port plug.
- The vent port plug tools.
- The surface area inside the vent fixture.

The filter is surveyed for contamination after the pressure is equalized and before the 10-160B Waste Handling process starts. Operations removes the cask lid bolts and installs a lid guide tool in the bolt holes to aid in placement of the lid back on the cask after the waste drums have been removed. The guide tool has a neoprene spindle on the tip of the tool to avoid damaging the seal area on the underside of the lid. The 10-160B cask lid-lifting fixture with an integral pintle is attached to the cask lid. The lid-lifting fixture is installed by using either the 140/25-ton overhead bridge crane or the cask preparation station jib crane.

2.5.5.3.2 Cask Unloading Room

Two activities occur in the CUR related to the 10-160B process. The activities are independent of one another and cannot occur at the same time. One activity positions the 10-160B cask in the CUR so that its contents can be transferred to the Upper Hot Cell. The other activity involves placing the shielded insert in the Transfer Cell Shuttle Car to receive a loaded facility canister from the Upper Hot Cell. The shielded insert can only be placed in an empty Transfer Cell Shuttle Car. The shielded insert is placed into the Transfer Cell Shuttle Car using the same process as the RH-TRU 72-B road cask.

The RCTC transports the 10-160B cask to the CUR and positions it under the Upper Hot Cell floor shield plugs. Waste Handling personnel leave the CUR and close the shield door. The CUR shield door and floor shield valve and the Upper Hot Cell shield valve have to be closed before the Upper Hot Cell shield plugs can be removed.

2.5.5.3.3 Upper Hot Cell

Repackaging of the RH Waste drums shipped in the 10-160B shipping package occurs in the Upper Hot Cell. Access is restricted to the Upper Hot Cell when RH Waste is present. Any reentry after RH Waste Handling requires a radiological survey of the Upper Hot Cell area. The Upper Hot Cell equipment, including the Upper Hot Cell crane and its attachments, the overhead-powered manipulator and attachments, master-slave manipulators, and CCTV system, are used for Waste Handling operations inside the Upper Hot Cell.

Operators in the operating gallery use the Upper Hot Cell crane and the Upper Hot Cell shield plug lifting fixtures, while monitoring the CCTVs, to remove the Upper Hot Cell shield plugs and set them aside in the Upper Hot Cell. The crane with a facility grapple is lowered into the CUR and engages the lid-lifting-fixture pintle on the 10-160B lid. The lid is raised into the Upper Hot Cell where radiological contamination surveys are performed on its inside surfaces before it is set aside. The facility grapple on the Upper Hot Cell crane engages the pintle on the 10-160B drum carriage-lifting fixture and lowers it into the CUR where it engages the lifting elements of the upper drum carriage unit. The crane lifts the drum carriage unit into the Upper Hot Cell and moves it to the inspection station. At the inspection station, radiological contamination swipes are taken on the drums and carriage. The swipes are placed in the Upper Hot Cell transfer drawer and transferred into the transfer drawer enclosure in the Operating Gallery for radiological counting. While waiting for radiological counting results, the identification of each drum is verified and compared against the hazardous waste manifest and the WDS. Once the identification of each of the five drums is verified and all are determined to be free of contamination, the carriage is placed at the designated storage location on the Upper Hot Cell floor. The process is repeated for the second drum carriage unit. If any discrepancy in a waste drum’s identity or radiological contamination is detected, both loaded carriages will be reinserted into the 10-160B and the 10-160B unloading process is reversed. If any empty drum carriage units are in the Upper Hot Cell, a maximum of two are placed into the empty 10-160B. The crane picks up the 10-160B container lid and lowers it into the CUR and places it on the empty 10-160B. The Upper Hot Cell shield plugs are reinstalled.

Facility canister(s) have been previously staged in the inspection station of the Upper Hot Cell. The inspection station accommodates two canisters. Typically, the location closest to the Upper Hot Cell viewing window is used. A facility grapple installed on the Upper Hot Cell crane is used to remove the lid of the canister in the inspection station. The bridge-mounted overhead-powered manipulator or the Upper Hot Cell crane is used to lift a drum from the carriage and place it into an empty RH Waste Canister. This process is repeated two more times until three drums are in a RH Waste Canister. The overhead-powered manipulator or the Upper Hot Cell crane is used to install and secure the lid to the filled RH Waste Canister. The canister is ready to be moved either to the Transfer Cell or to a storage location until the Transfer Cell is available to receive a facility canister. This canister loading process is repeated until all drums have been removed from the two carriages.

2.5.5.3.4 Transfer Cell

The Transfer Cell Shuttle Car with a shielded insert, which is similar to an RH-TRU 72-B cask but has a larger inside diameter, is positioned so that the shielded insert is directly below the Upper Hot Cell Shield Valve. A filled facility canister is positioned over the Upper Hot Cell shield valve. With the shield valve open, the facility canister is lowered through the shield valve port into the shielded insert. The guide tubes ensure that the facility canister is properly positioned during the lowering process. The Upper Hot Cell crane facility grapple is disengaged from the facility canister pintle and lifted back inside the Upper Hot Cell. CCTV cameras and load cells on the crane are used to verify disengagement. When the open port of the Upper Hot Cell shield valve is clear and the hoist is at its preset high limit, the shield valve is closed. The Transfer Cell Shuttle Car moves one facility canister in a shielded insert from below the Upper Hot Cell shield valve to below the Transfer Cell ceiling shield valve.

2.5.5.3.5 Facility Cask Loading Room

The processing of a facility canister is the same as processing an RH Waste Canister, with the following exceptions:

- The shielded insert does not have an inner lid to remove.
- Identity verification is not performed on a facility canister because verification will have already been performed in the Upper Hot Cell.
- A facility canister does not have to undergo radiological surveying because it will have been previously completed in the Upper Hot Cell.

2.5.5.4 Waste Shaft Collar Room

RH Operations verifies that the Waste Shaft Conveyance is at the Waste Shaft Collar before moving the RH Waste Cask into the Waste Shaft Collar Room.

With the Waste Shaft Conveyance properly positioned, the gates are opened, the pivot rails are positioned, the FCLR shield doors are opened, and the FCTC transports the RH Waste Cask onto the Waste Shaft Conveyance. The FCLR shield doors are closed. The Waste Shaft Conveyance is lowered to the Waste Shaft Station at the disposal horizon.

2.5.5.5 Waste Shaft Station

When the Waste Shaft Conveyance has stopped at the disposal horizon, the Waste Shaft Station gates are opened, the pivot rails are positioned, a power cable is connected, and the FCTC moves from the conveyance (Figure 2.5-26) into the S-400/E-140 intersection. The 41-ton diesel forklift positions its tines

so that they are inserted into the lower set of forklift pockets of the RH Waste Cask and then lifts the RH Waste Cask from the FCTC. The 41-ton forklift transports the RH Waste Cask to the disposal location at a speed of approximately 3 to 4 mph. In the event of UG contamination a contaminated zone boundary and a radiation buffer area will be established. The waste will be transferred to a different vehicle across the contaminated zone / radiation buffer area boundary. Empty Facility Casks/LWFC destined for the surface will be surveyed and decontaminated if necessary.

2.5.5.6 Underground Remote-Handled Waste Disposal Area

There are two types of RH emplacement machines, the HERE and the HEM. Both the HERE and the HEM are capable of aligning the RH Waste Cask with the borehole and emplacing RH Waste Canisters. The HERE may also be used to retrieve RH Waste Canisters.

2.5.5.6.1 Horizontal Emplacement Retrieval Equipment Process

At the RH Waste borehole disposal location, the 41-ton diesel forklift places the RH Waste Cask on the WTM, which will have been previously aligned with the borehole. The cask is moved forward to mate with the shield collar and the transfer carriage is advanced to mate with the RH Waste Cask rear shield valve. The rear shield valve is opened, and after the transfer mechanism makes contact with the pintle on the RH Waste Canister, the front shield valve is opened, and the transfer mechanism extends to push the canister into the borehole (Figure 2.5-27). After retracting the transfer mechanism into the RH Waste Cask, the front shield valve is closed. The transfer carriage is retracted and a diesel forklift places a shield plug on the shield plug carriage on the staging platform. The transfer mechanism pushes the shield plug into the RH Waste Cask. The front shield valve is opened and the shield plug is pushed into the borehole (Figure 2.5-28).

The transfer mechanism is retracted into its housing and the RH Waste Cask shield valves are closed. The shield plug carriage and the RH Waste Cask are removed from the emplacement machine. The emplacement machine is now available for transfer to another location.

During combined CH and RH disposal operations, boreholes are drilled into the ribs in such a manner as to not affect CH disposal operations. Because of the length of the HERE, CH Waste cannot be transported around the HERE when the HERE is set up for emplacement in a borehole. CH Waste disposal and RH Waste Canister emplacement do not occur in the same room at the same time.

2.5.5.6.2 HEM Process

The HEM is driven to an RH Waste emplacement borehole, where the HEM is connected to its control panel. The HEM is lifted off its transport wheels and aligned with the borehole using its four integral leveling jacks. The laser alignment operator tool may be used if needed to assist with alignment of the HEM to the borehole.

Once the HEM is aligned, lasers located on the outriggers near the shield valve assembly paint dots on the rib on either side of the borehole. Marks may be made on the dots as needed to help evaluate whether realignment is needed after the loaded LWFC is placed onto the cask carriage. Once aligned, the shield valve assembly is extended into the borehole countersink.

The LWFC is placed on the HEM cask carriage and moved to contact the shield collar using the cask carriage rails' linear roller bearings and cask carriage hydraulic cylinder. Proximity sensors mounted on the shield valve assembly are used to detect the LWFC front valve when it is mated to the shield collar.

After the cask is in place, the shield valve assembly uses four rotating hydraulic locking clamps to secure the shield valve collar to the LWFC.

The WTM is moved into contact with the LWFC rear shield valve using the carriage rails, linear roller bearings, and hydraulic cylinder. Proximity sensors mounted on the WTM cylindrical housing are used to detect the LWFC when it is mated to the rear shield valve. After the WTM is in contact with the LWFC four rotating hydraulic locking clamps are used to secure the WTM to the LWFC.

With all shielding in place, the WTM is controlled in conjunction with LWFC and shield valve assembly gate configurations to emplace an RH Waste Canister into the borehole. The WTM uses a five-stage hydraulic ram system enclosed in its housing to push the Waste Canister from the LWFC into the borehole. Upon completion of the emplacement, the shield valve assembly gate is closed and the LWFC is removed from the HEM.

After removal of the LWFC, the shield plug carriage with a shield plug is placed on the cask carriage. The cask carriage is then extended toward the shield valve assembly and the locking clamps rotated to secure the shield valve to the shield plug carriage. The WTM is then extended to contact the shield plug carriage and the bottom locking clamps rotate to secure the WTM to the shield plug carriage. An optional securing bracket is installed as needed for reinforcement on the WTM. The WTM hydraulic cylinder is then extended to engage the shield plug and push it toward the shield valve. When the shield plug is moved to within approximately 6 inches of the shield valve surface, the shield valve is opened and the shield plug is emplaced in the borehole.

Upon completion of the shield plug emplacement, the shield plug carriage is removed and the shield valve assembly is retracted from the borehole. The leveling jacks are fully retracted until the HEM is supported on its four drive tires. The HEM can be driven using its portable drive-control box to the next emplacement borehole to be reconfigured for waste emplacement.

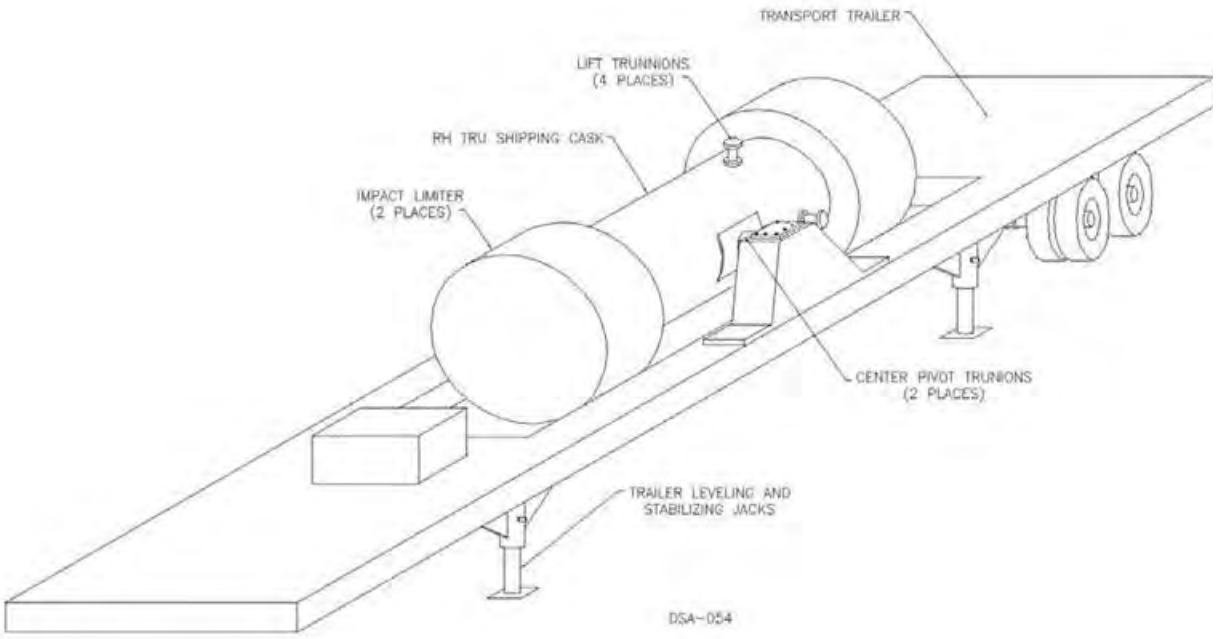

Figure 2.5-1. Remote-Handled Transuranic 72-B Shipping Package on Trailer

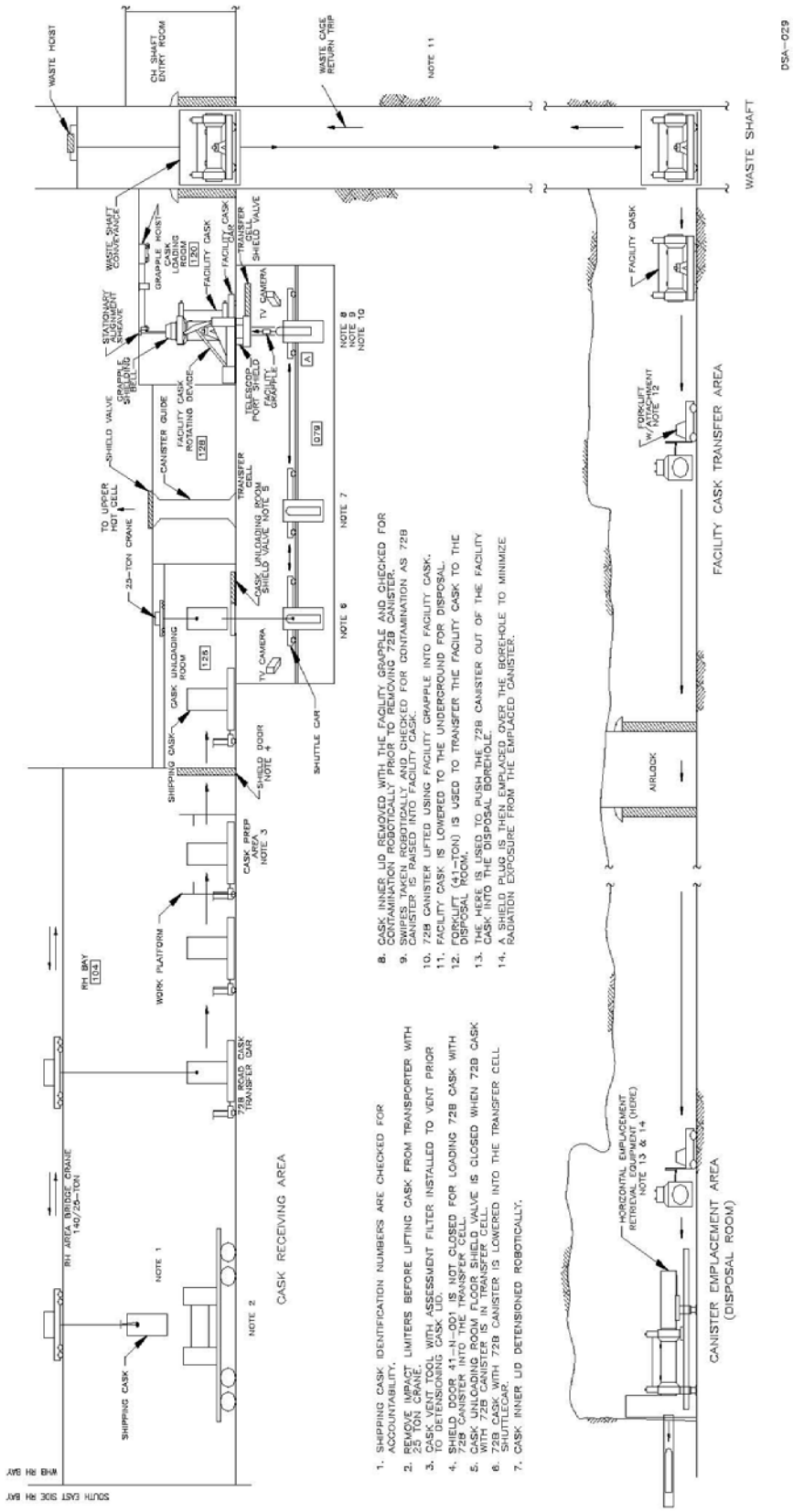

Figure 2.5-2. Remote-Handled Transuranic 72-B Remote-Handled Waste Handling Process

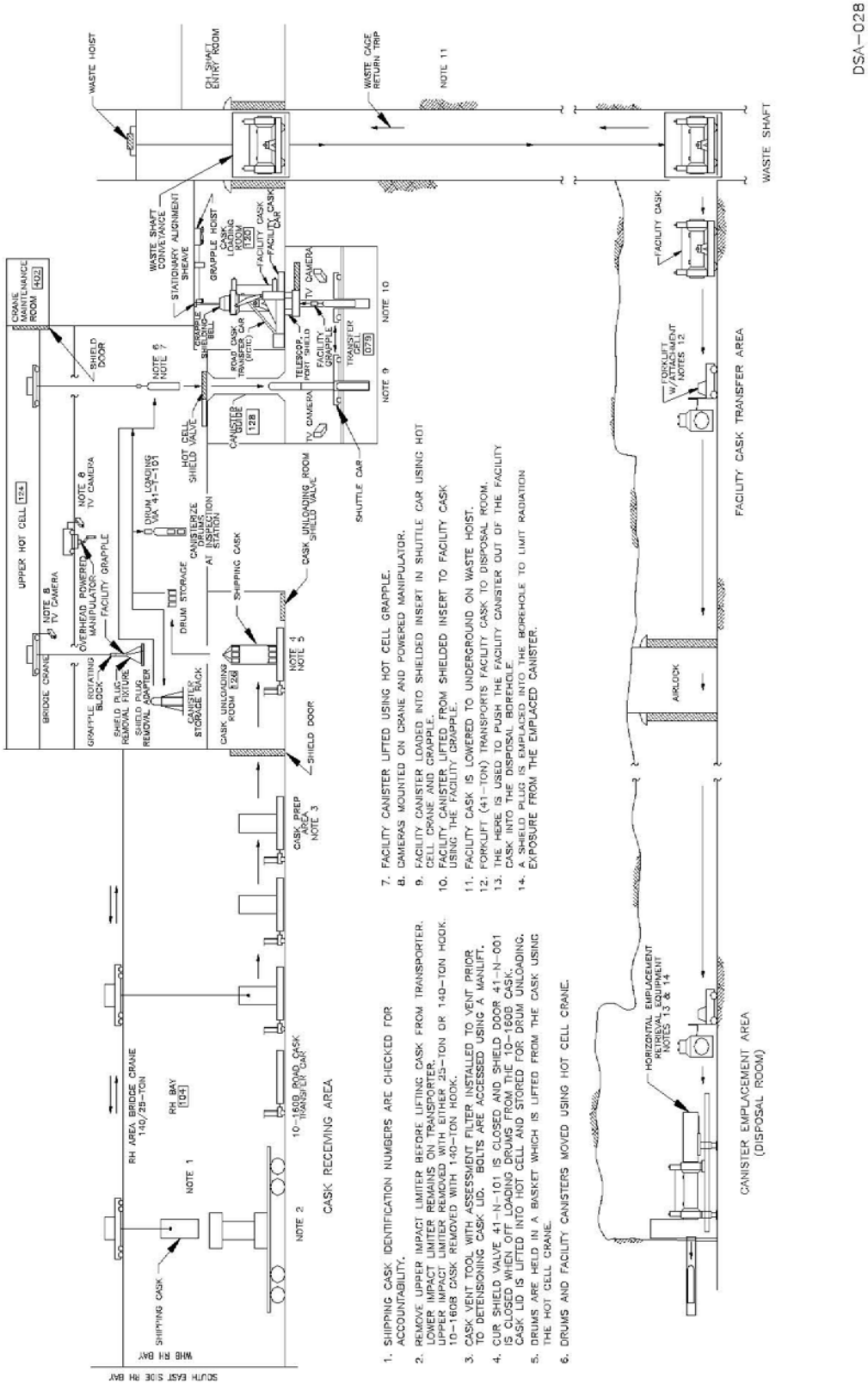

Figure 2.5-3. 10-160B Remote-Handled Waste Handling Process

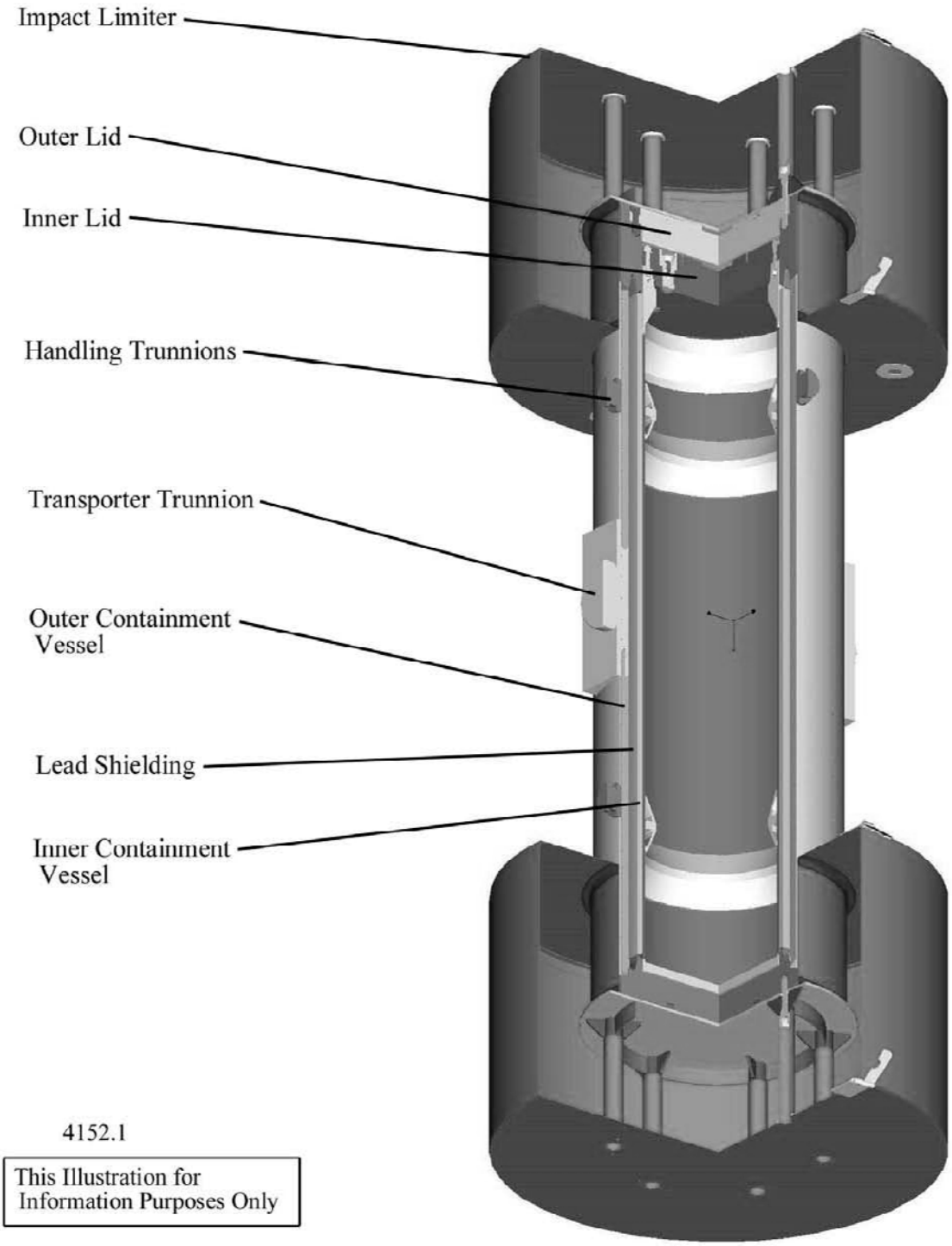

Figure 2.5-4. Remote-Handled Transuranic 72-B Shipping Container

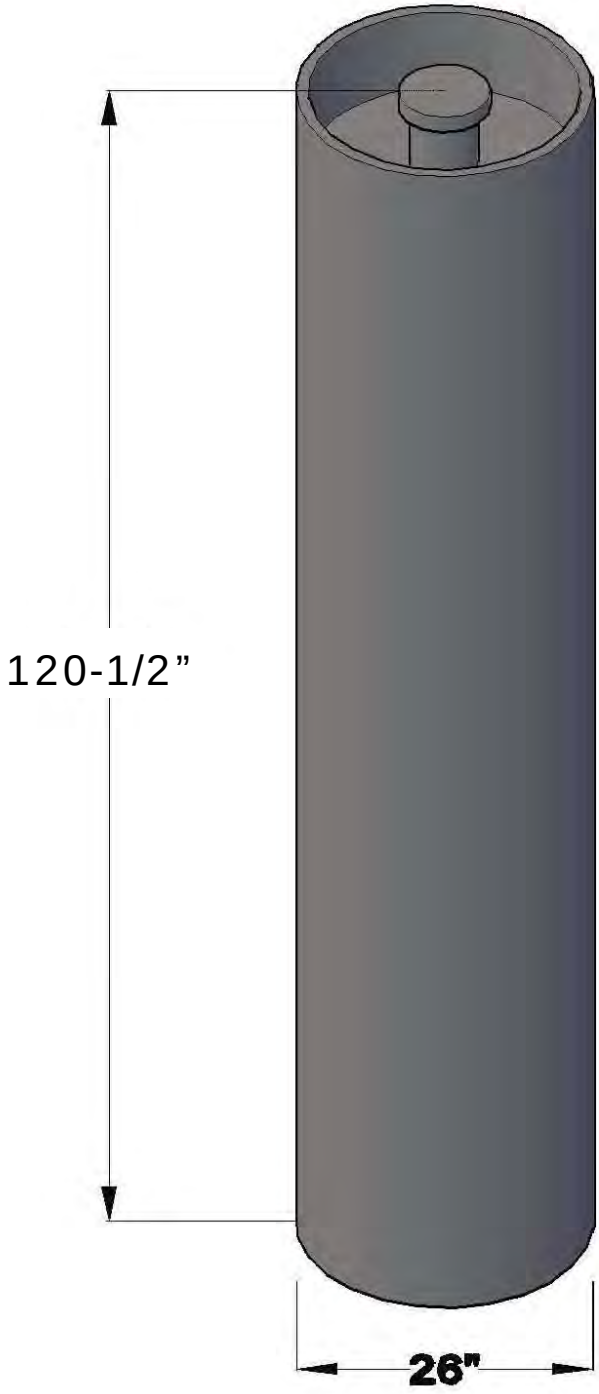

Figure 2.5-5. Remote-Handled Waste Canister

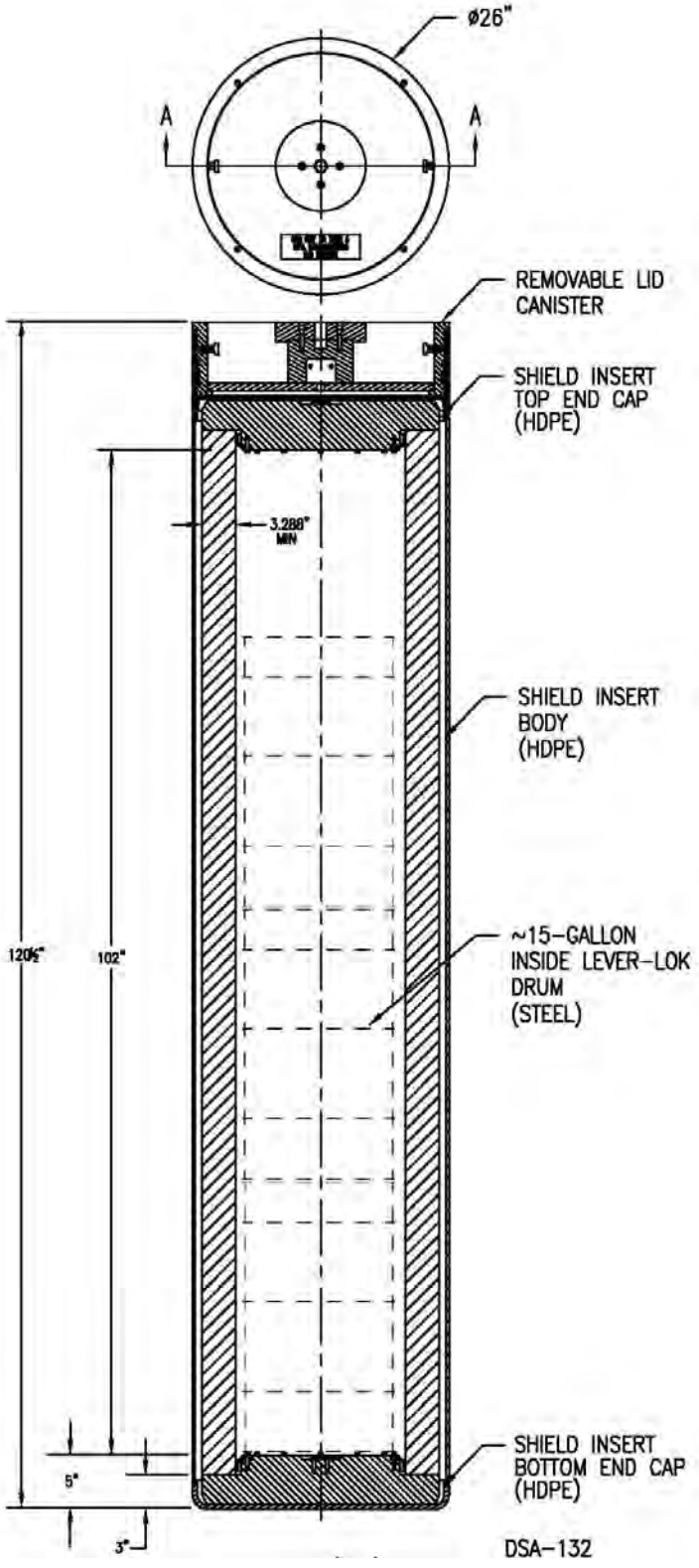

Figure 2.5-6. Neutron-shielded Canister NS15

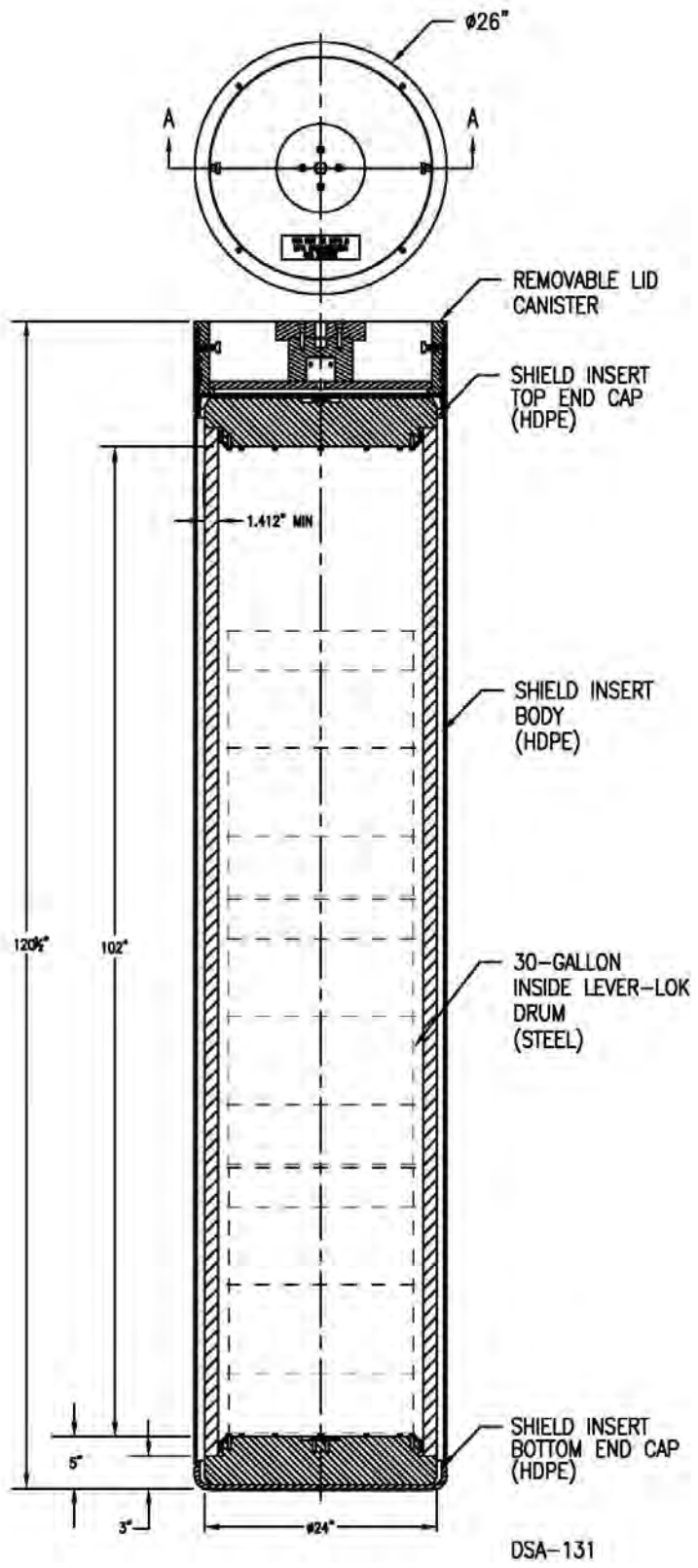

Figure 2.5-7. Neutron-shielded Canister NS30

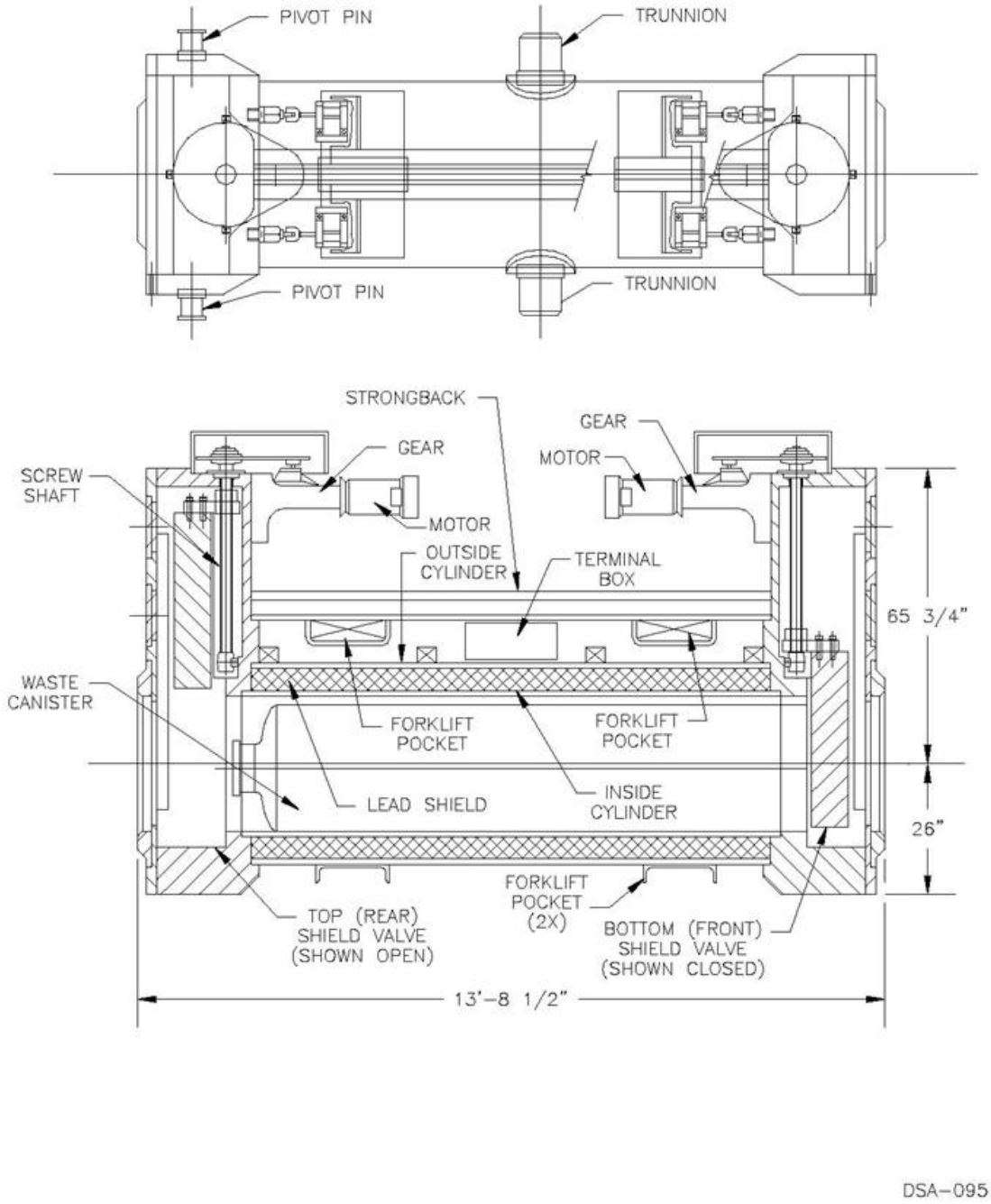

Figure 2.5-8. Facility Cask (a Remote-Handled Waste Cask)

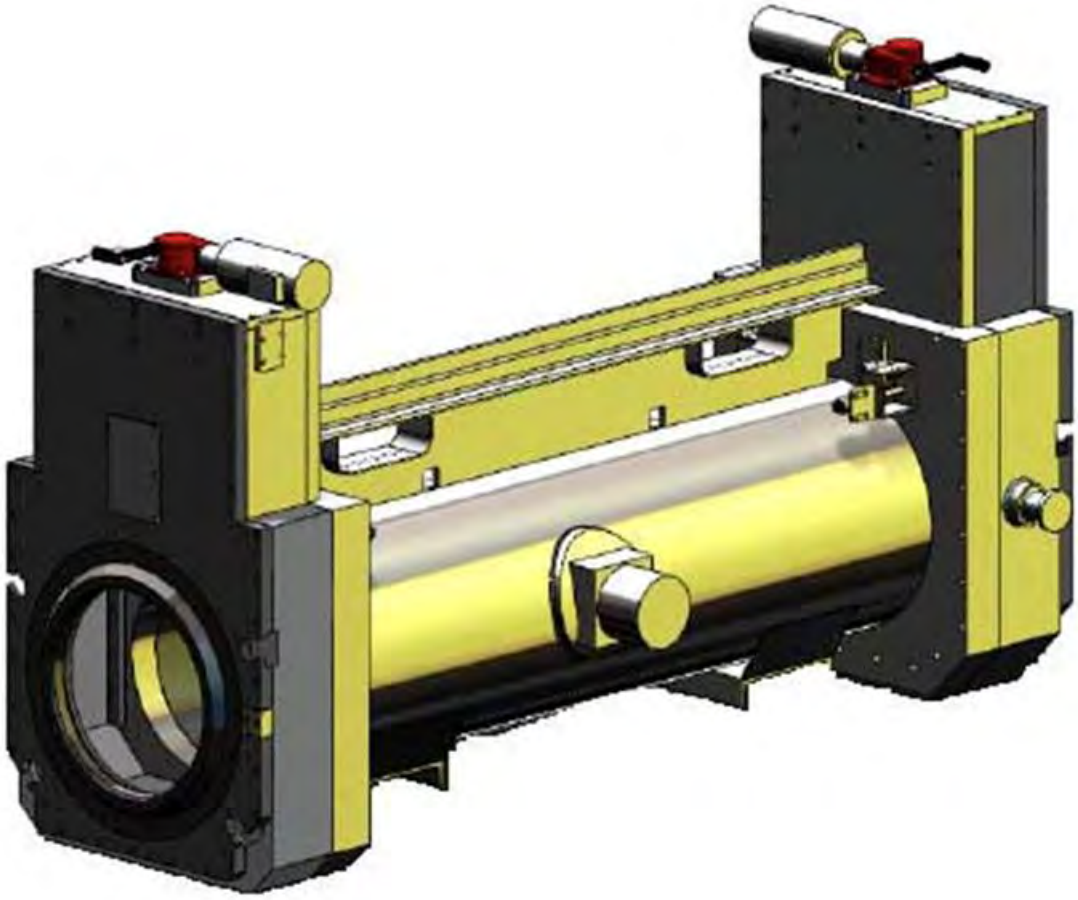

Figure 2.5-9. Light Weight Facility Cask (a Remote-Handled Waste Cask)

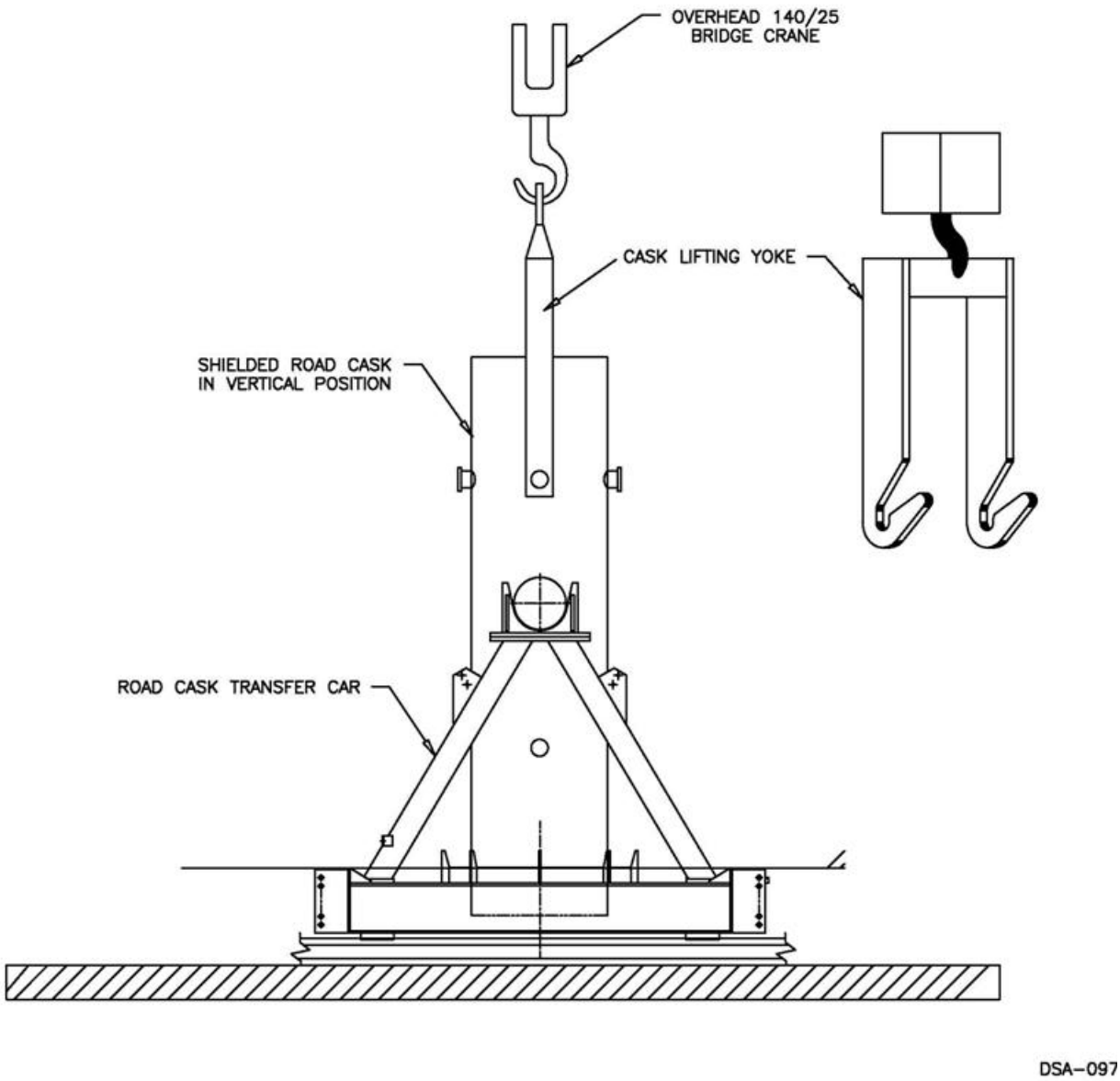

Figure 2.5-10. 140/25-ton Crane Cask-lifting Yoke

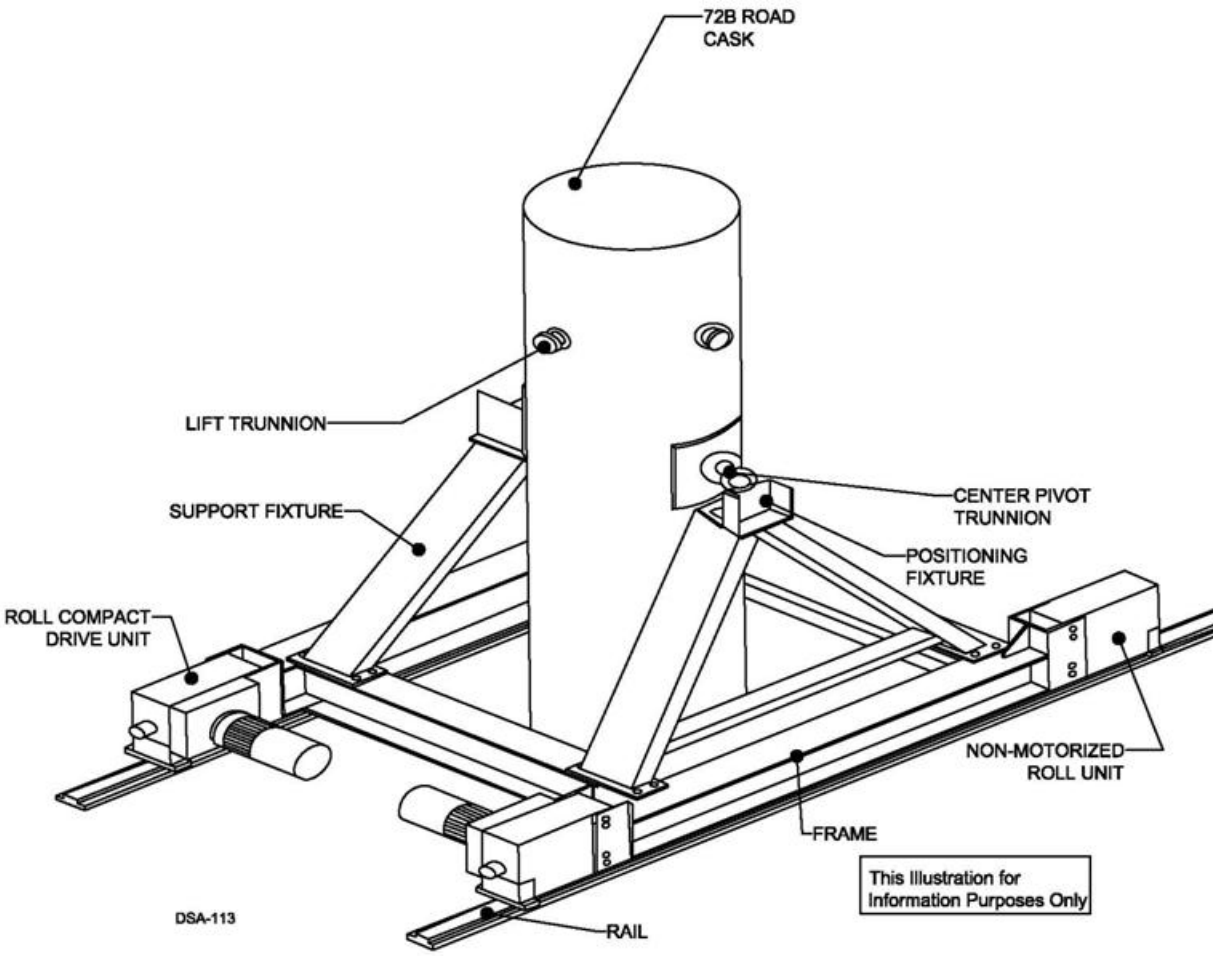

Figure 2.5-11. Remote-Handled Transuranic 72-B Shipping Package on Transfer Car

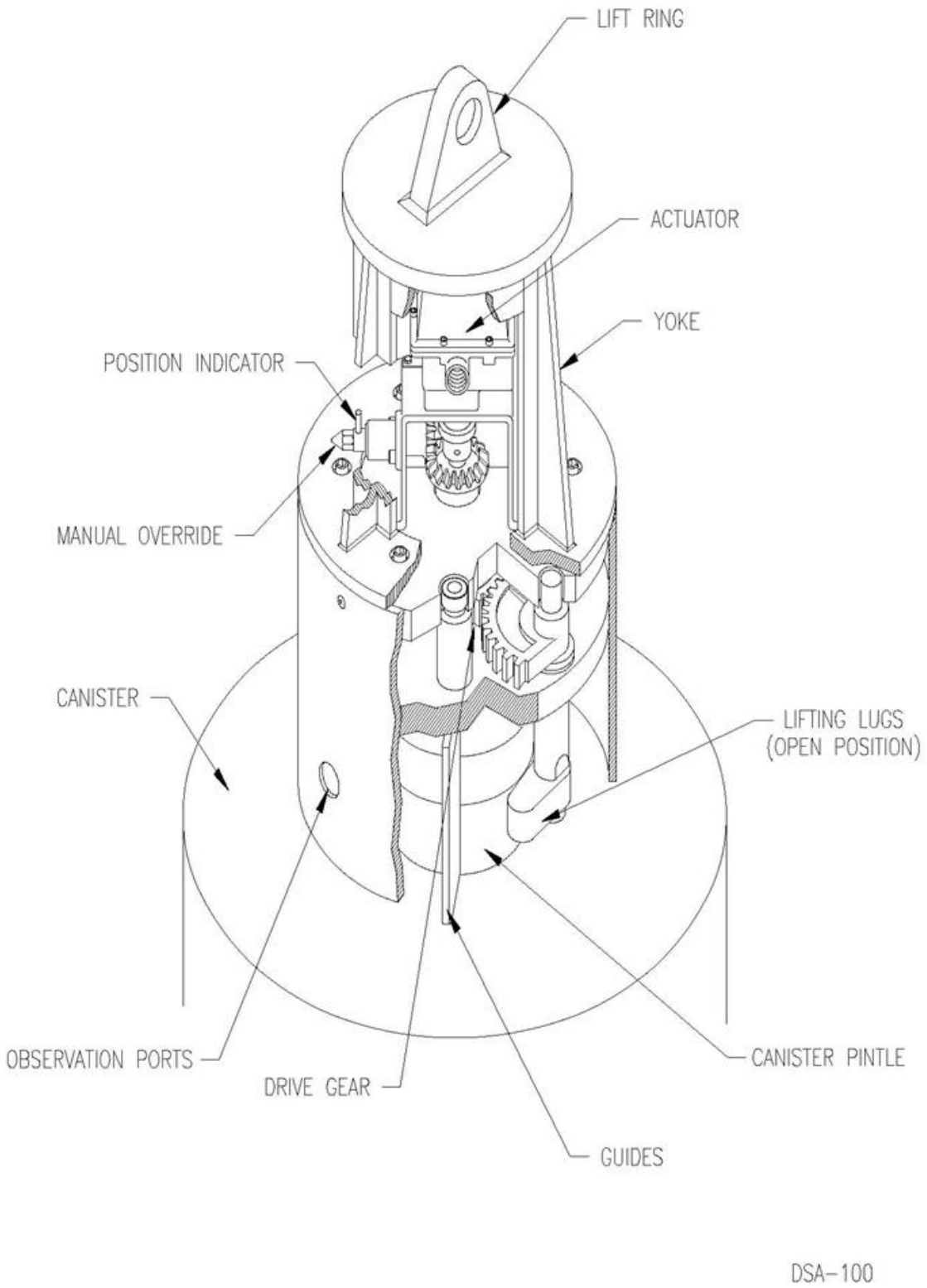

Figure 2.5-12. Facility Grapple

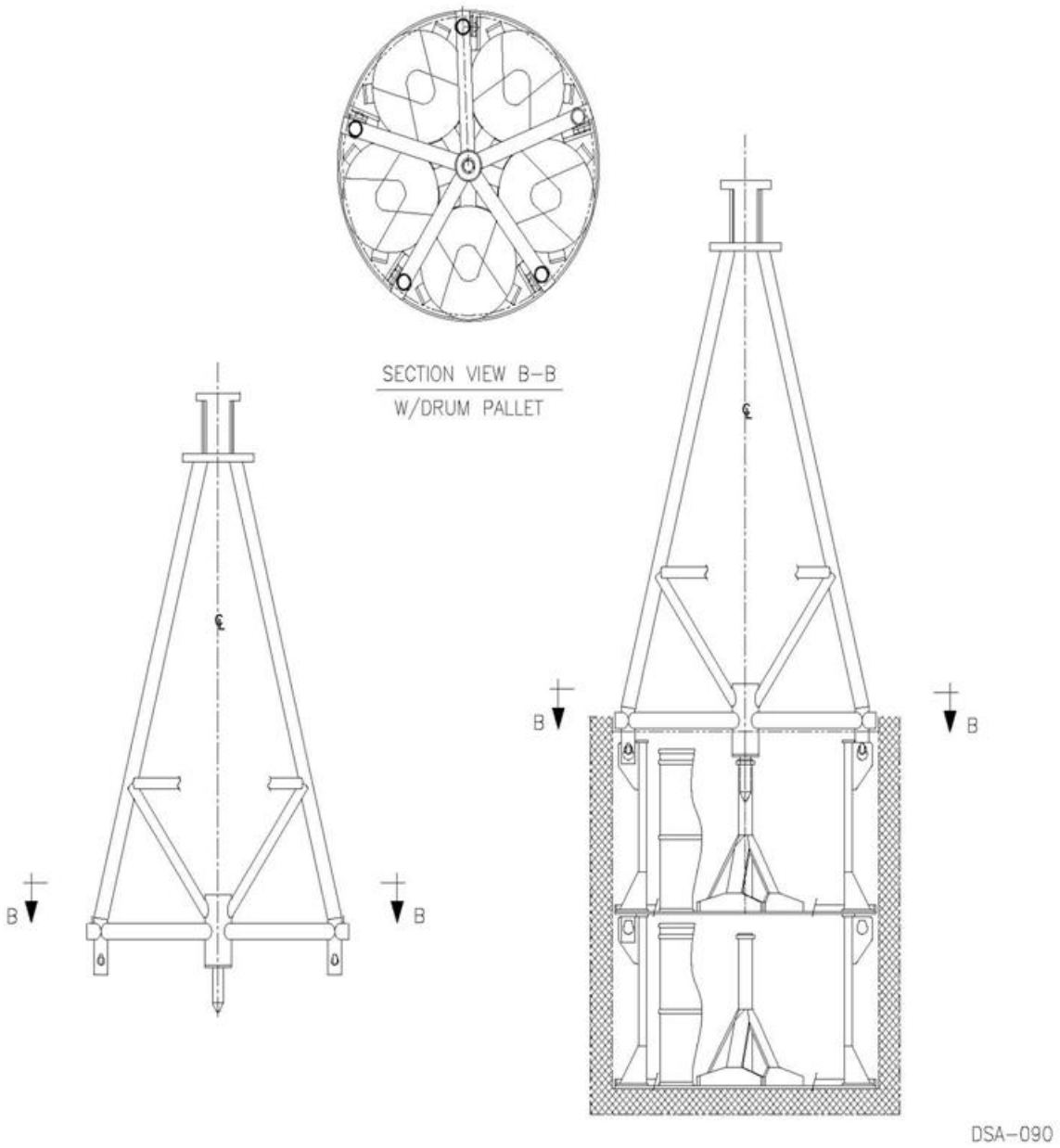

Figure 2.5-13. 10-160B Drum Carriage Lifting Fixture

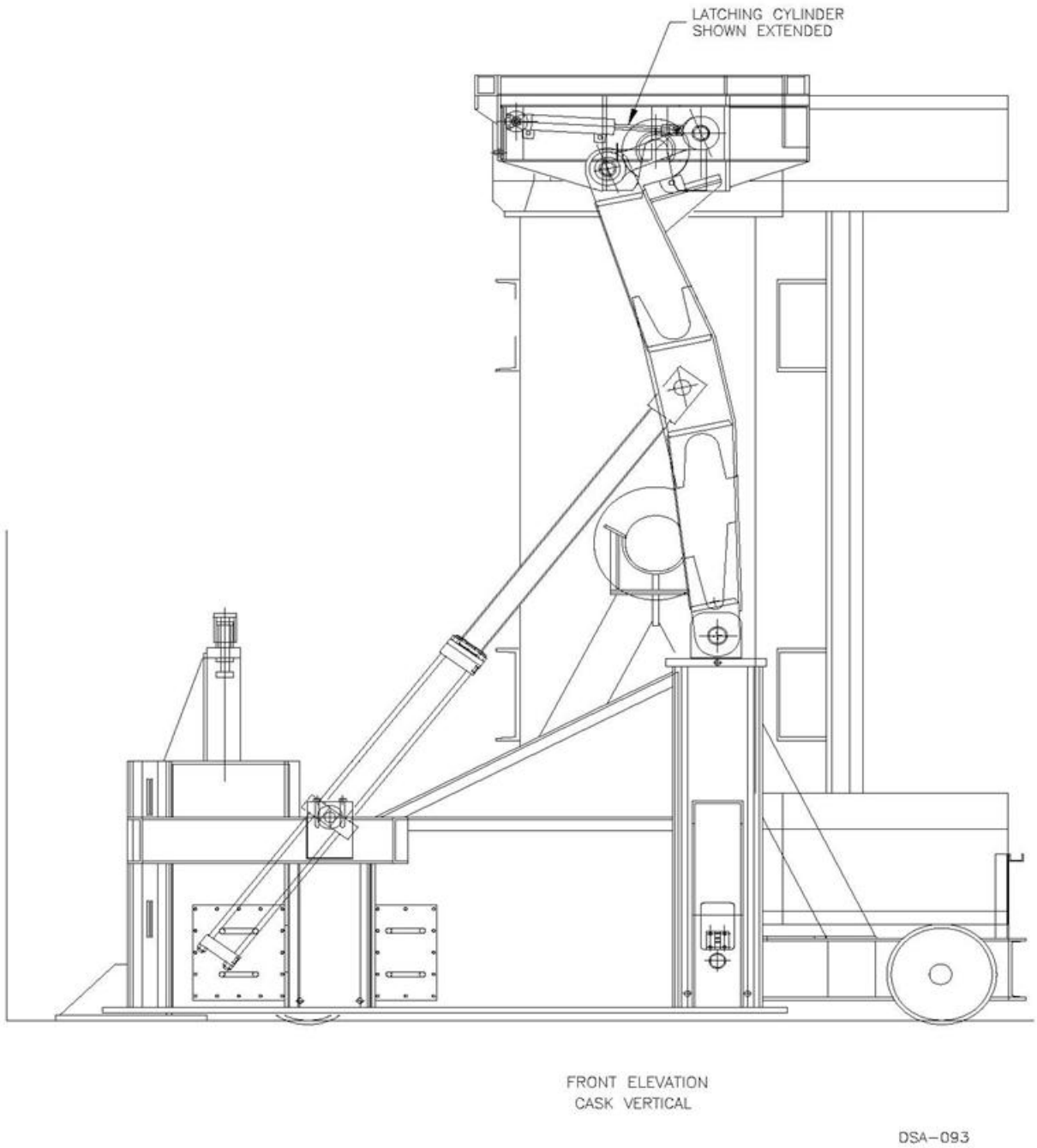

Figure 2.5-14. Facility Cask Rotating Device

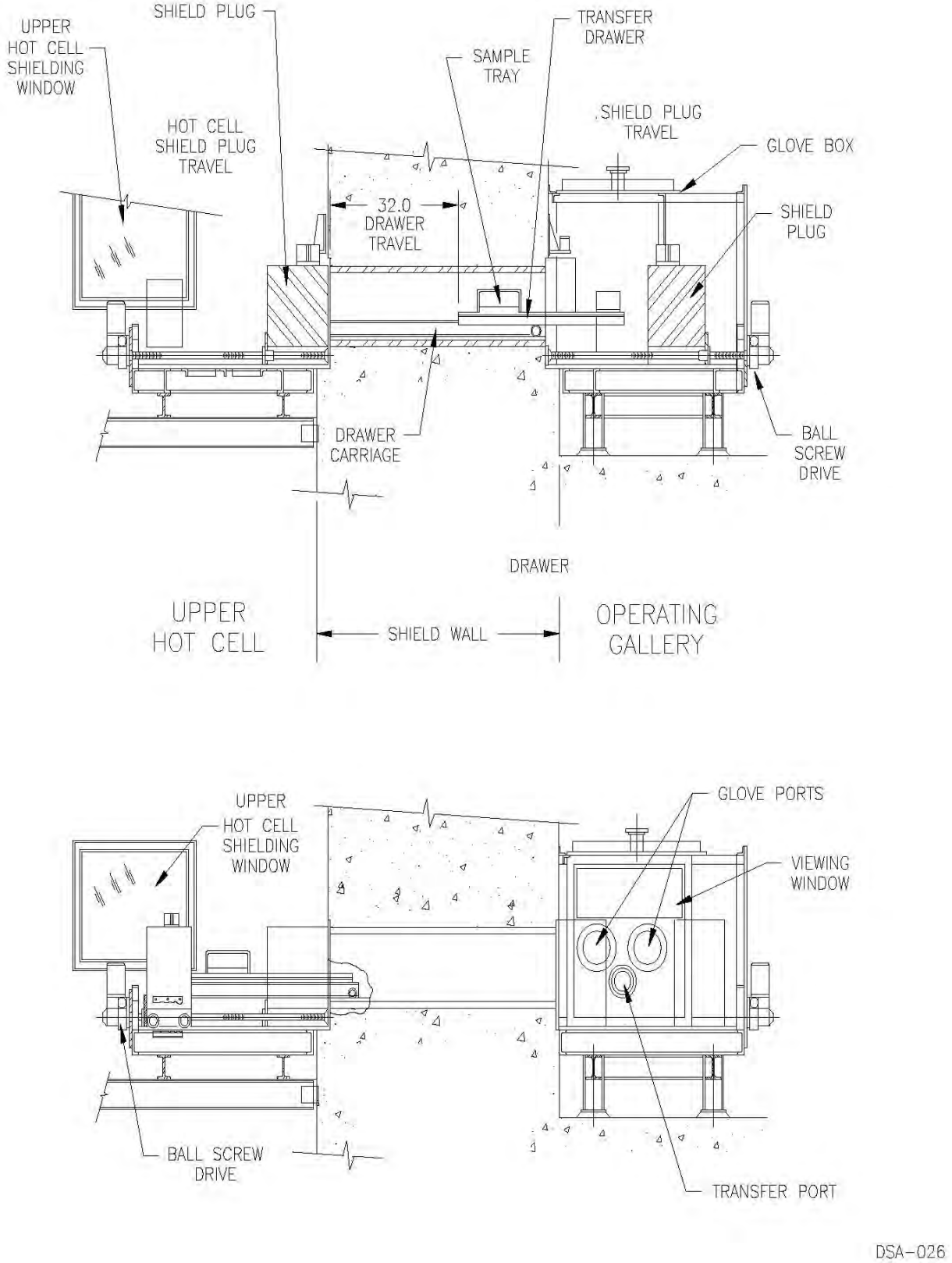

Figure 2.5-15. Upper Hot Cell Transfer Drawer

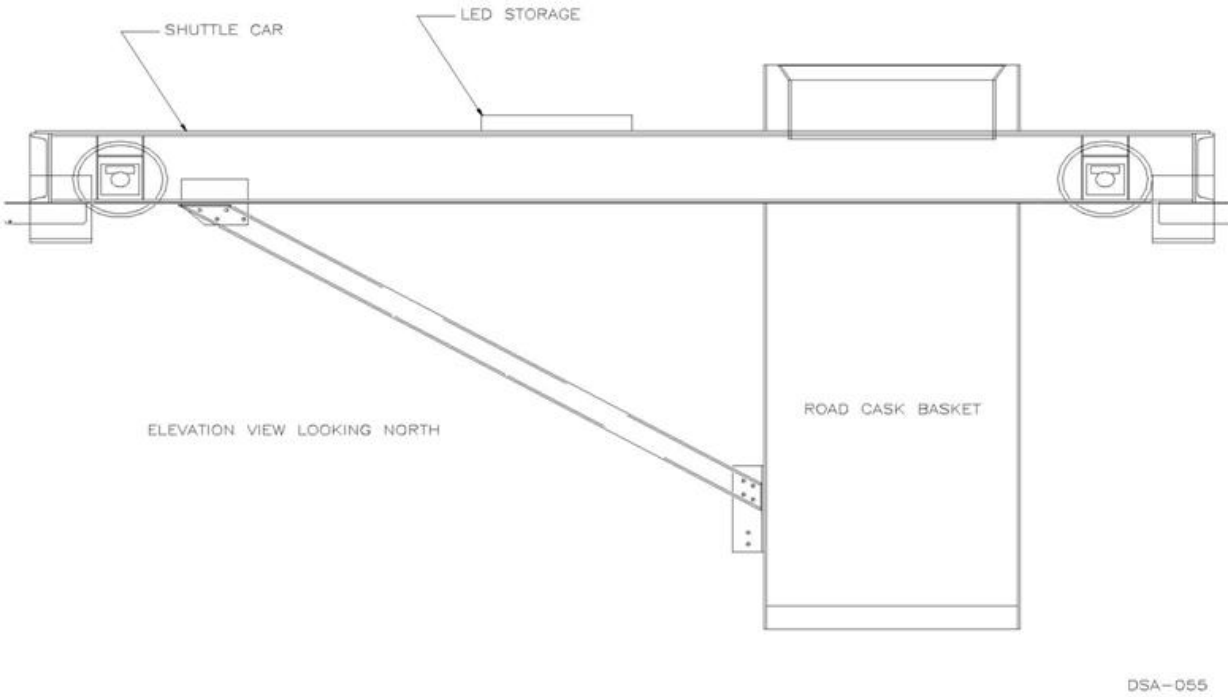

Figure 2.5-16. Transfer Cell Shuttle Car

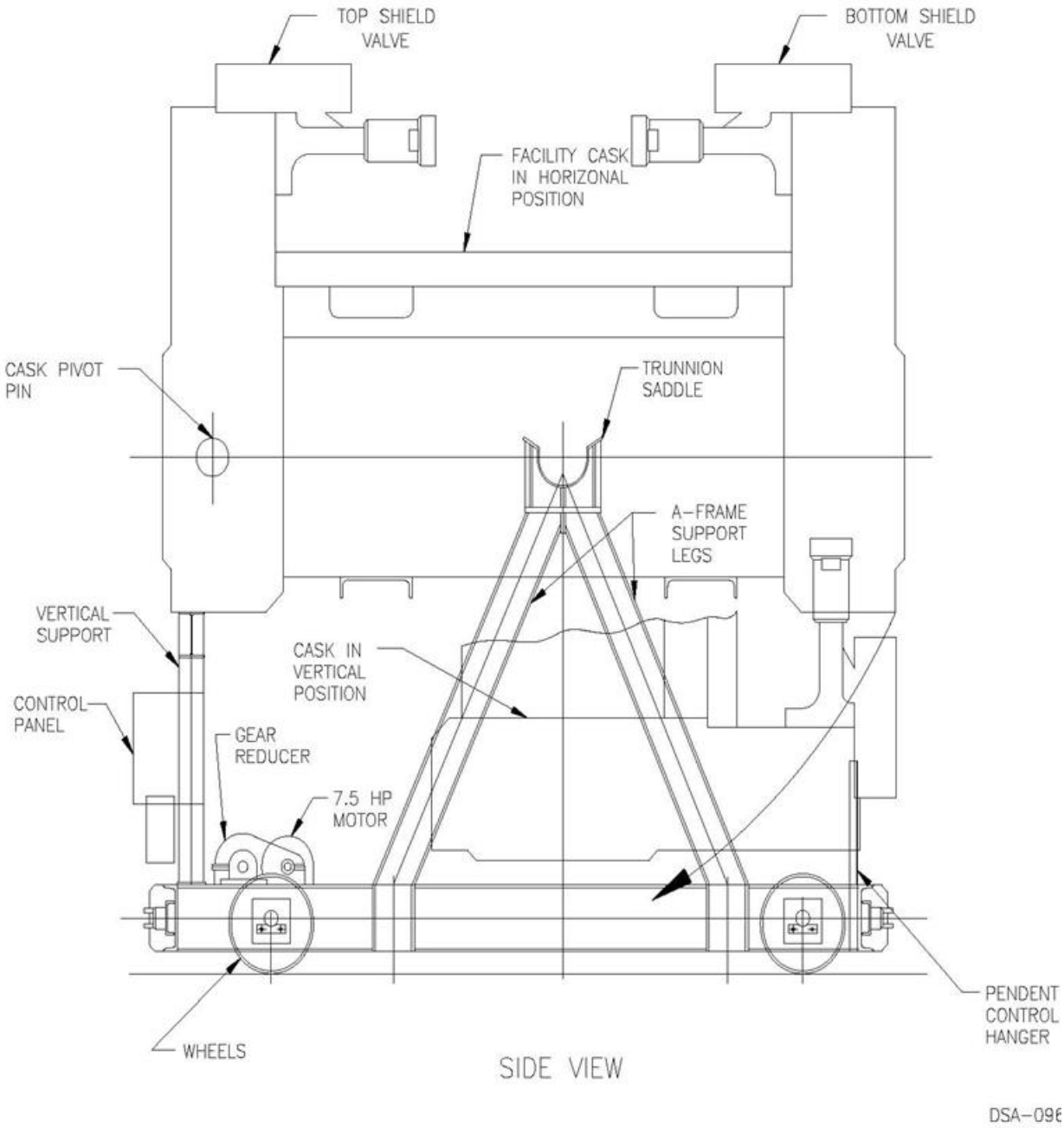

Figure 2.5-17. Facility Cask Transfer Car

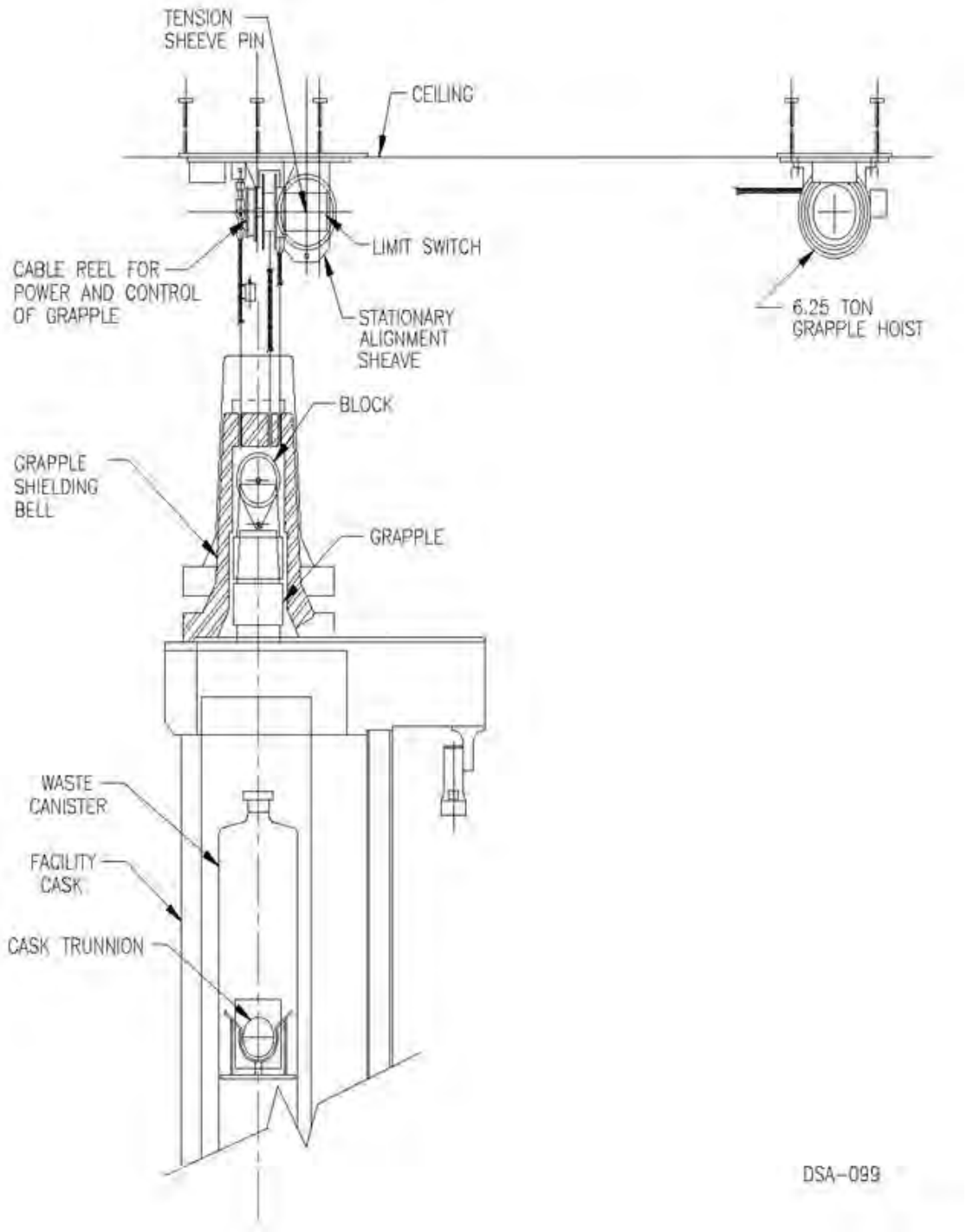

Figure 2.5-18. 6.25-ton Facility Cask Loading Room Grapple Hoist

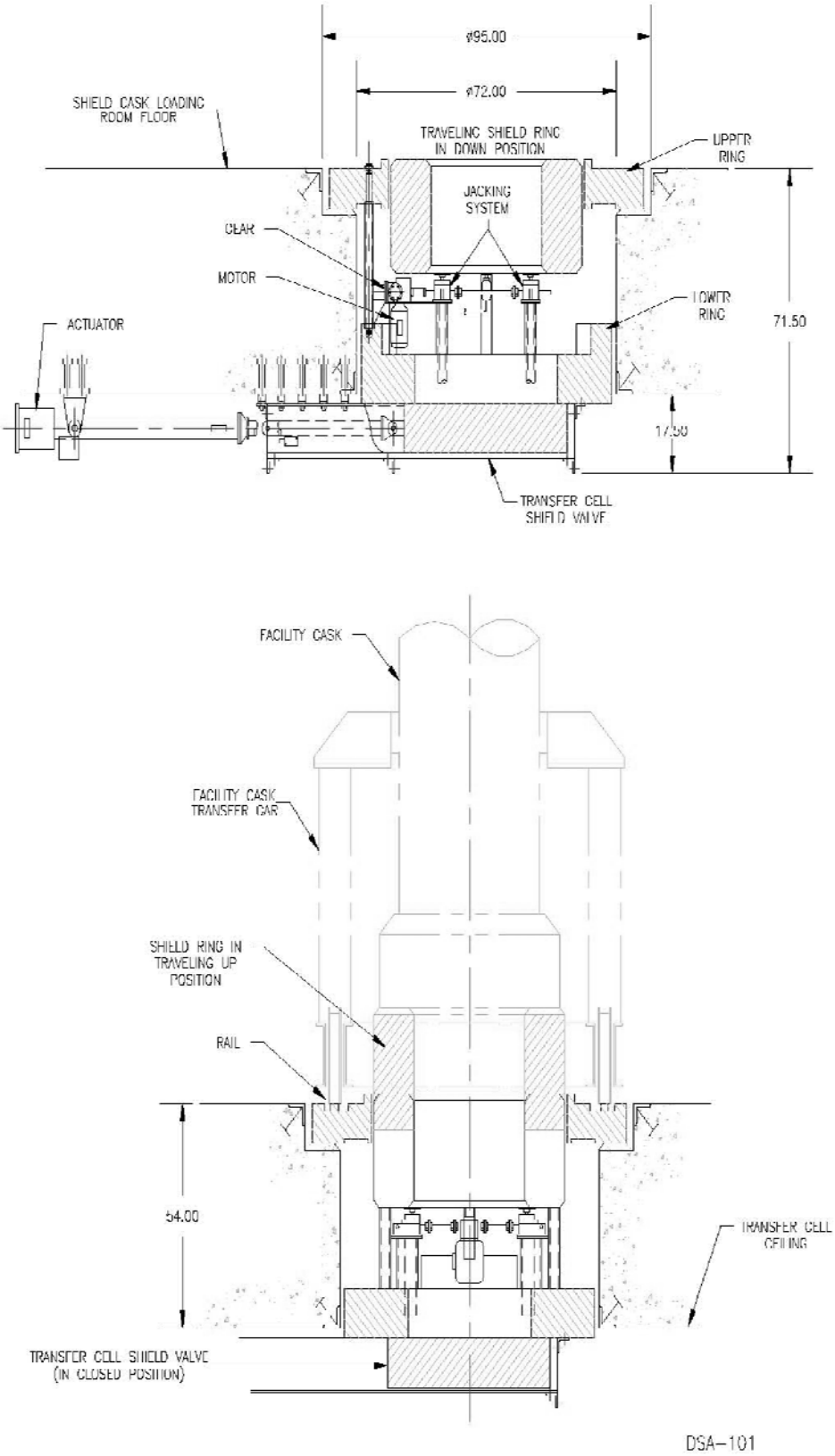

Figure 2.5-19. Telescoping Port Shield

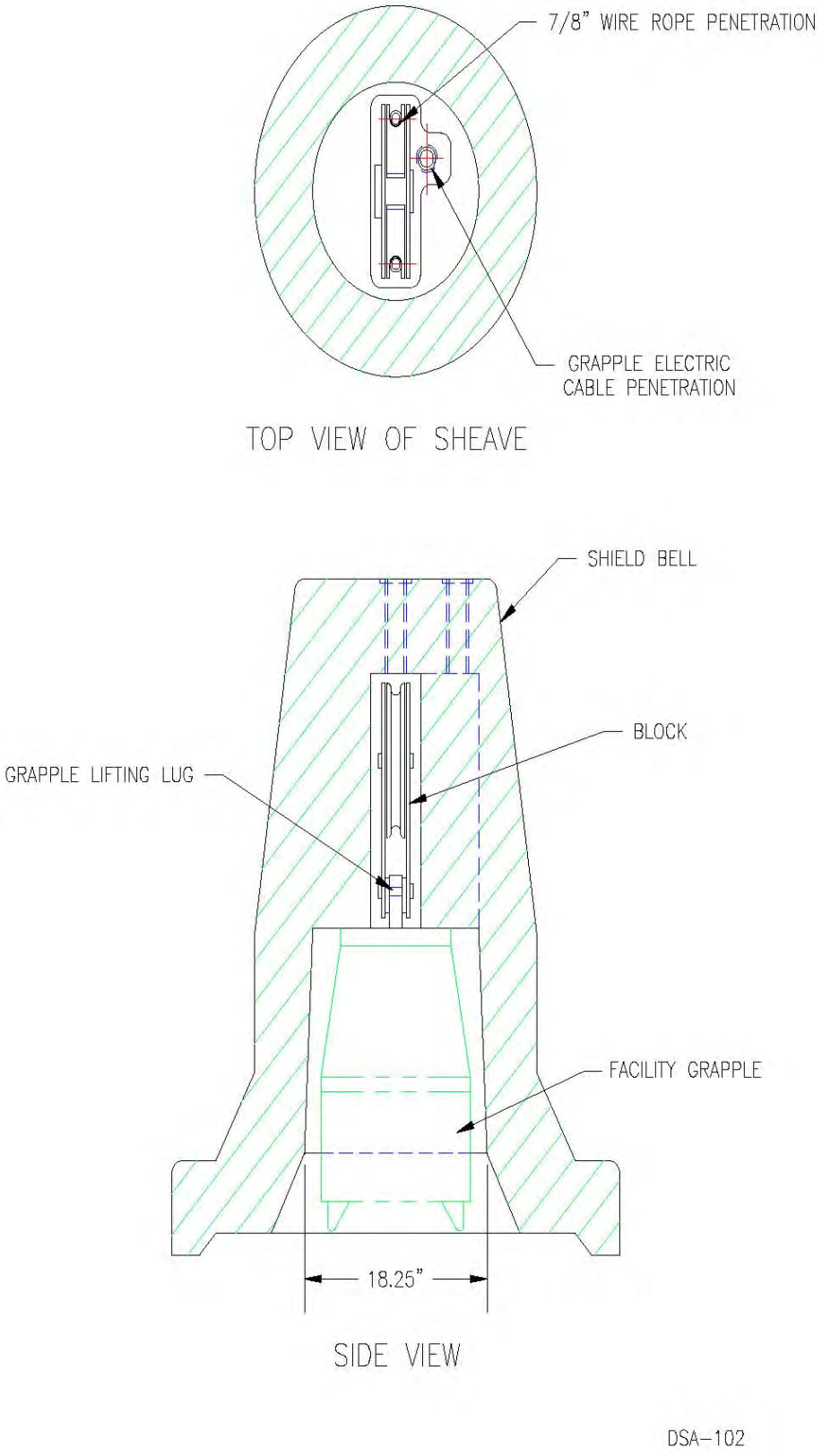

Figure 2.5-20. Bell Shield and Block

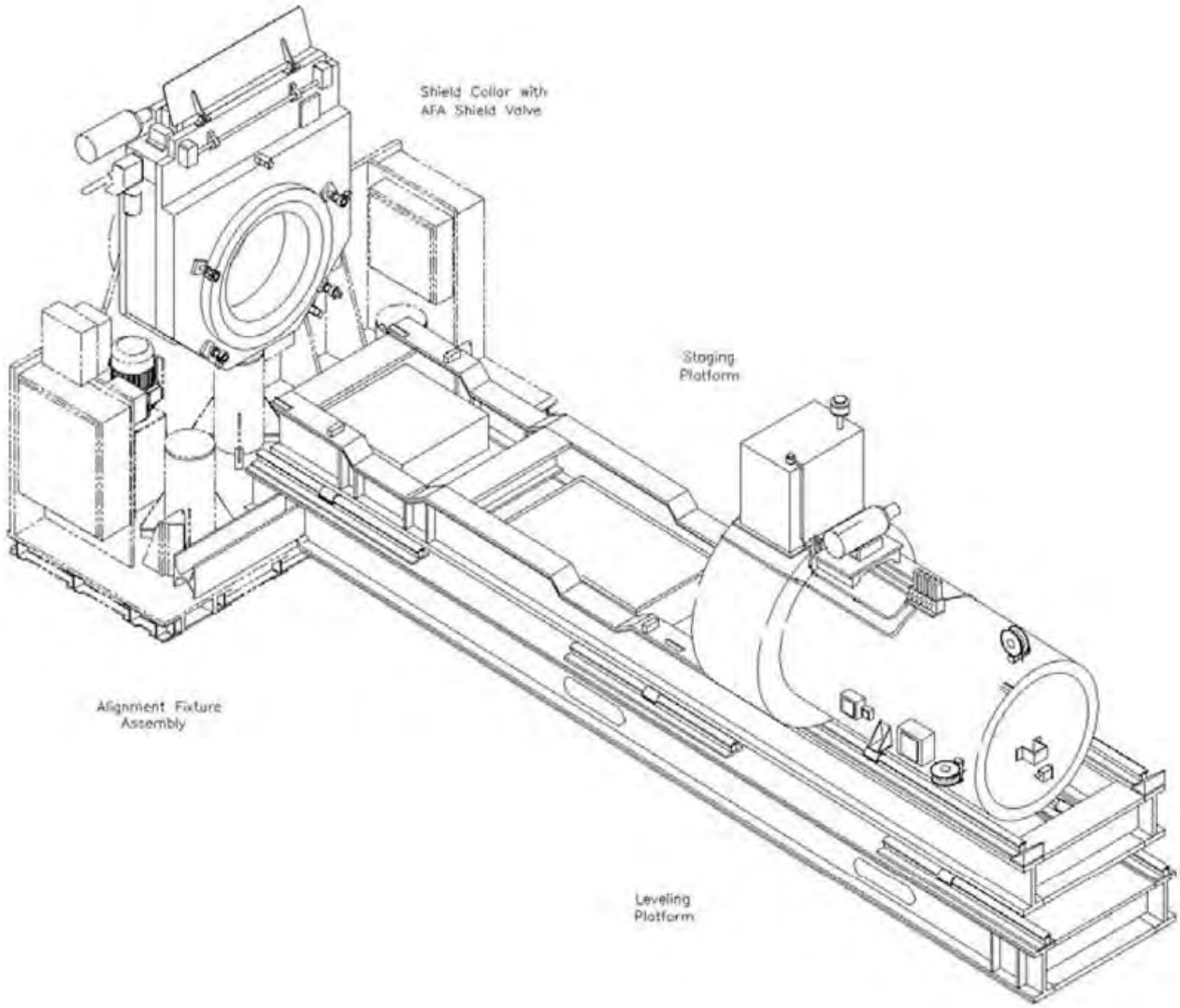

Figure 2.5-21. Waste Transfer Machine Assembly Installed on the Alignment Fixture

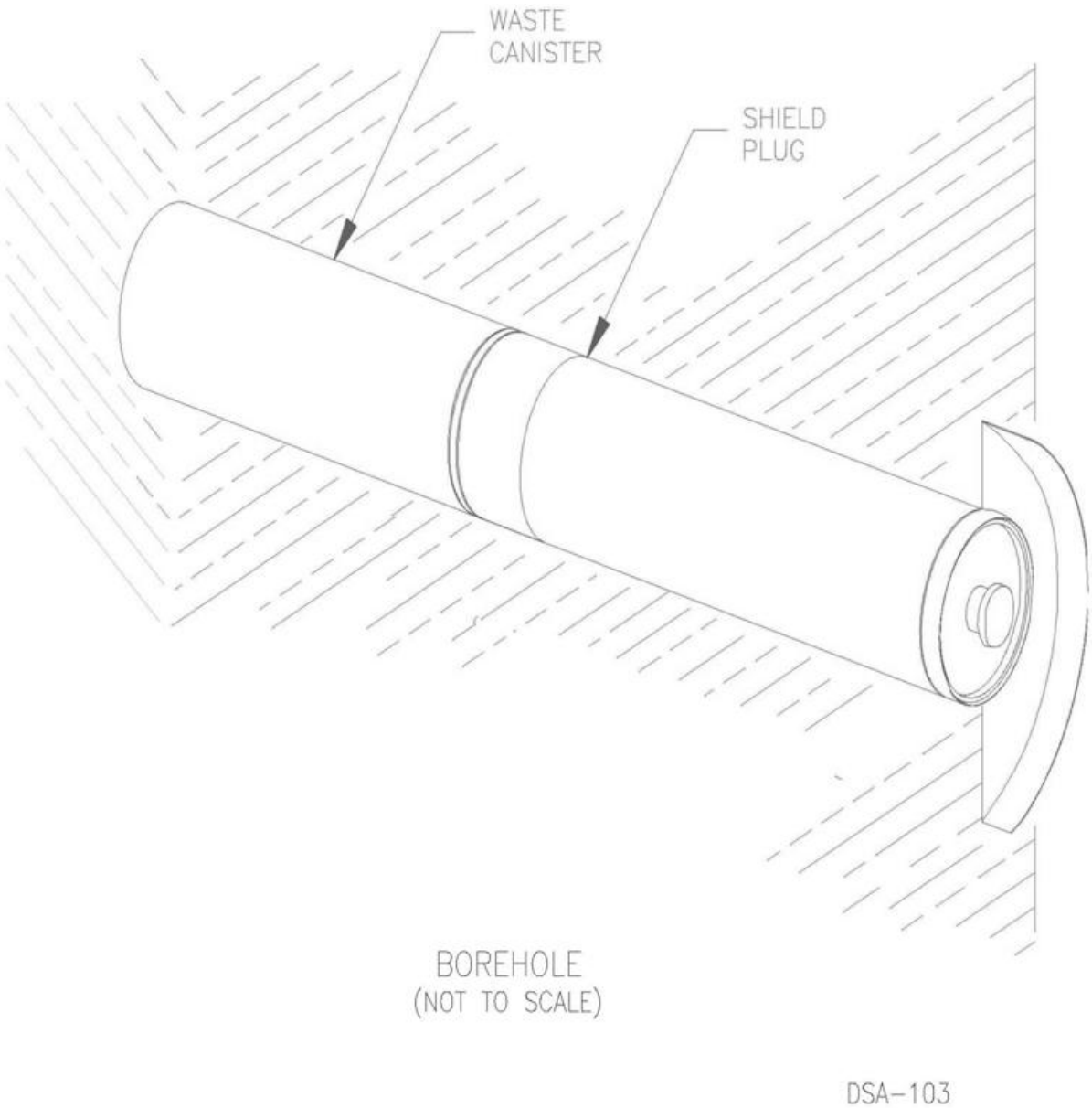

Figure 2.5-22. Remote-Handled Waste Emplacement Configuration

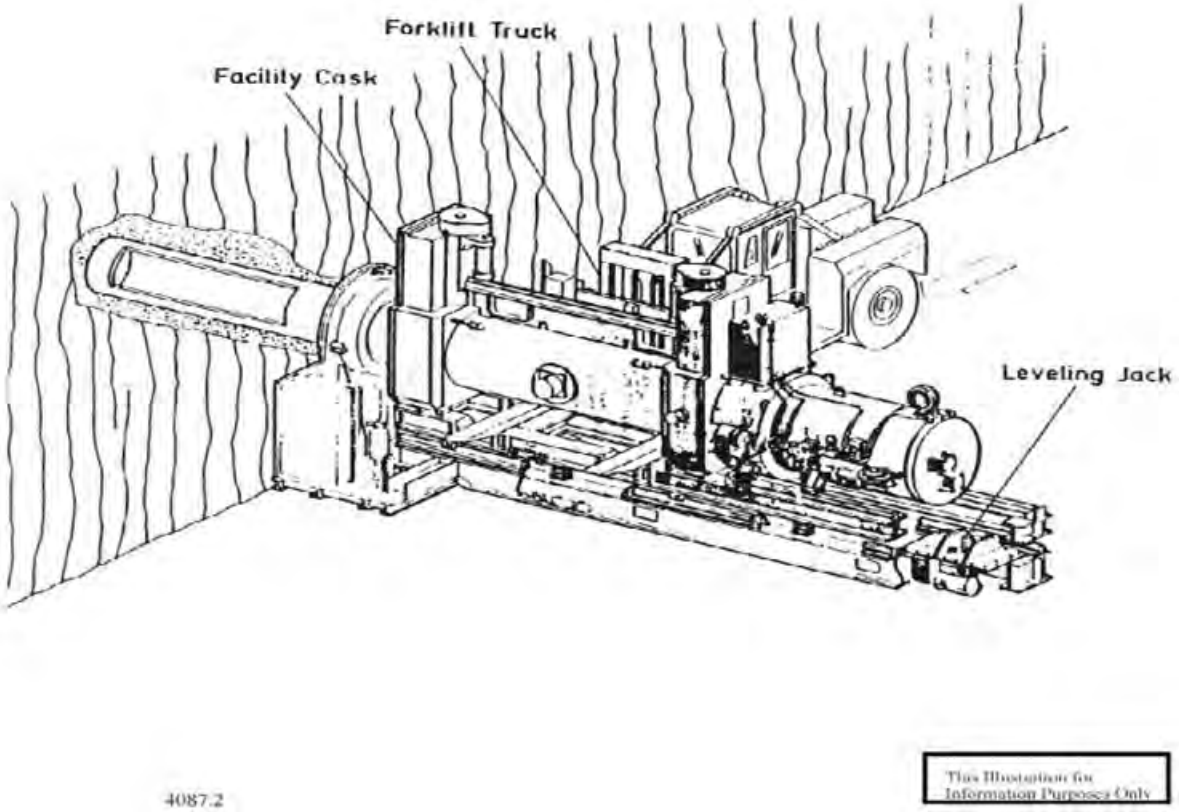

DSA-118

Figure 2.5-23. Facility Cask Installed on the Waste Transfer Machine Assembly

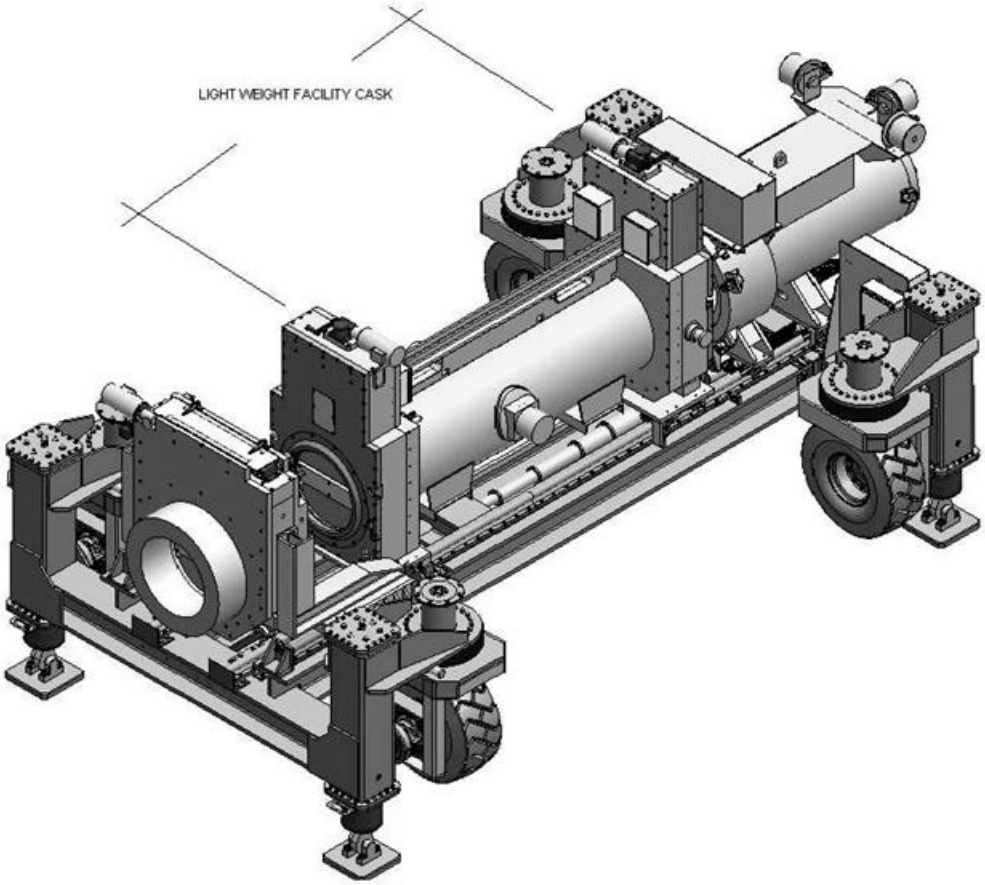

Figure 2.5-24. Horizontal Emplacement Machine with Light Weight Facility Cask

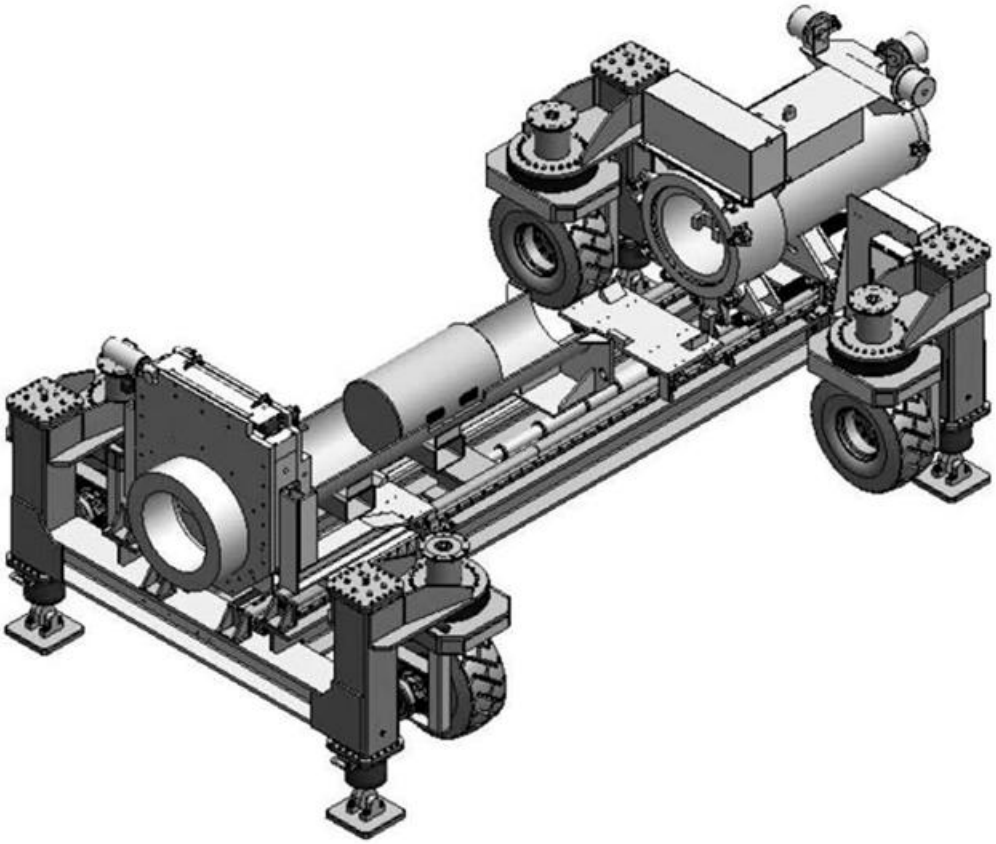

Figure 2.5-25. Horizontal Emplacement Machine with Shield Plug

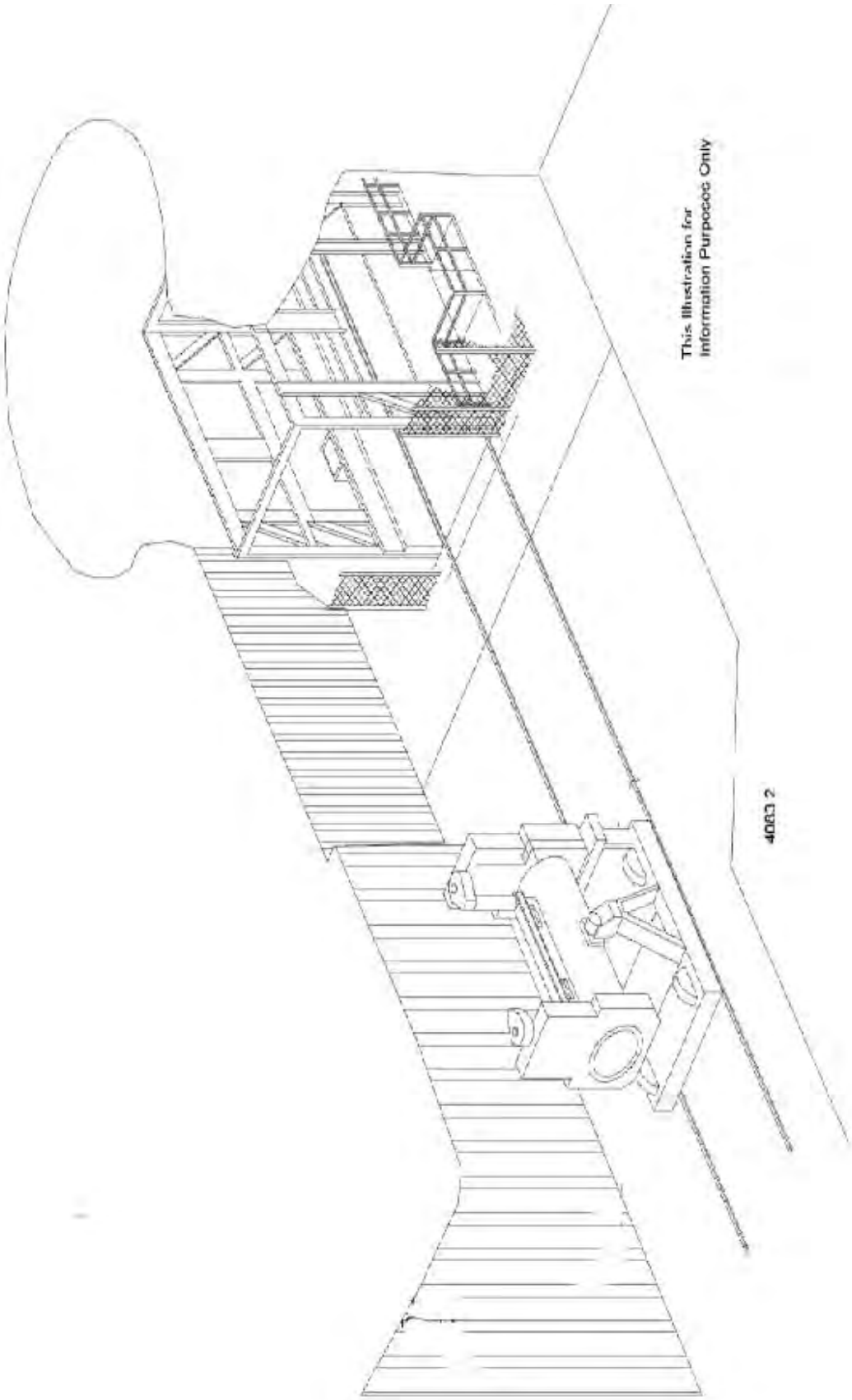

Figure 2.5-26. Remote-Handled Waste Handling Facility Cask Unloading from Conveyance

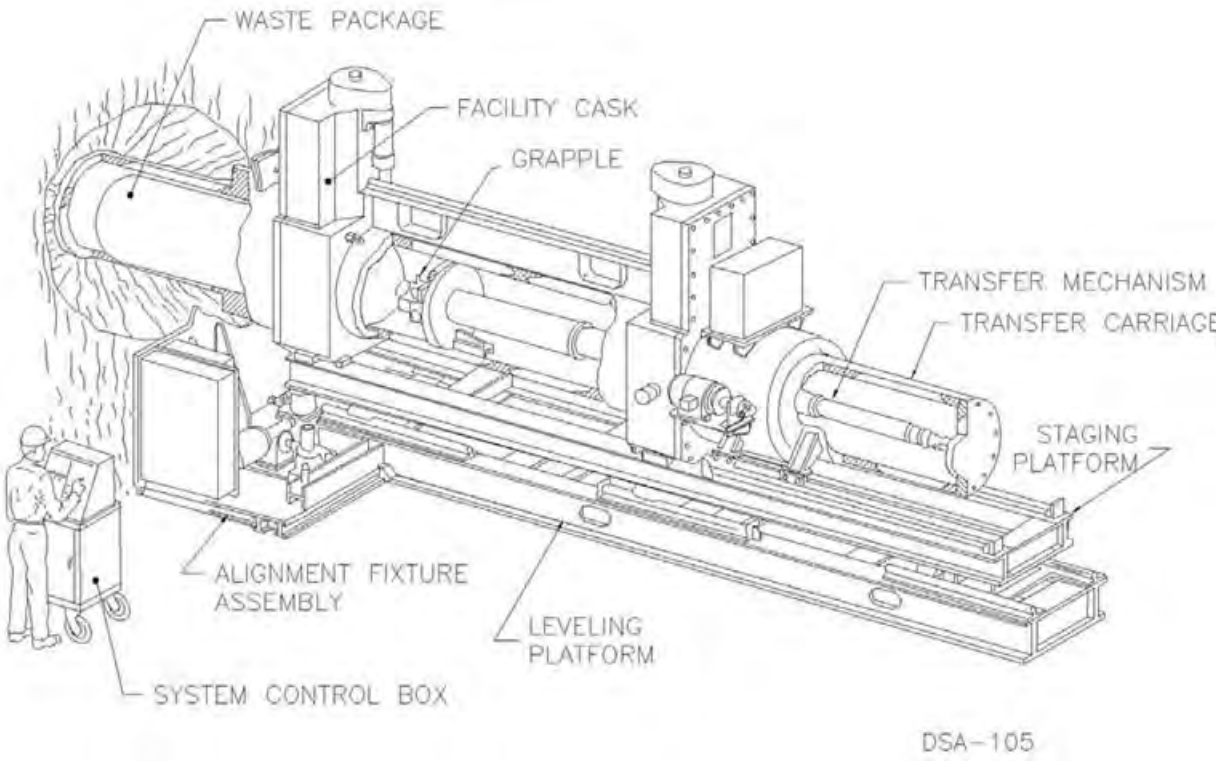

Figure 2.5-27. Remote-Handled Waste Canister Emplacement

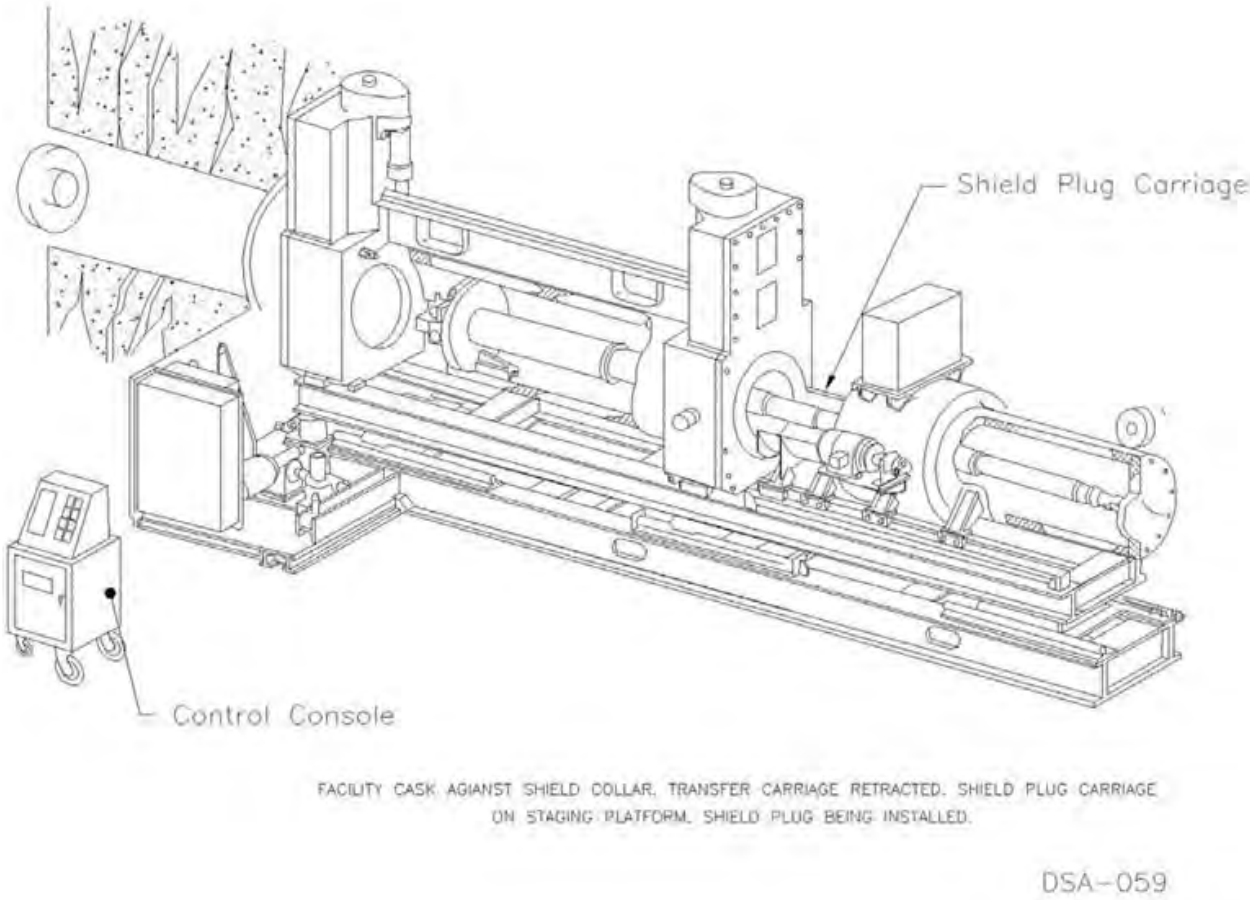

Figure 2.5-28. Installing Shield Plug

2.6 CONTACT-HANDLED WASTE HANDLING EQUIPMENT AND PROCESS DESCRIPTION

This section describes the CH Waste Handling equipment and process. The CH Waste Handling process begins at the security gate where CH Waste in shipping packages (TRUPACT-IIs, HalfPACTs, or TRUPACT-IIIs) arrives by truck (Figure 2.6-1 shows TRUPACT-IIs). Specific details of acceptable quantities and forms are provided in the WIPP WAC and the HWFP. A diagram of the CH Waste Handling process is shown in Figure 2.6-2.

2.6.1 Contact-Handled Waste Shipping Packages

2.6.1.1 TRUPACT-II

The TRUPACT-II is a stainless-steel, polyurethane foam-insulated Type-B shipping package designed to provide single containment for a shipment of CH Waste Containers (Figure 2.6-3). The packaging consists of an unvented stainless-steel Inner Containment Vessel (ICV) positioned within an Outer Confinement Assembly (OCA), which consists of an unvented stainless-steel Outer Confinement Vessel (OCV), a layer of polyurethane foam, and an outer stainless-steel shell. The container is a right circular cylinder with an outside diameter of approximately 94 inches and a height of approximately 122 inches.

The OCA has a domed lid that is secured to the OCA body with a locking ring. The OCV is equipped with a seal test port and a vent port. The ICV is a right circular cylinder with domed ends.

The TRUPACT-II is a certified Type B shipping package, by the NRC per “General License: NRC-Approved Package” (10 CFR 71.17), and is designed to safely transport TRU- and tritium-contaminated materials and wastes packaged in one of the following payload containers:

- 55-gallon drum.
- 85-gallon drum.
- 100-gallon drum.
- SWB.
- Standard pipe overpack.
- S100 pipe overpack.
- S200 pipe overpack.
- S300 pipe overpack.
- Criticality Control Overpack.
- TDOP.

The maximum weight of a TRUPACT-II is 19,250 pounds when loaded with the maximum allowable content weight of 7,265 pounds. The maximum gross weight of a payload container and the maximum number of payload containers per package are shown in Table 2.6-1.

Table 2.6-1. Payload Containers Maximums

Type	Maximum Number of Containers	Maximum Weight per Container
55-gallon drum	14 (2 seven-packs)	1,000 pounds
85-gallon drum (short)	8 (2 four-packs)	1,000 pounds
100-gallon drum	6 (2 three-packs)	1,000 pounds
SWB	2	4,000 pounds
Standard pipe overpack	14 (2 seven-packs)	328 pounds per 6-inch container 547 pounds per 12-inch container
S100 pipe overpack	14 (2 seven-packs)	550 pounds
S200 pipe overpack	14 (2 seven-packs)	547 pounds
S300 pipe overpack	14 (2 seven-packs)	547 pounds
Shielded containers (HalfPACT)	3 (1 three-pack)	2,260 pounds
Criticality Control Overpack	14 (2 seven-packs)	350 pounds
TDOP (TRUPACT-II)	1	6,700 pounds

Through analysis, the TRUPACT-II and HalfPACT are sufficiently robust to withstand the effects of a tornado-borne missile should a tornado occur at the WIPP facility (NS-05-001, *WIPP Contact Handled (CH) Documented Safety Analysis (DSA) Revision 10 Source Term, Dose Consequence and Supporting Information*).

2.6.1.2 HalfPACT

The HalfPACT, shown in Figure 2.6-4, is an NRC-certified Type B shipping package with a stainless-steel and polyurethane foam-insulated shipping container similar to, but shorter than, the TRUPACT-II. The package consists of an unvented stainless-steel ICV positioned within an OCV. The package is a right circular cylinder with an outside diameter of approximately 94 inches and a height of 92 inches.

The OCA has a domed lid that is secured to the OCA body with a locking ring. The OCV is equipped with a seal test port and a vent port. The ICV is a right circular cylinder with domed ends.

The HalfPACT is certified by the NRC per 10 CFR 71.17 and is designed to safely transport TRU- and tritium-contaminated materials and wastes packaged in the containers identified in Table 2.6-1 except for the TDOP. The TDOP is too large to be transported in a HalfPACT. The maximum weight of a HalfPACT is 18,100 pounds when loaded with the maximum allowable content weight of 7,600 pounds. Shielded containers will only be shipped in a HalfPACT.

2.6.1.3 TRUPACT-III

The TRUPACT-III (Figure 2.6-5) is an NRC-certified Type B shipping package designed to retain the integrity of containment and shielding required for its radioactive contents when subjected to normal conditions of transportation and hypothetical accident conditions set forth in “Packaging and Transportation of Radioactive Material” (10 CFR 71). The TRUPACT-III is certified by the NRC per 10 CFR 71.17 and is designed to safely transport CH TRU in the SLB2 waste payload container.

The containment boundary and all primary structural members of the body are constructed of stainless steel. The containment boundary structure consists of an inner shell that is backed by a corrugated sheet

of Unified Numbering System (UNS) S31803 stainless steel and an outer structural shell. Completely surrounding the containment boundary structure is a unique combination of energy-absorbing and insulating materials that provide both structural and thermal protection.

The TRUPACT-III has a bolted closure lid, equipped with vent and test ports, and is further secured by an overpack cover that is bolted to the TRUPACT-III to protect the lid.

The maximum weight of the TRUPACT-III is 55,116 pounds when loaded with the maximum allowable content weight of 11,486 pounds.

Through analysis, the TRUPACT-III is sufficiently robust to withstand the effects of a tornado-borne missile should a tornado occur at the WIPP (NS-05-001).

2.6.2 Contact-Handled Waste Containers

2.6.2.1 55-gallon Drums

The standard 55-gallon metal drum (Figure 2.6-6) is a DOT Type 7A steel drum with a maximum gross weight of 1,000 pounds. A 55-gallon drum is approximately 0.05 inch thick and is constructed with a lap-welded bottom and numerous lid configurations. A standard 55-gallon drum has a gross internal volume of approximately 7 ft^3.

2.6.2.2 85-gallon Drums

The 85-gallon drum (Figure 2.6-7) is a DOT Type 7A steel drum, approximately 0.06 inch thick and constructed similar to the 55-gallon drum. The 85-gallon drum is used primarily for overpacking 55-gallon drums. The 85-gallon drum has a gross internal volume of approximately 11 ft^3. There are two sizes of 85-gallon drums (*Contact-Handled Transuranic Waste Authorized Methods for Payload Control* (CH-TRAMPAC)). The short 85-gallon drum is approximately 35 inches tall and has a diameter of approximately 30 inches. The tall 85-gallon drum has a height of approximately 40 inches and a diameter of approximately 29 inches. Only the short 85-gallon drums can be transported in a TRUPACT-II, while the HalfPACT can transport both types of 85-gallon drums.

2.6.2.3 100-gallon Drums

The 100-gallon metal drum (Figure 2.6-8) is a DOT Type 7A steel drum with a maximum gross weight of 1,000 pounds. The 100-gallon drum may be either direct loaded or loaded with compacted 55-gallon drums. The 100-gallon drum has a gross internal volume of approximately 13 ft^3.

2.6.2.4 Standard Waste Box

The SWB (Figure 2.6-9) is a DOT Type 7A steel-fabricated box with a lap-welded bottom and an internally flanged, bolted closure lid. The weight of an empty SWB is approximately 680 pounds and the maximum gross weight of a loaded SWB is 4,000 pounds. Four threaded couplings, two on each side of the SWB with the lifting clips, are installed in the flange for inserting a filter to provide protection from particulate leakage during shipment or from buildup of internal pressure. The SWB has an internal volume of approximately 66 ft^3.

2.6.2.5 10-Drum Overpack

The TDOP (Figure 2.6-10) is a DOT Type 7A welded-steel right circular cylinder, approximately 74 inches tall and 71 inches in diameter. An empty TDOP weighs approximately 1,600 pounds and has a maximum loaded weight of 6,700 pounds. A bolted lid on one end is removable and sealing is accomplished by clamping a gasket between the lid and the body. Filter ports are located near the top of the TDOP. A TDOP may contain up to 10 standard 55-gallon drums or one SWB. The TDOP has an internal volume of approximately 155 ft^3.

2.6.2.6 Standard Pipe Overpack

The standard pipe overpack (Figure 2.6-11) consists of a stainless-steel pipe component surrounded by fiberboard and plywood dunnage in a DOT Type 7A 55-gallon drum with a rigid polyethylene liner and lid. The pipe container provides three significant control functions with regard to waste materials: criticality control, shielding, and containment of waste material.

The pipe component (Figure 2.6-12) is a stainless-steel cylindrical pipe with a closed-bottom cap and a bolted stainless-steel lid sealed with an O-ring. The pipe component is approximately 2 feet long, and is available with either a 6-inch or a 12-inch diameter. The pipe component is vented through a filter. The pipe component is centered in the standard 55-gallon vented steel drum with fiberboard and plywood packing material.

The pipe component and pipe overpack weights are shown in Table 2.6-2.

Table 2.6-2. Pipe Component and Pipe Overpack Weights

Size of Pipe Component	Pipe Component Maximum Content Weight (lb)	Pipe Component Maximum Gross Weight (lb)	Pipe Overpack Maximum Gross Weight (lb)
6-inch diameter	66	153	328
12-inch diameter	225	407	547

2.6.2.7 S100 Pipe Overpack

The S100 pipe overpack (Figure 2.6-13) is a neutron-shielded container. It differs from the standard pipe overpack in that most of the fiberboard dunnage is replaced with neutron-shielding material. In addition, neutron-shielding material is placed inside the pipe component above, below, and around the payload.

The S100 pipe overpack consists of a 6-inch pipe component surrounded by neutron-shielding material on the sides and by fiberboard and plywood dunnage on the top and bottom, in a 55-gallon drum with a rigid polyethylene liner and lid. It is placed in the drum, using the same type of fiberboard and plywood dunnage below the lower surface and above the upper surface of the pipe component. The space around the sides of the pipe component is filled with neutron shielding material. To provide shielding for the top and bottom of the pipe component, rigid high-density polyethylene plugs are placed above and below the payload inside the pipe component. A rigid high-density polyethylene shield sleeve is placed between the two end plugs. The S100 pipe overpack is intended for the shipment of sealed neutron sources.

2.6.2.8 S200 Pipe Overpack

The S200 pipe overpack is a gamma-shielded container. It differs from the standard pipe overpack through the addition of a gamma shield insert located by dunnage inside the pipe component. It is intended for the shipment of TRU Waste forms with high gamma energies. The gamma shield insert is a two-component lead assembly consisting of a cylindrical body with an integral bottom cap and a detachable lid. The shield insert is available in two sizes. The overall dimension of the S200-A shield insert is approximately 10 inches in diameter and 11 inches tall. The overall dimension of the S200-B shield insert is approximately 9 inches in diameter and 18 inches tall. The pipe component is positioned using fiberboard and plywood dunnage in a 55-gallon drum with a rigid polyethylene liner and lid.

2.6.2.9 S300 Pipe Overpack

The S300 pipe overpack (Figure 2.6-14) is a neutron-shielded container. It differs from the standard pipe overpack through the addition of neutron shielding inside the pipe component. It is intended for the shipment of sealed neutron sources. The neutron shield insert is a two-part assembly consisting of a cylindrical body and stepped lid. The insert fits inside and fills the 12-inch pipe component and is held in place by the lid of the pipe component. The shield insert is made from solid high-density polyethylene and has a wall thickness of approximately 4 inches.

2.6.2.10 Standard Large Box 2

The SLB2 is a DOT Type 7A steel-fabricated box (Figure 2.6-15) with a lap-welded bottom and an internally flanged, bolted closure lid. The weight of an empty SLB2 is approximately 2,700 pounds and the maximum gross weight loaded is 10,500 pounds. The SLB2 is approximately 108 inches long, 69 inches wide, and 73 inches high. Threaded couplings installed on each side of the SBL2 are for inserting a filter to provide protection from particulate leakage during shipment or from buildup of internal pressure. There are also two lifting clips on each side of the SLB2. The SLB2 has an internal volume of approximately 246 ft^3.

2.6.2.11 Shielded Containers

The shielded container (Figure 2.6-15a) is a vented carbon-steel and lead cylindrical structure with a removable lid designed to hold an inner 30-gallon container of RH Waste. The shielded container meets DOT 7A Type A requirements of 49 CFR 178.350, “Specification 7A; General Packaging, Type A,” and will be shipped to WIPP in HalfPACT Type B packaging. The cylindrical sidewall of the shielded container has approximately 1-inch-thick lead shielding sandwiched between two carbon-steel shells. The external wall is approximately 1/8 inch thick, and the internal wall has a thickness of approximately 3/16 inch. The lid and the bottom of the shielded container are made of carbon steel and are approximately 3 inches thick. An empty container weighs about 1,726 pounds. The shielded container and the inner 30-gallon container will be vented, assembled in a three-pack configuration on a triangular pallet, and surrounded by radial and axial dunnage components.

Upon arrival at WIPP in a HalfPACT, the containers will be processed like CH TRU Mixed Waste using CH Waste Handling equipment and operating procedures. The waste will be designated as RH Waste from the generator’s inventory in the WDS WIPP Waste Information System.

Based on the waste definitions, the designation of CH and RH Waste is based solely on the dose rate at the surface of the payload container as determined at a generator site during characterization.

2.6.2.12 Criticality Control Overpack

The Criticality Control Overpack is a 55-gallon drum (Figure 2.6-15b), containing a stainless steel criticality control container held in place by plywood dunnage plates in the top and bottom of a 55-gallon drum. The criticality control container provides two significant control functions: criticality geometry control by limiting the most reactive configuration to a cylinder and confinement of waste material.

The criticality control container is a stainless steel cylindrical pipe with a blind flange welded bottom cap and a blind flange bolted to a slip-on flange with a gasket providing a sealed lid. The criticality control container is approximately 2 feet long and has a 6-inch diameter. Both the Criticality Control Overpack and criticality control container are vented through a filter. The criticality control container is centered in the Criticality Control Overpack (55-gallon drum) by plywood dunnage plates. The Criticality Control Overpack has a maximum gross weight of 350 pounds.

2.6.3 Contact-Handled Waste Handling Equipment

This section describes the CH Waste Handling equipment located in the CH Bay and Room 108 (Section 2.6.3.1), as well as the conveyance loading car (Section 2.6.3.1.20) and the CH Waste Handling equipment located in the UG (Section 2.6.3.2).

2.6.3.1 Contact-Handled Bay/Room 108

2.6.3.1.1 TRUDOCK 6-ton Cranes

Each TRUDOCK is serviced by two 6-ton overhead cranes that are used to transfer the shipping package OCV and ICV lids to their individual support stands and the payload Waste Containers to the facility pallet. The cranes are nearly identical, having a single girder, under-hung bridge, trolley, and wire rope hoist as shown in Figure 2.6-16. The two cranes at each TRUDOCK share the rails where the bridges travel. The north cranes can service either end of the TRUDOCK; however, the south cranes can only service the south positions. The cranes are prevented from colliding with each other by limit switches. If a limit switch is actuated on either crane. The crane will then stop motion in the direction of travel; however, the crane can move in the opposite direction to disengage the limit switch.

Each crane is controlled by its individual radio-frequency transmitter or pendant control. The TRUDOCK 6-ton cranes are designed to hold their load in the event of a DBE or loss of power (SDD WH00). Overhead cranes used in Waste Handling operations are certified to lift their rated capacity and load tested to 125 percent of maximum rated lift. The crane control system allows the operator to lift and transfer the load to the location of the facility pallet. The cranes use specially designed lifting and load-balancing fixtures, including the adjustable center-of-gravity lifting fixture (ACGLF) (Figure 2.6-17), the SWB lifting assembly, the TDOP lifting assembly, the four-pack lifting fixture, and short and long lifting leg sets.

2.6.3.1.2 TRUDOCK Exhaust System

Each TRUDOCK has an exhaust system with two working stations and each station consists of two subsystems: the TRUDOCK vent hood system and the TRUDOCK vacuum system. Both subsystems are routed through HEPA filters before entering the CH Bay Battery Charging Area exhaust system, which is also HEPA filtered, before discharging to the atmosphere (Figure 2.6-18 and Figure 2.6-19).

The TRUDOCK vent hood system consists of an enclosure that is installed over the ICV lid and the Shipping Package body before the lid is removed. The enclosure is connected to the exhaust system

before the lid is removed, thus ensuring that any potential radioactive contamination is passed through a HEPA filter system. After the filter, there is a small fan at each dock that provides air flow for the docks that feeds the Battery Exhaust System.

The TRUDOCK vacuum system is used to evacuate the Shipping Package OCV or ICV to pull the outer or inner lid down to assist in lid removal. The vacuum system inlet is connected by flexible tubing, using quick-disconnect fittings, to the appropriate ICV or OCV vent port tool. A radiological assessment filter in the inlet line is used when evacuating the ICV. The radiological assessment filter is checked for radioactive contamination from the inside of the Shipping Package.

2.6.3.1.3 Space-frame Pallet Assemblies

Two types of space-frame pallet assemblies, more commonly called payload or drum pallets, are used in CH Waste shipments. A payload pallet supports the drum payloads contained in a TRUPACT-II or HalfPACT and interface with the ACGLF during payload removal from the transportation package. Space-frame pallets, constructed of aluminum, resemble a spoke wagon wheel that has a thin aluminum sheet welded to one side. Space-frame pallets have a diameter of approximately 63 inches, are approximately 3 inches thick, have a working load limit of 7,600 pounds, and have multiple lifting pockets that interface with the lifting legs of the ACGLF.

The payload pallet used under drum payloads has three lifting pockets of the same design and spacing as the OCA and ICV lids. Three guide tubes pass through the drums and align with the lifting pockets to guide the (long) lifting legs of the ACGLF when removing the waste assemblies. The weight of the pallet is approximately 136 pounds.

A second type of payload pallet, used for HalfPACT payloads of 85-gallon drums, has four lifting pockets of the same design as the OCA and ICV lids. This type of payload pallet interfaces with the HalfPACT four-drum pallet-lifting device discussed below and weighs approximately 147 pounds.

2.6.3.1.4 Adjustable Center-of-Gravity Lifting Fixture

The ACGLF (Figure 2.6-17) is used with a TRUDOCK 6-ton crane to lift the OCV and ICV lids or the payload Waste Containers out of the TRUPACT-II and HalfPACT. The ACGLF has a lifting capacity of 10,000 pounds and weighs approximately 2,500 pounds. The ACGLF is designed as follows:

- The lower strong-back assembly, a carbon-steel lifting beam structure, has three revolving joints, 120 degrees apart, to which the lifting legs are attached.
- Three linear actuators mounted on the underside of the lower strong-back assembly provide the linear motion for each of the lifting-leg revolving mechanisms, which connect the lifting legs to the load.
- Two rotating balance weights are mounted on a circular upper plate assembly. The rotating balanced weights are attached to two counter-rotating ring gears that are independently driven.
- Two 1/4-horsepower, 115-volt, single-phase motors drive the counter-rotating ring gears that position the rotating balance weights around the circumference of the upper plate assembly.
- Three short lifting legs raise the OCV and ICV lids or SWBs when raised with an SWB lifting-fixture adapter and three long lifting legs raise a payload pallet. The bottom of the lifting legs are designed to engage a horizontal lifting bar in the lifting pockets of the OCV and ICV lids, SWB lifting fixture adapter, and drum shipping pallet when the lifting leg is rotated into position. The

ACGLF also includes three electrical motors and arms to rotate the lifting legs into their locking lift positions. The control system has limit switches with lights to indicate that each lifting leg has rotated to attach to the lifting pins.

- Two tilt sensors provide X- and Y-axis tilt indication of the ACGLF.
- Two balance-weight-position sensors continuously provide the position of each of the two rotating balance weights.
- A single-point lifting shackle is mounted in the center of the ACGLF for attachment to the crane.
- One portable control console provides operator controls and indicators to monitor the balance condition of the load and to compensate, if necessary, for load imbalance by repositioning the two counterweights.

2.6.3.1.5 Nonadjustable Center-of-Gravity Lifting Fixture

This fixture is similar to the ACGLF in function except that it has no capability for balancing the load. It can be used as a backup for the ACGLF to lift the OCV and ICV lids, the entire ICV, and the payload Waste Containers (pallet with 14 drums, or two SWBs strapped together). The fixture has a lifting capacity of 10,000 pounds and weighs approximately 600 pounds.

2.6.3.1.6 HalfPACT Four-Drum Pallet Lifting Device

The HalfPACT four-drum pallet-lifting device is designed to lift four 85-gallon drums on a single pallet. Four legs connect the lifting device to the pallet. The ACGLF interfaces at three points with lifting sockets at the top of the lifting device. Four linkages connect the three ACGLF connector legs to the lifting-device legs. The linkages allow the lifting-device legs to be controlled by the ACGLF. Each lifting-device leg may be actuated by either the linear actuator on the ACGLF or the handle located on each ACGLF leg-turning sleeve. The HalfPACT four-drum pallet-lifting device has a rated load of 10,000 pounds. It may be lifted by an ACGLF at the three attachment points or by the clevis located in the center of the device.

2.6.3.1.7 SWB Lifting-fixture Adapter

The SWB lifting-fixture adapter (Figure 2.6-20) is designed to interface between the ACGLF and the SWB. Its frame is made from square steel tubing. The three lifting pockets on the top of the fixture are located on a circle 56 inches in diameter to match the positioning of the three legs of the ACGLF. The SWB lifting-fixture adapter has a rated lifting capacity of 7,500 pounds and weighs approximately 334 pounds.

2.6.3.1.8 SWB Forklift Fixture

The SWB forklift fixture (Figure 2.6-22) is used in the CH Bay to move SWBs with a 6-ton electric forklift. The SWB forklift fixture is a welded-steel frame mounted to and supported on the front side of a 6-ton forklift carriage from which the lifting forks have been removed. The fixture has a rated load of 4,000 pounds, is designed specifically for lifting SWBs, and weighs approximately 360 pounds.

2.6.3.1.9 TDOP Lifting-fixture Adapter

The TDOP lifting fixture adapter (Figure 2.6-21) is made from square steel tubing with sections of schedule 80 pipe welded to the assembly tubing. Holes are drilled into the pipe and cold-rolled steel pins are welded in place. The lifting pockets are located on a 56-inch diameter circle to match the positioning

of the three legs of the ACGLF. The latch assemblies, which mate with the three lifting clips on the TDOP, are engaged with the latch handles and are locked in place with ball locking pins. The TDOP lifting fixture adapter has a rated lifting capacity of 7,000 pounds and weighs approximately 300 pounds.

2.6.3.1.10 TDOP Upender

The TDOP upender is used to overpack an SWB in a TDOP. The TDOP must be positioned horizontally to allow a forklift to insert the SWB. Once the SWB is loaded, the TDOP is returned to the vertical position for installation of the TDOP lid. The TDOP upender provides cradle rotation of 90 degrees by using a mechanical chain and double-reduction gear driven by an electric motor. The upender has a rated maximum capacity of 8,000 pounds and a gross weight of 5,920 pounds. The upender has a table sized to accommodate the TDOP. The table is equipped with a urethane-coated Vee block with tie-down straps to prevent a TDOP from rolling while being transported on the upender. The upender is bolted to a facility pallet before use to provide stability and to allow transport by CH Waste Handling equipment (13-ton battery-powered forklift in the WHB, the transporter, or a 20-ton forklift in the UG).

A warning beacon and horn mounted on the control enclosure activates a few seconds before movement of the cradle. End-of-travel limit switches automatically stop the cradle in either the full-up or full-down positions. Over-travel limit switches and hard mechanical stops prevent the cradle from rotating beyond the full-up or full-down positions.

2.6.3.1.11 Facility Pallets

Facility pallets (Figure 2.6-23) are fabricated-steel units approximately 13 feet long and 9 feet wide that weight approximately 4,200 lbs. Facility pallets are designed to accommodate two stacks of two-high assemblies of drums, two stacks of two-high SWBs, two stacks of one-high shielded containers, two TDOPs, one SLB2, or combinations of assemblies of drums, SWBs, and TDOPs. Facility pallets have a rated load of 25,000 pounds. TRUPACT-II payload is 7,265 pounds, two TRUPACT-II payloads can be placed on a facility pallet. Load management of the facility pallet is required when placing a HalfPACT payload (maximum weight 7,600 pounds) on a pallet to prevent exceeding the facility pallet load capacity. After removal from the Type B shipping package, waste assemblies are required to be on facility pallets until emplacement in the UG, in accordance with the HWFP.

Forklift pockets in the long side of the facility pallet allow lifting the facility pallet with a 13-ton battery-powered forklift. Using the forklift pockets reduces the potential for puncture accidents. Holding bars are built into the pallet and are used to tiedown waste assemblies.

2.6.3.1.12 Surface Waste Handling Forklifts

Battery-powered forklifts are used to handle CH Waste in the CH portion of the WHB. Battery-powered 13-ton forklifts are used to unload TRUPACT-IIs and HalfPACTs from the transportation trailers and move them through the WHB airlocks to support stands located in the pockets of the TRUDOCKS in the CH Bay. They are also used to move facility pallets between the CH Bay, the storage areas, and the CLR. Each 13-ton forklift has a maximum lifting height of 96 inches. The 13-ton forklifts are equipped with blunt tines to minimize Waste Container puncture, and can operate for eight hours before the batteries have to be recharged. Each forklift has a high-volume hydraulic pump unit that supplies the power for lifting, tilting, and side shifting of the forks. A separate hydraulic unit supplies power for braking and steering. The capacity of the hydraulic fluid reservoir is approximately 37 gallons.

The 13-ton battery-powered forklifts are designed and constructed such that the combustible materials, including electrical components, batteries, and hydraulic reservoir and lines, are segregated from each

other by metal barriers sufficient to minimize fire that may originate on the forklift from propagating to other parts of the forklift.

The external structure of the 13-ton forklift is constructed with thick metal walls that provide protection for the hydraulics, motor, motor controls, and the batteries from collision damage that could initiate a fire involving the combustible material. Similarly, the internal design of the 13-ton battery-powered forklifts incorporates metal partitions that separate the batteries from the motor, motor controls, hydraulics, seat cushions, and solid rubber tires. The hydraulic cylinders that allow the forklift to pick up a load are mounted behind the forklift carriage such that the cylinders are not damaged during use. The 13-ton forklift hydraulic system operates at low operating temperatures (i.e., less than 150°F). The hydraulic fluid used in the 13-ton forklifts has a flashpoint per the *13-ton CH Forklift Fire Evaluation* (ECO 11676).

A 6-ton battery-powered forklift is also used in the CH Bay. It has a hydraulically operated side shift positioner for shifting the load to the right or left. The capacity of the hydraulic fluid reservoir is approximately 21 gallons. Either standard type forks or specially designed fixtures can be attached to the positioner for lifting different loads. The 6-ton battery-powered forklift has a maximum lifting height of 118 inches, and can operate for eight hours before the batteries have to be recharged. It can be operated with different attachments as listed below:

- A push/pull device to lift and move waste assemblies.
- A single- or double-drum handling device.
- An SWB forklift fixture to lift and move individual SWBs.
- Two forks for lifting loads.

A 35-ton diesel-powered forklift equipped with an International Standards Organization (ISO) container handler is used to lift a TRUPACT-III shipping container from the transport trailer and transfer it onto a YTV. The forklift has a 110-gallon diesel fuel tank and a 136-gallon hydraulic fluid tank.

2.6.3.1.13 Automated Guided Vehicles

The types of Automated Guided Vehicles used at the WIPP are the FTV and the YTV.

FTVs are used to handle CH Waste in the CH portion of the WHB. The FTV is designed to transport a facility pallet loaded with CH Waste. Its cross-sectional dimensions are slightly larger than a facility pallet and it is about three times as high. The FTV is certified to carry a load of 30,000 pounds while traveling in either forward or reverse at speeds of up to 240 fpm. Each FTV can perform up to seven lifts per hour and operate 16 hours a day, seven days a week. All components are electrical and no hydraulic systems are used.

The FTV is equipped with three polyurethane wheels for use in the WHB and three rail wheels for use in the CLR. Drive and steering units are located on each of the polyurethane wheel assemblies. The FTV lowers the rail wheels in the CLR when transporting a loaded facility pallet onto the Waste Shaft Conveyance.

The FTV is guided on a predetermined path that is programmed into the computer system. Movements are controlled through wireless transmission. The computer system is programmed to control Automated Guided Vehicle traffic to prevent collisions should two Automated Guided Vehicles approach the same

travel segment. An operator continuously activates the FTV by constantly pressing a dead-man trigger switch while following the movements of the FTVs.

The position of the FTV is calculated by a laser navigation system. A laser scanner on the FTV emits a rotating laser beam that is reflected back by strategically positioned reflectors. The laser scanner continuously triangulates its position as the FTV moves along the path. The FTV maintains its position within 1 inch of the programmed parameters.

The FTV can function in a Manual or Automated Mode with an operator using a dead-man trigger. In Automated Mode, the FTV is computer controlled. A manual control can be attached directly to the FTV for movement outside the programmed path. The FTV is used in Automated Mode with an operator until all operations in the WHB are accustomed to keep clear of the FTV path.

The FTV is normally at rest in the recharge station until a command is initiated. The FTV will follow its course to the facility pallet stand, pick up the facility pallet, transport it to the CLR, lower the rail wheels, transport the pallet to the facility pallet chairs in the Waste Shaft Conveyance, and return to the charging station in the CH Bay. Other pickup and delivery functions are performed as programmed.

Construction of the FTV includes several safety features. Stop buttons are located around the units. A laser scanner prevents collision accidents. Warning mechanisms prevent personnel from approaching the moving vehicle. The platform is equipped with two pintles spaced to match openings in the bottom of the facility pallets. The pintles prevent the facility pallets from sliding or moving off the FTV.

There are four types of stop buttons. A dead-man trigger switch, which stops the vehicle if either in the no-squeeze or maximum squeeze position. A master battery-disconnect button stops all electrical functions, disabling the unit completely. Two controlled stop buttons, located one on each side, bring the unit to a slow stop. Four emergency stop buttons interrupt power to all moving devices to an immediate stop.

A laser scanner on each side of the FTV senses obstructions in its path. The system is programmed to respond to obstructions depending on the position of the obstacle along its path. The FTV may slow down or stop depending on the distance from the obstruction.

The YTV is designed to transport one TRUPACT-III shipping container from the WHB Parking Area Unit (PAU) through the WHB into Room 108. Its cross-sectional dimensions are slightly larger than a TRUPACT-III and it is approximately 31 inches in height. The YTV is certified to carry a load of 60,000 pounds. It can travel both forward and in reverse at speeds of up to 120 fpm. The YTV has no hydraulic systems.

The YTV is equipped with three polyurethane wheels for use in the yard and WHB. Two-wheel assemblies house drive units and a one-wheel assembly houses a steering unit. The YTV is not equipped with rail wheels.

The YTV travel path, collision avoidance system, and Operational Mode are the same as discussed for the FTV.

The YTV normally rests in its charging station, located in Building 412, until a command is initiated. The YTV follows its pre-programmed path to the yard transfer station or other pre-programmed tasks as assigned in the process. Once the tasks are complete, the YTV returns to its charging station. Other pickup and delivery functions are performed as programmed.

The YTV construction includes several safety features. Stop buttons are located around the units. Laser and mechanical bumpers prevent collisions with obstacles in its path. Warning mechanisms alert personnel to the proximity of the YTV. The YTV platform is equipped with two pintles spaced to match openings in the bottom of the TRUPACT-III shipping containers. The pintles prevent the shipping containers from sliding or moving off the YTV.

There are four types of stop buttons. A dead-man trigger switch stops the vehicle if either in the no-squeeze or maximum squeeze position. A master battery-disconnect button stops all electrical functions, disabling the unit completely. One controlled stop button, located on the side, brings the unit to a controlled stop. Four emergency stop buttons interrupt power to all moving devices, and pressing one of these buttons results in an immediate stop.

There is a laser scanner on both the front and rear of the YTV. The scanners sense obstructions in the YTV's path. The YTV will slow down or stop depending on the distance from the obstruction.

Other safety features include an alarm horn and warning lights that activate prior to movement and during movement. The exposed charging plates at the charging station and the YTV are not energized until the YTV is docked at the charging station and the charger determines the battery's condition warrants a charge.

2.6.3.1.14 TRUPACT-III International Standards Organization Container Handler

An ISO container handler, rated for 56,000 pounds and weighing approximately 6,000 pounds, is attached to the top of the TRUPACT-III using the 35-ton forklift. The ISO container handler is positioned on the TRUPACT-III and each latching pin inserted into its respective ISO pickup point and locked into position to secure the handler to the TRUPACT-III. The four latching mechanisms, one at each corner, are hydraulically controlled using the 35-ton forklift's hydraulic system.

2.6.3.1.15 TRUPACT-III Bolting Station

The bolting station (Figure 2.6-24) is located in the southeast corner of Room 108 and consists of the bolting robot, safety fence, control panel, overpack cover and closure lid stands, bolt rack, exhaust hood, and monorail hoist. The safety fence, control panel, overpack cover and closure lid stand, and bolt rack are installed to support operations at the bolting station. This equipment is used for overpack cover and closure lid removal and installation.

2.6.3.1.15.1 TRUPACT-III Monorail Hoist

The bolting station is serviced by a 7.5-ton monorail hoist that is used to remove the overpack cover and closure lid from the TRUPACT-III shipping container and place them in their stands. The monorail hoist is an under-hung, trolley and wire rope hoist. The monorail hoist travels between storage stands and is controlled by a radio-frequency transmitter or pendant control. The monorail hoist is designed to hold its load in the event of a DBE or loss of power. The monorail hoist is certified to lift its rated capacity and is load tested to 125 percent of maximum rated lift.

2.6.3.1.15.2 TRUPACT-III Bolting Robot

The bolting robot is an electromechanical system with an end-of-arm tool used to detension, remove, install, and retension the TRUPACT-III overpack cover and closure lid bolts. The end-of-arm tool is a direct current motor-driven nut runner with a capacity to torque the bolts to approximately

1,200 foot-pounds. The robot uses a two-dimensional vision system to locate the bolts and bolt holes. Hand tools, such as pneumatic hand wrenches, can be used in lieu of the bolting robot.

A safety perimeter is established around the bolting robot using an approximately 8-foot-high wire mesh fence and a light curtain. During robot operation, if the light curtain is broken the robot power is interrupted, stopping robot operations.

2.6.3.1.15.3 TRUPACT-III Exhaust Hood System

The bolting station has an exhaust hood system that consists of exhaust hood, dampers, roughing filter, and ductwork. The exhaust hood system consists of an enclosure, which is installed over the closure lid / TRUPACT-III container body interface before the closure lid is removed. The exhaust hood fan is interlocked with the two CH Bay Battery Charging Area exhaust fans. One of two fans must be operating for the exhaust hood fan to operate. Exhaust hood operation ensures that any potential airborne radioactivity released when removing the TRUPACT-III closure lid is passed through a roughing filter prior to entering the Battery Exhaust System, which is also HEPA filtered, before discharging to the atmosphere.

2.6.3.1.16 Payload Transfer Station

The Payload Transfer Station (Figure 2.6-25) is designed to remove an SLB2 from a TRUPACT-III and place it on a facility pallet. A FTV is pre-positioned at the Payload Transfer Station between the support columns of the SLB2 support stand. Following removal of the TRUPACT-III overpack cover and closure lid, the YTV with its TRUPACT-III payload moves to the Payload Transfer Station. During the approach, the YTV and TRUPACT-III are aligned with the FTV and transfer table. Hoist rings or other threaded connectors are manually fastened to the TRUPACT-III shipping pallet and then are attached to the connection tools of the pulling/pushing chain of the transfer table. Two connection tools are supplied, but the loaded pallet may be removed with just one connection tool. The TRUPACT-III's roller air bed is then manually inflated with plant air. The TRUPACT-III pallet with its SLB2 payload is extracted by activating the electric drive of the pulling/pushing chain. Once fully positioned on the transfer table, the FTV raises the transfer table along with the TRUPACT-III pallet and SLB2 payload to a height slightly above the retractable arms of the SLB2 support stand. The retractable arms of the support stand are positioned underneath the SLB2. The FTV lowers the TRUPACT-III pallet and transfer table, leaving the SLB2 suspended from the retractable arms of the SLB2 support stand. The TRUPACT-III pallet is then reinserted into the TRUPACT-III using the pulling/pushing chain, the D-clips are removed, the roller bed is depressurized, and the YTV is directed to return the TRUPACT-III to the bolting station. Once the YTV is clear of the Payload Transfer Station, the FTV with the transfer table is moved outside the footprint of the Payload Transfer Station and a second FTV with a facility pallet is positioned underneath the suspended SLB2. The FTV raises the facility pallet to the SLB2. The retractable arms of the support stands are disengaged from the SLB2 and the FTV with its facility pallet and SLB2 are lowered. The SLB2 is then secured to the facility pallet and the FTV is directed either to place the loaded facility pallet on a pallet stand in the CH Bay or to proceed to the CLR.

2.6.3.1.16.1 Transfer Table

The transfer table is an attachment to the FTV that shares the facility pallet interface. In addition to a roller bed, it has an electrically driven rigid chain system that can push and pull a fully loaded TRUPACT-III pallet. Similar to a facility pallet, the transfer table may be removed from the FTV. The electric drive of the transfer table is powered from local outlets at the SLB2 support stand. The transfer table control system is in a panel located outside of the support stands. The controls are limited to controlling the movement of the TRUPACT-III pallet.

2.6.3.1.16.2 SLB2 Support Stand

The SLB2 support stand is a stationary structure with locking retractable arms. The support stands are seismically qualified to hold a fully loaded SLB2 during a DBE. The support stand is sufficiently high to permit a FTV with a facility pallet to move underneath a suspended SLB2.

2.6.3.1.17 Facility Pallet Stands

Facility pallet stands are located in the CH Bay. These stands are used to support loaded or empty facility pallets. The stands are seismically qualified to hold a fully loaded facility pallet during a DBE. The facility pallet stands are sufficiently high to permit a FTV to move underneath the facility pallet. The FTV is then raised to lift the loaded facility pallet and remove it from the facility pallet stand (Figure 2.6-26).

2.6.3.1.18 Facility Pallet Dispenser

A facility pallet dispenser is located in the southwest area of Room 108. The dispenser is a powered device to store and dispense facility pallets. Empty facility pallets are loaded into the dispenser and FTVs can remove a facility pallet.

2.6.3.1.19 Miscellaneous Equipment

Other equipment used in the CH Bay and Room 108 to support Waste Handling or maintenance activities include battery-powered floor sweepers, a battery-powered manlift, and a battery-powered scissor lift.

2.6.3.1.20 Conveyance Loading Car

The conveyance loading car, which is approximately 13 feet long and 7.5 feet wide, is an electric-cable powered vehicle driven by electrical motors through variable speed drives that operates on rails. The car is designed with a flat bed that has adjustable height capability and is used to transfer facility pallets onto or off the pallet support stands in the Waste Shaft Conveyance by raising and lowering its bed (Figure 2.6-27). The conveyance loading car platform is equipped with two pintles spaced to match corresponding openings in the bottom of the facility pallet. The pintles prevent the pallet from sliding or moving off the conveyance loading car. The lifting height of the jackscrews that lift the conveyance loading car platform is approximately 8 inches. The jackscrews are designed to move together because they are driven by a single motor. Should any of the jackscrews fail such that the conveyance loading car lifting platform is tilted, the angle would not be enough to cause the Waste Containers to dislodge from the facility pallet.

2.6.3.2 Underground

The UG Waste Handling and emplacement equipment consists of diesel-powered transporters, forklifts, and forklift attachments.

2.6.3.2.1 Underground Transporter

The UG Transporter is a diesel-powered tractor-trailer with an articulating-frame steering system. The transporter has two sections: a front section consisting of the tractor cab and diesel engine and a rear section consisting of a flatbed trailer with a ball screw or chain-driven pallet transfer mechanism mounted in the middle of the bed. The pallet transfer mechanism is designed to handle a load of 28,000 pounds. The tractor has a hydraulic power-steering system with a direct-drive hydraulic pump, an orbital valve operated by the steering wheel, and two steering cylinders located at the articulated joint. The hydraulic

fluid reservoir capacity is 20 gallons. The UG Transporter has a 35-gallon fuel tank and an automatic dry chemical FSS.

The automatic FSS on the UG Transporter consists of a detection system that causes a compressed gas cartridge to actuate and fluidize the fire suppressant powder and forces the powder to the distribution network. The system is equipped with a control module that includes system status lights to indicate normal and trouble conditions.

The axle brakes are air-over-hydraulic disc brakes with a dual master cylinder and separate circuits for the front and rear brakes. There is also a driveline disc brake, which is used as a parking brake. The brake automatically sets on low air pressure. The brake can also be set manually from the tractor cab. The UG Transporter attaches the pallet transfer mechanism hook to the facility pallet and pulls the facility pallet onto the transporter trailer. During transport to the UG Disposal Room, the facility pallet is secured to the transporter trailer with the pallet mover hook, and side rails prevent side-to-side movement.

2.6.3.2.2 Underground Waste Handling Forklifts

There are two 6-ton diesel forklifts in the UG that can be equipped with push/pull attachments. The 6-ton diesel forklifts equipped with push/pull attachments capable of handling 8,500 pounds are provided to remove CH Waste assemblies, excluding SLB2, from the UG Transporter and emplace CH Waste assemblies into the waste array. The 6-ton diesel forklift has a 24-gallon hydraulic fluid reservoir and a 37-gallon diesel fuel tank.

A 7.5-ton diesel forklift is used in the UG to handle and emplace approved configurations of MgO super sacks. The 7.5-ton forklift can be equipped with push/pull attachments and has a 24-gallon hydraulic fluid reservoir and a 37-gallon diesel fuel tank.

Diesel forklifts used for UG Waste Handling are equipped with automatic dry chemical FSSs. The automatic FSS on the forklifts has the same features as those on the UG Transporter.

A 13-ton diesel-powered forklift is used to offload SLB2s from the UG Transporter and emplace them into the waste array. The 13-ton forklift is equipped with an automatic FSS and 69-inch-long tines that are used to offload SLB2s. This is achieved by inserting the fork tines between the skids of an SLB2 and lifting the SLB2 from the facility pallet. The 13-ton forklift has a 78-gallon hydraulic fluid reservoir and a 57-gallon diesel fuel tank enclosed in the engine compartment.

2.6.3.2.3 Push/Pull Attachments

The push/pull attachments (Figure 2.6-28 and Figure 2.6-29) are used with a 6-ton forklift to remove the CH Waste Containers, excluding SLB2, from the UG Transporter and emplace the waste in the waste stack. The push/pull attachment shown in Figure 2.6-28 is connected to the forklift front carriage, which requires the removal of the forklift tines. The push/pull attachment shown in Figure 2.6-29 is used to place the MgO super sacks on top of the waste stacks and is installed on the forklift tines. Both types of attachments have a gripper that grips the edge of the slip-sheet on which the Waste Containers sit and a linkage assembly to pull or push the Waste Containers onto or off the platen. After the 6-ton forklift has pulled the Waste Containers from the transporter and has moved the Waste Containers to the emplacement location, the push/pull attachment pushes the Waste Containers into position after the forklift has positioned the platen at the proper height.

2.6.4 Contact-Handled Waste Handling Process

2.6.4.1 Contact-Handled Waste Receiving

On arrival at the gate of the WIPP facility, each incoming CH shipment is inspected to verify the shipment documentation and a security check is performed. A radiological survey of the shipping package is performed either at the gate or in the WHB Parking Area Unit. If radiation or contamination levels exceed the criteria in the *Waste Isolation Pilot Plant Radiation Safety Manual* (WP 12-5), subsequent activities include posting, decontamination, or both.

Following turnover of the shipping documentation, the driver parks the trailer in the WHB Parking Area Unit for CH shipping package trailers near the CH entrances to the WHB. The driver unhooks the tractor and is subsequently released. The number of loaded CH shipping packages on trailers in the WHB Parking Area Unit is coordinated with RH Waste Handling such that the WHB Parking Area Unit limits established in the HWFP are not exceeded.

The TRUPACT-II or HalfPACT shipping packages are unloaded from trailers outdoors using 13-ton battery-powered forklifts, transported through one of three entrance airlocks, and placed in a vacant TRUDOCK position. Each entrance airlock is sized to accommodate a CH shipping package on a 13-ton forklift or a YTV. The CH WH CVS maintains the CH Bay and Room 108 at a pressure lower than the ambient atmosphere to ensure airflow into the CH Bay, preventing the inadvertent release of airborne hazardous or radioactive materials to the outside. The doors of each airlock are interlocked such that only one door can be opened at a time. Typically, no more than a total of 13 loaded pallets and four CH shipping packages are allowed at one time in the CH processing area.

The TRUPACT-III shipping packages are unloaded from trailers outdoors using the 35-ton diesel-powered forklift and placed on a YTV. The loaded YTV then transports the TRUPACT-III into the CH Bay and then into Room 108.

2.6.4.2 TRUPACT-II or HalfPACT Processing

After the TRUPACT-II or HalfPACT is placed in a TRUDOCK the OCV tamper seal is removed. During OCV lid removal, a vacuum may be applied to the outer lid vent port to compress the lid toward the vessel body, enabling the locking ring to rotate, unlocking the lid. The underside of the OCV lid and top of the ICV lid are surveyed for contamination. The OCV lid is removed and placed in an adjacent laydown area using the TRUDOCK 6-ton crane and the ACGLF.

The vacuum pull process is repeated for the ICV lid and a radiological assessment filter is attached to the vent port tool, upstream of a HEPA roughing filter. The radiological assessment filter is checked for radioactive contamination. The TRUDOCK vent hood system is attached to the ICV lid and the lid is raised. The TRUDOCK vent hood system consists of a vent hood assembly, a HEPA filter assembly, a fan to provide airflow, ductwork, and a flexible hose. The TRUDOCK vent hood system provides atmospheric control and confinement of airborne radioactive material and minimizes personnel exposure to VOCs. The air from the vent hood is monitored by an alpha CAM before passing through the roughing filter and then HEPA filters. The air is then released to a Waste Handling ventilation exhaust system that, by design, is not configured to allow recirculation into the building and is exhausted through Station C and an elevated stack outside the WHB.

Before moving the ICV lid aside, contamination surveys under the vent hood are performed on the ICV lid and accessible Waste Container surfaces. If no contamination is detected, the vent hood is removed and the ICV lid is set aside using the TRUDOCK 6-ton crane and lifting fixture. Additional

contamination surveys are performed on the Waste Containers. If no contamination is detected, the TRUDOCK 6-ton crane is used to remove and transfer the Shipping Package payload to a prepositioned facility pallet. A typical TRUPACT-II contains 14 drums and a typical HalfPACT contains seven 55-gallon drums that are stretch wrapped or banded together into seven-packs. Each seven-pack, or waste assembly, sits on a molded slip-sheet made of high-density polyethylene or cardboard. A second slip-sheet is placed on top of the seven-pack and the entire assembly is held together by stretch wrap or banding.

Final contamination surveys are conducted and the identification numbers of the Waste Containers are recorded for transfer to the inventory tracking system. For inventory control purposes, CH Waste Container identification numbers are verified against the shipping documentation. Any inconsistencies are resolved with the generator before CH Waste is emplaced. The Shipping Package and Waste Containers are shipped back to the generator if the inconsistencies cannot be resolved. Waste Containers awaiting resolution of discrepancies are stored in the Shielded Storage Room. A damaged Waste Container is overpacked.

A 13-ton forklift or FTV transports the loaded facility pallet to the northeast or southwest corner of the CH Bay for storage. A maximum of seven loaded facility pallets of CH Waste is stored in one location at a time (i.e., northeast corner or southwest corner). An additional facility pallet of waste may be stored in the Shielded Storage Room and at each TRUDOCK. At the TRUDOCKs, the waste shall be stored either on a facility pallet or in the Shipping Package. A minimum aisle space of 44 inches is maintained between facility pallets to allow unobstructed movement of fire-fighting personnel, spill-control equipment, and decontamination equipment that may be used in the event of an off-normal event.

A site-derived waste storage area on the north or southwest wall of the CH Bay is used for collecting derived waste from Waste Handling processes in the WHB. The maximum volume allowed to be stored in the derived waste storage area is approximately 65 ft^3.

Normal operations for receipt and emplacement of drum assemblies containing CH Waste do not include the removal of empty drums received as dunnage in the drum assembly. Normal operations do not involve the opening of Waste Containers. Drum assemblies, consisting entirely of empty drums, are dispositioned in the most cost-effective manner but are typically returned to generator sites.

After the waste assemblies are removed from the shipping package, a final radiological survey and maintenance inspection are performed on the shipping package and the unit is prepared for reuse. When the shipping package is ready for reuse, it is removed from the WHB, loaded on a trailer, and prepared for shipment to a generator site.

2.6.4.3 TRUPACT-III Processing

The YTV transporting a TRUPACT-III shipping package enters the CH Bay through an outside airlock and traverses the CH Bay through Airlock 107 into Room 108 for processing.

The YTV transporting a TRUPACT-III is driven to the bolting station where the shock absorbing cover is removed. The air inside the TRUPACT-III is sampled with a radiological assessment filter. The radiological assessment filter confirms levels are consistent with no TRU radioactivity in the TRUPACT-III before the closure lid is removed.

The bolting robot detensions and removes the bolts from the TRUPACT-III cover. The bolts may also be detensioned and removed by Waste Handling personnel without the assistance of the bolting robot. The exhaust hood is installed over the top of the TRUPACT-III cover and the exhaust flow started. The

exhaust hood ensures that any radioactive contamination or airborne radioactivity inside the TRUPACT-III is exhausted into the Battery Exhaust System, which is also HEPA filtered, before discharging to the atmosphere. The exhaust goes through Station C and an elevated stack outside the WHB. A CAM, sampling the exhaust stream, provides an indication of whether there is airborne radioactivity inside the TRUPACT-III. Radiological contamination surveys of the interior surface of the TRUPACT-III cover are performed. If contamination levels are below release limits, the TRUPACT-III cover is then placed on the cover stand.

The TRUPACT-III is positioned at the Payload Transfer Station. The shipping pallet with its SLB2 is extracted from the TRUPACT-III and positioned on the transfer table. The SLB2 is unlatched from the TRUPACT-III pallet and the Payload Transfer Station separates the SLB2 from the TRUPACT-III pallet. The TRUPACT-III pallet is returned to the TRUPACT-III and the YTV is driven back to the bolting station.

The transfer table is positioned out of the lifting area. A FTV with a facility pallet is positioned under the SLB2 and the SLB2 is placed onto the facility pallet. The SLB2 is secured to the facility pallet. The loaded facility pallet is removed from Room 108 and routed to the CH Bay storage area or to the CLR.

At the bolting station, radiological surveys of the interior surfaces of the empty TRUPACT-III are performed. If no contamination is detected, the closure lid and overpack cover are reinstalled and the bolting robot reinstalls the securing bolts and torques the bolts to the specifications. The YTV transports the empty TRUPACT-III to the WHB Parking Area Unit to be loaded on its transport trailer.

2.6.4.4 Conveyance Loading Room

A facility pallet of waste assemblies is moved by a 13-ton forklift or by FTV into the CLR. The 13-ton forklift places the loaded facility pallet on the conveyance loading car. The conveyance loading car must be removed from the CLR before the FTV enters the CLR and positions itself on the rails. The CLR has two sets of doors through which the waste assemblies are moved; one set separates the CLR from the CH Bay and the other set separates the CLR from the Waste Shaft Collar Room. The doors are interlocked such that only one set of doors may be opened at a time. The Waste Shaft Collar Room doors must be opened and the CH Bay doors closed before moving a loaded conveyance loading car or FTV into the Waste Shaft Collar Room. Waste Operations must verify the Waste Shaft Conveyance is at the Waste Shaft Collar before moving the loaded conveyance loading car or FTV into the Waste Shaft Collar Room.

2.6.4.5 Waste Shaft Collar Room

Pivot rails at the Waste Shaft Collar, which are rotated to the horizontal position when loading the Waste Shaft Conveyance, are rotated vertically when not in use. The conveyance loading car or FTV moves the loaded facility pallet onto the Waste Shaft Conveyance. When the conveyance loading car or FTV has positioned the facility pallet on the Waste Shaft Conveyance, it lowers its deck until the loaded facility pallet rests on the facility pallet chairs on the Waste Shaft Conveyance. The conveyance loading car or FTV is moved off the Waste Shaft Conveyance and returned to the CLR. The Waste Hoist lowers the Waste Shaft Conveyance to the Waste Shaft Station.

2.6.4.6 Waste Shaft Station

When the Waste Shaft Conveyance is at the Waste Shaft Station, the shaft station gates are opened and the UG Transporter backs up to the conveyance. The facility pallet is pulled onto the UG Transporter trailer and moved to the active Disposal Room. A Vehicle Exclusion Zone (VEZ) and a procedurally controlled transport notification system alert personnel and vehicle/equipment that waste is in transit from

the Waste Shaft Station to the active Disposal Room. Personnel and vehicles are required to move to a crosscut or leave the disposal path/area to minimize the likelihood of collisions with the transporter.

2.6.4.7 Underground Contact-Handled Waste Disposal Area

In the UG, waste is transported from the Waste Shaft Station within a VEZ to the ventilation intake drift of the active Disposal Room. When RH Waste emplacement or borehole drilling is ongoing in the Disposal Room air intake drift, CH Waste may be rerouted from the intake to the exhaust side of the panel and back to the intake side through non-active Disposal Rooms. Operations personnel administratively control access to the active Disposal Room to coordinate RH and CH disposal activities.

At the waste Disposal Room, the Waste Containers, excluding the SLB2, are removed from the facility pallet on the UG Transporter using a diesel-powered forklift with a push/pull attachment and placed at the Waste Face. A 13-ton forklift with 69-inch long forks removes the SLB2 from the facility pallet and places the SLB2 at the Waste Face. In the event of UG contamination, a contaminated zone boundary and a radiation buffer area will be established. The waste transfer from the facility pallet to the forklift will occur at the contaminated zone / radiation buffer area boundary. Empty facility pallets destined for the surface will be surveyed and decontaminated if necessary.

The CH Waste Containers are stacked with assemblies of drums, SWBs, and TDOPs intermixed, with TDOPs and SLB2s on the bottom row. For stability, 85-gallon drums in four-pack assemblies and 100-gallon drums in three-pack assemblies are placed on the top row of the waste stack or on like assemblies (shown in Figure 2.6-30). Shielded container assemblies are only stacked on the floor against the wall or on each other, for a maximum of two high. One super sack of MgO is typically placed on every other waste column. Additional MgO super sacks may be added as required. Empty facility pallets can be stored in the UG or returned to the surface.

The waste is emplaced in each room, starting in Room 7, of a panel until the panel is full. When the panel is full, the panel closure system is installed. Panels 9 and 10 may be used to reach the full authorized capacity of 6.2 million ft^3. Panels 1, 2, and 5 have been filled and isolated with an explosion-isolation wall. Panels 3 and 4 have been isolated with a substantial barrier and isolation bulkhead. Once a waste Disposal Room is mined and initial ground control established, ventilation control equipment is constructed at the exit of each Disposal Room.

When combined CH and RH operations take place in a panel, RH emplacement boreholes are drilled into the ribs of rooms in advance of disposal operations. A ventilation control point consisting of a bulkhead with a ventilation regulator is also installed in each room. The ventilation control point may also include man doors and/or vehicle doors. For CH Waste emplacement, the ventilation control point is installed on the exhaust side of the room. The ventilation control point may be located as necessary to allow RH equipment or RH Waste movement to access boreholes in the intake and exhaust portions of a room. RH Waste emplacement precedes CH Waste emplacement to preclude CH Waste from blocking RH borehole access.

CH Waste emplacement starts at the exhaust side of an active Disposal Room and proceeds through the room to the intake. The sequence of RH emplacement varies to minimize RH equipment moves because of its size. Brattice cloth and chain-link ventilation barricades, are installed to isolate a filled room from the ventilation system. This process is repeated for the remaining rooms until the panel is filled.

When a panel is filled, the panel closure system or substantial barriers and isolation bulkheads are constructed in the entries to the filled panels, in accordance with the Closure Plan in the HWFP.

2.6.5 Process Interruptions

The CH and RH Waste Handling process interruptions fall into two categories: routine and emergency/abnormal.

2.6.5.1 Routine Interruptions

Routine process interruptions include inspections and scheduled and unscheduled maintenance. Actions taken during routine process interruptions are conducted in accordance with established procedures. Plant parameters are monitored to ensure that radioactive and non-radioactive HAZMAT releases do not occur.

2.6.5.2 Emergency/Abnormal Interruptions

Emergency interruptions are process interruptions that occur because of operational accidents, man-made external events, or natural events that include earthquakes or severe weather. Chapter 15.0 discusses the emergency management program, which reflects lessons learned for the February 2014 fire event.

Plant operations may be suspended following an earthquake. In the event of earthquakes involving accelerations at an appreciable fraction of the DBE (e.g., 0.015 g compared to the 0.1 g DBE), some systems automatically shutdown (e.g., WHB ventilation dampers), and inspection of structures and equipment is required before resuming normal operations. The length of the interruption will depend on the results of the inspection.

Plant operations may be suspended during a tornado or a high-wind condition warning. A tornado or high-wind condition warning is based on information provided by the National Weather Service or local observation. If a severe weather emergency condition occurs at the WIPP site, inspections of structures and equipment may be required before resuming normal operations. The length of the interruption depends on the results of the inspection.

Normal plant operations may be suspended in the event of a fire. Chapter 11.0, “Operational Safety,” describes the response to a fire in the UG. The occurrence of a fire may require evacuation of personnel and response by appropriate emergency personnel. After extinguishing the fire, the area will be surveyed, controls will be established to mitigate any problems, the incident may be investigated, the affected area may be remediated, and the area will be returned to normal operations.

Abnormal interruptions include unplanned and unexpected changes in a process condition or variable adversely affecting safety, security, environment, or health sufficient to require stopping Waste Handling or putting Waste Handling on hold for greater than four hours.

Waste retrieval from the UG disposal area is considered an abnormal interruption. In the event that waste needs to be retrieved from the UG, a work plan is generated and sent to CBFO for approval.

In the event of other abnormal interruptions, Waste Handling or any other site activity is stopped, the site is placed in a safe condition, assessments may be conducted, and corrective actions may be enacted before resuming operations. For example, the loss of offsite power affects all site electrical equipment. Any suspended load is maintained “as is” until power is returned or it can be safely lowered to a safer configuration. When power returns, loads are lowered. All cranes and hoists hold their loads on loss of power. A manually started diesel generator supplies selected loads as described in Section 2.9.1.2. Some equipment, such as the CMS and the UG CAMs, have an uninterruptible power supply (UPS) or battery backup for loss of power.

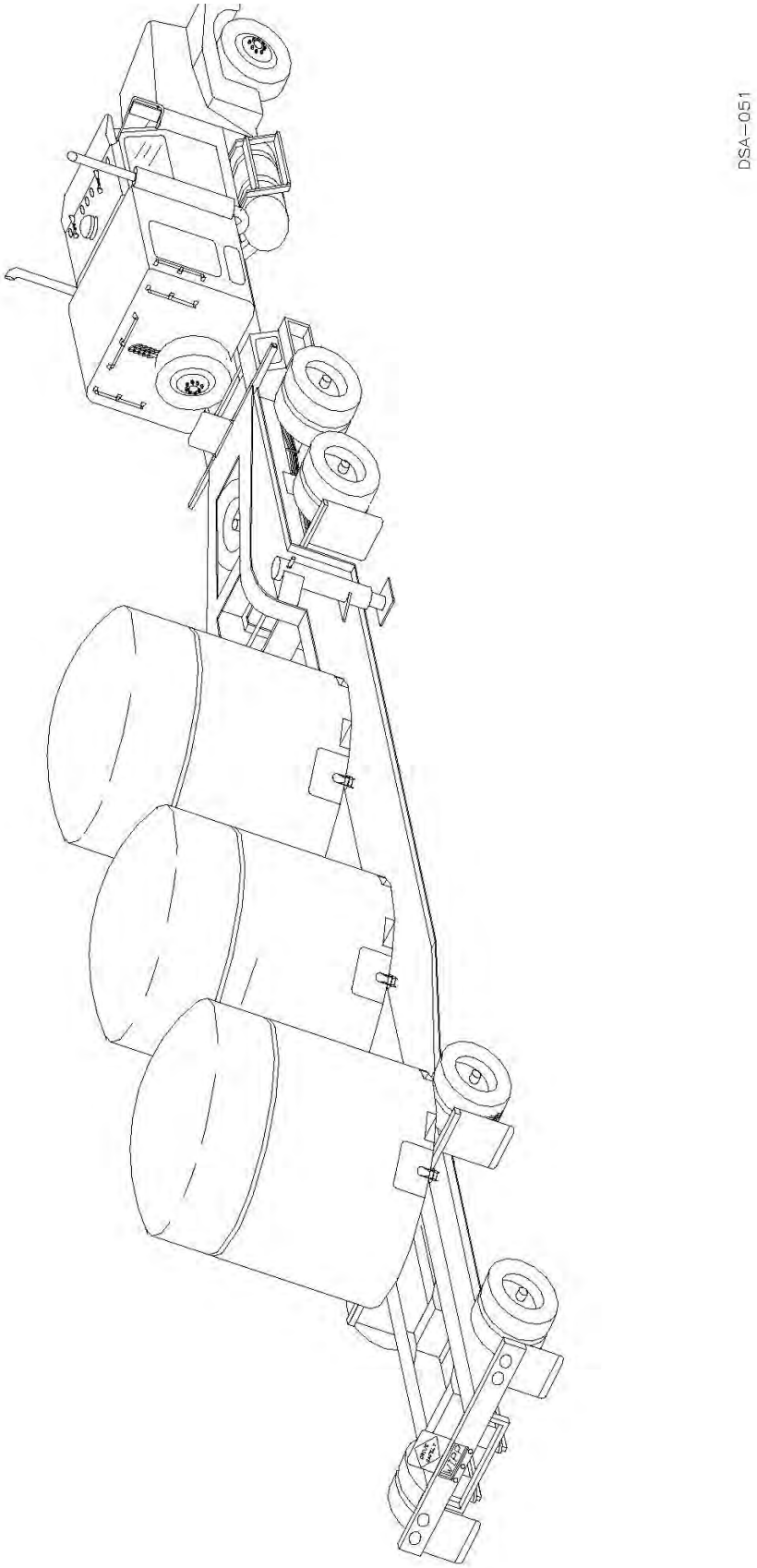

Figure 2.6-1. Truck, TRUPACT-IIs, and Trailer

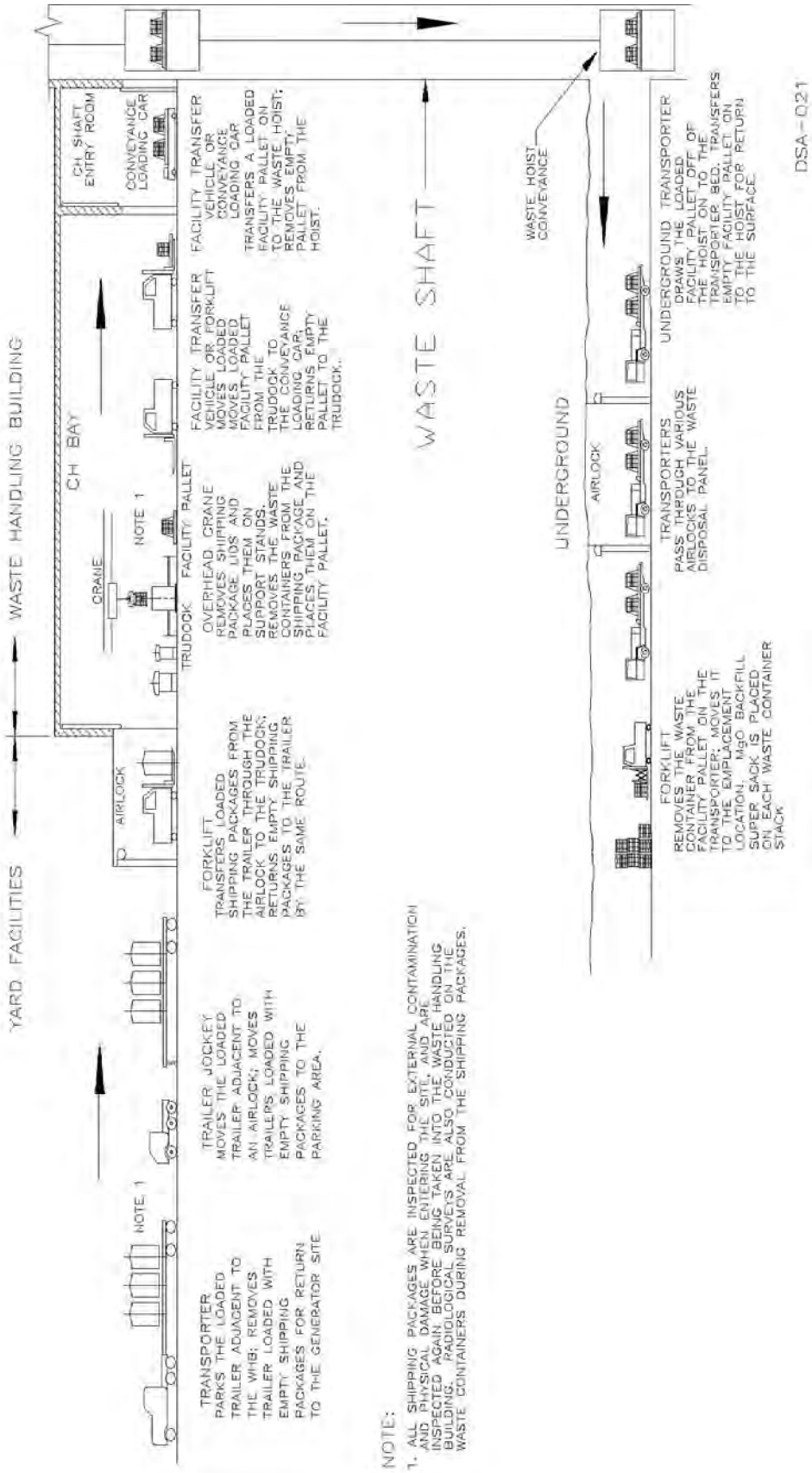

Figure 2.6-2. Contact-Handled Waste Handling Process

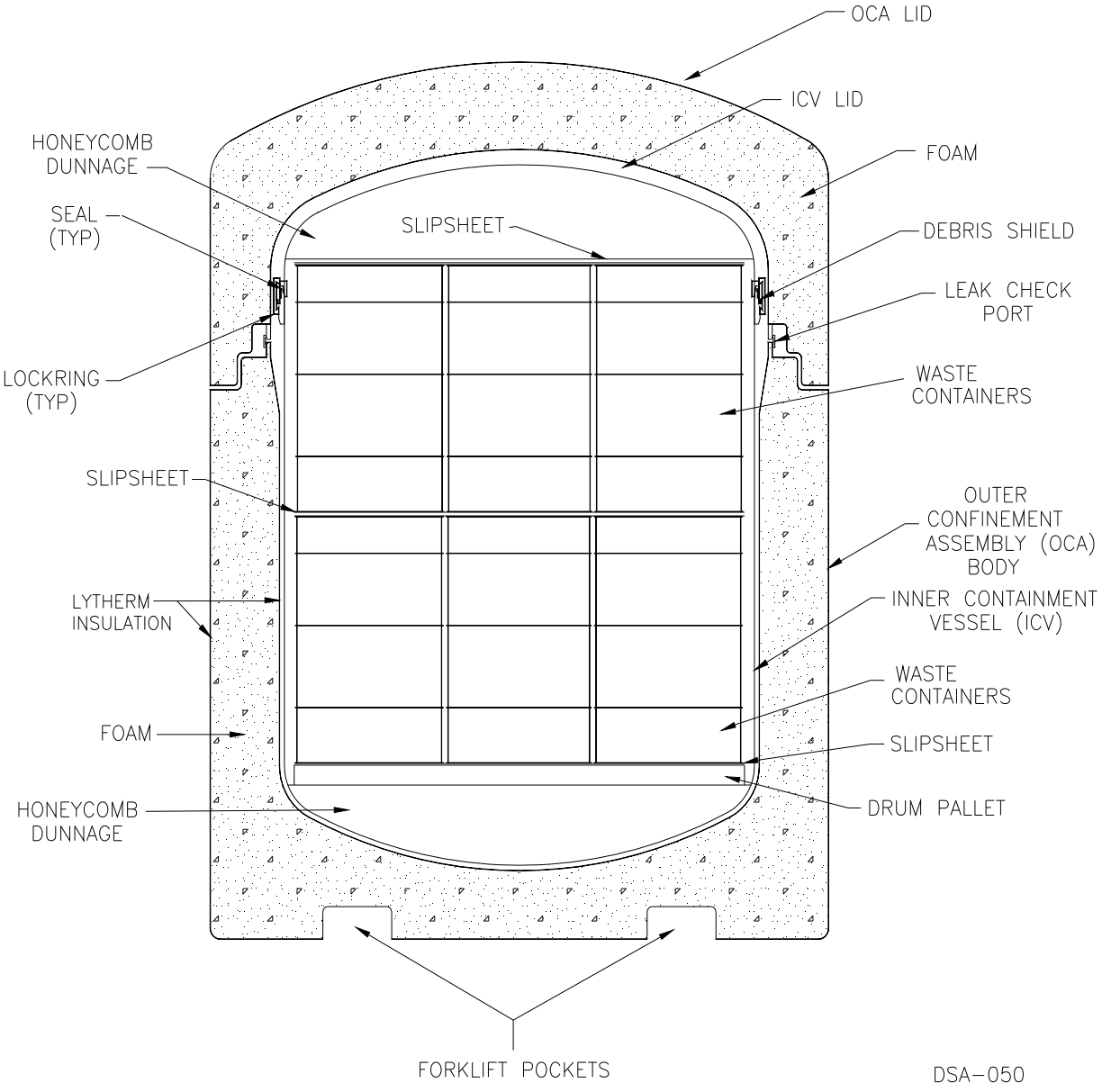

Figure 2.6-3. TRUPACT-II Shipping Package

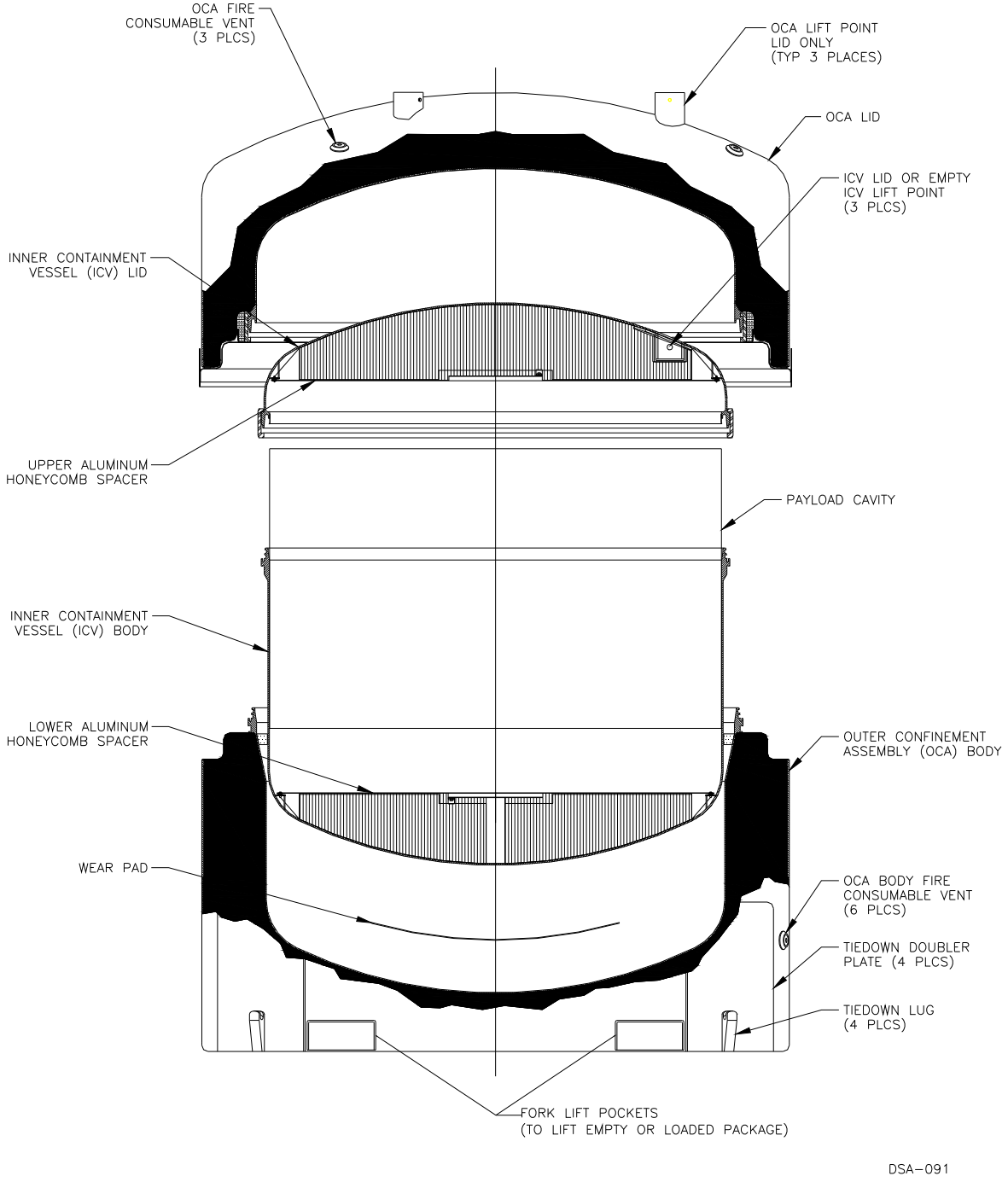

Figure 2.6-4. HalfPACT Shipping Package

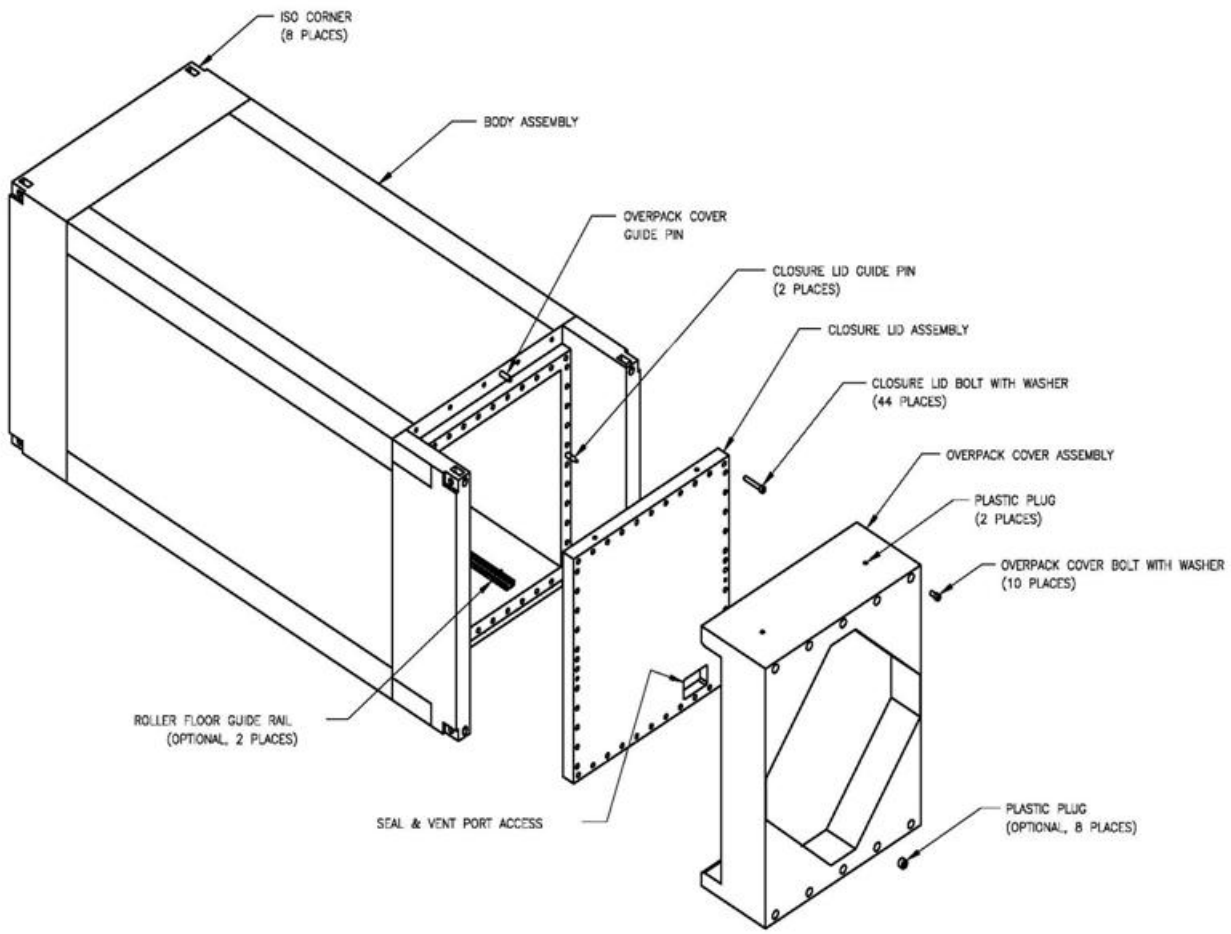

Figure 2.6-5. TRUPACT-III Shipping Package

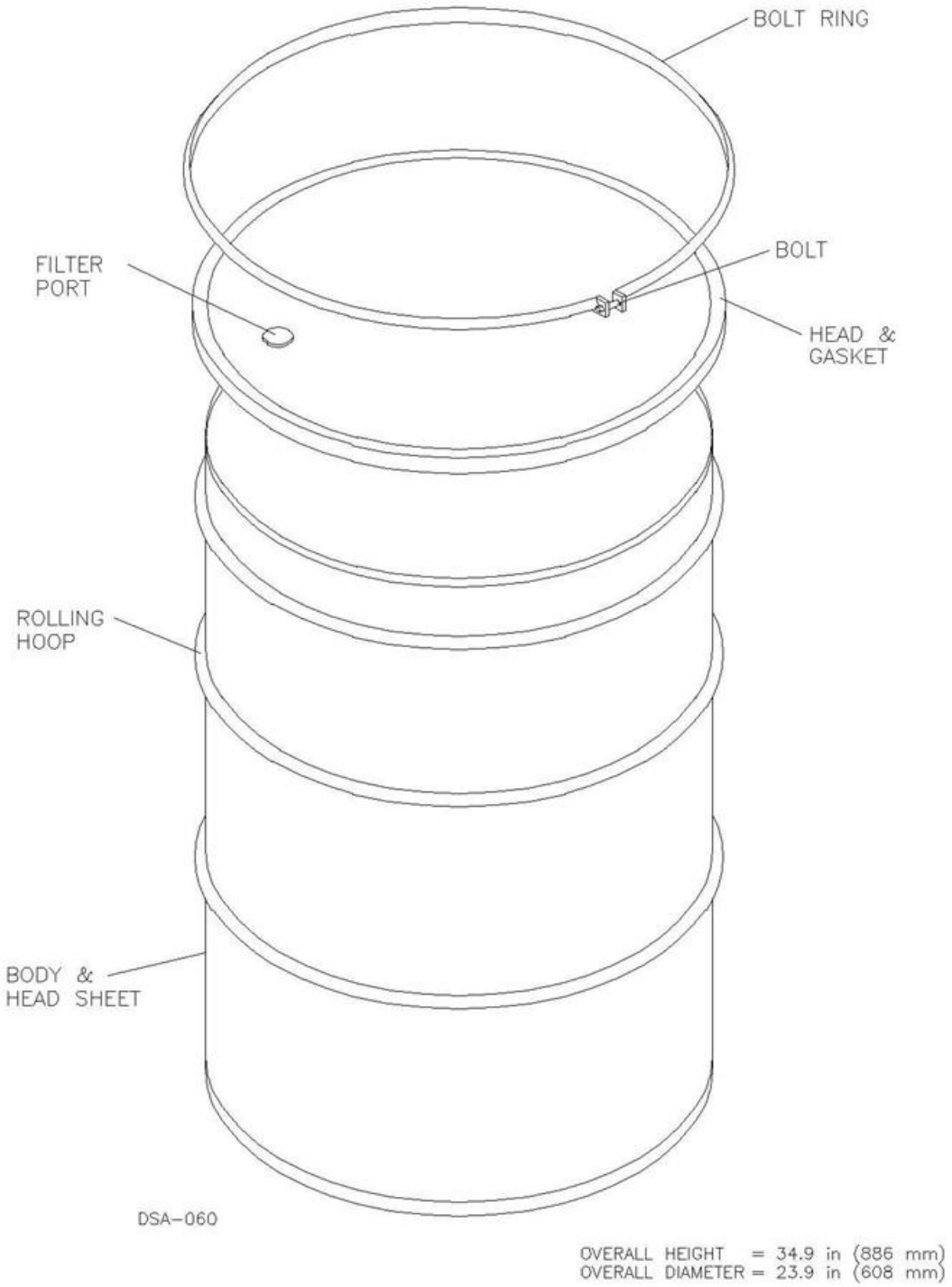

Figure 2.6-6. 55-gallon Drum

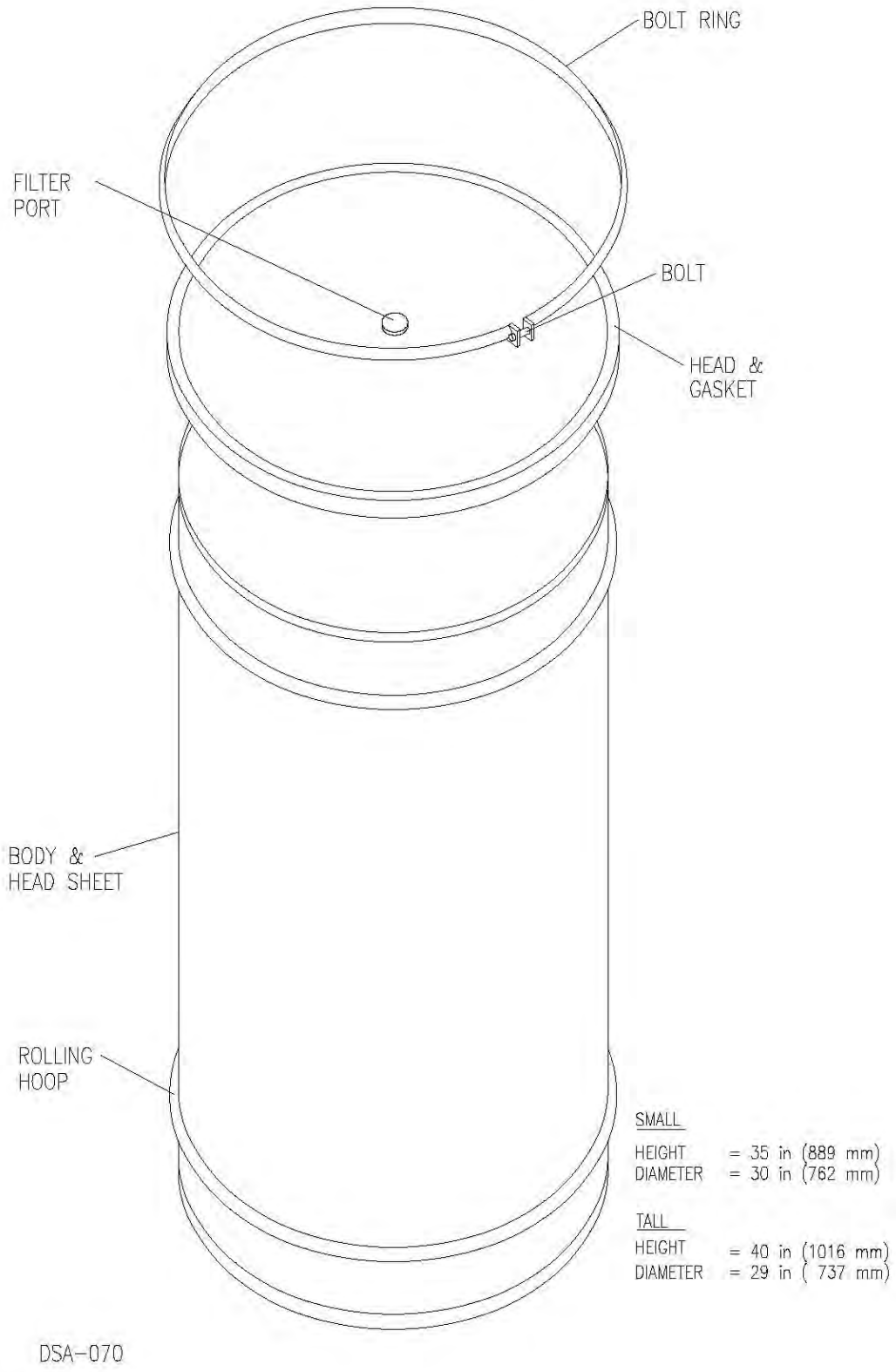

Figure 2.6-7. 85-gallon Drum

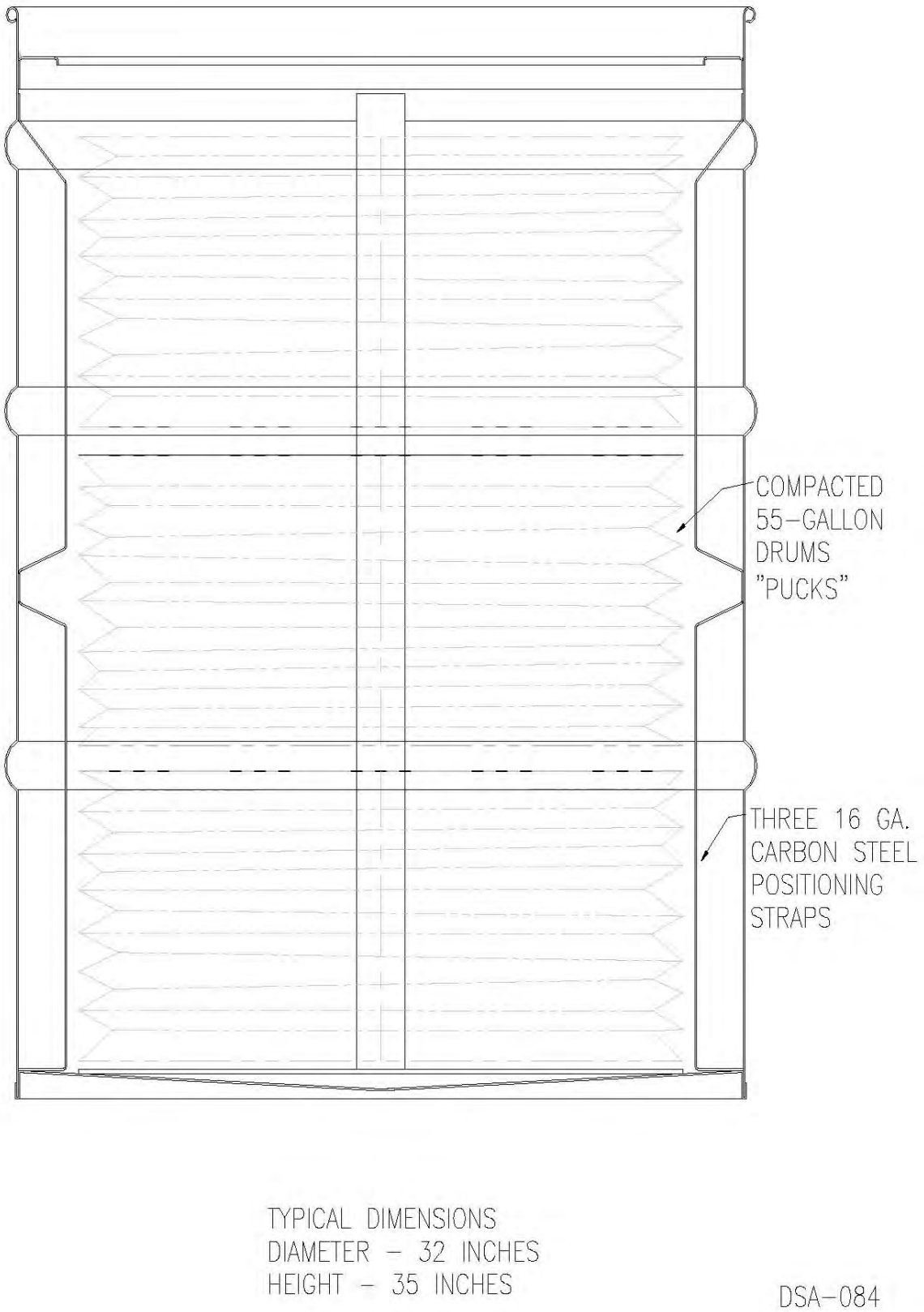

Figure 2.6-8. 100-gallon Drum

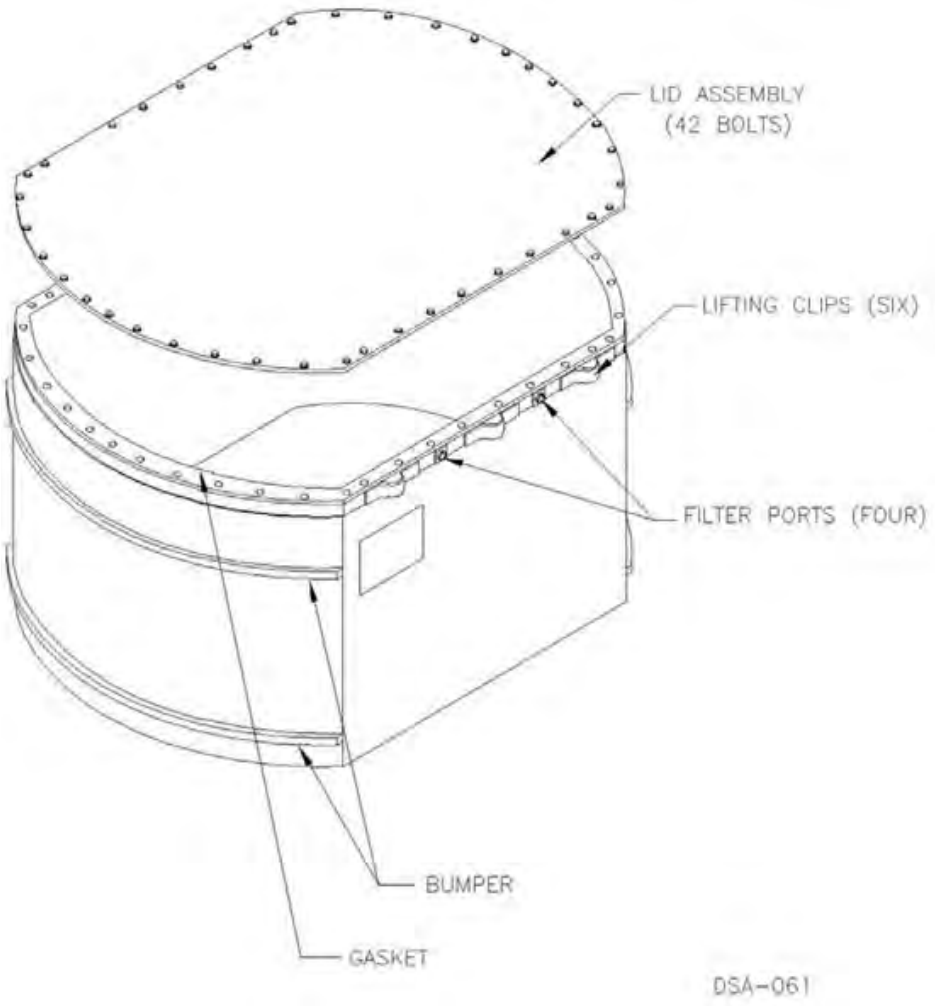

Figure 2.6-9. Standard Waste Box

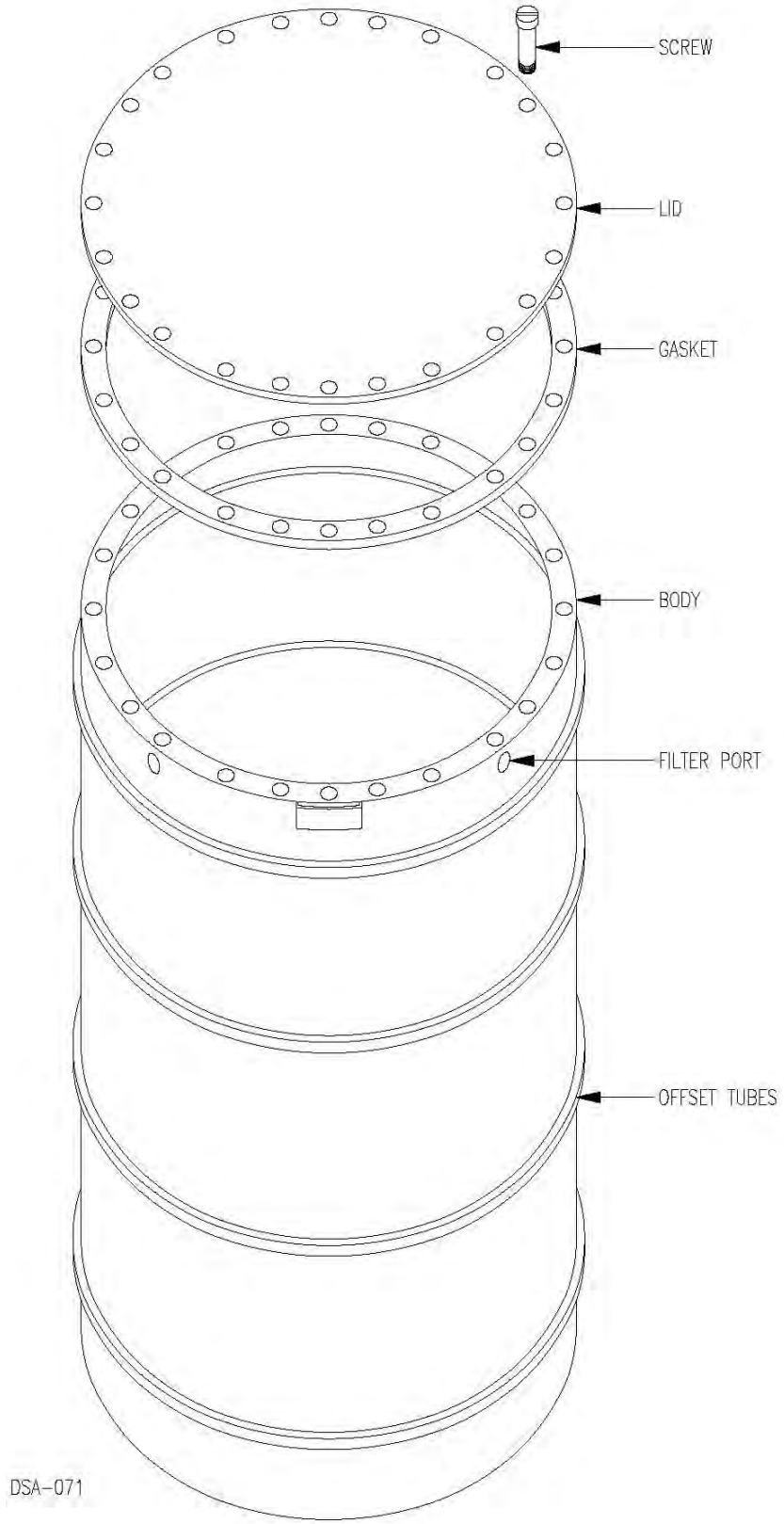

Figure 2.6-10. 10-Drum Overpack

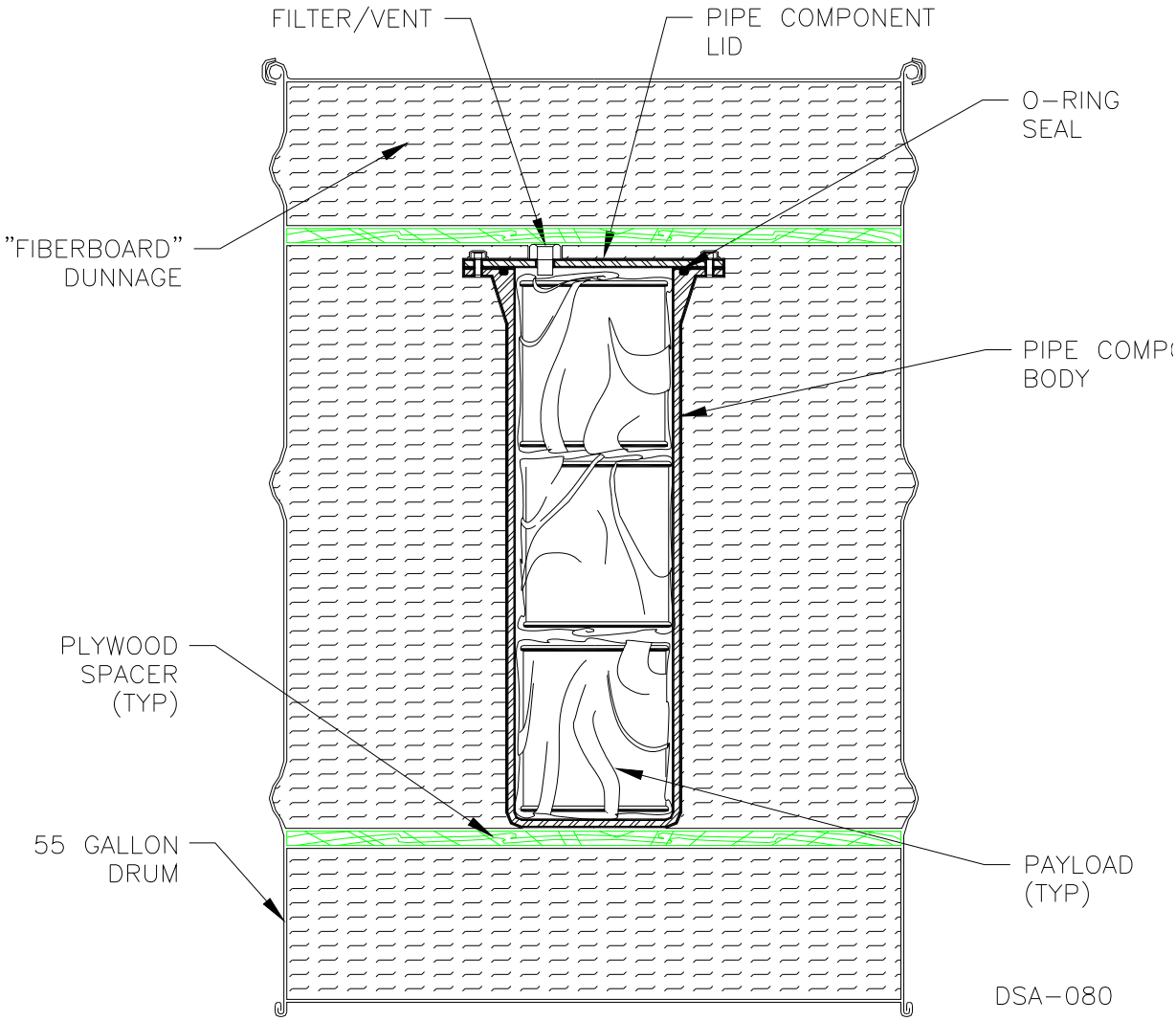

Figure 2.6-11. Standard Pipe Overpack

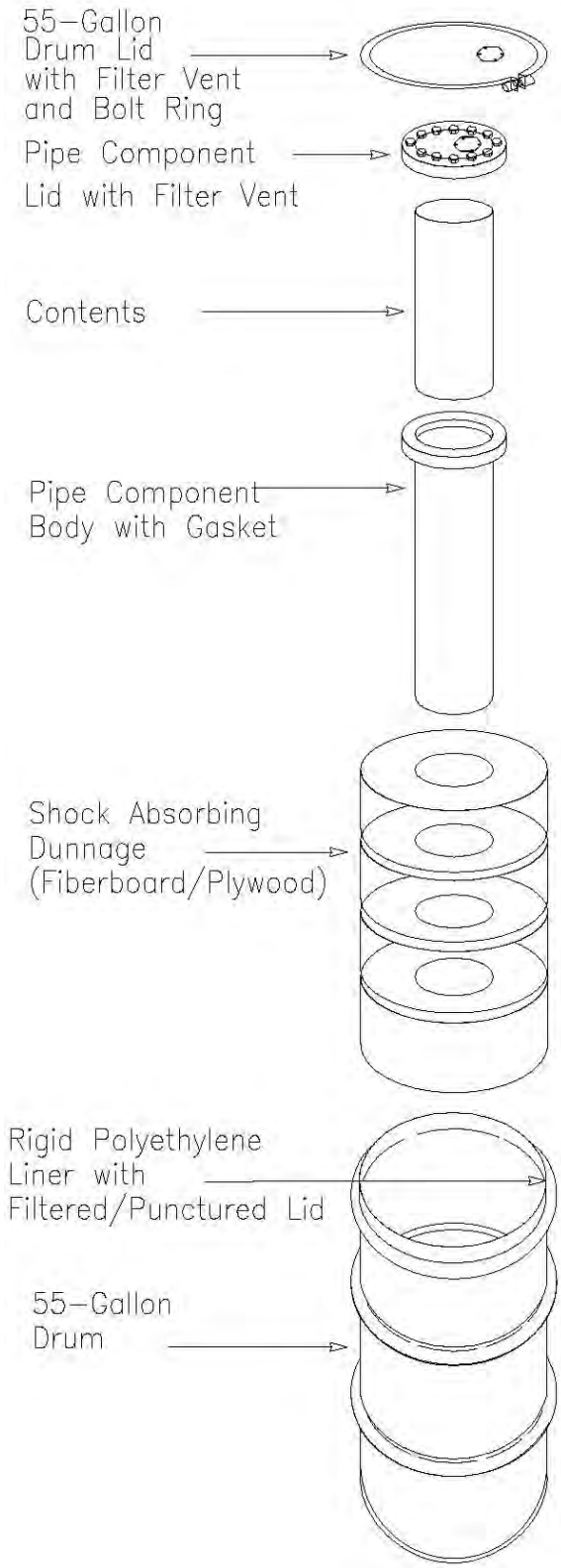

Figure 2.6-12. Standard Pipe Overpack Components

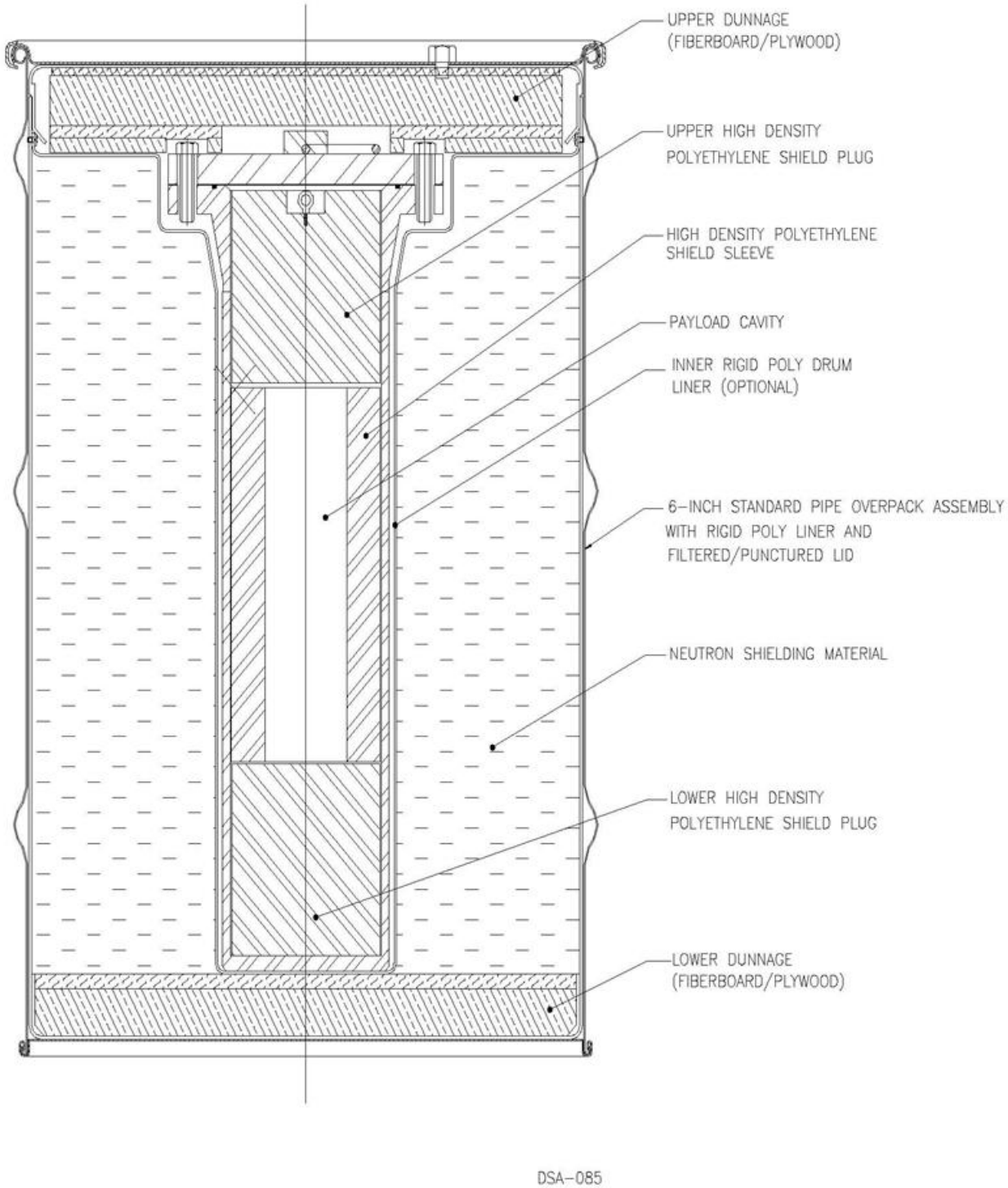

Figure 2.6-13. S100 Pipe Overpack

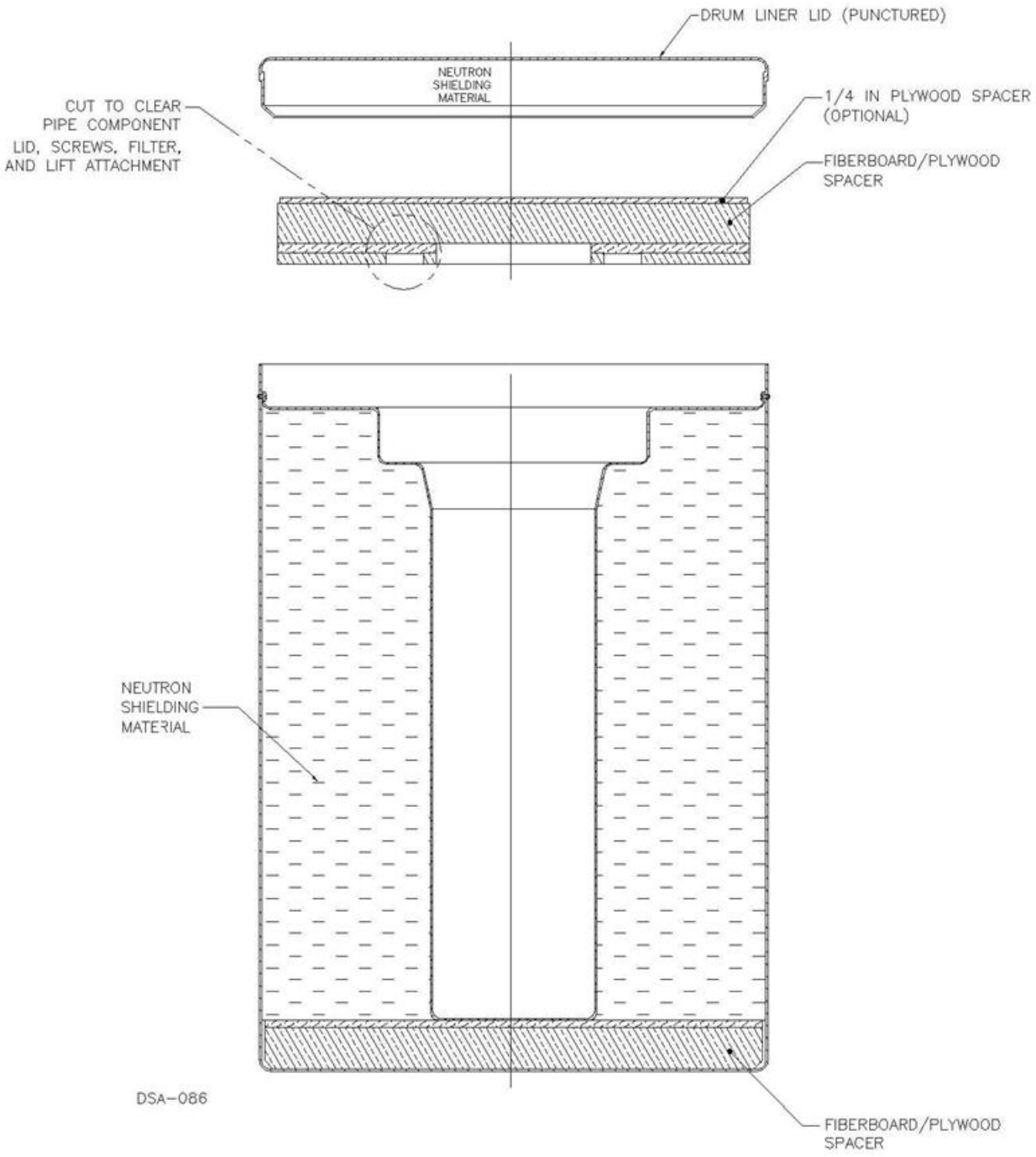

Figure 2.6-14. S300 Pipe Overpack Shield Insert

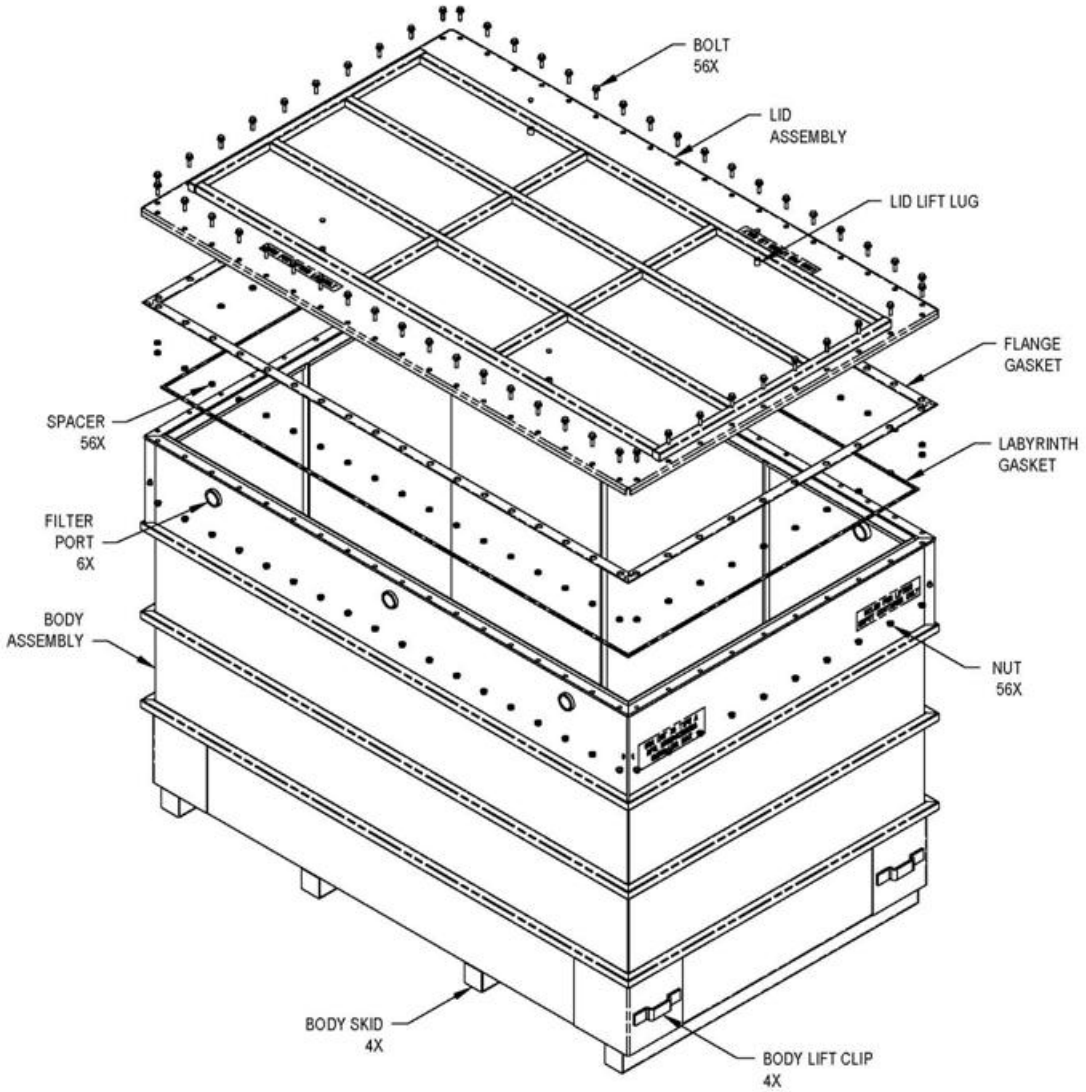

Figure 2.6-15. Standard Large Box 2

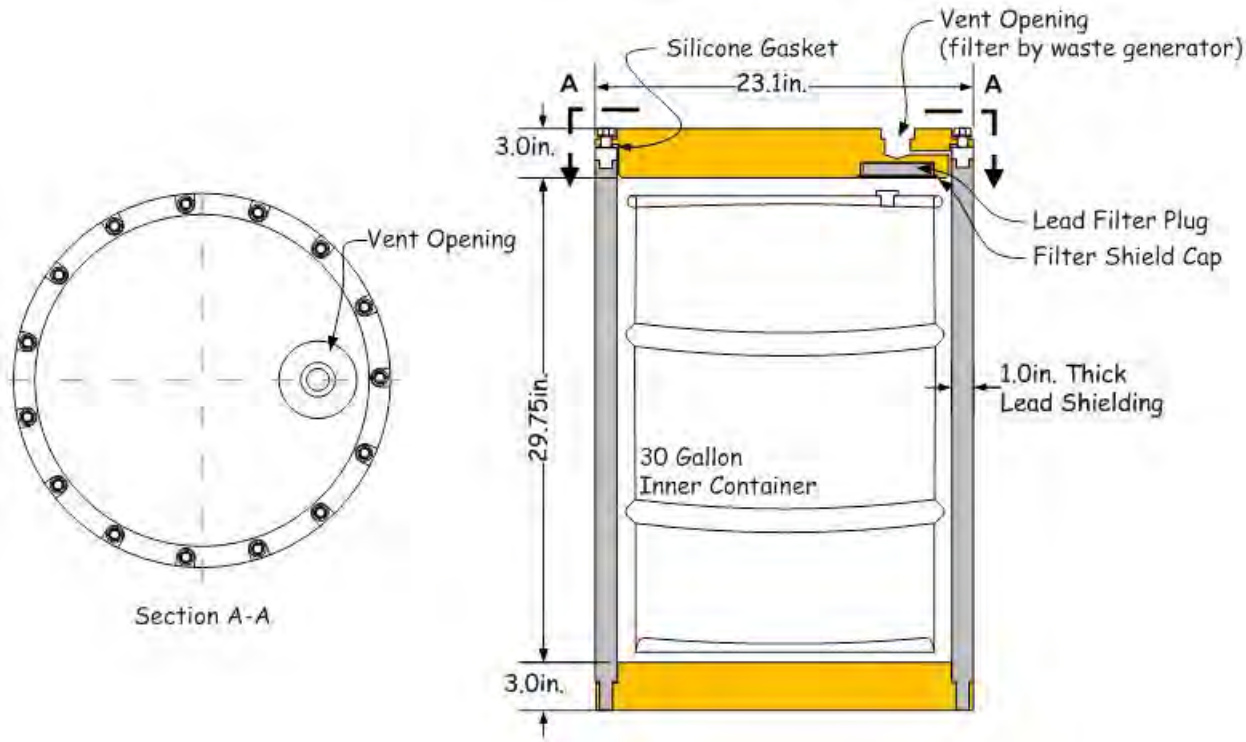

Figure 2.6-15a. Shielded Container

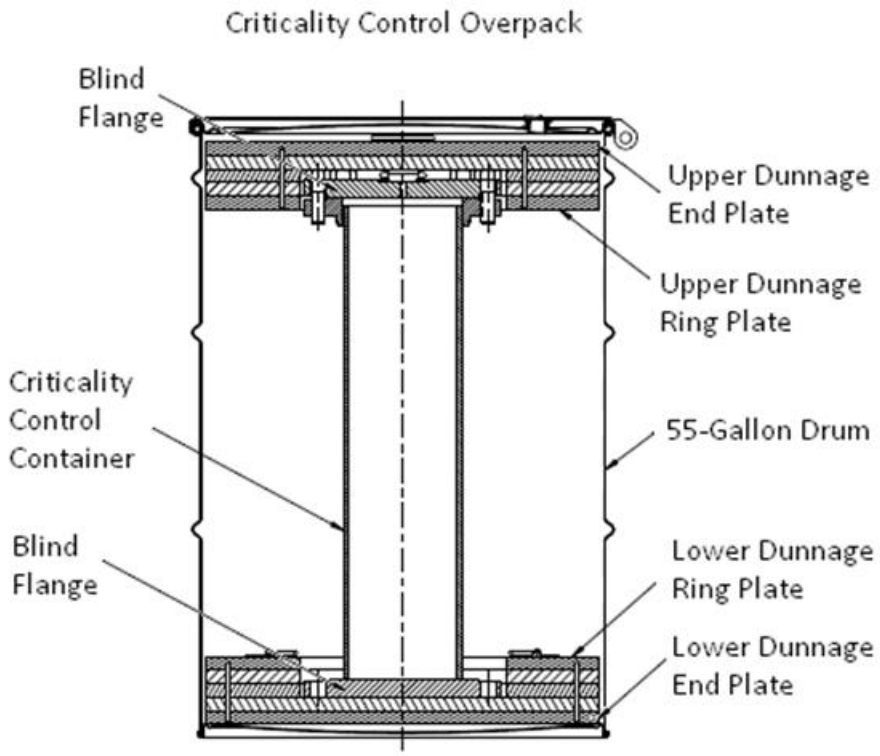

Figure 2.6-15b. Criticality Control Overpack

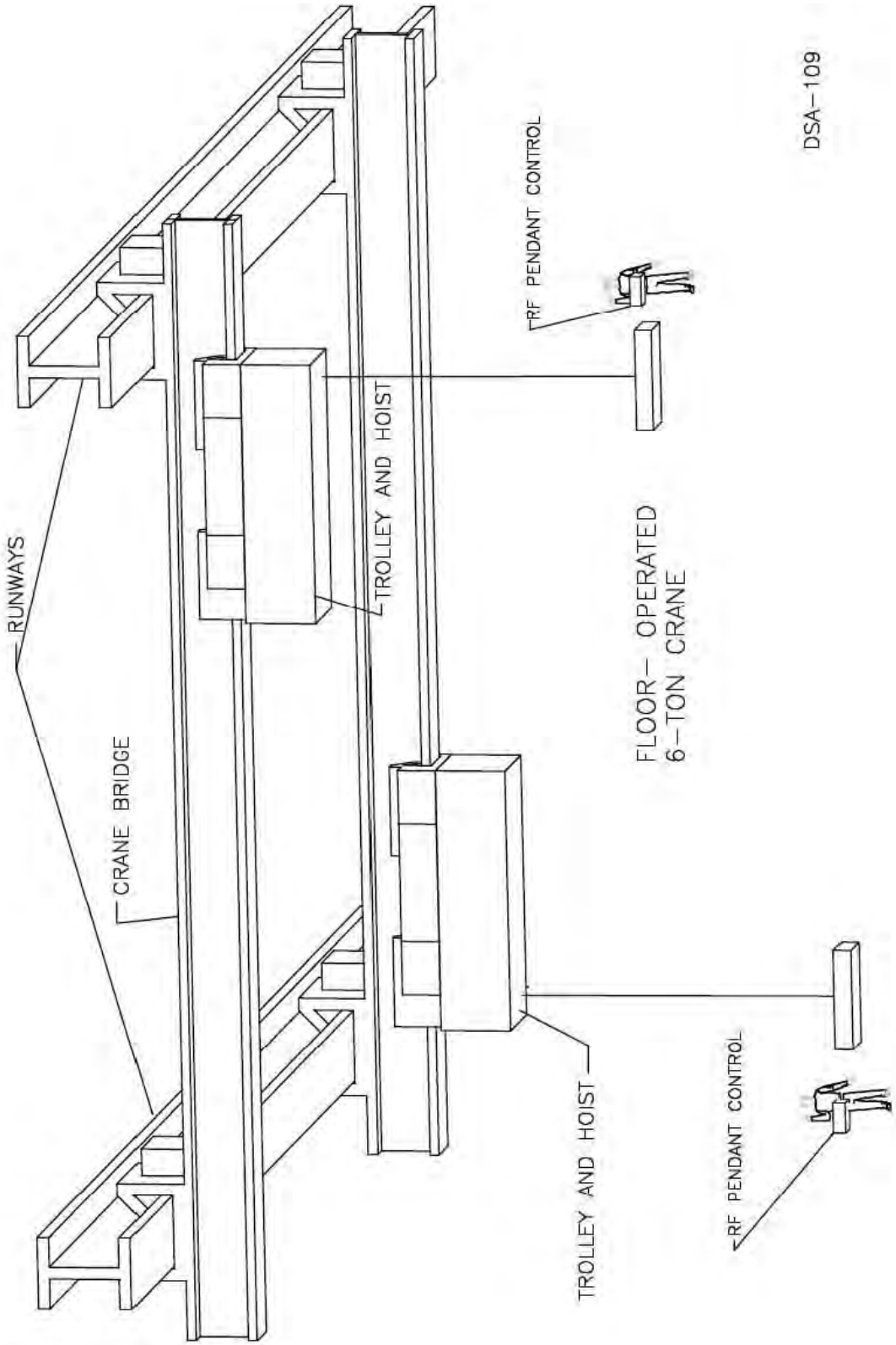

Figure 2.6-16. Typical Overhead Crane

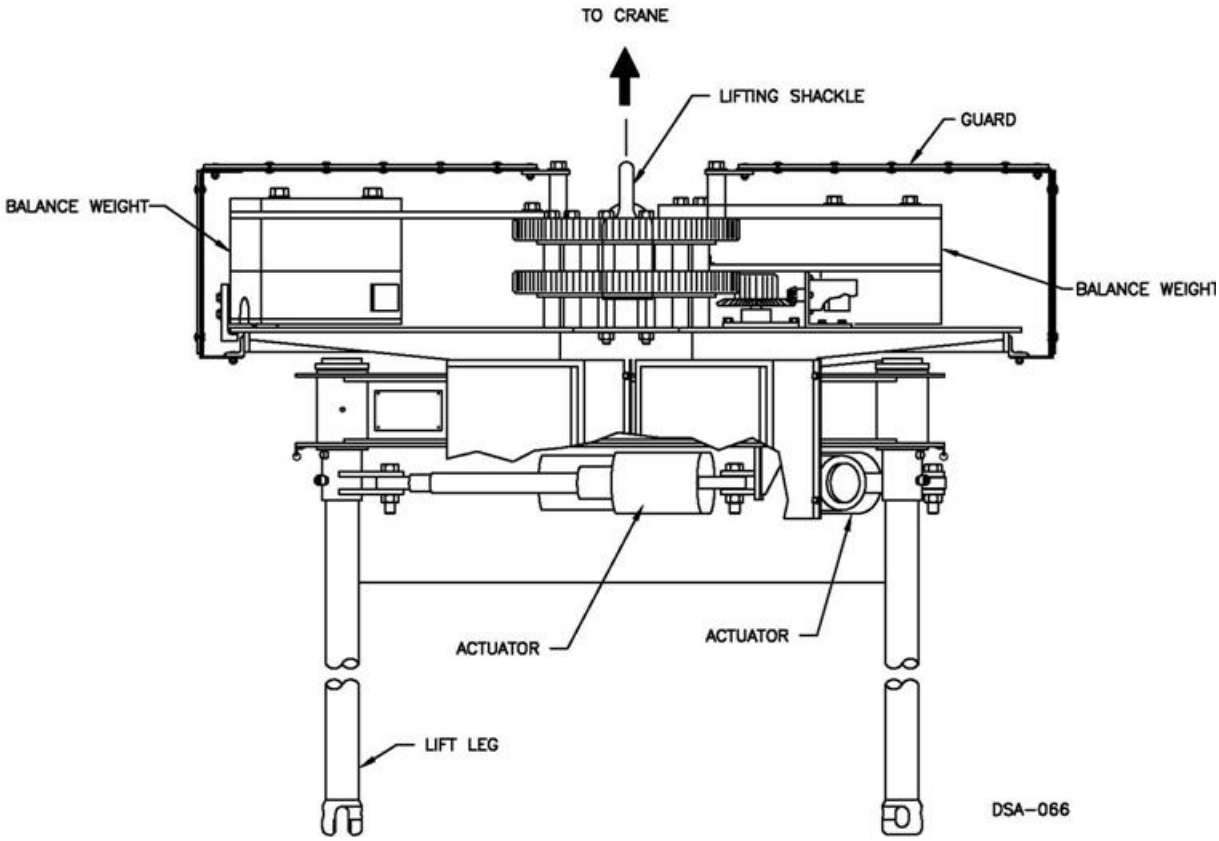

Figure 2.6-17. Adjustable Center-of-Gravity Lifting Fixture

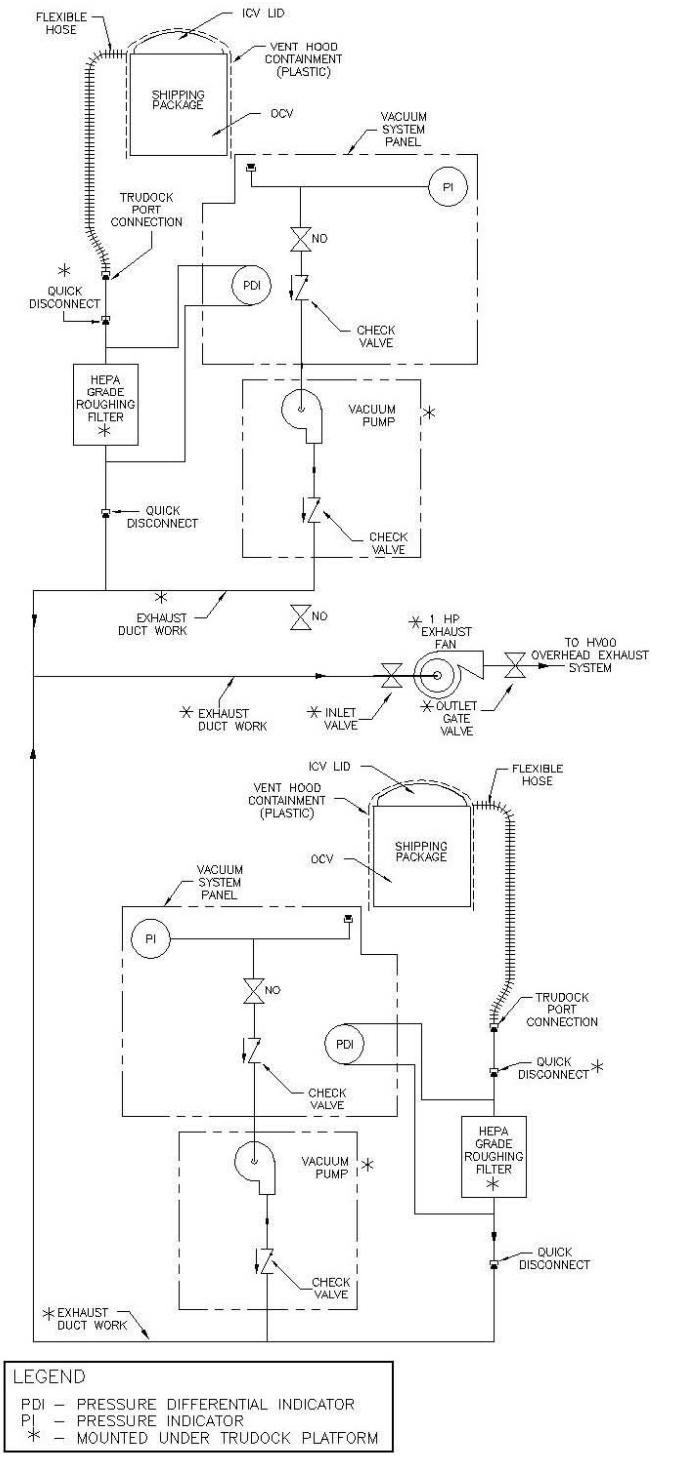

Figure 2.6-18. TRUDOCK Vent Hood System

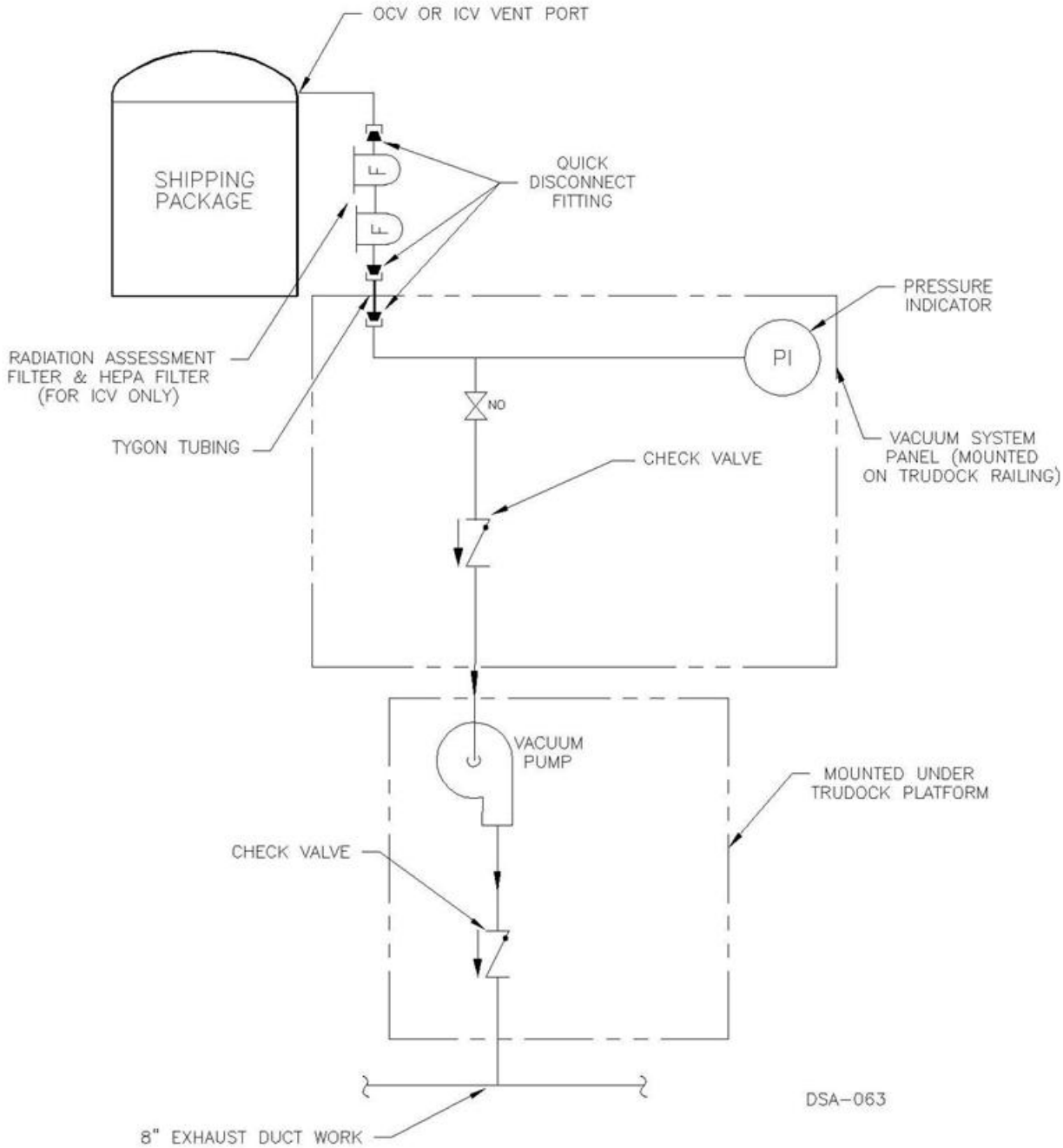

Figure 2.6-19. TRUDOCK Vacuum System

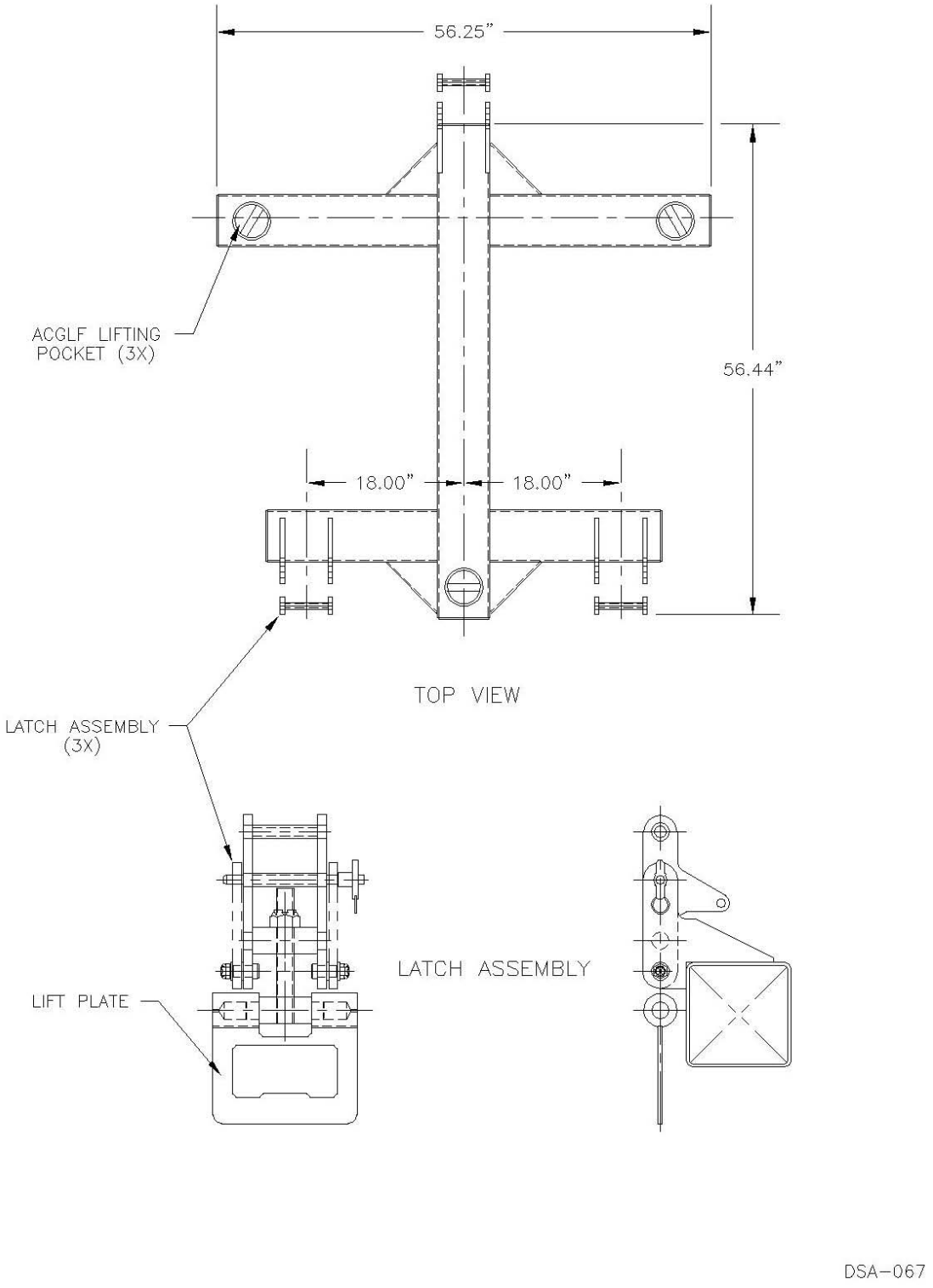

Figure 2.6-20. Standard Waste Box Lifting Fixture Adapter

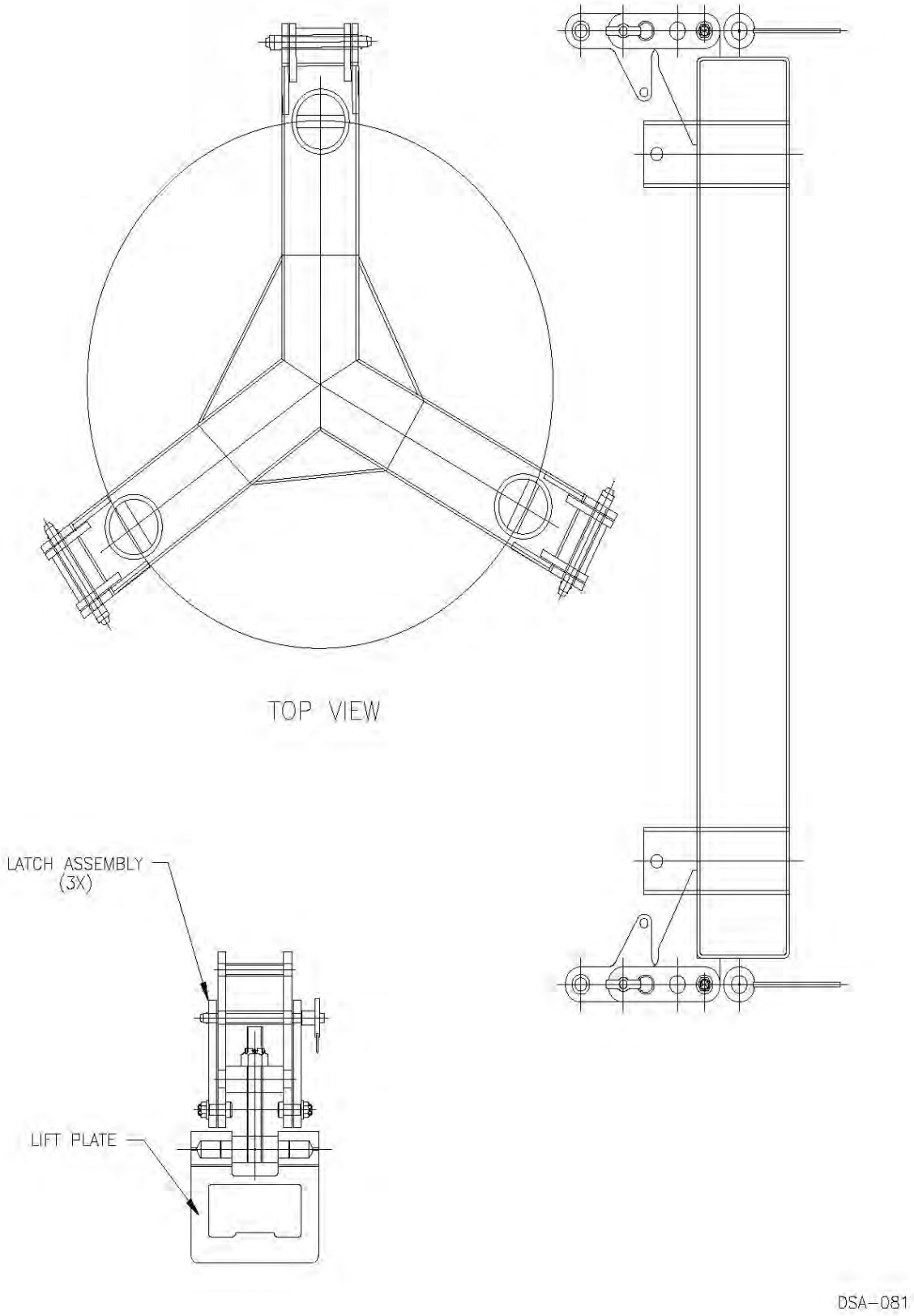

Figure 2.6-21. 10-Drum Overpack Lifting Fixture Adapter

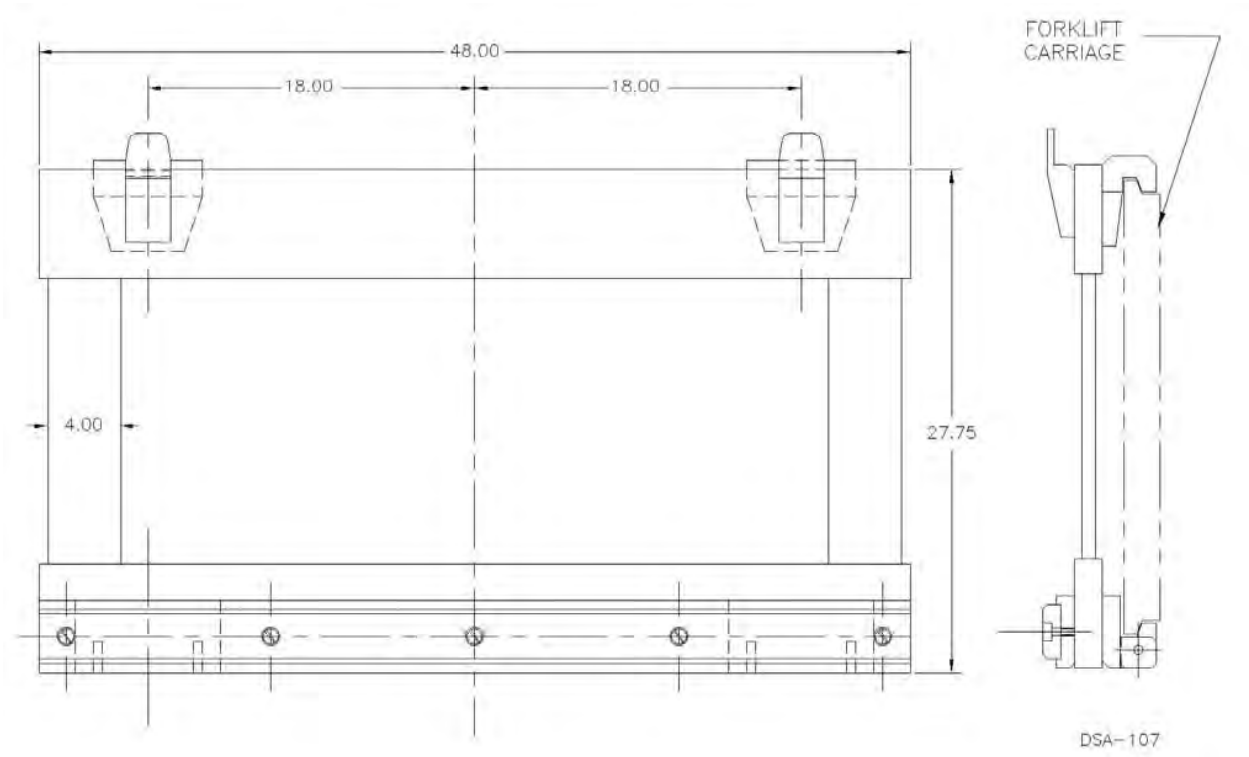

Figure 2.6-22. Standard Waste Box Forklift Fixture

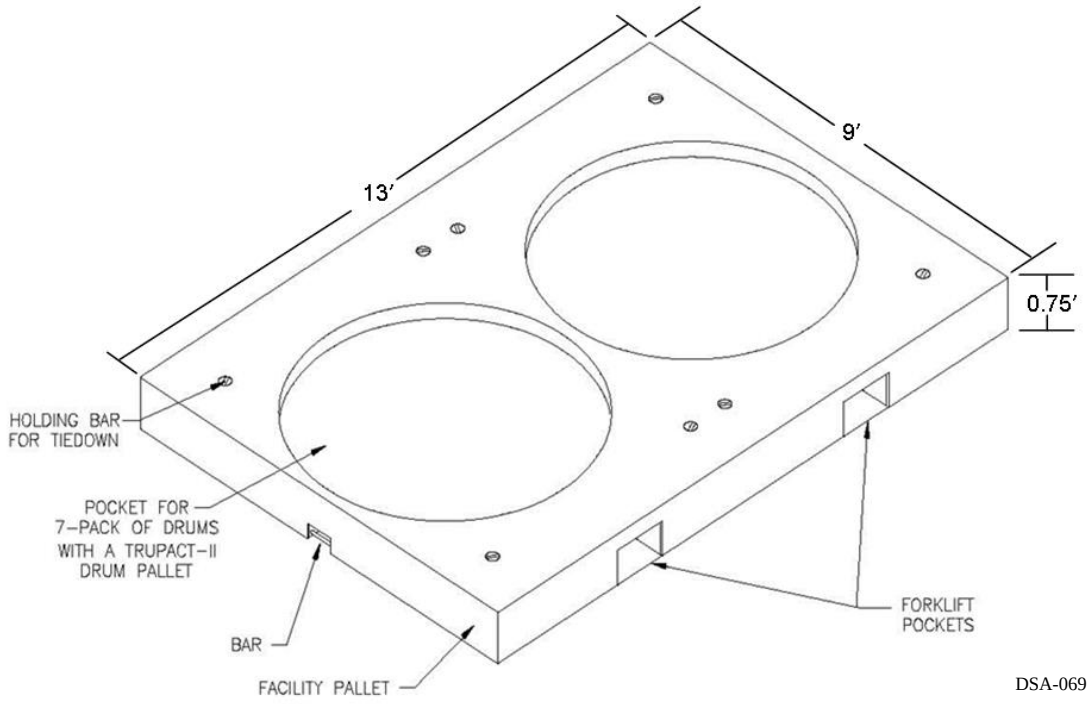

Figure 2.6-23. Facility Pallet

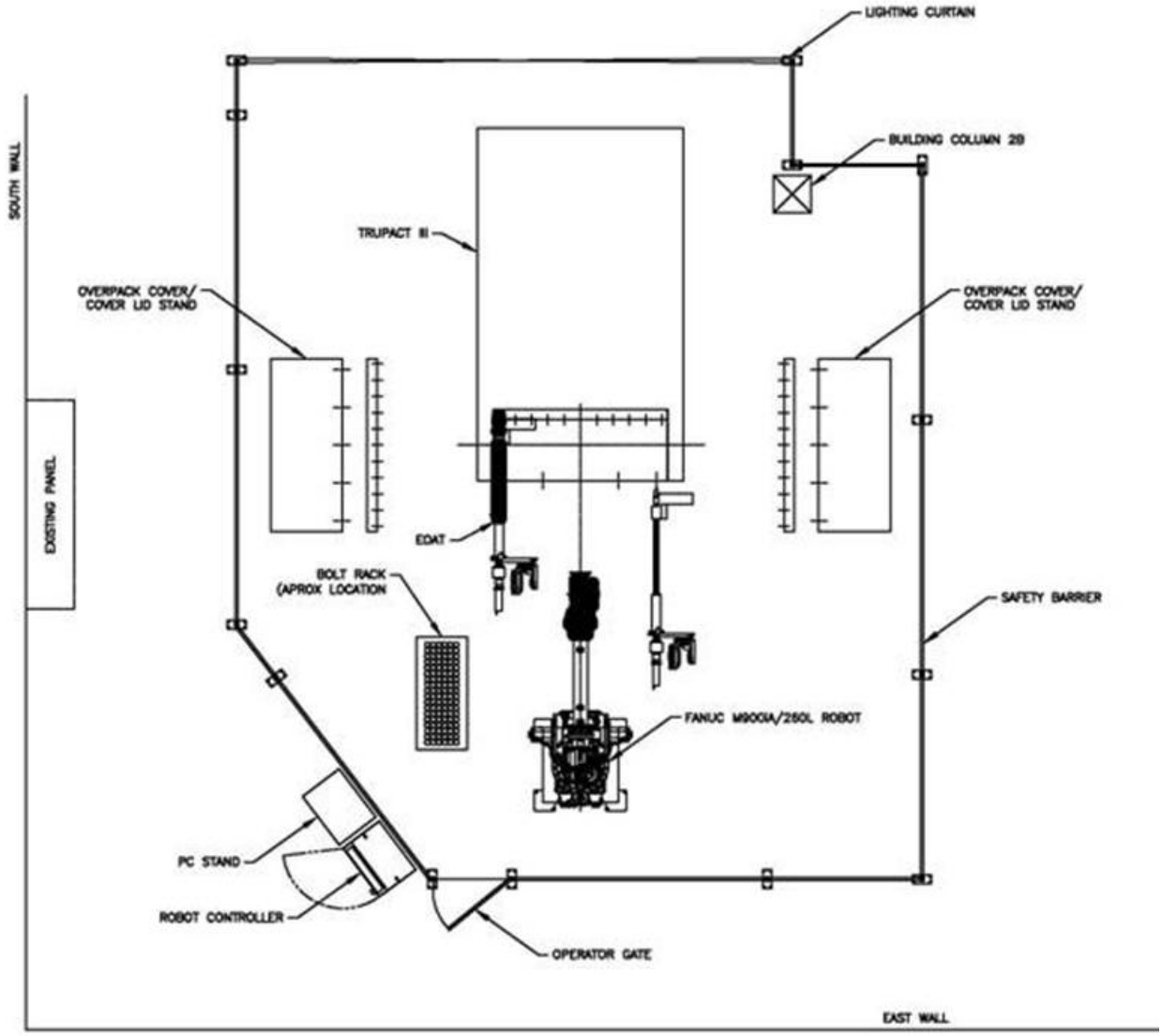

Figure 2.6-24. Bolting Station

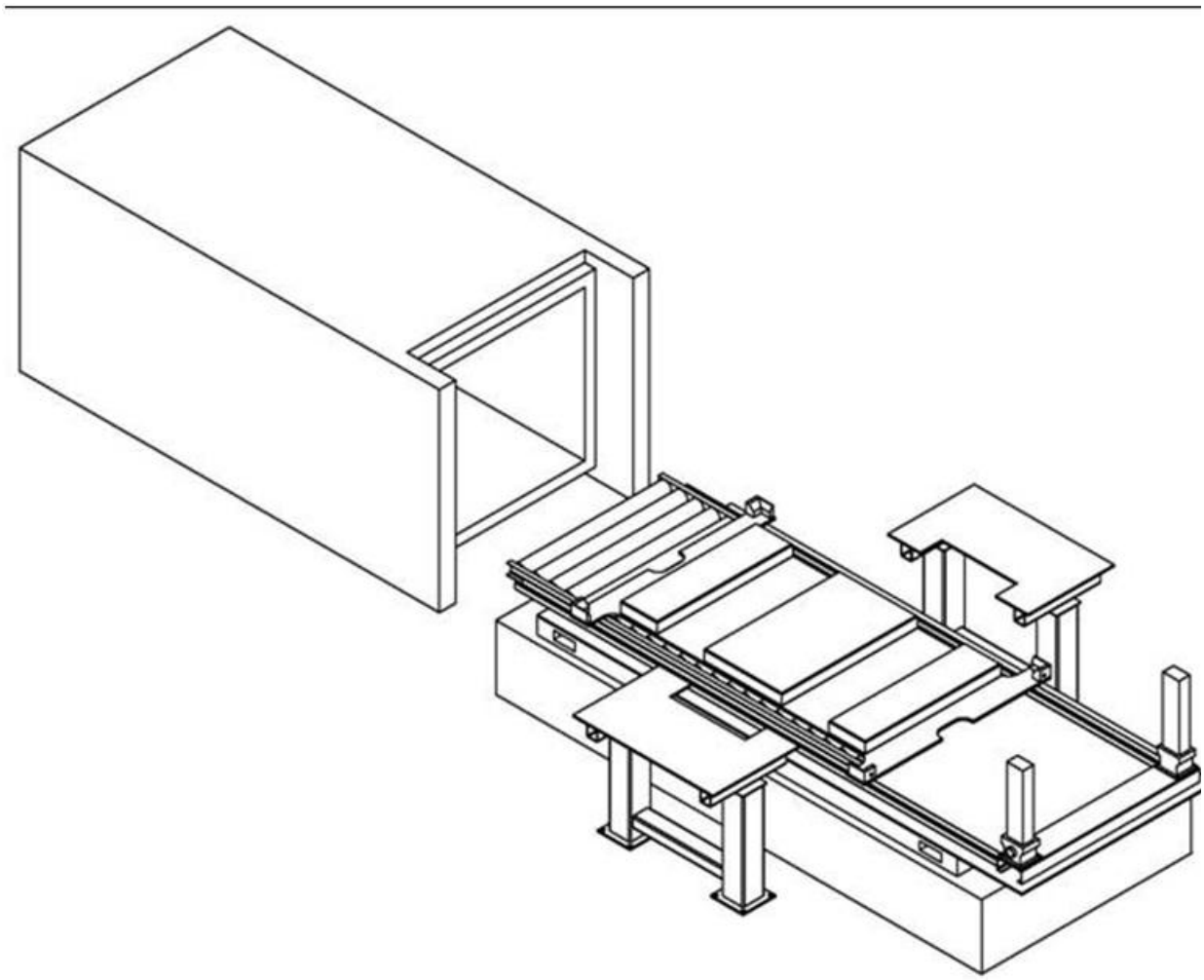

Figure 2.6-25. Payload Transfer Station

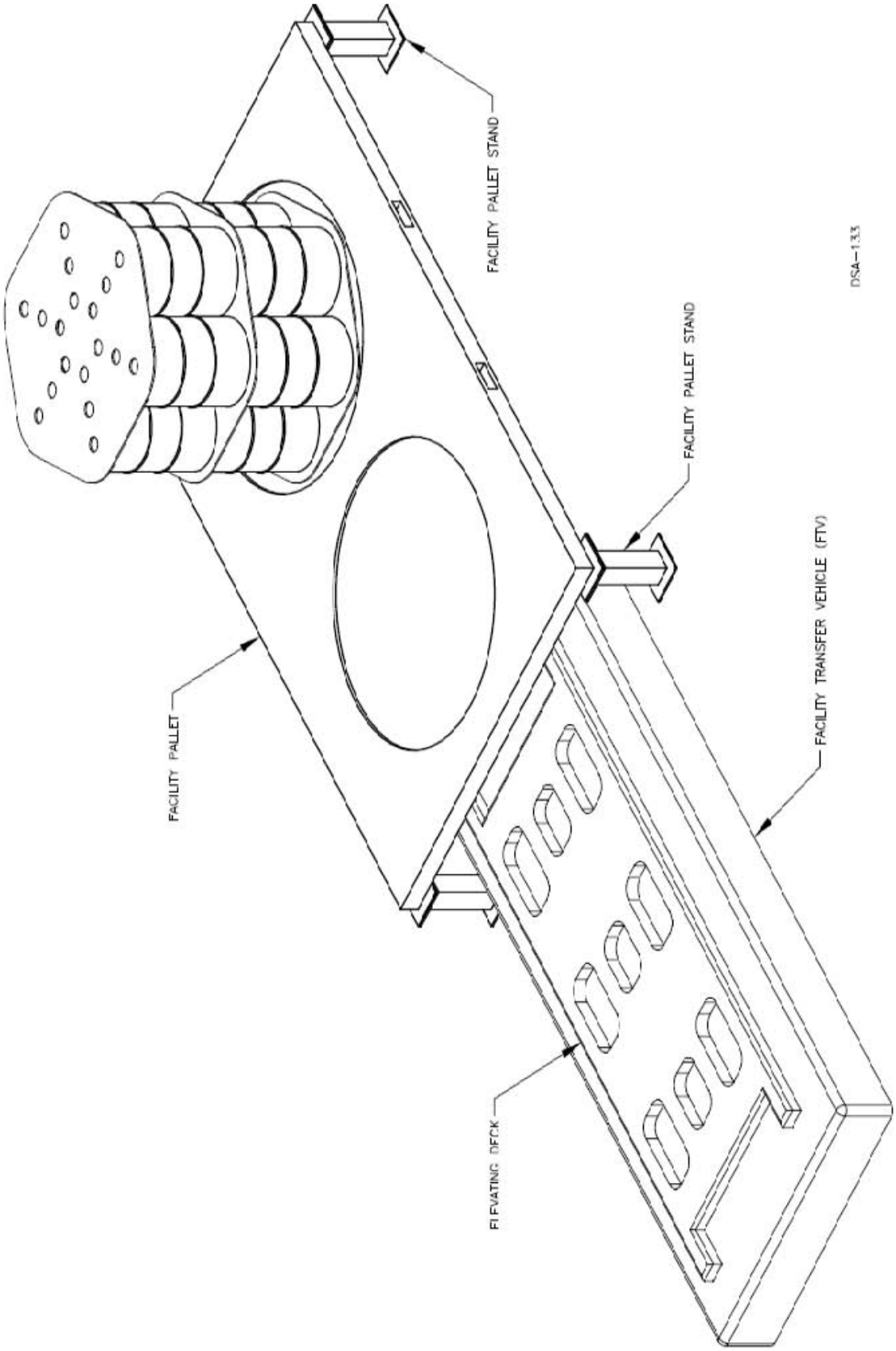

Figure 2.6-26. Facility Pallet on Stand and Facility Transfer Vehicle

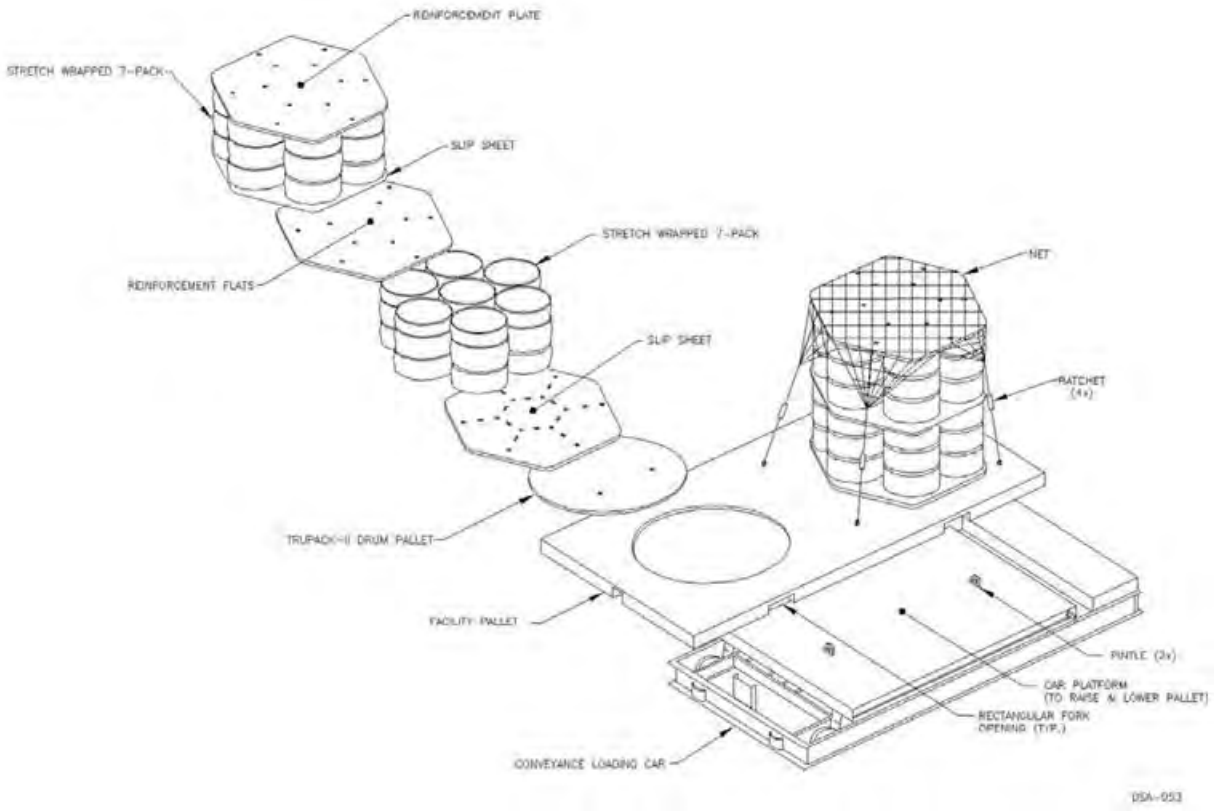

Figure 2.6-27. Facility Pallet on Conveyance Loading Car

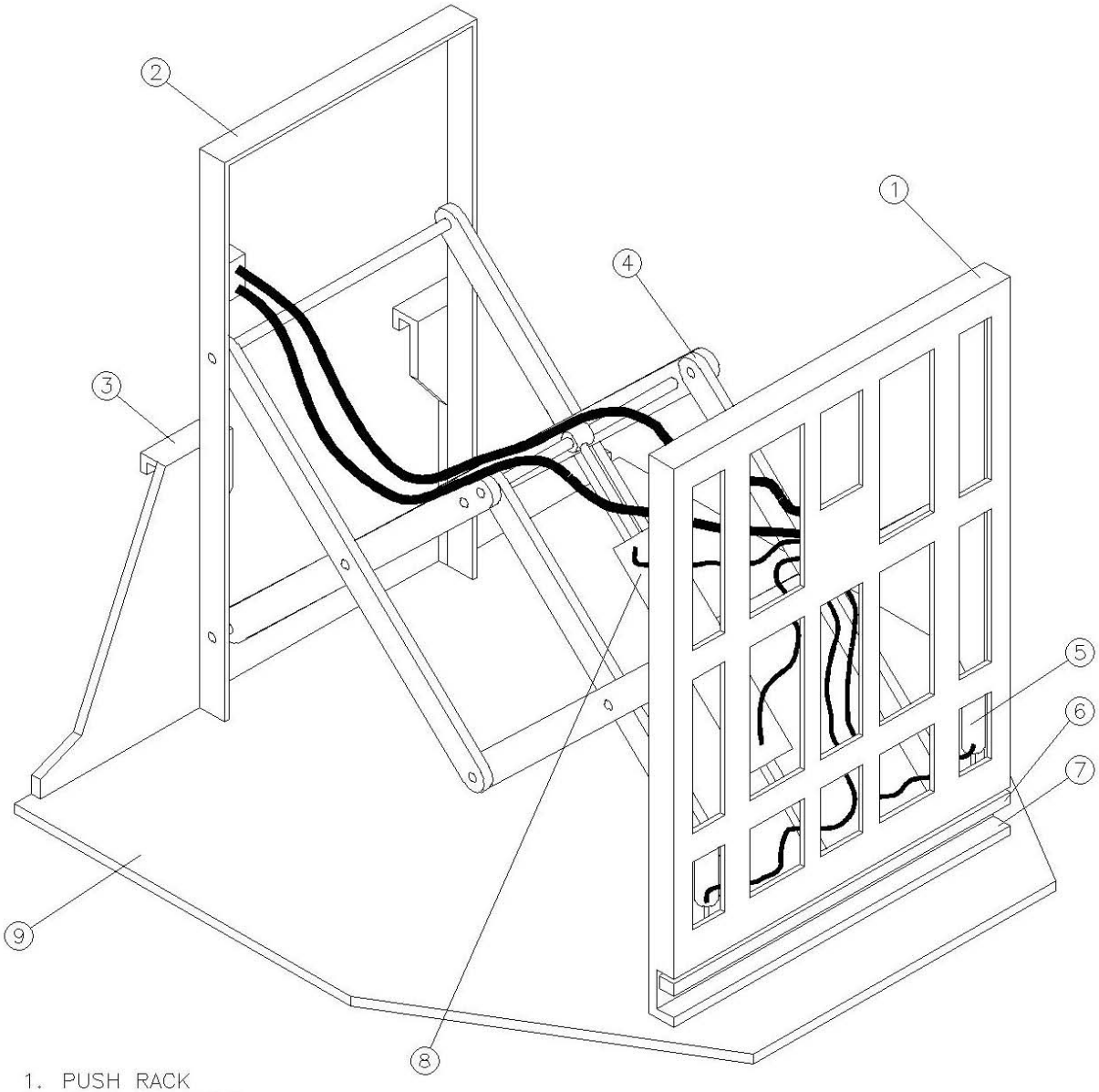

1. PUSH RACK
2. BASE ASSEMBLY
3. UPPER RETAINER
4. LINKAGE ASSEMBLY
5. GRIPPER CYLINDER
6. GRIPPER BAR
7. GRIPPER JAW
8. PUSH CYLINDER
9. PLATEN

DSA–068

Figure 2.6-28. Push/Pull Attachment Requiring Forklift Tine Removal

Figure 2.6-29. Push/Pull Attachment Installed on Forklift Tines

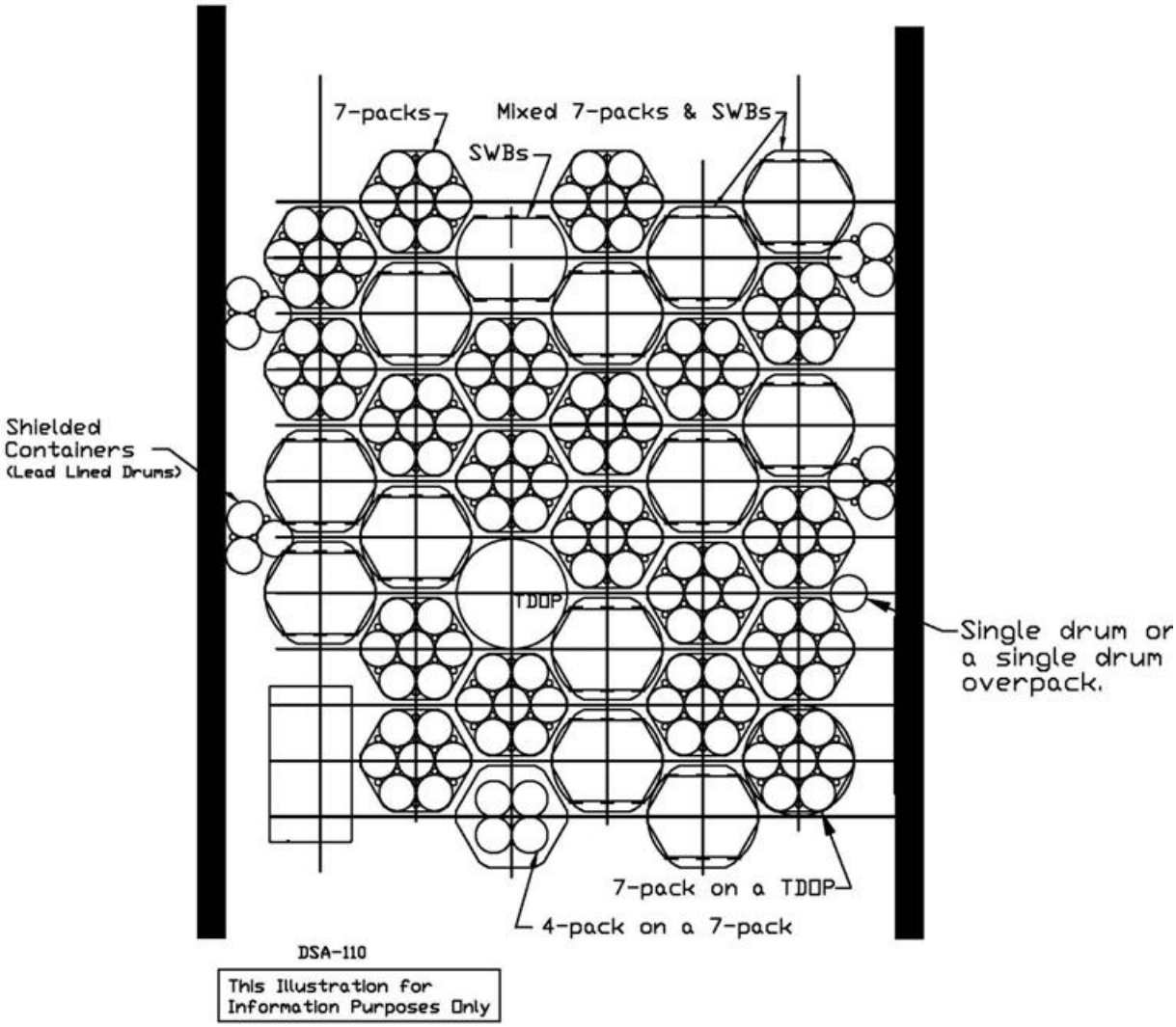

Figure 2.6-30. Arrangement of Typical Waste Stack (Magnesium Oxide not shown)

2.7 CONFINEMENT SYSTEMS

The WIPP confinement systems consist of static and dynamic barriers that prevent or minimize the following:

- The spread of radioactive and non-radioactive HAZMAT in occupied and unoccupied process areas.
- The release of radioactive and non-radioactive HAZMAT in facility effluents during normal operation and process interruptions.
- The release of radioactive and non-radioactive HAZMAT resulting from Design Basis Accidents (DBAs) including severe natural events and man-made events.

Static barriers are structures that confine contamination by their physical presence and dynamic barriers control the airborne radioactive material. Static barriers include Waste Containers, building structures, the UG repository, and HEPA filtration and non-radioactive HAZMAT enclosures. Dynamic barriers consist of the active portion of surface and UG ventilation systems. The primary confinement is the Waste Container and the secondary confinement consists of the WHB and the UG. The WHB is designed to withstand the effects of tornadoes, high winds, and earthquakes. The UG is unaffected by tornadoes and high winds. The WIPP confinement systems meet the requirements of DOE Order 420.1C.

2.7.1 Waste Handling Building

Static and dynamic barriers that ensure confinement are incorporated into the design of the WHB. The WHB is designed to maintain its integrity following a DBT or DBE. The WHB and Hot Cell Complex use airlocks to ensure that contamination or airborne radioactive material is not easily transported from the immediate area.

2.7.2 Underground

The primary confinement for TRU Waste in the UG is the Waste Container itself. Additional confinement includes the UVS, which provides differential pressure control such that air flow is from the non-waste areas to the disposal area.

The UVS exhausts solely through the Exhaust Shaft. Operation of the SVS would use pressure differentials, bulkheads, and air regulators to divide the mine into two exhaust pathways: one uncontaminated and one for the contaminated area (including areas of potential contamination). The exhaust air from the uncontaminated areas of the UG would be directed through upcasting through the Salt Handling Shaft. The exhaust air from the contaminated areas of the UG would then be directed through HEPA filters located on the surface to mitigate any potential radiological releases from the UG. The SVS will be interlocked with differential pressure sensors through software means via CMS programs in the UG. This addresses the issue of flow reversal and minimizes the potential spread of contamination. Bulkheads would separate the different air circuits with the airflow arranged so any air leakage would go from the uncontaminated side to the contaminated side. When the SVS fan would not be in operation, the ventilation flow would revert to exhaust only through the UVS HEPA filters. Airflow during SVS operation is shown in Figures 2.7-10 and 2.7-11.

2.7.3 Ventilation Systems

The WIPP ventilation systems are designed to provide a suitable environment for personnel and equipment during plant operations and to provide radiological control during postulated Waste Handling accidents and process interruptions. Ventilation systems, where appropriate, are used for space heating and cooling. The WIPP ventilation systems are designed to meet the emissions limitations in *Radiation Protection of the Public and the Environment* (DOE Order 458.1, Change 2), using the following guidelines:

- Ventilation airflow is from areas of lower to areas of higher potential for contamination.
- In building areas that have a potential for contamination, a negative air pressure is maintained to minimize the spread of contaminants.
- Consideration is given to the temporary disruption of normal airflow patterns because of maintenance operations by providing dual trains of HEPA filters and exhaust equipment.
- Ventilation systems are designed to reestablish airflow patterns in the event of a temporary disruption. Ducts that carry potentially contaminated air are routed away from occupied areas.
- Systems are designed so that some components can be taken out of service for maintenance while the system continues to operate as designed.

2.7.3.1 Surface Ventilation Systems

There are independent ventilation systems for each of the following areas:

- Waste Hoist Tower.
- CH Waste Handling area.
- RH Bay including the FCLR, HEPA filter gallery, and Upper Hot Cell Operating Gallery.
- RH Hot Cell Complex including Upper Hot Cell and Transfer Cell.
- WHB Mechanical Equipment Room.
- Battery Exhaust, including the TRUDOCKs and TRUPACT-III.
- EFB.
- Central Monitoring Room.

The CH Waste Handling area ventilation system can operate in a once-through and Recirculation Mode. Exhaust air recirculation systems have been installed on the CH Waste Handling (CH Bay and Room 108) and RH Bay ventilation systems. The recirculation systems have dampers located between the HEPA filter exhaust fans and the WHB common exhaust plenum ducted to Station C to allow HEPA-filtered, conditioned air to be recirculated into the ventilation system supply intake. The recirculation system can be controlled manually from the CMR. The CMR operator will manually convert to a once-through system on receipt of an alarm from a CAM. The ventilation systems maintain pressure differentials that control potentially contaminated air between building interior zones and the outside environment. The WHB ventilation systems continuously filter the exhaust air from Waste Handling areas to reduce the potential for release of radioactive effluents to the environment.

Airlocks for ventilation differential pressure control are electrically interlocked such that only one door at a time can be open and are provided in the following locations:

- At entrances to potentially contaminated areas to maintain a static barrier.
- Between areas of large pressure differences to provide a pressure transition and to eliminate high air velocity.
- Between areas where pressure differentials must be maintained.
- To minimize air movement from the WHB to the Waste Shaft.

The ventilation systems include instrumentation to the following operating parameters:

- Pressure drop across each prefilter and HEPA filter bank.
- Airflow rates at selected points.
- Pressure differentials surrounding areas of high potential for contamination levels.

The operation of the supply and exhaust fans for the WHB is controlled to maintain differential pressures between rooms. The WHB exhaust fans and controls can be supplied by backup power in the event that normal power is interrupted.

2.7.3.2 Waste Handling Building Contact-Handled and Remote-Handled Waste Handling Area Ventilation Systems

The CH WH CVS and RH Bay ventilation are separate independent ventilation systems shown on schematic flow diagrams (Figure 2.7-1 through Figure 2.7-4). The figures show that the ventilation airflow is from areas of lower to areas of higher potential for contamination (e.g., the CH Bay and Room 108 are more negative than the rest of the CH portion of the WHB; the upper Hot Cell is more negative than the Transfer Cell, that is more negative than the rest of the RH portion of the WHB). The Hot Cell Complex has a separate CVS with its HEPA filters in the HEPA filter room across from the north wall of the RH portion of the WHB. The ventilation systems for each WHB subsystem supply air to the rooms of the areas served. Each supply air-handling unit consists of filters, cooling coils, heating elements, fans with associated ductwork, and controls to condition the supply air, maintaining the design temperature during winter and summer. Fan operating status, filter bank pressure drops, and static pressure differentials are monitored in the CMR. Excess filter pressure drop and loss of flow initiates an alarm in the CMR. The CVS consists of prefilters and HEPA filters sized in accordance with design airflows, using industry standards for maximum efficiency, and exhaust fans that pull ventilation air through the HEPA filters before exhausting out the WHB exhaust vent.

Each ventilation system’s supply fan and exhaust fan are designed to maintain building pressure negative with respect to atmospheric pressure and maintain the design airflow pattern. During normal operation, if the operating exhaust/supply fan fails, the corresponding supply/exhaust fan is stopped. The standby system starts automatically or can be started manually.

The internal cavity of each RH shipping container is vented into a vacuum system that collects any airborne particulate contamination on a swipe medium. The sample system exhausts headspace gas and potential airborne particulate contamination through a HEPA filter before exhausting air into the RH Bay ventilation system.

The Station C effluent sampling system continuously samples the air discharged from the WHB exhaust vent downstream of HEPA filtration.

Tornado dampers, constructed to withstand a DBE and DBT, are installed in all HVAC inlets and exhaust openings in the WHB. Dampers installed in the air intakes open in the same direction as the normal airflow and close automatically to prevent a reversal of flow. Dampers in exhaust air openings open against the direction of normal airflow and are held open by springs. When tornado pressure on the open damper blades overcomes the spring tension, the blades close. In the event of a tornado, the WHB tornado dampers will automatically close to prevent the outward rush of air caused by a rapid drop in atmospheric pressure mitigating damage to HEPA filters from a potential high differential pressure. The WHB tornado dampers are also designed to close in the event of a DBE. A damper closure automatically stops the WHB ventilation exhaust fans.

In case of an offsite power failure, exhaust fans can be switched to the backup power system to continue to exhaust air in the designed flow pattern as noted in Section 2.9.1.2.

Instrumentation is provided that enables the operator to monitor equipment from the CMR. The monitored parameters include fan operating status, filter bank differential pressure, and static pressure differential in areas of the WHB. Filter differential pressure is displayed in the CMR. An alarm for a pressure drop, indicating filter replacement is needed, actuates at a predetermined differential pressure across the HEPA filters.

Instruments and system components are subject to periodic testing and inspection during normal plant operation.

All nuclear-grade HEPA filter banks are tested for conformance with *Testing of Nuclear Air-Treatment Systems* (ANSI/ASME N510) and have greater than or equal to 99 percent removal efficiency (SDD HV00, *Heating, Ventilation and Air Conditioning System System Design Description (SDD)*).

2.7.3.3 Waste Handling Building Mechanical Equipment Room Ventilation System

The Mechanical Equipment Room is maintained at a pressure slightly below atmospheric to minimize leakage of room air, which may contain airborne radioactive contaminants. Negative pressure is maintained by the same exhaust fan systems that exhaust air from the CH Waste Handling areas.

2.7.3.4 Waste Handling Building Waste Shaft/Waste Hoist Tower Ventilation System

The ventilation system provides filtration of supply air, unit heaters for freeze protection, and a unit cooler to provide cooling of equipment in summer. Exhaust airflow is down through the tower and into the Waste Shaft, where it combines with incoming air from the Waste Shaft auxiliary air intake tunnel as shown in Figure 2.7-4.

A pressurization system serves the airlock to the Crane Maintenance Room and pressurizes the airlock, preventing the release of potentially contaminated air from the Crane Maintenance Room to the access corridor.

2.7.3.5 Battery Exhaust System

The Battery Exhaust System provides ventilation for the WHB Battery Charging Area and for HEPA filtration of exhaust from; the TRUDOCK vent hoods (Figure 2.6-18), TRUDOCK vacuum system (Figure 2.6-19), and the TRUPACT-III exhaust hood. The Battery Exhaust System exhaust combines

with exhaust from other WHB ventilation systems before the Station C effluent sampling system, prior to exhaust to the environment. The Battery Exhaust System is interlocked with the TRUDOCK Exhaust System and the TRUPACT-III exhaust fan such that the TRUDOCK and TRUPACT-III exhaust fans will not operate if the battery exhaust system is not operating.

2.7.3.6 Exhaust Filter Building Ventilation System

A schematic flow diagram of the EFB ventilation system is shown in Figure 2.7-5. The EFB supports the operation of the UVS and contains the UVS HEPA filters. The function of the ventilation system in the EFB, major components, operating characteristics, safety considerations, and controls are similar to those of the CH WH CVS in the WHB. Each supply air-handling unit in the EFB consists of prefilters, an electric heating coil, and a fan to condition the air as required to maintain the design temperature. The EFB ventilation system exhausts air from all potentially contaminated areas of the building through two filter housings, each containing a bank of prefilters and two stages of HEPA filters, and two exhaust fans before discharging to the atmosphere. The EFB exhaust air is discharged into the discharge duct of the 860 fans so that it can be monitored for airborne radioactive contaminants.

2.7.3.7 Central Monitoring Room Ventilation System

The CMR is located in the Support Building. The CMR ventilation system provides a suitable environment for personnel occupancy under normal operations and HEPA filtration operation and maintains a slightly positive pressure in the CMR. The CMR has features to allow its use during both normal and emergency conditions, including two-hour fire walls, redundant ventilation systems, supply and exhaust systems capable of being connected to the backup electrical power system, and a manual shift to HEPA filtration of intake air. Major components of the CMR HVAC system include supply air-handling units that condition (heat/cool) the air, HEPA filters, and exhaust fans.

The CMR is served by two 100 percent capacity air-handling units. One is in service and one is in standby status. The standby unit will automatically start in the event the operating unit fails. The schematic airflow diagram for the CMR HVAC system is shown in Figure 2.7-6.

2.7.3.8 Underground Ventilation System

The UVS serves the WIPP UG to provide acceptable working conditions and a life-sustaining environment during normal operations and off-normal events, including Waste Handling accidents. In the event of a breach of Waste Containers, the UVS assists in the confinement of released material. The UVS is designed, maintained, and operated (Figure 2.7-7 and Figure 2.7-8) to meet or exceed the criteria specified by 30 CFR 57, the New Mexico Mine Safety Code for All Mines, Including Open-Cut and Open-Pit (19.6.5 NMAC), and applicable parts of DOE Order 420.1C and DOE-HDBK-1169, *Nuclear Air Cleaning Handbook*.

The UVS is composed of: three centrifugal exhaust fans (700 fans), each capable of providing 260,000 acfm and any pair of 700 Fans capable of providing 425,000 acfm; three centrifugal exhaust fans (860 Fans), each capable of approximately 60,000 acfm; two identical HEPA filter assemblies arranged in parallel in the EFB; two skid mounted centrifugal exhaust 960 fans, each capable of providing 27,000 acfm; two interim skid mounted filter assemblies; a skid-mounted vane axial 1060 fan; filter bypasses; isolation and backdraft dampers; and associated ductwork.

UG ventilation is divided into four separate flow paths supporting the waste disposal area, the construction area, the north area, and the Waste Shaft Station. The waste disposal, construction, and north areas receive their air supply from the Air Intake Shaft and the Salt Handling Shaft. Use of the SVS will

alter this flow pattern as described in Section 2.7.3.8.3. The Waste Shaft Station receives its air supply from the Waste Shaft via the Waste Hoist Tower and the Auxiliary Air Intake Tunnel. Airlocks and bulkheads separate the different circuits. The four air circuits combine near the Exhaust Shaft, which is the common discharge from the UG.

Filtration Mode mitigates the consequences of a UG accident involving waste by reducing the airflow rate and directing the UG exhaust through at least two of four HEPA filter assemblies located on the surface. Since the 2014 events, the UVS now operates and will remain operating in the Filtration Mode.

The operating status of each exhaust fan is displayed in the CMR. Instruments and system components are accessible for periodic testing and inspection during normal plant operation. Under normal operating conditions, the ventilation system functions continuously.

The bulkheads, overcasts, airlocks, and ventilation regulators in bulkheads used to segregate the UG ventilation circuits are made of noncombustible material, except for flexible flashing used to accommodate salt movement and in accordance with 30 CFR 57. Figure 2.7-9 shows a typical bulkhead with an airflow regulator installed.

Air is directed to active Disposal Rooms in a panel using bulkheads and air regulators. After a Disposal Room is filled, it is closed against entry and isolated from the mine ventilation system.

2.7.3.8.1 Underground Ventilation Filtration System

The Underground Ventilation Filtration System (UVFS) is the filtration system in use prior to the 2014 events. It is composed of: three centrifugal exhaust fans (860 fans), each capable of approximately 60,000 acfm; two identical HEPA filter assemblies arranged in parallel; isolation and backdraft dampers; and associated ductwork. The 860 fans are located on the surface near the Exhaust Shaft adjacent to the EFB on the east side of the building. During filtration operations, only one 860 fan operates, while the 700 fans do not operate.

Since the February 14, 2014 event the 700 fans have been taken out of operation. Two of the 700 fans are locked out and one of the 700 fans has been disconnected from the UVS ductwork. Additionally, the associated filter bypass has been sealed with foam. The UVS permanent Operational Mode is now three operational 860 fans pulling (one fan operating at a time) through two identical HEPA filter assemblies arranged in parallel. Two 700 fans can provide an unfiltered flow path, but this mode of operation is not evaluated or authorized by this DSA revision and, as noted above, the 700 fans have been taken out of service.

UG operations are limited depending on the quantity of air available. In particular, construction and emplacement can no longer take place simultaneously. All three 860 fans, one operating at a time, could be connected to the backup power supply in the event that normal power is lost. Changeover to backup power is manual.

2.7.3.8.2 Interim Ventilation System

The IVS consists of two skid mounted centrifugal exhaust 960 fans; two skid mounted filter housings; isolation dampers; and associated ductwork. The 960 fans can each provide a filtered flow of 27,000 acfm (or 54,000 acfm combined). The 960 fans are located on the surface near the 700 fans and the Exhaust Shaft.

The IVS receives Exhaust Shaft flow through a connection to the ductwork which previously supplied a 700 fan and exhaust into the existing monitored discharge. Figure 2.4-13 shows the IVS layout. The function of the IVS is to increase the filtered flow through the Exhaust Shaft during normal operation, acting as secondary fans to the 860 fans. During filtration operations typically one of three 860 fans in the EFB operates with at least one of two of the IVS fans, while the 700 fans do not operate. The 960 fans cannot be operated on backup power.

2.7.3.8.3 Supplemental Ventilation System

The SVS equipment is onsite but its use is not yet authorized. The SVS would, when authorized, provide additional ventilation airflow to the UG and minimize the deposition of salt on the filter assemblies during construction activities. The SVS will consist of one skid-mounted vane axial 1060 fan (including flow element, direct driven fan, and fan driver on a common skid), located in the UG in the S-90 Drift near the Air Intake Shaft. The fan assembly will include a fan, variable frequency drive, and instrumentation and controls. The skid system (including the fan train of silencers, inlet/outlet bells, regulator, etc.) is installed directly onto the salt floor of the S-90 Drift. The 1060 fan can deliver approximately 130,000 acfm.

The mine infrastructure changes supporting the SVS includes installation of new bulkheads, installation of new equipment/instrumentation and configuration of flow paths.

Operation of the SVS would revise the ventilation flow paths such that the construction and north circuits will receive their supply airflow from the Air Intake Shaft. Uncontaminated air will be discharged through the Salt Shaft, while potentially contaminated air will be directed through the Exhaust Shaft.

The SVS would be interlocked with differential pressure sensors in the UG. This will address the issue of flow reversal and minimize the spread of contamination.

Figures 2.7-10 and 2.7-11 show the flow paths and schematics for SVS operation.

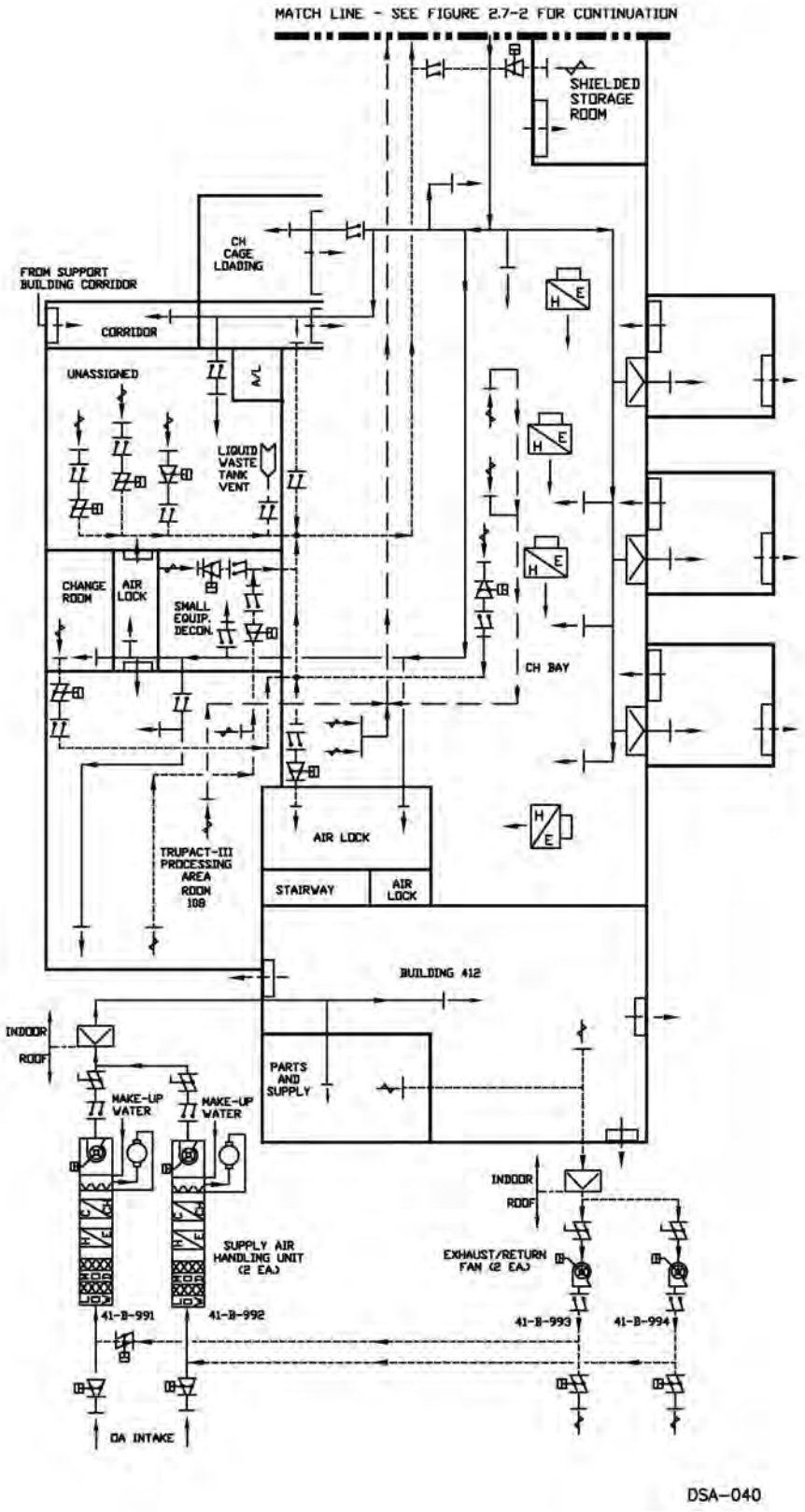

Figure 2.7-1. Waste Handling Building and TRUPACT Maintenance Facility

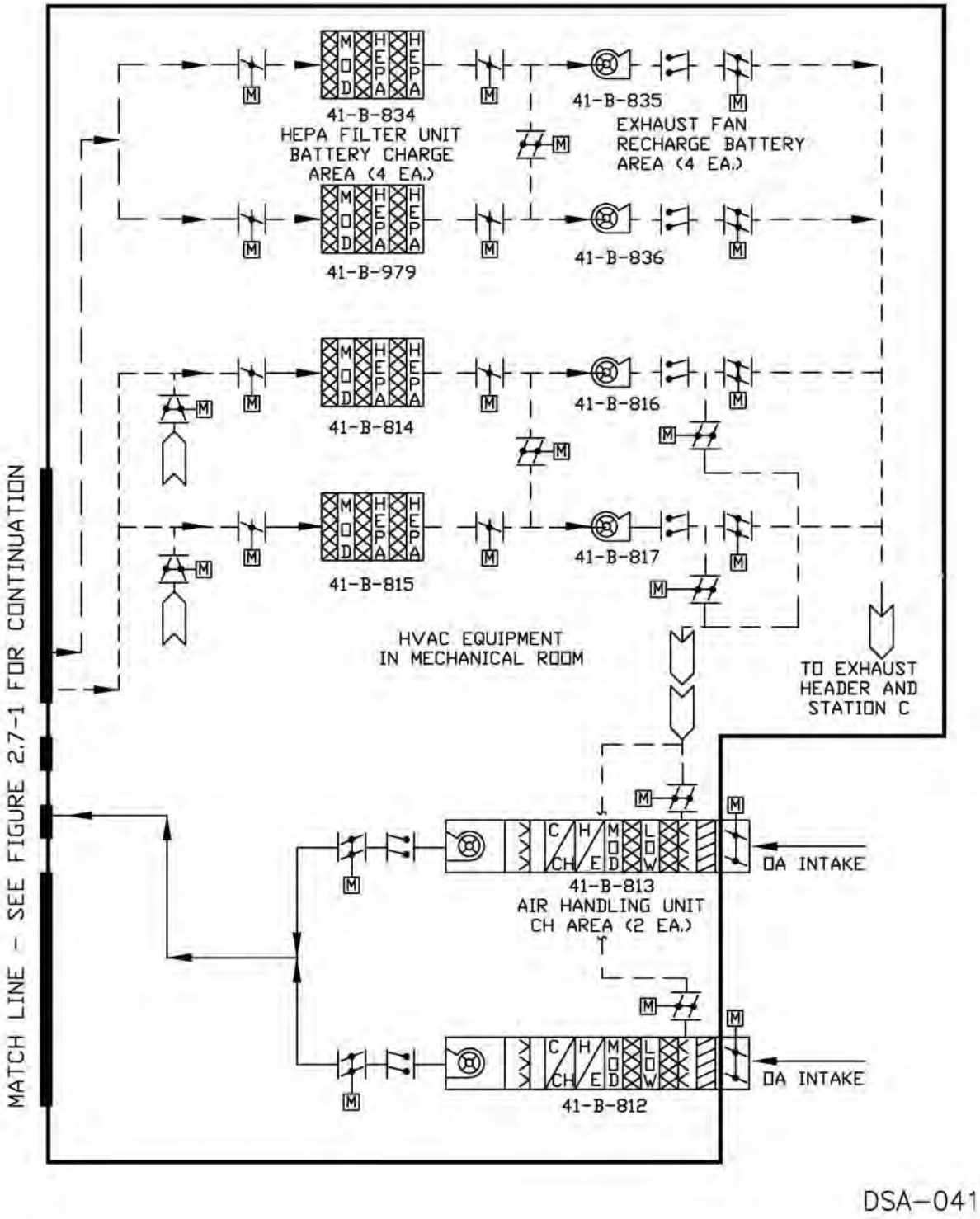

Figure 2.7-2. Waste Handling Building Contact-Handled HVAC Flow Diagram

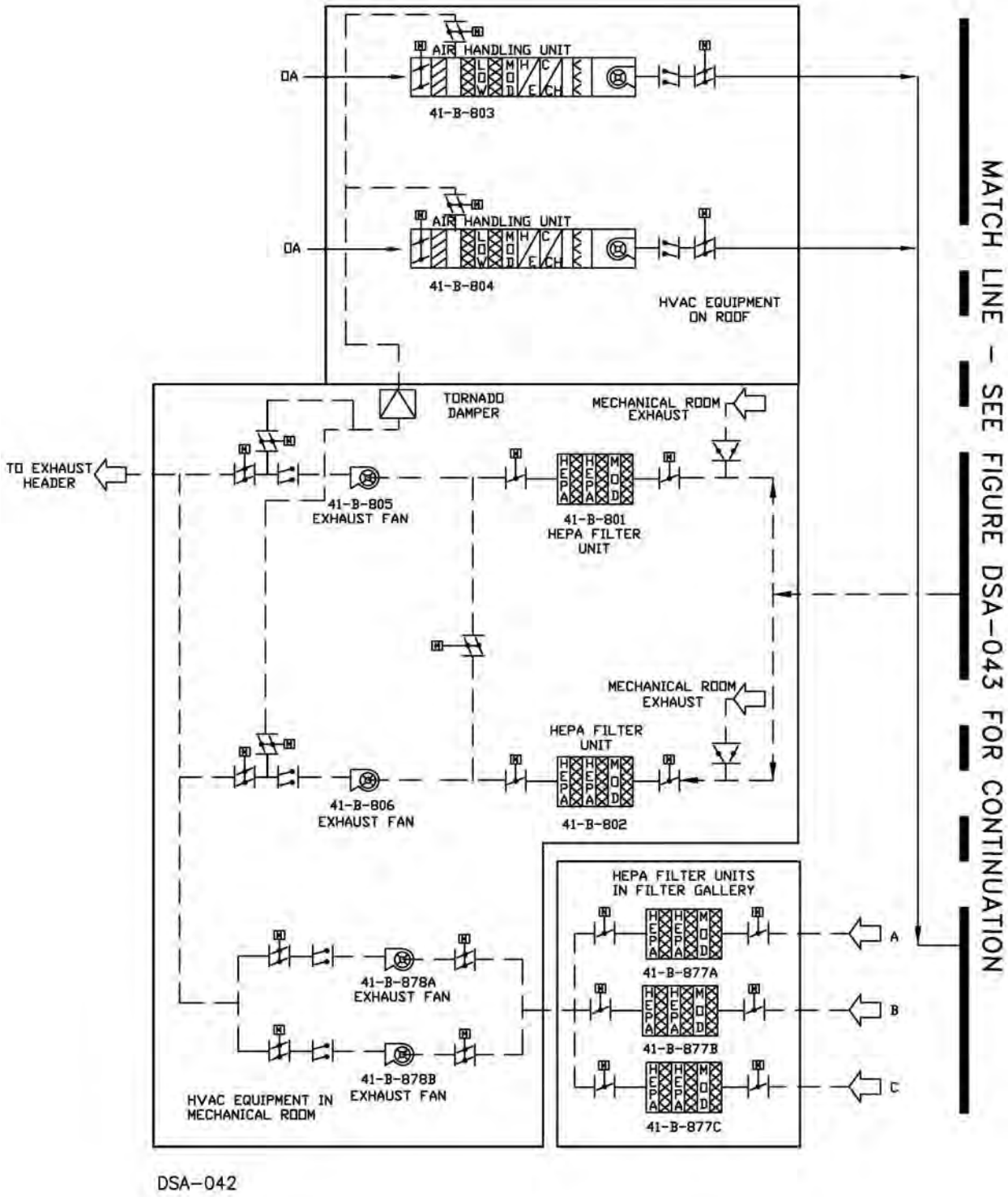

Figure 2.7-3. Waste Handling Building Remote-Handled HVAC Flow Diagram

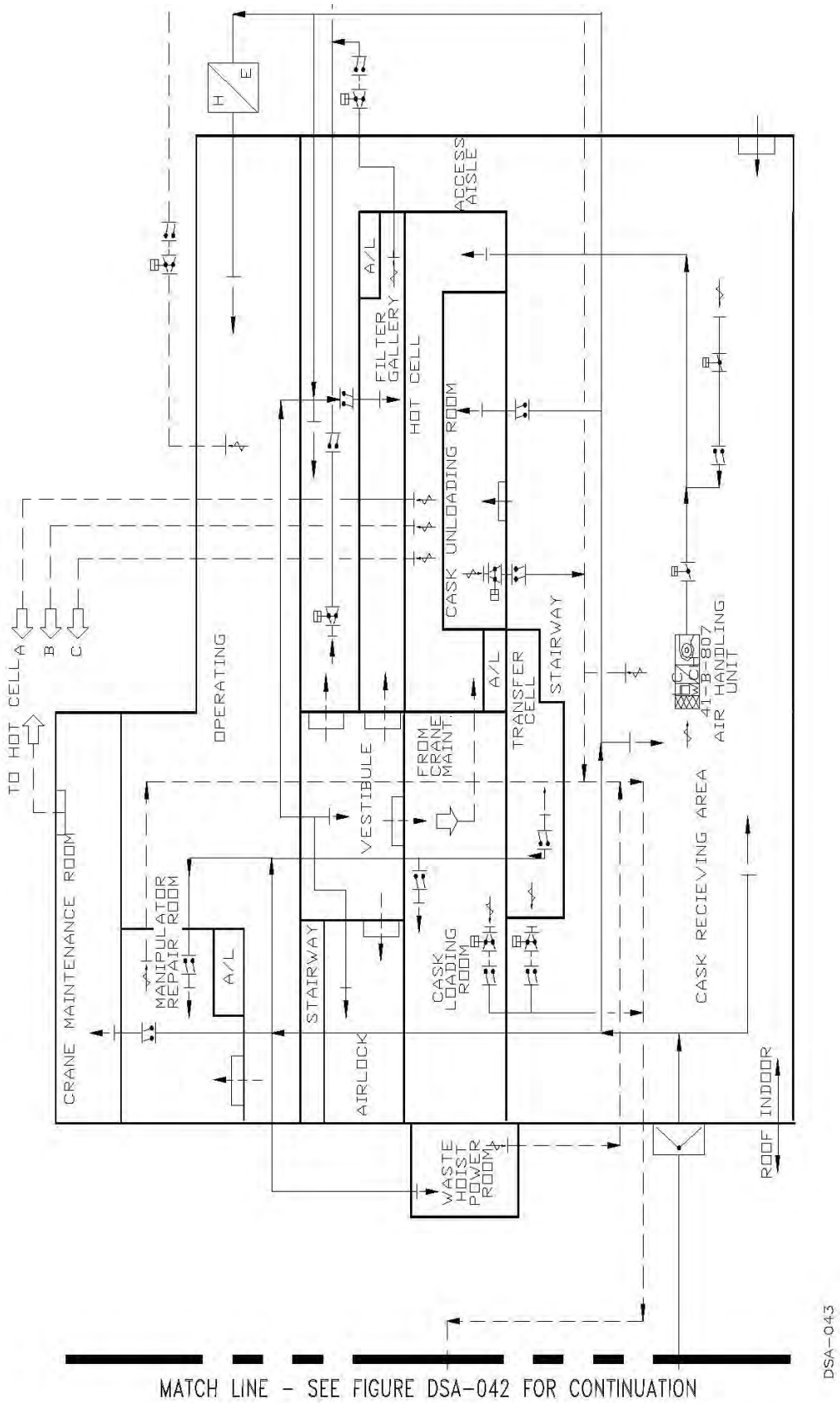

Figure 2.7-3. Waste Handling Building Remote-Handled HVAC Flow Diagram (continued)

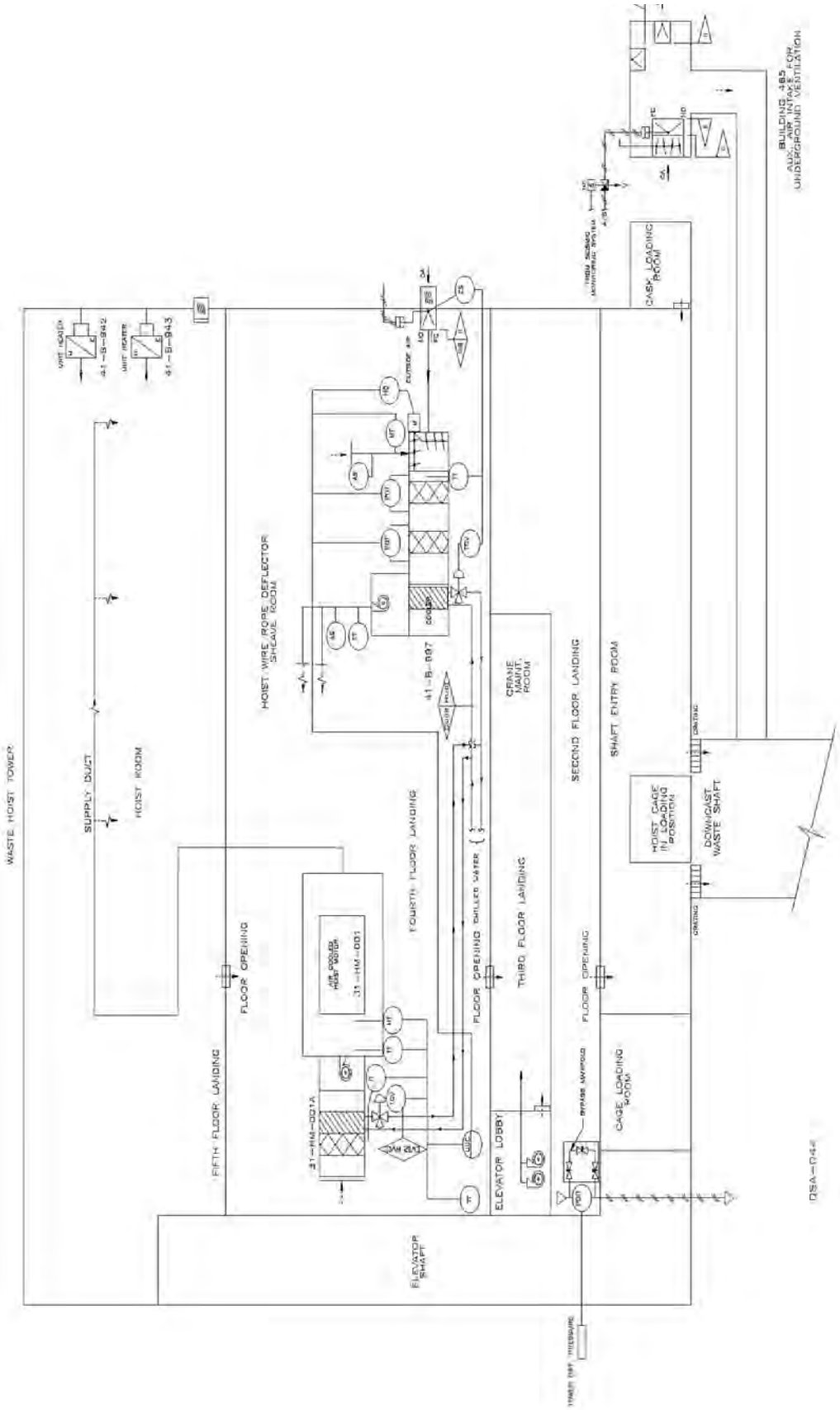

Figure 2.7-4. Waste Shaft / Waste Hoist Tower HVAC Flow Diagram

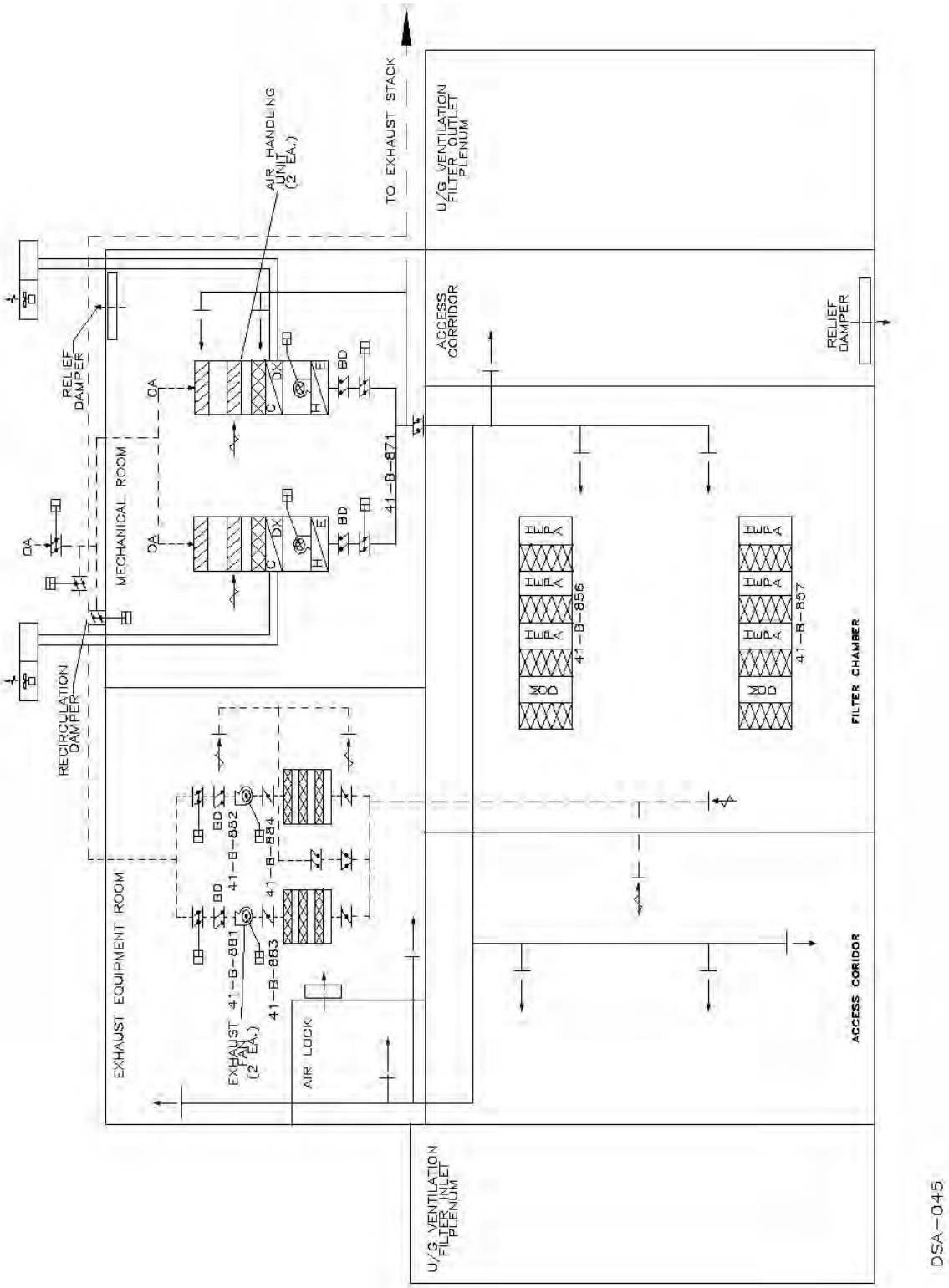

Figure 2.7-5. Exhaust Filter Building Heating, Ventilation, and Air Conditioning Flow Diagram

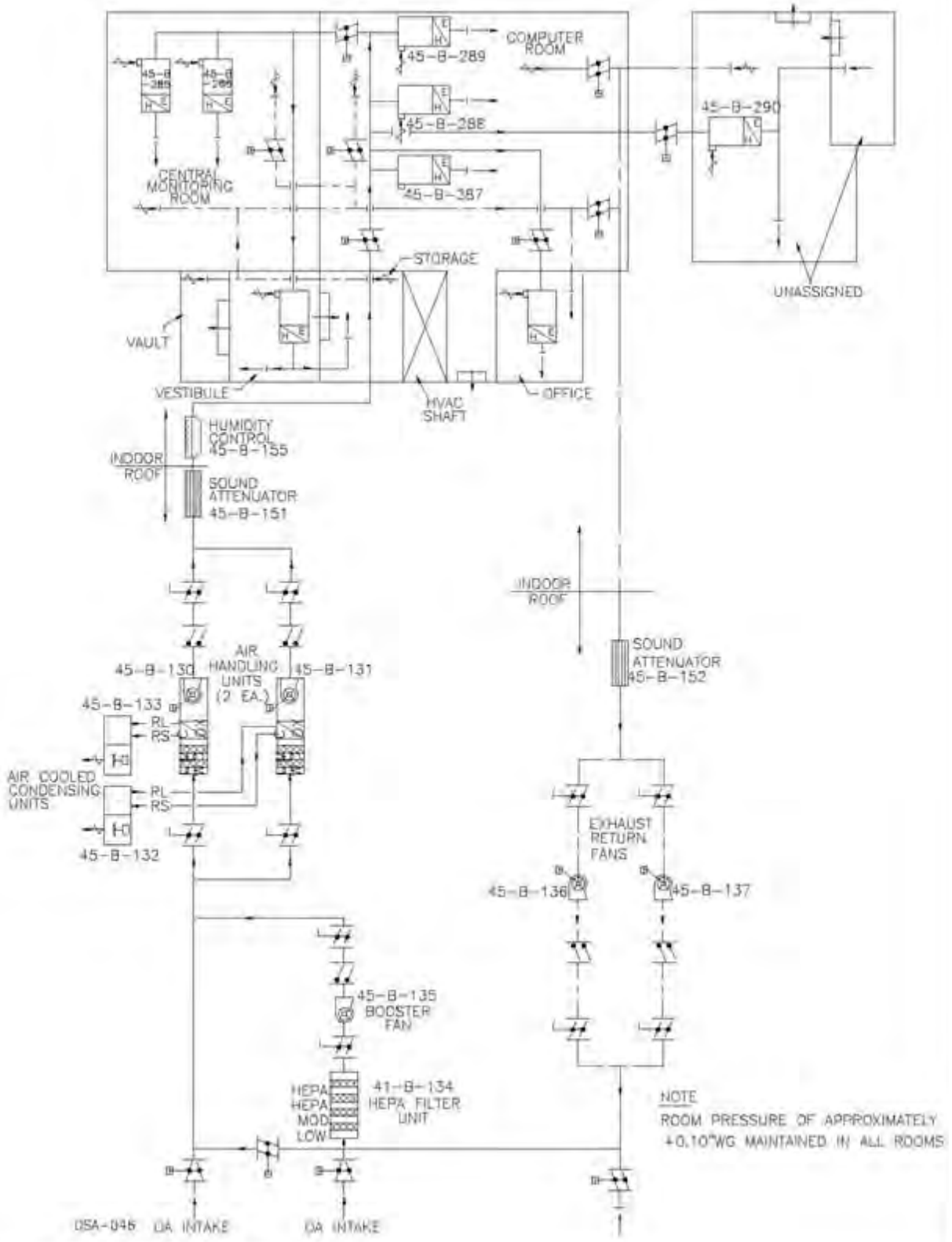

Figure 2.7-6. Support Building Central Monitoring Room HVAC Flow Diagram

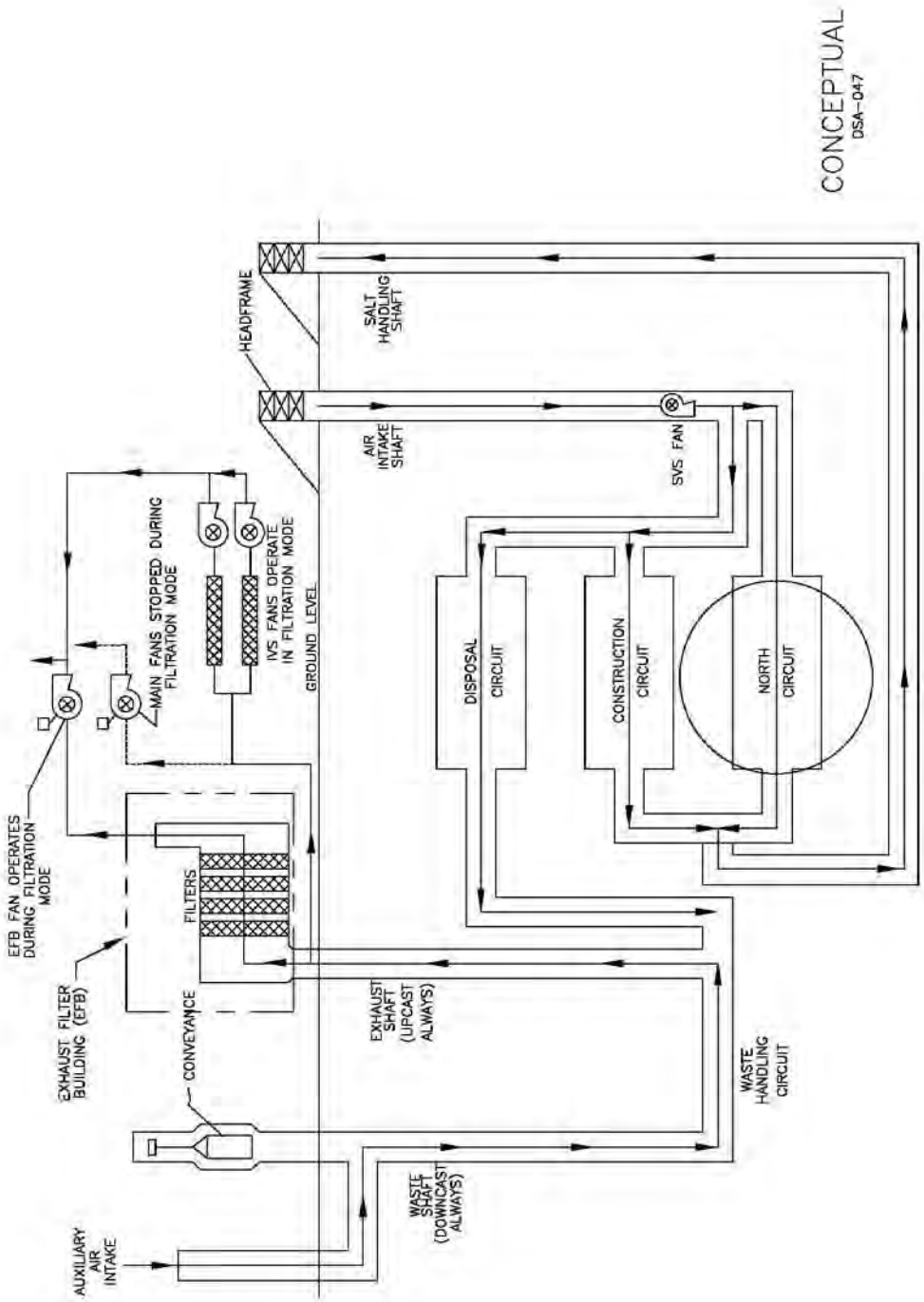

Figure 2.7-7. Underground Ventilation Airflow Diagram

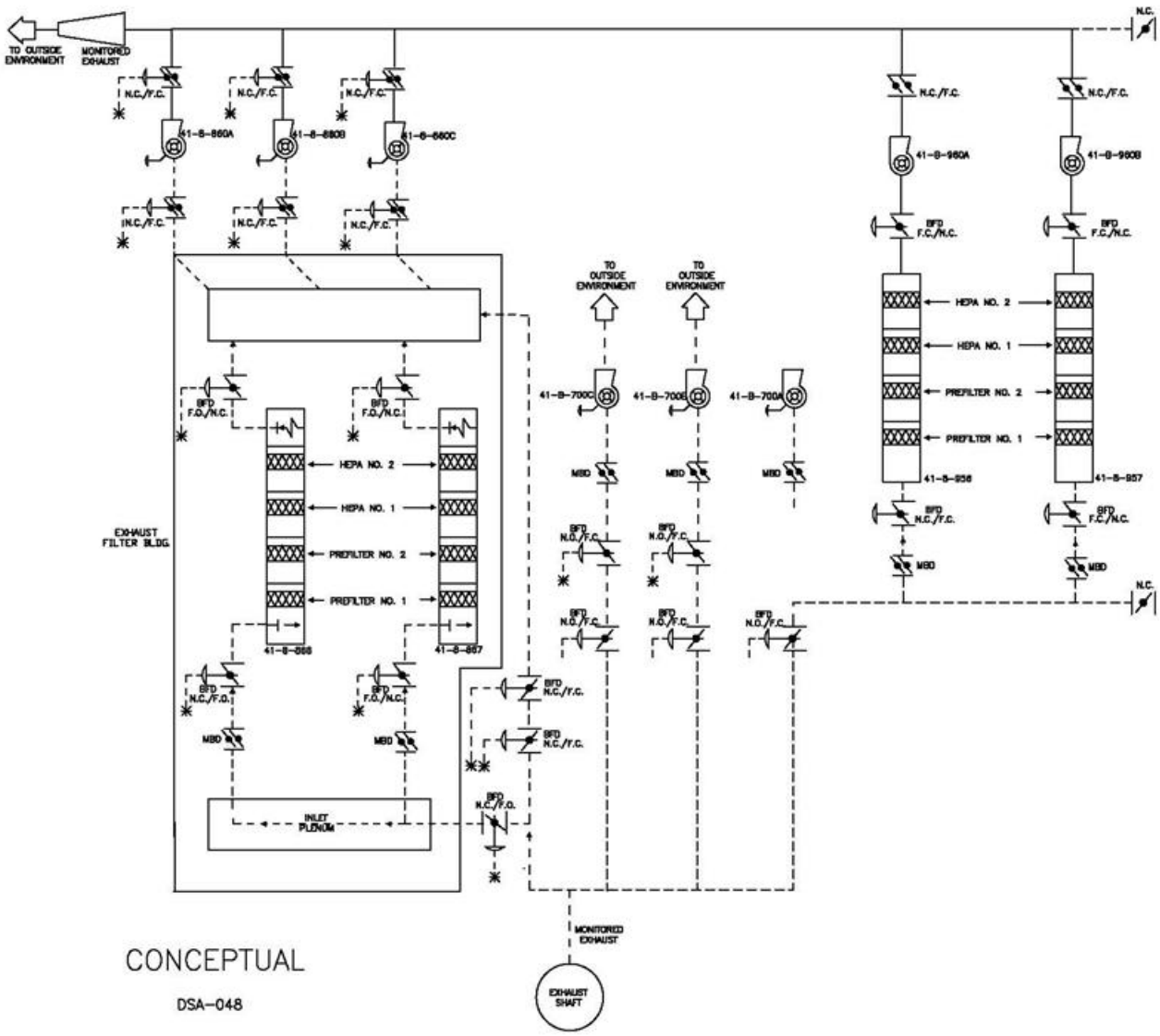

Figure 2.7-8. Main Fan and Exhaust Filter System Schematic

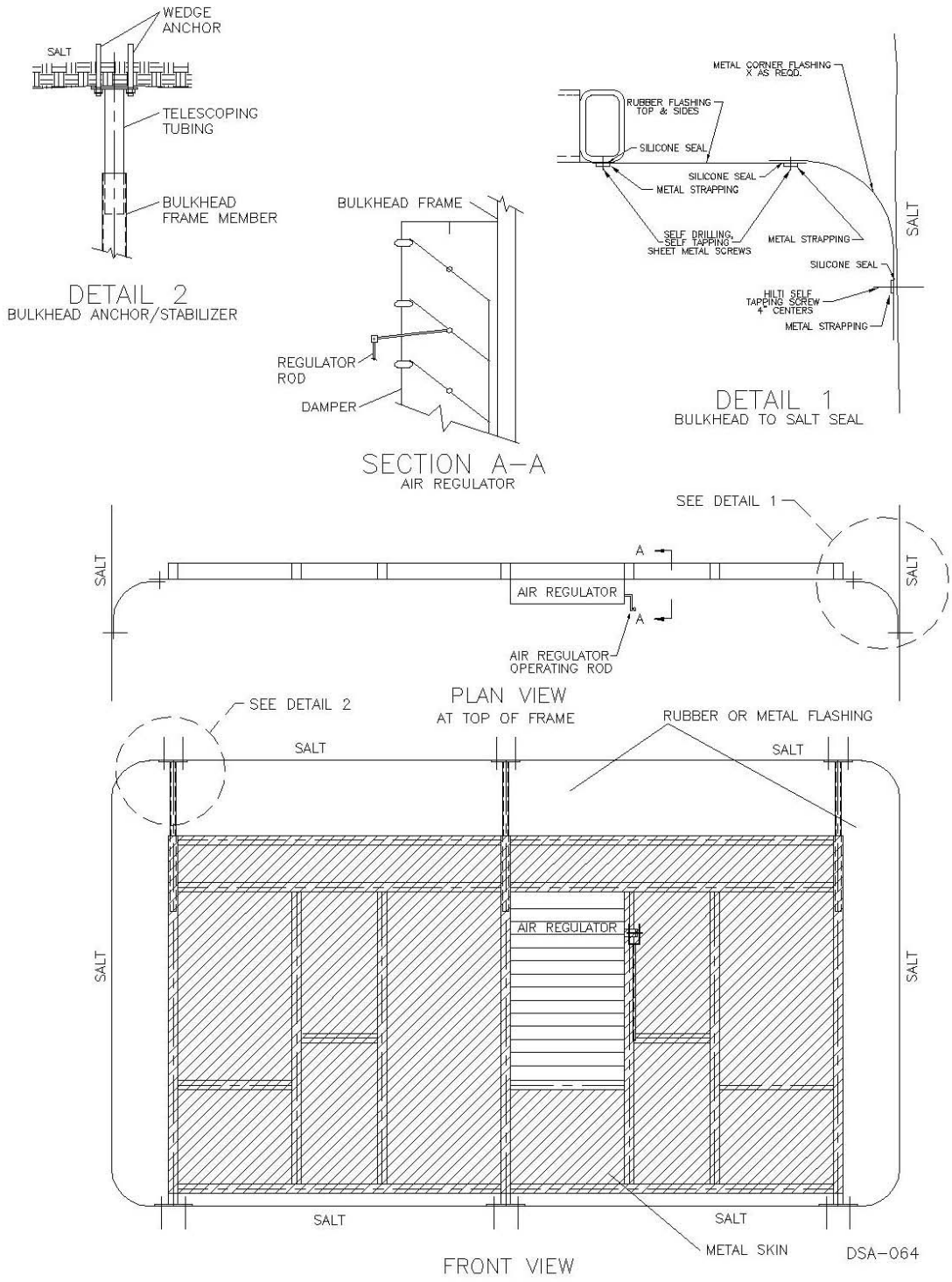

Figure 2.7-9. Typical Bulkhead Design and Components

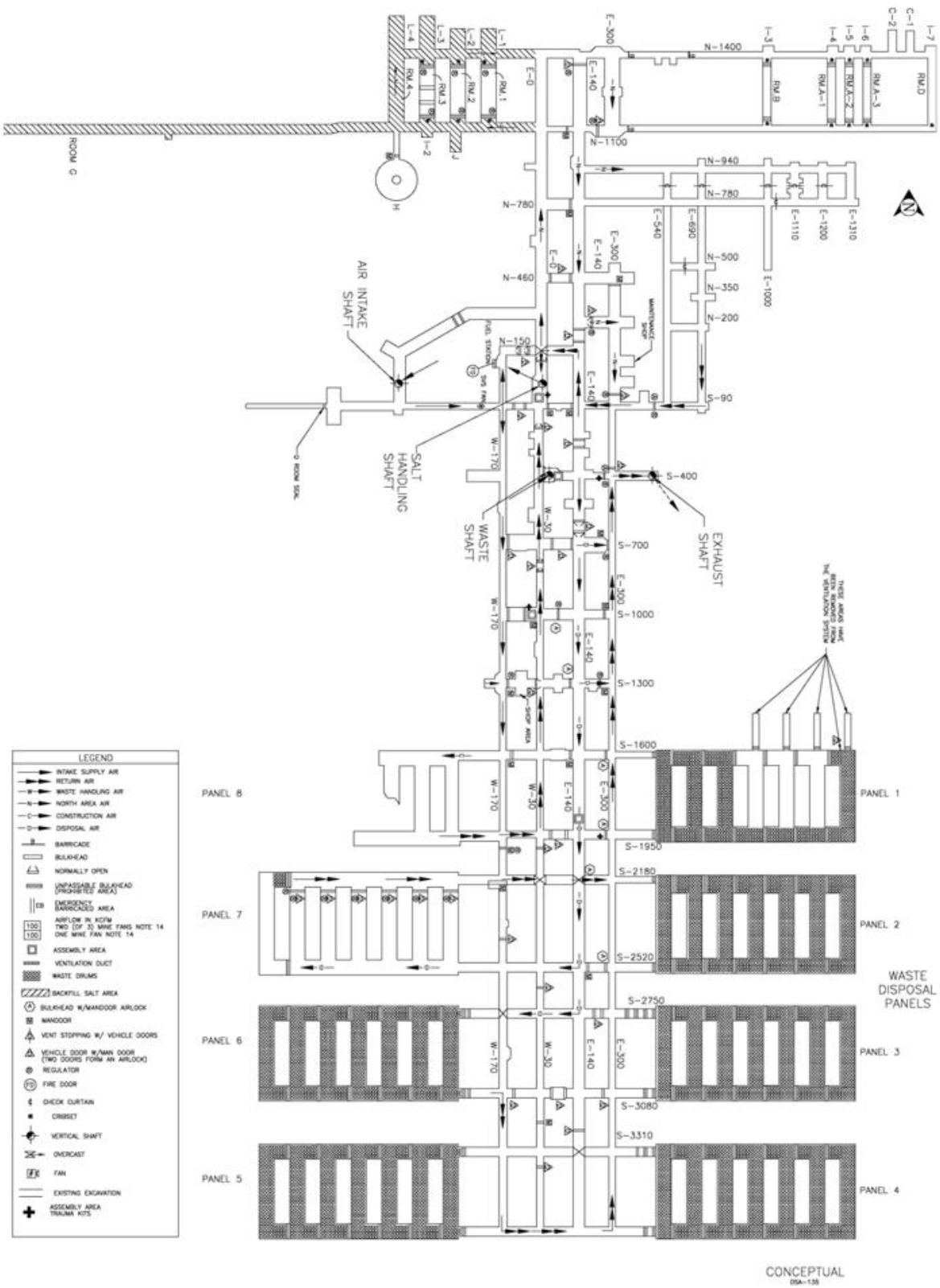

Figure 2.7-10. Underground Ventilation Airflow with Supplemental Ventilation System during Construction Mode

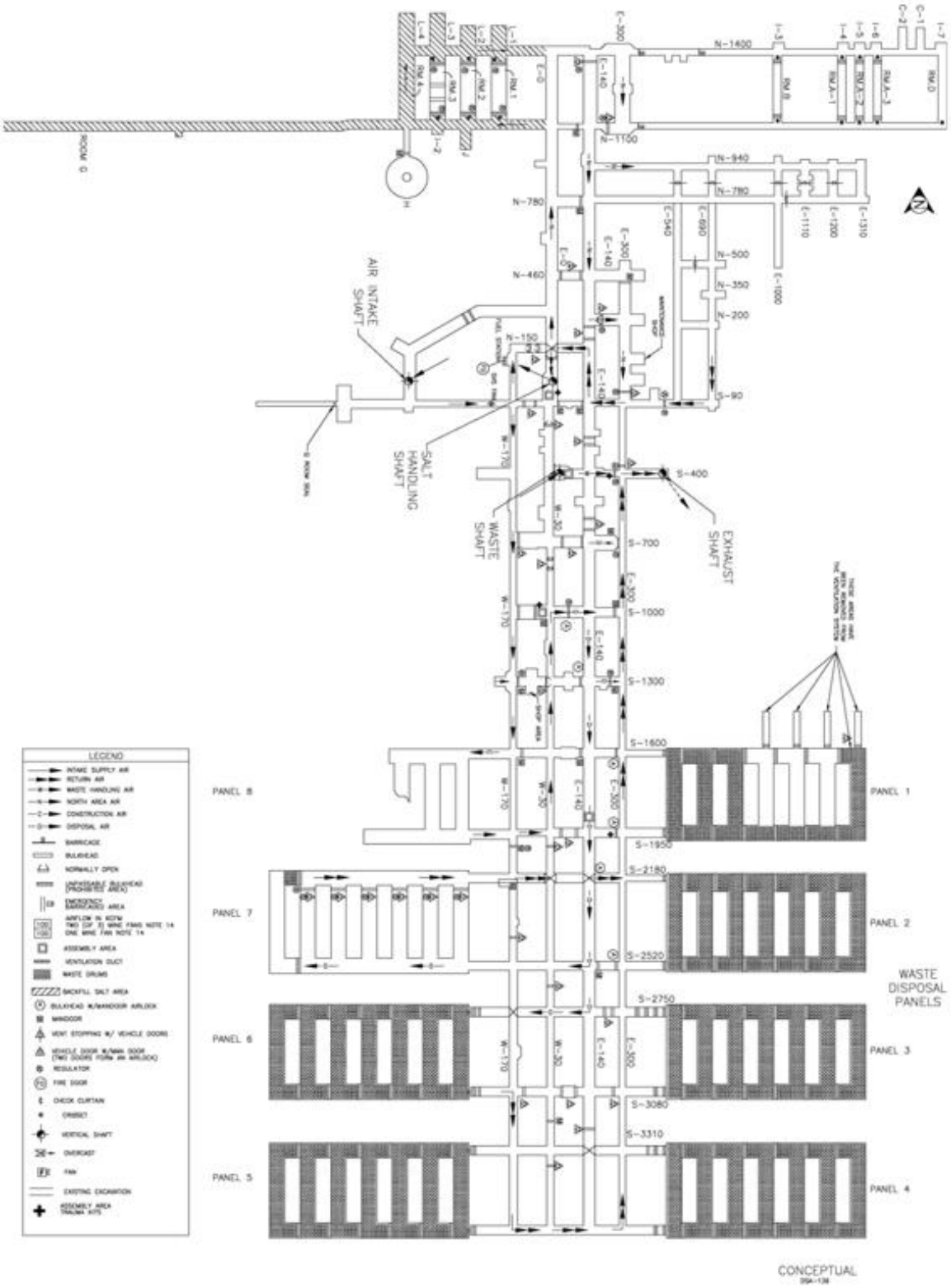

Figure 2.7-11. Underground Ventilation Airflow with Supplemental Ventilation System during Waste Handling Mode

2.8 SAFETY SUPPORT SYSTEMS

2.8.1 Radiation Monitoring System

The radiation monitoring system includes the plant vacuum system, Fixed Air Samplers (FASs), CAMs, Area Radiation Monitors, the Radiological Effluent Monitoring System (REMS), and portable radiation monitoring equipment.

The plant vacuum system provides a centrally located vacuum source that is used to draw air through filters that collect potentially radioactive particulates. The system supplies the vacuum source for CAMs and FASs located in the CH and RH Waste Handling areas of the WHB and Support Building. The vacuum system operating pumps and parameters are displayed in the CMR. The CAM and FAS units not connected to the plant vacuum system are equipped with their own vacuum pumps.

FASs are located in the WHB, the EFB, the Support Building, the TMF, the UG at S-400, the intake to the active panel and the exhaust of the active panel, and other places as deemed necessary based on site operations. These samplers provide an indication of airborne radioactivity. Some FASs are connected to the plant vacuum system and those that are not connected to the plant vacuum system have their own vacuum pumps. In the WHB, FASs are located at the TRUDOCKs, in Room 108, in the Hot Cell Complex Operating Gallery, in the RH Bay, and in the Transfer Cell Service Room. CAMs are installed at each operating station on the TRUDOCKS in the CH Bay and at the Payload Transfer Station in Room 108, and are in service during Waste Handling activities. CAMs are installed in the UG disposal area to sample along radiological area boundaries and the exhaust of active waste emplacement panels. The CAMs, when operating, collect and measure airborne particulates by pulling air through a filter in proximity to an alpha/beta detector. CAMs also provide real-time monitoring at Panel 6 and Panel 7, Room 7 isolation bulkheads that annunciate locally and communicate with the CMR.

CAMs that support RH Waste Handling Operations are located at the cask preparation station, in the CUR, in the Transfer Cell, and in the FCLR. The CAMs are positioned to detect airborne radioactive material at locations where the shipping container lids are removed or Waste Containers are removed from the shipping container. The CAMs at the cask preparation station and in the FCLR have an integrated gamma detector that functions as an Area Radiation Monitor. The integrated gamma detector alerts workers to changes in shielding. The integrated gamma detector in the FCLR alerts the operator should the telescoping port shield be improperly positioned or change position during transfer of an RH Waste Canister from the Transfer Cell to the RH Waste Cask. The CH and RH CAMs annunciate locally and in the CMR. An additional CAM has been added at Station B. One of the REMS skids has been dedicated to providing air for monitoring to this CAM.

The Area Radiation Monitor in the CUR is interlocked with the CUR shield door such that the CUR shield door cannot be opened upon a high radiation signal in the CUR. The Area Radiation Monitor also provides a local warning light, annunciation at the personnel access door to the CUR, and an alarm in the CMR if the personnel access door to the CUR is opened.

The REMS consists of effluent samplers installed on the WHB and UG exhaust. The REMS sampling equipment includes a pump, flow controller, sample holder, and delivery piping. The effluent sampler for the WHB exhaust is at Station C, which is located on the second floor of the WHB. Station C samples the WHB exhaust downstream of the HEPA filters associated with the RH and CH portion of the building. The effluent samples for the UVS exhaust are located upstream (Station A) and downstream (Station B) of the UVS HEPA filters. As noted above, one of the Station B skids has been dedicated to supporting the CAM by providing airflow samples.

Station A is located over the UG ventilation exhaust elbow at the surface and samples using probes that extend 21 feet below the elbow in the Exhaust Shaft. Station B samples from a point downstream from the UVS fans and HEPA filters. Station A contains three sampling skids, each splitting the sample and directing the air into three air samplers per skid. Station B contains two sampling skids. One Station B skid splits the sample and directs the air into three air samplers. The second Station B skid directs the sample to the CAM. The effluent samplers continuously collect particulate samples from the total volume of air being discharged for periodic confirmatory sampling requirements. The samplers consist of a sample delivery system, a filter holder, and a vacuum supply. Sample locations may have multiple filters to allow parallel sampling for outside agencies. The analysis data from effluent samplers are used for quantifying total airborne particulate radioactivity discharged. This is done to demonstrate compliance with the mandated regulatory requirements contained in "Environmental Standards for Management and Storage" (40 CFR 191, Subpart A) and "National Emission Standards for Hazardous Air Pollutants" (40 CFR 61), Subpart H, "National Emission Standards for Emissions of Radionuclides Other Than Radon from Department of Energy Facilities." The counting equipment used to analyze FAS filters provides indication of releases at much lower levels than general area samples or CAMs.

Effluent sampler Station D is located in the UG in E-300 before the disposal exhaust joins the exhaust from other areas of the UG. In addition to the permanently installed equipment, portable CAMs and portable air samplers similar to those installed in Waste Handling areas are used at the WIPP. Portable samplers are used for sampling routine/non-routine operations, for emergency air sampling, or to temporarily replace inoperable equipment. The CAMs are calibrated periodically and after repairs, using standards that are traceable to the National Institute for Standards and Technology. The source and detector geometry during calibration are the same as the sample and detector geometry in actual use.

The radiation monitoring system is further discussed in the Radiation Monitoring System SDD (SDD RM00, *Radiation Monitoring (RM00) System Design Description (SDD)*).

2.8.2 Fire Protection System

The WIPP Fire Protection System is designed to ensure personnel safety, mission continuity, and property conservation. Building designs incorporate features for fire prevention. The plant design meets the improved risk level of protection defined in DOE Order 420.1C, and satisfies applicable sections of the National Fire Protection Association (NFPA) codes, DOE orders, and federal codes described in the *Fire Hazard Analysis for the Waste Isolation Pilot Plant* (FHA) (WIPP-023).

The WIPP Fire Protection System design incorporates the following features:

- Most buildings and their support structures are protected by fixed, automatic FSSs designed to the individual hazards of each area.
- Noncombustible construction, fireproof masonry construction, and fire-resistant materials are considered for use, whenever possible, in buildings and structures.
- Fire separations are installed where required because of different occupancies per the Uniform Building Code®.
- In multistory buildings, vertical openings are protected by enclosing stairways, elevators, pipeways, electrical penetrations, etc., to prevent fire from spreading to upper floors. The Waste Hoist Tower is an exception and has an open path from the Waste Hoist Tower to the bottom of the Waste Shaft to accommodate the hoist ropes.

- A combustible loading control program is in place to minimize the accumulation of combustibles in the WHB, the area between the Support Building and the WHB, the Waste Transport Path in the UG, and the active waste Disposal Room(s).
- WIPP is implementing an "Only Essential Combustibles" policy for the UG and a more detailed procedure with provisions for permits signed by the Fire Marshall and a Fire Protection Engineer (FPE) restricts and regulates combustibles in the UG.
- The area within the PPA security fence is either paved or graveled. A gravel road parallels the PPA perimeter security fence, which acts as a firebreak in the event of a wildland fire. As described in the *WIPP Fire Hazard Analysis*, Appendix A, WIPP is considered a "low" wildland fire risk. Therefore, this design feature (DF) is only credited as "defense-in-depth."

The WHB and UG exhaust ventilation systems are designed to remove hot fire gases, toxic contaminants, explosive gases, and smoke. In the UG, automatic FSSs are installed on selected vehicles/equipment and in areas normally containing significant combustible material.

Adequate provisions for the safe exit of personnel are available for all potential fire occurrences, with evacuation alarm signals provided throughout occupied areas. Building evacuation plans help ensure the safe evacuation of building occupants during emergency conditions. UG evacuation is performed in accordance with the Underground Escape and Evacuation Plan. This plan identifies the evacuation routes, assembly areas, and self-contained self-rescuer caches. Additionally, firefighting support is available from the Hobbs and Carlsbad, New Mexico, fire departments.

The WIPP Fire Protection System, as described in the *Fire Protection System (FP00) System Design Description (SDD)* (SDD FP00), consists of four subsystems:

- Fire water supply and distribution system.
- Fire detection and alarm system.
- FSS.
- Radio fire alarm reporter system.

2.8.2.1 Fire Water Supply and Distribution System

The fire water supply and distribution system consists of two fire pumps and a pressure maintenance (jockey) pump located in the water pump house and a compound-loop yard distribution system. One fire pump is electric-motor driven and the other pump is diesel-engine driven. Both pumps are rated for 1,500 gallons per minute (gpm) at 125 psi. The system's maximum design flow rate is to provide fire water at a rate of 1,500 gpm for two hours, for a total of 180,000 gallons. All major components of the fire water supply and distribution system are listed by Underwriters' Laboratories Inc. and/or approved by Factory Mutual Engineering Corporation.

The fire water supply system receives its water supply from one onsite 180,000-gallon ground-level storage tank, which is part of the water distribution system.

Operation of the two fire pumps and the jockey pump is controlled by distribution-system pressure changes. The pumps are arranged for sequential operation. Under normal conditions, the jockey pump operates to maintain the designed system static pressure. Should there be a demand for fire water that exceeds the capacity of the jockey pump, the fire water demand will cause the system pressure to drop,

which automatically starts the electric fire pump. If the jockey and electric fire pumps cannot maintain system pressure, the diesel pump automatically starts.

The yard compound-loop distribution system serves all areas of the site by supplying fire water to all facilities containing a sprinkler system and to the fire hydrants, located at approximately 300-foot intervals throughout the site. The system contains numerous sectionalizing and control valves that are locked open and visually checked monthly.

2.8.2.2 Fire Detection and Alarm System

The fire detection and alarm system consists of multiple systems, each using most or all of the following components:

- Heat sensing fire detectors.
- Smoke detectors.
- Sprinkler system water flow alarm devices.
- Manual fire alarm systems.
- Control panels.
- Audible and visual warning devices.

Each building has a separate alarm system reporting to the CMR. Selected buildings have an alarm system reporting to the CMR via the radio fire alarm reporter system. A complete description of the type of FSS and fire detection system provided at each of the WIPP surface structures and the UG is provided in the FHA (WIPP-023) and the Fire Protection System SDD (SDD FP00).

2.8.2.3 Fire Suppression System

The FSS consists of several different FSSs or equipment that services the surface buildings, facilities, and the UG areas. These may include any one or more of the following fire suppression capabilities:

- Automatic wet-pipe sprinkler system.
- Automatic dry and wet chemical extinguishing systems.
- Portable fire extinguishers.

The automatic wet-pipe sprinkler system is the primary FSS for the WIPP surface structures. Each building has a separate fire sprinkler system supplied from the fire water distribution system, except for the TMF and one other building which are supplied from neighboring building sprinkler systems.

Sprinkler systems are maintained full of pressurized water. When a fire occurs, the heat produced will cause one or more sprinkler heads in the area to actuate, causing water to flow. The sprinklers will continue to flow until manually shut off.

Each sprinkler system installed in a permanent building includes the following features:

- A main drain.
- Instrumentation.

- An alarm valve.
- A water flow detection device.
- A water motor gong.
- An isolation valve.
- A fire department connection (except the water pumphouse).
- Distribution piping with installed fusible sprinklers.
- Valving.
- An inspector's test connection.

The availability of fire water at each sprinkler system is routinely checked as part of the inspection requirement for each system. Should the fire water distribution system become unavailable, adequate measures (e.g., not permitting any fire initiating activities at the affected buildings or implementing fire watches) are taken to provide a reduced risk of a large fire. The sprinkler systems are operable in the absence of electric power due to the diesel-driven fire pump. The sprinkler systems and the fire water supply and distribution system are not designed to withstand the effects of a DBE or DBT.

The WHB is protected by three independent sprinkler systems. The three sprinkler system risers are located in Room 108, in the RH Bay, and in the CH Bay. A water supply extension is installed between the Room 108 riser and the CH Bay riser can be used to supply either sprinkler system in the event one system loses its primary fire water supply. The WHB hose stations are disabled and not used.

Selected diesel-powered equipment in the UG is protected with dry chemical automatic FSSs. The automatic FSS is activated on detection of high temperatures associated with the fire. The system operates by directing a flow of fire suppressant into the engine compartment and affected fire hazards while simultaneously shutting down the fuel flow and the engine. Diesel powered equipment in the UG with engines in excess of 150 horsepower or having a turbocharger installed is protected with an automatic FSS discharging a wet chemical FSS in addition to an automatic FSS discharging dry chemical. Areas of combustible concentrations in the UG are protected by installed automatic dry chemical systems or aerosol based FSSs such as StatX which is Underwriters Laboratories (UL) listed for the application. Other types of automatic FSSs may be employed. The emphasis in UG fire suppression is to address rapidly growing fires with automatic FSSs to address fire in the incipient stage. Other FSSs, away from waste disposal areas, are designed to provide incipient fire suppression to assist in protecting life safety while at the same time reducing smoke emission.

2.8.2.4 Radio Fire Alarm Reporter System

The radio fire alarm reporter system provides fire alarm and system trouble annunciations in the CMR for structures not connected to the CMS local processing units. This system consists of radio transmitters that transmit alarm and trouble signals via a Factory Mutual Engineering Corporation signal to a central base station/receiver.

2.8.2.5 Fire Protection System Design, Installation, Testing, and Maintenance

The following NFPA standards apply at the WIPP:

- The fire water supply and distribution system is designed, installed, tested, and maintained in accordance with the following:

  - *Standard for the Installation of Stationary Pumps for Fire Protection* (NFPA 20).
  - *Standard for the Installation of Private Fire Service Mains and Their Appurtenances* (NFPA 24).
  - *Standard for the Inspection, Testing, and Maintenance of Water-Based Fire Protection Systems* (NFPA 25).
- The automatic wet-pipe sprinkler systems are designed, installed, tested, and maintained in accordance with the following:
  - *Standard for the Installation of Sprinkler Systems* (NFPA 13).
  - *Standard for the Inspection, Testing, and Maintenance of Water-based Fire Protection Systems* (NFPA 25).
- The chemical FSSs are designed, installed, tested, and maintained in accordance with the following:
  - *Standard for Dry Chemical Extinguishing Systems* (NFPA 17).
  - *Standard for Wet Chemical Extinguishing Systems* (NFPA 17A).
  - *Standard for Fire Prevention and Control in Metal/Nonmetal Mining and Metal Mineral Processing Facilities* (NFPA 122).
- The fire detection and alarm systems are designed, installed, tested, and maintained in accordance with the following:
  - *National Electrical Code* (NFPA 70).
  - *National Fire Alarm Code* (NFPA 72).
- The radio fire alarm reporter system is designed, installed, tested, and maintained in accordance with the following:
  - *National Fire Alarm Code* (NFPA 72).
  - *Standard for the Installation, Maintenance, and Use of Emergency Services Communications Systems* (NFPA 1221).

All new systems installed for UG equipment and fixed areas of combustible material will follow the appropriate requirements of applicable NFPA codes to the extent applicable. The periodic testing and maintenance of these systems will be captured in procedures addressing NFPA required testing, maintenance, and frequency of activities.

2.9 UTILITY DISTRIBUTION SYSTEMS

2.9.1 Electrical System

The WIPP electrical system is designed to provide normal and backup power, grounding for electrically energized equipment and other plant structures, lightning protection for the plant, and illumination for the WIPP surface and UG.

The WIPP has standard industrial electrical distribution equipment including the following:

- Medium-voltage switchgear and buses.
- Medium-voltage to low-voltage step-down unit substations.
- Motor control centers.
- Small distribution transformers and panels.
- Relay and protection circuitry.
- Station batteries and associated synchronous inverters.
- Two diesel generators.

The electrical system is designed to supply alternating current power at the following approximate bus voltages:

- 13.8-kilovolt (kV), three-phase, three-wire, 60-hertz power supply for the main plant substation, UG switching stations, and surface and UG unit substation transformers.
- 4.16 kV, three-phase, three-wire, 60-hertz power supply for the main exhaust-fan drive motors.
- 2.4 kV, three-phase, 60-hertz power supply for the drive motor for the motor-generator set, which provides the backup supply for the Salt Handling Shaft Hoist drive motor.
- 480/277-volt, three-phase, 60-hertz power supply for motor control centers, the Air Intake Shaft Hoist drive motor, solid-state direct current converter systems for the Salt Handling Shaft Hoist and Waste Hoist, UG filtration fans, lighting, and power distribution transformers.
- 120/208-volt, three-phase, 60-hertz power supply for lighting, instrumentation, communications, control systems, and small motor-driven equipment.
- 120/208-volt, three-phase, 60-hertz UPS for control and instrumentation, which must be continuously energized under all Plant Operating Modes.

2.9.1.1 Normal Power Source

The WIPP site normal power is from a public utility company, which supplies electrical power from their 115-kV Potash/Kerrmac Junction transmission line from the north and Whitten/Jal substation line from the south. The north line is approximately 9 miles long, while the south line is approximately 19 miles long. The Potash Junction and Whitten substations each have two feeders from multiple generating stations, and loss of one generating source does not interrupt power to the WIPP site.

The utility substation at the WIPP site is located east of the PPA. Area substations are located at the various surface facilities. Underground conduits, cable duct banks, and buried cables connect the plant substation with the area substations.

2.9.1.2 Backup Power Source

In case of a loss of utility power, backup power to selected loads can be supplied by either of the two onsite 1,100-kilowatt diesel generators. The generators provide 480 volts of alternating current power to the loadings listed in Table 2.9-1. Each of the diesel generators can furnish power for preselected loads, to operate the Air Intake Shaft Conveyance for UG personnel evacuation, and other selected backup loads in accordance with procedures in the WP 04-ED series of facility operations procedures. Generators are

conservatively estimated to be running at load within 60 minutes. The onsite total fuel storage capacity is sufficient for the operation of one diesel generator at full load for one day, and additional fuel supplies are readily available within a few hours by tank truck, allowing online refueling and continued operation.

Facility Operations personnel start the diesel generators. The diesel generators can be started from the control panel on each diesel generator or from the CMR. Monitoring of the diesel generators and associated breakers is possible at the CMR, thus providing the ability to energize selected loads from the backup power source in sequence and without exceeding generator capacity.

Table 2.9-1. Diesel Generator Loadings

Loadings
UPS, CMS, WHB, CAMs
CMR HVAC system utilities
Communications systems
Air Intake Shaft Conveyance(if necessary for UG evacuation)
WHB lighting
WHB cranes
WHB vacuum pumps
Main air compressors
UG exhaust fans
WHB fans

2.9.1.3 Uninterruptible Power Supply

The central UPS, located in the Support Building, provides transient free, reliable 120/208 volts of alternating current power to the essential loads, listed in Table 2.9-2. This ensures continuous power to the radiation detection system for airborne contamination and area radiation monitoring, local processing units, computer room, and CMR even during the interval between the loss of offsite power and initiation of backup diesel generator power. Additional UPSs provide transient free power to strategically located local processing units for the radiation monitoring system on the surface, in selected areas in the Exhaust Shaft, and in UG passages and waste disposal areas. In case of loss of alternating current power input to the UPSs, the dedicated batteries can supply power to a fully loaded UPS for 30 minutes.

Table 2.9-2. Uninterruptible Power Supply Loads

Load on Central UPS
Radiological Monitoring System (Area Radiation Monitor and CAM)
CMS equipment in the Support Building and WHB
Communication system in Support Building and WHB
Seismic trip in WHB
Network computers and equipment in the Support Building computer room

Loads on Individual UPS Units
CMS equipment in facilities other than Support Building and WHB
Selected surface and UG radiological monitoring units
Emergency Operations Center, Safety Building, Guard and Security Building
Safety communication and alarm system in facilities other than Support Building and WHB

2.9.1.4 Lightning Protection and Grounding

The WIPP lightning protection system uses the plant ground system and consists of lightning arresters located at select substations and a lightning dissipation system. The lightning dissipation system uses arrays that encircle the WIPP fenced area and umbrella arrays, which are mounted on top of select facilities and hoist head frames. Dissipation arrays are installed over the hoist head frames and the WHB. Hemisphere arrays are installed over the EFB and also over the Salt Handling Shaft and Air Intake Shaft head frames. A conical array is installed over the Waste Hoist Tower. Roof arrays are located along the outer rim of the WHB and between supports on the site-perimeter lamp poles. The arrays between site-perimeter lamp poles provide protection to the CH and RH shipping containers in the parking area. The arrays associated with the WHB and Waste Hoist Tower not only protect personnel but also the Waste Containers from lightning strikes.

The WIPP grounding system uses a resistive grounded electrical system and consists of grounding resistors, a direct buried surface site ground grid, bare copper UG facility ground, facility ground rings, facility ground conductors, ground buses, equipment grounding conductors, and bonding, and grounding electrodes. The grounding associated with the utility switchyard is separate from the WIPP site plant grounding. The lightning protection and grounding systems are discussed in SDD ED00, *Electrical System (ED00) System Design Description (SDD).*

2.9.1.5 Safety Considerations and Controls

Failure of the normal distribution system or any of its components will not affect safe conditions of the WIPP facilities. Site utilities are not required to place the site in a safe configuration. Personnel may suspend Waste Handling Operations and leave the area without site utilities.

2.9.2 Compressed Air System

The compressed air system is diverse in the types and sizes of compressors used and redundancy is provided for the main plant air compressors, Salt Handling Shaft Hoist house, and the UG. All are electrically driven except for the diesel-powered backup compressor in the UG.

Air dryers are provided for both the plant air system and the instrument air system. Instrument air is supplied to selected doors in the WHB, used to operate dampers and control systems for the UVS, and supplied to HVAC systems in the EFB.

2.9.3 Plant Monitoring and Communications Systems

The plant monitoring and communications systems include onsite and plant-to-offsite coverage and are designed to provide immediate instructions to ensure personnel safety, facility safety and security, and efficient operations under normal and emergency conditions. Plant monitoring and communications systems include the following:

- CMS.
- Plant communications:
  - Touch-tone phones and/ or cell phones.
  - Mine pager phones.
  - Plant public address system including alarms and the site notification system.
  - UG evacuation signal system.
  - Radio.

2.9.3.1 Central Monitoring System

The CMS collects and monitors real-time site data, automatically and manually, during normal and emergency conditions. The UG and surface data monitored by the CMS are gathered, processed, stored, logged, and displayed. The data are collected continuously from approximately 1,500 remote sensors.

The CMS is a computer-based monitoring and control system. It is used for real-time site data acquisition, display, storage, alarm, and logging, and for the control of site components. The CMS monitors selected components from the following systems:

- Radiation monitoring equipment and effluent sampling stations.
- Electrical power distribution status, including backup diesel operation.
- Fire detection and alarm system.
- Ventilation system, including UG exhaust fan, mining damper position, fan status, flow measurement, and filter differential pressure.
- Meteorological data, including wind speed and direction, temperature, and barometric pressure.
- Facility systems, including air compressors, vacuum pumps, and water storage tank levels.

The CMS has five operator workstations, which display alarms, status, trends, graphics, and interactive operations. There are two operator workstations and an engineer’s workstation located in the CMR, two operator workstations in the computer room, and a CMS backup operator workstation located in the security operations center. The CMS electronic data storage devices are in the computer room adjacent to the CMR. The CMS sources of backup electrical power include a UPS and the diesel generators.

2.9.3.2 Plant Communications

The phone system is a private automatic branch exchange network providing conventional onsite and offsite telephone services.

The mine pager phone system is an independent, hard-wired, battery-operated system for communications throughout the UG and between the surface and the UG. Mine pager phones are located throughout the UG and in surface structures to support daily operations and emergencies.

The plant public address and alarm systems provide for the initiation of surface and UG evacuation alarms and public address announcements from the CMR and local stations. The public address system master control console is located in the CMR, with paging stations in the following locations:

- Support Building.
- WHB.
- Water Pump House.
- Guard and Security Building.
- Salt Shaft Hoist House and Headframe.
- EFB.
- Safety Building.
- Engineering Building.
- Warehouse.
- Shops.
- UG.

The UG evacuation signal is separate from the public address system and includes strobe lights. A UG evacuation signal is initiated automatically by a UG fire alarm signal via the CMS, manually by the CMR operator, or from pushbuttons in the Salt Handling Shaft Hoist House and Waste Hoist Control Room.

Radio includes two-way and paging onsite and offsite radio systems with base stations in the CMR and the security operations center.

The plant communication systems are not designed to withstand the effects of a DBE or DBT.

2.10 AUXILIARY SYSTEMS AND SUPPORT FACILITIES

2.10.1 Water Distribution System

The water distribution system is designed to receive water from a commercial water department, provide storage for fire and domestic water, chlorinate and store domestic water, and distribute domestic water. The Water Pump House contains the fire pumps, the domestic water pumps, and the water chlorination equipment.

2.10.2 Sewage Treatment System

The sewage treatment facility is a zero-discharge facility consisting of two primary settling ponds, two polishing ponds, and three evaporation basins. The entire facility is lined with synthetic liners and is designed to dispose of domestic sewage as well as site-generated brine waters from observation wells and from dewatering of site shafts.

2.10.3 Meteorological Tower

The WIPP site meteorological monitoring tower is located approximately 1,970 feet northeast of the WHB. Instrumentation on the tower measures and records wind speed, wind direction, and temperature at elevations of 2, 10, and 50 meters. The data are displayed in the CMR and in the Emergency Operations Center. The meteorological data are used for development of the air dispersion coefficient used in the consequence analysis discussed in Chapter 3.0, “Hazard and Accident Analysis, and Control Selection.”

2.10.4 Central Monitoring Room

The CMR provides a continuously manned central location furnished with CMS operator and engineer stations; plant communications system dial phones, mine pager phones, the plant public address and alarms system master control console; a two-way radio base station; a satellite weather monitor; a commercial television station weather monitor; and space, communications, and furnishings for the Operations Assistance Team.

The primary functions of the CMR are as follows: monitoring parameters associated with required plant operating conditions and weather conditions; providing a central communications center; reporting of occurrences by all employees; providing site conditions to the Emergency Operations Center; and providing accommodation for an assembly of advisors to monitor an abnormal condition and provide operational assistance.

The CMR includes the operator stations to control selected site components such as UG ventilation fans, bulkhead doors and dampers, backup diesel generator operation, and site power distribution breaker operation.

The CMS is a supervisory control and data acquisition system consisting of a mix of functional units communicating on a redundant network throughout the facility on the surface and in the UG. The network is made up of optical fiber and the associated fiber distribution units, switches, etc. The CMS is used for real-time site data acquisition, display, storage, alarming and for the control of site components. The CMS monitors process, environmental, electrical, mechanical, radiation, and fire protection systems and provides manual and automatic control of UG ventilation, backup power, UG evacuation alarm, and electrical distribution. The CMS consists of local processing units, operator and engineer workstations server PCs, printers, and UPSs.

2.11 REFERENCES

10 CFR 71, “Packaging and Transportation of Radioactive Material,” *Code of Federal Regulations.* U.S. Government Printing Office, Washington, DC.

10 CFR 71, “Packaging and Transportation of Radioactive Material,” Section 71.17, “General License: NRC-Approved Package,” *Code of Federal Regulations*. U.S. Government Printing Office, Washington, DC.

10 CFR 71, “Packaging and Transportation of Radioactive Material,” Section 71.63, “Special Requirement for Plutonium Shipments,” *Code of Federal Regulations.* U.S. Government Printing Office, Washington, DC.

10 CFR 830, “Nuclear Safety Management,” Section 830.203, “Unreviewed Safety Question Process,” *Code of Federal Regulations*. U.S. Government Printing Office, Washington, DC.

10 CFR 835, “Occupational Radiation Protection,” Appendix D, “Surface Contamination Values,” *Code of Federal Regulations.* U.S. Government Printing Office, Washington, DC.

30 CFR 57, “Safety and Health Standards – Underground Metal and Nonmetal Mines,” *Code of Federal Regulations*. U.S. Government Printing Office, Washington, DC.

30 CFR 57, “Safety and Health Standards – Underground Metal and Nonmetal Mines,” Subpart B, “Ground Control,” *Code of Federal Regulations*. U.S. Government Printing Office, Washington, DC.

30 CFR 57, "Safety and Health Standards – Underground Metal and Nonmetal Mines," Subpart R, "Personnel Hoisting," *Code of Federal Regulations*. U.S. Government Printing Office, Washington, DC.

40 CFR 61, "National Emission Standards for Hazardous Air Pollutants," Subpart H, "National Emission Standards for Emissions of Radionuclides Other Than Radon from Department of Energy Facilities," *Code of Federal Regulations*. U.S. Government Printing Office, Washington, DC.

40 CFR 191, "Environmental Radiation Protection Standards for Management and Disposal of Spent Nuclear Fuel, High-Level and Transuranic Wastes," Subpart A, "Environmental Standards for Management and Storage," *Code of Federal Regulations*. U.S. Government Printing Office, Washington, DC.

40 CFR 191, "Environmental Radiation Protection Standards for Management and Disposal of Spent Nuclear Fuel, High-Level and Transuranic Radioactive Wastes," Section 191.14, "Assurance Requirements," Paragraph (d), *Code of Federal Regulations*. U.S. Government Printing Office, Washington, DC.

40 CFR 194, "Criteria for the Certification and Re-Certification of the Waste Isolation Pilot Plant's Compliance with The 40 CFR Part 191 Disposal Regulations," Section 194.44, "Engineered Barriers," *Code of Federal Regulations*. U.S. Government Printing Office, Washington, DC.

49 CFR 178.350, "Specifications for Packagings," Section 178.350, "Specification 7A; General Packaging, Type A," *Code of Federal Regulations*. U.S. Government Printing Office, Washington, DC.

19.6.5 NMAC, "New Mexico Mine Safety Code for All Mines Including Open-Cut and Open-Pit," *New Mexico Administrative Code*, as amended.

Administrative Order Under the New Mexico Hazardous Waste Act 74-4-13, February 28, 2014.

ANSI/ASME N510-1989, *Testing of Nuclear Air-Treatment Systems*, American National Standards Institute, New York, NY.

CH-TRAMPAC, *Contact-Handled Transuranic Waste Authorized Methods for Payload Control* (current revision), U.S. Department of Energy, Carlsbad Field Office, Carlsbad, NM.

DOE/CBFO-11-3470, *A Management Proposal for Salt Disposal Investigations with a Field Scale Heater Test at WIPP*, Revision 0, June 2011, U.S. Department of Energy, Carlsbad Area Office, Carlsbad, NM.

DOE/EIS-0026-S-2, *Waste Isolation Pilot Plant Disposal Phase Final Supplemental Environmental Impact Statement*, September 1997, U.S. Department of Energy, Carlsbad Area Office, Carlsbad, NM.

DOE Guide 420.1-1, *Nonreactor Nuclear Safety Design Criteria and Explosives Safety Criteria Guide*, March 28, 2000, U.S. Department of Energy, Washington, DC.

DOE Guide 420.1-1A, *Nonreactor Nuclear Safety Design Criteria for use with DOE O 420.1C, Facility Safety*, December 4, 2012, U.S. Department of Energy, Washington, DC.

DOE Guide 424.1-1B, *Implementation Guide for Use in Addressing Unreviewed Safety Question Requirements*, April 8, 2010, U.S. Department of Energy, Washington, DC.

DOE-HDBK-1169, *Nuclear Air Cleaning Handbook*, November 2003, U.S. Department of Energy, Washington, DC.

DOE/NTP 96-1204, *National TRU Waste Management Plan*, Revision 3, July 2002, U.S. Department of Energy, Carlsbad Field Office, Carlsbad, NM.

DOE Order 420.1C, Change 1, *Facility Safety*, February 27, 2015, U.S. Department of Energy, Washington, DC.

DOE Order 430.1B, Change 2, *Real Property Asset Management*, April 25, 2011, U.S. Department of Energy, Washington, DC.

DOE Order 458.1, Change 2, 2011, *Radiation Protection of the Public and the Environment*, June 6, 2011, U.S. Department of Energy, Washington, DC.

DOE Order 6430, *General Design Criteria Manual for Department of Energy Facilities*, Draft (superseded), June 10, 1981, U.S. Department of Energy, Washington, DC.

DOE-STD-1066-99, *Fire Protection Design Criteria*, July 1999, U.S. Department of Energy, Washington, DC.

DOE/WIPP 02-3122, *Transuranic Waste Acceptance Criteria for the Waste Isolation Pilot Plant* (current revision), U.S. Department of Energy, Carlsbad Field Office, Carlsbad, NM.

DOE/WIPP 02-3212, *Ground Control Annual Plan for the Waste Isolation Pilot Plant*, Revision 6, April 2008, U.S. Department of Energy, Carlsbad Field Office, Carlsbad, NM.

DOE/WIPP 11-3177, *Geotechnical Analysis Report for July 2009–June 2010*, U.S. Department of Energy, Carlsbad Field Office, Carlsbad, NM.

DOE/WIPP 86-010, *Waste Isolation Pilot Plant Design Validation Final Report*, October 1986, U.S. Department of Energy, Washington, DC.

ECO 11611, *Evaluation for Hot Cell Structural Degradation*, Engineering Change Order 11611, August 24, 2006, Washington TRU Solutions, LLC, Carlsbad, NM.

ECO 11676, *13-Ton CH Forklift Fire Evaluation*, Engineering Change Order 11676, November 2006, Washington TRU Solutions, LLC, Carlsbad, NM, Carlsbad, NM.

Golder, Personal Communication by Letter from Golder Associates Inc. to Nuclear Waste Partnership LLC, “Early Time Generation of Methane and Hydrogen in Filled Panel at the WIPP,” November 30, 2006.

HWFP, *Waste Isolation Pilot Plant Hazardous Waste Facility Permit*, NM4890139088-TSDF (current revision), New Mexico Environment Department, Santa Fe, NM.

Memorandum of Understanding between the U.S. Department of Energy (DOE) and the Mine Safety and Health Administration, U.S. Department of Labor, Formalizing a Working Relationship between DOE and MSHA. October 7, 2014.

New Mexico State Mining Law 69-8-16.

NFPA 13, *Standard for the Installation of Sprinkler Systems*, 2007 Edition, National Fire Protection Association, Quincy, MA.

NFPA 17, *Standard for Dry Chemical Extinguishing Systems*, 2002 Edition, National Fire Protection Association, Quincy, MA.

NFPA 17A, *Standard for Wet Chemical Extinguishing Systems*, 2002 Edition, National Fire Protection Association, Quincy, MA.

NFPA 20, *Standard for the Installation of Stationary Pumps for Fire Protection*, 2007 Edition, National Fire Protection Association, Quincy, MA.

NFPA 24, *Standard for the Installation of Private Fire Service Mains and Their Appurtenances*, 2007 Edition, National Fire Protection Association, Quincy, MA.

NFPA 25, *Standard for the Inspection, Testing, and Maintenance of Water-Based Fire Protection Systems*, 2008 Edition, National Fire Protection Association, Quincy, MA.

NFPA 70®, *National Electrical Code®*, 2008 Edition, National Fire Protection Association, Quincy, MA.

NFPA 72®, *National Fire Alarm Code®*, 2007 Edition, National Fire Protection Association, Quincy, MA.

NFPA 122, *Standard for Fire Prevention and Control in Metal/Nonmetal Mining and Metal Mineral Processing Facilities*, 2015 Edition, National Fire Protection Association, Quincy, MA.

NFPA 220, *Standard on Types of Building Construction*, 2006 Edition, National Fire Protection Association, Quincy, MA.

NFPA 1221, *Standard for the Installation, Maintenance, and Use of Emergency Services Communications Systems*, 2007 Edition, National Fire Protection Association, Quincy, MA.

NRC, 2010, *10-160B Certificate of Compliance*, Docket No. 71-9204 (current revision), U.S. Nuclear Regulatory Commission, Washington, DC.

NRC, 2011, *RH-TRU 72-B Certificate of Compliance*, Docket No. 71-9212 (current revision), U.S. Nuclear Regulatory Commission, Washington, DC.

NS-05-001, 2005, *WIPP Contact Handled (CH) Documented Safety Analysis (DSA) Revision 10 Source Term, Dose Consequence and Supporting Information*, March 2005, Washington TRU Solutions, LLC, Carlsbad, NM.

Public Law 102-579, et seq., 1992 (1996), *Waste Isolation Pilot Plant Land Withdrawal Act of 1992*, October 30, 1992 (as amended by Public Law 104-201, September 23, 1996).

SDD CF00-GC00, *Plant Buildings, Facilities, and Miscellaneous Equipment System Design Description (SDD)* (current revision), Nuclear Waste Partnership LLC, Carlsbad, NM.

SDD ED00, *Electrical System (ED00) System Design Description (SDD)* (current revision), Nuclear Waste Partnership LLC, Carlsbad, NM.

SDD FP00, *Fire Protection System (FP00) System Design Description (SDD)* (current revision), Nuclear Waste Partnership LLC, Carlsbad, NM.

SDD GPDD, *General Plant Design Description (GPDD) System Design Description (SDD)*, (current revision), Nuclear Waste Partnership LLC, Carlsbad, NM.

SDD HV00, *Heating, Ventilation and Air Conditioning System System Design Description (SDD)* (current revision), Nuclear Waste Partnership LLC, Carlsbad, NM.

SDD RM00, *Radiation Monitoring (RM00) System Design Description (SDD)* (current revision), Nuclear Waste Partnership LLC, Carlsbad, NM.

SDD UH00, *Underground Hoisting System Design Description* (current revision), Nuclear Waste Partnership LLC, Carlsbad, NM.

SDD WH00, *Waste Handling System (WH00) System Design Description (SDD)* (current revision), Nuclear Waste Partnership LLC, Carlsbad, NM.

Waste Isolation Pilot Plant Recovery Plan (current revision), Nuclear Waste Partnership LLC, Carlsbad, NM.

WIPP-023, *Fire Hazard Analysis for the Waste Isolation Pilot Plant* (current revision), Nuclear Waste Partnership LLC, Carlsbad, NM.

WP 04-ED, *WIPP Electrical Distribution Surface Series of Technical Procedures* (current revisions), Nuclear Waste Partnership LLC, Carlsbad, NM.

WP 09-CN3005, *Graded Approach to Application of QA Controls*, Management Control Procedure (current revision), Nuclear Waste Partnership LLC, Carlsbad, NM.

WP 12-5, *Waste Isolation Pilot Plant Radiation Safety Manual* (current revision), Nuclear Waste Partnership LLC, Carlsbad, NM.

WP 13-1, *Nuclear Waste Partnership LLC Quality Assurance Program Description* (current revision), Nuclear Waste Partnership LLC, Carlsbad, NM.

WTS, Personal Communication by Letter from Washington TRU Solutions, LLC, “Estimation of Hydrogen Generation Rates from Radiolysis in WIPP Panels,” July 2006.

This page intentionally left blank

Table of Contents

3.0 HAZARD AND ACCIDENT ANALYSIS, AND CONTROL SELECTION 3-1
3.1 Introduction 3-1
3.2 Requirements 3-2
3.3 Hazard Analysis 3-4
3.3.1 Methodology 3-4
3.3.1.1 Hazard Identification 3-4
3.3.1.2 Hazard Evaluation 3-8
3.3.2 Hazard Analysis Results 3-19
3.3.2.1 Hazard Identification 3-19
3.3.2.2 Hazard Categorization 3-22
3.3.2.3 Results of Hazard Evaluation 3-23
3.3.2.4 Defense-in-Depth 3-89
3.3.2.5 Facility Worker Safety 3-90
3.3.2.6 Environmental Protection 3-96
3.4 Accident Analysis 3-97
3.4.1 Accident Identification Methodology 3-97
3.4.1.1 Source Term 3-97
3.4.1.2 Material at Risk 3-98
3.4.1.3 Damage Ratio 3-100
3.4.1.4 Airborne Release and Respirable Fractions 3-102
3.4.1.5 Leak Path Factor 3-103
3.4.1.6 Dose-per-Activity Modeling 3-103
3.4.1.7 Consequence 3-105
3.4.2 Accident Selection 3-106
3.4.3 Analysis of Design Basis/Evaluation Basis Accidents 3-106
3.4.3.1 Large Pool Fire in Waste Shaft 3-106
3.4.3.2 Loss of Confinement at the Waste Shaft Station due to Drop of Vehicle/Equipment from the Waste Collar 3-109
3.5 Beyond Design/Evaluation Basis Accidents 3-111
3.5.1 Beyond Evaluation Basis Accidents – NPH Event 3-111
3.5.2 Beyond Evaluation Basis Accidents – Exothermic Reaction Analysis 3-111
3.5.3 Multiple Noncompliant Container Failures 3-112
3.5.4 Underground Collapse/Catastrophic Roof Fall 3-112
3.6 Planned Design and Operational Safety Improvements 3-112
3.7 References 3-114

List of Tables

Table 3.3-1. Event Types 3-12
Table 3.3-2. Frequency Levels 3-14
Table 3.3-3. Consequence Levels 3-15
Table 3.3-4. Risk Bins 3-17
Table 3.3-5. Hazard Identification Summary 3-20
Table 3.3-6. Listing of Unique and Representative Hazard Evaluation Events 3-24
Table 3.3-7. Categorization of Hazard Evaluation Events 3-31
Table 3.3-8. Waste Container Types and Standard Waste Assembly Configuration 3-36
Table 3.3-9. Hazard Evaluation Events Requiring Further Evaluation 3-37
Table 3.3-10. Credited Control Summary 3-82
Table 3.4-1. Material at Risk Limits Based on Entire Waste Container Population 3-99
Table 3.4-2. Material at Risk Limits Based on SRS Waste Container Population 3-100
Table 3.4-3. Waste Container Damage Ratios 3-101
Table 3.4-4. Airborne Release Fraction*Respirable Fraction from DOE-STD-5506-2007 3-102
Table 3.4-5. Mechanical Insult Airborne Release Fraction*Respirable Fraction from DOE-STD-5506-2007 3-102

3.0 HAZARD AND ACCIDENT ANALYSIS, AND CONTROL SELECTION

3.1 Introduction

This chapter of the Documented Safety Analysis (DSA) for the Waste Isolation Pilot Plant (WIPP) provides an assessment of hazards associated with normal, abnormal, and accident conditions involving Contact-Handled (CH) and Remote-Handled (RH) Transuranic (TRU) Waste Handling and disposal operations at the WIPP. The assessment also includes Natural Phenomena Hazards (NPHs) and man-made external events, including the identification of energy sources or processes that might contribute to the generation or uncontrolled release of radioactive and other hazardous materials (HAZMAT). In addition, hazardous events that may be beyond the design basis of the WIPP facility were assessed. This chapter was developed using the guidelines of U.S. Department of Energy (DOE) Standards DOE-STD-3009-2014, *Preparation of Nonreactor Nuclear Facility Documented Safety Analyses*, and DOE-STD-5506-2007, *Preparation of Safety Basis Documents for Transuranic (TRU) Waste Facilities*, to satisfy the requirements of the *Code of Federal Regulations* (CFR) 10 CFR 830, "Nuclear Safety Management."

Hazard analysis does the following:

- Systematically identifies and assesses hazards.
- Considers the complete spectrum of hazardous events that may occur due to facility operations (under normal, abnormal, and accident conditions), NPHs, and man-made external events.
- Evaluates the potential for hazards to develop into hazardous events.
- Analyzes potential accident consequences to the public and workers.
- Estimates the likelihood of occurrence of hazardous events.
- Identifies and assesses associated preventive and mitigative controls within the facility that form the basis for defense-in-depth against adverse consequences to the workers, public, and environment from hazardous events.
- Identifies safety Structures, Systems, and Components (SSC) and Specific Administrative Controls (SACs).

Following the selection of the Design Basis Accidents (DBAs), analyses are performed to evaluate these accidents to determine their effect on the offsite public and to identify and assess the adequacy of Safety Class (SC) and Safety Significant (SS) SSCs, and SACs, as appropriate.

This chapter includes the results of hazard identification, hazard categorization, hazard evaluation, accident analysis, and functional classification. Items discussed include the following:

- Methodology for hazard analysis and accident analysis.
- Identification of hazardous energy sources and HAZMAT sources.
- Radiological and chemical inventories.
- Facility Hazard Categorization.
- Initial Conditions (ICs).

- Risk binning evaluation of identified hazardous events based on a qualitative or semi-quantitative assessment of consequences and frequency.
- Summary of design and operational preventive and mitigative controls.
- Identification of planned design and operational safety improvements.
- Summary of controls, including identification of SC/SS SSCs and SACs, and other items needing Technical Safety Requirement (TSR) coverage to protect the validity of assumptions and controls credited in the accident analysis.
- Summary of significant worker safety features, including identification of SS SSCs and SACs, and any relevant TSR Administrative Controls (ACs).
- Identification of a limited set of unique and representative hazardous events, designated DBAs, to be analyzed further when required.
- Analysis of DBAs, when required.
- Evaluation and analysis of Beyond Design Basis Accidents (BDBAs), when required.
- Comparison of consequences to offsite evaluation guidelines and onsite evaluation criteria.

The primary purpose of the analysis is to demonstrate that the WIPP facility can be operated without undue risk to onsite or offsite individuals or to the environment. The information contained within this chapter supports the conclusion that WIPP can be operated safely in conjunction with the controls described elsewhere in the DSA.

A comprehensive revision to the WIPP hazard evaluation was performed following an Underground (UG) fire and subsequent independent radiological release event that occurred in February 2014. The radiological release event involved a CH Waste Container over-pressurization with container breach that occurred as a result of a chemical reaction in a WIPP Waste Acceptance Criteria (WAC) noncompliant drum that was received at WIPP and stored in the UG.

3.2 Requirements

The standards, regulations, and DOE Orders used to develop this DSA are listed below. Only portions of the listed documents are relevant to the development of this DSA; namely, those that cover hazard identification and hazard evaluation, safety analysis, risk classification, and operational controls.

- 10 CFR 830, “Nuclear Safety Management.” This rule governs the conduct of DOE contractors, DOE personnel, and other persons conducting activities (including providing items and services) that affect, or may affect, the safety of DOE nuclear facilities. This rule specifies the DSA requirements for nuclear facilities.
- DOE Order 420.1C, *Facility Safety*. This order addresses operational controls dealing with NPH mitigation, fire protection, general design criteria, and criticality safety.
- DOE-STD-3009-2014, *Preparation of Nonreactor Nuclear Facility Documented Safety Analyses*. This standard addresses hazard identification / hazard evaluation and safety analysis by providing guidance on the analysis techniques, level of detail, and criteria.
- DOE-STD-1020-2002, *Natural Phenomena Hazards Design and Evaluation Criteria for Department of Energy Facilities*. This standard provides criteria for design of new SSCs and for

evaluation, modification, or upgrade of existing SSCs so that DOE facilities safely withstand the effects of NPHs such as earthquakes, extreme winds, and flooding.

- DOE-STD-1020-2012, *Natural Phenomena Hazards Analysis and Design Criteria for DOE Facilities*. This standard provides criteria and guidance for the analysis and design of facility SSCs that are necessary to implement the requirements of DOE Order 420.1C, *Facility Safety*, and to ensure that the SSCs will be able to effectively perform their intended safety functions under the effects of NPHs.
- DOE-STD-1027-92, *Hazard Categorization and Accident Analysis Techniques for Compliance with DOE Order 5480.23, Nuclear Safety Analysis Reports*. This standard provides a uniform method for facility Hazard Categorization and insight into the graded approach for DSA development, especially in hazard analysis and accident analysis techniques.
- DOE-STD-1186-2004, *Specific Administrative Controls*. This standard provides guidance applicable to ACs that are selected to provide preventive and/or mitigative functions for specific accident scenarios that also have safety importance equivalent to engineered controls that would be classified as SC or SS if the engineered controls were available and selected.
- DOE-STD-3014-96, 2006, *Accident Analysis for Aircraft Crash into Hazardous Facilities*. This standard establishes an approach for performing a conservative analysis of the risk posed by a release of hazardous radioactive or chemical material resulting from an aircraft crash into a facility containing significant quantities of such material.
- DOE-STD-5506-2007, *Preparation of Safety Basis Documents for Transuranic (TRU) Waste Facilities*. This standard provides analytical assumptions and methods, as well as hazard controls to be used when developing safety basis documents for TRU Waste facilities in the DOE complex. It also provides supplemental technical information that is specific to TRU Waste operations, so that contractors can formulate, implement, and maintain safety bases for TRU Waste operations in a consistent manner that is compliant with 10 CFR 830, Subpart B, "Safety Basis Requirements."
- DOE Guide 421.1-2, *Implementation Guide for Use in Developing Documented Safety Analyses to Meet Subpart B of 10 CFR 830*. This guide provides guidance in meeting the provisions for DSA defined in Subpart B of 10 CFR 830. The guidance describes the analytical methods, documentation requirements, and safety commitments that go into the development of a comprehensive safety basis and DSA.
- DOE Guide 423.1-1B, *Implementation Guide for Use in Developing Technical Safety Requirements*. This guide provides guidance in identifying important safety parameters and developing the content for the TSRs that are required by 10 CFR 830.205, "Technical Safety Requirements."
- 30 CFR 57, Subpart R, "Safety and Health Standards – Underground Metal and Nonmetal Mines." Part 57 sets forth mandatory safety and health standards for each UG metal or nonmetal mine, including related surface operations, subject to the *Federal Mine Safety and Health Act of 1977*. The purpose of these standards is the protection of life, the promotion of health and safety, and the prevention of accidents.

Design codes, building standards, requirements, and regulations are discussed in Chapter 2.0, "Facility Description."

3.3 Hazard Analysis

This section describes the hazard analysis performed for the WIPP facility.

The hazard analysis is the initial evaluation effort and systematically presents an analysis of potential process-related, NPH, and external hazards that can affect the public, site workers, and the environment. This analysis considers the potential for both equipment failure and human error.

The hazard analysis is divided into the following two parts:

- Hazard identification (Section 3.3.1.1) of the potential hazards associated with WIPP Waste Handling operations.
- Hazard evaluation (Section 3.3.1.2) for the WIPP Waste Handling processes.

A brief overview of the process used to complete the hazard analysis follows.

3.3.1 Methodology

The hazard analysis provides a thorough, predominantly qualitative evaluation of the spectrum of risks to the public, site workers, and the environment due to accidents involving the identified hazards. It consists of two basic analytical activities: hazard identification, including Hazard Categorization and hazard evaluation.

DOE-STD-3009-2014, requires that the hazard analysis comprehensively identify hazards; screen for potential standard industrial hazards; identify potential events, event initiators, and dominant scenarios and estimate their frequencies and consequences; identify preventive and mitigative controls; estimate mitigated frequencies and consequences; and present the results in a risk matrix. Estimates of consequences and frequencies are performed in the hazard analysis such that attention is focused on those scenarios that are of greatest concern (i.e., highest risk).

3.3.1.1 Hazard Identification

Hazard identification is a comprehensive, systematic process by which known hazards (HAZMAT and energy) associated with the WIPP facility are identified, recorded, and screened by a team of individuals. Hazards were primarily identified through the development of lists of known hazardous energy and material sources and identifying hazardous locations. Information for identifying hazards and determining their applicability to the WIPP facility was obtained, as applicable, from the following sources:

- Existing project, safety, and environmental documents.
- Design drawings and reviews.
- Test plans and studies.
- Process walkdowns and equipment data.
- Consultations with facility, system, and process experts.

Hazard identification is divided into the following three steps:

1. Division of the facility into facility “sections” (Section 3.3.1.1.1).

2. Information gathering to identify hazards (Section 3.3.1.1.2).
3. Screening for standard industrial hazards (Section 3.3.1.1.3).

3.3.1.1.1 Division of Facility into Facility Sections

For the purposes of hazard identification and hazard evaluation, the WIPP TRU Waste Handling process was addressed in facility sections based on Waste Handling areas and the activities performed in those areas. The four facility sections are as follows:

External (EXT)	This section includes the WIPP property outside the Property Protection Area (PPA) fence.
Outside Area (OA)	This section is the aboveground area external to the Waste Handling Building (WHB) within the PPA fence, and includes the waste onsite transportation route from the security entry gate to the WHB Parking Area Unit on the south side of the WHB. Two transport routes from the security gate to the WHB Parking Area Unit are included: one that accesses the parking area from the east side of the WHB and one from the west side of the WHB.
WHB	This section includes the CH Bay, the three airlocks on the south side of the CH Bay, Room 108, the Conveyance Loading Room (CLR), Waste Shaft Collar Room at the Waste Shaft Collar, and the Waste Hoist Tower. Also included in this section are the RH Bay, the Hot Cell Complex (Cask Unloading Room (CUR) and Transfer Cell), and the Facility Cask Loading Room (FCLR).
UG	This section includes all areas below the ground level including the Waste Shaft, Waste Shaft Station, Transport Path, disposal panels, north end, disposal room(s), and north experimental areas. The UG section also includes structures and equipment associated with the Salt Handling Shaft, the Air Intake Shaft, and the Exhaust Shaft. The Underground Ventilation System (UVS), Interim Ventilation System (IVS), and Supplemental Ventilation System (SVS) operations and their associated Air Intake and Exhaust Shafts are also considered as part of the UG section.

3.3.1.1.2 Facility Information Gathering

During March 2010, a comprehensive hazard identification process was conducted to identify, record, and screen hazards at the WIPP facility to identify the HAZMAT and energy sources present in the facility or operations. The hazard identification process and results were documented in WIPP-007, *Hazard Identification Summary Report for WIPP and Carlsbad, NM Operations*). Updates to this document were performed in April 2012 and November 2015.

A standardized list of hazards consistent with DOE-STD-5506-2007 hazard source and material groups was used during the hazard identification walkdowns to provide a uniform approach for identification of the hazards. Hazard identification methodology assigns a unique item number for each hazard, the hazard

energy source or material, whether the hazard exists in the specific structure or facility section, a description as necessary to characterize the hazard, and a screening to identify whether the hazard may be considered a standard industrial hazard.

An integrated team of site personnel representative of applicable programs and with knowledge of facility areas and operations was selected to perform the walkdowns. The WIPP Nuclear Safety organization facilitated the walkdowns and consolidated input from walkdown participants.

New and additional hazards associated with the UG fire and radiological release events that occurred in February 2014 and subsequent UG recovery activities and processes were considered and evaluated as documented in a series of Evaluations of the Safety of the Situation. This information was used to identify additional hazards for consideration including UG radiological contamination, ventilation system changes and limitations, WIPP WAC noncompliant drums in storage, new and revised UG facilities and processes, replacement and modified UG vehicles/equipment, and UG design changes and improvements.

The results of the hazard identification process are presented in Section 3.3.2.1.

3.3.1.1.3 Screening of Common Hazards

The third step in the hazard identification process was the screening of standard industrial hazards. These are defined as hazards that are routinely encountered in general industry and construction, and for which a national consensus code and/or standard (e.g., Occupational Safety and Health Administration (OSHA) and transportation safety regulation) defines and regulates appropriate worker safety practices. These workplace hazards are addressed by provisions of 10 CFR 851, “Worker Safety and Health Program,” which requires identification and assessment of worker hazards and compliance with safety and health standards that provide specific safe practices and controls. In accordance with DOE-STD-3009-2014, standard industrial hazards were not included in this safety analysis (i.e., screened out). Some standard industrial hazards were identified as initiators and contributors to events resulting in radiological releases. The following characteristics were used to determine hazards that are standard industrial hazards:

- The hazard is controlled by OSHA regulations under 10 CFR 851, Mine Safety and Health Administration regulations under 30 CFR 57, or one or more national consensus standards implemented at WIPP (e.g., American Society of Mechanical Engineers, American National Standards Institute, National Fire Protection Association (NFPA), and Institute of Electrical and Electronics Engineers), where these standards define safety requirements, unless in quantities or situations that initiate events with serious radiological impact to the public, workers, or environment.
- Hazards such as noise, electricity, flammable materials, welding operations, small quantities of chemicals that would likely be found in homes or general retail outlets, and HAZMAT transported on the open road in U.S. Department of Transportation (DOT) specification containers are considered to be common hazards encountered in everyday life.

Such hazards are formally and systematically treated by the following programmatic elements:

- WIPP implementation of the DOE Integrated Safety Management System (ISMS), whose primary goal is to “Do Work Safely.” Industrial safety is an integral component of the ISMS and involves detection, mitigation, management, and prevention of workplace hazards to protect against accidental death, injury, property damage, or interruption of production (WIPP ISMS procedure).

- WIPP Industrial Safety Program defines basic sitewide industrial safety policies and minimum requirements. This program is augmented by detailed rules and procedures developed by departments and facilities for activities within their areas of responsibility for industrial safety.

Unique hazards may be present that are not specifically addressed by the above exclusion criteria, either because of quantities larger than typically used in general industry or because of unique DOE applications or operations. Such hazards may represent a potential hazard to an entire work area affecting multiple workers, or have the ability to affect safe operation, are not treated as standard industrial hazards and are evaluated in the DSA.

In accordance with DOE-STD-3009-2014, the DSA is not intended to deal extensively with chemicals that can be safely handled by implementation of a HAZMAT protection program. A screening process is established to select for DSA evaluation only those chemicals of concern (i.e., type and quantity that have the potential for significant health effect on the facility worker, co-located worker, or public) that are present in the facility or activity and present hazard potentials outside the routine scope of the HAZMAT protection program. Chemicals that could otherwise be screened out, but have the potential to be an accident initiator involving radioactive or HAZMAT releases, or could compromise the ability of the facility operators to safely manage the facility, are retained as part of the DSA hazard evaluation.

Examples of chemicals that may be excluded from the DSA hazard evaluation include:

- Chemicals with no known or suspected toxic properties. This exclusion may be claimed when a chemical is not listed in OSHA or U.S. Environmental Protection Agency (EPA) toxic chemical regulations or is not assigned a Protective Action Criteria (PAC) 2 or 3 value on the website of the Subcommittee on Consequence Assessment and Protective Actions (SCAPA).
- Materials that have a health hazard rating of 0 or 1, based on NFPA 704, *Standard System for the Identification of the Hazards of Materials for Emergency Response*, or equivalent ratings from Global Harmonization System of Classification and Labeling of Chemicals.
- Materials that are commonly available and used by the general public, including any substance to the extent it is used for personal, family, or household purposes and that is present in the same form, quantity, and concentration as a product distributed for use by the general public (e.g., bleach, motor oil).
- Small-scale use quantities of chemicals similar to the intent of 29 CFR 1910.1450, “Occupational Exposure to Hazardous Chemicals in Laboratories” (i.e., containers that are designed to be easily and safely manipulated by one person). A general guideline, as described in DOE Guide 151.1-2, *Technical Planning Basis*, is individual containers with capacities less than approximately 5 gallons (19 liters) for liquids with densities near that of water, 40 pounds (18 kg) for solids (or heavy liquids), or 10 pounds (4.5 kg) for compressed gases, that are handled under the provisions of an identified Safety Management Program (SMP) such as the HAZMAT protection program.

Screening of the WIPP chemical inventory was performed in accordance with WP 12-RP.01, Revision 7, *Waste Isolation Pilot Plant Emergency Planning Hazards Survey*, which applied the guidance of DOE Guide 151.1-2 and was subsequently reviewed against DOE-STD-3009-2014, Section A.2 Chemical Hazards criteria. All items in the purchased chemical inventory meet at least one of the DOE Guide 151.1-2 criteria in DOE/WIPP-08-3378, *Waste Isolation Pilot Plant Emergency Planning Hazards Assessment (EPHA)*. Using the criteria of DOE-STD-3009-2014 Section A.2, the chemicals in the WIPP Chemical Inventory that do not screen out would still not result in a release that would exceed the PAC-1 for Maximally Exposed Offsite Individual (MOI) or PAC-2 for the co-located worker

consequence thresholds. Bulk chemicals used onsite are stored away from radiological material and cannot contribute to the release of radiological material.

Of the chemical constituents associated with the EPA Hazardous Waste Numbers that may be present in the TRU Mixed Waste per the *Waste Isolation Pilot Plant Hazardous Waste Facility Permit* (HWFP) and polychlorinated biphenyls (PCBs) per the EPA PCB Conditions of Approval (EPA 2011), only beryllium powder did not screen out as there are multiple TRU Waste Containers that contain beryllium in a solid form. The bulk of beryllium material in the TRU Waste is in solid form (i.e., not powder) and would not be dispersible due to an insult of a TRU Waste Container. Since the predominant and most probable hazard in TRU Waste is radioactive material, any release of beryllium would be coincident with a release of radioactive material. The chemical hazard consequences due to the release of any material intermixed with TRU Waste and released simultaneously due to an insult of a TRU Waste Container are less than the radiological consequences of the same event; therefore, the controls derived for the radiological event are considered to prevent/mitigate any chemical release. The WIPP WAC identifies the permissible constituency of TRU Waste Container contents with the intent to ensure that incompatible mixtures are not allowed (in addition to vented substantial containers), thereby preventing internal container fires and deflagrations.

DOE-STD-5506-2007 further describes standard industrial hazard types that are common to TRU Waste Operations, including radiography equipment that is governed by American National Standard Institute standards and heavy equipment hazards regulated by OSHA.

3.3.1.2 Hazard Evaluation

The hazard evaluation begins following the comprehensive identification of all known HAZMAT and energy sources. The hazard evaluation is performed to meet the requirements of DOE-STD-3009-2014, consistent with DOE-STD-5506-2007.

The hazard evaluation provides a comprehensive assessment of facility hazards and focuses attention on those events that pose the greatest risk to the public and the workers. Event categorization, identification of event cause(s), assignment of event frequency and unmitigated consequence level, and identification of potential mitigative and preventive features are tasks performed during the hazard evaluation process. Dose analysis for co-located workers at 100 meters uses the methodology described in Section 3.4.

3.3.1.2.1 Selection of Hazard Evaluation Method

The example flowchart in Figure 5.3 of *Guidelines for Hazard Evaluation Procedures* (CCPS 1992) provides a method for selecting a specific hazard evaluation technique. Using this flowchart, the technique is selected with the following criteria:

- The hazard evaluation study is for regulatory purposes.
- No specific hazard evaluation method is required.
- This is not a recurrent review.
- Expected results are a list of specific accident situations plus safety improvement alternatives.
- The results are not part of a quantitative risk assessment.
- The process is operating.

- Human errors are a concern.
- Accidents are most likely to be single failure events.

At this point in the decision process, the methods presented are the what-if, the what-if/checklist, the preliminary hazard analysis, and the Hazard and Operability Analysis (HAZOP) methods.

The WIPP hazard evaluation used an approach that encompassed several methods to evaluate the hazard identification tables that included what-if, preliminary hazard analysis, and HAZOP methods. This combination of methods was selected based on its widespread use and DOE acceptance at other TRU Waste Handling/storage facilities in the DOE complex.

3.3.1.2.2 Scope of the Hazard Evaluation

The hazard evaluation process consists of the unmitigated hazard evaluation and the mitigated hazard evaluation. The scope of the hazard evaluation includes the following:

- All aspects of the WIPP TRU Waste Handling process throughout the four facility sections described in Section 3.3.1.1.1.
- NPH (e.g., earthquakes, lightning, tornadoes, snow/hail buildup, and high wind impacts), external events (e.g., aircraft and vehicular impacts), and nuclear criticality.
- Consideration of the entire spectrum of possible events for a given hazard in terms of both frequency and consequence levels (e.g., from a small localized fire to a large propagated facility-wide fire).
- Hazards addressed by other programs and regulations (e.g., Process Safety Management, OSHA, *Resource Conservation and Recovery Act of 1976* (RCRA) (42 USC 6901 et seq.), DOT, and the EPA) if they act as initiators or contributors to accidents or result from chemical or radiological hazards.

The scope of the hazard evaluation does not include the following:

- Hazards screened as standard industrial hazards.
- Willful acts, such as sabotage.

The hazard evaluation process is divided into two steps:

1. Identification of ICs (Section 3.3.1.2.3).
2. Evaluation of hazards (Section 3.3.1.2.4).

3.3.1.2.3 Initial Conditions

Before beginning the evaluation, the ICs for the WIPP facility were postulated. ICs are specific assumptions regarding the facility and its operations that are used in defining accident scenarios. The ICs identified relate to facility specific passive features (i.e., no active mechanical or human involvement) such as the facility construction and to assumptions made regarding Waste Container types and configurations, inventory restrictions, facility configuration commitments, WIPP WAC compliance requirements, and operational process specific commitments.

ICs are part of the input to the control selection process and may require protection as TSRs such as limiting conditions for operation (LCOs), SACs, or design features (DFs). Therefore, care must be taken regarding the selection of ICs in determining the impacts they will have on the hazard evaluation. ICs other than those that are part of the facility design basis or that will obviously prevent an event (e.g., structure able to withstand vehicle impact), are discouraged from being used since they may skew the unmitigated risk levels and result in unanalyzed or inadequately controlled hazards.

ICs identified for the WIPP facility are provided in Section 3.3.2.3. The identified ICs are used to support identification of specific conditions or features that require TSR protection and to provide the basis for the requirement(s).

3.3.1.2.4 Hazard Evaluation Process

The hazard evaluation is first performed in an unmitigated manner to determine the risks (frequencies and consequences) involved with the facility and its associated operations without regard for any safety controls or programs. Unmitigated refers to the determination of the frequency and consequences without credit given for preventive or mitigative features other than the specified ICs. During the hazard evaluation, the material at risk (MAR) is equal to the available hazardous inventory that can be acted upon during the postulated event. No credit is taken for any controls; however, the laws of physics are applied.

The WIPP hazard evaluation was developed in two parts. The first part involved a hazard analysis of the processes associated with the WIPP facility using a combination of the what-if and HAZOP methodologies. From this analysis, several hundred hazardous events were postulated. Each was given a unique numeric identifier, an assigned MAR, an event description, and a list of candidate causes. Using the methodology outlined in DOE-STD-5506-2007, the event was assigned an unmitigated frequency level and consequence level. The unmitigated frequency and consequence levels were then compared to the risk-ranking chart in DOE-STD-3009-2014 to determine the events Risk Class (I, II, III, or IV).

The hazardous events are grouped into like events using the minimum set of events in DOE-STD-5506-2007 as a guide. The hazardous event with the highest risk ranking from each event bin is selected as the representative event for the event grouping and as the hazard evaluation event scenario. The other events are retained as represented events in the event grouping. The representative event is then evaluated, controls identified, and controls selected for Risk Class I and II events. The controls are then evaluated for completeness by evaluating their effectiveness to reduce the likelihood or consequences of any represented events in the event grouping that also have an unacceptable Risk Class or a public high consequence level. If the controls are determined to be inadequate to reduce the risk of the represented events, additional controls are selected to reduce the Risk Class of the events to an acceptable level. Operational events that are evaluated to be Beyond Extremely Unlikely with High consequences to the facility worker or co-located worker are considered for determination of the need for controls warranting safety classification.

The hazard analysis and hazard evaluation events have been collected and organized into the *Hazards Analysis for the Waste Isolation Pilot Plant Transuranic Waste Handling Safety Basis* (WIPP-021) that represents both the CH and RH Waste Handling processes as well as the four facility sections. For each of the hazard evaluation events in WIPP-021, the following are included:

- Event number.
- Event category.

- Event location(s).
- MAR.
- Release mechanism.
- Event description.
- Unmitigated frequency and consequence levels and associated Risk Classes.
- ICs and assumptions.
- Preventive features.
- Mitigative features.
- Mitigated frequency and consequence levels and associated Risk Classes.
- Notes.

Controls may be listed in the tables under ICs, initial assumptions, preventive features, and/or mitigative features. A control name may be followed by one or more listed attributes of that control. Attributes listed in normal text are not credited for risk reduction. Attributes that are denoted in **bold** text are credited for risk reduction. For each event additional discussion of the credited controls/attributes is provided.

Additional detail and pertinent methodology information regarding each of the hazard evaluation table events are provided in the following sections.

Event Number

The hazard evaluation was organized by events categorized in DOE-STD-5506-2007. The analysis used the analytical assumptions and methods prescribed in this standard for preparation of TRU Waste safety basis documents. In the hazard evaluation table, events are identified by a unique alphanumeric designator. Each event number starts with an alpha indicator identifying the type of waste being processed (CH, RH, or both (CH/RH) or not applicable (NA) [not specifically related to CH or RH Waste]). The second alpha indicator is the process area (EXT, OA, WHB, or UG) where the event is postulated to occur, followed by a number, which indicates the event category (1, 2, 3 … 30). Each event category may have one or more events within it to ensure that the DSA analyzes the complete suite of events and unique controls that are representative of the various initiators and consequence levels.

The final sequence of numbers (001, 002, etc.) identify group related events. An alpha indicator (b, c, etc.) indicates actual events within an event grouping that are represented by a representative event description (always an “a” indicator). For instance, event CH-UG-1-001a is a fuel-pool fire involving CH Waste in the UG. Two fuel-pool fire events were identified in this sequence (CH-UG-1-001a and CH-UG-1-001b) with CH-UG-1-001a being representative of event CH-UG-1-001b. The hazard evaluation table lists all of the events analyzed in the hazard evaluation. In the event that an original representative event (e.g., -001a for a fire in the UG) was split into multiple representative events (e.g., -001a1 for fire at Waste Face, -001a2 for fire in Vehicle Exclusion Zone (VEZ), -001a3 for fire at Waste Shaft Station), the additional numeric character was added. This allows reference back to the original event numbering scheme while allowing for further refinement of the hazard evaluation.

Event categories 1 through 25 correlate to the minimum set of events identified in DOE-STD-5506-2007 that are shown in Table 3.3-1. Event categories 26 to 30 are used for categorization of external or internal flooding, landslide of soil overburden or salt pile impacts to Waste Containers, loss of power, loss of ventilation, and UG roof fall. Three of these event categories (26, 28, and 29) are not unique to WIPP and

may have internal, external, and/or NPH initiators. Although event category 27 was used in prior revisions of the DSA, there are no events associated with this category and therefore, this category is reserved. The final event category (30, UG roof fall) is also unique to WIPP and is initiated by the NPH associated with the nature of the UG.

Table 3.3-1. Event Types

Fire Events (E-1)	
(Event 01)	Fuel Pool Fire
(Event 02)	Small Fire
(Event 03)	Enclosure Fire
(Event 04)	Large Fire
Explosion Events (E-2)	
(Event 05)	Ignition of Fumes Results in an Deflagration/Detonation (external to container)
(Event 06)	Waste Container Deflagration
(Event 07)	Multiple Waste Container Deflagration
(Event 08)	Enclosure Deflagration
Loss of Confinement/Containment (E-3)	
(Event 09)	Vehicle/Equipment Impacts Waste/Waste Containers
(Event 10)	Drop/Impact/Spill Due to Improperly Handled Container, etc.
(Event 11)	Collapse of Stacked Containers
(Event 12)	Waste Container Over-Pressurization
Direct Exposure Events (E-4)	
(Event 13)	Direct Exposure to Radiation Events
Criticality Events (E-5)	
(Event 14)	Criticality Events
Externally Initiated Events (E-6)	
(Event 15)	Aircraft Impact with Fire
(Event 16)	External Vehicle Accident
(Event 17)	External Vehicle Accident with Fire (Combustible or Pool)
(Event 18)	External Explosion
(Event 19)	External Fire
NPH Initiated Events (E-7)	
(Event 20)	Lightning
(Event 21)	High Wind
(Event 22)	Tornado
(Event 23)	Snow/Ice/Volcanic Ash Build-up
(Event 24)	Seismic Event (Impact Only)
(Event 25)	Seismic Event with Fire

Additional WIPP Event Types (E-8)	
(Event 26)	Flooding
(Event 27)	Reserved
(Event 28)	Loss of Power
(Event 29)	Loss of Ventilation
(Event 30)	UG Roof Fall

Events with regard to two event types from DOE-STD-5506-2007 were not included in the hazard evaluation table. The event types are as follows:

- Explosion DOE-STD-5506-2007 Event 7 (Multiple Waste Container Deflagration).
- Explosion DOE-STD-5506-2007 Event 8 (Enclosure Deflagration).

A container deflagration in an enclosure is not included separately from other Waste Container deflagrations (DOE-STD-5506-2007 Event 6) but is bounded by the analyzed deflagration events in other locations. Although the Upper Hot Cell is an enclosure, it is not used to segment Waste Containers because they have higher potential for internal deflagration. The Hot Cell is used to protect the immediate worker from a radiation exposure during the overpacking of RH drums. An internal container deflagration has the same potential of occurring in the Hot Cell as it does in any other part of the WIPP facility. Therefore, specific events for DOE-STD-5506-2007 Event Types 7 and 8 do not need to be included in the hazard evaluation table.

Event Description

The hazard evaluation table includes a brief description of a postulated hazard evaluation event. The event description includes a hazardous condition being postulated, general location of the event, the release mechanism (e.g., fire, pressurized release, spill) or other consequence mechanism (e.g., direct exposure), and the affected HAZMAT, including the MAR that may be affected by the event. Using the hazard analysis table as a basis, hazard evaluation event scenarios were developed wherever a potential exists for a release of hazardous energy and/or material.

Frequency

Event frequency evaluation is a qualitative or semi-quantitative process that involves assigning a frequency level to each event in the hazard evaluation table. Table 3.3-2 identifies the frequency levels and qualitative description of frequencies to be assigned in the hazard evaluation process, based on guidance given in DOE-STD-3009-2014. The additional frequency considerations and guidance of DOE-STD-5506-2007 were also taken into consideration when assigning event frequencies. The appropriate unmitigated frequency level for a particular event is determined based on the combination of the identified ICs, the event’s cause(s), and the likelihood for the event cause to result in a release and/or hazardous conditions. Sources of frequency information include generic initiator frequencies, existing safety documentation, engineering calculations, failure rate data, facility expert opinion, and historical accident data.

Table 3.3-2. Frequency Levels

Frequency Level	Frequency	Qualitative Description
Anticipated (A)	$f > 10^{-2}$/year	Events that might occur several times during the lifetime of the facility (Incidents that commonly occur)
Unlikely (U)	$10^{-2} > f > 10^{-4}$/year	Events not anticipated to occur during the lifetime of the facility
Extremely Unlikely (EU)	$10^{-4} > f > 10^{-6}$/year	Events that will probably not occur during the lifetime of the facility
Beyond Extremely Unlikely (BEU)	$f < 10^{-6}$/year	All other events

f = frequency

Conservative values are assessed to accommodate uncertainties in frequency levels (Anticipated (A); Unlikely (U); Extremely Unlikely (EU); and Beyond Extremely Unlikely (BEU)). This practice is particularly important when an event frequency is just below the next highest frequency level. For example, 9.7×10^{-3} /year is at the high end of the Unlikely frequency level. Considering the sources, methods, and uncertainty associated with this value, this event may be considered to have a frequency level of Anticipated rather than Unlikely. Frequencies in the hazard evaluation table were estimated using DOE-STD-3009-2014, DOE-STD-5506-2007, and engineering judgment.

For evaluation of pool fires, the unmitigated frequency of events involving pool formation independent of an impact (e.g., spills, leads) are assumed to be Anticipated. For pool fires involving an impact (e.g., vehicle collisions), the unmitigated frequency is assumed to be Unlikely.

Consequence Levels

Consequences are evaluated at the following receptor locations to assess health effects associated with the postulated event.

Facility Worker — Workers in the immediate area of the hazard and those workers in the same area who may not be aware of the hazardous condition. Consequences to the worker are estimated qualitatively. All workers in the UG are defined as facility workers for UG events.

Onsite Co-located Worker — Individuals outside the structure or immediate area of the hazard but within the site boundary. For evaluation purposes, these workers are located outside the last possible barrier from the hazard and at the worst possible location. Consequences are estimated semi-quantitatively for the receptor at a distance of 100 meters from the release. For UG events, co-located workers are considered to be on the surface. UG event consequences are assessed at 100 meters from the exhaust stack.

Maximally Exposed Offsite Individual (MOI) — Members of the general public (MOI), DOE personnel, and DOE contractor personnel outside the site boundary. Consequences are estimated quantitatively for the receptor at a distance of approximately 2.9 kilometers from the release.

Radiological and chemical consequence level criteria for the MOI, co-located worker, and facility worker are given in Table 3.3-3 as taken from DOE-STD-3009-2014, Table 1, "Consequence Thresholds."

The MOI and co-located worker consequences are determined quantitatively or semi-quantitatively as described in Section 3.4. The calculated or estimated Total Effective Dose (TED) incurred by the receptor of interest is compared to the values in Table 3.3-3. The TED is based on integrated committed dose to all target organs, accounting for direct exposures as well as a 50-yr commitment. The dose pathways considered are inhalation, direct shine, and ground shine. The TED does not include the ingestion 50-year committed effective dose from consumption of contaminated water and foodstuffs.

Table 3.3-3. Consequence Levels

Consequence Level	MOI [a,d]	Co-Located Worker [b,d]	Facility Worker [c]
High	≥ 25 rem TED or ≥ PAC[e]-2	≥ 100 rem TED or ≥ PAC-3	Prompt death, serious injury, or significant radiological and chemical exposure
Moderate	≥ 5 rem TED or ≥ PAC-1	≥ 25 rem TED or ≥ PAC-2	No distinguishable threshold
Low	< 5 rem TED or < PAC-1	< 25 rem TED or < PAC-2	No distinguishable threshold

TED = total effective dose equivalent

a Maximally Exposed Offsite Individual (MOI) – A hypothetical individual defined to allow dose or dosage comparison with numerical criteria for the public. This individual is an adult typically located at the point of maximum exposure on the DOE site boundary nearest to the facility in question (ground level release), or may be located at some farther distance where an elevated or buoyant radioactive plume is expected to cause the highest exposure (airborne release) – see Section 3.4.1.6. The MOI used here is not the same as the Maximally Exposed Individual or the Representative Person used in DOE Order 458.1 for demonstrating compliance with DOE public dose limits and constraints.

b A co-located worker at a distance of 100 meters from a facility (building perimeter).

c A worker within the facility boundary and located less than 100 meters from the release point.

d Although quantitative thresholds are provided for the MOI and co-located worker consequences, the consequences may be estimated using qualitative and/or semi-quantitative techniques.

e DOE PACs are defined by Advanced Technologies and Laboratories International, Inc. in "Protective Action Criteria (PAC): Chemicals with AEGLs, ERPGs, & TEELs," Rev 27, February 2012. This is available at: http://www.atlintl.com/DOE/teels/teel.html. [Note: AEGL = Acute Exposure Guideline Levels; ERPGs = Emergency Response Planning Guidelines; TEELs = Temporary Emergency Exposure Limits]

The facility worker consequence levels were qualitatively assessed as either a high consequence level or a low consequence level. High consequence levels are qualitatively established for facility workers consistent with DOE-STD-3009-2014, guidelines for a significant worker consequence. When the analyzed hazard evaluation event is elevated as potentially resulting in a significant consequence incurred by the facility worker, the facility worker is assigned a high consequence level for the event. Otherwise, facility worker is assigned a low consequence level for the event. The facility worker consequences are based on a combination of the following:

- The magnitude, type, and form of radioactive and non-radioactive HAZMAT involved in a hazard scenario.
- The type and magnitude of energy sources involved in a hazard scenario.

- Characteristics of the hazard scenario such as duration and the location where it may occur (e.g., in unmanned areas such as tank vaults).
- The potential for a hazard to impact workers' mobility or ability to react to hazardous conditions.

The potential effect on the mobility or ability of the facility worker to react to a hazardous condition is not used as the sole or primary basis for determining facility worker effects. For example, in the UG a facility worker may not be aware that an event has occurred. A control regarding an Attendant has been instituted to ensure observation of the event at its location, and notification of UG personnel via communication with the Central Monitoring Room (CMR) and other UG communication systems to minimize UG facility worker consequences. Aboveground however, the CH Bay, Room 108, RH Bay, Hot Cell Complex, and Waste Hoist Tower are generally open areas with multiple egress points that permit facility workers to observe conditions and promptly evacuate the area.

DOE-STD-5506-2007 requires analysis of events due to hydrogen or other flammable/explosive gases in a suspect container. A suspect container is then defined as unvented (including those containers with inadequate vents, no vent, or plugged vents) and meeting *at least one* of the following criteria:

1. Obvious indications of pressurization.
2. Waste stream characteristics indicate a potential for generating concentrations of hydrogen or other flammable gas mixtures greater than or equal to the lower flammability limit.
3. Waste stream data is either inadequate or unavailable to rule out the potential for generating concentrations of hydrogen or other flammable gas mixtures greater than or equal to the lower flammability limit.

Non-suspect WIPP WAC compliant containers are assumed to not result in spontaneous events (i.e., deflagration with lid ejection) that would result in facility worker prompt death, serious injury, or significant radiological or chemical injury.

Operational events resulting in high or moderate offsite radiological consequence to the MOI are moved forward into accident analysis (Section 3.4) for determination of SC controls.

Risk Ranking

The risk ranking process bins the results of unmitigated hazard evaluation based on a combination of frequency and consequence (see Table 3.3-4). The objective of risk ranking is to focus attention on those events that pose the greatest risk to the MOI, onsite co-located workers, and facility workers. The qualitative ranking used the guidance provided in DOE-STD-3009-2014, Table A-1, *Qualitative Risk Ranking Bins*. Events with higher risk ranking (Risk Class I or Risk Class II) are analyzed for control selection evaluation.

Table 3.3-4. Risk Bins

Consequence Level	Frequency Level			
	BEU	EU	U	A
High	III	II	I	I
Moderate	IV	III	II	II
Low	IV	IV	III	III

I = Combination of conclusions from risk analysis that identify situations of major concern
II = Combination of conclusions from risk analysis that identify situations of concern
III = Combination of conclusions from risk analysis that identify situations of minor concern
IV = Combination of conclusions from risk analysis that identify situations of minimal concern

Events for the public with High consequence (includes Risk Bin I events) shall be protected with SC controls, and associated TSRs. Events of High consequence for the facility worker and/or co-located worker shall be protected with SS controls, and associated TSRs. The consideration of controls is based on the effectiveness and feasibility of the considered controls along with the identified features and layers of defense-in-depth.

Events for the public with Moderate consequence should be considered for protection with SC controls, and associated TSRs. The consideration of controls should be based on the effectiveness and feasibility of the considered controls along with the identified features and layers of defense-in-depth.

Risk Class III events are generally protected by defense-in-depth hazard controls or SMPs to reduce risk to Risk Class IV. Risk Class III events are generally addressed by SMPs or other ACs, however, they may need further evaluation of the need for SS controls for high consequence operational events judged to be Beyond Extremely Unlikely before crediting preventive controls. These events may also be considered for defense-in-depth SSCs in unique cases. Risk Class IV events do not require additional measures.

The hazard evaluation table in WIPP-021 provides identification of the selected controls and features that are credited to prevent or mitigate the consequences of each of the hazardous events that are Risk Bin I or Risk Bin II for any receptor. Unmitigated consequences identified in WIPP-021 are based on WIPP-001, *WIPP DSA Fire Event Accident Analysis Calculations*; WIPP-017, *Waste Isolation Pilot Plant (WIPP) Documented Safety Analysis (DSA) Loss of Confinement (LOC) Event Hazard Analysis (HA) and Accident Analysis (AA) Calculations*; WIPP-018, *Waste Isolation Pilot Plant (WIPP) Documented Safety Analysis (DSA) Explosion Event Hazard Analysis (HA) and Accident Analysis (AA) Calculations*; WIPP-019, *WIPP DSA External Event and Natural Hazard Phenomena (NHP) Event Hazard Analysis (HA) and Accident Analysis (AA) Calculations*; WIPP-051, *Scoping Calculations for MIN02-V.001 Waste for Closure of Panels 6 and 7*; and WIPP-054 *WIPP Dispersion Modeling Protocol*. Control selection was based upon the general principles stated in DOE-STD-3009-2014, Section 3.3, “Hazard Controls” for the hierarchy of controls. This hierarchy of controls gives preference to passive engineered safety features over active ones; engineered safety features over ACs or SACs; and preventive over mitigative controls. Controls were selected based upon the judged effectiveness and reliability of the selected control(s) to accomplish the defined safety function. Additional controls were added if the effectiveness or reliability of the selected control(s) was/were deemed inadequate to reduce the risk to an acceptable level.

Preventive Features

Identification of preventive features starts during the hazard identification phase and carries through to the end of the analysis. Preventive features are features expected to reduce the frequency of a hazardous event or eliminate the hazard or hazardous condition. The identification of such features is made without regard to any possible pedigree of the feature such as procurement level or current classification. These might include engineered features (SSCs, etc.), ACs (procedures, policies, programs, etc.), natural phenomena (ambient conditions, buoyancy, gravity, etc.), or inherent features (physical or chemical properties, location, elevation, etc.) operating individually or in combination. Preventive features are listed in the hazard evaluation table in such a manner that a distinction is made between ACs and active or passive engineered controls. Engineered preventive controls were assumed to reduce the frequency by one frequency bin each and administrative preventive controls were assumed to reduce the frequency by one-half frequency bin each unless otherwise noted.

Preventive features constitute a significant portion of defense-in-depth and worker safety and provide essential input to the control selection task. Therefore, the identification effort captures essentially all of the possible features that could be counted on to prevent a hazardous event.

The preventive features in the hazard evaluation table are a listing of some of the potential controls that the accident analysis and control selection process may later credit. Other than the ICs applied to each event, no preventive features listed in the hazard evaluation table were credited in the unmitigated hazard analysis frequency. These features represent a potential set of controls that could offer reduction in mitigated event frequency, but whose appropriateness must be demonstrated through the control selection process.

Mitigative Features

Identification of mitigative features starts during the hazard identification phase and carries through to the end of the analysis. Mitigative features are any features expected to reduce the consequences of a hazardous event. The identification of such features is made without regard to any possible pedigree of the feature such as procurement level or current classification. Mitigative features must be capable of withstanding the environment of the event. Mitigative features are listed in hazard evaluation table in such a manner that a distinction is made between ACs and active or passive engineered controls.

Mitigative features constitute a significant portion of defense-in-depth and worker safety and they provide essential input to the functional classification task. Therefore, the identification effort captures essentially all of the possible features that could be counted on to reduce the consequences of a hazardous event.

The mitigative features listed in the hazard evaluation table are a listing of the potential controls that the accident analysis and control selection process may later credit. These features represent a potential set of controls that could offer reduction in the mitigated event consequence, but whose appropriateness must be demonstrated through the control selection process.

The mitigated hazard evaluation and accident analysis were performed by first evaluating the hazard evaluation event (which is a hazard analysis event with the bounding risk ranking) for control selection. This evaluation focused on reducing the risk ranking by reducing the frequency and/or consequence level, or eliminating the hazard or hazardous condition. The controls were selected by first examining the applicability of the preferred and alternate controls listed in DOE-STD-5506-2007 for the event category. When these controls were not available or did not result in an acceptable risk ranking, additional controls were evaluated for the further reduction of frequency or consequence level. These controls were selected using the DOE-STD-3009-2014, methodology of SSC over AC and preventive over mitigative. The

applicability of the selected bounding scenario controls were then evaluated for applicability to the represented hazard analysis events associated with the hazard evaluation event. In cases where they were not applicable or had limited applicability, additional controls were selected in the same manner as the bounding hazard analysis event controls.

The controls selected in this process are listed along with the specific safety function of the control, the events for which that function is applicable, and the basis for the selection. Efforts are made to keep the identified set of controls to a minimum by focusing on controls that will be applicable to multiple events.

DOE-STD-3009-2014 defines key elements (KEs) to be identified under the SMPs as "…those that: (1) are specifically assumed to function for mitigated scenarios in the hazard evaluation, but not designated an SAC; or, (2) are not specifically assumed to function for mitigated scenarios, but are recognized by facility management as an important capability warranting special emphasis." The basis for selection as a KE is based on how the program element: "(1) manages or controls a hazard or hazardous condition evaluated in the hazard evaluation; (2) affects or interrupts accident progression as analyzed in the accident analysis; and (3) provides a broad-based capability affecting multiple scenarios." KEs are therefore tied specifically to managing or controlling hazardous conditions evaluated in the hazard evaluation. KEs are identified in the applicable DSA SMP chapters (i.e., Chapters 7.0 through 18.0).

3.3.1.2.5 Worker Evaluation

For hazard evaluation events with high worker (facility worker and co-located worker) consequences, controls are selected that will protect the worker receptors of concern. For hazard evaluation events with Moderate co-located worker consequences resulting in a Risk Bin II, controls are considered for selection that will protect the co-located worker. The controls are qualitatively evaluated for their effectiveness in protecting the worker.

3.3.1.2.6 Hazard Evaluation Output

The hazard evaluation table is the primary output of the hazard evaluation effort. The hazard evaluation table documents the controls selected to protect the worker (facility worker and/or co-located worker) and the MOI, as required, including the specific safety function provided by each control.

3.3.2 Hazard Analysis Results

3.3.2.1 Hazard Identification

The results of the hazard identification process completed for WIPP are documented in the WIPP-007. This section of the DSA focuses on the portion of WIPP-007 that pertains to the four WIPP facility sections evaluated in this DSA (EXT, OA, WHB, and UG).

A summary of the general category of hazards identified in these four WIPP facility sections as a result of the hazard identification process are provided in Table 3.3-5.

WIPP-007 documents the chemical and radiological source inventory walkdown, and provides a "snapshot" of the chemical inventory used for screening. The WIPP Industrial Safety database is used to track the site's chemical inventory with regard to quantity, form, and location information, and is updated quarterly. The radiological source inventory database is available through the Safety and Health department.

Table 3.3-5. Hazard Identification Summary

Hazard	Summary
Electrical	Electrical hazards are present throughout the Waste Handling areas. General electrical hazards include switchgear, transformers, transmission lines or cable runs, wiring, electrical equipment, motors, battery banks, light fixtures, and service outlets. Other electrical hazards that may be found in specific sections include portable generators, heaters, and power tools. Electrical hazards may be initiators for fire and explosion events.
Thermal	Thermal hazards occur in the facility sections and typically include electrical equipment, wiring, welding, and engine exhaust. Heaters may be found in specific facility sections. Thermal hazards may be initiators for fire and explosion events.
Pyrophoric material	The facility sections evaluated for the WIPP do not contain any known pyrophoric materials other than plutonium and uranium in the waste. CH and RH Waste containing pyrophoric materials, > 1% by weight, are prohibited through DOE/WIPP 02-3122, *Transuranic Waste Acceptance Criteria for the Waste Isolation Pilot Plant*.
Open flame	Welding or cutting torches are used in conjunction with maintenance activities.
Flammables	The WIPP facility sections evaluated contain fuel and grease associated with equipment operated in the section, paint, paint cleaning and decontamination solvents, and satellite waste accumulation areas that may contain materials susceptible to spontaneous combustion. Flammable hazards are contributors for fire events.
Combustibles	The WIPP facility sections evaluated contain wood pallets, crates, plywood, paper associated with work activities, plastic signs, plastic containers, tarps, personal protective equipment (PPE), and petroleum-based combustibles (e.g., grease, hydraulic fluid, and diesel fuel). The CH Waste drum assemblies include plastic slip-sheets and reinforcement plates and shrink wrap around the drums. The magnesium oxide (MgO) supersacks are made of reinforced nylon and are surrounded by cardboard reinforcement. These combustible materials may be contributors for fire events.
Pressurized Hydraulic Fluids	Hydraulic fluids under pressure are used in operations both above and below ground. Sprays due to leaks may be contributors for fire events.
Chemical reactions	There are no chemical reaction sources identified for the WIPP waste operations for WIPP WAC compliant drums. Incompatible chemical reactions are postulated for WIPP WAC noncompliant drums.
Explosive materials	In addition to gases that may be generated by chemical reactions, the WIPP facility sections evaluated contain explosive materials in the form of hydrogen associated with facility equipment batteries and the generation of hydrogen associated with battery-charging stations. Small explosive charges are also used in the UG to set anchor bolts for supporting piping or cables. For the purpose of hazard identification and hazard evaluation, it is assumed that there are no controls on CH and RH Waste content and that chemical reactions could occur that result in explosive materials being generated. Explosive materials are contributors to explosion events. No large explosions are postulated in filled panels due to long-term gas generation from microbial action or radiolysis because the lower explosive limit will not be reached for over 20 years (WIPP-007).
Kinetic energy	As part of normal operation and maintenance, the WIPP facility sections evaluated contain sources of kinetic energy including vehicles, motors, power tools, moving parts associated with equipment (e.g., belts or bearings), and movement of material via forklift or crane. Other kinetic energy hazards identified include gears, grinders, fans, drills, presses, shears, and saws. Kinetic energy hazards can be initiators for loss of confinement events.
Potential energy (pressure)	The WIPP facility sections evaluated contain sources of potential energy in the form of pressure including pressurized gas bottles, pressure vessels such as a nitrogen accumulator, waste hoist hydraulic system, and compressed-air and pressurized-water piping systems. For the purpose of hazard identification and hazard evaluation, it is assumed that there are no controls on CH and RH Waste content and that CH and RH Waste Containers could be pressurized as the result of gas generation inside the container. Pressurized containers or systems can be an initiator for loss of confinement events.

Hazard	Summary
Potential energy (height/mass)	The WIPP facility sections evaluated include hazards related to elevated equipment that could contribute to accidents involving drops or falls. These include cranes/hoists, elevated doors, elevated work surfaces, man-lifts, scaffolds, and ladders. These hazards may be initiators for loss of confinement events.
Flooding sources	The WIPP facility sections evaluated include water sources that could result in internal flooding. Sources include firefighting water, domestic water, water tanks used for dust control, barrels of water awaiting sample results, and periodic load testing that may involve the use of water weights. These hazards are considered as potential contributors to events involving flooding.
Physical hazards	The WIPP facility sections evaluated include sources of physical hazards, such as sharp edges, pinch points, tripping hazards, confined spaces, and temperature extremes. These physical hazards may result in an injury to a worker but not a direct Waste Container breach.
Radiological material	The WIPP facility sections evaluated include radiological material associated with CH and RH Waste and sources used in the calibration of radiation monitoring equipment. Radiological material is part of the MAR for events that result in a breach of Waste Containers.
Non-radiological HAZMAT	The WIPP facility sections evaluated include HAZMAT including lead associated with batteries, oxygen cylinders, and other HAZMAT associated with maintenance as well as poisons such as insecticides. HAZMAT is also associated with the TRU Waste (e.g., beryllium, lead, mercury, PCBs). HAZMAT in the waste is included in the evaluation of events that result in a breach of Waste Containers.
Ionizing radiation sources	The WIPP facility sections evaluated include potential ionizing radiation sources. The primary ionizing radiation source is the radiological material in the TRU Waste. Ionizing radiation sources are potential initiators for direct exposure events.
Non-ionizing radiation sources	Non-ionizing radiation sources identified in the WIPP facility sections evaluated include the bar code readers used to record/identify Waste Containers, lasers used to detect RH Waste Handling equipment position, light curtains in Room 108 and Automated Guided Vehicles guidance systems, and lasers used for mining or surveying.
Criticality	Fissile material is present in the Waste Containers. However, an inadvertent criticality has been analyzed to be an incredible event at WIPP (WIPP-016, *Nuclear Criticality Safety Evaluation for Contact-Handled Transuranic Waste at the Waste Isolation Pilot Plant*; and WIPP-020, *Nuclear Criticality Safety Evaluation for Remote-Handled Waste at the Waste Isolation Pilot Plan*).
Non-facility events	There is a potential for the WIPP facility sections evaluated to be impacted by events that are initiated at a location external to the facility. The events of concern include aircraft crashes, explosions, and fires. These may involve transport accidents or events that occur in other WIPP structures and propagate to the areas used for handling TRU Waste. These non-facility events are identified and addressed in the hazard identification and hazard evaluation tables.
Vehicles in motion	The WIPP facility sections where CH and RH Waste Handling activities occur have the potential to be affected by various vehicles in motion. These include equipment being used for maintenance, forklifts, Automated Guided Vehicles, vehicles other than those used for Waste Handling and transport, and heavy construction equipment. These vehicle-in-motion events are potential initiators for external events that result in loss of confinement, fire, or explosion.
NPH	The WIPP facility sections where Waste Handling activities occur have the potential to be adversely affected by NPH events, including earthquakes, heavy rain that results in localized flooding, lightning, hail, snow, straight winds, tornadoes, and seasonal temperature extremes. NPH events are assumed to be potential initiators for events resulting in a breach of Waste Containers.

Standard industrial hazards were screened during the hazard identification process. The screening eliminated consideration for burns and electrical shock to the worker. However, these thermal and electrical hazards were carried forward to the hazard evaluation as potential initiators (e.g., ignition source) for events that could release HAZMAT.

The kinetic energy concern focuses on linear or rotational motion and acceleration or deceleration. This includes mobile equipment, including cranes, forklifts, and other vehicles, and fans, motors, and electric or pneumatic tools. These were screened as standard industrial hazards because they are adequately addressed by OSHA standards and site safety requirements and do not represent unique hazards. However, these kinetic energy hazards were carried forward to the hazard evaluation as potential initiators (e.g., impacts) for events that could release HAZMAT. Hazards associated with mining operations and not impacting radiological waste are not analyzed. These hazards are adequately addressed by the Mine Safety and Health Administration (MSHA).

The potential energy hazard involves sources of pressure and height and mass. Hazards related to height and mass include cranes and hoists, elevated doors, lifts, elevated work surfaces, scaffolds and ladders, floor pits, and the facility structure. Sources of pressure include coiled springs, gas bottles, pressurized systems (e.g., air), and pressure vessels. These are screened as standard industrial hazards because they are adequately addressed by OSHA standards and site safety requirements and do not represent unique hazards provided they are not an initiator for a radiological or chemical release.

The physical hazards are pinch points during material movement, tripping hazards, and temperature extremes in summer and winter. These were screened as standard industrial hazards because they are adequately addressed by OSHA standards and site safety requirements and do not represent unique hazards.

Non-radioactive HAZMAT screened were dusts, insecticides, and carbon monoxide buildup from diesel equipment used in the UG. These materials are of types and quantities in everyday use by the MOI or are addressed by OSHA standards and site safety requirements and do not represent unique hazards.

In February 2014, a fire event occurred in the UG. The fire only involved a salt haul vehicle and no chemical or radiological material. Subsequently, but unrelated, a CH Waste drum underwent a rapid chemical reaction resulting in the release of radiological material. No other major accidents or hazardous situations such as fires, explosions, and loss of confinement have occurred in the facility's operating history.

3.3.2.2 Hazard Categorization

The purpose of the Hazard Categorization is to evaluate the general level of hazard a facility poses to the MOI and onsite workers. The hazard category of the facility will provide the level at which the facility DSA is developed. Those facilities with a greater level of hazard require a more rigorous evaluation of hazards. The facility is evaluated for both radiological and chemical hazard levels based on the inventory of material in the facility and the potential consequences those pose to the receptor groups as follows:

- **Nuclear Hazard Category 1**. Hazard analysis shows the potential for significant offsite consequences.
- **Nuclear Hazard Category 2**. Hazard analysis shows the potential for significant onsite consequences.
- **Nuclear Hazard Category 3**. Hazard analysis shows the potential for significant but localized consequences.
- **Radiological or Other Industrial Facility**. Hazard analysis shows the potential for localized consequences.

The nuclear hazard category is assigned based on the guidelines provided in DOE-STD-1027-92 and meets the requirements of 10 CFR 830. A nuclear hazard category of 1 can only be assigned by DOE. The other nuclear hazard categories are assigned by the contractor based on a comparison of the facility's radiological inventory to the threshold quantities in Appendix A of DOE-STD-1027-92.

For determination of Hazard Categorization, the WIPP facility was assessed as a single facility segment. The WIPP radiological inventory exceeds the Nuclear Hazard Category 2 plutonium-239 threshold quantities in DOE-STD-1027-92; thus, is a Nuclear Hazard Category 2 facility.

3.3.2.3 Results of Hazard Evaluation

The WIPP chemical inventory consists of two parts: bulk chemicals used and stored in the WIPP facility and chemical contaminants in the received and disposed TRU Waste. The WIPP facility does not require the use of bulk chemicals in its processes. The hazards associated with the bulk chemicals were analyzed in WIPP-007. Using the criteria of DOE-STD-3009-2014 Section A.2, the chemicals in the WIPP Chemical Inventory that do not screen out would still not result in a release that would exceed the PAC-1 for MOI or PAC-2 for the co-located worker consequence thresholds. Additionally, off-gassing of CH Waste containers over time can result in the buildup of Volatile Organic Compound (VOC) gases in the UG, both in occupied (e.g., drifts, active Disposal Rooms and Panels) and unoccupied (i.e., outside closed Disposal Rooms) areas. Chapter 8.0, "Hazardous Material Protection," was determined to be sufficient to address the control of the chemicals. These chemicals were not moved forward into the final hazard analysis and hazard evaluation, with the exception of VOCs in the UG that warranted further hazard evaluation as discussed later in this section. Based on the nuclear and chemical hazards of the WIPP facility, the general hazard level of the nuclear hazards associated with the facility bound those of the hazards presented by the chemical contaminants in the received and disposed waste.

The WIPP-007, *Hazard Identification Summary Report for WIPP and Carlsbad, NM Operations*, review included the non-disposal areas of the UG. This review identified two non-standard industrial hazards that were carried forward into the hazard analysis as potential initiators of a radiological and/or chemical release event. These hazards were the Fuel and Oil Storage Areas (two total) and electrical transformers located in these areas as these hazards could act as initiators or contributors to accidents. While other hazards are identified in WIPP-007, these hazards are considered to be standard industrial hazards and/or regulated by MSHA and do not constitute a unique hazard resulting in the release of nuclear and/or chemical material or result in a hazard that results in the inability to perform an SAC.

The chemical contamination in the CH and RH Waste is a co-contaminant with radiological contamination. The same mechanisms (e.g., fire, spill, and explosion) that are postulated to release the radionuclides into the atmosphere would release the chemicals into the atmosphere. The resultant consequence level and the Risk Class for both would be similar. In general, the same events would move forward from the hazard analysis / hazard evaluation into the accident analysis, and the same controls would be selected to reduce the frequency or consequence of the events. Controls selected to reduce chemical hazards would be classified at the SS level even when they protect the public except in special cases (DOE-STD-3009-2014). Therefore, the calculation of chemical consequences incurred by MOI or worker is not warranted for the WIPP facility.

This comprehensive hazard evaluation identified events associated with HAZMAT and energy sources associated with normal, abnormal, and accident conditions involving TRU Waste Handling and disposal operations at the WIPP. The results of these activities are documented in the *Hazards Analysis for the Waste Isolation Pilot Plant Transuranic Waste Handling Safety Basis* (WIPP-021), which provides postulated events associated with the hazard sources and an evaluation of each event in terms of frequency and consequence. The results of the hazard analysis are described below.

For definition, the term TRU Waste used throughout this chapter refers to TRU Waste delivered to WIPP from waste generators. WIPP site-derived contaminated material, such as filters from a ventilation system, is specifically excluded from this TRU Waste definition.

A total of 641 events are identified in the hazard analysis. A review of these events resulted in grouping them into a set of 167 unique and representative radiological events which are listed in Table 3.3-6.

Table 3.3-6. Listing of Unique and Representative Hazard Evaluation Events

Event #	Description
CH/RH-EXT-18-001a	Blast wave from an off-site gas pipeline explosion impacts Waste Containers in WHB (CH/RH-EXT-18-001b) or onsite parking area (CH/RH-EXT-18-001c) resulting in a release of radiological material.
CH/RH-OA-01-002a	Large fueled vehicle impacts waste staged on trailers or waste trailer impacts fuel tanker (pool fire) resulting in fuel pool formation and ignition leading to the release of radiological material.
CH/RH-OA-02-001a	Ordinary combustible material fire in Waste Container (internal Waste Container fire) located within the Controlled Area but outside the WHB leads to release of radiological material.
CH/RH-OA-02-002a	Ordinary combustible material fire adjacent to waste located within the Controlled Area but outside the WHB leads to release of radiological material.
CH/RH-OA-05-001a	Fuel tanker collides with multiple staged trailers resulting in explosion and damage to Shipping Packages leading to the release of radiological material.
CH/RH-OA-06-001a	Internal deflagration/over-pressurization in noncompliant (e.g., notified by waste generator or WIPP suspicion) CH or RH Waste Container resulting in release of radiological material.
CH/RH-OA-09-001a	Vehicle impacts loaded trailer resulting in breach of Waste Containers and release of radiological material.
CH/RH-OA-09-002a	Vehicle impacts multiple Waste Containers in the outside area resulting in the release of radiological material.
CH/RH-OA-10-001a	Inadvertent firearm discharge punctures Waste Container results in release of radiological material.
CH/RH-OA-10-002a	Pressurized container impacts Waste Container in the outside area resulting in release of radiological material.
CH/RH-OA-13-001a	Excess direct radiation exposure from waste within containers.
CH/RH-OA-13-002a	Direct and/or inhalation exposure resulting from Shipping Package surface contamination.
CH/RH-OA-14-002a	Criticality in closed Shipping Package.
CH/RH-OA-15-001a	Aircraft impacts Waste Containers in outside area with fire resulting in release of radiological material.
CH/RH-OA-16-001a	Vehicle impacts Waste Containers in outside area resulting in release of radiological material.
CH/RH-OA-17-001a	External vehicle impacts Waste Containers in outside area resulting in fire with release of radiological material.
CH/RH-OA-19-001a	Range fire propagates to Waste Containers in outside area resulting in release of radiological material.
CH/RH-OA-20-001a	Lightning strikes Waste Containers in outside area resulting in release of radiological material.

Event #	Description
CH/RH-OA-21-001a	High wind impacts Waste Containers in outside area resulting in release of radiological material.
CH/RH-OA-21-002a	High wind and subsequent missile impacts Waste Containers in outside area resulting in release of radiological material.
CH/RH-OA-22-001a	Tornado impacts Waste Containers in outside area resulting in release of radiological material.
CH/RH-OA-22-002a	Tornado and subsequent missile impacts Waste Containers in outside area resulting in release of radiological material.
CH/RH-OA-23-001a	Snow/hail buildup on parking shed collapses shed and impacts Waste Containers in outside area resulting in release of radiological material.
CH/RH-OA-24-001a	Seismic event impacts Waste Containers in outside area resulting in release of radiological material.
CH/RH-OA-25-001a	Seismic event results in upending tractor/trailer resulting in pool fire involving CH or RH Waste Shipping Packages resulting in release of radiological material.
CH/RH-OA-26-001a	Flooding external to facility results in release of radiological material.
CH/RH-UG-01-001a	Single vehicle/equipment with liquid combustible capacity experiences fuel/hydraulic leak and pool fire at Waste Face involving CH/RH Waste resulting in release of radiological material.
CH/RH-UG-01-002a1	Collision of two liquid-fueled vehicles during transport with pool fire involving CH and RH Waste resulting in release of radiological material.
CH/RH-UG-01-002a2	Liquid-fueled vehicle fuel/hydraulic fluid leak with pool fire during waste transport involving CH or RH Waste resulting in release of radiological material.
CH/RH-UG-01-002a3	Collision at Waste Shaft Station involving one Facility Cask/Light Weight Facility Cask (LWFC) or one CH facility pallet with pool fire resulting in release of radiological material.
CH/RH-UG-01-004a	Liquid-fueled vehicle collision and pool fire at CH Waste Face involving CH and RH Waste resulting in release of radiological material.
CH/RH-UG-01-005a1	Vehicle containing liquid fuel (e.g., forklift, forklift with 300 gallon diesel tank) enters open Waste Shaft (i.e., conveyance not present) and drops onto loaded Waste Conveyance resulting in large pool fire in the Waste Shaft with a release of radiological material.
CH/RH-UG-01-005a2	Impact event involving vehicle containing liquid fuel (e.g., forklift, forklift with 300-gallon diesel tank, waste transporter) occurs at the Waste Shaft Station resulting in a pool fire in Waste Shaft sump with a release of radiological material.
CH/RH-UG-01-007a1	Lube truck vehicle collision with pool fire in disposal room resulting in release of radiological material.
CH/RH-UG-01-007a2	Lube truck vehicle fuel/hydraulic fluid leak with pool fire in disposal room resulting in release of radiological material.
CH/RH-UG-01-007a3	Lube truck vehicle collision with pool fire in VEZ resulting in release of radiological material.
CH/RH-UG-01-007a4	Lube truck vehicle fuel/ hydraulic fluid leak with pool fire in VEZ affecting waste load resulting in release of radiological material.
CH/RH-UG-01-007a5	Lube truck vehicle collision with pool fire in Waste Shaft Station resulting in release of radiological material.
CH/RH-UG-01-007a6	Lube truck vehicle fuel/hydraulic fluid leak with pool fire in Waste Shaft Station affecting waste load resulting in release of radiological material.

Event #	Description
CH/RH-UG-02-001a	Ordinary combustible material fire in suspect Waste Container (e.g., notified by waste generator or WIPP suspicion) due to spontaneous combustion (internal Waste Container fire) resulting in release of radiological material.
CH/RH-UG-02-002a1	Ordinary solid combustible material fire adjacent to Waste Containers near CH Waste Face resulting in release of radiological material.
CH/RH-UG-02-002a2	Ordinary combustible material fire in the VEZ (solid combustible material fire) resulting in release of radiological material.
CH/RH-UG-02-002a3	Ordinary combustible material fire at the Waste Shaft Station with Waste Containers present in the conveyance (solid combustible material fire) resulting in release of radiological material.
CH/RH-UG-02-002a4	Combustible material fire at the Waste Shaft Station involving RH Facility Cask resulting in release of radiological material.
CH/RH-UG-05-002a	UG Fuel Storage explosion with fire propagates into active waste disposal room resulting in release of radiological material.
CH/RH-UG-05-004a	Electric powered vehicle explosion with fire during battery charging in the UG impacts Waste Container with release of radiological material.
CH/RH-UG-05-005a	Flammable gas explosion in filled panel (methane) results in release of radiological material.
CH/RH-UG-06-001a	Internal deflagration/over pressurization of a noncompliant (e.g., notified by waste generator or WIPP suspicion) CH Waste Container or RH canister outside a closed disposal panel/room resulting in release of radiological material.
CH/RH-UG-09-001a	Two vehicle collision or load drop during waste transport involving CH and RH Waste resulting in release of radiological material.
CH/RH-UG-09-002a	UG vehicle impact with CH Waste Face resulting in release of radiological material.
CH/RH-UG-09-003a	Forklift collides with Waste Containers where tines puncture Waste Containers at CH Waste Face resulting in release of radiological material.
CH/RH-UG-10-002a	Roof bolt ejection impacts stored Waste Container resulting in release of radiological material.
CH/RH-UG-10-003a	Pressurized container impacts a Waste Container in the UG resulting in release of radiological material.
CH/RH-UG-10-004a	Uncontrolled rapid descent of loaded Waste Hoist and impact with Waste Shaft Station floor resulting in Waste Container breach resulting in release of radiological material.
CH/RH-UG-10-005a	Vehicle/equipment carrying waste drives into Waste Shaft Collar and drops onto loaded Waste Shaft Conveyance resulting in release of radiological material.
CH/RH-UG-10-006a	Collapse of stacked Waste Containers resulting in release of radiological material.
CH/RH-UG-10-009a	Waste Container crushed during Waste Handling evolution resulting in release of radiological material.
CH/RH-UG-10-010a	Loss of Waste Container integrity in UG results in release of radiological material.
CH/RH-UG-13-001a	Direct radiation exposure from Waste Containers.
CH/RH-UG-13-002a	Direct contamination on Waste Containers.
CH/RH-UG-14-001a	Criticality in Waste Shaft sump following Waste Conveyance failure.
CH/RH-UG-14-003a	Criticality in disposed waste.

Event #	Description
CH/RH-UG-24-001a	Design Basis Earthquake (DBE) in the UG results in roof collapse in filled disposal panel (closed) or partially filled disposal panel (open) or collapse of stacked containers with release of waste.
CH/RH-UG-25-001a	DBE in the UG results in fire involving CH and RH Waste resulting in release of radiological material.
CH/RH-UG-26-001a	Flooding external to facility enters the Waste Shaft resulting in release of radiological material.
CH/RH-UG-26-002a	Flooding from an internal water source impacts CH or RH Waste resulting in release of radiological material.
CH/RH-UG-28-001a	Loss of power results in release of radiological material.
CH/RH-UG-30-001a1	Roof collapse in filled disposal panel (closed) or partially filled disposal panel (open) resulting in release of radiological material.
CH/RH-UG-30-001a2	Roof collapse during transport resulting in release of radiological material.
CH/RH-WHB-01-001a	Fuel pool fire originating outside the CH Bay (i.e., CLR or RH Bay) affecting TRU Waste resulting in the release of radiological material.
CH/RH-WHB-02-001a	Combustible material fire in noncompliant (e.g., notified by waste generator or WIPP suspicion) Waste Container (internal Waste Container fire) leads to release of radiological material.
CH/RH-WHB-02-002a	Ordinary combustible fire adjacent to Waste Container(s) results in a release of radiological material.
CH/RH-WHB-04-001a	Fire external to WHB propagates to Waste Handling areas affecting the CH and RH Waste resulting in release of radiological material.
CH/RH-WHB-04-002a	Tanker truck fire in outside area propagates to Waste Handling areas affecting CH and RH Waste resulting in release of radiological material.
CH/RH-WHB-04-003a	Large fire in Waste Hoist Tower results in loaded Waste Conveyance dropping to bottom of Waste Shaft, rupturing Waste Containers and releasing radiological material.
CH/RH-WHB-05-003a	Electric powered equipment battery explosion generates projectile which impacts Waste Containers resulting in release of radiological material.
CH/RH-WHB-09-001a	Vehicle enters WHB from outside the building and impacts CH and/or RH Waste resulting in release of radiological material.
CH/RH-WHB-09-002a	Vehicle enters WHB and impacts waste in the Shaft Access Area resulting in release of radiological material.
CH/RH-WHB-10-001a	Inadvertent firearm discharge punctures Waste Container resulting in release of radiological material.
CH/RH-WHB-10-002a1	Loss of Waste Container integrity in WHB results in release of radiological material.
CH/RH-WHB-10-002a2	WHB high-efficiency particulate air (HEPA) filters (CH Bay, RH Bay or Hot Cell Complex) are damaged/breached/ dropped with release of residual filter buildup and decay products.
CH/RH-WHB-13-001a1	Direct radiation exposure from Waste Containers or HEPA filters.
CH/RH-WHB-13-001a2	Direct radiation exposure from RH Waste Containers in Hot Cell Complex.
CH/RH-WHB-13-002a	Direct contamination on Waste Containers.
CH/RH-WHB-15-002a	Aircraft impacts WHB with fire resulting in release of radiological material.
CH/RH-WHB-17-001a	External vehicle impacts Waste Containers in the WHB resulting in fire with release of radiological material.

Event #	Description
CH/RH-WHB-19-001a	Range fire propagates to WHB resulting in release of radiological material.
CH/RH-WHB-20-001a	Lightning strikes WHB and initiates a fire near Waste Containers resulting in release of radiological material.
CH/RH-WHB-20-002a	External or NPH initiated event leads to catastrophic failure of Waste Hoist Tower which results in loaded Waste Conveyance dropping to bottom of Waste Shaft, rupturing Waste Containers and releasing radiological material.
CH/RH-WHB-21-001a	High wind impacts WHB rupturing Waste Container and resulting in release of radiological material.
CH/RH-WHB-21-002a	High wind and subsequent missile impacts WHB, damaging Waste Containers and resulting in release of radiological material.
CH/RH-WHB-22-001a	Tornado impacts RH and/or CH Waste resulting in release of radiological material.
CH/RH-WHB-22-002a	Tornado generates missile that impacts CH or RH Waste assemblies resulting in release of radiological material.
CH/RH-WHB-23-001a	Snow/hail buildup on WHB collapses roof and impacts Waste Containers resulting in release of radiological material.
CH/RH-WHB-24-001a	Seismic event results in release of radiological material.
CH/RH-WHB-25-001a	Seismic event with subsequent fire damages WHB involving CH and RH Waste resulting in release of radiological material.
CH/RH-WHB-26-001a	Flooding external to facility enters WHB and involves CH and/or RH Waste resulting in release of radiological material.
CH/RH-WHB-26-002a	Flooding internal to facility involves CH or RH Waste resulting in release of radiological material.
CH/RH-WHB-28-001a1	Loss of site power results in drop of a single suspended Waste Container with release of radiological material.
CH/RH-WHB-28-001a2	Loss of electrical power to WHB results in simultaneous drops of suspended Waste Containers (i.e., TRUPACT-II Unloading Docks (TRUDOCKs), RH Bay, Hot Cell Complex) with release of radiological material.
CH/RH-WHB-29-001a	Loss of ventilation results in release of radiological material.
CH-OA-10-001a	Drop of Waste Container from forklift in outside area resulting in release of radiological material.
CH-UG-01-001a	Single liquid-fueled vehicle fuel/hydraulic fluid leak with pool fire during waste transport involving CH Waste resulting in release of radiological material.
CH-UG-01-002a1	Collision of two liquid-fueled vehicles with pool fire during waste transport involving CH Waste resulting in release of radiological material.
CH-UG-01-002a2	Collision at UG Waste Shaft Station while loading UG transporter with additional facility pallet in the area and with pool fire resulting in release of radiological material.
CH-UG-01-002a3	Fuel pool fire occurs at Waste Shaft Station with loaded CH facility pallet in the area resulting in release of radiological material.
CH-UG-01-003a1	Single liquid-fueled vehicle collision and pool fire at CH Waste Face resulting in release of radiological material.
CH-UG-01-003a2	Single vehicle/equipment with liquid combustible capacity experiences fuel/hydraulic leak and pool fire at CH Waste Face resulting in release of radiological material.

Event #	Description
CH-UG-04-001a	Fire (flammable or combustible material fire) away from the Waste Disposal Areas (e.g., construction, mining, north ventilation circuit) and Waste Transport Path propagates to active disposal room or Waste Transport Path resulting in release of radiological material.
CH-UG-06-001a	Internal deflagration/over pressurization of noncompliant (e.g., notified by waste generator or WIPP suspicion) CH Waste Container results in release of radiological material.
CH-UG-06-002a	Over-pressurization of noncompliant CH Waste Container in closed disposal room due to exothermic chemical reaction results in release of radiological material.
CH-WHB-01-001a1	Liquid-fueled vehicle fire in CH Bay and/or Room 108 in close proximity to staged waste (pool fire) resulting in release of radiological material.
CH-WHB-01-001a2	Liquid-fueled vehicle fire in Waste Collar Area when CH Waste (pool fire) is present resulting in release of radiological material.
CH-WHB-02-001a	Ordinary combustible fire occurs following a collision involving an electric vehicle resulting in release of radiological material.
CH-WHB-03-001a	Noncompliant Waste Container fire (internal to Waste Container) inside Shielded Storage Room results in release of radiological material.
CH-WHB-04-001a	Large fire in the CH Bay and/or Room 108 involving ordinary combustible materials resulting in release of radiological material.
CH-WHB-04-005a	Collision of two electric powered vehicles with subsequent fire in proximity to CH Waste results in release of radiological material.
CH-WHB-05-001a	CH Bay battery charging station deflagration impacts CH Waste resulting in release of radiological material.
CH-WHB-06-001a	Internal deflagration/over-pressurization in noncompliant (e.g., notified by waste generator or WIPP suspicion) CH Waste Container in WHB resulting in release of radiological material.
CH-WHB-09-001a	Two vehicles carrying Waste inside CH Bay and/or Room 108 collide resulting in the release of radiological material.
CH-WHB-09-003a	Waste Container impacted by forklift tines resulting in release of radiological material.
CH-WHB-10-001a	Pressurized container impacts CH Waste Containers resulting in release of radiological material.
CH-WHB-10-002a	Drop of Waste Containers in CH Bay and/or Room 108 resulting in release of radiological material.
CH-WHB-10-003a	Elevated material falls or drops on Waste Containers resulting in release of radiological material.
NA-OA-02-002a	Above ground ordinary combustible fire affecting Underground Ventilation Filtration System (UVFS)/IVS HEPA filters with release of residual filter buildup and decay products.
NA-OA-02-003a	UG fire results in breach of UVFS/IVS HEPA filters due to high D/P with release of residual filter buildup and decay products.
NA-OA-10-001a	SVS redirects UVS exhaust air away from the UVFS through the unfiltered waste Shaft or Salt Shaft openings to the outside area resulting in release of radiological material.
NA-OA-10-002a	UVFS/IVS HEPA filters are damaged/breached/ dropped with release of residual filter buildup and decay products.
NA-OA-13-001a	Direct radiation exposure from UVFS/IVS spent filters.

Event #	Description
NA-OA-13-002a	Direct and/or inhalation exposure in outside area from UG contamination released through the Waste Shaft.
NA-OA-13-003a	Direct and/or inhalation exposure in outside area from UG contamination released through the Salt Shaft.
NA-UG-13-001a	Direct and/or inhalation exposure from UG contamination.
NA-UG-13-004a	Worker exposure to gases (e.g., VOCs) emanating from CH Waste containers in open Disposal Room.
NA-UG-13-005a	Worker exposure to gases (e.g., VOCs) emanating CH Waste containers in closed panel.
NA-UG-29-001a	Loss of onsite power with loss of UVFS/IVS operability resulting in UG contamination spread including upcasting.
NA-WHB-02-001a	Fire in WHB/Hot Cell HEPA filters results in the release of radiological material.
RH-UG-01-001a1	Single liquid-fueled vehicle fuel/hydraulic fluid leak with pool fire during waste transport involving RH Waste resulting in release of radiological material.
RH-UG-01-001a2	Single liquid-fueled vehicle fuel/hydraulic fluid leak with pool fire at Waste Shaft Station involving RH Waste resulting in release of radiological material.
RH-UG-01-002a1	Collision of two liquid-fueled vehicles with pool fire during waste transport involving RH Waste resulting in release of radiological material.
RH-UG-01-002a2	Collision of two liquid-fueled vehicles with pool fire at Waste Shaft Station involving RH Waste resulting in release of radiological material.
RH-UG-01-003a	Single liquid-fueled vehicle fuel/hydraulic fluid leak with pool fire involving RH Waste Canister in a borehole resulting in release of radiological material.
RH-UG-02-002a	Ordinary combustible material fire involving RH canister resulting in release of radiological material.
RH-UG-04-002a	Ordinary combustible material fire involving RH Waste resulting in release of radiological material.
RH-UG-06-001a	Internal deflagration /over pressurization of RH Waste Canister resulting in release of radiological material.
RH-UG-10-001a	Pressurized container impacts a Waste Container in the UG resulting in release of radiological material.
RH-UG-10-002a	Waste Container crushed during Waste Handling evolution resulting in release of radiological material.
RH-WHB-01-001a	Fuel pool fire in the RH Bay/FCLR results in the release of radiological material.
RH-WHB-01-002a	Collision of two liquid-fueled vehicles in the RH Bay impacting RH Waste Containers with follow-on fire (pool fire) results in a radiological release.
RH-WHB-01-006a	Liquid fuel pool fire in Hot Cell Complex resulting in a release of radiological material.
RH-WHB-02-001a	Ordinary combustible fire involving RH Waste in WHB results in the release of radiological material.
RH-WHB-03-001a	Ordinary combustible fire in Hot Cell Complex with RH Waste present results in release of radiological material.
RH-WHB-04-002a	Large RH Bay fire involving two RH Shipping Packages results in release of radiological material.
RH-WHB-06-001a	Internal deflagration/over-pressurization in noncompliant (e.g., notified by waste generator or WIPP suspicion) RH Waste Container in RH Bay resulting in release of radiological material.

Event #	Description
RH-WHB-06-002a	Internal deflagration/over-pressurization in noncompliant (e.g., notified by waste generator or WIPP suspicion) RH Waste drum/canister in Hot Cell Complex resulting in release of radiological material.
RH-WHB-09-001a	Two vehicles carrying RH Waste inside WHB collide resulting in release of radiological material.
RH-WHB-09-003a	Forklift tines puncture a RH Waste Container resulting in release of radiological material.
RH-WHB-10-001a	Pressurized container impacts Shipping Package containing RH Waste in RH Bay resulting in release of radiological material.
RH-WHB-10-002a	Pressurized container impacts RH Waste Containers in RH Hot Cell Complex resulting in release of radiological material.
RH-WHB-10-003a1	Drop of Shipping Package in RH Bay resulting in release of radiological material.
RH-WHB-10-003a2	Drop of RH Waste Containers in Hot Cell Complex resulting in release of radiological material.
RH-WHB-10-004a	Elevated material falls or drops on RH Waste Containers in Type B Shipping Package resulting in release of radiological material.
RH-WHB-10-005a	RH Shipping Package impacted by object falling from overhead or drop of object and Waste Container damaged resulting in release of radiological material.
RH-WHB-10-006a	Drop of RH Waste in the Hot Cell Complex resulting in release of radiological material.
RH-WHB-10-007a	Elevated materials in Hot Cell Complex falls or drops on waste resulting in release of radiological material.
RH-WHB-10-008a	RH drum punctured by equipment in Upper Hot Cell resulting in release of radiological material.
RH-WHB-10-010a	RH canister crushed during transfer from Shipping Package to Facility Cask resulting in release of radiological material.
RH-WHB-14-002a	Criticality in stored waste.

These events are generically categorized as shown in Table 3.3-7.

Table 3.3-7. Categorization of Hazard Evaluation Events

		Number of Events		
	STD-5506-2007 Event Type(s)	Risk Class I or II to one or more Receptors (Unmitigated)	Not Risk Class I or II to any Receptor (Unmitigated)	Total
E-1, Fire	01, 02, 03, 04	37	19	56
E-2, Deflagration	05, 06, 07, 08	4	10	14
E-3, Loss of Confinement	09, 10, 11, 12	4	37	41
E-4, Direct Exposure	13	0	13	13
E-5, Criticality	14	0	4	4
E-6, External Hazards	15, 16, 17, 18, 19	0	8	8

	STD-5506-2007 Event Type(s)	Number of Events		
		Risk Class I or II to one or more Receptors (Unmitigated)	Not Risk Class I or II to any Receptor (Unmitigated)	Total
E-7, NPH	20, 21, 22, 23, 24, 25	2	17	19
E-8, Other	26, 27, 28, 29, 30	0	12	12
Total		**47**	**120**	**167**

Out of the 167 unique and representative events, 47 events are identified as being an unmitigated Risk Class I or II hazard to one or more receptors. These 47 events are listed in Table 3.3-9. Events not classified as unmitigated Risk Class I or II due to judgment of sequence of actions and/or physical parameters, calculation demonstrating the event to be implausible, incredible (i.e., criticality), or the application of ICs or Assumptions, are discussed immediately following Table 3.3-9.

Controls identified as ICs are described in this section. The Risk Classification of each unique and representative event was reduced to a Risk Class III or IV for all receptors by the application of controls except for the following events:

- CH/RH-WHB-25-001a.
- CH-WHB-01-001a1.
- CH-WHB-02-001a.
- RH-WHB-01-006a.
- RH-WHB-03-001a.

Each of these events originated as a Risk Class I or II to one or more receptors and remained as Risk Class II for co-located workers. The justification for not identifying controls to reduce these events to Risk Class III or IV for the co-located workers is provided in the each of the applicable event discussions below.

ICs are credited in the unmitigated evaluation of the event and are required to be protected in the TSRs. The following ICs were employed during the estimation of frequency and/or consequence in the hazard analysis.

1. The WHB, including the Hot Cell Complex and the Waste Hoist Tower, consists of noncombustible construction materials including permanent fixtures, TRUDOCKs, unbolter station, and Payload Transfer Station. The noncombustible construction minimizes fire propagation into and within the building. The noncombustible construction of the WHB, including the Hot Cell Complex and the Waste Hoist Tower, also provides a confinement barrier for radioactive or HAZMAT releases occurring inside the WHB. The Hot Cell Complex and Shielded Storage Room are constructed of thick concrete for shielding. The WHB structure is also designed to prevent structural failure from natural phenomenon (Sections 1.4 and 1.5) events:

   Note: DOE-STD-1020-2012, *Natural Phenomena Hazards Analysis and Design Criteria for Department of Energy Facilities*, provides that superseded standards are

"…available for reference and use at existing facilities…" The Performance Category-2 criteria of DOE-STD-1020-2002 applies to the WHB.

- The roof design and construction of the WHB, including the Hot Cell Complex and the Waste Hoist Tower prevents building collapse from snow/ice loading on the roof and impacting Waste Containers outside closed Shipping Packages.
- The WHB including the Hot Cell Complex and the Waste Hoist Tower is designed for 110 miles per hour (mph) straight line wind and 183 mph tornado wind.
- The WHB including the Hot Cell Complex and the Waste Hoist Tower is designed for 0.1 g seismic event.

2. WIPP WAC.

The WAC defines the specific requirements that must be met for waste entering the WIPP Site. While not every WIPP WAC requirement applies to each event, the cumulative suite of requirements is required to be protected by compliance with the WIPP WAC. These requirements relate to the physical, chemical, and radiological attributes of the waste, as well as the properties of the applicable payload containers and packages which include:

- Container properties
  - Weight limits
  - Assembly configurations
  - Removable surface contamination
  - Filter vents
- Radiological properties
  - Radionuclide composition
  - Plutonium-239 fissile gram equivalent
  - TRU alpha activity concentration
  - Plutonium-239 equivalent activity
  - Radiation dose equivalent rate
  - Decay heat
- Physical properties
  - Observable liquid
  - Internal sealed containers
- Chemical properties
  - Pyrophoric materials
  - Hazardous waste
  - Chemical compatibility
  - Explosives, corrosives, and compressed gases
  - Headspace gas concentrations
  - PCBs
  - Waste streams containing oxidizers, having the characteristic of reactivity, and contain chemically incompatible materials

The hazard analysis credits the WIPP WAC requirements as ICs or the starting point for postulating hazardous events as follows:

- CH and RH Waste and Waste Containers are subject to waste stream certification requirements (compliance with the *Transuranic Waste Acceptance Criteria for the Waste Isolation Pilot Plant* (WIPP WAC) (DOE/WIPP 02-3122), the *Contact-handled Transuranic Waste Authorized Methods for Payload Control* (CH-TRAMPAC), the *Transuranic Package Transporter Model III Authorized Methods for Payload Control* (TRUPACT-III TRAMPAC), and the *Remote Handled Transuranic Waste Authorized Methods for Payload Control* (RH-TRAMPAC)).
- TRU Waste Container inventories are in compliance with the plutonium-239 equivalent curies (PE-Ci) limits and fissile gram equivalent limits, which are calculated by the generator facility for comparison with the WIPP WAC.
- Generator sites-supplied Waste Container inventories are in compliance with WIPP WAC and reduce the likelihood of Waste Container fires by prohibiting ignitable and corrosive material and non-radioactive pyrophoric material in the waste, and limit radioactive pyrophorics to less than one percent by weight, by prohibiting known incompatible chemicals (e.g., reactive) in the waste, and by venting the Waste Container and inner packaging. Venting ensures hydrogen gas concentration within Waste Containers and any internal packaging remains below the lower flammability limit during long-term storage at the WIPP site.
- The WIPP WAC applies to generator sites that ship waste to the WIPP facility for disposal and identifies fissile mass limits, special reflector/moderator mass limits, Waste Container types, and waste characteristics that have been approved for disposal at WIPP. The fissile mass limits in the WIPP WAC are derived from the CH and RH Nuclear Criticality Safety Evaluations identified (WIPP-016; WIPP-020) fissile mass limits and are specific to the WIPP Waste Handling, storage, and disposal configurations.
- Generator sites supplied Waste Containers are assumed to be compliant with packaging requirements (of sound integrity, noncombustible, vented, and closed) in accordance with the WIPP WAC and the HWFP. Additionally, Waste Containers from the generator sites are certified free of surface contamination above 10 CFR 835, Appendix D limits upon shipment. Packaged material will burn in a confined manner and material ejected from a container would burn in an unconfined manner.
- RH Waste Canisters are shipped in specially designed Type B RH Shipping Packages. The RH Waste Canister is either direct loaded or it can contain up to three RH drums. The Type B RH Shipping Package is designed to provide shielding and minimize radiation exposure from the RH Waste.
- CH and RH Waste Containers are shipped to WIPP in Type B Shipping Packages, which protect their inner containers from releasing their radiological inventory when they are in the outside parking area. Type B Shipping Packages prevent release of radioactive material. Type B Shipping Package external surfaces are required to measure a dose rate of less than 200 millirem (mrem)/hr.
- Waste streams that contain oxidizers, have the characteristic of reactivity, and contain chemically incompatible materials are excluded from shipment to WIPP. This includes the exclusion of wastes with TRUCON Content Number 154 thereby mitigating potential deflagrations associated with high decay heat waste.
- Waste streams packaged in Pipe Overpack Containers (POCs) or Criticality Control Overpacks (CCOs) that contain combustibles are excluded from shipment to WIPP.

Note: The remaining ICs relate to Waste Container types and configurations, inventory restrictions, facility configuration commitments, applicable industry standard operational commitments, industry experience data, and operational process specific commitments. Credit for these ICs is taken in the unmitigated evaluation of the event. The following ICs were employed during the estimation of event unmitigated frequency and/or consequence in the hazard analysis.

3. The WIPP RH Waste Casks (Facility Cask or LWFC) provide confinement of RH Waste Canisters and protect RH Waste from direct flame impingement. The casks also provide significant structural integrity against fires, impacts, and internal deflagrations.
4. The FCLR, CUR, and Transfer Cell are designed to provide shielding for workers when handling high-level defense waste (400,000 rem per hour gamma surface dose and 45 rem per hour neutron). The TRU Waste received at WIPP has gamma and neutron dose rates significantly less than the levels for which WIPP was designed.
5. The UG Fuel and Oil Storage Areas are located away from the disposal rooms and the Waste Transport Path to prevent fueling and oil storage activity related pool fires and/or explosions from involving TRU Waste Containers.
6. UG electrical substations, as are the UG Fuel Storage and Oil Storage locations, are located significantly distant from areas where TRU Waste may be present (i.e., Waste Shaft, Waste Transport Path, disposal rooms) and therefore, will not initiate events leading to the release of radiological material. The crediting of UG Fuel and Oil Storage Areas as a design feature protects UG electrical substations because of their greater distance from Waste Transport Path.

The following assumptions were made during the evaluation of events:

1. The WIPP UG non-combustible construction in a deep-bedded salt formation minimizes propagation of fires (in accordance with Congressional mandate).
2. WIPP RH Waste Boreholes provide confinement of RH Waste Canisters and protect RH Waste from direct flame impingement. Boreholes are drilled into the salt ribs of the disposal room above the floor plane of the disposal room which prevents liquid-combustibles from entering the borehole.
3. Equipment and materials used in the experimental areas in the north UG, as are the UG Fuel and Oil Storage locations, are located significantly distant from areas where TRU Waste may be present (i.e., Waste Shaft, Waste Transport Path, disposal rooms). Equipment and materials, their use, and locations, undergo an Unreviewed Safety Question Determination review prior to downloading, placement, and/or use in the north UG. Therefore, equipment and materials will not initiate events leading to the release of radiological material.
4. The secondary confinement provided by the WHB structure (i.e., walls, access points, roof, and floor) permits the use of a 1-hour release when determining co-located worker and MOI consequences.
5. Waste Container types and assembly configurations are provided in Table 3.3-8. MAR (PE-Ci) values used for analysis are shown in Table 3.4-2.
6. The 12-foot-thick block and mortar explosion-isolation wall is installed in Panel 5 and provides confinement of its contained waste such that no release would occur from any credible event occurring within the panel. The 12-foot-thick block and mortar explosion-isolation wall is described in Section 2.4.4.6. Two containers from the waste stream that led to the February 2014 event are located in Panel 5. Due to the substantial construction for closure of Panel 5, any similar event occurring within Panel 5 would be insufficient to breach the 12-foot-thick block and mortar explosion-isolation wall system.

Table 3.3-8. Waste Container Types and Standard Waste Assembly Configuration

Waste Container Type	Standard Waste Assembly Configuration
55-gallon drum (direct loaded with CH or RH Waste)	Seven-pack [a]
85-gallon drum (direct loaded)	Four-pack [a]
100-gallon drum (direct loaded)	Three-pack [a]
Standard Large Box 2 (SLB2) (direct loaded)	One SLB2 [a]
Standard Waste Box (SWB) (direct loaded)	One SWB [a]
10-Drum Overpack (TDOP)[b] (direct loaded)	One TDOP [a]
SWB or TDOP as an overpack (overpacking an assembly of undamaged 55- or 85-gallon drums with no single payload container within the assembly exceeding 1,100 PE-Ci)	One SWB or TDOP [a]
Shielded container (direct loaded with vented 30-gallon inner metal drum)	Three-pack [a]
Pipe Overpack Container (a 55-gallon drum)	Seven-pack [c]
Criticality Control Overpack	Seven-pack [a]
Solidified/vitrified Waste Container (all)	Depends on Waste Container size
85-gallon drum overpacking an undamaged 55-gallon drum	Four-pack
RH 72-B Waste Canister	One Waste Canister [d] either direct loaded or containing three drums

a Includes all approved waste forms other than solidified/vitrified waste.

b A single TDOP is equivalent to the size of two waste assemblies.

c POCs and CCOs (containing combustible waste materials, excluding radiological control materials and packaging materials normally used to load these containers) shipments to WIPP are prohibited until resolution of POC and CCO confinement issues (see Section 3.6 for additional details).

d RH Waste Canisters include 72-B, NS15, and NS30 canisters.

Unmitigated Hazard Evaluation

An unmitigated hazard evaluation was performed for the WIPP facility. Unmitigated refers to the determination of the frequency and consequences without credit given for preventive or mitigative features other than the specified ICs and initial assumptions. Using the information gathered during the hazard identification phase of the analysis, events were postulated involving the HAZMAT and energy sources available in the facility. These events were documented along with their causes, the frequency and consequences of the event were determined, and the events were evaluated (according to the methodology presented in Section 3.3.1.2) to determine their relative risk rank to the various receptors. In addition to the event development, potential controls, both preventive and mitigative, were identified for each event regardless of the pedigree of the control. The detailed results of the unmitigated hazard evaluation are provided in WIPP-021.

Table 3.3-9 lists those events from WIPP-021 that resulted in an unmitigated risk ranking of either Risk Class I or Risk Class II to the facility worker, co-located worker or MOI.

Table 3.3-9. Hazard Evaluation Events Requiring Further Evaluation

Event Number(s)	Unmitigated Frequency	Unmitigated Consequences			Unmitigated Risk			Mitigated Hazard Evaluation Performed (Controls selected/credited) (I or II)	Accident Analysis Performed (Public protection) (High/Moderate to the MOI)
		Facility Worker	Co-located Worker	MOI	Facility Worker	Co-located Worker	MOI		
E-1: Fire Events									
UG: Waste Disposal Room									
CH/RH-UG-01-001a	A	H	H	L	I	I	III	Y	N
CH-UG-01-003a2	A	H	H	L	I	I	III	Y	N
CH/RH-UG-01-004a	U	H	H	L	I	I	III	Y	N
CH-UG-01-003a1	U	H	H	L	I	I	III	Y	N
CH/RH-UG-01-007a1	U	H	H	L	I	I	III	Y	N
CH/RH-UG-01-007a2	A	H	H	L	I	I	III	Y	N
CH/RH-UG-02-002a1	A	H	M	L	I	II	III	Y	N
UG: VEZ									
CH/RH-UG-01-002a1	U	H	H	L	I	I	III	Y	N
CH-UG-01-002a1	U	H	H	L	I	I	III	Y	N
CH/RH-UG-01-007a3	U	H	H	L	I	I	III	Y	N
CH/RH-UG-01-007a4	A	H	H	L	I	I	III	Y	N
CH/RH-UG-01-002a2	A	H	H	L	I	I	III	Y	N
CH-UG-01-001a	A	H	H	L	I	I	III	Y	N
CH/RH-UG-02-002a2	A	H	M	L	I	II	III	Y	N
UG: Waste Shaft Station									
CH/RH-UG-01-002a3	U	H	H	L	I	I	III	Y	N
CH-UG-01-002a2	U	H	H	L	I	I	III	Y	N
CH-UG-01-002a3	A	H	H	L	I	I	III	Y	N
CH/RH-UG-01-007a5	U	H	H	L	I	I	III	Y	N
CH/RH-UG-01-007a6	A	H	H	L	I	I	III	Y	N
CH/RH-UG-01-005a1*	EU	H	H	M	II	II	III	Y	Y
CH/RH-UG-01-005a2	U	H	H	L	I	I	III	Y	N
CH/RH-UG-02-002a3	A	H	M	L	I	II	III	Y	N
Waste Handling Building Fires									
CH/RH-WHB-01-001a	U	L	H	L	III	I	III	Y	N
CH-WHB-01-001a1	A	L	H	L	III	I	III	Y	N

Event Number(s)	Unmitigated Frequency	Unmitigated Consequences			Unmitigated Risk			Mitigated Hazard Evaluation Performed (Controls selected/credited) (I or II)	Accident Analysis Performed (Public protection) (High/Moderate to the MOI)
		Facility Worker	Co-located Worker	MOI	Facility Worker	Co-located Worker	MOI		
CH-WHB-01-001a2	A	L	H	L	III	I	III	Y	N
CH/RH-WHB-04-001a	U	L	M	L	III	II	III	Y	N
CH-WHB-04-001a	U	L	M	L	III	II	III	Y	N
CH/RH-WHB-04-002a	U	L	M	L	III	II	III	Y	N
CH/RH-WHB-04-003a	EU	H	H	L	II	II	IV	Y	N
CH/RH-WHB-02-002a	A	L	M	L	III	II	III	Y	N
CH-WHB-02-001a	A	L	M	L	III	II	III	Y	N
CH-WHB-04-005a	A	L	H	L	III	I	III	Y	N
RH-WHB-01-006a	A	L	M	L	III	III	III	Y	N
RH-WHB-03-001a	A	L	M	L	III	II	III	Y	N
Internal Container Fires									
CH/RH-UG-02-001a	A	H	M	L	I	II	III	Y	N
CH/RH-WHB-02-001a	A	L	M	L	III	II	III	Y	N
CH-WHB-03-001a	A	L	M	L	III	II	III	Y	N
E-2: Deflagration									
CH/RH-UG-06-001a	A	H	L	L	I	III	III	Y	N
CH-UG-06-001a	A	H	M	L	I	II	III	Y	N
CH-UG-06-002a	A	H	H	L	I	I	III	Y	N
CH-WHB-06-001a	A	H	L	L	I	III	III	Y	N
E-3: Loss of Confinement Events									
CH/RH-UG-09-003a	A	L	M	L	III	II	III	Y	N
CH/RH-UG-10-003a	A	L	M	L	III	II	III	Y	N
CH/RH-UG-10-004a	EU	H	H	L	II	II	IV	Y	N
CH/RH-UG-10-005a*	EU	H	H	M	II	II	III	Y	Y
E-6: Externally-, E-7: NPH-, E-8: Other-Initiated Events									
CH/RH-WHB-20-001a	U	L	M	L	III	II	III	Y	N
CH/RH-WHB-25-001a	U	L	M	L	III	II	III	Y	N

Notes: * CH/RH-UG-01-005a1 and CH/RH-UG-10-005a are the only events considered to challenge the DOE-STD-3009-2014 Evaluation Guideline.

H = High; M = Moderate; L = Low.

A set of events is precluded from the events listed in Table 3.3-9 due to credited ICs, assumptions, calculation, and/or physical characteristics of the WIPP site. Justification is provided to support each conclusion.

Criticality events (CH/RH-OA-14-002a, CH/RH-UG-14-001a, CH/RH-UG-14-003a, and RH-WHB-14-002a) involving the TRU Waste during Waste Handling or disposal are determined to be incredible events based on *Nuclear Criticality Safety Evaluation for Contact-Handled Transuranic Waste at the Waste Isolation Pilot Plant* (WIPP-016) and for *Nuclear Criticality Safety Evaluation for Remote-Handled Waste at the Waste Isolation Pilot Plan* (WIPP-020). The Nuclear Criticality Safety Evaluations evaluated both CH and RH Waste to ensure that the CH and RH processes will remain subcritical under normal and credible abnormal conditions per DOE Order 420.1C and DOE-STD-3007-2007 in accordance with the guidance of DOE-STD-3009-2014.

An aircraft impacting waste in the IC of Type B Shipping Packages in the WHB south Parking Area Unit (CH/RH-OA-15-001a) is calculated to be a Beyond Extremely Unlikely event at less than 10^{-6} per year (WIPP-008, *Estimate of Aircraft Crash Frequency at the Waste Isolation Pilot Plant*) based on the methodology outlined in DOE-STD-3014-96.

A flammable gas explosion in a filled panel (CH/RH-UG-05-005a) was judged to be Beyond Extremely Unlikely (DOE/WIPP 12-3492-2, *Semi-Annual VOC, Hydrogen, and Methane Data Summary Report for Reporting Period July 1, 2012 through December 31, 2012*). The waste in a filled panel creates hydrogen and other flammable gases such as methane. The drums are vented before being sent to WIPP to allow these gases to escape the confines of the drum and reduce the probability of a drum deflagration. Analyses included in Appendix I1 of the WIPP RCRA Part B Permit Application address the expected maximum generation rates in filled panels. The analyses evaluated drum gas generation rates for both methane and hydrogen. For methane, it would take five years to reach 1 percent concentration or 20 percent of the lower flammability limit within a single drum. For hydrogen, the concentration is less than 1 percent or 25 percent of the lower flammability limit in a single drum after five years. The gas exiting the confines of the drums would collect in a filled panel. The 12-foot-thick block and mortar explosion-isolation wall and potential for gas generation behind a closed panel are described in DSA, Section 2.4.4.6. Based on the generation rates, it is not anticipated a filled panel would reach its lower flammability limit within the operational lifetime of the facility. Once in the panel the gases could escape from the panel because the rooms are not airtight and do have air in-leakage. Additionally, the flammable gas production process is a slow developing process. For a flammable gas explosion to occur, an ignition source is needed in addition to the correct mixture of flammable gas and oxygen. For example, once the panel is filled, one ignition source available is static electric discharge associated with the gas escaping from the drum. The probability of this occurring is greatly limited because vents are typically made of materials that impede the production of static electricity. Therefore, the judgment of Beyond Extremely Unlikely is reasonable.

A flammable gas explosion in the CH Bay due to hydrogen generation from the charging stations (CH-WHB-05-001a) was judged to be Beyond Extremely Unlikely. An analysis (WP 09-CN3031, *Hydrogen generation by fork-truck rechargers in CH Bay of WHB*) evaluated the hydrogen generation rate of the fork-truck recharging station in combination with the CH Bay volume and CH Waste Handling (WH) Confinement Ventilation System (CVS) flow rates and determined that it would require 126.67 hours to reach a hydrogen concentration of 1 percent by volume with absolutely no ventilation. Therefore, the judgment of Beyond Extremely Unlikely is reasonable.

An aircraft impacting the WHB (CH/RH-WHB-15-002a) is calculated to be a Beyond Extremely Unlikely event at less than 10^{-6} per year (WIPP-008) based on the methodology outlined in DOE-STD-3014-96.

A fire away from the Waste Disposal Areas (i.e., construction, mining, north ventilation circuit) and Waste Transport Path (CH-UG-04-001a) is judged to be a Beyond Extremely Unlikely event due to the non-combustibility of the salt (initial assumptions) in the UG and the distances from TRU Waste. WIPP-023, *Fire Hazard Analysis for the Waste Isolation Pilot Plant*, postulates multiple scenarios for UG fires. A pool fire originating a distance of 25 feet from TRU Waste was qualitatively judged to have negligible effect on the TRU Waste Containers due to the multiplicity of conditions that must exist to result in the containerized waste burning with a resulting release. The areas addressed by this event are significantly greater than the 25 foot distance.

An event involving a direct radiation exposure (CH/RH-WHB-13-001a2) is judged to be Low consequences. RH Waste is handled in the FCLR, Transfer Cell, and CUR which have thick concrete walls to provide shielding for workers. This IC protects facility workers during the processing of RH Waste in these areas.

External offsite vehicles colliding with Waste Containers within the WHB (CH/RH-WHB-17-001a) is deemed to be not plausible due to the distance of public access roads from the WHB and the fenced WIPP PPA.

An event involving a gas pipeline explosion offsite impacting (CH/RH-EXT-18-001a) waste is judged to be Extremely Unlikely with no release. The distances separating the WHB and the evaluated hazards in combination with the TRU Waste being in Type B Shipping Packages (IC) are sufficient to impede the postulated events from impacting the waste.

The likelihood of a range fire propagating to the WHB (CH/RH-WHB-19-001a) and resulting in a release of radioactive materials was also determined to be Beyond Extremely Unlikely based upon the WIPP PPA being of noncombustible construction (e.g., paved/graveled) and the IC of the WHB, including the Waste Hoist Tower, being constructed of noncombustible materials.

An event involving a direct radiation exposure (CH/RH-OA-13-001a) from waste is judged to result in Low consequences to all receptors. All TRU Waste shipped to WIPP is required to comply with the WIPP WAC. In the outside area, TRU Waste is contained in Type B Shipping Packages (IC) which are designed to protect the public from radiation exposure during transport of TRU Waste on public roadways. The Radiation Protection Program (RPP) surveys TRU Waste receipts prior to entry to the site protected area.

Insults to Type B Shipping Packages in the OA are judged to result in no release because the events are judged to be within the IC of Type B Shipping Package design and will not result in a release of radionuclides into the atmosphere. Events involving mechanical insults to RH Type B Shipping Packages inside the WHB also are judged to result in no release because they are within the IC of Type B Shipping Package design. These events include:

CH/RH-EXT-18-001a	CH/RH-OA-01-002a	CH/RH-OA-02-001a	CH/RH-OA-02-002a
CH/RH-OA-05-001a	CH/RH-OA-06-001a	CH/RH-OA-09-001a	CH/RH-OA-09-002a
CH/RH-OA-10-001a	CH/RH-OA-10-002a	CH/RH-OA-16-001a	CH/RH-OA-17-001a
CH/RH-OA-19-001a	CH/RH-OA-20-001a	CH/RH-OA-21-001a	CH/RH-OA-21-002a
CH/RH-OA-22-001a	CH/RH-OA-22-002a	CH/RH-OA-23-001a	CH/RH-OA-24-001a
CH/RH-OA-25-001a	CH/RH-OA-26-001a	CH-OA-10-001a	

An event involving a fire outside the active disposal areas (e.g., construction, mining, north ventilation circuit) propagating to the active disposal room or disposal route (CH/RH-UG-05-002a) is judged to be Anticipated but with no release. The non-combustibility of salt (initial assumptions) and the distance separating the active mining portion of the UG from the Waste Transport Path and active disposal panels

(IC) would impede a fire in one portion of the UG propagating over a large distance to another portion of the UG. An explosion involving the UG Fuel Storage or Oil Storage location (IC) propagating into an active disposal room or disposal route is judged to be Anticipated with no release based upon the IC of separation of the UG Fuel and Oil Storage location from TRU Waste in the UG. Diesel fuel, which is a normally a hydrocarbon mixture of thousands of individual compounds with a carbon number between 9 and 23, is generally an NFPA 30 Class II combustible liquid with a flashpoint between 100°F and 140°F although some diesel products have a flash point above 140°F. The boiling temperature of diesel fuel generally ranges between 300°F and 640°F. Diesel fuel is not stored in the UG under pressure or processed above its flash point. The ambient temperature in the UG is normally less than 100°F.

Large fires and loss of confinement events involving RH Type B Shipping Packages in the WHB RH Bay were deemed to result in no release because of the protection provided by the RH Type B Shipping Packages (IC). Likewise, an internal deflagration or over-pressurization of a RH canister or waste drum within an RH Type B Shipping Package (IC) were deemed to result in no release. These events include:

RH-WHB-01-001a	RH-WHB-01-002a	RH-WHB-02-001a	RH-WHB-04-002a
RH-WHB-06-001a	RH-WHB-09-001a	RH-WHB-09-003a	RH-WHB-10-001a
RH-WHB-10-003a1	RH-WHB-10-005a		

Fire and internal container deflagration events involving RH Waste in a canister contained within the RH Waste Cask/LWFC are judged to be Low consequences to all receptors. The Facility Cask/LWFC protects the contained TRU Waste Canister from exposure to flame and reduces the consequences of this event to Low and Risk Class III for all receptors. These events include:

CH/RH-UG-01-001a	CH/RH-UG-01-002a1	CH/RH-UG-01-002a2	CH/RH-UG-01-002a3
CH/RH-UG-01-004a	CH/RH-UG-01-005a1	CH/RH-UG-01-005a2	CH/RH-UG-01-007a1
CH/RH-UG-01-007a2	CH/RH-UG-01-007a3	CH/RH-UG-01-007a4	CH/RH-UG-01-007a5
CH/RH-UG-01-007a6	CH/RH-UG-02-001a	CH/RH-UG-02-002a1	CH/RH-UG-02-002a2
CH/RH-UG-02-002a3	CH/RH-UG-02-002a4	CH/RH-UG-06-001a	CH/RH-UG-10-005a
CH/RH-UG-28-001a	CH/RH-WHB-02-001a	CH/RH-WHB-02-002a	CH/RH-WHB-04-001a
CH/RH-WHB-04-002a	CH/RH-WHB-04-003a	CH/RH-WHB-25-001a	CH/RH-WHB-28-001a2
RH-UG-01-001a1	RH-UG-01-001a2	RH-UG-01-002a1	RH-UG-01-002a2
RH-UG-02-002a	RH-UG-04-002a	RH-UG-06-001a	RH-WHB-01-001a

An event involving an external or NPH initiated event leading to a catastrophic failure of the Waste Hoist Tower and resulting in a loaded Waste Conveyance dropping down the Waste Shaft (CH/RH-WHB-20-002a) is judged to have a frequency of Unlikely due to the potential NPH initiators; however, the ICs of design and construction of the Waste Hoist Tower (i.e., DBE, tornado, high winds, and snow loading) in coincidence with the Waste Hoist Support Structure are judged to be sufficient to result in no significant impact to the loaded Waste Conveyance. Therefore, a consequence of no release is justified.

Events involving a high wind or tornado impact of the WHB (CH/RH-WHB-21-001a and CH/RH-WHB-22-001a) are judged to be no release. Tornado or high wind generated missiles may result in a release (CH/RH-WHB-21-002a and CH/RH-WHB-22-002a); however, these missile events were evaluated to be Low consequences which did not warrant further evaluation. The Design Basis Tornado (DBT) construction of the WHB is adequate to protect the TRU Waste from damage and therefore, a consequence of no release is justified.

An event involving a high snow loading of the WHB (CH/RH-WHB-23-001a) is judged to be no release. The roof loading design and construction of the WHB is adequate to protect the TRU Waste from damage and therefore, a consequence of no release is justified.

An event involving exposure of UG facility workers (NA-UG-13-004a) to gases (e.g., VOCs) emanating from CH Waste containers in an active Disposal Room and minimal leakage of gases from closed Disposal Rooms is judged to result in Low consequences even without active ventilation. The gradual accumulation and diffusion of vapors outside vented containers would not create an atmosphere of a significant toxic hazard (e.g., high acute toxicity over a sufficient exposure duration) that would meet the DOE-STD-3009-2014 expectation of an event requiring SS controls due to significant chemical exposure, serious injury, or fatality. While DOE STD-3009-2014 does not specify threshold limits for facility workers (as it does for the co-located worker and public), the facility worker exposure is qualitatively assessed to be below a concentration associated with life-threatening health effects over a sufficient exposure duration (e.g., a peak 15 minute time-weighted average air concentration is used for co-located worker and public determination of exceeding PAC-3 and PAC-2 levels, respectively). Historical sampling of VOCs in the UG, in accordance with provisions of the HWFP, has detected elevated levels which were primarily associated with areas of inadequate airflow from the UVFS. Without forced ventilation that is normally available in these areas, only natural mechanisms for dispersal and removal are available such as diffusion and limited circulation induced by pressure changes. Only infrequent entries are made into these areas. High levels of VOC concentrations have been measured in areas with low or no active airflow but were observed to quickly dissipate; however, only a fraction of the temporary peak concentration is attributed to potentially toxic VOCs. This experience supports a judgement that the potential for VOCs in these dead legs entails pockets of VOC concentration well below the levels behind the closure barriers and easily dissipated when disrupted. No potential for sustained high exposure to facility workers is identified based on this experience. Chapter 8.0, “Hazardous Material Protection,” establishes requirements for surveys of areas for air quality and determines the level of PPE required, if any, prior to performance of work and a Key Element (KE 8-1) for UG Air Quality Monitoring is specified in Chapter 8.0. Therefore, a consequence of Low to the facility worker is justified on a qualitative basis.

An event involving exposure of UG facility workers (NA-UG-13-005a) to gases (e.g., VOCs) forced from within a closed Disposal Room and into occupied areas of the UG is judged to be Low consequences. Gases diffusing from Waste containers in closed Disposal Rooms gradually accumulate in a closed Disposal Room. A closed Disposal Room is isolated from occupied areas of the UG by installation of a barricade that both prohibits access and blocks ventilation to the filled Disposal Room. If a roof fall were to occur in an adjacent closed Disposal Room, additional VOCs could be forced out compared to normal leakage due to the movement of air within the closed Disposal Room; however, the air movement would only last for a few seconds and would limit the volume of gas that could be forced into occupied areas of the UG (PLG-1167). No significant release to the occupied areas is predicted. The vapors forced into occupied areas of the UG would not create an atmosphere of a significant toxic hazard (e.g., a peak 15-minute time-weighted average air concentration is used for co-located worker and public determination of exceeding PAC-3 and PAC-2 levels, respectively), and therefore the concentrations to exposed facility workers in the UG is qualitatively judged to not result in a fatality, serious injury, or significant chemical exposure as defined by DOE-STD-3009-2014. Chapter 8.0, “Hazardous Material Protection,” establishes requirements for surveys of areas for air quality and determines the level of PPE required, if any, prior to performance of work and a Key Element (8-1) for UG Air Quality Monitoring is specified in Chapter 8.0. Therefore, a consequence of Low to the facility worker is justified on a qualitative basis.

These events were reviewed to determine whether any associated controls warranted safety classification even though the event was unmitigated Risk Class III or IV. No events were determined to require classification of additional controls beyond the stated ICs except for a control requiring that TRU Waste outside of the WHB be in a closed Type B Shipping Package. This ensures that any TRU Waste outside of the WHB is protected by the Shipping Package as described above.

Unmitigated Frequency and Consequence Levels

For each postulated event in WIPP-021, the frequency was determined using both quantitative and qualitative processes. The frequency level for each event was established using engineering judgment, DOE-STD-5506-2007, or supporting technical documentation.

The following controls were credited as ICs for one or more events and require inclusion as SS controls in the TSRs:

- **WIPP WAC Compliance**. Compliance with the WAC reduces both the likelihood and consequences of adverse events. The WIPP WAC provides assurance that waste meets specific criteria for the containers in which it is packaged as well as the contents of each package. The package provides some resistance to adverse events (e.g., drops). The WIPP WAC limits radionuclide composition, quantities of liquids, constituencies of contents, combinations of materials which are relied upon when determining consequences from upsets to the containers. Upon opening of a Type B Shipping Package, a visual inspection of the payload ensures that Waste Containers are not “suspect” per DOE-STD-5506-2007. The WIPP WAC defines boundaries for analysis (including MAR limits in various waste containers) requiring protection as a SS control. The WIPP WAC is credited to protect an IC of this analysis for the following events:

CH/RH-OA-14-002a	CH/RH-UG-01-001a	CH/RH-UG-01-002a1	CH/RH-UG-01-002a2
CH/RH-UG-01-002a3	CH/RH-UG-01-004a	CH/RH-UG-01-005a1	CH/RH-UG-01-005a2
CH/RH-UG-01-007a1	CH/RH-UG-01-007a2	CH/RH-UG-01-007a3	CH/RH-UG-01-007a4
CH/RH-UG-01-007a5	CH/RH-UG-01-007a6	CH/RH-UG-02-001a	CH/RH-UG-02-002a1
CH/RH-UG-02-002a2	CH/RH-UG-02-002a3	CH/RH-UG-02-002a4	CH/RH-UG-05-002a
CH/RH-UG-05-004a	CH/RH-UG-05-005a	CH/RH-UG-09-001a	CH/RH-UG-09-002a
CH/RH-UG-09-003a	CH/RH-UG-10-002a	CH/RH-UG-10-003a	CH/RH-UG-10-004a
CH/RH-UG-10-005a	CH/RH-UG-10-006a	CH/RH-UG-10-009a	CH/RH-UG-10-010a
CH/RH-UG-13-001a	CH/RH-UG-13-002a	CH/RH-UG-14-001a	CH/RH-UG-14-003a
CH/RH-UG-24-001a	CH/RH-UG-25-001a	CH/RH-UG-26-001a	CH/RH-UG-26-002a
CH/RH-UG-28-001a	CH/RH-UG-30-001a1	CH/RH-UG-30-001a2	CH/RH-WHB-01-001a
CH/RH-WHB-02-001a	CH/RH-WHB-02-002a	CH/RH-WHB-04-001a	CH/RH-WHB-04-002a
CH/RH-WHB-04-003a	CH/RH-WHB-05-003a	CH/RH-WHB-09-001a	CH/RH-WHB-09-002a
CH/RH-WHB-10-001a	CH/RH-WHB-10-002a1	CH/RH-WHB-13-001a1	CH/RH-WHB-13-001a2
CH/RH-WHB-13-002a	CH/RH-WHB-15-002a	CH/RH-WHB-17-001a	CH/RH-WHB-19-001a
CH/RH-WHB-20-001a	CH/RH-WHB-20-002a	CH/RH-WHB-21-001a	CH/RH-WHB-21-002a
CH/RH-WHB-22-001a	CH/RH-WHB-22-002a	CH/RH-WHB-23-001a	CH/RH-WHB-24-001a
CH/RH-WHB-25-001a	CH/RH-WHB-26-001a	CH/RH-WHB-26-002a	CH/RH-WHB-28-001a1
CH/RH-WHB-28-001a2	CH/RH-WHB-29-001a	CH-UG-01-001a	CH-UG-01-002a1
CH-UG-01-002a2	CH-UG-01-002a3	CH-UG-01-003a1	CH-UG-01-003a2
CH-UG-06-001a	CH-UG-06-002a	CH-WHB-01-001a1	CH-WHB-01-001a2
CH-WHB-02-001a	CH-WHB-03-001a	CH-WHB-04-001a	CH-WHB-04-005a
CH-WHB-05-001a	CH-WHB-09-001a	CH-WHB-09-003a	CH-WHB-10-001a
CH-WHB-10-002a	CH-WHB-10-003a	RH-UG-01-001a1	RH-UG-01-001a2
RH-UG-01-002a1	RH-UG-01-002a2	RH-UG-01-003a	RH-UG-02-002a
RH-UG-04-002a	RH-UG-06-001a	RH-UG-10-001a	RH-UG-10-002a
RH-WHB-01-001a	RH-WHB-01-002a	RH-WHB-01-006a	RH-WHB-02-001a
RH-WHB-03-001a	RH-WHB-04-002a	RH-WHB-06-001a	RH-WHB-06-002a
RH-WHB-09-001a	RH-WHB-09-003a	RH-WHB-10-001a	RH-WHB-10-002a

RH-WHB-10-003a1	RH-WHB-10-003a2	RH-WHB-10-004a	RH-WHB-10-005a
RH-WHB-10-006a	RH-WHB-10-007a	RH-WHB-10-008a	RH-WHB-10-010a
RH-WHB-14-002a			

- **Type B Shipping Package**. The Type B Shipping Package design is certified by the U.S. Nuclear Regulatory Commission (NRC) for transport of radiological wastes on the public highways. Extensive testing has been performed to ensure the waste is protected from release in the case of an upset condition. The passive DF of the Type B Shipping Package prevents radiological releases from its contained loads and reduces the likelihood for excessive gamma and/or neutron exposure to workers. The Type B Shipping Package requires protection as a SS control. The Type B Shipping Package is credited to protect an IC of this analysis for the following events:

CH/RH-EXT-18-001a	CH/RH-OA-01-002a	CH/RH-OA-02-001a	CH/RH-OA-02-002a
CH/RH-OA-05-001a	CH/RH-OA-06-001a	CH/RH-OA-09-001a	CH/RH-OA-09-002a
CH/RH-OA-10-001a	CH/RH-OA-10-002a	CH/RH-OA-13-001a	CH/RH-OA-16-001a
CH/RH-OA-17-001a	CH/RH-OA-19-001a	CH/RH-OA-20-001a	CH/RH-OA-21-001a
CH/RH-OA-21-002a	CH/RH-OA-22-001a	CH/RH-OA-22-002a	CH/RH-OA-23-001a
CH/RH-OA-24-001a	CH/RH-OA-25-001a	CH/RH-OA-26-001a	CH-OA-10-001a
RH-WHB-01-001a	RH-WHB-01-002a	RH-WHB-02-001a	RH-WHB-04-002a
RH-WHB-06-001a	RH-WHB-09-001a	RH-WHB-09-003a	RH-WHB-10-001a
RH-WHB-10-003a1	RH-WHB-10-005a		

Note: The Type B Shipping Package control is further protected by the following "TRU Waste Outside the WHB" preventive control. This control is <u>not</u> an IC, but is included here as it supports the assumption that all TRU Waste outside of the WHB is contained in a Type B Shipping Package.

- **TRU Waste Outside the WHB**. The TRU Waste outside the WHB control requires that aboveground TRU Waste Containers outside of the WHB are contained within a closed Type B Shipping Package. This ensures that Shipping Packages are not opened until located inside the WHB and in the event that unpackaged TRU Waste must be moved back outside of the WHB (e.g., returned to waste generator), that it is placed into a closed Type B Shipping Package prior to exiting the WHB. This reduces the likelihood for TRU Waste Containers to be outside of a Type B Shipping Package and vulnerable when not protected by the WHB. No additional frequency or mitigation reduction is credited as a result of this control. The TRU Waste outside the WHB administrative control requires protection as a SS control. The TRU Waste outside the WHB is credited for the same events as the Type B Shipping Package control listed above.

- **UG Fuel and Oil Storage Rooms located away from Waste Handling and Storage Areas**. The UG Fuel and Oil Storage locations are defined in the configuration of the UG and are located north of the areas used for storage and transport of TRU Waste. This passive DF reduces the likelihood that fires and/or explosions at the UG Fuel or Oil Storage locations could affect the handling and storage of waste. The UG Fuel and Oil Storage Areas require protection as a SS control. The UG Fuel and Oil Storage locations being located away from the Waste Transport Path and the disposal rooms is credited to protect an IC of this analysis for the following event:

  CH/RH-UG-05-002a

- **RH Waste Cask (Facility Cask/Light Weight Facility Cask) Shielding**. The lead liner surrounding the enclosed facility canister ensures worker exposure is reduced below threshold levels (e.g., direct exposure). The WIPP RH Waste Casks (Facility Cask and LWFC) require protection as a SS control. The RH Waste Cask Shielding is credited to protect an IC of this analysis for the following event:

  CH/RH-UG-13-001a

- **RH Waste Cask (Facility Cask/Light Weight Facility Cask) Structural Integrity**. The robust construction of the RH Facility Cask ensures that RH Waste is protected from anticipated insults (e.g., fire, deflagration, loss of confinement) by minimizing damage to the Waste Canister that encloses the waste, thereby reducing the likelihood of the release of radiological material. The WIPP RH Waste Casks (Facility Cask and LWFC) require protection as a SS control. The RH Waste Cask Structural Integrity was credited to protect an IC of this analysis for the following events:

CH/RH-UG-01-001a	CH/RH-UG-01-002a1	CH/RH-UG-01-002a2	CH/RH-UG-01-002a3
CH/RH-UG-01-004a	CH/RH-UG-01-005a1	CH/RH-UG-01-005a2	CH/RH-UG-01-007a1
CH/RH-UG-01-007a2	CH/RH-UG-01-007a3	CH/RH-UG-01-007a4	CH/RH-UG-01-007a5
CH/RH-UG-01-007a6	CH/RH-UG-02-001a	CH/RH-UG-02-002a1	CH/RH-UG-02-002a2
CH/RH-UG-02-002a3	CH/RH-UG-02-002a4	CH/RH-UG-06-001a	CH/RH-UG-10-005a
CH/RH-UG-28-001a	CH/RH-WHB-02-001a	CH/RH-WHB-02-002a	CH/RH-WHB-04-001a
CH/RH-WHB-04-002a	CH/RH-WHB-04-003a	CH/RH-WHB-25-001a	CH/RH-WHB-28-001a2
RH-UG-01-001a1	RH-UG-01-001a2	RH-UG-01-002a1	RH-UG-01-002a2
RH-UG-02-002a	RH-UG-04-002a	RH-UG-06-001a	RH-WHB-01-001a

- **Waste Hoist Support Structure**. The Waste Hoist Support Structure is the physical structure that supports the Waste Hoist, and is designed to withstand the DBE. The Waste Hoist Support Structure is constructed of non-combustible materials. The Waste Hoist systems in the Waste Shaft and all shaft furnishings are designed to resist the dynamic forces of the hoisting operations (the dynamic forces are greater than the seismic forces on the UG facilities). The design reduces the likelihood for failure of the Waste Conveyance. The Waste Hoist Support Structure requires protection as a SS control. The Waste Hoist Support Structure is credited to protect an IC of this analysis for the following events:

CH/RH-UG-10-004a	CH/RH-WHB-04-003a	CH/RH-WHB-20-002a

- **WHB Design for High Wind**. The WHB is constructed as Type II per the *Standard on Types of Building Construction* (NFPA 220), and serves as a confinement barrier to control the potential for release of hazardous and/or radioactive material. The WHB is designed and constructed to withstand the DBT with 183 mph winds and a translational velocity of 41 mph, tangential velocity of 124 mph, a maximum rotational velocity radius of 325 feet, a pressure drop of 0.5 pounds per square inch (psi) and a pressure drop rate of 0.09 psi per second. This passive DF reduces the likelihood for impacts to Waste Containers located in the WHB which could result in a loss of confinement of radiological material. The WHB, including the Hot Cell Complex and the Waste Hoist Tower, are classified as SS based on unmitigated NPH analysis performed in WIPP-019, *WIPP DSA External Event and Natural Hazard Phenomena (NHP) Event Hazard Analysis (HA) and Accident Analysis (AA) Calculations*. The WHB design for high wind conditions is credited to protect an IC of this analysis for the following events:

CH/RH-WHB-20-002a	CH/RH-WHB-21-001a	CH/RH-WHB-21-002a	CH/RH-WHB-22-001a
CH/RH-WHB-22-002a			

- **WHB Design for Noncombustible Construction and curbing**. The WHB is constructed primarily of metal and concrete with its exterior surfaces and roofing consisting of noncombustible materials and curbing extending above the floor of the WHB. This passive construction DF reduces the likelihood for small fires propagating into a large fire and also reduces the likelihood for a fire originating external to the WHB to penetrate the outer wall. The WHB Design for Noncombustible Construction and curbing requires protection as a SS control. The WHB design for low combustible construction and curbing is credited to protect an IC of this analysis for the following events:

CH/RH-WHB-04-001a	CH/RH-WHB-04-002a	CH/RH-WHB-04-003a	CH/RH-WHB-19-001a
CH/RH-WHB-20-001a	CH/RH-WHB-20-002a	CH/RH-WHB-25-001a	CH-WHB-04-001a

- **WHB Design for Roof Loading**. The roof of the WHB is designed to withstand 27 pounds per square foot (lb/ft^2) of snow load. The 100-year recurrence maximum snowpack for the WIPP region is 10 lb/ft^2. This passive DF reduces the likelihood for collapse of the WHB roof that could result in the loss of confinement of radiological material. The WHB, including the Hot Cell Complex and the Waste Hoist Tower, are classified as SS based on unmitigated NPH analysis performed in WIPP-019, *WIPP DSA External Event and Natural Hazard Phenomena (NHP) Event Hazard Analysis (HA) and Accident Analysis (AA) Calculations*. The WHB design for roof loading is credited to protect an IC of this analysis for the following event:

  CH/RH-WHB-23-001a

- **WHB Design for Seismic**. The WHB is designed and constructed to withstand the DBE with 0.1 g peak ground acceleration (PGA) and a 1,000-year return interval. The WHB, including the Hot Cell Complex, TRUDOCK Cranes, and Waste Hoist Tower, are classified as SS based on unmitigated NPH analysis performed in WIPP-019, *WIPP DSA External Event and Natural Hazard Phenomena (NHP) Event Hazard Analysis (HA) and Accident Analysis (AA) Calculations*. The WHB design for seismic activity is credited to protect an IC of this analysis for the following events:

  CH/RH-WHB-20-002a CH/RH-WHB-24-001a CH/RH-WHB-25-001a

- **WHB Design for Waste Shaft Access**. The Waste Shaft Collar area prevents direct access to the Waste Shaft. Vehicles/equipment entering the access area must make a 90 degree turn toward the Waste Shaft. The WHB Design for Waste Shaft Access requires protection as a SS control. The WHB design for Waste Shaft access is credited to protect an IC of this analysis for the following events:

  CH/RH- UG-01-005a1 CH/RH- UG-10-005a

- **Facility Cask Loading Room (FCLR), Cask Unloading Room (CUR), and Transfer Cell Shielding**. The FCLR, CUR, and Transfer Cell are constructed of thick concrete for shielding, which reduces the gamma and neutron dose rates below acceptable worker safety thresholds. This DF reduces the consequences to the facility worker when processing RH Waste Containers or events involving RH Waste outside of a Type B Shipping Package and Facility Cask/LWFC. The FCLR, CUR, and Transfer Cell shielding requires protection as a SS control. The FCLR, CUR, and Transfer Cell shielding is credited to protect an IC of this analysis for the following event:

  CH/RH-WHB-13-001a2

To determine the MOI and co-located worker radiological consequence level of each event, a quantitative assessment was performed using the Source Term (ST) “five-factor” formula presented in DOE-HDBK-3010-94, *Airborne Release Fractions/Rates and Respirable Fractions for Nonreactor Nuclear Facilities*, and a WIPP-specific calculated dose-per-unit activity released (WIPP-002, *Documented Safety Analysis (DSA) Unit Consequences Analysis*, Revision 3). The ST MAR varied by hazard evaluation event based on the postulated scenario and guidance given in DOE-STD-5506-2007. The remaining ST factors (damage ratios (DRs), airborne release fractions (ARFs), and respirable fractions (RFs) were taken directly from DOE-STD-5506-2007 and varied in general based on the postulated event scenario. A leak path factor (LPF) of 1.0 was used in all scenarios. The WIPP WAC (IC) limits the MAR per container and requires the containers to be metal and of sound integrity. The WIPP-specific dose-per-unit activity was calculated with the methodology outlined in DOE-STD-5506-2007. This semi-quantitative assessment was used to provide a basis for assigning the qualitative consequence levels presented in the hazard evaluation table (WIPP-001, WIPP-017, WIPP-018, WIPP-019, WIPP-051). These supporting calculations are considered to be part of the safety basis by reference and include basis information such as ST assumptions.

Event Discussion

The following subsections (3.3.2.3.1 through 3.3.2.3.6) provide a summary of the controls selected for each hazardous event type (e.g., fire, explosion, loss of confinement) evaluated during the hazard analysis. Each control was credited as a SS control for one or more of the events within the hazardous event type discussion. For instance, Fires could occur in the OA, the WHB, or the UG. Within an area such as the UG, fires could occur at the Waste Shaft Station, in the Waste Transport Path, or in the Waste disposal room. Additionally, a pool fire could be initiated by an impact (e.g., vehicle collision) or not (e.g., leak) or the fire could consist of ordinary combustible materials.

3.3.2.3.1 Fire Events

WIPP-023 was used in the development and evaluation of fire events. The fires addressed in this hazard analysis evaluation consisted of fuel-pool fires (DOE-STD-5506-2007, Event 1), small combustible material fires (DOE-STD-5506-2007, Event 2), small combustible material fires in the two WIPP enclosures (the Hot Cell Complex and the Shielded Container Storage Room) (DOE-STD-5506-2007, Event 3), and large fires including both fuel-pool fires and combustible fires (DOE-STD-5506-2007, Event 4). These fires are postulated to occur in the EXT, OA, WHB, and UG and are postulated to involve CH and/or RH Waste or WIPP site-derived waste. The fire events identified included fires caused by operational upsets and fires initiated inside a single Waste Container. These fires have the potential to breach Waste Containers and release sufficient HAZMAT to potentially result in serious worker injuries. Limiting inhalation and absorption of airborne contaminates is essential for worker safety. Table 3.3-9 lists the fire events that are postulated to have higher risk ranking (Risk Class I or Risk Class II) and require further evaluation to reduce the worker risk.

Thirty-seven of the fire hazard evaluation events (see Table 3.3-9) required further evaluation to reduce risk to the facility worker or co-located worker (i.e., Risk Class 1 or II). The discussion is divided into the following three subsets:

- UG fires (22 total).
- WHB fires (12 total).
- Internal container fires (3 total).

The evaluation of outside area fire events resulted in no events being Risk Class I or II to any receptor based on the closed Type B Shipping Package (IC) and the associated control for all TRU Waste outside of the WHB and above ground to be in a Type B Shipping Package.

Underground Fires

The following section provides a discussion of each preventive and mitigative control credited for one or more UG fire events followed by a discussion of each representative event(s) and the specific controls selected for risk reduction for each event. For a discussion of the credited ICs, see Section 3.3.2.3 above. The following controls require inclusion as SS controls in the TSR:

Engineered Preventers

Underground Vehicle/Equipment Automatic Fire Suppression System. UG vehicles/equipment with liquid-combustible capacity operating within the VEZ, in proximity to the CH Waste Face, between the VEZ and the CH Waste Face, or within the Waste Shaft Station when CH Waste is present, are equipped with an automatic fire suppression system that detects and suppresses developing stage fires associated

with fuel and hydraulic line leaks, thereby reducing the likelihood of fires. The UG vehicle automatic fire suppression system is credited for the following UG events:

CH/RH-UG-01-001a	CH/RH-UG-01-002a1	CH/RH-UG-01-002a2	CH/RH-UG-01-002a3
CH/RH-UG-01-004a	CH/RH-UG-01-005a2	CH/RH-UG-01-007a1	CH/RH-UG-01-007a2
CH/RH-UG-01-007a3	CH/RH-UG-01-007a4	CH/RH-UG-01-007a5	CH/RH-UG-01-007a6
CH-UG-01-001a	CH-UG-01-002a1	CH-UG-01-002a2	CH-UG-01-002a3
CH-UG-01-003a1	CH-UG-01-003a2		

Administrative Preventers

Vehicle Exclusion Zone. A VEZ, defined as the area between the leading edge of the lead escort vehicle and the trailing edge of the lag escort vehicle, and the nominal width of drift, shall be established about the TRU Waste being transported, and be maintained for the duration of the transport. Only one liquid-fueled vehicle is allowed in the VEZ unless other vehicles are required to repair the transport vehicle or to transfer the waste to another transport vehicle. This reduces the likelihood of vehicle collisions which could result in a fire event involving CH Waste. The control of the VEZ is credited for the following UG events:

CH/RH-UG-01-002a1	CH/RH-UG-01-002a2	CH/RH-UG-01-007a3	CH/RH-UG-01-007a4
CH-UG-01-001a	CH-UG-01-002a1		

Limit of Two Liquid-fueled Vehicles/Equipment in proximity to CH Waste Face. UG vehicle and equipment interactions are controlled when operating in proximity to the CH Waste Face by restricting vehicle/equipment access (e.g., emplacement, waste extraction). Limiting the number of liquid-fueled vehicles/equipment operating in proximity to the CH Waste Face reduces the likelihood for collisions as well as limiting the quantity of liquid combustibles available to be involved in a fire event. The control of the liquid-fueled vehicles/equipment in proximity to the CH Waste Face is credited for the following UG events:

CH/RH-UG-01-004a	CH-UG-01-003a1

Underground Lube Truck Prohibited from Disposal Rooms and Waste Shaft Station when Contact-Handled Waste is Present. Lube trucks are prohibited in the disposal rooms and Waste Shaft Station when CH Waste is present which prevents large pool fires involving CH Waste. Prohibiting the lube truck from entry into the disposal rooms and Waste Shaft Station when CH Waste is present reduces the likelihood for large liquid combustible fires. The control of the lube truck is credited for the following UG events:

CH/RH-UG-01-007a1	CH/RH-UG-01-007a2	CH/RH-UG-01-007a5	CH/RH-UG-01-007a6

Pre-operational Checks of Vehicles/Equipment in Proximity to Contact-Handled Waste. Waste Handling vehicles and vehicles/equipment in an active disposal room, within the VEZ, or within the Waste Shaft Station when CH Waste is present, shall have a pre-operational check prior to their use. Inspection provides assurance that the vehicle/equipment are checked for such conditions as braking, steering, leaks, and cleanliness prior to being permitted to operate near CH Waste, thereby reducing the likelihood of collisions and/or combustible liquid leaks that could lead to a fire or pool fire event. The pre-operational checks of UG vehicles/equipment in an active disposal room when CH Waste is present, within the VEZ, between the VEZ and the CH Waste Face, or within the Waste Shaft Station when CH Waste is present, when liquid-combustibles are present is credited for the following UG events:

CH/RH-UG-01-001a	CH/RH-UG-01-002a1	CH/RH-UG-01-002a2	CH/RH-UG-01-002a3
CH/RH-UG-01-004a	CH/RH-UG-01-005a2	CH/RH-UG-01-007a1	CH/RH-UG-01-007a2

CH/RH-UG-01-007a3	CH/RH-UG-01-007a4	CH/RH-UG-01-007a5	CH/RH-UG-01-007a6
CH-UG-01-001a	CH-UG-01-002a1	CH-UG-01-002a2	CH-UG-01-002a3
CH-UG-01-003a1	CH-UG-01-003a2		

Underground Liquid-fueled Vehicle/Equipment Attendance: Spotter. Liquid-fueled vehicles/equipment are Attended within the VEZ, the Waste Shaft Station when CH Waste is present, between the VEZ and the CH Waste Face, and in proximity to the CH Waste Face. Attendance of liquid-fueled vehicles/equipment provides assurance that unnecessary vehicles will be removed from the area; spotting of vehicles/equipment when operating in close proximity; and observation for indications of vehicle/equipment misoperation (e.g., leaks, steering, braking), and conditions that could lead to a fire. An Attendant is independent of vehicle/equipment operation. The attendance of liquid-fueled vehicles reduces the likelihood of vehicle collisions and/or conditions (e.g., fuel leak) that could lead to a pool fire involving CH Waste. The attendance of these liquid-fueled vehicles/equipment is credited for the following UG events:

CH/RH-UG-01-001a	CH/RH-UG-01-002a1	CH/RH-UG-01-002a2	CH/RH-UG-01-002a3
CH/RH-UG-01-004a	CH/RH-UG-01-005a2	CH/RH-UG-01-007a1	CH/RH-UG-01-007a2
CH/RH-UG-01-007a3	CH/RH-UG-01-007a4	CH/RH-UG-01-007a5	CH/RH-UG-01-007a6
CH-UG-01-001a	CH-UG-01-002a1	CH-UG-01-002a2	CH-UG-01-002a3
CH-UG-01-003a1	CH-UG-01-003a2		

Waste Handling Program: Waste Conveyance Control. The Waste Shaft Conveyance is required to be present at the Waste Shaft Collar prior to waste entering the Waste Shaft Collar Room. Once the Waste Shaft Conveyance is loaded with waste, the Waste Shaft Access doors shall be closed and remain closed while waste is present in the Waste Shaft; and the Waste Shaft Conveyance shall remain present at the Waste Shaft Station until the waste load is moving away from the Waste Shaft. Additionally, the Waste Shaft Conveyance shall be present at the Waste Shaft Station prior to bringing TRU Waste into the station for uploading. This reduces the likelihood for vehicles, equipment, and/or loads to drop down an open Waste Shaft into the shaft sump. The presence of the Waste Conveyance while TRU Waste is present is credited for the following UG events:

CH/RH-UG-01-005a1	CH/RH-UG-01-005a2

Aboveground Liquid-Fueled Vehicles/Equipment Prohibition. Liquid-fueled vehicles/equipment are prevented from entering the Waste Shaft Access Area when CH Waste is present. This control reduces the likelihood of a pool fire occurring in the presence of CH Waste by removing a likely source of liquid fuel. The prohibition of aboveground liquid-fueled vehicles/equipment in the Waste Shaft Access Area was credited for the following UG event:

CH/RH-UG-01-005a1

Engineered Mitigators

Facility Pallet. The facility pallet provides shielding of CH Waste Containers from direct flame impingement. This reduces the consequences to all receptors by ensuring that CH Waste Containers remain intact (e.g., no lid loss with waste ejection) and therefore, the ARF/RF factors are lower as compared to unconfined burning ARF/RFs. The facility pallet is credited for the following UG events:

CH/RH-UG-01-002a2	CH/RH-UG-01-007a4	CH/RH-UG-01-007a6	CH-UG-01-001a
CH-UG-01-002a3			

Underground Ventilation Filtration System / Interim Ventilation System. The UVFS/IVS provides HEPA filtration of UG exhaust air. This system also draws potential airborne contamination away from

normally occupied locations in the UG. These features reduce the consequences to the co-located worker (HEPA filtration) and reduce the consequences to the facility worker by drawing contamination away from normally occupied areas of the UG. The UVFS/IVS is credited for the following UG events:

CH/RH-UG-01-001a	CH/RH-UG-02-002a1	CH/RH-UG-02-002a2	CH/RH-UG-02-002a3
CH-UG-01-003a2			

Administrative Mitigators

Underground Liquid-fueled Vehicle/Equipment Attendance: Notification. Liquid-fueled vehicles/equipment are Attended in the VEZ, the Waste Shaft Station when CH Waste is present, and the active disposal room. Attendance of liquid-fueled vehicles/equipment provides assurance that reasonable mitigative action is taken and UG facility workers are notified in the event of a need to take precautions such as evacuation. An Attendant is independent of vehicle/equipment operations. This control applies to the Waste Shaft Station when CH Waste is present, within the VEZ, between the VEZ and the CH Waste Face, and in proximity to the CH Waste Face. The attendance of liquid-fueled vehicles/ equipment is credited for the following UG events:

CH/RH-UG-01-001a	CH/RH-UG-01-002a2	CH/RH-UG-01-007a4	CH/RH-UG-01-007a6
CH/RH-UG-02-001a	CH/RH-UG-02-002a2	CH/RH-UG-02-002a3	CH-UG-01-001
CH-UG-01-002a3	CH-UG-01-003a2		

Underground Fire Event Descriptions

Pool Fire in a Waste Disposal Room

Events CH/RH-UG-01-001a (CH or RH) and CH-UG-01-003a2 (CH only) are representative events for a pool fire at the CH Waste Face resulting from ignition of a liquid-combustible (e.g., vehicle fuel system leak). The IC of the RH Facility Cask/LWFC limits the RH contribution to the event consequences and the WIPP WAC IC ensures the waste constituency and its confinement within a metal container of sound integrity. The MAR involved in either event is the CH disposal array and in CH/RH-UG-01-001a, an additional RH Waste Canister. A leak resulting in pool formation and ignition results in an unmitigated frequency of Anticipated with High radiological dose consequences to the facility worker and co-located worker due to the CH Waste, and Low for the MOI. Therefore, these two unmitigated events are Risk Class I for the facility worker and co-located worker, and III for the MOI.

The preventive engineered feature of the automatic fire suppression system on Waste Handling vehicles/equipment in the Waste Shaft Station reduces the event frequency to Unlikely. The ACs for pre-operational checks of vehicles/equipment in proximity to the CH Waste Face, and the required attendance of vehicles/equipment with liquid-combustible capacity when operating in proximity to the CH Waste Face, reduces the likelihood for the event to Extremely Unlikely (1/2 frequency bin each). The individual attending vehicles/ equipment in proximity to the CH Waste Face is responsible for spotting of vehicles/equipment when operating in close proximity, observation for indications of vehicle/equipment misoperation (e.g., leaks, steering, braking), and conditions that could lead to a fire. In accordance with WIPP-023, UG workers are trained to extinguish developing fires, and DSA Chapter 12.0, “Procedures and Training,” states that employees are expected to evaluate and respond to developing stage fires only with portable fire extinguishers, if they have been trained to use the extinguishers and feel safe in doing so. Therefore, the mitigated frequency of this event is Extremely Unlikely.

Combustible liquid pools formed due to leaking equipment are limited in size since in the absence of a collision the leak would be small and allow for detection during pre-operational inspections or by the Attendant, and therefore, mitigation of such events is comparable to mitigating ordinary combustible

fires. Due to the limited size of the fuel pool, as determined by fire hazard analysis, the quantity of particulate released by burning of the small quantity of combustible liquid would be similar to the smoke loading released by an ordinary combustible fire. Vehicles/equipment are preoperationally inspected specifically for leakage prior to being used in proximity to CH Waste and the vehicle/equipment is attended while present to observe for signs of leakage and to take action to remove the vehicle/equipment and/or prevent the formation of a large combustible liquid pool. Therefore, event radiological consequence mitigation is provided by the active engineered feature of the UVFS/IVS that reduces radiological dose consequences to the co-located worker to Low. The UVFS/IVS also reduces radiological dose consequences to the facility worker by drawing the airflow in the UG toward the exhaust point. The Attendant notifies fellow UG facility workers and the CMR in the event of a potential radiological release. Facility workers in the disposal room would egress toward the Waste Shaft Station which is upwind of the disposal room where the event occurs. Other UG facility workers, if any, would be upwind of the event and be notified of any appropriate response by the Attendant or announcement in the UG. This action in combination with the airflow direction reduces the radiological dose consequences to the facility worker to Low. Therefore, the facility worker and co-located worker consequences are reduced to Low and the MOI consequences remain Low.

Thus, this suite of controls reduces the risk for the facility worker, co-located worker, and MOI to Risk Classification IV.

Vehicle Collision with Pool Fire in a Waste Disposal Room

Events CH/RH-UG-01-004a (CH and RH) and CH-UG-01-003a1 (CH only) are representative events for a pool fire at the CH Waste Face resulting from a collision involving a vehicle and/or equipment. The MAR involved in either event is the CH Disposal Array and in CH/RH-UG-01-004a, an additional RH Waste Canister. The IC of the RH Facility Cask/LWFC limits the RH contribution to the event consequences and the WIPP WAC IC ensures the waste constituency and its confinement within a metal container of sound integrity. A collision event with subsequent pool formation and ignition results in an unmitigated frequency of Unlikely with High radiological dose consequences to the facility worker and co-located worker due to the CH Waste, and Low for the MOI. Therefore, these two unmitigated events are Risk Class I for the facility worker and co-located worker, and III for the MOI.

The preventive engineered feature of an automatic fire suppression system on Waste Handling vehicles/ equipment and UG non-Waste Handling vehicles or equipment in proximity to the CH Waste Face, reduces the event frequency to Extremely Unlikely. The ACs for pre-operational checks of vehicles/ equipment in proximity to the CH Waste Face, and the required attendance of vehicles/equipment with liquid-combustible capacity when operating in proximity to the CH Waste Face, reduces the likelihood for the event to Beyond Extremely Unlikely (1/2 frequency bin each). The additional preventive administrative feature of limiting the number of vehicles/equipment in proximity to the CH Waste Face is credited; however, no additional frequency bin reduction is applied. The individual attending the area where vehicles/equipment are present is responsible for spotting of vehicles/equipment when operating in close proximity, observation for indications of vehicle/equipment misoperation (e.g., leaks, steering, braking), and conditions that could lead to a fire. In accordance with WIPP-023, UG workers are trained to extinguish developing stage fires, and DSA Chapter 12.0, “Procedures and Training,” states that employees are expected to evaluate and respond to developing stage fires only with portable fire extinguishers, if they have been trained to use the extinguishers and feel safe in doing so. Therefore, the mitigated frequency of this event is Beyond Extremely Unlikely.

No engineered or administrative mitigative controls were selected for risk reduction. Therefore, event consequences remain High to the facility worker and co-located worker, and Low to the MOI.

Thus, this suite of controls reduces the risk classification for the facility worker and co-located worker to III, and IV for the MOI.

Lube Truck Collision with Pool Fire in a Waste Disposal Room

Event CH/RH-UG-01-007a1 is the representative event for a pool fire at the Waste Face resulting from a lube truck collision. The MAR involved in the event is the CH Disposal Array or an RH Waste Cask. The IC of the RH Facility Cask/LWFC limits the RH contribution to the event consequences and the WIPP WAC IC ensures the waste constituency and its confinement within a metal container of sound integrity. A collision event with subsequent pool formation and ignition results in an unmitigated frequency of Unlikely with High radiological dose consequences to the facility worker and co-located worker, and Low for the MOI. Therefore, this unmitigated event is Risk Class I for the facility worker and co-located worker due to the CH Waste, and III for the MOI.

The preventive engineered feature of an automatic fire suppression system on the lube truck reduces the event frequency to Extremely Unlikely. The ACs for prohibiting the lube truck from entry into an active disposal room, and pre-operational checks of vehicles/equipment in proximity to the CH Waste Face, reduces the likelihood for the event to Beyond Extremely Unlikely (1/2 frequency bin each). The additional preventive administrative feature of required attendance of vehicles/equipment with liquid-combustible capacity when operating in proximity to the CH Waste Face is credited; however, no additional frequency bin reduction is applied. The individual attending the area where vehicles/equipment are present is responsible for spotting of vehicles/equipment when operating in close proximity to CH Waste, observation for indications of vehicle/equipment misoperation (e.g., leaks, steering, braking), and conditions that could lead to a fire. In accordance with WIPP-023, UG workers are trained to extinguish developing stage fires, and DSA Chapter 12.0, “Procedures and Training,” states that employees are expected to evaluate and respond to developing stage fires only with portable fire extinguishers, if they have been trained to use the extinguishers and feel safe in doing so. Therefore, the mitigated frequency of this event is Beyond Extremely Unlikely.

No engineered or administrative mitigative controls were selected for risk reduction. Therefore, event consequences remain High to the facility worker and co-located worker, and Low to the MOI.

Thus, this suite of controls reduces the risk classification for the facility worker and co-located worker to III, and IV for the MOI.

Lube Truck Leak with Pool Fire in a Waste Disposal Room

Event CH/RH-UG-01-007a2 is the representative event for a pool fire at the CH Waste Face resulting from the leak from the lube truck. The MAR involved in the event is the CH Disposal Array. The IC of the RH Facility Cask/LWFC limits the RH contribution to the event consequences and the WIPP WAC IC ensures the waste constituency and its confinement within a metal container of sound integrity. A leak resulting in pool formation and ignition results in an unmitigated frequency of Anticipated with High radiological dose consequences to the facility worker and co-located worker due to the CH Waste, and Low for the MOI. Therefore, this unmitigated event is Risk Class I for the facility worker and co-located worker, and III for the MOI.

The preventive engineered feature of the automatic fire suppression system on the Lube Truck in the Waste Shaft Station reduces the event frequency to Unlikely. The preventive AC of prohibiting the Lube Truck from operation in proximity to the CH Waste Face is considered to provide a full bin of frequency reduction; thereby, reducing the mitigated frequency to Extremely Unlikely. The ACs of pre-operational checks of vehicles/equipment in proximity to the CH Waste Face and the required attendance of

vehicles/equipment with liquid-combustible capacity when operating in proximity to the CH Waste Face further reduces the likelihood for the event to Beyond Extremely Unlikely (1/2 frequency bin each). The individual attending the area where vehicles/equipment are present is responsible for spotting of vehicles/equipment when operating in close proximity, observation for indications of vehicle/equipment misoperation (e.g., leaks, steering, braking), and conditions that could lead to a fire. In accordance with WIPP-023, UG workers are trained to extinguish developing stage fires, and DSA Chapter 12.0, "Procedures and Training," states that employees are expected to evaluate and respond to developing stage fires only with portable fire extinguishers, if they have been trained to use the extinguishers and feel safe in doing so. Therefore, the mitigated frequency of this event is Beyond Extremely Unlikely.

No engineered or administrative mitigative controls were selected for risk reduction. Therefore, event consequences remain High to the facility worker and co-located worker, and Low to the MOI.

Thus, this suite of controls reduces the risk classification for the facility and co-located workers to III, and IV for the MOI.

Ordinary Combustible Fire in a Waste Disposal Room

Event CH/RH-UG-02-002a1 is the representative event for an ordinary combustible fire or a small combustible liquid pool fire (e.g., vehicle/equipment leak) in a disposal room. Vehicles/equipment are required to be inspected prior to use in proximity to CH Waste and to be attended when in proximity to CH Waste. Due to the specific inspection of vehicles/equipment for leaks and the presence of a continuous observer, any leakage would only result in a small liquid pool that if ignited, would not challenge the capability of the UVFS/IVS. The IC of the RH Facility Cask/LWFC limits the RH contribution to the event consequences and the WIPP WAC IC ensures the waste constituency and its confinement within a metal container of sound integrity. The MAR involved in the event is four CH Waste assemblies or an RH Waste Canister. The CH Waste is the bounding MAR. The unmitigated frequency is Anticipated with High radiological dose consequences to the facility worker, Moderate for the co-located worker, and Low for the MOI. Therefore, this unmitigated event is Risk Classification I for the facility worker, II for the co-located worker, and III for the MOI.

There are no preventive engineered or administrative features credited for this event. Under the Fire Protection Program (FPP), general housekeeping and combustible controls (see Chapter 11.0, "Operational Safety") are in place; however, the event frequency remains Anticipated.

Event radiological consequence mitigation is provided by the active engineered feature of the UVFS/IVS that reduces radiological dose consequences to the co-located worker to Low. In accordance with DOE-STD-3009-2014, Section A.8, SSCs that are mitigative and active are preferred over ACs that are preventive. Additionally, ACs such as combustible loading and/or hot work were considered; however, the combination of these would not reduce the Risk Classification of this event. If facility workers are present in the disposal room, they would attempt to suppress the developing stage fire and evacuate toward the Waste Shaft; thereby, lowering their consequences to Low. The UVFS/IVS would draw the air toward the exhaust point which would lower consequences to UG facility workers not in the disposal room. Therefore, the facility worker and co-located worker consequences are reduced to Low and the MOI consequences remain Low.

Thus, this suite of controls reduces the risk for the facility worker, co-located worker, and MOI to Risk Classification III.

Vehicle Collision with Pool Fire in the Vehicle Exclusion Zone

Events CH/RH-UG-01-002a1 (CH or RH) and CH-UG-01-002a1 (CH only) are representative events for a pool fire in the VEZ resulting from the collision involving a vehicle and/or equipment. The MAR involved in the event involves a loaded CH facility pallet on one vehicle and either a loaded CH facility pallet on the other or an RH Waste Cask. The IC of the RH Facility Cask/LWFC limits the RH contribution to the CH/RH event consequences and the WIPP WAC IC ensures the waste constituency and its confinement within a metal container of sound integrity. The two CH facility pallets are the bounding MAR. A collision event with subsequent pool formation and ignition results in an unmitigated frequency of Unlikely with High radiological dose consequences to the facility worker and co-located worker due to the CH Waste, and Low for the MOI. Therefore, these two unmitigated events are Risk Class I for the facility worker and co-located worker and III for the MOI.

The preventive engineered feature of the automatic fire suppression system on Waste Handling vehicles/ equipment in the VEZ, reduces the event frequency to Extremely Unlikely. The ACs for pre-operational checks of vehicles/equipment within the VEZ, and control of the VEZ reduces the likelihood for the event to Beyond Extremely Unlikely (1/2 frequency bin each). Additionally, the required attendance of the Waste Handling vehicle in the VEZ reduces the likelihood for adverse conditions although no further frequency reduction is applied. The individual attending the vehicle in the VEZ is responsible for spotting of vehicles/equipment when operating in close proximity, observation for indications of vehicle/ equipment misoperation (e.g., leaks, steering, braking), and conditions that could lead to a fire. In accordance with WIPP-023, UG workers are trained to extinguish developing stage fires, and DSA Chapter 12.0, “Procedures and Training,” states that employees are expected to evaluate and respond to developing stage fires only with portable fire extinguishers, if they have been trained to use the extinguishers and feel safe in doing so. Therefore, the mitigated frequency of this event is Beyond Extremely Unlikely.

No engineered or administrative mitigative controls were selected for risk reduction. Therefore, event consequences remain High to the facility worker and co-located worker, and Low to the MOI.

Thus, this suite of controls reduces the risk classification for the facility worker and co-located worker to III, and IV for the MOI.

Pool Fire in the Vehicle Exclusion Zone

Events CH/RH-UG-01-002a2 (CH or RH) and CH-UG-01-001a (CH only) are representative events for a pool fire in the Waste Transport Path resulting from the ignition of a liquid-fuel pool (e.g., vehicle fuel system leak). The IC of the RH Facility Cask/LWFC limits the RH contribution to the event consequences and the WIPP WAC IC ensures the waste constituency and its confinement within a metal container of sound integrity. The MAR involved in the event involves a loaded CH facility pallet or an RH Waste Cask. The CH facility pallet is the bounding MAR. A leak resulting in pool formation and ignition results in an unmitigated frequency of Anticipated with High radiological dose consequences to the facility worker and co-located worker due to the CH Waste, and Low for the MOI. Therefore, these two unmitigated events are Risk Class I for the facility worker and co-located worker, and III for the MOI.

The preventive engineered feature of the automatic fire suppression system on Waste Handling vehicles/ equipment in the VEZ reduces the event frequency to Unlikely. The ACs for pre-operational checks of vehicles/equipment within the VEZ, and control of the VEZ, reduce the likelihood for the event to Extremely Unlikely (1/2 frequency bin each). Additionally, the required attendance of the Waste Handling vehicle in the VEZ reduces the likelihood for adverse conditions although no further frequency

reduction is applied. The individual attending the Waste Handling vehicle in the VEZ is responsible for spotting of vehicles/equipment when operating in close proximity, observation for indications of vehicle/equipment misoperation (e.g., leaks, steering, braking), and conditions that could lead to a fire. In accordance with WIPP-023, UG workers are trained to extinguish developing stage fires, and DSA Chapter 12.0, "Procedures and Training," states that employees are expected to evaluate and respond to developing stage fires only with portable fire extinguishers, if they have been trained to use the extinguishers and feel safe in doing so. Therefore, the mitigated frequency of this event is Extremely Unlikely.

Event radiological consequence mitigation is provided by the passive engineered feature of the facility pallet that reduces radiological dose consequences to the co-located worker to Moderate. Additionally, the Attendant notifies fellow UG facility workers and the CMR in the event of a potential radiological release. UG facility workers would egress toward an exit point. This action in combination with the airflow direction toward the exhaust point reduces the radiological dose consequences to the facility worker to Low. No additional mitigative administrative features are selected for additional risk reduction. Therefore, event consequences are Low to the facility worker, Moderate to the co-located worker, and Low to the MOI.

Thus, this suite of controls reduces the risk classification for the facility worker to IV, the co-located worker to III, and the MOI to IV.

Lube Truck Collision with Pool Fire in the Vehicle Exclusion Zone

Event CH/RH-UG-01-007a3 is the representative event for a pool fire in the VEZ resulting from a lube truck collision with a waste transport vehicle. The MAR involved in the event is a CH facility pallet or an RH Waste Cask with the facility pallet being the bounding MAR. The IC of the RH Facility Cask/LWFC limits the RH contribution to the event consequences and the WIPP WAC IC ensures the waste constituency and its confinement within a metal container of sound integrity. A collision event with subsequent pool formation and ignition results in an unmitigated frequency of Unlikely with High radiological dose consequences to the facility worker and co-located worker due to the CH Waste, and Low for the MOI. Therefore, this unmitigated event is Risk Class I for the facility worker and co-located worker, and III for the MOI.

The preventive engineered feature of the automatic fire suppression system on Waste Handling vehicles/equipment in the VEZ and on the UG lube truck reduces the event frequency to Extremely Unlikely. The ACs for pre-operational checks of vehicles/equipment within the VEZ, and control of the VEZ reduces the likelihood for the event to Beyond Extremely Unlikely (1/2 frequency bin each). Additionally, the required attendance of the Waste Handling vehicle in the VEZ reduces the likelihood for adverse conditions although no further frequency reduction is applied. The individual attending the Waste Handling vehicle in the VEZ is responsible for spotting of vehicles/equipment when operating in close proximity, observation for indications of vehicle/equipment misoperation (e.g., leaks, steering, braking), and conditions that could lead to a fire. In accordance with WIPP-023, UG workers are trained to extinguish developing stage fires, and DSA Chapter 12.0, "Procedures and Training," states that employees are expected to evaluate and respond to developing stage fires only with portable fire extinguishers, if they have been trained to use the extinguishers and feel safe in doing so. Therefore, the mitigated frequency of this event is Beyond Extremely Unlikely.

No engineered or administrative mitigative controls are selected for risk reduction. Therefore, event consequences remain High to the facility worker and co-located worker, and Low to the MOI.

Thus, this suite of controls reduces the risk classification for the facility worker and co-located worker to III, and IV for the MOI.

Lube Truck Pool Fire in the Vehicle Exclusion Zone

Event CH/RH-UG-01-007a4 is a representative event for a pool fire in the VEZ resulting from a lube truck leak. The IC of the RH Facility Cask/LWFC limits the RH contribution to the event consequences and the WIPP WAC IC ensures the waste constituency and its confinement within a metal container of sound integrity. The MAR involved in the event is a CH facility pallet or an RH Waste Cask with the facility pallet being the bounding MAR. A leak resulting in pool formation and ignition results in an unmitigated frequency of Anticipated with High radiological dose consequences to the facility worker and co-located worker due to CH Waste, and Low for the MOI. Therefore, this event is Risk Class I for the facility worker and co-located worker, and III for the MOI.

The preventive engineered feature of the automatic fire suppression system on Waste Handling vehicles/ equipment in the VEZ and on the UG lube truck reduces the event frequency to Unlikely. The ACs for pre-operational checks of vehicles/equipment within the VEZ, and control of the VEZ, reduce the likelihood for the event to Extremely Unlikely (1/2 frequency bin each). Additionally, the required attendance of the Waste Handling vehicle in the VEZ reduces the likelihood for adverse conditions although no further frequency reduction is applied. The individual attending the Waste Handling vehicle in the VEZ is responsible for spotting of vehicles/equipment when operating in close proximity, observation for indications of vehicle/equipment misoperation (e.g., leaks, steering, braking), and conditions that could lead to a fire. In accordance with WIPP-023, UG workers are trained to extinguish developing stage fires, and DSA Chapter 12.0, “Procedures and Training,” states that employees are expected to evaluate and respond to developing stage fires only with portable fire extinguishers, if they have been trained to use the extinguishers and feel safe in doing so. Therefore, the mitigated frequency of this event is Extremely Unlikely.

Event radiological consequence mitigation is provided by the passive engineered feature of the facility pallet that reduces radiological dose consequences to the co-located worker to Moderate. Additionally, the Attendant notifies fellow UG facility workers and the CMR in the event of a potential radiological release. UG facility workers would egress toward an exit point. This action in combination with the airflow direction toward the exhaust point reduces the radiological dose consequences to the facility worker to Low. No additional mitigative administrative features are selected for additional risk reduction. Therefore, event consequences are Low to the facility worker, Moderate to the co-located worker, and Low to the MOI.

Thus, this suite of controls reduces the risk classification for the facility worker to IV, the co-located worker to III, and the MOI to IV.

Ordinary Combustible Fire in the Vehicle Exclusion Zone

Event CH/RH-UG-02-002a2 is the representative event for an ordinary combustible fire or a small combustible liquid pool fire (e.g., vehicle/equipment leak) in the VEZ. Vehicles/equipment are required to be inspected prior to use in proximity to CH Waste and to be attended when in proximity to CH Waste. Due to the specific inspection of vehicles/equipment for leaks and the presence of a continuous observer, any leakage would only result in a small liquid pool that if ignited, would not challenge the capability of the UVFS/IVS. The IC of the RH Facility Cask/LWFC limits the RH contribution to the event consequences and the WIPP WAC IC ensures the waste constituency and its confinement within a metal container of sound integrity. The MAR involved in the event is one CH facility pallet or an RH Waste Canister. The CH Waste is the bounding MAR. Ordinary combustible fires are slow to develop, the at-

scene facility workers would have the opportunity to extinguish the fire before it fully develops, and/or to exit the fire scene thereby, keeping their consequences Low. The unmitigated frequency is Anticipated with High radiological dose consequences to the facility worker, Moderate for the co-located worker, and Low for the MOI. Therefore, this unmitigated event is Risk Classification I for the facility worker, II for the co-located worker, and III for the MOI.

There are no preventive engineered or administrative features credited for this event. Under the FPP, general housekeeping and combustible controls (see Chapter 11.0, “Operational Safety”) are in place; however, the event mitigated frequency remains Anticipated.

Event radiological consequence mitigation is provided by the active engineered feature of the UVFS/IVS that reduces radiological dose consequences to the co-located worker to Low. In accordance with DOE-STD-3009-2014, Section A.8, SSCs that are mitigative and active are preferred over ACs that are preventive. Additionally, ACs such as combustible loading and/or hot work were considered; however, the combination of these would not reduce the Risk Classification of this event. The Attendant notifies fellow UG facility workers and the CMR in the event of a potential radiological release. Upon notification, UG facility workers would egress toward the Waste Shaft Station. This action in combination with the airflow direction toward the exhaust point reduces the radiological dose consequences to the facility worker to Low. Therefore, event consequences are reduced to Low for all receptors.

Thus, this suite of controls reduces the risk for the facility worker, co-located worker, and MOI to Risk Classification III.

Vehicle Collision with Pool Fire at the Waste Shaft Station

Events CH/RH-UG-01-002a3 (CH or RH) and CH-UG-01-002a2 (CH only) are representative events for a pool fire at the Waste Shaft Station resulting from a collision involving a vehicle/equipment. The MAR involved in the event involves a loaded CH facility pallet or an RH Waste Cask. The IC of the RH Facility Cask/LWFC limits the RH contribution to the event consequences and the WIPP WAC IC ensures the waste constituency and its confinement within a metal container of sound integrity. The CH facility pallet is the bounding MAR. A collision event with subsequent pool formation and ignition results in an unmitigated frequency of Unlikely with High radiological dose consequences to the facility worker and co-located worker due to the CH Waste, and Low for the MOI. Therefore, these two unmitigated events are Risk Class I for the facility worker and co-located worker, and III for the MOI.

The preventive engineered feature of the automatic fire suppression system on Waste Handling vehicles/ equipment in the Waste Shaft Station reduces the event frequency to Extremely Unlikely. The ACs for pre-operational checks of vehicles/equipment within the Waste Shaft Station, and the required attendance of the vehicles/equipment in the Waste Shaft Station, reduces the likelihood for adverse conditions to Beyond Extremely Unlikely. The individual attending the vehicles/equipment in the Waste Shaft Station is responsible for spotting of vehicles/equipment when operating in close proximity, observation for indications of vehicle/ equipment misoperation (e.g., leaks, steering, braking), and conditions that could lead to a fire. In accordance with WIPP-023, UG workers are trained to extinguish developing stage fires, and DSA Chapter 12.0, “Procedures and Training,” states that employees are expected to evaluate and respond to developing stage fires only with portable fire extinguishers, if they have been trained to use the extinguishers and feel safe in doing so. Therefore, the mitigated frequency of this event is Beyond Extremely Unlikely.

No engineered or administrative mitigative controls are selected for risk reduction. Therefore, event consequences remain High to the facility worker and co-located worker, and Low to the MOI.

Thus, this suite of controls reduces the risk classification for the facility worker and co-located worker to III, and IV for the MOI.

Pool Fire at the Waste Shaft Station

Event CH-UG-01-002a3 is the representative event for a pool fire at the Waste Shaft Station resulting from the ignition of a liquid-fuel with CH Waste present. The WIPP WAC IC ensures the waste constituency and its confinement within a metal container of sound integrity. The MAR involved in the event involves a loaded CH facility pallet. A leak resulting in pool formation and ignition results in an unmitigated frequency of Anticipated with High radiological dose consequences to the facility worker and co-located worker, and Low for the MOI. Therefore, this event is Risk Class I for the facility worker and co-located worker and III for the MOI.

The preventive engineered feature of the automatic fire suppression system on Waste Handling vehicles/equipment in the Waste Shaft Station reduces the event frequency to Unlikely. The ACs for pre-operational checks of vehicles/equipment within the Waste Shaft Station, and the required attendance of the vehicles/equipment in the Waste Shaft Station, reduces the likelihood for adverse conditions to Extremely Unlikely. The individual attending the vehicles/equipment in the Waste Shaft Station is responsible for spotting of vehicles/equipment when operating in close proximity, observation for indications of vehicle/equipment misoperation (e.g., leaks, steering, braking), and conditions that could lead to a fire. In accordance with WIPP-023, UG workers are trained to extinguish developing stage fires, and DSA Chapter 12.0, “Procedures and Training,” states that employees are expected to evaluate and respond to developing stage fires only with portable fire extinguishers, if they have been trained to use the extinguishers and feel safe in doing so. Therefore, the mitigated frequency of this event is Extremely Unlikely.

Event radiological consequence mitigation is provided by the passive engineered feature of the facility pallet that reduces radiological dose consequences to the co-located worker to Moderate. Additionally, the Attendant notifies fellow UG facility workers and the CMR in the event of a potential radiological release. UG facility workers would egress toward an alternate exit point. This action in combination with the airflow direction toward the exhaust point reduces the radiological dose consequences to the facility worker to Low. No additional mitigative administrative features are selected for additional risk reduction. Therefore, event consequences are Low to the facility worker, Moderate to the co-located worker, and Low to the MOI.

Thus, this suite of controls reduces the risk classification for the facility worker to IV, the co-located worker to III, and the MOI to IV.

Lube Truck Collision with Pool Fire in the Waste Shaft Station

Event CH/RH-UG-01-007a5 is the representative event for a pool fire in the Waste Shaft Station resulting from a lube truck collision with a waste transport vehicle. The MAR involved in the event is a CH facility pallet or an RH Waste Cask with the facility pallet being the bounding MAR. The IC of the RH Facility Cask/LWFC limits the RH contribution to the event consequences and the WIPP WAC IC ensures the waste constituency and its confinement within a metal container of sound integrity. A collision event with subsequent pool formation and ignition results in an unmitigated frequency of Unlikely with High radiological dose consequences to the facility worker and co-located worker due to the CH Waste, and Low for the MOI. Therefore, this unmitigated event is Risk Class I for the facility worker and co-located worker, and III for the MOI.

The preventive engineered feature of the automatic fire suppression system on the lube truck reduces the event frequency to Extremely Unlikely. The ACs for prohibiting the lube truck from entry into the Waste Shaft Station when CH Waste is present, and pre-operational checks of vehicles/equipment within the Waste Shaft Station, reduces the likelihood for the event to Beyond Extremely Unlikely (1/2 frequency bin each). The additional preventive administrative feature of required attendance of vehicles/equipment in the Waste Shaft Station when CH Waste is present is credited; however, no additional frequency bin reduction is applied. The individual attending the vehicles/equipment in the Waste Shaft Station is responsible for spotting of vehicles/equipment when operating in close proximity, observation for indications of vehicle/equipment misoperation (e.g., leaks, steering, braking), and conditions that could lead to a fire. In accordance with WIPP-023, UG workers are trained to extinguish developing stage fires, and DSA Chapter 12.0, "Procedures and Training," states that employees are expected to evaluate and respond to developing stage fires only with portable fire extinguishers, if they have been trained to use the extinguishers and feel safe in doing so. Therefore, the mitigated frequency of this event is Beyond Extremely Unlikely.

No engineered or administrative mitigative controls are selected for risk reduction. Therefore, event consequences remain High to the facility worker and co-located worker, and Low to the MOI.

Thus, this suite of controls reduces the risk classification for the facility worker and co-located worker to III, and IV for the MOI.

Lube Truck Pool Fire in the Waste Shaft Station

Event CH/RH-UG-01-007a6 is a representative event for a pool fire in the Waste Shaft Station resulting from a lube truck leak. The IC of the RH Facility Cask/LWFC limits the RH contribution to the event consequences and the WIPP WAC IC ensures the waste constituency and its confinement within a metal container of sound integrity. The MAR involved in the event is a CH facility pallet or an RH Waste Cask with the facility pallet being the bounding MAR. A leak resulting in pool formation and ignition results in an unmitigated frequency of Anticipated with High radiological dose consequences to the facility worker and co-located worker due to CH Waste, and Low for the MOI. Therefore, this event is Risk Class I for the facility worker and co-located worker, and III for the MOI.

The preventive engineered feature of the automatic fire suppression system on the lube truck reduces the event frequency to Unlikely. The ACs for prohibiting the lube truck from entry into the Waste Shaft Station when CH Waste is present, and pre-operational checks of vehicles/equipment within the Waste Shaft Station, reduces the likelihood for the event to Extremely Unlikely (1/2 frequency bin each). The additional preventive administrative feature of required attendance of the vehicles/equipment in the Waste Shaft Station when CH Waste is present is credited; however, no additional frequency bin reduction is applied. The individual attending the vehicles/equipment in the Waste Shaft Station is responsible for spotting of vehicles/equipment when operating in close proximity, observation for indications of vehicle/equipment misoperation (e.g., leaks, steering, braking), and conditions that could lead to a fire. In accordance with WIPP-023, UG workers are trained to extinguish developing stage fires, and DSA Chapter 12.0, "Procedures and Training," states that employees are expected to evaluate and respond to developing stage fires only with portable fire extinguishers, if they have been trained to use the extinguishers and feel safe in doing so. Therefore, the mitigated frequency of this event is Extremely Unlikely.

Event radiological consequence mitigation is provided by the passive engineered feature of the facility pallet that reduces radiological dose consequences to the co-located worker to Moderate. Additionally, the Attendant notifies fellow UG facility workers and the CMR in the event of a potential radiological release. UG facility workers would egress toward an alternate exit point. This action in combination with

the airflow direction toward the exhaust point reduces the radiological dose consequences to the facility worker to Low. No additional mitigative administrative features are selected for additional risk reduction. Therefore, event consequences are Low to the facility worker, Moderate to the co-located worker, and Low to the MOI.

Thus, this suite of controls reduces the risk classification for the facility worker to IV, the co-located worker to III, and the MOI to IV.

Pool Fire at the Waste Shaft Station due to drop of liquid-fuel source from the Waste Collar

Event CH/RH-UG-01-005a1 is the representative event for a pool fire at the Waste Shaft Station resulting from the drop of liquid-fuel (e.g., forklift, forklift with 300 gallon diesel tank) down the Waste Shaft. The MAR involved in the event involves a loaded CH facility pallet or an RH Waste Cask. The CH facility pallet is the bounding MAR. The IC of the RH Facility Cask/LWFC limits the RH contribution to the event consequences; the WIPP WAC IC ensures the waste constituency and its confinement within a metal container of sound integrity, and the Waste Shaft Access Configuration IC that prevents direct access to the Waste Shaft. An inadvertent drop of a liquid-fuel source onto a loaded Waste Conveyance, pool formation, and ignition results in an unmitigated frequency of Extremely Unlikely with High radiological dose consequences to the facility worker and co-located worker, and Moderate for the MOI. The Extremely Unlikely determination is due to the additional Waste Shaft Access Configuration IC that prevents direct access to the Waste Shaft. This event is conservatively evaluated as an Extremely Unlikely event although, in addition to the credited control, multiple features such as the shaft access doors, fences, and upended rails protect entry to the Waste Shaft Collar. When downloading waste, liquid-fueled vehicles and equipment are not allowed in the CLR, and once the Waste Conveyance is loaded, the Conveyance Loading Car is removed from the conveyance, the chain link gate at the Waste Shaft is closed, and Door 156 is closed prior to lowering the conveyance, and the door remains closed until the conveyance is off-loaded at the Waste Shaft Station. The process deviation to result in this event would consist of a sequence of many unlikely human actions or errors for which there is no reason or motive. In the event that a vehicle and/or equipment managed entry into the Waste Shaft while a loaded Waste Conveyance was present, the fall of the object would be attenuated through intermittent contact with the shaft, any liquid would be disbursed, and the substantial metal structure of the Waste Conveyance itself would prevent or significantly limit any damage to the Waste Containers themselves. Impact of the Waste Containers is considered to be a high-speed crush and the dispersal of liquid fuel during the fall or its impact with the Waste Conveyance prevents formation of a significant fuel pool but could cause burning of some fuel and waste. Therefore, as conservatively evaluated, this unmitigated event is Risk Class II for the facility worker and co-located worker, and III for the MOI.

No preventive engineered feature is identified. The AC that prohibits aboveground liquid-fueled vehicles from being present in the Waste Shaft Access Area when CH Waste is present, and the Waste Conveyance control that requires Waste Shaft access door 156 to remain closed until the waste load has been removed from the conveyance, reduces the likelihood for the event to Beyond Extremely Unlikely (1/2 frequency bin each). Therefore, the mitigated frequency of this event is reduced to Beyond Extremely Unlikely.

No mitigative engineered or administrative features are selected for further risk reduction. Therefore, event consequences remain High to the facility worker and co-located worker, and Moderate for the MOI. This event is analyzed in Section 3.4 as the consequences to the MOI are evaluated to be Moderate.

Thus, this suite of controls reduces the Risk Classification for the facility worker and co-located worker to III, and IV for the MOI.

Pool Fire due to collision at the Waste Shaft Station

Event CH/RH-UG-01-005a2 is the representative event for a pool fire at the Waste Shaft Station resulting from a loaded waste transport backing into Waste Shaft sump, or from a vehicle collision with the transporter that pushes it into the shaft. The IC of the RH Facility Cask/LWFC limits the RH contribution to the event consequences and the WIPP WAC IC ensures the waste constituency and its confinement within a metal container of sound integrity. The MAR involved in the event involves a loaded CH facility pallet or an RH Waste Cask. The CH facility pallet is the bounding MAR. The sequence of events resulting in the transport falling down the Waste Shaft with subsequent pool formation and ignition results in an unmitigated frequency of Unlikely with High radiological dose consequences to the facility worker and co-located worker due to the CH Waste, and Low for the MOI. Therefore, this event is Risk Class I for the facility worker and co-located worker, and III for the MOI.

The preventive engineered feature of an automatic fire suppression system on Waste Handling vehicles/ equipment and UG vehicles/equipment in the Waste Shaft Station when CH Waste is present, is credited for fire suppression in the event of a collision in the Waste Shaft Area; however, no frequency reduction is taken since the system could not accomplish its function if the vehicle were to fall into the waste sump. The Waste Conveyance AC which requires the conveyance to remain at the Waste Shaft Station until the CH Waste is moving away from the Waste Shaft is credited for a full frequency bin reduction, thereby reducing the event frequency to Extremely Unlikely. The control requires the Waste Conveyance to remain at the Waste Shaft Station until the transporter is verified to be moving away from the waste shaft; reversal of direction at that point (a necessary assumption for the drop to occur) supports the judgment that this control reduces the event likelihood a full bin. The ACs of pre-operational checks of vehicles/equipment in the Waste Shaft Station when CH Waste is present, and the attendance of the vehicles/equipment in the Waste Shaft Station when CH Waste is present, reduces the risk by one frequency bin (1/2 bin each) to Beyond Extremely Unlikely. The individual attending the vehicles/equipment in the Waste Shaft Station is responsible for spotting of vehicles/equipment when operating in close proximity, observation for indications of vehicle/equipment misoperation (e.g., leaks, steering, braking), and conditions that could lead to a fire. In accordance with WIPP-023, UG workers are trained to extinguish developing stage fires, and DSA Chapter 12.0, “Procedures and Training,” states that employees are expected to evaluate and respond to developing stage fires only with portable fire extinguishers, if they have been trained to use the extinguishers and feel safe in doing so. The presence of the Waste Conveyance at the Waste Shaft Station until the CH Waste load is moving away from the Waste Shaft in coincidence with the Spotter and pre-operational checks prevents the transport vehicle from falling down the shaft such that the automatic fire suppression system capability would be negated. The automatic fire suppression system, however, would provide fire prevention in the event of a collision with pool fire in the Waste Shaft Station. Therefore, the mitigated frequency of this event is Beyond Extremely Unlikely.

No mitigative engineered or administrative features are selected for further risk reduction. Therefore, event consequences remain High to the facility worker and co-located worker, and Low for the MOI.

Thus, this suite of controls reduces the Risk Classification for the facility worker and co-located worker to III, and the MOI to IV.

Ordinary Combustible Fire at the Waste Shaft Station

Event CH/RH-UG-02-002a3 is the representative event for an ordinary combustible fire or a small combustible liquid pool fire (e.g., vehicle/equipment leak) at the Waste Shaft Station while waste is present. Vehicles/equipment are required to be inspected prior to use in proximity to CH Waste and to be attended when in proximity to CH Waste. Due to the specific inspection of vehicles/equipment for leaks

and the presence of a continuous observer, any leakage would only result in a small liquid pool that if ignited, would not challenge the capability of the UVFS/IVS. The IC of the RH Facility Cask/LWFC limits the RH contribution to the event consequences and the WIPP WAC IC ensures the waste constituency and its confinement within a metal container of sound integrity. The MAR involved in the event is one CH facility pallet. Ordinary combustible fires are slow to develop, the at-scene facility workers would have the opportunity to extinguish the fire before it fully develops, and/or to exit the fire scene thereby, keeping their consequences Low. The unmitigated frequency is Anticipated with High radiological dose consequences to the facility worker, Moderate for the co-located worker, and Low for the MOI. Therefore, this event is Risk Class I for the facility worker, II for the co-located worker, and III for the MOI.

There are no preventive engineered or administrative features credited for this event. Under the FPP, general housekeeping and combustible controls (see Chapter 11.0, “Operational Safety”) are in place; however, the event frequency remains Anticipated.

Event radiological consequence mitigation is provided by the active engineered feature of the UVFS/IVS that reduces radiological dose consequences to the co-located worker to Low. In accordance with DOE-STD-3009-2014, Section A.8, SSCs that are mitigative and active are preferred over ACs that are preventive. Additionally, ACs such as combustible loading and/or hot work were considered; however, the combination of these would not reduce the Risk Classification of this event. The Attendant notifies fellow UG facility workers and the CMR in the event of a potential radiological release. Upon notification, UG facility workers would egress toward the Salt Shaft. This action in combination with the airflow direction toward the exhaust point reduces the radiological dose consequences to the facility worker to Low.

Thus, this suite of controls reduces the risk for the facility worker, co-located worker, and MOI to Risk Classification III.

Waste Handling Building Fires

The following section provides a discussion of each preventive and mitigative control credited for one or more WHB fire events followed by a discussion of each representative event(s) and the specific controls selected for risk reduction for each event. For a discussion of the credited ICs see Section 3.3.2.3 above. The following controls require inclusion as SS controls in the TSR:

Engineered Preventers

Waste Handling Building Fire Suppression System. The WHB fire suppression system provides suppression of fires in the WHB before they become large enough to affect waste and/or propagate to areas where waste is outside of a closed Shipping Package, thereby reducing the likelihood of fires involving TRU Waste. The WHB fire suppression system was credited for the following WHB events:

CH/RH-WHB-01-001a	CH/RH-WHB-02-002a	CH/RH-WHB-04-001a	CH/RH-WHB-04-002a
CH/RH-WHB-04-003a	CH-WHB-01-001a1	CH-WHB-01-001a2	CH-WHB-02-001a
CH-WHB-04-001a	CH-WHB-04-005a		

Vehicle Barriers. Vehicle Barriers are a configured set of concrete barriers (e.g., Jersey type barriers) consisting of two continuous sections. The first section includes two rows of interconnected concrete barriers, installed approximately 5 feet west of the CH Bay/TMF common wall extending south from the TMF exterior wall a minimum distance of 25 feet. The second section consists of one row of interconnected concrete barriers positioned at least 25 feet south of the CH Bay exterior southwest wall

extending west between Airlock 100 to a point approximately 5 feet west of the CH Bay/TMF common wall (approximately 85 feet in total length) to intersect with the double row of barriers. An opening with a gap of ≤ 3 feet at the intersection of the east-west barrier and the double row of barriers is permitted for fire department access. The Vehicle Barriers prevent vehicles from crashing through the CH Bay southwest wall, or to be parked adjacent to the wall, thereby reducing the likelihood of either event. The barriers provide a significant impediment to inadvertent vehicle movement and prevent vehicles from passing through or parking adjacent to the wall. Prohibition of vehicles in this area reduces the likelihood for pool fires that could affect CH Waste within the CH Bay.

On occasion, liquid-fueled vehicles/equipment may require entry into this area to perform maintenance (e.g., WHB fire water header). To accomplish this, individual concrete sections within the barrier will be removed to permit vehicle/equipment access. During these periods, liquid-fueled vehicles/equipment within the exclusion zone will be Attended to reduce the likelihood for vehicle collisions and/or pool fires, and vehicles/equipment in the WHB Parking Area Unit will be Attended when in motion to reduce the likelihood for inadvertent entry into the exclusion zone. During these periods, the Vehicle Barriers in combination with the administrative requirement to attend vehicles/equipment within the exclusion zone and attend vehicles/equipment in motion outside of the WHB Parking Area Unit exclusion zone will reduce the likelihood of collisions and/or pool fires in this area.

The vehicles barriers, and vehicle/equipment attendance when the Vehicle Barriers are not fully installed, were credited for the following WHB event:

CH/RH-WHB-04-002a

Administrative Preventers

Aboveground Liquid-Fueled Vehicles/Equipment Prohibition. Liquid-fueled vehicles/equipment are prevented from entering the CH Bay, Room 108, and/or the Waste Shaft Access Area when TRU Waste is present and not in a closed Type B Shipping Package. This prohibition reduces the likelihood for pool fires. The CH Bay and Room 108 are separated from the Waste Shaft Access Area by airlocks except for a normally closed roll-up door (Door 140) which provides access for CH Waste movements between the CH Bay and the CLR. Therefore, the CH Bay and Room 108 can be in Waste Handling Mode while the Waste Shaft Access Area is not thereby allowing access to the UG for non-Waste Handling activities. However, aboveground liquid-fueled vehicles are required to be removed from the Waste Shaft Access Area, Waste Handling Mode declared, and then waste can be transported to the UG. The restricted operation of aboveground liquid-fueled vehicles/equipment was credited for the following WHB events:

CH-WHB-01-001a1 CH-WHB-01-001a2

Fuel Tanker Prohibition. Fuel Tanker trucks are prohibited from entering the WHB Parking Area Unit south of the WHB. Prohibition of Fuel Tankers from the WHB Parking Area Unit reduces the likelihood for a large source of liquid-fuel to contribute to a large pool fire affecting CH Waste located in the CH Bay. The prohibition of Fuel Tankers was credited for the following WHB event:

CH/RH-WHB-04-002a

Engineered Mitigators

Contact-Handled Waste Handling Confinement Ventilation System. The CH WH CVS provides a confinement barrier with HEPA filters providing the capability to limit releases of airborne radioactive contaminants from the CH Bay, Room 108, or the Waste Hoist Tower when moving CH Waste into the

CLR. These features reduce the consequences to the co-located worker and MOI (HEPA filtration). The CH WH CVS was credited for the following WHB events:

CH/RH-WHB-02-002a CH-WHB-02-001a CH-WHB-04-005a

Facility Pallet. The facility pallet provides shielding of CH Waste Containers from direct flame impingement. This reduces the consequences to all receptors by ensuring that CH Waste Containers remain intact (e.g., no lid loss with waste ejection) and therefore, the ARF/RF factors are lower as compared to unconfined burning ARF/RFs. The facility pallet was credited for the following WHB events:

CH/RH-WHB-01-001a CH-WHB-01-001a1 CH-WHB-01-001a2

Administrative Mitigators

No administrative mitigative controls were selected.

WHB Fire Event Descriptions

Pool Fire in the CH Bay

Event CH-WHB-01-001a1 is the representative event for pool fires in the CH Bay. The MAR involved in the event is 119 CH drums. The IC of the WIPP WAC IC ensures the waste constituency and its confinement within a metal container of sound integrity. The unmitigated frequency is Anticipated with Low radiological dose consequences to the facility worker, High for the co-located worker, and Low for the MOI. The facility worker radiological dose consequences are Low as a fire would be slow to develop and there are multiple exits from the WHB that would allow the facility worker to exit the area. Therefore, this event is Risk Class III for the facility worker, I for the co-located worker, and III for the MOI.

The preventive engineered feature of the WHB fire suppression system reduces the event frequency to Unlikely. The preventive AC of prohibiting liquid-fueled vehicles in the CH Bay and the Room 108 when CH Waste is present outside of closed Shipping Packages provides additional frequency reduction (1/2 frequency bin); however, the mitigated frequency of this event remains Unlikely.

Event radiological consequence mitigation is provided by the passive engineered feature of facility pallets that reduce radiological dose consequences to the co-located worker to Moderate. For events in the Moderate range, controls should be considered but are not required. In this case, the mitigated event is evaluated to maximize the number of containers involved in the fire, and assumes all containers experience seal failure due to their exposure to flame. In reality, the number of containers would be less due to downloading containers than storage in the CH Bay; not all containers would be exposed to the flame front; and containers exposed to the flames would provide shielding of other containers from the heat of the fire. Therefore, the consequences to the co-located worker are conservatively estimated to be at the lower end of the Moderate range. No mitigative administrative features were credited for further consequence reduction.

Thus, this suite of controls reduces the Risk Classification to III for the facility worker, II for the co-located worker, and III for the MOI.

Within the context of the Pool Fire in the CH Bay, event CH/RH-WHB-01-001a is the representative event for pool fires originating outside the CH Bay in either the RH Bay or the CLR with the potential to

involve CH Waste in the CH Bay. CH/RH-WHB-01-001a is bounded by CH-WHB-01-001a1 as CH-WHB-01-001a1 is an Anticipated event versus Unlikely and both events are in the qualitative High consequence bin although CH/RH- WHB-01-001a involves more drums than CH-WHB-01-001a (i.e., 218 versus 119). The WIPP WAC IC ensures the waste constituency and its confinement within a metal container of sound integrity. The MAR involved in event CH-WHB-01-001a is 119 drums in the CH Bay and RH Bay inventory if the pool originates in the RH Bay. The CH inventory is the bounding MAR. The unmitigated frequency is Unlikely with Low radiological dose consequences to the facility worker, High for the co-located worker, and Low for the MOI.

The unmitigated frequency is Unlikely for the pool fire originating in the RH Bay due to the infrequent operation of liquid combustible containing equipment (i.e., manlift with 40-gallon hydraulic fluid capacity) that operate in this area. The manlift is required to service equipment mounted in the overhead of the RH Bay near the roll-up door. This is a periodic but infrequent activity so an Unlikely frequency is selected due to the limited time at risk of this activity. The facility worker radiological dose consequences are Low as a fire would be slow to develop and there are multiple exits from the WHB that would allow the facility worker to exit the area. Therefore, this event is Risk Class III for the facility worker, I for the co-located worker, and III for the MOI.

The unmitigated frequency is Unlikely for the pool fire originating in the CLR due to the infrequent use of the Waste Shaft for downloading of diesel fuel to the UG as the preferred and normal path for downloading fuel is through the use of the Salt Shaft. Use of the Waste Shaft is an infrequent activity so an Unlikely frequency is selected due to the limited time at risk of this activity. Additionally, for a fuel pool affect CH Waste in the CH Bay it would need to overcome the following factors: (1) the Cask Loading Car rails would tend to route a fuel spill into the Waste Shaft (no Waste would be present in the shaft during this operation; (2) Door 140 would be closed which would limit the flow of the pool into the CH Bay; and (3) a trench just inside the CH Bay along the north wall would prevent the fuel from reaching any CH Waste. The facility worker radiological dose consequences are Low as a fire would be slow to develop and there are multiple exits from the WHB that would allow the facility worker to exit the area. Therefore, this event is Risk Class III for the facility worker, I for the co-located worker, and III for the MOI.

For either scenario (CLR or RH Bay fuel spill), the preventive engineered feature of the WHB fire suppression system reduces the event frequency to Extremely Unlikely. No preventive administrative features are credited for further frequency reduction. Therefore, the frequency of this event remains Extremely Unlikely.

For either scenario (CLR or RH Bay fuel spill), Event radiological consequence mitigation is provided by the passive engineered feature of facility pallets that reduces radiological dose consequences to the co-located worker to Moderate. No mitigative administrative features were credited for further consequence reduction.

Thus, this suite of controls reduces the Risk Classification to IV for the facility worker, III for the co-located worker, and IV for the MOI.

Pool Fire in the Waste Collar Area

Event CH-WHB-01-001a2 is the representative event for pool fires in the waste collar area of the WHB. The WIPP WAC IC ensures the waste constituency and its confinement within a metal container of sound integrity. The MAR involved in the event is one CH facility pallet. The unmitigated frequency is Anticipated with Low radiological dose consequences to the facility worker, High for the co-located worker, and Low for the MOI. The facility worker radiological dose consequences are Low as a fire

would be slow to develop and there are multiple exits from the WHB that would allow the facility worker to exit the area. Therefore, this event is Risk Class III for the facility worker, I for the co-located worker, and III for the MOI.

The preventive engineered feature of the WHB fire suppression system reduces the event frequency to Unlikely. The preventive AC of prohibiting liquid-fueled vehicles in the Waste Shaft Access Area when waste is present is considered to provide a full bin of frequency reduction, thereby reducing the mitigated frequency to Extremely Unlikely. Fueled vehicles are not used for downloading CH Waste. An electric powered forklift places the facility pallet onto the Conveyance Loading Car which is then moved onto the Waste Conveyance. Since liquid fueled vehicles are not used in the CH Bay for Waste Handling and are not used for loading CH Waste onto the Waste Conveyance, allowing for a full bin of frequency reduction in this situation is reasonable.

The passive engineered feature of the facility pallet reduces the co-located worker radiological dose consequences to Moderate. No mitigative administrative features were credited for further consequence reduction. However, for fire events occurring in the Waste Shaft Collar area when Door 140 is open, the CH WH CVS would provide further mitigation of the consequences to the co-located workers. Therefore, the dose consequences to the co-located worker are reduced to Moderate.

Thus, this suite of controls reduces the Risk Classification to IV to the facility worker, III to the co-located worker, and IV to the MOI.

Large Fire in CH Bay

Event CH-WHB-04-001a the representative event for large ordinary combustible fires in the CH Bay. The WIPP WAC IC ensures the waste constituency and its confinement within a metal container of sound integrity. The MAR involved in the event is three CH facility pallets. The unmitigated frequency is Unlikely with Low radiological dose consequences to the facility worker, Moderate for the co-located worker, and Low for the MOI. The frequency is Unlikely as the WHB is designed and constructed of noncombustible materials (e.g., concrete and metal). The facility worker radiological dose consequences are Low as a fire would be slow to develop and there are multiple exits from the WHB that would allow the facility worker to exit the area. Therefore, this event is Risk Class III for the facility worker, II for the co-located worker, and III for the MOI.

The preventive engineered feature of the WHB fire suppression system reduces the event frequency to Extremely Unlikely which lowers the Risk Class for the co-located worker to III. No preventive administrative features are credited for additional mitigated frequency reduction.

No mitigative engineered or administrative features are credited for consequence reduction.

Thus, this suite of controls reduces the Risk Classification to IV for the facility worker, III for the co-located worker, and IV for the MOI.

Externally Initiated Large Fire Penetrates WHB

Event CH/RH-WHB-04-001a is the representative event for (non-pool) fires initiated external to the WHB. The IC of the RH Facility Cask/LWFC limits the RH contribution to the event consequences, the WIPP WAC IC ensures the waste constituency and its confinement within a metal container of sound integrity, and the noncombustible construction of the WHB prevents fire intrusion. The MAR involved in the event is eight CH facility pallets and the RH Bay inventory. The WHB being designed and constructed of noncombustible materials (e.g., concrete and metal) results in an unmitigated frequency of

Unlikely with Low radiological dose consequences to the facility worker, Moderate for the co-located worker, and Low for the MOI. The facility worker radiological dose consequences are Low as a fire external to the WHB would be slow to develop and there are multiple exits from the WHB that would allow the facility worker to exit the area. Therefore, this event is Risk Class III for the facility worker, II for the co-located worker, and III for the MOI.

The preventive engineered feature of the WHB fire suppression system reduces the event frequency to Extremely Unlikely which lowers the Risk Class for the co-located worker to III. No preventive administrative features are credited for additional mitigated frequency reduction.

No mitigative engineered or administrative features are credited for consequence reduction.

Thus, this suite of controls reduces the Risk Classification to IV for the facility worker, III for the co-located worker, and IV for the MOI.

Externally Initiated Large Pool Fire Penetrates WHB

Event CH/RH-WHB-04-002a is the representative event for pool fires initiated external to the WHB. The IC of the RH Facility Cask/LWFC limits the RH contribution to the event consequences, the WIPP WAC IC ensures the waste constituency and its confinement within a metal container of sound integrity, and the noncombustible construction of the WHB prevents fire intrusion as well as the curbing around the base of the WHB which prevents intrusion of liquids. The MAR involved in the event is eight CH facility pallets and one RH Waste Canister. A collision event with subsequent pool formation and ignition results in an unmitigated frequency of Unlikely with Low radiological dose consequences to the facility worker, Moderate for the co-located worker, and Low for the MOI. The facility worker radiological dose consequences are Low as a fire external to the WHB would be slow to develop and there are multiple exits from the WHB that would allow for facility workers to exit the area. Therefore, this event is Risk Class III for the facility worker, II for the co-located worker, and III for the MOI.

The preventive engineered feature of the substantial barrier a minimum of 25 feet from the southwest CH Bay exterior wall and the WHB fire suppression system reduces the event frequency to Beyond Extremely Unlikely which lowers the Risk Class for the co-located worker to III. The preventive administrative feature of prohibiting Fuel Tankers from entering the WHB Parking Area Unit is credited although no additional mitigated frequency reduction is taken. Therefore, the mitigated frequency of this event is Beyond Extremely Unlikely.

No mitigative engineered or administrative features are credited for consequence reduction.

Thus, this suite of controls reduces the Risk Classification to IV for all receptors.

Large Fire in Waste Hoist Tower

Event CH/RH-WHB-04-003a is the representative event for large fires in the Waste Hoist Tower with the potential for its collapse down the Waste Shaft. The IC of the RH Facility Cask/LWFC limits the RH contribution to the event consequences, the WIPP WAC IC ensures the waste constituency and its confinement within a metal container of sound integrity, and the noncombustible construction of the WHB. The MAR involved in the event is four CH Waste assemblies or one RH Waste Canister. A fire event growing into a large fire significant enough to collapse the Waste Hoist Tower results in an unmitigated frequency of Extremely Unlikely with High radiological dose consequences to the facility worker, High to the co-located worker, and Low for the MOI. Therefore, this event is Risk Class II for the facility and co-located worker, and III for the MOI.

The preventive engineered feature of the WHB fire suppression system reduces the event frequency to Beyond Extremely Unlikely which lowers the Risk Class for the co-located worker to III. No preventive administrative features are credited for additional mitigated frequency reduction.

No mitigative engineered or administrative features are credited for consequence reduction.

Thus, this suite of controls reduces the Risk Classification to III for the facility worker and co-located worker, and IV for the MOI.

Ordinary Combustible Fire in the WHB

Event CH/RH-WHB-02-002a (CH and RH) is the representative event for ordinary combustible fires occurring in the WHB. The IC of the RH Facility Cask/LWFC limits the RH contribution to the event consequences, the WIPP WAC IC ensures the waste constituency and its confinement within a metal container of sound integrity. The MAR involved is one CH facility pallet and one RH Waste Canister. The unmitigated frequency is Anticipated with Low radiological dose consequences to the facility worker, Moderate for the co-located worker due to the CH Waste, and Low for the MOI. The facility worker radiological dose consequences are Low as a fire would be slow to develop and there are multiple exits from the WHB that would allow the facility worker to exit the area. Therefore, this event is Risk Class III for the facility worker, II for the co-located worker, and III for the MOI.

The preventive engineered feature of the WHB fire suppression system reduces the event frequency to Unlikely; however, the Risk Class for the co-located worker remains II. No preventive administrative features are credited for additional mitigated frequency reduction.

Event radiological consequence mitigation is provided by the active engineered feature of the CH WH CVS that reduces radiological dose consequences to the co-located worker to Low. No mitigative administrative features are credited for consequence reduction.

Thus, this suite of controls reduces the Risk Classification to III for the facility worker, co-located worker, and MOI.

Collision with Ordinary Combustible Fire in the WHB

Event CH-WHB-02-001a (CH only) is the representative event for a collision followed by an ordinary combustible fire occurring in the WHB. This event includes the potential for an occurrence of an ordinary combustible fire in the Conveyance Loading Room during downloading. The WIPP WAC IC ensures the waste constituency and its confinement within a metal container of sound integrity. The MAR involved in the event is one CH facility pallet. The unmitigated frequency is Anticipated with Low radiological dose consequences to the facility worker, Moderate for the co-located worker due to the CH Waste, and Low for the MOI. The facility worker radiological dose consequences are Low as a fire would be slow to develop and there are multiple exits from the WHB that would allow the facility worker to exit the area. Therefore, this event is Risk Class III for the facility worker, II for the co-located worker, and III for the MOI.

The preventive engineered feature of the WHB fire suppression system reduces the event frequency to Unlikely; however, the Risk Class for the co-located worker remains II. No preventive administrative features are credited for additional mitigated frequency reduction.

Event radiological consequence mitigation is provided by the active engineered feature of the CH Waste Handling Confinement Ventilation System that reduces radiological dose consequences to the co-located

worker to Low. No mitigative administrative features are credited for consequence reduction. In the case where the fire occurs in the CLR while Door 140 between the CH Bay and the CLR is open, the CH Waste Handling Confinement Ventilation System would provide the filtration. In the case where the fire occurs in the CLR after Door 140 is closed, event radiological consequences remain Moderate to the co-located worker. There are limited ordinary combustibles in the Waste Shaft Access Area, the WHB Fire Suppression System covers this area, the consequences would be mid-Moderate (85 rem) to the co-located worker, and the CH Waste load is only in this area for a limited period of time (minutes). In the event that a CH Waste load could not be immediately downloaded, then the CH Waste load would be returned to the CH Bay.

Thus, this suite of controls reduces the Risk Classification to III for the facility worker, co-located worker, and MOI when Door 140 is open. However, when Door 140 is closed, the Risk Classification remains III for the facility worker, II for the co-located worker, and III to the MOI.

Large Ordinary Combustible Fire following Collision in the CH Bay

Event CH-WHB-04-005a is the representative event for large ordinary combustible fires initiated by vehicle collision occurring in the CH Bay. The WIPP WAC IC ensures the waste constituency and its confinement within a metal container of sound integrity. The MAR involved in the event is five CH facility pallets. The unmitigated frequency is Anticipated with Low radiological dose consequences to the facility worker, High for the co-located worker, and Low for the MOI. The facility worker radiological dose consequences are Low as a fire would be slow to develop and there are multiple exits from the WHB that would allow the facility worker to exit the area. Therefore, this event is Risk Class III for the facility worker, I for the co-located worker, and III for the MOI.

The preventive engineered feature of the WHB fire suppression system reduces the event frequency to Unlikely; however, the Risk Class for the co-located worker remains I. No preventive administrative features are credited for additional mitigated frequency reduction.

Event radiological consequence mitigation is provided by the active engineered features of the CH WH CVS that reduces radiological dose consequences to the co-located worker to Low. No mitigative administrative features are credited for consequence reduction.

Thus, this suite of controls reduces the Risk Classification to III for the facility worker, co-located worker, and MOI.

Pool Fire in Hot Cell Complex

Event RH-WHB-01-006a is the representative event for pool fires occurring in the Hot Cell Complex. The WIPP WAC IC ensures the waste constituency and its confinement within a metal container of sound integrity. The MAR involved in the event is one RH Waste Canister. The unmitigated frequency is Anticipated with Low radiological dose consequences to the facility worker, Moderate for the co-located worker, and Low for the MOI. The facility worker radiological dose consequences are Low as a fire would be slow to develop and there are multiple exits from the WHB that would allow the facility worker to exit the area. Additionally, the Transfer Cell activity is remotely operated and therefore, the facility worker would not be present. This event is Risk Class III for the facility worker, II for the co-located worker, and III for the MOI.

No preventive or mitigative controls were identified for this event. The consequences of this event are evaluated to be slightly above the Moderate threshold for the co-located worker. In the Transfer Cell, there are no ignition sources, no combustibles (liquid or ordinary) are in the cell, and the RH Waste

Canister is inside an RH-72B Shipping Package with the inner lid in place. For events in the Moderate range, controls should be considered but are not required. The Moderate consequences to this event are considered to be extremely conservative and no credited controls were selected.

Thus, this event remains as a Risk Classification of III for the facility worker, II for the co-located worker, and III for the MOI.

Ordinary Combustible Fire in Transfer Cell

Event RH-WHB-03-001a is the representative event for ordinary combustible fires occurring in the Hot Cell Complex. The WIPP WAC IC ensures the waste constituency and its confinement within a metal container of sound integrity. The MAR involved in the event is one RH Waste Canister. The unmitigated frequency is Anticipated with Low radiological dose consequences to the facility worker, Moderate for the co-located worker, and Low for the MOI. The facility worker radiological dose consequences are Low as a fire would be slow to develop and there are multiple exits from the WHB that would allow the facility worker to exit the area. Additionally, the Transfer Cell activity is remotely operated and therefore, the facility worker would not be present. This event is Risk Class III for the facility worker, II for the co-located worker, and III for the MOI.

No preventive or mitigative controls were identified for this event. The consequences of this event are evaluated to be Moderate for the co-located worker. In the Transfer Cell, there are no ignition sources, no combustibles (liquid or ordinary) are in the cell, and the RH Waste Canister is inside an RH-72B Shipping Package with the inner lid in place. For events in the Moderate range, controls should be considered but are not required. The Moderate consequences to this event are considered to be extremely conservative and no credited controls were selected.

Thus, this event remains as a Risk Classification of III for the facility worker, II for the co-located worker, and III for the MOI.

Internal Container Fires

The following section provides a discussion of each preventive and mitigative control credited for one or more internal container fire events followed by a discussion of each representative event and the specific controls selected for risk reduction for each event. For a discussion of the credited ICs, see Section 3.3.2.3 above. The following controls require inclusion as SS controls in the TSR:

Engineered Preventers

No engineered preventive controls were selected for risk reduction.

Administrative Preventers

No administrative preventer controls were selected for risk reduction.

Engineered Mitigators

Contact-Handled Waste Handling Confinement Ventilation System. The CH WH CVS provides a confinement barrier with HEPA filters providing the capability to limit releases of airborne radioactive contaminants from the CH Bay or Room 108. These features reduce the consequences to the co-located worker and MOI (HEPA filtration). The CH WH CVS was credited for the following WHB events:

CH/RH-WHB-02-001a CH-WHB-03-001a

Underground Ventilation Filtration System / Interim Ventilation System. The UVFS/IVS provides HEPA filtration of UG exhaust air. This system also draws potential airborne contamination away from normally occupied locations in the UG. These features reduce the consequences to the co-located worker (HEPA filtration) and reduce the consequences to the facility worker by drawing contamination away from normally occupied areas of the UG. The UVFS/IVS was credited for the following UG event:

CH/RH-UG-02-001a

Administrative Mitigators

No administrative mitigative controls were selected for risk reduction.

Internal Container Fire Event Descriptions

Internal Waste Container Fire in the Underground

Event CH/RH-UG-02-001a is the representative event for an internal TRU Waste Container fire in the UG. The IC of the RH Facility Cask/LWFC limits the RH contribution to the event consequences and the WIPP WAC IC ensures the waste constituency and its confinement within a metal container of sound integrity. The MAR involved in the event is one CH or RH Waste Container. An internal Waste Container fire significant enough to result in High consequences to the facility worker would be observable (i.e., behavior, temperature, paint) and would allow the immediate UG facility worker to depart the area prior to receiving a High dose. However, UG facility workers not present at that location would not be aware of the event and therefore, could receive a High dose. A small (e.g., smoldering) internal Waste Container fire would be a slow release with time for dispersal that would not result in High consequences to any UG facility worker. The unmitigated frequency is Anticipated with High radiological dose consequences to UG facility workers not present at the event location, Moderate for the co-located worker, and Low for the MOI. Therefore, this event is Risk Class I for the facility worker, II for the co-located worker, and III for the MOI.

There are no preventive engineered or administrative features credited for this event. Therefore, the event frequency remains Anticipated. If this event were to occur in the Waste Shaft Station or VEZ, an Attendant would be present due to the requirement for vehicles/equipment to be Attended when in these areas. That is, TRU Waste is transported through these areas, not stored, and therefore, the TRU Waste would be on a Waste Handling vehicle, hence, Attended. In a disposal room, the TRU Waste may not be Attended; however, the Disposal Room is near the UVS exhaust point which would draw any release away from the UG facility workers.

Event radiological consequence mitigation is provided by the active engineered feature of the UVFS/IVS that reduces radiological dose consequences to the co-located worker to Low. In accordance with DOE-STD-3009-2014, Section A.8, SSCs that are mitigative and active are preferred over ACs that are preventive. Additionally, ACs such as combustible loading and/or hot work were considered; however, these controls would have no effect on the likelihood of a fire occurring within a Waste Container. The UVFS/IVS also reduces radiological dose consequences to the facility worker by drawing the airflow in the UG toward the exhaust point. The Attendant, when required to be present, notifies fellow UG facility workers and the CMR in the event of a potential radiological release. Upon notification, UG facility workers would egress toward the Waste Shaft Station. This action in combination with the airflow direction toward the Waste Face reduces the radiological dose consequences to the facility worker to Low.

Thus, this suite of controls reduces the risk for the facility worker, co-located worker, and MOI to Risk Classification III.

Internal Waste Container Fire in the Waste Handling Building

Event CH/RH-WHB-02-001a is the representative event for an internal Waste Container fire in the WHB. The IC of the RH Facility Cask/LWFC limits the RH contribution to the event consequences and the WIPP WAC IC ensures the waste constituency and its confinement within a metal container of sound integrity. The MAR involved in the event is one CH Waste Container or one RH Waste Canister. An internal Waste Container fire significant enough to result in High consequences to the facility worker would be observable (i.e., behavior, temperature, paint) and allow the facility worker to depart the area prior to receiving a High dose. A small (e.g., smoldering) internal Waste Container fire would be a slow release with time for dispersal that would not result in High consequences to the facility worker. Therefore, in either case, the facility worker consequences would be Low. The unmitigated frequency is Anticipated with Low radiological dose consequences to the facility worker, Moderate for the co-located worker, and Low for the MOI. Therefore, this event is Risk Class III for the facility worker, II for the co-located worker, and III for the MOI.

There are no preventive engineered or administrative features for this event.

Event radiological consequence mitigation is provided by the active engineered feature of the CH WH CVS that reduces radiological dose consequences to the co-located worker to Low.

Thus, this suite of controls reduces the Risk Classification to III for the facility worker, co-located worker, and MOI.

Internal Waste Container Fire in the Shielded Storage Room

Event CH-WHB-03-001a is the representative event for an internal Waste Container fire in the Shielded Storage Room. The WIPP WAC IC ensures the waste constituency and its confinement within a metal container of sound integrity. The MAR involved in the event is one CH Waste Container. A Waste Container in the Shielded Storage Room would be suspect and therefore, the roll-up door into the room would be closed which would keep facility worker consequences Low. However, if the door were open, an internal Waste Container fire significant enough to result in High consequences to the facility worker would be observable (i.e., behavior, temperature, paint) and allow the facility worker to depart the area prior to receiving a High dose. A small (e.g., smoldering) internal Waste Container fire would be a slow release with time for dispersal that would not result in High consequences to the facility worker. Therefore, in either case, the facility worker consequences would be Low. The unmitigated frequency is Anticipated with Low radiological dose consequences to the facility worker, Moderate for the co-located worker, and Low for the MOI. Therefore, this event is Risk Class III for the facility worker, II for the co-located worker, and III for the MOI.

There are no preventive engineered or administrative features for this event.

Event radiological consequence mitigation is provided by the active engineered feature of the CH WH CVS that reduces radiological dose consequences to the co-located worker to Low.

Thus, this suite of controls reduces the Risk Classification to III for the facility worker, co-located worker, and MOI.

3.3.2.3.2 Explosion Events

The following section provides a discussion of each preventive and mitigative control credited for a container over-pressurization event followed by a discussion of the representative over-pressurization event (four total) and the specific controls selected for risk reduction for each event. For a discussion of the credited ICs, see Section 3.3.2.3 above. The following controls require inclusion as SS controls in the TSR.

Internal Container Deflagration

The following controls were identified for one or more representative internal container fire events and require inclusion as SS controls in the TSR:

Engineered Preventers

No engineered preventive controls were selected for risk reduction.

Administrative Preventers

No administrative preventer controls were selected for risk reduction.

Engineered Mitigators

Panel 6 and Panel 7, Room 7 Isolation Bulkheads. The installation of isolation bulkheads mitigates the consequences of a TRU Waste Container over-pressurization (e.g., caused by exothermic reaction) event in a closed disposal panel. The Panels/Rooms are isolated on both the intake and exhaust sides such that there is no airflow into or out of the enclosed space so that static conditions are created that resist transmission of particulate and allow for gravitational settling. The isolation bulkhead is credited for the following event:

CH-UG-06-002a

Underground Ventilation Filtration System / Interim Ventilation System. The UVFS/IVS provides HEPA filtration of UG exhaust air. This system also draws potential airborne contamination away from normally occupied locations in the UG. These features reduce the consequences to the co-located worker (HEPA filtration) and reduce the consequences to the facility worker by drawing contamination away from normally occupied areas of the UG. The UVFS/IVS was credited for the following UG event:

CH-UG-06-002a

Administrative Mitigators

WIPP WAC: Suspect Container Response. When unloading CH Waste Containers from their Type B Shipping Packages, the Waste Containers are visually inspected, to the degree permitted without disassembling the waste assembly, for signs of “suspect” containers. Suspect containers, if found during unpackaging or through the normal course of waste emplacement, are isolated and handled in accordance with specific procedures to prevent worker injury. Compliance with the WIPP WAC is credited for the following events:

CH/RH-UG-06-001a CH-UG-06-001a CH-WHB-06-001a

Real-time Monitoring at Isolation Bulkheads. When performing work activities in proximity to Panel 6 and/or Panel 7, Room 7 radiological monitoring of the work area shall be performed to detect abnormal levels in the area in case of another exothermic event behind the bulkhead. High heat waste from the waste stream that caused the February 2014 event is located behind the Panel 6 and Panel 7, Room 7 bulkheads. Since there is a potential for a similar event to occur, the monitoring of work activities in these areas is necessary to alert workers in close proximity. The Real-time Monitoring at Isolation Bulkheads control is credited for the following event:

CH-UG-06-002a

Internal Container Deflagration Event Descriptions

Internal Waste Container Deflagration/Over-pressurization in the UG

Event CH/RH-UG-06-001a is the representative event for a CH Waste Container deflagration in the UG prior to reaching the disposal room. The MAR involved in the event is four CH Waste Containers. The unmitigated frequency is Anticipated with High radiological consequences to the facility worker, Low for the co-located worker, and Low for the MOI. Therefore, this event is Risk Class I for the facility worker, III for the co-located worker, and III for the MOI.

There are no preventive engineered or administrative features for this event.

There are no mitigative engineered features for this event. Facility worker consequences are mitigated to Low by the Suspect Container control. To further ensure compliance with the WIPP WAC, TRU Waste Containers are visually inspected for signs of “suspect” containers (DOE-STD-5506-2007, Section 3.3.2.2) and handled in accordance with specific actions (see TSR LCO 3.7.1, “Waste Acceptability Control”) to ensure protection of workers. This control ensures that if WIPP suspects a container of not complying with the WIPP WAC or if WIPP is informed by a waste generator that a container does not comply or is suspected of being noncompliant, then further handling of that container will be performed in accordance with an acceptable response plan. This response plan will contain provisions to protect the worker from hazards associated with storage and/or movement of the suspect container.

Thus, this suite of controls reduces the Risk Classification to III for the facility worker, co-located worker, and MOI.

Internal Waste Container Deflagration/Over-pressurization in Open Disposal Room

Event CH-UG-06-001a is the representative event for a CH Waste Container deflagration in an open disposal room. The MAR involved in the event is four CH Waste Containers. The unmitigated frequency is Anticipated with High radiological consequences to the facility worker, Moderate for the co-located worker, and Low for the MOI. Therefore, this event is Risk Class I for the facility worker, II for the co-located worker, and III for the MOI.

There are no preventive engineered or administrative features for this event.

Event radiological consequence mitigation is provided by the active engineered feature of the UVFS/IVS that reduces radiological dose consequences to the co-located worker to Low. Facility worker consequences are mitigated to Low by the Suspect Container control. To further ensure compliance with the WIPP WAC, TRU Waste Containers are visually inspected for signs of “suspect” containers (DOE-STD-5506-2007, Section 3.3.2.2) and handled in accordance with specific actions (see TSR LCO 3.7.1) to

ensure protection of workers. This control ensures that if WIPP suspects a container of not complying with the WIPP WAC or if WIPP is informed by a waste generator that a container does not comply or is suspected of being noncompliant, then further handling of that container will be performed in accordance with an acceptable response plan. This response plan will contain provisions to protect the worker from hazards associated with storage and/or movement of the suspect container.

Thus, this suite of controls reduces the Risk Classification to III for the facility worker, co-located worker, and MOI.

Internal Waste Container Over-pressurization in a Closed Disposal Panel

Event CH-UG-06-002a is the representative event for a CH Waste Container over-pressurization / exothermic reaction in a closed disposal room. The WIPP WAC IC ensures the waste constituency and its confinement within a metal container of sound integrity. The MAR involved in the event is 59 CH Waste Containers. The unmitigated frequency is Anticipated with High radiological dose consequences to the facility worker, High for the co-located worker, and Low for the MOI. Therefore, this event is Risk Class I for the facility worker, I for the co-located worker, and III for the MOI.

There are no preventive engineered or administrative features for this event.

Event radiological consequence mitigation is provided by the passive Panel 6, and Panel 7, Room 7 isolation bulkheads, which prevent the movement of air into and out of the enclosed space, and the active engineered feature of the UVFS/IVS. WIPP-051, Revision 3 determined an unmitigated MOI dose of 3.5 rem which is below the threshold of 5.0 rem for consideration of Safety Class controls. The isolation bulkhead and UVFS/IVS reduce radiological dose consequences to the co-located worker to Low. The isolation bulkheads and the monitoring of the area in proximity to Panel 6 and Panel 7, Room 7 provides detection of an abnormal condition and notification of workers which reduces facility worker consequences to Low, as workers would egress from the affected areas. The airflow direction toward the exhaust drift reduces the radiological dose consequences to other UG facility workers to Low.

Thus, this suite of controls reduces the Risk Classification to III for the facility worker, co-located worker, and MOI.

Internal Waste Container Deflagration/Over-pressurization in the Waste Handling Building

Event CH-WHB-06-001a is the representative event for a CH Waste Container deflagration in the WHB. The MAR involved in the event is four CH Waste Containers. The unmitigated frequency is Anticipated with High radiological dose consequences to the facility worker, Low for the co-located worker, and Low for the MOI. Therefore, this event is Risk Class I for the facility worker, III for the co-located worker, and III for the MOI.

There are no preventive engineered or administrative features for this event.

There are no mitigative engineered features for this event. Facility worker consequences are mitigated to Low by the Suspect Container control. To further ensure compliance with the WIPP WAC, TRU Waste Containers are visually inspected for signs of “suspect” containers (DOE-STD-5506-2007, Section 3.3.2.2) and handled in accordance with specific actions (see TSR LCO 3.7.1) to ensure protection of workers. This control ensures that if WIPP suspects a container of not complying with the WIPP WAC or if WIPP is informed by a waste generator that a container does not comply or is suspected of being noncompliant, then further handling of that container will be performed in accordance with an

acceptable response plan. This response plan will contain provisions to protect the worker from hazards associated with storage and/or movement of the suspect container.

Thus, this suite of controls reduces the Risk Classification to III for the facility worker, co-located worker, and MOI.

3.3.2.3.3 Loss of Confinement Events

The loss of confinement events addressed in this evaluation include mechanical insults from vehicle/equipment (DOE-STD-5506-2007, Event 9) and drops, impacts, or spills from a variety of causes, including missiles and mishandling (DOE-STD-5506-2007, Event 10), or collapse of stacked Waste Containers (Event 11). These loss of confinement events are postulated to occur in the UG or WHB and are postulated to involve CH and/or RH Waste. Table 3.3-9 lists the loss of confinement events that are postulated to have higher risk (Risk Class 1 or Risk Class II) to a facility worker or co-located worker and require further evaluation to reduce the consequence or risk.

Loss of Confinement

The following section provides a discussion of each preventive and mitigative control credited for a loss of confinement event followed by a discussion of the representative event (three total) and the specific controls selected for risk reduction for each event. For a discussion of the credited ICs, see Section 3.3.2.3 above. The following controls require inclusion as SS controls in the TSR:

Engineered Preventers

Waste Hoist Brakes. The Waste Hoist Brakes work in conjunction with the Waste Hoist Support Structure to control movement of the conveyance up and down the Waste Shaft. This prevents an uncontrolled drop of a loaded Waste Conveyance by reducing the likelihood of uncontrolled conveyance movement upon loss of power. The Waste Hoist braking system was credited for the following event:

CH/RH-UG-10-004a

Administrative Preventers

Waste Handling Program: Waste Conveyance Control. The Waste Conveyance Car is required to not enter the Waste Shaft Collar Room unless the Waste Shaft Conveyance is present; once the Waste Shaft Conveyance is loaded with waste, the Waste Shaft Access doors shall be closed and remain closed while waste is present in the Waste Shaft; and the Waste Shaft Conveyance shall remain present at the Waste Shaft Station until the waste load is moving away from the Waste Shaft. Additionally, the Waste Shaft Conveyance shall be present at the Waste Shaft Station prior to bringing TRU Waste into the station for uploading. This reduces the likelihood for vehicles, equipment, and/or loads to drop down an open Waste Shaft into the shaft sump. The presence of the Waste Shaft Conveyance while TRU Waste is present is credited for the following UG loss of confinement event:

CH/RH-UG-10-005a

Engineered Mitigators

Underground Ventilation Filtration System / Interim Ventilation System. The UVFS/IVS provides HEPA filtration of UG exhaust air. This system also draws potential airborne contamination away from normally occupied locations in the UG. These features reduce the consequences to the co-located worker

(HEPA filtration) and reduce the consequences to the facility worker by drawing contamination away from normally occupied areas of the UG. The UVFS/IVS is credited for the following UG events:

CH/RH-UG-09-003a CH/RH-UG-10-003a

Administrative Mitigators

No administrative mitigative controls were selected for risk reduction.

Loss of Confinement Event Descriptions

Forklift Collision with CH Waste Containers in the UG

Event CH/RH-UG-09-003a is the representative event for a loss of confinement occurring in the UG due to a forklift tine puncture of a CH or RH Waste container. The WIPP WAC IC ensures the waste constituency and its confinement within a metal container of sound integrity. The MAR involved in the event is nine CH Waste assemblies or an RH Facility Cask. The CH Waste is the bounding MAR. The unmitigated frequency is Anticipated with Low radiological dose consequences to the facility worker, Moderate for the co-located worker, and Low for the MOI. The facility worker radiological dose consequences are Low as the loss of confinement would not result in death, serious injury, or significant radiological exposure to the facility worker.

There are no preventive engineered or administrative features for this event.

Event radiological consequence mitigation is provided by the active engineered feature of the UVFS/IVS that reduces radiological dose consequences to the co-located worker to Low. No mitigative administrative features are credited for consequence reduction.

Thus, this event remains as a Risk Classification of III for the facility worker, III for the co-located worker, and III for the MOI.

Pressurized Container impacts CH Waste Containers in the UG

Event CH/RH-UG-10-003a is the representative event for a loss of confinement occurring in the UG due to a pressurized cylinder impacting a CH or RH Waste container. The WIPP WAC IC ensures the waste constituency and its confinement within a metal container of sound integrity. The MAR involved in the event is a CH facility pallet or an RH Facility Cask. The CH Waste is the bounding MAR. The unmitigated frequency is Anticipated with Low radiological dose consequences to the facility worker, Moderate for the co-located worker, and Low for the MOI. The facility worker radiological dose consequences are Low as the loss of confinement would not result in death, serious injury, or significant radiological exposure to the facility worker.

There are no preventive engineered or administrative features for this event.

Event radiological consequence mitigation is provided by the active engineered feature of the UVFS/IVS that reduces radiological dose consequences to the co-located worker to Low. No mitigative administrative features are credited for consequence reduction.

Thus, this event remains as a Risk Classification of III for the facility worker, III for the co-located worker, and III for the MOI.

Uncontrolled Descent of the Conveyance Results in Loss of Confinement in the UG

Event CH/RH-UG-10-004a is the representative event for a loss of confinement in the UG resulting from an uncontrolled descent of the Waste Conveyance. The IC of the Waste Hoist Support Structure reduces the likelihood for an uncontrolled descent and the WIPP WAC IC ensures the waste constituency and its confinement within a metal container of sound integrity. The MAR involved in the event is one CH Waste facility pallet or one RH Waste Canister. The CH Waste is the bounding MAR. An uncontrolled descent of the Waste Conveyance results in an unmitigated frequency of Extremely Unlikely with High radiological dose consequences to the facility worker and co-located worker, and Low for the MOI. The unmitigated frequency is Extremely Unlikely due to the robust design and construction of the Waste Hoist Support Structure. Therefore, this event is Risk Class II for the facility worker and co-located worker, and IV for the MOI.

The preventive engineered feature of the Waste Hoist Brakes reduce the event frequency to Beyond Extremely Unlikely. No preventive administrative features are credited for additional mitigated frequency reduction.

No mitigative engineered or administrative features were selected for reduction of consequences.

Thus, this suite of controls reduces the Risk Classification to III for the facility worker and co-located worker, and IV for the MOI.

Loss of Confinement at the Waste Shaft Station due to Drop of Vehicle/Equipment from the Waste Collar

Event CH/RH-UG-10-005a is the representative event for a loss of confinement at the Waste Shaft Station resulting from the drop of a vehicle or equipment (e.g., forklift) down the Waste Shaft. The IC of the Waste Shaft Access Configuration prevents direct access to the Waste Shaft and the WIPP WAC IC ensures the waste constituency and its confinement within a metal container of sound integrity. The MAR involved in the event involves two CH facility pallets or two RH Waste Canisters. The CH facility pallets are the bounding MAR. The Extremely Unlikely determination is due to the additional Waste Shaft Access Configuration IC that prevents direct access to the Waste Shaft. The unmitigated frequency is Extremely Unlikely with High radiological dose consequences to the facility worker and co-located worker, and Moderate for the MOI. Therefore, this event is Risk Class II for the facility worker and co-located worker, and III for the MOI.

There are no preventive engineered features for this event. The AC that prevents vehicles/equipment from entering the Waste Shaft Collar Room unless the Waste Shaft Conveyance is present, and requires Waste Shaft Access Door 156 to remain closed until the waste load has been removed from the conveyance is credited with reducing the likelihood for the event 1 frequency bin. This is due to the sequence of barriers (e.g., access doors, gates, pivot rails) which must be aligned and administrative actions required to be taken by the toplander to provide access to an open Waste Shaft. Therefore, a full frequency bin reduction is taken for this AC. Therefore, the mitigated frequency of this event is reduced to Beyond Extremely Unlikely.

No engineered or administrative mitigators were selected for risk reduction.

Thus, this suite of controls reduces the risk to III for the facility worker and co-located worker, and IV for the MOI.

3.3.2.3.4 Direct Exposure Events

Direct exposure events addressed in this evaluation include direct radiation exposure and contact hazards associated with non-radioactive HAZMAT (DOE-STD-5506-2007, Event 13) and are postulated to occur in the OA, WHB, or UG. The direct exposure events addressed are due to ionizing radiation within the CH or RH Waste Containers, potential contamination on the Waste Containers, and decay product buildup on HEPA filters. The ionizing radiation is associated with the waste material or the HEPA filter media. All direct radiation exposure events identified in the hazard evaluation table in WIPP-021 have an acceptable risk level without additional controls beyond the application of the ICs described in Section 3.3.2.3 with regard to the RH Facility Cask, LWFC, and Hot Cell Complex Shielding, as applicable. The RPP and the KEs described in Chapter 7.0, "Radiation Protection," provide for protection of the facility worker from this hazard as well as Type B Shipping Packages.

3.3.2.3.5 Nuclear Criticality Events

For the purpose of safety analysis, nuclear criticality events are included in this evaluation (DOE-STD-5506-2007, Event 14) and are postulated to occur in the OA, WHB, or UG with either CH or RH Waste. General causes for this event include an error by the generator site in packaging for fissile material or an inadvertent introduction of either moderation or reflection into the Waste Container. By nature of the operations performed on the WIPP site, there is no opening or repackaging of containers to inadvertently add extra material, reflection, or moderation. The programs that package the waste and the programs that subsequently characterize the waste containers, including Non-destructive Assay of waste, establish controls and processes to meet the limits established for fissile materials, as well as the limits for moderating and reflecting materials for shipment to WIPP. These programs are then certified by the Carlsbad Field Office (CBFO) review, and audited and approved by the EPA prior to sending shipments to WIPP. The credible extent of all upsets related to criticality safety are evaluated in the WIPP-016 and WIPP-020 and shown to remain subcritical. Therefore, all of the nuclear criticality events identified in the hazard evaluation table in WIPP-021 have an acceptable risk bin level without the application of additional controls. The criticality event frequencies are taken from criticality analyses (WIPP-016; WIPP-020) and evaluated as Beyond Extremely Unlikely based upon these criticality analyses. If WIPP is notified of a Waste Container that was improperly packaged by the generator, the container will be dispositioned through Waste Acceptability Control.

3.3.2.3.6 Externally Initiated, Natural Phenomena Hazard, and Other Hazard Events

Externally initiated events addressed in this evaluation include aircraft impacts (DOE-STD-5506-2007, Event 15), external vehicle accident impacts (DOE-STD-5506-2007, Event 16), DOE-STD-5506-2007, Event 17), external explosion (DOE-STD-5506-2007, Event 18), and external fire (DOE-STD-5506-2007, Event 19). The NPH-initiated events addressed in the evaluation include lightning (DOE-STD-5506-2007, Event 20), high wind (DOE-STD-5506-2007, Event 21), tornado (DOE-STD-5506-2007, Event 22), snow/ice/volcanic ash buildup (DOE-STD-5506-2007, Event 23), and seismic events (DOE-STD-5506-2007, Event 24; DOE-STD-5506-2007, Event 25).

In addition to the DOE-STD-5506-2007 minimum event list, four event types have been analyzed in the WIPP hazard evaluation. These events include external or internal flooding (Event 26), loss of power (Event 28), loss of ventilation (Event 29), and UG roof fall (Event 30). Events 26, 28, and 29 can have internal, external, and/or NPH initiators and are not unique to WIPP. The final event (Event 30, UG roof fall) is initiated by the NPH associated with the nature of the UG. This event is unique to the WIPP facility. These events are postulated to occur in the EXT, OA, WHB, and UG and are postulated to involve CH and/or RH Waste. Table 3.3-9 lists the externally and NPH-initiated events that are postulated

to have a worker unacceptable risk ranking (Risk Class I or Risk Class II) and require further evaluation to reduce the risk.

One NPH-initiated hazard evaluation event and one other-initiated hazard evaluation event (see Table 3.3-9) required further evaluation to reduce worker consequences. These events involved a seismic event with subsequent fire (CH/RH-WHB-25-001a) and a lightning initiated fire near CH Waste containers in the WHB (CH/RH-WHB-20-001a).

Externally Initiated, Natural Phenomena Hazard, and Other Hazards

The following section provides a discussion of each preventive and mitigative control credited for an Externally, NPH, or Other Initiated event followed by a discussion of the representative event (two total) and the specific controls selected for risk reduction for each event. For a discussion of the credited ICs see Section 3.3.2.3 above. The following controls require inclusion as SS controls in the TSR:

Engineered Preventers

No engineered preventers were selected for risk reduction.

Administrative Preventers

No administrative preventers were selected for risk reduction.

Engineered Mitigators

Contact-Handled Waste Handling Confinement Ventilation System. The CH WH CVS provides a confinement barrier with HEPA filters providing the capability to limit releases of airborne radioactive contaminants from the CH Bay or Room 108. These features reduce the consequences to the co-located worker and MOI (HEPA filtration). The CH WH CVS was credited for the following WHB events:

CH/RH-WHB-20-001a

Administrative Mitigators

No administrative mitigators were selected for risk reduction.

External-, Natural Phenomena Hazard - and Other-Initiated Event Descriptions

Seismic event with Subsequent Fire in WHB

Event CH/RH-WHB-25-001a is the representative event for a seismic event with subsequent fire occurring in the WHB. The IC of the WHB being seismically qualified ensures the building does not collapse due to the seismic event, the WHB being of noncombustible construction IC reduces the likelihood for fire ignition and growth (i.e., limited combustibles), the RH Facility Cask/LWFC IC limits the RH contribution to the event consequences, and the WIPP WAC IC ensures the waste constituency and its confinement within a metal container of sound integrity. The MAR involved in the event is the WHB inventory. The CH Waste in the CH Bay is the bounding MAR. The unmitigated frequency is Unlikely with Low radiological dose consequences to the facility worker, Moderate for the co-located worker, and Low for the MOI. The facility worker radiological dose consequences are Low as a seismic event with subsequent fire would be slow to develop and there are multiple exits from the WHB that

would allow the facility worker to exit the area. This event is Risk Class III for the facility worker, II for the co-located worker, and III for the MOI.

No preventive or mitigative controls were identified for this event.

This is event is conservatively analyzed. From SAND 78-1596, the most conservative calculated estimate of the 1,000-year acceleration at the WIPP is 0.075 g. For additional conservatism, a peak design acceleration of 0.1 g is selected for the WIPP DBE. The WHB and other structures are designed to withstand an earthquake of 0.1 g. The frequency of this earthquake would be lower than 1E-3 per year. a conditional probability of less than 0.1 for a subsequent fire would reduce the frequency of a seismic + fire event to an Extremely Unlikely bin. The Moderate consequence and an Extremely Unlikely frequency would make it a Risk Bin III event for the co-located worker.

The equipment that can fail and impact waste containers during a seismic event are falling objects (e.g., lights, fire suppression sprinkler lines) and other overhead equipment not seismically rated in the structure that are not qualified to the “Code of Record” earthquake (i.e., 0.1g PGA). The incidental impact of this equipment on waste containers is accounted for in the DRs as stated in DOE STD-5506-2014, Table 4.4.5-1 for the Code of Record seismic event.

Additional conservatisms in this analysis include:

- The bounding waste container, SWB, is at the WIPP WAC limit of 560 PE-Ci. The 95th percentile container is at a loading of 160 PE-Ci.

A substantial pool fire and direct flame impingement would be required to ignite gear lubricant due to its flashpoint of greater than 392 °F. In the unlikely event that lubricant is ignited, all of it has to leak and accumulate close enough to an SWB so that fifty percent of the fuel energy is absorbed by the SWB. The dose to the co-located worker is 5.1 rem for an SWB at average loading of 21.5 PE-Ci. The dose to the co-located worker becomes 23 rem for an SWB at 95th percentile loading of 160 PE-Ci. The dose to the co-located worker is 76 rem for an SWB at WIPP WAC loading of 560 PE-Ci. The dose to the co-located worker is 97 rem for two SWBs one at WIPP WAC and other at 95th percentile loading (WIPP-019). The dose to the co-located worker would be lower than 97 rem if more than two SWBs are involved because DOE-STD-5506 allows a use of DR of 0.5 for more than two SWBs. The impacted SWB at an average or 95th percentile loading gives a co-located worker dose which is in Low Consequence Threshold, according to DOE-STD-3009-2014.

The risk from this event is low due to the conservative nature of the analysis. Therefore, no controls are selected for this event even though it is Risk Bin II for the co-located worker. This event remains as a Risk Classification of III for the facility worker, II for the co-located worker, and III for the MOI.

Lightning Strike initiates Waste Container Fire in the Waste Handling Building

Event CH/RH-WHB-20-001a is the representative event for a lightning strike initiated fire affecting a Waste Container. The IC of the RH Facility Cask/LWFC limits the RH contribution to the event consequences and the WIPP WAC IC ensures the waste constituency and its confinement within a metal container of sound integrity. The MAR involved in the event is one CH Waste Container or one RH Waste Canister. The unmitigated frequency is Unlikely with Low radiological dose consequences to the facility worker, Moderate for the co-located worker, and Low for the MOI. Therefore, this event is Risk Class III for the facility worker, II for the co-located worker, and III for the MOI.

There are no preventive engineered or administrative features for this event.

Event radiological consequence mitigation is provided by the active engineered feature of the CH WH CVS that reduces radiological dose consequences to the co-located worker to Low.

Thus, this suite of controls reduces the Risk Classification to III for the facility worker, co-located worker, and MOI.

Table 3.3-10 provides a summary to each credited control identified during the hazard evaluation. In certain unique cases, a control is listed more than once due to a unique variation in the control's description due to particular event characteristics such as a location (e.g., CH Bay versus Waste Shaft Access Area). The specific events for which each control was credited are identified in the discussions above regarding each event category.

Table 3.3-10. Credited Control Summary

Control	Description	Event Type	Class	Usage
Aboveground Liquid-Fueled Vehicles/ Equipment Prohibition	Liquid-fueled vehicles/equipment are prevented from entering the CH Bay, Room 108, and/or the Waste Shaft Access Area when TRU Waste is present and not in a closed Type B Shipping Package. This prohibition reduces the likelihood for pool fires. The CH Bay and Room 108 are separated from the Waste Shaft Access Area by a normally closed roll-up door. Therefore, the CH Bay and Room 108 can be in Waste Handling Mode while the Waste Shaft Access Area is not thereby allowing access to the UG for non-Waste Handling activities. However, aboveground liquid-fueled vehicles are required to be removed from the Waste Shaft Access Area, Waste Handling Mode declared, and then waste can be transported to the UG.	E-1, Fire	SS	Preventer
Real-time Monitoring at Isolation Bulkheads	When performing work activities in proximity to Panel 6 and/or Panel 7, Room 7 radiological monitoring of the work area shall be performed to detect abnormal levels in the area in the event of another exothermic event behind the bulkhead.	E-2, Explosion	SS	Mitigator
CH WH CVS	The CH WH CVS provides a confinement barrier with HEPA filters providing the capability to limit releases of airborne radioactive contaminants from the CH Bay, Room 108, or the Waste Hoist Tower when moving CH Waste into the CLR. These features reduce the consequences to the co-located worker and MOI (HEPA filtration).	E-1, Fire	SS	Mitigator
	The CH WH CVS provides a confinement barrier with HEPA filters providing the capability to limit releases of airborne radioactive contaminants from the CH Bay or Room 108. These features reduce the consequences to the co-located worker and MOI (HEPA filtration).	E-1, Fire E-7, NPH	SS	Mitigator

Control	Description	Event Type	Class	Usage
Facility Cask Loading Room, CUR, and Transfer Cell Shielding	The FCLR, CUR, and Transfer Cell are constructed of thick concrete for shielding which reduce the gamma and neutron dose rates below acceptable worker safety thresholds. This DF reduces the consequences the facility worker when processing RH Waste Containers or events involving RH Waste in the outside of a Type B Shipping Package and Facility Cask/LWFC.	E-4, Direct Exposure	SS	IC
Facility Pallet	The facility pallet provides shielding of CH Waste Containers from direct flame impingement. This reduces the consequences to all receptors by ensuring that CH Waste Containers remain intact (e.g., no lid loss with waste ejection) and therefore, the ARF/RF factors are lower as compared to unconfined burning ARF/RFs.	E-1, Fire	SS	Mitigator
Fuel Tanker Prohibition	Fuel Tanker trucks are prohibited from entering the WHB Parking Area Unit south of the WHB. Prohibition of Fuel Tankers from the WHB Parking Area Unit reduces the likelihood for a large source of liquid-fuel to contribute to a large pool fire affecting CH Waste located in the CH Bay.	E-1, Fire	SS	Preventer
Limit of two Liquid-fueled Vehicles/ Equipment	UG vehicle and equipment interactions are controlled when operating in proximity to the CH Waste Face by restricting vehicle/equipment access (e.g., emplacement, waste extraction). Limiting the number of liquid-fueled vehicles/equipment operating in proximity to the CH Waste Face reduces the likelihood for collisions as well as limiting the quantity of liquid combustibles available to be involved in a fire event.	E-1, Fire	SS	Preventer
Panel 6 and Panel 7, Room 7 Isolation Bulkheads	The installation of isolation bulkheads mitigates the consequences of a TRU Waste Container over-pressurization event in a closed disposal panel. The Panels/Rooms are isolated on both the intake and exhaust sides such that there is no airflow into or out of the enclosed space so that static conditions are created that resist transmission of particulate and allow for gravitational settling.	E-2, Explosion	SS	Mitigator

Control	Description	Event Type	Class	Usage
Pre-operational Checks of UG Vehicles/Equipment	UG vehicles/equipment in an active disposal room, within the VEZ, between the VEZ and the CH Waste Face, or within the Waste Shaft Station when CH Waste is present, shall have a pre-operational check prior to their use. Inspection provides assurance that the vehicle and/or equipment are checked for such conditions as braking, steering, leaks, and cleanliness prior to being permitted to operate near CH Waste, thereby reducing the likelihood of collisions and/or combustible liquid leaks that could lead to a fire or pool fire event.	E-1, Fire	SS	Preventer
RH Waste Cask (Facility Cask/LWFC) Shielding	The lead liner surrounding the enclosed facility canister ensures worker exposure is reduced below threshold levels (e.g., direct exposure).	E-4, Direct Exposure	SS	IC
RH Waste Cask (Facility Cask/LWFC) Structural Integrity	The robust construction of the RH Facility Cask ensures that RH Waste is protected from anticipated insults (e.g., fire, deflagration, loss of confinement) by minimizing damage to the Waste Canister that encloses the waste, thereby reducing the likelihood of the release of radiological material.	E-1, Fire E-2, Explosion E-7, NPH E-8, Other	SS	IC
TRU Waste Outside the WHB	The TRU Waste Outside the WHB control requires that aboveground TRU Waste Containers outside of the WHB are contained within a closed Type B Shipping Package. This ensures that Shipping Packages are not opened until located inside the WHB and in the event that TRU Waste must be moved outside the WHB (e.g., returned to waste generator), that it is placed into a closed Type B Shipping Package prior to exiting the WHB. This reduces the likelihood for TRU Waste Containers to be outside of a Type B Shipping Package and vulnerable when not protected by the WHB. No additional frequency or mitigation reduction is credited as a result of this control.	All	SS	Preventer
Type B Shipping Package	The Type B Shipping Package design is certified by the NRC for transport of radiological wastes on the public highways. Extensive testing has been performed to ensure the waste is protected from release in the case of an upset condition. The passive DF of the Type B Shipping Package prevents radiological releases from its contained loads and reduces the likelihood for excessive gamma and/or neutron exposure to workers.	All	SS	IC

Control	Description	Event Type	Class	Usage
UG Fuel and Oil Storage Rooms located away from Waste Handling and Storage Areas	The UG Fuel and Oil Storage locations are defined in the configuration of the UG and are located north of the storage and transport of radiological waste areas. This passive DF reduces the likelihood that fires and/or explosions at the UG Fuel or Oil Storage locations could affect the handling and storage of waste.	E-2, Explosion	SS	IC
UG Liquid-fueled Vehicle/Equipment Attendance: Notification	Liquid-fueled vehicles/equipment are Attended in the VEZ, the Waste Shaft Station when CH Waste is present, and the active Disposal Room. Attendance of liquid-fueled vehicles/equipment provides assurance that reasonable mitigative action is taken, and UG facility workers are notified in the event of a need to take precautions such as evacuation. An Attendant is independent of vehicle/equipment operation; however, only one Attendant is required in a given area. This control applies to the Waste Shaft Station when CH Waste is present, within the VEZ, between the VEZ and the CH Waste Face, and within an active Disposal Room.	E-1, Fire E-3, Loss of Confinement	SS	Mitigator
UG Liquid-fueled Vehicle/Equipment Attendance: Spotter	Liquid-fueled vehicles/equipment are Attended within the VEZ, the Waste Shaft Station when CH Waste is present, and the active Disposal Room. Attendance of liquid-fueled vehicles/equipment provides assurance that unnecessary vehicles will be removed from the area, spotting of vehicles/equipment when operating in close proximity, observation for indications of vehicle/equipment misoperation (e.g., leaks, steering, braking), and conditions that could lead to a fire. An Attendant is independent of vehicle/equipment operation however, only one Attendant is required in a given area. The attendance of liquid-fueled vehicles reduces the likelihood of vehicle collisions and/or conditions (e.g., fuel leak) that could lead to a pool fire involving CH Waste.	E-1, Fire	SS	Preventer
UG Lube Truck Prohibited from Disposal Rooms and Waste Shaft Station when CH Waste is present	Lube trucks are prohibited in the Disposal Rooms and Waste Shaft Station when CH Waste is present which prevents large pool fires involving CH Waste. Prohibiting the Lube Truck from entry into the Disposal Rooms and Waste Shaft Station when CH Waste is present reduces the likelihood for large liquid combustible fires.	E-1, Fire	SS	Preventer

Control	Description	Event Type	Class	Usage
UG Vehicle/ Equipment Automatic Fire Suppression System	UG vehicles/equipment with liquid-combustible capacity operating within the VEZ, in proximity to the CH Waste Face, between the VEZ and the CH Waste Face, or within the Waste Shaft Station when CH Waste is present, are equipped with an automatic fire suppression system that detects and suppresses developing stage fires associated with fuel and hydraulic line leaks, thereby reducing the likelihood of fires.	E-1, Fire	SS	Preventer
UVFS/IVS	The UVFS/IVS provides HEPA filtration of UG exhaust air. This system also draws potential airborne contamination away from normally occupied locations in the UG. These features reduce the consequences to the co-located worker (HEPA filtration) and reduce the consequences to the facility worker by drawing contamination away from normally occupied areas of the UG.	E-1, Fire E-2, Explosion/ Deflagration E-3, Loss of Confinement	SS	Mitigator
Vehicle Barriers	Vehicle Barriers are a configured set of concrete barriers (e.g., Jersey type barriers) consisting of two continuous sections. The first section includes two rows of interconnected concrete barriers, installed approximately 5 feet west of the CH Bay/TMF common wall extending south from the TMF exterior wall a minimum distance of 25 feet. The second section consists of one row of interconnected concrete barriers positioned at least 25 feet south of the CH Bay exterior southwest wall extending west between Airlock 100 to a point approximately 5 feet west of the CH Bay/TMF common wall (approximately 85 feet in total length) to intersect with the double row of barriers. An opening with a gap of ≤ 3 feet at the intersection of the east-west barrier and the double row of barriers is permitted for fire department access. The Vehicle Barriers prevent vehicles from crashing through the CH Bay southwest wall, or being parked adjacent to the wall, and reduce the likelihood of either event. The barriers provide a significant impediment to inadvertent vehicle movement and prevent vehicles from passing through or parking adjacent to the wall. Prohibition of vehicles in this area reduces the likelihood for pool fires that could affect CH Waste within the CH Bay.	E-1, Fire	SS	Preventer

Control	Description	Event Type	Class	Usage
Vehicle Barrier Removal	Liquid-fueled vehicles/equipment may require entry into this area to perform maintenance (e.g., WHB fire water header). To accomplish this, individual concrete sections within the barrier will be removed to permit vehicle/equipment access. During these periods, liquid-fueled vehicles/equipment within the exclusion zone will be Attended to reduce the likelihood for vehicle collisions and/or pool fires, and vehicles/equipment in the WHB Parking Area Unit will be Attended when in motion to reduce the likelihood for inadvertent entry into the exclusion zone. During these periods, the Vehicle Barriers in combination with the administrative requirement to attend vehicles/equipment within the exclusion zone and attend vehicles/equipment in motion outside of the WHB Parking Area Unit exclusion area will reduce the likelihood of collisions and/or pool fires in this area.	E-1, Fire	SS	Preventer
VEZ	A VEZ, defined as the area between the leading edge of the lead escort vehicle and the trailing edge of the lag escort vehicle, and the nominal width of drift, shall be established about the TRU Waste being transported, and be maintained for the duration of the transport. Only one liquid-fueled vehicle is allowed in the VEZ unless other vehicles are required to repair the transport vehicle or to transfer the waste to another transport vehicle. This reduces the likelihood of vehicle collisions which could result in a fire event involving CH Waste.	E-1, Fire	SS	Preventer
Waste Handling Program: Waste Conveyance Control	The Waste Shaft Conveyance is required to be present at the Waste Shaft Collar prior to waste entering the Waste Shaft Collar Room; once the Waste Shaft Conveyance is loaded with waste the Waste Shaft Access doors shall be closed and remain closed while waste is present in the Waste Shaft; and the Waste Shaft Conveyance shall remain present at the Waste Shaft Station until the waste load is moving away from the Waste Shaft. Additionally, the Waste Shaft Conveyance shall be present at the Waste Shaft Station prior to bringing TRU Waste into the station for uploading. This reduces the likelihood of a drop of a vehicle and/or equipment down an open Waste Shaft.	E-1, Fire E-3, Loss of Confinement	SS	Preventer
Waste Hoist Brakes	The Waste Hoist Brakes work in conjunction with the Waste Hoist Support Structure to control movement of the conveyance up and down the Waste Shaft. This prevents an uncontrolled drop of a loaded Waste Conveyance by reducing the likelihood of uncontrolled conveyance movement.	E-3, Loss of Confinement	SS	Preventer

Control	Description	Event Type	Class	Usage
Waste Hoist Support Structure	The Waste Hoist Support Structure is the physical structure that supports the Waste Hoist, and is designed to withstand the DBE. The Waste Hoist Support Structure is constructed of non-combustible materials. The Waste Hoist systems in the Waste Shaft and all shaft furnishings are designed to resist the dynamic forces of the hoisting operations (the dynamic forces are greater than the seismic forces on the UG facilities). The design reduces the likelihood for failure of the Waste Conveyance.	E-1, Fire E-3, Loss of Confinement E-7, NPH	SS	IC
WHB Design for High Wind	The WHB is constructed as Type II per Standard on Types of Building Construction (NFPA 220), and serves as a confinement barrier to control the potential for release of hazardous and/or radioactive material. The WHB is designed and constructed to withstand the DBT with 183 mph winds and a translational velocity of 41 mph, a maximum rotational velocity radius of 325 feet, a pressure drop of 0.5 psi and a pressure drop rate of 0.09 psi per second. This passive DF reduces the likelihood for impacts to Waste Containers located in the WHB which could result in a loss of confinement of radiological material.	E-7, NPH	SS	IC
WHB Design for Noncombustible Construction and curbing	The WHB is constructed primarily of metal and concrete with its exterior surfaces and roofing consisting of noncombustible materials and curbing extending above the floor of the WHB. This passive construction DF reduces the likelihood for small fires propagating into a large fire and also reduces the likelihood for a fire originating external to the WHB to penetrate the outer wall.	E-1, Fire E-5, External E-7, NPH	SS	IC
WHB Design for Roof Loading	The roof of the WHB is designed to withstand 27 lb/ft^2 of snow load. The 100-year recurrence maximum snowpack for the WIPP region is 10 lb/ft^2. This passive DF reduces the likelihood for collapse of the WHB roof that could result in the loss of confinement of radiological material.	E-7, NPH	SS	IC
WHB Design for Seismic	The WHB is designed and constructed to withstand the DBE with 0.1 g peak acceleration and a 1,000-year return interval.	E-7, NPH	SS	IC
WHB Design for Waste Shaft Access	The Waste Shaft Collar Area prevents direct access to the Waste Shaft. Vehicles/equipment entering the access area must make a 90 degree turn toward the Waste Shaft.	E-1, Fire E-3, loss of confinement	SS	IC

Control	Description	Event Type	Class	Usage
WHB Fire Suppression System	The WHB fire suppression system provides suppression of fires in the WHB before they become large enough to affect waste and/or propagate to areas where waste is outside of a closed Shipping Package, thereby reducing the likelihood of fires.	E-1, Fire	SS	Preventer
WIPP WAC Compliance	Compliance with the WAC reduces both the likelihood and consequences of adverse events. The WIPP WAC provides assurance that waste meets specific criteria for the containers in which it is packaged as well as the contents of each package. The package itself provides some resistance to adverse events (e.g., drops). The WIPP WAC limits radionuclide composition, quantities of liquids, constituencies of contents, combinations of materials which are relied upon when determining consequences from upsets to the containers. Upon opening of a Type B Shipping Package, a visual inspection of the payload ensures that Waste Containers are not “suspect” per DOE-STD-5506-2007.	All	SS	IC
	When unloading CH Waste Containers from their Type B Shipping Packages, the Waste Containers are visually inspected, to the degree permitted without disassembling the waste assembly, for signs of “suspect” containers. Suspect containers, if found during unpackaging or through the normal course of waste emplacement, are isolated and handled in accordance with specific procedures to prevent worker injury.	E-2, Explosion	SS	Mitigator

3.3.2.4 Defense-in-Depth

As an approach to facility safety, defense-in-depth has extensive precedent in nuclear safety philosophy. It builds in layers of defense against release of HAZMAT so that no one layer by itself is completely relied upon. This includes protection of the barriers to avert damage to the facility and to the barriers themselves and it includes further measures to protect the public, workers, and the environment from harm in case these barriers are not fully effective.

The first layer of defense-in-depth typically involves barriers to contain radiological and non-radiological HAZMAT. The second layer of defense-in-depth typically involves preventive systems to protect those barriers, and the third typically involves systems to mitigate radiological and/or non-radiological HAZMAT upon barrier failure.

During the hazard evaluation process, potential preventive and mitigative features are identified for each unique and representative event contained in WIPP-021. The features are either design or administrative in nature. The specific features credited for MOI and worker protection as either preventing or mitigating each event are identified in WIPP-021. The remainder of the preventive and mitigative features for a specific event identified in the hazard evaluation tables provide defense-in-depth for that event. Not all available design or administrative features are credited. Features are selected based on providing the

greatest MOI and worker protection and additional controls are selected if they are required to prevent/mitigate different initiators for representative events within the hazard evaluation event bin.

Safety SSCs, SACs, and SMPs are identified to provide MOI and worker protection. The safety SSCs and SACs are described and evaluated in Chapter 4.0, "Safety Structures, Systems, and Components," carried forward to Chapter 5.0, "Derivations of Technical Safety Requirements," and protected in the TSRs (DOE/WIPP 07-3733, *Waste Isolation Pilot Plant Technical Safety Requirements*). The ACs are carried forward to Chapter 5.0 "Derivations of Technical Safety Requirements" and protected in the TSRs. The TSRs impose controls to protect the ICs, SSCs, SACs, and ACs that provide protection of the public, the worker, or provide a significant contribution to defense-in-depth. For this DSA, of the controls that were not specifically credited for at least one event, none were determined to be a major contributor to defense-in-depth and therefore, no additional controls beyond those identified in Section 3.3.2.3 were designated as SS SSCs or SACs.

The SMPs summarized in Chapters 7.0 through 18.0 of this DSA support the defense-in-depth strategy by establishing programmatic and facility-specific requirements that directly or indirectly help to ensure an acceptable level of safety at WIPP. These programs and requirements directly influence safety by ensuring that the facility and systems are designed, constructed, and maintained to acceptable standards, the facility hazards are understood and controlled to protect the workers, measures are taken to prevent accidents, and properly qualified and trained personnel are responsible for facility operation. The SMP chapters identify KEs to be addressed by these programs to ensure protection of workers.

3.3.2.5 Facility Worker Safety

The hazard evaluation for TRU Waste Handling identified a number of Waste Handling process hazards that could potentially result in worker injury or exposure to radiological and non-radiological HAZMAT. Reduction of the risk to workers from accidents is accomplished at the WIPP primarily by SSCs (active and passive) and ACs that reduce the frequency or consequences of hazardous events. This is consistent with 10 CFR 830.205 and the defense-in-depth philosophy. For the DSA, a worker is defined as any person onsite, including workers in the WHB and UG, workers in other buildings onsite, and visitors under access control.

For assigning consequence levels within the hazard evaluation tables, the facility workers and co-located workers are assessed separately. As noted previously, the facility worker is qualitatively assessed based on radiological consequences based on the guidance of DOE-STD-3009-2014. The co-located worker is assessed semi-quantitatively based on a calculation of dose (TED) at 100 meters from the surface release location. The resultant consequence levels are given in the hazard evaluation table in WIPP-021 for each hazard evaluation event. Applicable controls specifically providing protection to the worker were selected in the hazard evaluation for each of the major release categories and are discussed below.

Fires

The prevention of fires is of primary importance to protecting workers. The first level of protection is ensuring that TRU Waste complies with the WIPP WAC. This control is a preventer in that TRU Waste Container contents are restricted (e.g., liquids, pyrophorics, chemical characteristics, flammable gas generation). The WIPP WAC is also a mitigator in that the container is of noncombustible (i.e., metal construction) and the MAR per container is bounded thereby limiting consequences. Additionally, the noncombustible construction of the WHB and the noncombustible salt of the UG prevent the propagation of fires. The RH Waste Cask/LWFC and the facility pallet protect the RH Waste Containers, as applicable, from exposure to fires and thereby limit the involvement of TRU Waste in fires and/or limits the release of radiological material if involved in a fire.

Prevention of fires also entails the fire suppression systems on vehicles and equipment in the UG and the fire suppression system in the WHB. Performance of pre-operational checks on vehicles in proximity to TRU Waste Containers, controlling the number of vehicles operating in proximity to TRU Waste Containers, controlling the Waste Transport Path, prohibiting the UG Lube Trucks from Disposal Rooms and the Waste Shaft Station when CH Waste is present, prohibiting liquid-fueled vehicles from the CH Bay, Room 108, and the Waste Hoist Tower when TRU Waste is present, Vehicle Barriers protecting southwest CH Bay wall, and attendance of vehicles/equipment in proximity to TRU Waste Containers in the UG, all work to prevent the occurrence of fires and/or to allow detection, mitigation, and evacuation of workers when necessary.

For facility workers, mitigation of fires is accomplished by either self-observation and egress when personnel are in position to observe the condition and evacuate or, in the event of a fire in the UG, by the vehicle/equipment Attendant initiating the notification of facility workers of adverse conditions so that they can evacuate. For co-located workers, the applicable HEPA filtration system is the primary means to reduce their consequences.

Except for self-observation and egress, each of these controls was credited for worker protection in Section 3.3.2.3 as SS controls. SMPs such as Radiation Protection, Operational Safety, Training, and Emergency Preparedness, provide additional defense-in-depth for protection of workers.

Explosions/Deflagrations

The prevention of explosions/deflagrations is important to protecting workers. The first level of protection is ensuring that TRU Waste complies with the WIPP WAC. This control is a preventer in that TRU Waste Container contents are restricted (e.g., liquids, pyrophorics, chemical characteristics, flammable gas generation). The WIPP WAC is also a mitigator in that the container is of noncombustible (i.e., metal construction) and the MAR per container is limited thereby limiting consequences.

For facility workers, mitigation of explosions/deflagrations is accomplished primarily by the WIPP WAC to ensure that TRU Waste Containers will not be subject to deflagrations. When unloading a payload from the Type B Shipping Package, Waste Assemblies are inspected for indications of noncompliance. Through visual examination and radiological surveys of TRU Waste packages, suspect containers are isolated and a response plan developed. Waste generators may also notify WIPP of potential WIPP WAC noncompliance and WIPP would respond by identifying the location of the affected container(s), isolating them, and developing a response plan in accordance with the Waste Acceptability Control (LCO 3.7.1). Isolating a container involves prohibiting movement of the container or within the vicinity of the container until the situation is reviewed and a plan developed to safely resolve the condition. For co-located workers, the applicable HEPA filtration system is the primary means to reduce their consequences.

Each of these controls was credited for worker protection in Section 3.3.2.3 as SS controls. SMPs such as Radiation Protection, Operational Safety, Training, and Emergency Preparedness, provide additional defense-in-depth for protection of workers.

Loss of Confinement

The prevention of loss of confinement is of importance to protecting workers. The first level of protection is ensuring that TRU Waste complies with the WIPP WAC. This control is a preventer in that TRU Waste Containers provide resistance to impacts (e.g., metal construction). The WIPP WAC is also a mitigator in that the MAR per container is limited thereby limiting consequences. The RH Waste Cask/LWFC protect

the RH Waste Containers from impacts and thereby prevent the release of radiological material. The Waste Hoist is a robust conveyance for movement of TRU Waste to the UG.

Prevention of loss of confinement also entails pre-operational checks on vehicles in proximity to TRU Waste Containers, controlling the number of vehicles operating in proximity to TRU Waste Containers, controlling the Waste Transport Path, Waste Conveyance braking system, and control of the Waste Conveyance.

For facility workers, mitigation of radiological material releases is accomplished by either self-observation and egress when personnel are in position to observe the condition and evacuate or, in the event of a loss of confinement in the UG, by the vehicle/equipment Attendant initiating the notification of facility workers of adverse conditions so that they can evacuate. For co-located workers, the applicable HEPA filtration system is the primary means to reduce their consequences.

Except for self-observation and egress, each of these controls was credited for worker protection in Section 3.3.2.3 as SS controls. SMPs such as Radiation Protection, Operational Safety, Training, and Emergency Preparedness, provide additional defense-in-depth for protection of workers.

Direct Exposure

The prevention of radiation exposures is of importance to protecting workers. The first level of protection is ensuring that TRU Waste complies with the WIPP WAC. This control is a preventer in that TRU Waste is packaged as either CH Waste (i.e., low container surface doses allow contact with containers) or RH Waste (i.e., surface doses exceeding 200 mrem/hr) which require shielding. For RH Waste, the Type B Shipping Packages protect the worker until the waste is unloaded. The Hot Cell Complex shielding reduces doses to workers during Hot Cell Complex operations, and the RH Waste Cask/LWFC protect the worker by dose reduction during transport to the UG and emplacement.

Prevention of over-exposure of workers is also accomplished through the RPP and Hot Cell Complex access control, specified as KEs in Chapter 7.0, “Radiation Protection.”

The Type B Shipping Packages, Hot Cell Complex shielding, and the RH Waste Cask/LWFC were credited for worker protection in Section 3.3.2.3 as SS controls. SMPs such as Radiation Protection, Operational Safety, Training, and Emergency Preparedness, provide additional defense-in-depth for protection of workers.

The design of WIPP and its processes includes numerous controls to protect the facility worker from hazards. Radioactive material can create an inhalation hazard through release by fire, deflagration, loss of confinement, or a direct exposure hazard. SMPs enhance worker safety by ensuring that personnel are properly trained to perform their jobs, personnel are provided with necessary protective equipment, and records of personnel exposure are maintained.

SMPs provide accident mitigation for facility workers by providing personnel protection to facility workers who are trained to know and identify hazardous conditions and to take self-protective actions upon detection of adverse conditions. The SMPs provide protective equipment, training, and instructions for accepted work practices. In addition to reducing risk for the co-located worker, SS controls identified in Section 3.3.2.3 provide for facility worker protection by mitigating and preventing releases.

Externally-, Natural Phenomena Hazard-, and Other-Initiated

The prevention of Externally-, NPH-, and Other-Initiated events is of importance to protecting workers. The first level of protection is ensuring that TRU Waste complies with the WIPP WAC. This control is a preventer in that TRU Waste Containers provide resistance to impacts (e.g., metal construction). The WIPP WAC is also a mitigator in that the MAR per container is limited, thereby limiting consequences. The RH Waste Cask/LWFC protect the RH Waste Containers from impacts and thereby prevent the release of radiological material. The Waste Hoist is a robust conveyance for movement of TRU Waste to the UG. The WHB is designed for design basis NPH events.

For facility workers, mitigation of radiological material releases is accomplished by either self-observation and egress when personnel are in position to observe the condition and evacuate or, in the event of a loss of confinement in the UG, by the vehicle/equipment Attendant initiating the notification of facility workers of adverse conditions so that they can evacuate.

Except for self-observation and egress, each of these controls was credited for worker protection in Section 3.3.2.3 as SS controls. SMPs such as Radiation Protection, Operational Safety, Training, and Emergency Preparedness, provide additional defense-in-depth for protection of workers.

Safety Management Programs

Chapter 7.0, “Radiation Protection,” describes the organization and functional responsibilities for radiological control, documents the RPP structure, and defines the radiological control management systems necessary to implement the program. KEs of this program ensure that programs and equipment are maintained to protect facility personnel from radiation involved with contamination and direct streaming. The KEs of the RPP are as follows:

- **KE 7-1**: Proper placement and operation of Continuous Air Monitors (CAMs).
- **KE 7-2**: Control access and entrance to RH Hot Cells.
- **KE 7-3**: Contamination control to address potential upcasting from the UG.

Chapter 8.0, “Hazardous Material Protection,” describes the organization and functional responsibilities for the Industrial Safety Program and defines the hazardous material management systems necessary to implement the program. KEs of this program assure that programs and equipment are maintained to protect facility personnel from hazardous materials. The KEs of the Hazardous Material Protection program are as follows:

- **KE 8-1**: Establish provisions to monitor and control air quality to ensure UG workers are protected from VOCs; protective measures include posting hazardous areas, establishing monitoring requirements, ensuring local ventilation, and requiring personal protective equipment such as respiratory protection as needed.

Chapter 10.0, “Initial Testing, In Service Surveillance, and Maintenance,” presents programs for demonstrating that testing is performed to ensure the SS SSCs and DFs subject to degradation; other systems that perform important defense-in-depth functions; equipment relied on for the safe operation, safe shutdown of the nuclear facility, and for maintaining the facility in a safe shutdown condition as documented in the safety basis and safety support systems meet their functional requirements and performance criteria such that the WIPP operations have assurance SSCs fulfill normal and safety functions described in this DSA; and ensuring that maintenance activities are conducted, in accordance

with DOE Order 433.1B, *Maintenance Management Program for DOE Nuclear Facilities*, to preserve and restore the availability, operability, and reliability of the WIPP SSCs important to the operation of the facility. The KEs of the in service inspections are as follows:

- **KE 10-1**: Development and implementation of in service inspections for DFs.
- **KE 10-2**: Testing, calibration, operability, and preventive/corrective maintenance in accordance with applicable code requirements, manufacturer recommendations, established technical requirements, and engineering judgement consistent with tracking, trending, and failure history.
- **KE 10-3**: Tracking and trending of the performance and deficiencies of the equipment covered by KE 10-2 above.

Chapter 11.0, "Operational Safety" describes the safety provided by conduct of operations and FPPs. In accordance with regulatory requirements, the conduct of operations specifically focuses on the bases of operations such as management, organization, the institutional safety provisions, procedures, training, and human factors. The KEs of the Operational Safety Program are as follows:

- **KE 11-1**: Routine maintenance and inspection of non-Waste Handling vehicles in the UG for leaks and accumulation of combustible materials (fire protection).
- **KE 11-2**: Formal Fire Protection Engineer (FPE) combustible control inspections to include inspection criteria, specified frequency of inspections, documentation of identified issues, issue disposition, tracking and trending of issues, and performance metrics.
- **KE 11-3**: Operability and testing of equipment (audible, visual) used for abnormal event communication/notification between workers (both aboveground and in the UG) and the CMR.
- **KE 11-4**: Placement of fuel barrier of absorbent materials at the static Waste Face when waste emplacement or retrieval has not occurred for a period of 10 days.
- **KE 11-5**: Fire prevention/suppression controls include the following KEs:
  - UG diesel powered equipment is evaluated for fire risk in accordance with NFPA 122. All equipment determined to pose an unacceptable fire risk in the NFPA 122 analysis will be protected with an automatic fire suppression system prior to use.
  - Areas in the UG where there is an increased combustible loading (e.g., refueling station, maintenance shop, combustible storage area, maintenance offices, lunch room, oil storage area) will be protected by automatic fire suppression systems.
  - Ignition sources (e.g., hot work, designated smoking areas, portable heaters, electrical equipment) are controlled in accordance with the WIPP FPP and Design Control Program.
  - UG combustible materials are controlled in accordance with the WIPP FPP (e.g., combustible control zone around personnel conveyances, combustible load permit process).
- **KE 11-6**: Hoisting and Rigging Program which protects safety SSCs, waste packaging, and personnel from dropped loads.
- **KE 11-7**: Mine entrance requirements impacting personnel safety (e.g., CAM operation, radiological conditions, ventilation capabilities, personnel training, personnel limits for in service conveyances, back-up power).

- **KE 11-8**: Mine evacuation requirements (e.g., unobstructed planned escape routes, mine exit markings, communications, Abnormal Operations Procedures).
- **KE 11-9**: Equipment deficiency tracking (including equipment in reduced status) that identifies, tracks, and evaluates safety impacts and implements compensatory measures until equipment is returned to service.
- **KE 11-10**: Ground control inspections are conducted routinely, and remedial actions performed for unstable ground conditions by qualified personnel.
- **KE 11-11**: Maintenance and configuration control of ground management equipment.
- **KE 11-12**: Procedures address the actions to be performed by operators in response to CMR notifications, annunciators, and other types of facility displays that indicate an abnormal condition.

Chapter 12.0, "Procedures and Training," describes the processes used to develop, verify, and validate the technical content of procedures and the WIPP training programs as well as the processes used to keep them current through feedback, periodic reviews, and continuous improvement processes. The KEs of procedures and training are as follows:

- **KE 12-1**: Preparation of procedures related to safe operation of the facility and/or safety SSCs with participation by end users and appropriate subject matter experts, verified to be technically correct, validated to be workable as written.
- **KE 12-2**: Worker training and qualifications on responding to incidents (e.g., use of rescue equipment, assembly areas).
- **KE 12-3**: Training and qualification programs are designed and developed to ensure personnel obtain initial requisite knowledge and skills resulting in abilities to effectively execute assigned duties during normal, abnormal, and emergency conditions. Continuing training is provided to maintain requisite knowledge and skills as warranted for changes such as emergent Evaluation of the Safety of the Situation (ESS) documents. Personnel are not permitted to perform assigned duties independently until requisite training and qualification are complete.

Chapter 14.0, "Quality Assurance," describes the organization, quality improvement (including corrective measures), document control and records management for the WIPP work processes, and independent assessments. The KEs of QA are as follows:

- **KE 14-1**: Password protection of safety significant Programmable Logic Controllers.

Chapter 15.0, "Emergency Preparedness Program" describes the organization and functional responsibilities for response to the scope of emergencies identified at WIPP. The objective of the program is to minimize the impact of emergency events on the health and safety of plant personnel, the general public, property, and the environment. The KEs of emergency preparedness and management are as follows:

- **KE 15-1**: Hazards are identified and analyzed through a technical planning basis process to provide pre-determined protective actions and Protective Action Recommendations to protect workers and the public.
- **KE 15-2**: Emergency plans and procedures provide the framework for actions to be taken by workers and responders.

- **KE 15-3**: Emergency response capabilities (e.g., operable equipment, minimum staffing, Incident Command System, Emergency Operations Center) are identified and maintained to respond and protect workers, public, property, and environment.
- **KE 15-4**: Emergency drills and exercises are planned and conducted to provide validation of plans, procedures, and response capabilities.

Chapter 17.0, "Management, Organization, and Institutional Safety Provisions," describes the overall structure of the organizations and entities involved in safety-related functions, including key responsibilities and interfaces; and establishes the safety programs that promote safety consciousness and morale, including safety culture, contractor assurance, configuration control, occurrence reporting, and staffing and qualification. The KEs of management, organization, and institutional safety provisions are as follows:

- **KE 17-1**: Configuration management of SSCs identified in accordance with DOE Order 433.1B.

Chapter 18.0, "WIPP Waste Acceptance Criteria Compliance Program," addresses the WIPP WAC compliance process implemented at WIPP with regard to the handling, storage, and disposal of CH and RH Waste on-site. The KEs of the WIPP WAC Compliance Program are as follows:

- **KE 18-1**: The WIPP M&O Contractor verifies each container is part of an approved waste stream with the enhanced Acceptable Knowledge process prior to authorizing shipment in WDS.
- **KE 18-2**: The WIPP M&O Contractor reviews approved Waste Stream Profile Forms to verify the information provided is complete and accurate, and that the waste stream complies with Hazardous Waste Facility Permit Waste Analysis Plan and the WIPP WAC (DOE/WIPP 02-3122, *Transuranic Waste Acceptance Criteria for the Waste Isolation Pilot Plant*) prior to authorization for shipment.
- **KE 18-3**: The WIPP M&O Contractor verifies the Hazardous Waste Facility Permit requirement for confirmation of certified waste prior to shipment to the WIPP from the DOE sites.
- **KE 18-4**: The WIPP M&O Contractor performs Generator Site Technical Reviews, which are reviews of DOE Sites' and Certified Programs' implementation of WIPP requirements (excluding DOE activities).
- **KE 18-5**: The MAR statistics for waste certified for future shipment to WIPP are reviewed periodically by the WIPP M&O Contractor (no less frequently than annually) to ensure the values stated in DSA Tables 3.4-1 and 3.4-2 continue to provide conservative unmitigated consequences in the Safety Analysis; further each payload proposed for shipment to WIPP is additionally screened to ensure handling and emplacement of small groupings of containers will remain bounded by the Safety Analysis.

3.3.2.6 Environmental Protection

The potential for airborne radiological releases in the event that Waste Containers are breached is the primary concern with respect to TRU Waste Handling, storage, and disposal operations. The potential for radiological releases is minimized by those preventive and mitigative DFs and ACs identified in Section 3.3.2.3. The features that provide defense-in-depth also provide environmental protection. Additional protection from HAZMAT and waste is described in Chapter 8.0, "Hazardous Material Protection."

3.4 Accident Analysis

This section quantitatively analyzes the postulated accident scenarios selected for accident analysis, consistent with the selection criteria identified in DOE-STD-3009-2014. The purpose of the accident analysis is to identify SC SSCs and SACs necessary to maintain accident consequences such that the accident evaluation guideline criterion of 25 rem for the MOI is not exceeded or significantly challenged (established as exceeding 5 rem in DOE-STD-3009-2014). To establish SC SSCs and/or SAC controls, the accident consequences are analyzed for the MOI located at the site boundary. Additionally, the accident analysis evaluation includes all events from the hazard evaluation table (WIPP-021) that have either High or Moderate unmitigated consequences to the MOI. As shown in Table 3.3-9, no events were identified that resulted in High radiological dose consequences to the MOI. Two events, CH/RH-UG-01-005a1 and CH/RH-UG-10-005a were determined to be Moderate to the MOI.

The models and assumptions used in the analysis for determining the amount of radioactivity released to the environment and the extent of exposure to the MOI are provided in the following sections to meet the requirements of DOE-STD-3009-2014 and follow the guidance given in DOE-STD-5506-2007. The conservatism in the assumptions over-estimates rather than underestimates potential consequences consistent with DOE-STD-3009-2014. This provides a reasonable assurance that the safety envelope of the facility is defined, the design of the facility is adequate, and the TSRs derived will provide for the protection of the MOI, the worker, and the environment.

The hazard evaluation included operational, external, and NPH events. For completeness, the hazard evaluation includes events from each of the major categories addressed in DOE-STD-5506-2007 that have potential consequences to the MOI (internally initiated fire, explosion, loss of confinement; externally initiated events; and NPH-initiated events).

Issues have arisen concerning the way DOE-STD-5506-2007 treats different types of MAR. As the safety basis analysis conforms to requirements of DOE-STD-5506-2007, changes in the standard could propagate to this DSA.

3.4.1 Accident Identification Methodology

3.4.1.1 Source Term

The ST is calculated using the five-factor formula outlined in DOE-STD-5506-2007, as taken from the DOE-HDBK-3010-94. Complex postulated accident scenarios (e.g., tine puncture with collision) may employ multiple five-factor formula calculations that are added together to get the ST for the event, which results in the following equation:

$$ST = \Sigma(MAR_j \times DR_j \times ARF_j \times RF_j \times LPF_j)$$

Where:

ST	=	Total Source Term (PE-Ci)
MAR_j	=	Material at risk for scenario j (PE-Ci)
DR_j	=	Damage Ratio for scenario j
ARF_j	=	Airborne Release Fraction for scenario j
RF_j	=	Respirable Fraction for scenario j
LPF_j	=	Leak Path Factor for scenario j.

The first two parameters are directly related to the specification of the inventory. The MAR is the amount of radioactive material available to be acted upon by a given physical stress. The DR is the fraction of MAR that is actually acted upon by the physical stress. From these definitions, a degree of interdependence exists between the definitions of the MAR and DR because various combinations of MAR and DR values can be used to define the same product value. For the postulated analysis in this document, the MAR is expressed as a product of the number of containers of TRU Waste and/or Waste Container assemblies involved in the postulated event and using the statistical approach to MAR as outlined in DOE-STD-5506-2007 associated with the Waste Container/Waste Container assembly.

The ARF is the coefficient used to estimate the amount of material that can be suspended in the atmosphere and made available for airborne transport under the specific set of induced physical stresses. The RF is the fraction of airborne radionuclides (as particles) that can be transported through air and inhaled into the human respiratory system and is commonly assumed to include particles 10 microns aerodynamic equivalent diameter or less. Within DOE-STD-5506-2007, the ARF and RF terms are specified as a single term ARF*RF. Additionally, an effective ARF*RF may be calculated for complex STs.

The LPF is the fraction of the radionuclides made airborne that challenge the interface of the facility and ambient environment (i.e., these radionuclides do not get filtered or deposited inside the facility as a result of natural mechanisms).

3.4.1.2 Material at Risk

As noted in Section 3.4.1.1, the MAR is expressed as a product of the number of Waste Containers or Waste Container assemblies involved in the postulated event and using the statistical approach to MAR outlined in DOE-STD-5506-2007 associated with the Waste Container/Waste Container assembly. The Waste Container and Waste Container assembly are dependent on the type of TRU Waste (CH or RH) and the form of the waste. The MAR for each individual postulated accident event is given with the event description.

The WIPP receives Waste Containers from various generators. The Waste Containers are assembled by the generator in standard waste assembly configurations (Table 3.3-8) and placed in Type B Shipping Packages for over-the-road transportation to WIPP.

The generator limits the radiological inventory of each individual Waste Container as given in Table 3.4-1 and Table 3.4-2 based on type of material being packaged and Waste Container type. Once inside the WIPP WHB, the Waste Containers are removed from the Shipping Packages and transported to the UG. The CH Waste is transported to the UG on facility pallets, which are limited to four waste assemblies (in two two-tier stacks), two TDOPs, or one SLB2. The RH Waste is transported to the UG using an RH Waste cask.

From Table 3.4-1 and 3.4-2, the CH MAR is dependent on multiple factors, which lead to a number of possible CH Waste configurations. The determination of TED associated with each postulated event scenario will be analyzed for a number of configurations. For example, a fuel-pool fire in the CH Bay could involve waste in drums or POCs in three-pack, four-pack, or seven-pack configurations; shielded container assemblies; direct-loaded SWBs; SLB2s; or drums overpacked in other drums, SWBs, SLB2s, or TDOPs. Additionally, the waste form dictates the inventory of each container. A drum containing solidified or vitrified waste may contain over 20 times the activity of a drum containing other material forms (e.g., contaminated combustible solids such as job control waste). To facilitate the calculation of doses for each scenario involving CH Waste, the following six waste configurations were analyzed, which are bounding and representative of CH Waste configurations:

1. **Direct-loaded CH drums**. The direct-loaded drums are assumed to be 55-gallon drums in a seven-pack arrangement because this configuration results in the maximum PE-Ci per waste assembly for direct-loaded drums. These drums contain neither POCs nor solidified or vitrified waste.
2. **Shielded containers**. The shielded container is designed to hold an inner 30-gallon container of RH Waste. Shielded container assemblies consist of a three-pack arrangement.
3. **Direct-loaded CH SWBs or SLB2s**. The direct-loaded CH SWBs or SLB2 are assumed to be within the maximum PE-Ci per waste assembly for direct-loaded containers. These containers contain neither POCs nor solidified or vitrified waste.
4. **Overpacked CH Waste Containers**. The direct-loaded CH Waste Containers are assumed to be in 85-gallon overpacks in a four-pack arrangement.
5. **Drums containing POCs or CCOs**. The POC or CCO is a 55-gallon drum. The waste assembly is a seven-pack arrangement with each drum containing a pipe component, which results in the maximum PE-Ci per waste assembly for POCs or CCOs.
6. **Drums with solidified or vitrified waste**. The drum containing the solidified or vitrified waste is assumed to be a 55-gallon drum. The waste assembly is assumed to be a seven-pack arrangement with each drum containing solidified or vitrified waste, which results in the maximum PE-Ci per waste assembly for drums with solidified or vitrified waste.

The analysis limits the waste within the CH Bay or Room 108 to an equivalent of 80 waste assemblies with a maximum of 32 waste assemblies within any one storage location. Additionally, the analysis limits the waste within the RH portion of the WHB RH to two RH Shipping Packages in the RH Bay and 12 RH Waste drums in the Upper Hot Cell. The outside parking area is limited to 50 Type B CH Shipping Packages and 12 Type B RH Shipping Packages. Additionally, Type B Shipping Packages are assumed not to be opened until they are within the WHB.

The statistical MAR analysis using methodology recommended by DOE-STD-5506-2007 is used for accident scenarios that involve multiple containers. The bounding MAR Limit from DOE-STD-5506-2007, Table 3.4-2, for fully characterized Waste Containers is: One container at WIPP WAC, second container at 95th percentile value, and the remaining containers at average (mean) value.

The data used to calculate waste statistics is provided by the WIPP Waste Information Tracking Systems Group, which is stored in the WIPP Waste Data System (WDS). The mean and the 95th percentile container for the existing WIPP Waste Container type inventory are calculated. The statistical analysis for various Waste Containers received from all shippers are in Table 3.4-1 (WIPP-057, *Statistical Parameters for Bounding MAR Limits at the WIPP*). Table 3.4-1 includes waste containers at WIPP and certified but not shipped waste containers from all waste generators.

Table 3.4-1. Material at Risk Limits Based on Entire Waste Container Population

Waste Container Type	WIPP WAC PE-Ci Limit	Mean / Container PE-Ci	95th Percentile Container, PE-Ci	Total Containers Emplaced at WIPP/ Cert. Not Shipped
55-gallon drum	80	2.09	10.3	97,482
100-gallon drum	80	1.17	4.38	35,708
SWB	560	7.51	21.2	7,240
SLB2	560	26.7	133	234

Waste Container Type	WIPP WAC PE-Ci Limit	Mean / Container PE-Ci	95th Percentile Container, PE-Ci	Total Containers Emplaced at WIPP/ Cert. Not Shipped
Pipe Overpack Container	1,800	15.4	35.5	26,884
SWB-Overpack (OP)	1,200	52.3	327	6,124
TDOP-Direct	560	3.41	14.7	32
TDOP-OP	1,200	20.4	75.7	6,050
Shielded Container (SCA) -Direct	80	0.06	0.12	9

The SRS Waste Container statistics were used in the analysis as shown in Table 3.4-2. Table 3.4-2 includes waste containers at WIPP from SRS and certified but not shipped waste containers at SRS. The SRS statistics are used because the mean and the 95th percentile container for all containers in Table 3.4-2, except POCs, is higher for SRS waste when compared to the statistics in Table 3.4-1 derived for Waste Containers from all the shippers to the WIPP. Maximum WAC allowed container MAR values were used when no statistical basis was available.

Table 3.4-2. Material at Risk Limits Based on SRS Waste Container Population

Waste Container Type	WIPP WAC PE-Ci Limit	Mean / Container PE-Ci	95th Percentile Container, PE-Ci	Total Containers Emplaced WIPP/ Cert. Not Shipped
55-gallon drum	80	6.15	46.0	6,848
SWB	560	21.2	160	1,374
SLB2	560	26.7	133	234
Pipe Overpack Container	1800	7.99	11.7	663
SWB-OP	1200	154	603	1,275
TDOP-OP	1200	35.4	229	2,197

Note: If for any Waste Container type, the SRS MAR limits are lower than the values in Table 3.4-1, then Table 3.4-1 values are used for that Waste Container type (e.g., POC mean values of 15.5 PE-Ci and standard deviation of 10.2 PE-Ci) in the analysis.

3.4.1.3 Damage Ratio

From DOE-HDBK-3010-94, the DR is that fraction of material actually impacted by the accident conditions. Waste Containers are damaged by fires; explosions; loss of confinement events, which include drops, punctures, and crushes; and external and NPH events. The DRs applied to each event were consistent with DOE-STD-5506-2007, Section 4.4, and are given in Table 3.4-3.

Table 3.4-3. Waste Container Damage Ratios

Postulated Accident Stress	Damage Ratio				
	Drum	SWB, SLB2, and RH Canister	Overpacked Container [a]	Pipe Overpack Container	Solidified or Vitrified Waste
Lid loss	1.0	NA	NA	NA	NA
Seal failure < 10 drums or ≤ 2 SWBs	1.0	1.0	0.1	0 [b]	0.1
Seal failure ≥ 10 drums or > 2 SWBs	0.5	0.5	0.1	0 [b]	0.1
Puncture from tine or shrapnel	0.1	0.05	0.05	0.05 (0.1) [c]	0.05
Low impact	0.01	0.01	0.005	0 [b]	0.005
Moderate impact	0.1	0.1	0.05	0 [b]	0.05
High impact	1.0	1.0	0.5	0.01	0.5
First- or second-tier drop	0	0	0	0 [b]	0
Third-tier drop	0.01	0.01	0.005	0 [b]	0.005
Fourth-tier drop	0.1	0.1	0.05	0 [b]	0.05
Vertical crush	0.5	0.5	0.25	0 [b]	0.25
Drop down shaft	1	1	1	0.5	0.5
Object dropped into Waste Shaft with waste pallet at the bottom	1	1	0.5	0.01	1
Code of record event building collapse	0.01	0.01	0.005	0.001	0.005
Building collapse	0.1	0.1	0.05	0.01	0.05

NA = not applicable

a The Facility Cask is considered to be an over pack for the RH Waste Canister.

b The DRs for POCs containing combustible waste are being evaluated through a Potentially Inadequate Safety Analyses (PISA) (see Section 3.6 for details).

c Applicable for powder.

As noted in Section 3.4.1.2, Waste Containers enter the WIPP facility as a payload in either a CH Shipping Package or an RH Shipping Package. The Shipping Packages have been designed and certified as Type B Shipping Packages when the containers are closed. The Shipping Package certification testing included a sequence of tests that (1) dropped the closed containers multiple times from 30 feet onto an unyielding surface; (2) dropped the containers multiple times onto a 6-inch-diameter bar; (3) placed the containers within an outdoor, engulfing, 30-minute fire of JP-4 type jet fuel; and (4) submitted the containers to a simulated submersion test. The closed Shipping Packages, although damaged, survived the tests in that they did not release their payload contents. For outside events (not in the WHB), the Shipping Packages are modeled as being within their design criteria, and a DR of 0 is applied.

When the closed Shipping Packages are within the WHB, they are considered inside the impact testing parameters (DR of 0 is applied). According to DOE-STD-5506-2007, Shipping Packages that meet

current Type B criteria normally are expected to survive facility fires typical of those that may occur in the DOE Complex where TRU Wastes are stored or handled.

Key assumptions associated with the assignment of DRs are as follows:

- TRU Waste in the WIPP facility is in Waste Containers that are of sound integrity and the lids remain closed.
- Type B Shipping Packages prevent a release of radionuclides from fire events inside the WHB.
- Type B Shipping Packages (opened or closed) prevent a release of radionuclides from mechanical insults associated with explosion events and loss of confinement events.
- Type B Shipping Packages prevent a release of radionuclides from fire events outside the WHB.

3.4.1.4 Airborne Release and Respirable Fractions

The ARF*RF values that were used in the analysis of postulated events were taken directly from DOE-STD-5506-2007 (Section 4.5, Table 4-5.1) and are given in Table 3.4-4 for events with a thermal release mechanism and in Table 3.4-5 for a mechanical insult release mechanism. The values were selected based on Waste Container contents and postulated event scenario. From DOE-STD-5506-2007, TRU Waste is analyzed in two basic material forms (contaminated combustible solids and solidified/vitrified waste).

Table 3.4-4. Airborne Release Fraction*Respirable Fraction from DOE-STD-5506-2007

Waste Form	Fire ARF*RF	Low-stress Impact ARF*RF	High-stress Impact ARF*RF
Contaminated combustible solid outside a Waste Container	1E-2	1E-4	2E-3
Contaminated combustible solid inside a Waste Container	5E-4	1E-4	2E-3
Solidified/vitrified waste	1E-6	7E-5	7E-4

Table 3.4-5. Mechanical Insult Airborne Release Fraction*Respirable Fraction from DOE-STD-5506-2007

Mechanical Stress	Contaminated Combustible Solid ARF*RF	Solidified/Vitrified Waste ARF*RF
Spill or impact (not reducing the volume by greater than 25%)	1E-4 (6E-4)*	7E-5
High stress impact (reducing the volume by greater than 25%)	2E-3	7E-4

* Applicable for powder.

From DOE-STD-5506-2007, lid loss and content ejection only happen with drums directly loaded with contaminated combustible solids. The ARF*RF value for lid loss and content ejection is a combination of the fire ARF*RF inside and outside the drum as well as impact ARF*RF because material ejected from the drum will impact the floor before burning. DOE-STD-5506-2007 specifies that 33 percent of the contents are ejected onto the floor and that 67 percent of the contents stay in the drum. Thus, the effective ARF*RF for lid ejection/content loss and fire is 3.7E-3 (3.7E-3 = 0.33*1E-2 + 0.33*1E-4 + 0.67*5E-4).

For those events involving vehicle impact (low-stress event), the DR from the vehicle impact portion of the event becomes the fraction burning unconfined in the fire portion of the event. For example, drums crushed by a vehicle traveling at a low speed are assigned a DR of 0.1 from Table 3.4-3. The effective ARF*RF for the impact and fire involving the impacted drums is 1.45E-3 (1.45E-3 = 0.1*1E-2 + 0.9*5E-4).

DOE-STD-5506-2007 specifies that the internal deflagration will only result in lid loss and content ejection for waste drums. The standard specifies that the internal deflagration will eject 40 percent of the contents and 5 percent of that material will be ignited by the deflagration and burn unconfined. The ejected materials will also be subjected to flexing in air, which has the same ARF*RF as a spill. The 60 percent of the contents that remains in the container is subjected to confined manner. Thus, the effective ARF*RF for internal deflagration is 5.4E-4 (5.4E-4 = 0.4*1E-4 + 0.4*0.05*1E-2 + 0.6*5E-4).

For the seismic event with a subsequent fire involving direct-loaded CH drums or SWBs, the DR from the building-collapse portion of the event becomes the fraction burning unconfined in the fire portion of the event. For drums or SWBs impacted by a code of record design basis seismic event (DR = 0.01), the effective ARF*RF for the fire involving the impacted drums is 5.95E-4 (5.95E-4 = 0.01*1E-2 + 0.99*5E-4). For drums or SWBs impacted by a building collapse during a BDBA (DR = 0.1), the effective ARF*RF for the fire involving the impacted drums is 1.45E-3 (1.45-3 = 0.1*1E-2 + 0.9*5E-4). These ARF*RFs are also used for events where there is a collateral damage from falling debris and the building does not collapse in a seismic event.

3.4.1.5 Leak Path Factor

For the unmitigated and mitigated analysis, an LPF of 1 was conservatively assumed as directed by DOE-STD-5506-2007 (Table 6.3-1).

3.4.1.6 Dose-per-Activity Modeling

The MOI dispersion analysis methodology is based on Option 3 of DOE-STD-3009-2014. The WIPP Dispersion Modeling Protocol documents how Nuclear Waste Partnership LLC (NWP) meets the requirements of Section 3.2.4.2 for Option 3 of DOE-STD-3009-2014 (WIPP-054, *WIPP Dispersion Modeling Protocol*). DOE concurred with this Dispersion Modeling Protocol (DOE/CBFO-15-3554, *Basis for Approval WIPP Dispersion Modeling Protocol*).

The TED for the MOI at 2.9 kilometers, minimum site boundary distance (WIPP-002), was calculated for the WIPP DSA using the *MACCS2 Code Version 1.13.1 Release Notes* (RSICC 2006) in accordance with the methodology outlined in DOE-STD-5506-2007 and DOE Office of Health, Safety, and Security (HSS) Safety Bulletin 2011-02, *Accident Analysis Parameter Update*, and DOE-STD-3009-2014. The WIPP site meteorological tower and station is located approximately 1,970 feet northeast of the WHB. The hourly meteorological data are at a measured windspeed height of 10 meters. The TED calculations are based on the release of a single curie of plutonium-239 from ground level directly to the environment (i.e., not passed through filtration). Plume meander was accounted for in the four release durations as modeled by MACCS2. Re-suspension was included in the WIPP dispersion analysis for all scenarios based on the algorithm in the MACCS2 code. A deposition velocity of 0.0027 m/s (for 1 micron aerodynamic equivalent diameter particle) and surface roughness of 10 cm were used. Four release durations were assessed as determined by the accident scenario: 3 minutes, 20 minutes, 1 hour, and 2 hours.

The maximum resultant TED incurred by the MOI has been calculated to be 2.9 rem per curie for a three-minute release, 2.0 rem per curie for a 20-minute release, 1.6 rem per curie for a one-hour release, and 1.1 rem per curie for a two-hour release. These TED values are based on the 95th quantile dose level

without regard to sector (e.g., direction independent methodology as described in DOE-STD-3009-2014) and are used in the MOI analysis of all events except Beyond Evaluation Basis Accidents (BEBAs) events that use mean statistical values.

The following are the conservatisms used in the site specific modeling protocol for onsite worker at 100 meters:

- Used highest unit curie dose value from the 5 years of meteorological data instead of average of the 5-year value recommended by DOE-STD-3009-2014.
- ICRP-72 value used for worker (at 100 meters) instead of ICRP-68 value recommended by DOE-STD-3009-2014.
- One micron AMAD Pu-239 particle used for worker doses instead of 5 micron AMAD Pu-239 particle.

The onsite dispersion analysis using site-specific meteorology and conditions in MACCS2 provides a conservative χ/Q value for all four release durations as compared to the value of 3.5×10^{-3} sec/m^3, recommended by DOE-STD-3009-2014 (WIPP-002). MACCS2 code, a Gaussian plume model, used in the analysis produces conservative results. For scenarios, where credit cannot be taken for the building wake effect, the default χ/Q value of 3.5×10^{-3} sec/m^3 may not provide a conservative estimate of atmospheric dispersion (NSRD-2015-TD01, “Technical Report for Calculations of Atmospheric Dispersion at Onsite Locations for Department of Energy Nuclear Facilities”). According to NUREG-1140, building wake effects significantly reduce the concentrations of airborne materials at close in distances (e.g., 100 meter). WIPP does not have any significant buildings in the vicinity of the exhaust plenum for the UG ventilation system, and the releases are modeled as ground level releases with no credit for building wake effects. The substantial size of the WHB, however, will produce a building wake such that the TED (220 rem per curie) based on the default χ/Q value is applicable for the onsite analysis for scenarios in which the release occurs from the WHB and the WHB remains largely intact. Note that the default χ/Q value and associated TED is applied independent of release duration.

For the other WHB events and all UG events evaluated at the 95th percentile level the maximum resultant TED incurred by the onsite worker at 100 meters has been calculated to be 630 rem per curie for a three minute release, 430 rem per curie for a 20-minute release, 360 rem per curie for a one-hour release, and 260 rem per curie for a two hour release.

The TED factor applied to a given scenario accounts for the duration that the receptor is exposed to the plume for a given radiological release of material. A longer exposure duration for the same number of curies results in more plume meander, resulting in more plume dispersion, and therefore, a smaller radiological dose.

A three-minute release duration is used for an outdoor release or in the MOI analysis of a loss of confinement event when a building structure is breached. A 20-minute release duration is used for an outdoor fire or in the MOI analysis of a fire release that occurs through a breach of the WHB. A one-hour release duration is used in the MOI analysis for a release through the WHB ventilation system. A two-hour release duration is used in the onsite worker and MOI analyses for events that result in releases through the UG ventilation system.

With a release through the UG or WHB ventilation system, the release of the ST to the atmosphere to form the plume occurs over a longer duration than it takes for the material to become airborne at the source. In-building contaminant transport modeling of the WHB demonstrates that the rate of release of

the airborne material to the atmosphere is a function of both the ventilation flow rate and the indoor volume. A one-hour release duration is judged to be applicable for the WHB based on the modeling (Hayes; ETO-B-183, *WHB CH Airborne Contamination Clearance Rates*). The model conservatively assumes that released radiological material has a uniform concentration in the entire enclosed volume instantaneously. This material is then released to the environment by the ventilation system.

A two-hour release duration is assumed for ST releases that exit the UG through the UG ventilation system based on qualitative analysis that makes use of evaluation of sample data collected during the 2014 event (WIPP-002). The release profile constructed from the sample data shows a prolonged release over several hours. A two-hour release is consistent with Section 3.2.4.2 of DOE-STD-3009-2014, which specifies exposure durations of two-hours for most events and eight-hours for slowly developing scenarios. The presence of a large interior volume gives dispersion time and space to spread the plume prior to release from the UG, slowing down the release to the outside environment.

The large fire event in the Waste Shaft is an example of an event in the UG in which the source term release is assumed to bypass the ventilation system. In this event, the ST from the waste-burning fire at the bottom of the shaft is driven up the shaft by the buoyant forces generated by the fire. This event is modeled as an outdoor release of 20-minute duration for the MOI analysis given that no credit is taken for confinement by the Waste Hoist Tower that encloses the shaft.

In accordance with Health, Safety, and Security (HSS) Safety Bulletin 2011-02, a WIPP site-specific dry deposition velocity of 0.0027 meters per second was developed using GENII, version 2 and used in the MACCS2 code. In addition, the surface roughness length has also been updated to use a 10 centimeter surface roughness length. The details of the updated dry deposition velocity and surface roughness are described in WIPP-045, *GENII Version 2 Deposition Velocity of Unmitigated/Unfiltered Release*.

3.4.1.7 Consequence

Consequence assessment calculations are determined for the MOI located at the site boundary (at approximately 2.9 kilometers) for releases from the WHB and the UG Exhaust Shaft vent. Atmospheric transport is the only significant release and exposure pathway during normal operations and accident conditions during the disposal phase. Based on the site characteristics information in Chapter 1.0, “Site Characteristics,” surface water and groundwater transport from normal or accidental releases of radioactive material is not considered.

For each postulated accident event, the TED incurred by the MOI is calculated by multiplying the ST or activity (PE-Ci) being released into the atmosphere by the unit dose per activity incurred by the receptor of interest as shown in the following:

$$D_i = ST \times TED_i$$

Where:

D_i = TED incurred by receptor i (rem)
ST = Source Term for event of interest (PE-Ci)
TED_i = Receptor in unit dose per activity (rem/PE-Ci).

The following were used as an input data in the analysis:

- The Waste Container inventories are within the Table 3.4-2 limits.
- Waste Containers are of sound integrity.

- A facility pallet holds a maximum of four waste assemblies (e.g., four SWBs).
- A single vehicle in the UG can carry the following:
  - Four SWBs, or
  - Four SWB-OP, or
  - Four CH Waste assemblies in a two-tier array (each assembly has seven drums in it), or
  - Two Shielded Container Assemblies, or
  - One RH canister (only one RH canister is moved at a time in the UG).

3.4.2 Accident Selection

Accident selection is the process of identifying the events that require further evaluation in a mitigated hazard evaluation or an accident analysis. Events are identified for further evaluation based on the High or Moderate MOI consequences.

Table 3.3-9 lists those events from the hazard evaluation table that resulted in an unmitigated risk ranking of either Risk Class I or Risk Class II to the facility worker, co-located worker or MOI.

As shown in Table 3.3-9, all the events resulted in Low radiological dose consequences to the MOI except for a Large Pool Fire in Waste Shaft and Loss of Confinement at the Waste Shaft Station due to Drop of Vehicle/Equipment from the Waste Collar that challenge the Evaluation Guideline for MOI as defined in DOE-STD-3009-2014 and are analyzed in the accident analysis.

Mine experience and studies on earthquake damage to UG facilities (Pratt et al. 1978) show that tunnels, mines, wells, etc. are not damaged for sites having peak accelerations at the surface below 0.2 g. No design basis earthquake events are analyzed for the UG operations.

The NPH events higher than the design basis are analyzed as BDBA events. Operational events that assume a failure of credited controls (e.g., failure of WIPP WAC and Waste Hoist) are also analyzed as BDBA events.

3.4.3 Analysis of Design Basis/Evaluation Basis Accidents

The hazard scenarios, Large Pool Fire in Waste Shaft, event CH/RH-UG-01-005a1, and Loss of Confinement at the Waste Shaft Station due to Drop of Vehicle/Equipment from the Waste Collar, event CH/RH-UG-10-005a, challenge the Evaluation Guideline for MOI; therefore, they are analyzed as evaluation basis accidents in this section.

3.4.3.1 Large Pool Fire in Waste Shaft

CH/RH-UG-01-005a1 is an operational fire event that occurs at the bottom of the Waste Shaft during emplacement of waste assemblies.

3.4.3.1.1 Scenario Development

This event considers that a facility pallet of waste assemblies is sitting on the waste conveyance at the bottom of the Waste Shaft waiting to be transported for its final emplacement in the UG. The bounding scenario for a fire in the Waste Shaft is dropping a forklift with a 300-gallon fuel tank on a waste pallet sitting on the waste conveyance at the bottom of the Waste Shaft. The waste is subjected to a high-speed

crush and breach followed by the burning of fuel and waste. The following sequence of activities must transpire for this event to occur:

1. A loaded Waste Conveyance is sent down the Waste Shaft

    a. In order to initiate lowering the conveyance the empty Waste Handling Conveyance Loading Car must be withdrawn from the Collar to the Conveyance Loading Room (the Conveyance Loading Car does not go to the UG), the pivot-rails must be raised and the chain link gates (RH and CH side) closed; Doors 155 (RH shaft access door) and 156 (CH shaft access door) are also required to be closed.

    b. The Conveyance Loading Car is positioned in the Shaft Access Area (Conveyance Loading Room) which limits the available space in the Conveyance Loading Room. (The Conveyance Loading Car remains in the CLR/Collar throughout the downloading campaign.)

2. Intentionally disconnect the electrical control power from the Conveyance Loading Car.

3. Open Door 140, bring a forklift into the CLR.

4. Pick up and move the Conveyance Loading Car out of the Conveyance Loading Room through Door 140 (CH Bay to Conveyance Loading Room access roll-up door). The Conveyance Loading Car must be removed from the CLR since there is only about 6–8 feet between the north doors and the Conveyance Loading Car when it is in the CLR and the 6-Ton Forklift is 16 feet long and 6 feet, 5 inches wide. Additionally, there is only about 2 feet of clearance between the Conveyance Loading Car in the CLR and an open Door 156.

5. Close Door 140.

6. Open the doors on the north side of the Conveyance Loading Room.

7. Bring the forklift with the tank of diesel fuel into the Conveyance Loading Room from Airlock 115.

8. Close the doors on the north side of the Conveyance Loading Room.

9. Maneuver the forklift in the CLR with the tank of diesel fuel to align for access to the Waste Shaft Collar Room (right angle turn with limited space).

10. Open Door 156.

11. Drive the loaded forklift into the Waste Shaft Collar.

12. Open the Waste Shaft gate. (Note that the gate is interlocked with the Conveyance such that the Conveyance is halted when the gates are opened, unless positioned at the Collar or chaired at the Station. Therefore, there can be no inadvertency related to gate opening while the Conveyance is in motion since the hoist operator and toplander receive immediate feedback that the gate should not have been opened.)

13. Drive the forklift forward into the open shaft, crashing through the raised pivot-rails which are 14 inches high or threading the 77-inch wide forklift through the nominal 76-inch gap between the rails.

From the start of Activity 1 above through the completion of Activity 13, no more than a conservatively long estimate of 10–15 minutes may transpire from the time of initial waste transit (downloading) until the waste will have been removed from Conveyance at the Waste Station. It would be very difficult to accomplish this series of activities intentionally, without proper staging of equipment and personnel, in such a limited time frame.

An expected duration for the sequential performance of activities 2 through 5 is about 15 to 20 minutes. Activities 6 through 10 are expected to consume an elapsed 10 to 15 minutes. It is anticipated to take 2 to 3 minutes to perform activities 11 through 13. This would give a total time required of 27 to 38 minutes when only 10 to 15 minutes is expected to be available.

The frequency of this event is qualitatively determined to be Extremely Unlikely primarily due to the Waste Shaft Access Configuration IC that prevents direct access to the Waste Shaft, as supported by other considerations described in the hazard evaluation for this event in Section 3.3.2.3, such as the process deviations to result in this event would consist of a sequence of many unlikely human actions or errors for which there is no reason or motive; the above sequence of activities involved and their estimated durations to accomplish; not using multiple features such as the shaft access doors, fences, and upended rails that protect entry to the Waste Shaft Collar; etc.

3.4.3.1.2 Source Term Analysis

The bounding ST for this event involves one CH facility pallet with SWB-OPs. The SRS statistical MAR analysis from Table 3.4-2 is used in the methodology recommended by DOE-STD-5506. The first SWB-OP is at the inventory limit of 1,200 PE-Ci, the second container has a 95th percentile value of 603 PE-Ci, while the rest of the containers involved are at the average MAR of 154 PE-Ci. The SWB-OPs damaged by the impact are given a DR of 0.5 and a DR of 1.0 for their subsequent unconfined and confined burning.

The SWB-OPs impacted by the crush are given an ARF*RF of 2E-3 with a subsequent effective ARF*RF of 7.38E-4 for 2.5 percent unconfined burning. An LPF of 1 is assumed for the unmitigated analysis. The resultant ST for this postulated event is calculated as follows:

$ST = ST_{damage} + ST_{fire} = 2.11$ PE-Ci + 1.56 PE-Ci = 3.67 PE-Ci

ST_{damage} = (1,200 PE-Ci + 603 PE-Ci + 154 PE-Ci/SWB-OP × 2 SWB-OPs) × 0.5 × 2.0E-3 × 1 = 2.11 PE-Ci

ST_{fire} = (1,200 PE-Ci + 603 PE-Ci + 154 PE-Ci/SWB-OP × 2 SWB-OPs) × 1 × 7.38E-4 × 1 = 1.56 PE-Ci

3.4.3.1.3 Consequence Analysis

This event could result in a chimney effect up the Waste Shaft, therefore a 20-minute TED release value of 2.0 rem/Ci is used for the MOI. The DOE-STD-3009-2014 dispersion value of 220 rem/Ci is used for the co-located worker because the WHB is available to provide the wake effect (WIPP-002). The unmitigated inhalation radiological doses to the co-located worker and MOI are 8.1E+02 rem and 7.3 rem, respectively (WIPP-001).

3.4.3.1.4 Comparison to Consequence Thresholds

The onsite worker dose is classified as High and the MOI is classified as Moderate by the DOE-STD-3009-2014 criteria. The MOI dose just challenges the lower Moderate threshold of DOE-STD-3009-2014 evaluation guideline of 5–25 rem.

3.4.3.1.5 Summary of Safety Class SSCs, SACs, and TSR Controls

No preventive engineered feature is identified. The following administrative preventive SAC reduces the frequency of this event from Extremely Unlikely to Beyond Extremely Unlikely.

Waste Handling Program: The following features are credited.

- Once the Waste Shaft Conveyance is loaded with waste the Waste Shaft Access Door 156 shall be closed and remain closed while waste is present in the Waste Shaft. This reduces the likelihood for vehicles, equipment, and/or loads to drop down an open Waste Shaft into the shaft sump.

- The aboveground liquid-fueled vehicles are prohibited from being present in the Waste Shaft Access Area when CH Waste is present.

The above administrative preventive SAC provides a safety significant function because the MOI dose of 7.3 rem which slightly exceeds the 5 rem threshold for MOI. The use of conservative DRs, ARF*RF, and the release duration used for dispersion analysis supports the conclusion of controls not requiring a classification of SC.

3.4.3.2 Loss of Confinement at the Waste Shaft Station due to Drop of Vehicle/Equipment from the Waste Collar

CH/RH-UG-10-005a is an operational LOC event that occurs at the bottom of the waste shaft during emplacement of waste assemblies.

3.4.3.2.1 Scenario Development

This event considers that a facility pallet of waste assemblies is sitting on the waste conveyance at the bottom of the waste shaft waiting to be transported for its final emplacement in the UG. The bounding scenario for a LOC in the waste shaft is dropping a forklift with a waste pallet on a waste pallet sitting on the waste conveyance at the bottom of the waste shaft. The falling payload and its associated vehicle would impact the steel structure on top of the waste conveyance and then the waste containers on the conveyance would have a high stress. They could subsequently free fall another 100 feet to the bottom of the waste shaft. The sequence of activities that must transpire for this event to occur with CH Waste are similar to the ones described in Section 3.4.3.1.1 where instead of a fuel tank, a waste pallet is dropped. The specific steps for waste pallet emplacement in the UG are different than for the transfer of a fuel tank to the UG.

The frequency of this event is qualitatively determined to be Extremely Unlikely primarily due to the Waste Shaft Access Configuration IC that prevents direct access to the Waste Shaft, as supported by other considerations described in the hazard evaluation for this event in Section 3.3.2.3, such as the process deviations to result in this event would consist of a sequence of many unlikely human actions or errors for which there is no reason or motive; the above sequence of activities involved and their estimated

durations to accomplish; not using multiple features such as the shaft access doors, fences, and upended rails that protect entry to the Waste Shaft Collar; etc.

3.4.3.2.2 Source Term Analysis

The bounding ST for this event involves 2 CH facility pallet with SWB-OPs. The SRS statistical MAR analysis from Table 3.4-2 is used in the methodology recommended by DOE-STD-5506. The first SWB-OP is at the inventory limit of 1,200 PE-Ci, the second container has a 95th percentile value of 603 PE-Ci, while the rest of the containers involved are at the average MAR of 154 PE-Ci. The half of SWB-OP have a DR is 1.0 (for impact from drop down the shaft) and the other have a DR of 0.5 for catastrophic stress. The ARF*RF for this scenario is 2E-3 for a high energy stress of contaminated combustible solids. A LPF of 1 is assumed for the unmitigated analysis. The resultant ST for this postulated event is calculated as follows:

$ST = ST_{drop\text{-}shaft} + ST_{high\text{-}stress}$ = 4.22 PE-Ci + 6.16E-1 PE-Ci = 4.84 PE-Ci

$ST_{drop\text{-}shaft}$ = (1,200 PE-Ci + 603 PE-Ci + 154 PE-Ci/SWB-OP × 2 SWB-OPs) × 1.0 × 2.0E-3 × 1 = 4.22 PE-Ci

$ST_{drop\text{-}shaft}$ = (154 PE-Ci/SWB-OP × 4 SWB-OPs) × 0.5 × 2.0E-3 × 1 = 6.16E-1 PE-Ci

3.4.3.2.3 Consequence Analysis

This event uses a 2-hour TED release value of 1.1 rem/Ci is used for the MOI. The dispersion value of 260 rem/Ci for co-located worker is used (WIPP-002). The unmitigated inhalation radiological doses to the CW and MOI are 1.3E+03 rem and 5.3 rem, respectively (WIPP-017).

3.4.3.2.4 Comparison to Consequence Thresholds

The onsite worker dose is classified as High and the MOI is classified as Moderate by the DOE-STD-3009-2014 criteria. The MOI dose barely challenges the lower Moderate threshold of DOE-STD-3009-2014 evaluation guideline of 5–25 rem.

3.4.3.2.5 Summary of Safety Class SSCs, SACs, and TSR Controls

No preventive engineered feature is identified. The following administrative preventive SAC reduces the frequency of this event from Extremely Unlikely to Beyond Extremely Unlikely.

Waste Handling Program: The following features are credited.

- Once the Waste Shaft Conveyance is loaded with waste the Waste Shaft Access Door 156 shall be closed and remain closed while waste is present in the Waste Shaft. This reduces the likelihood for vehicles, equipment, and/or loads to drop down an open Waste Shaft into the shaft sump.

The above administrative preventive SAC provides a safety significant function because the MOI dose of 5.3 rem which slightly exceeds the 5 rem threshold for MOI. The use of conservative DRs and ARF*RF supports the conclusion of controls not requiring a classification of SC.

3.5 Beyond Design/Evaluation Basis Accidents

According to DOE-STD-3009-2014, BEBAs are those accidents with more severe conditions or equipment failures than are estimated for the corresponding evaluation basis accident. The BEBAs focus on NPH events that would be beyond the design basis of the WHB (e.g., an earthquake with greater than 0.1 g ground acceleration. The BDBAs are wind events (high wind [CH/RH-WHB-21-001a, CH/RH-WHB-21-002a] or tornado [CH/RH-WHB-22-001a, CH/RH-WHB-22-002a]) that result in a WHB collapse, a snow load event that results in a roof collapse (CH/RH-WHB-23-001a), a seismic event that results in a building collapse with a subsequent fire (CH/RH-WHB-25-001a), and an NPH event leading to a Waste Shaft Tower collapse (CH/RH-WHB-24-001a). Failure of multiple noncompliant containers (e.g., hazard analysis event CH/RH-UG-02-001a) and exothermic reactions are also analyzed as BEBA.

3.5.1 Beyond Evaluation Basis Accidents – NPH Event

The bounding NPH event is a seismic event that results in a building collapse with a subsequent fire (CH/RH-WHB-25-001a). This event considers the failure of the WHB when containing maximum inventory. The subsequent small combustible fire exposes two facility pallets of CH Waste (bounding CH waste configuration is direct loaded 55-gallon drums). It also considers the failure of the Waste Hoist involving a facility pallet of CH Waste containers. While DOE-STD-3009-2014 states that “Realistic analysis may be used to understand the impact of the accident,” this BEBA assumes bounding values for MAR, ARFxRFs and DRs for determining source term in accordance with DOE STD-5506. However, mean MOI TED for radiological dose calculations (WIPP-002) is used in analyzing this event (i.e., 0.95 rem/PE-Ci for 3-minute release duration from collapse of the WHB and mean 2-hour release duration of 0.38 rem/PE-Ci from the Waste Shaft (WIPP-002 and WIPP-019)).

The unmitigated TED incurred by the MOI is 1.8 rem using mean TED (WIPP-019). There are no SSCs that would survive this postulated event to mitigate the consequences. The emergency management program in co-ordination with outside stakeholders would help to mitigate the MOI doses.

3.5.2 Beyond Evaluation Basis Accidents – Exothermic Reaction Analysis

This BEBA event assumes that the WIPP WAC control is violated and a container undergoes an exothermic reaction and a follow-on fire occurs with adjacent drums experiencing seal failure in the Underground, WHB (bounding event), or during transport. The WHB scenario gave the bounding consequences due to differences in MOI χ/Q calculations. WIPP-058 determined that a maximum of five drums are involved in the follow-on fire while staged in the WHB or during transport, or 59 drums if emplaced in an open or closed panel in the UG. The WIPP WAC and National TRU Program (NTP) has been improved to prevent the future shipments of waste streams that can cause this exothermic reaction (e.g., nitrate bearing waste as described in Chapter 18.0, “WIPP Waste Acceptance Criteria Compliance Program”). While DOE-STD-3009-2014 states that “Realistic analysis may be used to understand the impact of the accident,” this BEBA assumes bounding values for MAR, and ARFxRFs for determining source term in accordance with DOE STD-5506. No credit is taken for the isolation bulkheads for closed panels in calculating source term. However, to provide a more realistic analysis, a 0.5 LPF for deposition within the WHB prior to filtration (WIPP-018) and mean MOI TED for radiological dose calculations (WIPP-002) are used in analyzing this event. The mean 1-hour MOI TED of 0.52 rem/PE-Ci is used for the dose calculation from the WHB and the mean 2-hour MOI TED of 0.38 rem/PE-C is used for the UG (WIPP-002).

The unmitigated TED incurred by the MOI is 4.3E+0 rem for a release from the WHB (WIPP-018). The SS WHB CVS would be available to provide mitigation to the MOI for this event and would reduce the dose to 43 millirem. The unmitigated TED incurred by the MOI is 3.1E+0 rem for a release from the UG (WIPP-018). The SS UVFS/IVS would be available to provide mitigation to the MOI for this event and would reduce the dose to 31 millirem. The emergency management program in co-ordination with outside agencies would also assist in mitigating the MOI doses.

3.5.3 Multiple Noncompliant Container Failures

A noncompliant container can initiate an explosion and/or fire. Two noncompliant containers carrying powder and sufficient moisture to reach flammable conditions deflagrate in the WHB. Two SWBs are selected as the noncompliant container with a MAR of 560 PE-Ci (WIPP WAC limit) and 160.0 PE-Ci (95th percentile value). The bounding ARF*RF of 2.0E-3 is used for the over-pressure event in a container of powder because no median value is provided. This value is for container failing at < 25 psi. A bounding ARF*RF of 6.0E-5 is used for subsequent thermal stress because no median value is provided. An LPF of 1 is assumed for the unmitigated analysis. The resultant ST for this postulated event is calculated as follows:

$$ST = ST_{overpressure} + ST_{thermal\ stress} = 1.44E{+}0\ PE\text{-}Ci + 4.3E\text{-}2\ PE\text{-}Ci = 1.48E{+}0\ PE\text{-}Ci$$

$$ST_{overpressure} = (560\ PE\text{-}Ci + 160.0\ PE\text{-}Ci) \times 1 \times 2.0E\text{-}3 \times 1 = 1.44E{+}0\ PE\text{-}Ci$$

$$ST_{thermal\ stress} = (560\ PE\text{-}Ci + 160.0\ PE\text{-}Ci) \times 1 \times 6.0E\text{-}5 \times 1 = 4.3E\text{-}2\ PE\text{-}Ci$$

The mean MOI unit-TED for 1-hour release duration is 0.52 rem/PE-Ci from WHB (WIPP-002). The unmitigated TED incurred by the MOI is 7.7E-1 rem (1.48E+0 PE-Ci × 0.52 rem/PE-Ci). The WHB ventilation SSC credited for other events would provide mitigation to the MOI and would reduce the dose to 8 millirem. The emergency management program in co-ordination with outside stakeholders would help to mitigate the MOI doses.

3.5.4 Underground Collapse/Catastrophic Roof Fall

WIPP is situated in a Uniform Building Code Seismic Zone 1 region. The 2008 or the 2014 U.S. Geological Survey national hazard map shows that at the WIPP site (Uniform Building Code Seismic Zone 1), a 0.1 g PGA would have approximately a 2500-year return interval. The higher seismic design categories (SDCs) of SDC-4 and SDC-5 have a return frequency of 4.0E-5/year and 1.0E-5/year, respectively (DOE-STD-1020-2012 and ANSI/ANS-2.26, *Categorization of Nuclear Facility Structures, Systems, and Components for Seismic Design*). The collapse of the UG would take an earthquake of greater than 0.2 g (Pratt 1978) which has a return frequency of 2.3E-6/year (SAND 78). The collapse of the UG is not considered because it will survive a BEBA of SDC-4 and SDC-5.

The BEBA evaluation shows that there are no cliff edge effects. The highest radiological consequences to the MOI is 4.3 rem therefore there is no need for cost-benefit evaluation of improvements, modifications, or enhanced emergency management response capabilities.

3.6 Planned Design and Operational Safety Improvements

Significant design and operational safety improvements were implemented at WIPP in response to the UG fire and independent radiological release events that occurred in February 2014. This included design changes to the UVS to enhance HEPA filtration system capacity by the addition of an IVS.

A longer-term permanent ventilation system that will significantly improve the UVS HEPA filtration capacity to support normal UG operations using additional diesel-fueled vehicles/equipment concurrently is being considered. The two options currently being considered for the permanent ventilation system are:

- New Exhaust Shaft for mining operations and use existing Exhaust Shaft with additional filtration capacity for full waste disposal operations, and
- Existing Exhaust Shaft with filtered ventilation sufficient for full mining and Waste Handling operations.

The following additional operational safety improvements are planned:

- Upgrading of differential pressure instrument loops reporting to the CMR to address vulnerabilities identified during the backfit analysis.
- Installation of CAMs at the entrance and exit of Panels 6 and 7 (total of four CAMs) that communicate with the CMR.
- Installation of protective fire barrier (e.g., fire retardant insulation, curbing) for WHB steel support columns located near CH/RH Bay roll-up door, as required.
- Evaluate the WHB fire suppression system vulnerability identified in DSA Table 4.4.3-2 related to overall system demand during fire hydrant testing, and implement system or operational improvements as necessary.
- Upgrading the WIPP fire water supply and distribution system (e.g., supply tank, fire pumps, pump house, fire water supply lines) to meet DOE Order 420.1C, *Facility Safety*, DOE-STD-1066-2012, *Fire Protection*, and current national fire codes.

These options are subject to budget and DOE approval of the project management baseline.

Operational changes may be required in response to the February 2014 event and additional waste stream issues that may be identified in the DOE complex. These issues may include such items as the nitrate chemistry which led to the February 2014 radiological release event, high wattage waste, and POC and CCO confinement (containing combustible waste materials, excluding radiological control materials and packaging materials normally used to load these containers). Analysis of issues is ongoing within the DOE complex and resolutions are not well defined as of the issue date of this DSA. Therefore, WIPP has prohibited receipt of these suspect waste streams and POCs and CCOs through the WIPP WAC until resolutions are determined and the applicable analysis incorporated into this DSA and the WIPP WAC. Waste already received at WIPP with regard to suspect waste streams (e.g., nitrates, high wattage) was already emplaced in the UG before the February 2014 event. SS isolation bulkheads were installed to isolate these containers from normal operations in the UG. With regard to the POCs, there are currently 97 POCs stored in the WHB on site. These POCs are from an SRS waste stream that have not loaded general combustible waste into the POC. Waste from this waste stream is comprised of iron base metal alloys, other metal/alloys, and other inorganic materials. There is no combustible waste listed as components of these Waste Containers. This excludes radiological control materials and packaging materials normally used to load POCs. This waste stream was packaged to have similar values for the radionuclides and material parameters. The maximum loading of a POC currently in the WHB is 12.1 PE-Ci and the average loading is 7.9 PE-Ci. These PE-Ci values are below the values evaluated in the hazard and accident analysis for the POCs in Tables 3.4-1 and 3.4-2.

3.7 References

10 CFR 830, "Nuclear Safety Management," Subpart B, "Safety Basis Requirements," *Code of Federal Regulations*. U.S. Government Printing Office, Washington, DC.

10 CFR 830, "Nuclear Safety Management," Subpart B, "Safety Basis Requirements," Section 830.205, "Technical Safety Requirements," *Code of Federal Regulations*. U.S. Government Printing Office, Washington, DC.

10 CFR 835, "Occupational Radiation Protection," *Code of Federal Regulations*. U.S. Government Printing Office, Washington, DC.

10 CFR 851, "Worker Safety and Health Program," *Code of Federal Regulations*. U.S. Government Printing Office, Washington, DC.

29 CFR 1910, "Occupational Safety and Health Standards," Section 1910.1450, "Occupational Exposure to Hazardous Chemicals in Laboratories," *Code of Federal Regulations*. U.S. Government Printing Office, Washington, DC.

30 CFR 57, "Safety and Health Standards – Underground Metal and Nonmetal Mines," Subpart R, "Personnel Hoisting," *Code of Federal Regulations*. U.S. Government Printing Office, Washington, DC.

42 USC 6901 et seq., *Resource Conservation and Recovery Act of 1976.*

Advanced Technologies and Laboratories International, Inc. *Protective Action Criteria (PAC): Chemicals with AEGLs, ERPGs, & TEELs*, Rev 27, February 2012. Available at: http://www.atlintl.com/DOE/teels/teel.html.

ANSI/ANS-2.26-2004, (Reaffirmed 2010), *Categorization of Nuclear Facility Structures, Systems, and Components for Seismic Design*, American Nuclear Society.

CCPS 1992, *Guidelines for Hazard Evaluation Procedures*, 2nd Edition, Center for Chemical Process Safety, American Institute of Chemical Engineers, New York, NY.

CH-TRAMPAC, *Contact-handled Transuranic Waste Authorized Methods for Payload Control*, Revision 4, March 2013, U.S. Department of Energy, Carlsbad Field Office, Carlsbad, NM.

DOE/CBFO-15-3554, September 2015, *Basis for Approval WIPP Dispersion Modeling Protocol*, Letter from CBFO to NWP.

DOE Guide 151.1-2, *Technical Planning Basis*, U.S. Department of Energy, Washington, DC.

DOE Guide 421.1-2, 2001, *Implementation Guide for Use in Developing Documented Safety Analyses to Meet Subpart B of 10 CFR 830*, October 24, 2001, U.S. Department of Energy, Washington, DC.

DOE Guide 423.1-1B, 2015, *Implementation Guide for Use in Developing Technical Safety Requirements*, March 18, 2015, U.S. Department of Energy, Washington, DC.

DOE-HDBK-3010-94, Change 1, 2000, *Airborne Release Fractions/Rates and Respirable Fractions for Nonreactor Nuclear Facilities*, March 2000, U.S. Department of Energy, Washington, DC.

DOE Order 420.1C, 2012, *Facility Safety*, December 13, 2012, U.S. Department of Energy, Washington, DC.

DOE Order 433.1B, Maintenance Management Program for DOE Nuclear Facilities, April 21, 2010, U.S. Department of Energy, Washington, DC.

DOE Order 458.1, 2011, *Radiation Protection of the Public and the Environment*, February 11, 2011, U.S. Department of Energy, Washington, DC.

DOE-STD-1020-2002, *Natural Phenomena Hazards Design and Evaluation Criteria for Department of Energy Facilities*. U.S. Department of Energy, Washington, DC.

DOE-STD-1020-2012, 2012, *Natural Phenomena Hazards Analysis and Design Criteria for Department of Energy Facilities*, October 3, 2012, U.S. Department of Energy, Washington, DC.

DOE-STD-1027-92, Change 1, 1997, *Hazard Categorization and Accident Analysis Techniques for Compliance with DOE Order 5480.23, Nuclear Safety Analysis Reports*, September 1997, U.S. Department of Energy, Washington, DC.

DOE-STD-1066-2012, *Fire Protection*, December 2012, U.S. Department of Energy, Washington, DC.

DOE-STD-1186-2004, 2004, *Specific Administrative Controls*, August 2004, U.S. Department of Energy, Washington, DC.

DOE-STD-3007-2007, *Guidelines for Preparing Criticality Safety Evaluations at Department of Energy Non-Reactor Nuclear Facilities*, February 2007, U.S. Department of Energy, Washington, DC.

DOE-STD-3009-2014, *Preparation of Nonreactor Nuclear Facility Documented Safety Analyses*, November 2014, U.S. Department of Energy, Washington, DC.

DOE-STD-3014-96, 2006, *Accident Analysis for Aircraft Crash into Hazardous Facilities*, Reaffirmed May 2006, U.S. Department of Energy, Washington, DC.

DOE-STD-5506-2007, 2007, *Preparation of Safety Basis Documents for Transuranic (TRU) Waste Facilities*, April 2007, U.S. Department of Energy, Washington, DC.

DOE/WIPP 02-3122, *Transuranic Waste Acceptance Criteria for the Waste Isolation Pilot Plant* (WIPP WAC) (Revision 7.4), U.S. Department of Energy, Carlsbad Field Office, Carlsbad, NM.

DOE/WIPP 07-3733, *Waste Isolation Pilot Plant Technical Safety Requirements* (Revision 5), U.S. Department of Energy, Carlsbad Field Office, Carlsbad, NM.

DOE/WIPP-08-3378, *Waste Isolation Pilot Plant Emergency Planning Hazards Assessment (EPHA)*, Current Revision, Nuclear Waste Partnership LLC, Carlsbad, NM.

DOE/WIPP 12-3492-2, *Semi-Annual VOC, Hydrogen, and Methane Data Summary Report for Reporting Period July 1, 2012 through December 31, 2012*, April 2013, U.S. Department of Energy, Carlsbad Field Office, Carlsbad, NM.

EPA (U.S. Environmental Protection Agency), Letter and enclosed Conditions of Approval from Carl E. Edlund (Director, Multimedia Planning and Permitting Division, EPA) to Edward Ziemianski, Acting

Manager, Carlsbad Field Office, DOE, dated January 5, 2011, granting approval for WIPP to dispose of TRU and TRU-mixed wastes containing PCBs.

ETO-B-183, *WHB CH Airborne Contamination Clearance Rates*, Nuclear Waste Partnership LLC, Carlsbad, NM.

Hayes, *February 14th Contamination Release Consequence Assessment*, Revision 2, June 2015, Nuclear Waste Partnership LLC, Carlsbad, NM.

Health, Safety, and Security (HSS) Safety Bulletin 2011-02. *Accident Analysis Parameter Update*, May 2011, U.S. Department of Energy, Office of Health, Safety, and Security, Washington DC.

HWFP, *Waste Isolation Pilot Plant Hazardous Waste Facility Permit* NM4890139088-TSDF (current revision), New Mexico Environment Department, Santa Fe, NM.

National Fire Protection Association (NFPA) 122, *Standard for Fire Prevention and Control in Metal/Nonmetal Mining and Metal Mineral Processing Facilities*, 2015 Edition, National Fire Protection Association, Quincy, MA.

NFPA 704, *Standard System for the Identification of the Hazards of Materials for Emergency Response*, National Fire Protection Association, Quincy, MA.

NFPA 220, *Standard on Types of Building Construction*, National Fire Protection Association, Quincy, MA.

NSRD-2015-TD01, *Technical Report for Calculations of Atmospheric Dispersion at Onsite Locations for Department of Energy Nuclear Facilities*, April 2015, U.S. Department of Energy, Office of Health, Safety, and Security, Washington DC.

PLG-1167, Analysis of Roof Falls and Methane Gas Explosions in Closed Rooms and Panels, August 1997, Andrew A. Dykes, John B. Case, R. Kenneth Deremer.

Pratt, H.R., W.A. Hulstrulid, and D.E. Stephenson, 1978. *Earthquake Damage to Underground Facilities*, DP-1513, November 1978, Savannah River Laboratory, Aiken, SC.

RH-TRAMPAC, *Remote-handled Transuranic Waste Authorized Methods for Payload Control*, Revision 1, April 2011, U.S. Department of Energy, Carlsbad Field Office, Carlsbad, NM.

RSICC 2006, *MACCS2 Version 1.13.1 Release Notes*, Radiation Safety Information Computational Center, Oak Ridge, TN.

SAND 78-1596. *Geological Characterization Report, Waste Isolation Pilot Plant Site, Southeastern New Mexico*, December 1978, Sandia National Laboratories, Albuquerque, NM.

TRUPACT-III TRAMPAC, *Transuranic Package Transporter Model III Authorized Methods for Payload Control* Revision 2, May 2010, Washington TRU Solutions LLC, Carlsbad, NM.

WIPP-001, *WIPP DSA Fire Event Accident Analysis Calculations*, Revision 9, Nuclear Waste Partnership LLC, Carlsbad, NM.

WIPP-002, *Documented Safety Analysis (DSA) Unit Consequence Analysis*, Revision 3, Nuclear Waste Partnership LLC, Carlsbad, NM.

WIPP-007, *Hazard Identification Summary Report for WIPP and Carlsbad, NM Operations*, Revision 7, Washington TRU Solutions LLC, Carlsbad, NM.

WIPP-008, *Estimate of Aircraft Crash Frequency at the Waste Isolation Pilot Plant*, Revision 3, Washington TRU Solutions LLC, Carlsbad, NM.

WIPP-016, *Nuclear Criticality Safety Evaluation for Contact-Handled Transuranic Waste at the Waste Isolation Pilot Plant*, Revision 5, Nuclear Waste Partnership LLC, Carlsbad, NM.

WIPP-017, *Waste Isolation Pilot Plant (WIPP) Documented Safety Analysis (DSA) Loss of Confinement (LOC) Event Hazard Analysis (HA) and Accident Analysis (AA) Calculations*, Revision 8, Nuclear Waste Partnership LLC, Carlsbad, NM.

WIPP-018, *Waste Isolation Pilot Plant (WIPP) Documented Safety Analysis (DSA) Explosion Event Hazard Analysis (HA) and Accident Analysis (AA) Calculations*, Revision 8, Nuclear Waste Partnership LLC, Carlsbad, NM.

WIPP-019, *WIPP DSA External Event and Natural Hazard Phenomena (NHP) Event Hazard Analysis (HA) and Accident Analysis (AA) Calculations*, Revision 7, Washington TRU Solutions LLC, Carlsbad, NM.

WIPP-020, *Nuclear Criticality Safety Evaluation for Remote-Handled Waste at the Waste Isolation Pilot Plan*, Revision 2, Nuclear Waste Partnership LLC, Carlsbad, NM.

WIPP-021, *Hazardous Analysis for the Waste Isolation Pilot Plant Transuranic Waste Handling Safety Basis*, Revision 6, Nuclear Waste Partnership LLC, Carlsbad, NM.

WIPP-023, *Fire Hazards Analysis for the Waste Isolation Pilot Plant*, Revision 7, Nuclear Waste Partnership LLC, Carlsbad, NM.

WIPP-045, *GENII Version 2 Deposition Velocity of Unmitigated/Unfiltered Release*, Revision 0, Washington TRU Solutions LLC, Carlsbad, NM.

WIPP-051, Sc*oping Calculations for MIN02-V.001 Waste for Closure of Panels 6 and 7*, Revision 3, Washington TRU Solutions LLC, Carlsbad, NM.

WIPP-054, *WIPP Dispersion Modeling Protocol*, Revision 0, Nuclear Waste Partnership LLC, Carlsbad, NM, April 30, 2015.

WIPP-057, *Statistical Parameters for Bounding MAR Limits at the WIPP*, Revision 3, Nuclear Waste Partnership LLC, Carlsbad, NM.

WIPP-058, Revision 2, *DSA Supporting Calculations, Fuel Spill, HEPA Filter Plugging, and Fire Compartment Over-Pressurization*, Nuclear Waste Partnership LLC, Carlsbad, NM, October 2015.

WP 09-CN3031, Revision 2, *Hydrogen generation by fork-truck rechargers in CH Bay of WHB*, Washington TRU Solutions LLC, Carlsbad, NM.

WP 12-RP.01, Revision 7, *Waste Isolation Pilot Plant Emergency Planning Hazards Survey*, Nuclear Waste Partnership LLC, Carlsbad, NM.

Table of Contents

4.0 SAFETY STRUCTURES, SYSTEMS, AND COMPONENTS 4-1
4.1 Introduction 4-1
4.2 Requirements 4-1
4.3 Safety Class Structures, Systems, and Components 4-2
4.4 Safety Significant Structures, Systems, and Components 4-2
4.4.1 Waste Handling Building Structure 4-10
4.4.1.1 Safety Function 4-11
4.4.1.2 System Description 4-11
4.4.1.3 Functional Requirements 4-12
4.4.1.4 System Evaluation 4-12
4.4.1.5 Technical Safety Requirements (TSRs) 4-16
4.4.2 Underground Vehicle/Equipment Fire Suppression Systems 4-17
4.4.2.1 Safety Function 4-17
4.4.2.2 System Description 4-17
4.4.2.3 Functional Requirements 4-20
4.4.2.4 System Evaluation 4-20
4.4.2.5 Technical Safety Requirements (TSRs) 4-24
4.4.3 Waste Handling Building Fire Suppression System 4-24
4.4.3.1 Safety Function 4-25
4.4.3.2 System Description 4-25
4.4.3.3 Functional Requirements 4-27
4.4.3.4 System Evaluation 4-27
4.4.3.5 Technical Safety Requirements (TSRs) 4-30
4.4.4 Facility Pallet 4-31
4.4.4.1 Safety Function 4-31
4.4.4.2 System Description 4-31
4.4.4.3 Functional Requirement 4-32
4.4.4.4 System Evaluation 4-32
4.4.4.5 Technical Safety Requirements (TSRs) 4-33
4.4.5 Underground Ventilation Filtration System/Interim Ventilation System 4-33
4.4.5.1 Safety Function 4-33
4.4.5.2 System Description 4-34
4.4.5.3 Functional Requirements 4-36
4.4.5.4 System Evaluation 4-36
4.4.5.5 Technical Safety Requirements (TSRs) 4-42
4.4.6 Contact-Handled Waste Handling Confinement Ventilation System 4-42
4.4.6.1 Safety Function 4-42
4.4.6.2 System Description 4-42
4.4.6.3 Functional Requirements 4-44
4.4.6.4 System Evaluation 4-44
4.4.6.5 Technical Safety Requirements (TSRs) 4-48
4.4.7 Waste Hoist Brakes 4-48

4.4.7.1 Safety Function 4-48
4.4.7.2 System Description 4-48
4.4.7.3 Functional Requirements 4-50
4.4.7.4 System Evaluation 4-50
4.4.7.5 Technical Safety Requirements (TSRs) 4-52
4.4.8 Underground Fuel and Oil Storage Areas 4-53
4.4.8.1 Safety Function 4-53
4.4.8.2 System Description 4-53
4.4.8.3 Functional Requirements 4-53
4.4.8.4 System Evaluation 4-54
4.4.8.5 Technical Safety Requirements (TSRs) 4-54
4.4.9 Waste Hoist Support Structure 4-54
4.4.9.1 Safety Function 4-54
4.4.9.2 System Description 4-55
4.4.9.3 Functional Requirements 4-55
4.4.9.4 System Evaluation 4-55
4.4.9.5 Technical Safety Requirements (TSRs) 4-57
4.4.10 Facility Casks 4-57
4.4.10.1 Safety Function 4-57
4.4.10.2 System Description 4-57
4.4.10.3 Functional Requirements 4-59
4.4.10.4 System Evaluation 4-59
4.4.10.5 Technical Safety Requirements (TSRs) 4-60
4.4.11 Type B Shipping Package 4-61
4.4.11.1 Safety Function 4-61
4.4.11.2 System Description 4-61
4.4.11.3 Functional Requirements 4-62
4.4.11.4 System Evaluation 4-62
4.4.11.5 Technical Safety Requirements (TSRs) 4-63
4.4.12 Facility Cask Loading Room, Cask Unloading Room, and Transfer Cell Shielding 4-63
4.4.12.1 Safety Function 4-63
4.4.12.2 System Description 4-64
4.4.12.3 Functional Requirements 4-64
4.4.12.4 System Evaluation 4-64
4.4.12.5 Technical Safety Requirements (TSRs) 4-65
4.4.13 Panel 6 and Panel 7, Room 7 Bulkheads 4-65
4.4.13.1 Safety Function 4-65
4.4.13.2 System Description 4-66
4.4.13.3 Functional Requirements 4-66
4.4.13.4 System Evaluation 4-66
4.4.13.5 Technical Safety Requirement (TSRs) 4-67
4.4.14 Vehicle Barriers 4-67
4.4.14.1 Safety Function 4-68

4.4.14.2 System Description 4-68
4.4.14.3 Functional Requirements 4-69
4.4.14.4 System Evaluation 4-69
4.4.14.5 Controls (Technical Safety Requirement) 4-70
4.5 Specific Administrative Controls 4-71
4.5.1 Pre-operational Checks of Vehicles/Equipment in Proximity to Contact-Handled Waste 4-77
4.5.1.1 Safety Function 4-78
4.5.1.2 Specific Administrative Control Description 4-78
4.5.1.3 Functional Requirements 4-78
4.5.1.4 Specific Administrative Control Evaluation 4-79
4.5.1.5 Technical Safety Requirements (TSRs) 4-80
4.5.2 Limit of Two Liquid-fueled Vehicles/Equipment within 25 feet of the CH Waste Face 4-80
4.5.2.1 Safety Function 4-80
4.5.2.2 Specific Administrative Control Description 4-80
4.5.2.3 Functional Requirements 4-81
4.5.2.4 Specific Administrative Control Evaluation 4-81
4.5.2.5 Technical Safety Requirements (TSRs) 4-82
4.5.3 Attendance of Liquid-fueled Vehicles/Equipment in the Underground 4-82
4.5.3.1 Safety Function 4-83
4.5.3.2 Specific Administrative Control Description 4-83
4.5.3.3 Functional Requirements 4-83
4.5.3.4 Specific Administrative Control Evaluation 4-84
4.5.3.5 Technical Safety Requirements (TSRs) 4-84
4.5.4 Aboveground Liquid-fueled Vehicles/Equipment Prohibition 4-85
4.5.4.1 Safety Function 4-85
4.5.4.2 Specific Administrative Control Description 4-85
4.5.4.3 Functional Requirements 4-86
4.5.4.4 Specific Administrative Control Evaluation 4-87
4.5.4.5 Technical Safety Requirements (TSRs) 4-88
4.5.5 Vehicle Exclusion Zone 4-88
4.5.5.1 Safety Function 4-88
4.5.5.2 Specific Administrative Control Description 4-89
4.5.5.3 Functional Requirements 4-89
4.5.5.4 Specific Administrative Control Evaluation 4-90
4.5.5.5 Technical Safety Requirements (TSRs) 4-91
4.5.6 Underground Lube Truck Operations 4-91
4.5.6.1 Safety Function 4-91
4.5.6.2 Specific Administrative Control Description 4-91
4.5.6.3 Functional Requirements 4-93
4.5.6.4 Specific Administrative Control Evaluation 4-93
4.5.6.5 Technical Safety Requirements (TSRs) 4-94
4.5.7 Waste Conveyance Operations 4-95

4.5.7.1 Safety Function 4-95
4.5.7.2 Specific Administrative Control Description 4-95
4.5.7.3 Functional Requirements 4-97
4.5.7.4 Specific Administrative Control Evaluation 4-97
4.5.7.5 Technical Safety Requirements (TSRs) 4-98
4.5.8 WIPP Waste Acceptance Criteria 4-99
4.5.8.1 Safety Function 4-99
4.5.8.2 Specific Administrative Control Description 4-99
4.5.8.3 Functional Requirements 4-100
4.5.8.4 Specific Administrative Control Evaluation 4-100
4.5.8.5 Technical Safety Requirements (TSRs) 4-102
4.5.9 Transuranic Waste Outside the Waste Handling Building 4-102
4.5.9.1 Safety Function 4-103
4.5.9.2 Specific Administrative Control Description 4-103
4.5.9.3 Functional Requirements 4-103
4.5.9.4 Specific Administrative Control Evaluation 4-104
4.5.9.5 Technical Safety Requirements (TSRs) 4-105
4.5.10 Fuel Tanker Prohibition 4-105
4.5.10.1 Safety Function 4-105
4.5.10.2 Specific Administrative Control Description 4-105
4.5.10.3 Functional Requirements 4-106
4.5.10.4 Specific Administrative Control Evaluation 4-106
4.5.10.5 Technical Safety Requirements (TSRs) 4-106
4.5.11 Contact-Handled Bay Alternative Barrier Provision 4-106
4.5.11.1 Safety Function 4-107
4.5.11.2 Specific Administrative Control Description 4-107
4.5.11.3 Functional Requirements 4-108
4.5.11.4 Specific Administrative Control Evaluation 4-108
4.5.11.5 Technical Safety Requirements (TSRs) 4-109
4.5.12 Real-time Monitoring at Panel 6 and Panel 7 Isolation Bulkheads 4-109
4.5.12.1 Safety Function 4-109
4.5.12.2 Administrative Control Description 4-109
4.5.12.3 Functional Requirements 4-111
4.5.12.4 Administrative Control Evaluation 4-112
4.5.12.5 Technical Safety Requirements (TSRs) 4-113
4.5.13 Attendance of Vehicles/Equipment in the RH Bay 4-114
4.5.13.1 Safety Function 4-114
4.5.13.2 Specific Administrative Control Description 4-114
4.5.13.3 Functional Requirements 4-115
4.5.13.4 Specific Administrative Control Evaluation 4-115
4.5.13.5 Technical Safety Requirements (TSRs) 4-116
4.6 References 4-116

List of Tables

Table 4.4-1. Summary of Safety Significant Controls 4-2
Table 4.4.1-1. Functional Requirements for the Waste Handling Building Facility Structure Design 4-12
Table 4.4.1-2. Performance Criteria and Performance Evaluation for the Waste Handling Building Facility Structure Design 4-13
Table 4.4.2-1. Functional Requirements for Underground Vehicle/Equipment Fire Suppression System 4-20
Table 4.4.2-2. Performance Criteria and Performance Evaluation for the Underground Vehicle/Equipment Fire Suppression System 4-20
Table 4.4.3-1. Functional Requirements for Waste Handling Building Fire Suppression System 4-27
Table 4.4.3-2. Performance Criteria and Performance Evaluation for Waste Handling Building Fire Suppression System 4-28
Table 4.4.4-1. Functional Requirements for Facility Pallets 4-32
Table 4.4.4-2. Performance Criteria and Performance Evaluation for the Facility Pallets 4-32
Table 4.4.5-1. Functional Requirements for Underground Ventilation Filtration System and Interim Ventilation System 4-36
Table 4.4.5-2. Performance Criteria and Performance Evaluation for the Underground Ventilation System and Interim Ventilation System 4-38
Table 4.4.6-1. Functional Requirements for the Contact-Handled Waste Handling Confinement Ventilation System 4-44
Table 4.4.6-2. Performance Criteria and Performance Evaluation for the Contact-Handled Waste Handling Confinement Ventilation System 4-45
Table 4.4.7-1. Functional Requirements for Waste Hoist Brakes 4-50
Table 4.4.7-2. Performance Criteria and Performance Evaluation for the Waste Hoist Brakes 4-50
Table 4.4.8-1. Functional Requirements for Underground Fuel and Oil Storage Areas 4-53
Table 4.4.8-2. Performance Criteria and Performance Evaluation for Underground Fuel and Oil Storage Areas 4-54
Table 4.4.9-1. Functional Requirements for the Waste Hoist Support Structure 4-55
Table 4.4.9-2. Performance Criteria and Performance Evaluation for the Waste Hoist Support Structure 4-56
Table 4.4.10-1. Functional Requirements for the Remote-Handled Facility Cask and Light Weight Facility Cask 4-59
Table 4.4.10-2. Performance Criteria and Performance Evaluation for the Remote-Handled Facility Cask and Light Weight Facility Cask 4-59
Table 4.4.11-1. Functional Requirements for Type B Shipping Package 4-62
Table 4.4.11-2. Performance Criteria and Performance Evaluation for Type B Shipping Package 4-62
Table 4.4.12-1. Functional Requirements for Facility Cask Loading Room, Cask Unloading Room, and Transfer Cell Shielding 4-64
Table 4.4.12-2. Performance Criteria and Performance Evaluation for Facility Cask Loading Room, Cask Unloading Room, and Transfer Cell Shielding 4-65
Table 4.4.13-1. Functional Requirements for Panel 6, and Panel 7, Room 7 Bulkheads 4-66

Table 4.4.13-2. Performance Criteria and Performance Evaluation for Panel 6, and Panel 7, Room 7 Bulkheads 4-67
Table 4.4.14-1. Functional Requirements for Vehicle Barriers 4-69
Table 4.4.14-2. Performance Criteria and Performance Evaluation for Vehicles Barriers 4-69
Table 4.5-1. Summary of Specific Administrative Controls 4-71
Table 4.5.1-1. Justification for Specific Administrative Control versus Structures, Systems, and Components for Pre-operational Checks of Vehicles/Equipment in Proximity of Contact-Handled Waste 4-78
Table 4.5.1-2. Functional Requirements for Pre-operational Checks of Vehicles/Equipment in Proximity to Contact-Handled Waste 4-78
Table 4.5.1-3. Performance Criteria and Performance Evaluation for Pre-operational Checks of Vehicles/Equipment in Proximity of Contact-Handled Waste 4-79
Table 4.5.2-1. Justification for Specific Administrative Control versus Structures, Systems, and Components for Limit of Two Liquid-fueled Vehicles/Equipment with within 25 feet of the CH Waste Face 4-81
Table 4.5.2-2. Functional Requirement for Limit of Two Liquid-fueled Vehicles/Equipment with within 25 feet of the CH Waste Face 4-81
Table 4.5.2-3. Performance Criteria and Performance Evaluation for Limit of Two Liquid-fueled Vehicles/Equipment with within 25 feet of the CH Waste Face 4-82
Table 4.5.3-1. Justification for Specific Administrative Control versus Structures, Systems, and Components for Attendance of Liquid-fueled Vehicles/Equipment in the Underground 4-83
Table 4.5.3-2. Functional Requirement for Attendance of Liquid-fueled Vehicles/Equipment in the Underground 4-84
Table 4.5.3-3. Performance Criteria and Performance Evaluation for Attendance of Liquid-fueled Vehicles/Equipment in the Underground 4-84
Table 4.5.4-1. Justification of Specific Administrative Control versus Structures, Systems, and Components for Aboveground Liquid-fueled Vehicles/Equipment Prohibition Control 4-86
Table 4.5.4-2. Functional Requirements for the Aboveground Liquid-fueled Vehicles/Equipment Prohibition Control 4-87
Table 4.5.4-3. Performance Criteria and Performance Evaluation for the Aboveground Liquid-fueled Vehicle Prohibition Control 4-87
Table 4.5.5-1. Justification of Specific Administrative Control versus Structures, Systems, and Components for Vehicle Exclusion Zone 4-89
Table 4.5.5-2. Functional Requirement for the Vehicle Exclusion Zone 4-90
Table 4.5.5-3. Performance Criteria and Performance Evaluation for the Vehicle Exclusion Zone 4-90
Table 4.5.6-1. Justification of Specific Administrative Control versus Structures, Systems, and Components for Underground Lube Truck Operations Control 4-92
Table 4.5.6-2. Functional Requirements for the Underground Lube Truck Operations Control 4-93
Table 4.5.6-3. Performance Criteria and Performance Evaluation for the Lube Truck Operations Control 4-93
Table 4.5.7-1. Justification of Specific Administrative Control versus Structures, Systems, and Components for Waste Conveyance Operations Control 4-96

Table 4.5.7-2. Functional Requirements for the Waste Conveyance Operations Control 4-97
Table 4.5.7-3. Performance Criteria and Performance Evaluation for the Waste Conveyance Operations Control 4-97
Table 4.5.8-1. Functional Requirements for WIPP Waste Acceptance Criteria 4-100
Table 4.5.8-2. Performance Criteria and Performance Evaluation for the WIPP Waste Acceptance Criteria 4-101
Table 4.5.9-1. Justification of Specific Administrative Control versus Structures, Systems, and Components for Transuranic Waste Outside the Waste Handling Building 4-103
Table 4.5.9-2. Functional Requirements for Transuranic Waste Outside the Waste Handling Building Control 4-104
Table 4.5.9-3. Performance Criteria and Performance Evaluation for Transuranic Waste Outside Waste Handling Building Control 4-104
Table 4.5.10-1. Justification of Specific Administrative Control versus Structures, Systems, and Components for Fuel Tanker Prohibition Control 4-105
Table 4.5.10-2. Functional Requirements for the Fuel Tanker Prohibition Control 4-106
Table 4.5.10-3. Performance Criteria and Performance Evaluation for the Fuel Tanker Prohibition Control 4-106
Table 4.5.11-1. Justification of Specific Administrative Control versus Structures, Systems, and Components for Contact-Handled Bay Alternative Barrier Provision Control 4-107
Table 4.5.11-2. Functional Requirements for the Contact-Handled Bay Alternative Barrier Provision Control 4-108
Table 4.5.11-3. Performance Criteria and Performance Evaluation for the Contact-Handled Bay Alternative Barrier Provision Control 4-108
Table 4.5.12-1. Justification for Specific Administrative Control versus Structures, Systems, and Components for Real-time Monitoring at the Panel 6 and Panel 7 Isolation Bulkheads 4-110
Table 4.5.12-2. Functional Requirements for the Real-time Monitoring at Panel 6 and Panel 7 Isolation Bulkheads Control 4-111
Table 4.5.12-3. Performance Criteria for the Real-time Monitoring at the Panel 6 and Panel 7 Isolation Bulkheads Control 4-112
Table 4.5.13-1. Functional Requirement for Attendance of Vehicles/Equipment with Liquid-combustible Capacity in the RH Bay 4-115
Table 4.5.13-2. Performance Criteria and Performance Evaluation for Attendance of Vehicles/Equipment with Liquid-combustible Capacity in the RH Bay 4-115

This page intentionally left blank

4.0 SAFETY STRUCTURES, SYSTEMS, AND COMPONENTS

4.1 INTRODUCTION

This chapter provides details on those Structures, Systems, and Components (SSCs) designated as Safety Class (SC) or Safety Significant (SS) for the Waste Isolation Pilot Plant (WIPP) Contact-Handled (CH) and Remote-Handled (RH) Waste Handling processes. The purpose of selecting SC and SS SSCs is to provide protection to the public and workers, respectively, by identifying those SSCs that serve to prevent and/or mitigate postulated events. The selections of SC and SS SSCs are based on the preventive and mitigative features identified in the hazard and accident analyses in Chapter 3.0 of this Documented Safety Analysis (DSA). Specific Administrative Controls (SACs) are also identified in this chapter. SACs are Administrative Controls (ACs) that provide preventive and/or mitigative functions for specific postulated accident scenarios that have safety importance equivalent to engineered controls classified as SC or SS if the engineered controls were available. SC SSCs are discussed in Section 4.3, SS SSCs are discussed in Section 4.4, and SACs are discussed in Section 4.5. The scope of this chapter includes the following:

- Description of the SC and SS SSCs and SACs for the WIPP facility, including the required safety functions.
- Identification of the functional requirements necessary for the safety SSCs and SACs to perform their safety functions, and the general conditions caused by postulated accidents under which the safety SSCs or SACs must operate.
- Identification of the performance criteria necessary to provide reasonable assurance that the functional requirements will be met.
- Identification of assumptions needing Technical Safety Requirement (TSR) coverage.

The balance of this chapter addresses the safety SSCs and programs specifically credited in the hazard and accident analyses. Although the *Preparation of Nonreactor Nuclear Facility Documented Safety Analysis* (DOE-STD-3009-2014) anticipates a discussion on safety support systems in Chapter 4.0, only support systems required or relied on for the safety SSCs to carry out their safety functions are required. WIPP has no credited support systems.

4.2 REQUIREMENTS

This chapter was prepared following the format, content, and graded approach guidelines for identifying safety SSCs and SACs in accordance with the following code and regulatory documents:

- 10 *Code of Federal Regulations* (CFR) 830, “Nuclear Safety Management,” Subpart B, “Safety Basis Requirements.”
- DOE-STD-3009-2014, *Preparation of Nonreactor Nuclear Facility Documented Safety Analysis*.
- DOE-STD-1186-2004, *Specific Administrative Controls*.
- DOE-STD-5506-2007, *Preparation of Safety Basis Documents for Transuranic (TRU) Waste Facilities.*
- DOE Guide 421.1-2, *Implementation Guide for Use in Developing Documented Safety Analyses to Meet Subpart B of 10 CFR 830*.

4.3 SAFETY CLASS STRUCTURES, SYSTEMS, AND COMPONENTS

SC SSCs are those SSCs whose preventive and/or mitigative functions are necessary to keep radioactive exposure to the public from exceeding or challenging the offsite evaluation guideline of 25 rem (DOE-STD-3009-2014). The guideline specifies a value of 25 rem total effective dose (TED) equivalent to a maximally exposed member of the public as the threshold for identifying SC SSCs. The Maximally Exposed Offsite Individual (MOI) unmitigated radioactive doses between 5 rem and 25 rem require consideration of SC controls per DOE-STD-3009-2014.

No SSCs were designated SC for the Transuranic (TRU) Waste Handling processes. Only one event, CH/RH-UG-01-005a1, was determined to result in unmitigated radioactive dose consequences to the MOI of 5.2 rem for the MOI. CH/RH-UG-01-005a1 consequences were conservatively calculated and no controls were assessed as requiring Safety Class designation. Unmitigated radioactive dose consequences were determined in *WIPP DSA Fire Event Accident Analysis Calculations* (WIPP-001), *Waste Isolation Pilot Plant (WIPP) Documented Safety Analysis (DSA) Loss of Confinement (LOC) Event Hazard Analysis (HA) and Accident Analysis (AA) Calculations* (WIPP-017), *Waste Isolation Pilot Plant (WIPP) Documented Safety Analysis (DSA) Explosion Event Hazard Analysis (HA) and Accident Analysis (AA) Calculations* (WIPP-018), *WIPP DSA External Event and Natural Hazard Phenomena (NHP) Event Hazard Analysis (HA) and Accident Analysis (AA) Calculations* (WIPP-019), and *Scoping Calculations for MIN01-V.001 Waste for Closure of Panels 6 and 7* (WIPP-051).

4.4 SAFETY SIGNIFICANT STRUCTURES, SYSTEMS, AND COMPONENTS

The SS SSCs are those SSCs that have a preventive or mitigative function that is a major contributor to worker safety as determined from the hazard analysis. The SS SSCs are specified in Chapter 3.0, and discussed in the following sections. For definition, the term TRU Waste used throughout this chapter refers to TRU Waste delivered to WIPP from waste generators. WIPP site-derived contaminated material, such as filters from a ventilation system, is specifically excluded from this TRU Waste definition.

Table 4.4-1 provides a summary list of SS SSCs from Chapter 3.0, the events for which the SS designation applies, Safety Functions, functional requirements, and performance criteria judged to require TSR coverage. The following subsections provide related details including a system description and performance evaluation of the applicable controls.

Table 4.4-1. Summary of Safety Significant Controls

Safety Functions	Functional Requirements	Performance Criteria
Waste Handling Building (Section 4.4.1)		
To prevent radiological material releases due to seismic induced collapse of the Waste Handling Building (WHB).	WHB does not collapse during the Design Basis Earthquake (DBE).	The WHB is designed to withstand a DBE with 0.1 g peak ground acceleration (PGA).
		The Transuranic Package Transporter (TRUPACT) Maintenance Facility (TMF) (Building 412) is designed to withstand a DBE with 0.1 g PGA.

Safety Functions	Functional Requirements	Performance Criteria
		The main lateral-force-resisting structural members of the Support Building are designed to withstand a DBE with 0.1 g PGA.
Event(s) Where WHB Seismic Design Control is Credited: CH/RH-WHB-20-002a CH/RH-WHB-24-001a CH/RH-WHB-25-001a		
To prevent radiological material releases due to high winds, tornadoes, and/or wind/tornado generated induced collapse of the WHB.	WHB does not collapse during the Design Basis Tornado (DBT) or high wind.	The WHB is designed for DBT of 183 miles per hour (mph) winds with a translational velocity of 41 mph, tangential velocity of 124 mph, a maximum rotational velocity radius of 325 feet, a pressure drop of 0.5 pounds per square inch (psi) and a pressure drop rate of 0.09 psi per second.
		The WHB is designed to withstand straight-line wind of 110 mph, at 30 feet above ground.
		The TMF (Building 412) is designed to withstand a DBT.
		The main lateral-force-resisting structural members of the Support Building are designed to withstand a DBT.
Event(s) Where WHB Tornado and High Wind Design Control is Credited: CH/RH-WHB-20-002a CH/RH-WHB-21-001a CH/RH-WHB-21-002a CH/RH-WHB-22-001a CH/RH-WHB-22-002a		
To prevent radiological material releases due to snow/ice roof loading induced collapse of the WHB.	WHB roof does not collapse following the design basis snow/ice fall.	WHB roof is designed to withstand 27 pounds per square foot (lb/ft^2) of snow/ice load.
		TMF roof is designed to withstand 27 lb/ft^2 of snow/ice load.
		The Support Building roof is designed to withstand 10 lb/ft^2 of snow/ice dead load.
Event(s) Where WHB Roof Design Control is Credited: CH/RH-WHB-23-001a		
To prevent radiological material releases due to propagating fires through the structure from externally initiated fires or through roof collapse from credible internal fire scenarios.	External fires do not penetrate WHB exterior.	Construction of external WHB walls and curbing shall ensure external fires do not propagate to areas inside the building.

Safety Functions	Functional Requirements	Performance Criteria
	The WHB shall maintain its structural integrity during credible fire scenarios.	WHB shall not collapse as a result of credible fire scenarios.
Event(s) Where WHB Noncombustible Construction is Credited: CH/RH-WHB-04-001a CH/RH-WHB-04-002a CH/RH-WHB-04-003a CH/RH-WHB-19-001a CH/RH-WHB-20-001a CH/RH-WHB-20-002a CH/RH-WHB-25-001a CH-WHB-04-001a		
To prevent radiological material releases due to loss of confinement from vehicle/equipment drop down the Waste Shaft.	Waste Shaft access via the Conveyance Loading Room (CLR) precludes direct and unrestricted vehicle/equipment access to the Waste Shaft.	The route of vehicle/equipment to the Waste Shaft shall prevent a direct, unencumbered path to the Waste Shaft.
Event(s) Where WHB Waste Shaft Access Configuration is Credited: CH/RH-UG-01-005a1 CH/RH-UG-10-005a		
Underground Vehicle/Equipment Fire Suppression Systems (Section 4.4.2)		
To automatically detect and suppress developing stage fires associated with engine compartment and/or fuel and hydraulic line leaks, thereby reducing the likelihood of pool fires involving CH Waste.	The Fire Suppression System (FSS) shall survive a low speed collision.	The FSS components shall be located in a position to preclude a direct impact vehicle collision.
	The FSS shall automatically detect developing stage fires associated with the engine compartment and/or fuel and hydraulic line leaks.	Automatic detection shall be designed and installed in accordance with National fire Protection Association (NFPA) 17, Chapter 9, “Requirements for pre-engineered systems.”
	Upon detection of a developing fire, the FSS shall automatically discharge a fire suppressant into the engine compartment and designated heat source locations to extinguish the fire.	Automatic actuation of the fire suppressant shall be designed and installed in accordance with NFPA 17, Chapter 9, “Requirements for pre-engineered systems.”
	Upon actuation of the extinguishing systems, the engine shall shut down automatically.	Automatic shutdown of vehicle fuel delivery system shall be designed and installed in accordance with NFPA 17, Chapter 9, “Requirements for pre-engineered systems.”

Safety Functions	Functional Requirements	Performance Criteria
Event(s) Where Underground (UG) Vehicle/Equipment FSSs is Credited:		
CH/RH-UG-01-001a, CH/RH-UG-01-002a1, CH/RH-UG-01-002a2, CH/RH-UG-01-002a3 CH/RH-UG-01-004a, CH/RH-UG-01-005a2, CH/RH-UG-01-007a1, CH/RH-UG-01-007a2 CH/RH-UG-01-007a3, CH/RH-UG-01-007a4, CH/RH-UG-01-007a5, CH/RH-UG-01-007a6 CH-UG-01-001a, CH-UG-01-002a1, CH-UG-01-002a2, CH-UG-01-002a3 CH-UG-01-003a1, CH-UG-01-003a2		
Waste Handling Building Fire Suppression System (Section 4.4.3)		
To prevent a small fire from becoming a large fire causing the release of radiological materials in the WHB by detecting fires and discharging water on the affected area, thereby reducing the likelihood of large fires.	Automatically actuate and provide fire suppression to the CH Bay, Room 108, and the Waste Hoist Tower sufficient to prevent fire propagation that could cause the release of radiological material.	The WHB FSS shall be designed and installed in accordance with NFPA 13.
		Flow path is unobstructed from the fire water supply to the two credited WHB risers.
		Fire water pumping capability of 490 gallons per minute (gpm) at ≥ 120 psig to the most demanding riser (Room 108) in the WHB.
		Fire pump auto-start capability with a set point ≥ 125 psig.
		Greater than or equal to 72,180 gallons of fire water available.
Event(s) Where WHB FSS is Credited:		
CH/RH-WHB-01-001a, CH/RH-WHB-02-002a, CH/RH-WHB-04-001a, CH/RH-WHB-04-002a CH/RH-WHB-04-003a, CH-WHB-01-001a1, CH-WHB-01-001a2, CH-WHB-02-001a CH-WHB-04-001a, CH-WHB-04-005a		
Facility Pallet (Section 4.4.4)		
To prevent direct flame impingement on CH Waste Containers in a pool fire to mitigate a release of radiological material.	Shield CH Waste Containers from direct flame impingement by the “fast” fire growth of a pool fire underneath the pallet.	Facility Pallets shall be constructed of ASTM A240, Type 304 steel in a manner such that the pallet (1) has no through hole penetrations that would allow direct flame contact with the container surfaces, and (2) will support the weight of the CH Waste Container load in a pool fire.
Event(s) Where Facility Pallet is Credited:		
CH/RH-UG-01-002a2, CH/RH-UG-01-007a4, CH/RH-UG-01-007a6, CH/RH-WHB-01-001a CH-UG-01-001a, CH-UG-01-002a3, CH-WHB-01-001a1, CH-WHB-01-001a2		

Safety Functions	Functional Requirements	Performance Criteria
Underground Ventilation Filtration System (Section 4.4.5)		
To mitigate the consequences of radiological material releases from internal container fires or deflagrations/overpressurizations, fires involving ordinary combustible materials, fires associated with fuel leaks near the Waste Face (limited in size due to other preventive controls), and loss of confinement to acceptable levels by (1) filtering UG exhaust air prior to its release to the environment, and (2) providing directional airflow toward the Waste Face and away from workers in an active Disposal Room.	The Underground Ventilation Filtration System (UVFS)/Interim Ventilation System (IVS) high-efficiency particulate air (HEPA) filters shall reduce radioactive dose to the collocated worker to < 25 rem.	The UVFS/IVS HEPA filtration shall provide filtration efficiency of ≥ 99 % when challenged with poly-dispersed aerosol particles with a diameter of 0.3-0.7 microns aerodynamic equivalent diameter.
		Differential pressure across HEPA filter banks of ≤ +4.0 inch water gauge (w.g.) and ≥ +0.20 inches w.g.
	The UVFS/IVS shall ensure that all flow from the Disposal Air circuit is filtered prior to release to the environment.	The differential pressure across the 308 Bulkhead is ≤ -0.05 inches w.g. (defined as air moving from E-140 towards S-400 and the Exhaust Shaft) and verifying the flow direction entering the active Disposal Room.
	During downloading of Waste Containers with the Waste Shaft Conveyance, the UVFS/IVS shall ensure that airflow from the Waste Shaft Station is filtered prior to release to the environment.	The differential pressure across the 309 Bulkhead is ≥ +0.05 inches w.g. (defined as air moving from the inside of the BH309 chamber to the Waste Shaft Station) during downloading of Waste Containers when the Waste Shaft Conveyance is in use to transport TRU Waste.
	The UVFS/IVS shall draw air away from workers at the Waste Face.	Airflow shall be monitored at the intake of an Active Room while occupied.
Event(s) Where UG Ventilation Filtration System is Credited: CH/RH-UG-01-001a, CH/RH-UG-02-001a, CH/RH-UG-02-002a1, CH/RH-UG-02-002a2, CH/RH-UG-02-002a3, CH/RH-UG-09-003a, CH/RH-UG-10-003a, CH-UG-01-003a2, CH-UG-06-001a, CH-UG-06-002a		
Contact-Handled Waste Handling Confinement Ventilation System (Section 4.4.6)		
To mitigate the consequences of radiological material releases from non-NPH fire events to acceptable levels by filtering air from the CH Bay, Room 108, or CLR prior to its release to the environment.	The Contact-Handled (CH) Waste Handling (WH) Confinement Ventilation System (CVS) HEPA filters shall reduce radioactive dose to the collocated worker to < 25 rem.	The CH WH CVS HEPA filtration shall provide filtration efficiency of > 99.95 % when challenged with poly-disperse aerosol with 0.3-0.7 micrometer aerodynamic equivalent diameter.
		Differential pressure across HEPA filter banks of ≤ 4 inches w.g.

Safety Functions	Functional Requirements	Performance Criteria
		The TRUDOCK/TRUPACT-III Exhaust filtration shall provide filtration efficiency of ≥ 99.95 percent when challenged with poly-disperse aerosol with 0.3–0.7 micrometer aerodynamic equivalent diameter.
	The CH WH CVS shall maintain a negative pressure in the CH Bay and Room 108 with respect to ambient air pressure.	The pressure in the CH Bay and Room 108 is ≤ -0.01 inches w.g. with respect to ambient air pressure.
Event(s) Where CH WH CVS is Credited: CH/RH-WHB-02-001a CH/RH-WHB-02-002a CH/RH-WHB-20-001a CH-WHB-02-001a CH-WHB-03-001a CH-WHB-04-005a		
Waste Hoist Brakes (Section 4.4.7)		
To prevent damage to TRU Waste Containers by reducing the likelihood of an uncontrolled Waste Conveyance movement that results in a loss of confinement and the release of radiological materials.	The Waste Hoist Brakes shall stop a fully loaded conveyance to prevent an uncontrolled movement of the Waste Hoist that could breach TRU Waste Containers.	The brakes shall apply adequate pressure by the brake pads on the rotor disc to stop a maximally loaded conveyance within 30 feet of travel distance after application of the brakes.
		The Waste Hoist Brakes automatically apply the brakes upon loss of hydraulic pressure due to loss of electric power, or conveyance over speed.
		Brake pad material is ≥ 0.5 inch thick.
Event(s) Where Waste Hoist Brakes is Credited: CH/RH-UG-10-004a		
Underground Fuel and Oil Storage Areas (Section 4.4.8)		
To preclude or eliminate the flammable or combustible liquid hazard resulting in a pool fire or explosion at either storage location from affecting TRU Waste through the provision of a substantial separation distance.	Locations of the UG Fuel and Oil Storage Areas are defined and located a safe distance away from TRU Waste.	The physical locations of the UG Fueling and UG Oil Storage Areas shall be located at or north of the S-90 Drift.
Event(s) Where UG Fuel and Oil Storage Areas is Credited: CH/RH-UG-05-002a		

Safety Functions	Functional Requirements	Performance Criteria
Waste Hoist Support Structure (Section 4.4.9)		
To prevent a radiological material release due to an uncontrolled Waste Conveyance movement that results in a loss of confinement, a fire, or an NPH initiated failure of the Waste Hoist Support Structure by establishing a basis for the low (Unlikely (U) for NPH and Extremely Unlikely (EU) for uncontrolled movement and fires) unmitigated likelihood assignments.	Support the Waste Hoist and a maximum load Waste Conveyance under all normal, upset, and design basis NPH conditions, thereby preventing a loss of confinement.	The Waste Hoist Support Structure shall be designed for the vertical load combination of deadload, maximum payload, and forces transmitted from the hoisting ropes and tailropes during normal operation.
		The Waste Hoist Support Structure shall be designed for a DBE of 0.1 g PGA.
	Prevent failure of the Waste Hoist due to a large fire.	The Waste Hoist Support Structure shall be constructed of noncombustible materials and not subject to failure due to in-situ combustible loads.
Event(s) Where Waste Hoist Support Structure is Credited: CH/RH-UG-10-004a CH/RH-WHB-04-003a CH/RH-WHB-20-002a		
Remote-Handled Facility Casks (Section 4.4.10)		
To mitigate worker exposure to a high radiation source by reducing the gamma and/or neutron surface dose rates through the provision of robust shielding.	Provide radiation shielding to protect facility workers during RH Facility Cask/Light Weight Facility Cask (LWFC) handling or transport.	The closed RH Facility Cask/LWFC shall provide shielding such that the surface dose rate is ≤ 200 mrem/hour when transporting RH Waste.
Event(s) Where RH Facility Casks Shielding is Credited: CH/RH-UG-13-001a		
To prevent the release of radiological material due to fires, impacts, or internal RH Waste Canister deflagrations due to their robust construction reducing the likelihood for release of radiological material.	Maintain confinement integrity for the enclosed RH Waste Canister when the cask is subjected to impacts, and drops.	The closed RH Facility Cask/LWFC shall prevent a breach of the enclosed RH Waste Canister when subjected to impacts.
	Shield RH Waste Canister from flames.	The closed RH Facility Cask/LWFC shall have no penetrations to allow direct flame impingement on the contained RH Waste Canister.
	Maintain confinement integrity of the RH Facility Cask/LWFC when subjected to internal deflagrations.	The closed RH Facility Cask/LWFC shall prevent a release when subjected to internal RH Waste Canister deflagrations.

Safety Functions		Functional Requirements	Performance Criteria
Event(s) Where RH Facility Casks Structural Integrity is Credited:			
CH/RH-UG-01-001a	CH/RH-UG-01-002a1	CH/RH-UG-01-002a2	CH/RH-UG-01-002a3
CH/RH-UG-01-004a	CH/RH-UG-01-005a1	CH/RH-UG-01-005a2	CH/RH-UG-01-007a1
CH/RH-UG-01-007a2	CH/RH-UG-01-007a3	CH/RH-UG-01-007a4	CH/RH-UG-01-007a5
CH/RH-UG-01-007a6	CH/RH-UG-02-001a	CH/RH-UG-02-002a1	CH/RH-UG-02-002a2
CH/RH-UG-02-002a3	CH/RH-UG-02-002a4	CH/RH-UG-06-001a	CH/RH-UG-10-005a
CH/RH-UG-28-001a	CH/RH-WHB-02-001a	CH/RH-WHB-02-002a	CH/RH-WHB-04-001a
CH/RH-WHB-04-002a	CH/RH-WHB-04-003a	CH/RH-WHB-25-001a	CH/RH-WHB-28-001a2
RH-UG-01-001a1	RH-UG-01-001a2	RH-UG-01-002a1	RH-UG-01-002a2
RH-UG-02-002a	RH-UG-04-002a	RH-UG-06-001a	RH-WHB-01-001a
Type B Shipping Package (Section 4.4.11)			
To limit the release of radiological material from fires, payload deflagration, and/or collisions due to its robust construction and qualification under accident conditions, thereby mitigating the consequences of an event, and its installed shielding on the RH 72-B Packages reduces the likelihood for excessive gamma and/or neutron exposure to workers.		Maintain confinement of the enclosed TRU Waste Containers when subjected to ordinary combustible fires, pool fires, and impacts.	The Type B Shipping Package shall meet criteria of 10 CFR 71.
		Limit release from internal TRU Waste Container deflagration.	The Type B Shipping Package shall meet criteria of 10 CFR 71.
		Provide radiation shielding to protect facility workers.	The Type B Shipping Package shall meet criteria of 10 CFR 71.
Event(s) Where Type B Shipping Package is Credited:			
CH/RH-EXT-18-001a	CH/RH-OA-01-002a	CH/RH-OA-02-001a	CH/RH-OA-02-002a
CH/RH-OA-05-001a	CH/RH-OA-06-001a	CH/RH-OA-09-001a	CH/RH-OA-09-002a
CH/RH-OA-10-001a	CH/RH-OA-10-002a	CH/RH-OA-16-001a	CH/RH-OA-17-001a
CH/RH-OA-19-001a	CH/RH-OA-20-001a	CH/RH-OA-21-001a	CH/RH-OA-21-002a
CH/RH-OA-22-001a	CH/RH-OA-22-002a	CH/RH-OA-23-001a	CH/RH-OA-24-001a
CH/RH-OA-25-001a	CH/RH-OA-26-001a	CH-OA-10-001a	RH-WHB-01-001a
RH-WHB-01-002a	RH-WHB-02-001a	RH-WHB-04-002a	RH-WHB-06-001a
RH-WHB-09-001a	RH-WHB-09-003a	RH-WHB-10-001a	RH-WHB-10-003a1
RH-WHB-10-005a			
Facility Cask Loading Room, Cask Unloading Room, and Transfer Cell Shielding (Section 4.4.12)			
To mitigate worker exposure to a high radiation source by providing permanent radiation shielding when RH Waste Canisters are not shielded by other SSCs (e.g., Type B Shipping Package, RH Facility Cask, or LWFC).		Provide radiation shielding to protect facility workers during Cask Unloading, Transfer Cell, and Facility Cask Loading operations.	The Facility Cask Loading Room (FCLR), Cask Unloading Room (CUR), and Transfer Cell walls, ceiling, floors, windows, shall provide shielding such that the external dose rate is ≤ 200 mrem per hour.

Safety Functions	Functional Requirements	Performance Criteria
Event(s) Where FCLR, CUR, and Transfer Cell Shielding is Credited: CH/RH-WHB-13-001a2		
Panel 6 and Panel 7, Room 7 Bulkheads (Section 4.4.13)		
To reduce the quantity of material that could be released from an exothermic chemical reaction within a CH Waste Container located in Panel 6, or Panel 7, Room 7, by creating static conditions that resist transmission of particulate and allow for gravitational settling.	The Panel 6, and Panel 7, Room 7 bulkheads isolate closed Disposal Rooms and/or panels from the active ventilation system to contain any potential releases, and minimize leakage outside the closed areas.	The Panel 6, and Panel 7, Room 7 bulkheads are a solid noncombustible wall (except for flexible flashing) that is secured to the Panel opening (i.e., walls, ceiling, floor).
Event(s) Where Panel 6 and Panel 7, Room 7 Bulkheads are Credited: CH-UG-06-002a		
Vehicle Barriers (Section 4.4.14)		
To reduce the likelihood for release of radiological material from CH Waste in the WHB due to impacts by vehicles and/or fires adjacent to the southwest wall of the CH Bay by providing a standoff distance from the CH Bay and substantial resistance to vehicular impacts.	The Vehicle Barriers shall be installed to prevent entry of vehicles/ equipment containing liquid-combustibles into the area immediately adjacent to the CH Bay southwest wall between Airlock 100 and the TMF.	A configured set of concrete barriers consisting of two sections: section one is a two-row barrier positioned approximately 5 feet west of the CH Bay/TMF common wall and extending south from the TMF south exterior wall a minimum distance of 25 feet; and section two is a single row barrier, positioned a minimum 25 feet south of the CH Bay southwest exterior wall extending between Airlock 100 to a point nominally 5 feet west of the CH Bay/TMF common wall to intersect with the double row of barriers. An opening with a gap ≤ 3 feet at the intersection of the east-west barrier and the double row of barriers is permitted. The nominal distances and configuration of the barriers are depicted in Chapter 2.0, Figure 2.4-7, which shows nominal dimensions.
Event(s) Where Vehicle Barriers are Credited: CH/RH-WHB-04-002a		

4.4.1 Waste Handling Building Structure

The WHB is the aboveground structure in which TRU Waste is received. The WHB provides protection of TRU Waste Containers once they are removed from their Type B Shipping Packages until they are

transferred to the UG. The WHB structure, including the CH Bay, Room 108, RH Bay, CUR, Transfer Cell, FCLR, and Waste Hoist Tower, is selected as a SS control.

4.4.1.1 Safety Function

The WHB is credited to protect Initial Conditions (ICs) of this analysis through the performance of the following multiple Safety Functions:

- To prevent radiological material releases due to seismic induced collapse of the WHB.
- To prevent radiological material releases due to high winds, tornadoes, and/or wind/tornado generated induced collapse of the WHB.
- To prevent radiological material releases due to snow/ice roof loading induced collapse of the WHB.
- To prevent radiological material releases due to propagating fires through the structure from externally initiated fires or through roof collapse from credible internal fire scenarios.
- To prevent radiological material releases due to loss of confinement from vehicle/equipment drop down the Waste Shaft.

4.4.1.2 System Description

The WHB structure includes the CH Bay, Room 108, RH Bay, CUR, Transfer Cell, FCLR, and Waste Hoist Tower. Physically connected to the WHB are the TMF on the west end of the CH Bay and the Support Building north of the CH Bay.

The WHB is a steel-frame structure with insulated steel siding. The noncombustible materials (steel and concrete) used in the construction of the WHB minimize fire propagation into and within the WHB. The WHB is constructed in accordance with the requirements of NFPA 220, *Standards on Types of Building Construction*, Type II construction.

The WHB is designed and constructed for the following:

- DBE of 0.1 g PGA.
- DBT with 183 mph straight-line tornado winds or straight-line winds of 110 mph.
- Roof loading of 27 lb/ft^2 snow/ice load for the WHB, including the Hot Cell Complex and Waste Hoist Tower.

The TMF is designed and constructed to withstand the DBE and DBT and its roof has a design snow load of 27 lb/ft^2. The main lateral-force-resisting structural members of the Support Building are designed to withstand the DBE and DBT to prevent the Support Building from collapsing on the WHB.

The WHB is described in Chapter 2.0, Section 2.4.1 of this DSA, while the design parameters are described in SDD-CF00-GC00, *Plant Buildings, Facilities, and Miscellaneous Equipment System Design Description*.

Boundaries and Interfaces

The WHB structure boundary is considered to be the physical exterior structure of the building. The WHB boundary with the UG is the top of the Waste Shaft Collar where the Waste Conveyance exits the UG.

The WHB structure interfaces with potential to affect the Safety Function include the following:

- **TMF**: The west wall of the CH Bay is the east wall of Building 412, the TMF. The TMF is designed and constructed to withstand the DBE and DBT and its roof has a design snow/ice load of 27 lb/ft^2.
- **Support Building**: The main lateral-force-resisting structural members of the Support Building, located on the north side of the WHB, are designed to withstand the DBE and DBT to prevent the Support Building from collapsing on the WHB. The Support Building, which is adjacent and connected to the WHB via the Access Corridor, is constructed to withstand a snow/ice roof dead load of 10 lbs/ft^2.

4.4.1.3 Functional Requirements

Table 4.4.1-1 restates each of the WHB design Safety Functions and identifies the corresponding minimum functional requirements necessary to perform the stated Safety Functions.

Table 4.4.1-1. Functional Requirements for the Waste Handling Building Facility Structure Design

Safety Function	Functional Requirements
To prevent radiological material releases due to seismic induced collapse of the WHB.	WHB does not collapse during the DBE.
To prevent radiological material releases due to high winds, tornadoes, and/or wind/tornado generated induced collapse of the WHB.	WHB does not collapse during the DBT or high wind.
To prevent radiological material releases due to snow/ice roof loading induced collapse of the WHB.	WHB roof does not collapse following the design basis snow/ice fall.
To prevent radiological material releases due to propagating fires through the structure from externally initiated fires or through roof collapse from credible internal fire scenarios.	External fires do not penetrate WHB exterior.
	The WHB shall maintain its structural integrity during credible fire scenarios.
To prevent radiological material releases due to loss of confinement from vehicle/equipment drop down the Waste Shaft.	Waste Shaft access via the CLR precludes direct and unrestricted vehicle/equipment access to the Waste Shaft.

4.4.1.4 System Evaluation

This subsection provides the performance criteria for the WHB facility structure that characterizes the capabilities necessary to meet the functional requirements listed in Table 4.4.1-1 and evaluates its capability to meet these performance criteria. The Performance Criteria and associated Performance Evaluations are provided in Table 4.1.1-2.

Table 4.4.1-2. Performance Criteria and Performance Evaluation for the Waste Handling Building Facility Structure Design

Functional Requirements	Performance Criteria	Performance Evaluation
Seismic: WHB does not collapse during the DBE.	The WHB is designed to withstand a DBE with 0.1 g PGA.	DOE-STD-1020-2012, *Natural Phenomena Hazards Analysis and Design Criteria for Department of Energy Facilities*, provides that superseded standards are "…available for reference and use at existing facilities…" The WHB has been classified as SS; therefore it is required to meet PC-2 criteria of DOE-STD-1020-2002, which refers to International Building Code (IBC) 2000 for seismic criteria which establishes a 0.06 g seismic criteria for the WIPP site as documented in CALC 15-009, *Natural Phenomena Hazard Assessment of Waste Handling Building*. WIPP is situated in a UBC Seismic Zone 1 region. The WHB is designed to withstand a DBE with 0.1 g PGA with a 1,000-year return interval. The analysis is documented in SDD CF00-GC00. The original facility construction, designed to survive a 0.1 g PGA with a 1,000-year return period, is more robust when compared to the current PC-2 requirements for the WIPP geological location. The 2008 or the 2014 U.S. Geological Survey national hazard map shows that at the WIPP site (UBC Seismic Zone 1), a 0.1 g PGA would have approximately a 2500-year return interval. A 1,000-year return interval would require the WHB to survive a significantly lower PGA of approximately 0.06. In June 2009, a re-assessment of NPH was performed on the WHB in accordance with DOE Order 420.1C, Chapter IV, Section 3.c. The assessment verified no changes to NPH intensities and no significant changes in WHB SSCs. Seismic qualification of equipment at WIPP is directed by Specification 11005-014, *Seismic Qualification of Equipment*, Rev. 2. The TRUDOCK Cranes are seismically qualified as documented in M-07455080-Z, *Ederer Crane Serial No's F2789A & F2789B* and *Seismic Qualification, Ederer Crane Serial No's F2709 & F2710,* and confirmed in 09-BF1010, Rev. 0, *Backfit Analysis - Trudock Cranes and Crane Rails*. Therefore, the WHB, as designed, is capable of performing its Safety Function by not collapsing due to a DBE.
	The TMF (Building 412) is designed to withstand a DBE with 0.1 g PGA.	The TMF, which is adjacent to the WHB and shares a common wall with the CH Bay, is constructed to withstand the 0.1 g DBE. The ability for the TMF structure to withstand a DBE is documented in CS-41-D-851, *TRUPACT Maintenance Facility Horizontal Seismic Analysis*, and CS-41-D-852, *Seismic Analysis – Vertical TRUPACT Maintenance Facility*. Therefore, the TMF will not fail in a manner to degrade the ability for the WHB to perform its DBE Safety Function.
	The main lateral-force-resisting structural members of the Support Building are designed to withstand	The adjacent Support Building (office building) is designed so that its main lateral-force-resisting structural members prevent the Support Building from collapsing on the WHB during a DBE. The ability for the Support Building structure to withstand a DBE is documented in D-76-D01, *Design Basis*, and CS-45-D-481, *Seismic Analysis of Support Building*. Therefore, the Support Building will not fail in a

Functional Requirements	Performance Criteria	Performance Evaluation
	a DBE with 0.1 g PGA.	manner to degrade the ability for the WHB to perform its DBE Safety Function.
High Wind and Tornado: WHB does not collapse during the DBT or high wind.	The WHB is designed for a DBT of 183 mph winds with a translational velocity of 41 mph, tangential velocity of 124 mph, a maximum rotational velocity radius of 325 feet, a pressure drop of 0.5 pounds per square inch (psi) and a pressure drop rate of 0.09 psi per second.	DOE-STD-1020-2012 provides that superseded standards are "…available for reference and use at existing facilities…" The WHB has been classified as SS; therefore, it is required meet PC-2 criteria of DOE-STD-1020-2002 which refers to IBC 2000 for tornado criteria. IBC 2000 does not address DBT criteria as documented in CALC 15-009. The tornado wind load characteristics of the DBT are based on the recommendations in MRP No. 155, *A Site-Specific Study of Wind and Tornado Probabilities at the WIPP Site in Southeast New Mexico*. The DBT characteristics were evaluated to be a tornado of 183 mph winds with a translational velocity of 41 mph, tangential velocity of 124 mph, a maximum rotational velocity radius of 325 feet, a pressure drop of 0.5 psi and a pressure drop rate of 0.09 psi per second, with a return period of 106 years. The ability for the WHB structure to withstand a DBT is based on analyses identified in SDD CF00-GC00. Therefore, the WHB, as designed, is capable of performing its Safety Function by not collapsing onto TRU Waste Containers due to a DBT.
	The WHB is designed to withstand straight-line wind of 110 mph, at 30 feet above ground.	DOE-STD-1020-2012 provides that superseded standards are "…available for reference and use at existing facilities…" The WHB has been classified as SS; therefore, it is required to meet PC-2 criteria of DOE-STD-1020-2002 which refers to IBC 2000 for high wind criteria which establishes a 90 mph wind for the WIPP site as documented in CALC 15-009. The straight-line wind characteristics were evaluated to be a straight-line wind of 110 mph, at 30 feet above ground, with a 1,000 year mean recurrence interval. The ability for the WHB structure to withstand a straight-line wind is based on analyses identified in SDD CF00-GC00. Therefore, the WHB, as designed, is capable of performing its Safety Function by not collapsing onto TRU Waste Containers due to the design basis straight-line wind.
	The TMF (Building 412) is designed to withstand a DBT.	The TMF, which is adjacent to the WHB and shares a common wall with the CH Bay, is constructed to withstand the DBT. The ability of the TMF structure to withstand a DBT is documented in CS-41-D-802, *Wind and Tornado Loads for TRU-PACT Extension*. Therefore, the TMF will not fail in a manner to degrade the ability of the WHB to perform its DBT Safety Function.
	The main lateral-force-resisting structural members of the Support Building are designed to withstand a DBT.	The adjacent Support Building (office building) is designed so that its main lateral-force-resisting structural members prevent the Support Building from collapsing on the WHB during a DBT. The ability for the Support Building structure to withstand a DBT is documented in D-76-D01, *Design Basis*, and CS-45-D-481, *Seismic Analysis of Support Building*. Therefore, the Support Building will not fail in a manner to degrade the ability for the WHB to perform its DBT Safety

Functional Requirements	Performance Criteria	Performance Evaluation
		Function.
Snow Load: WHB roof does not collapse following the design basis snow/ice fall.	WHB roof is designed to withstand 27 lb/ft^2 of snow/ice load.	DOE-STD-1020-2012 provides that superseded standards are "…available for reference and use at existing facilities…" The WHB has been classified as SS; therefore, it is required to meet PC-2 criteria of DOE-STD-1020-2002, which refers to IBC 2000, which established an 8 lb/ft^2 for roof snow/ice loading criteria for the WIPP site as documented in CALC 15-009. The snow/ice load characteristics were evaluated to be a maximum snowpack for the WIPP region of 10 lb/ft^2 with a 100-year recurrence interval. The WHB roof is designed to withstand 27 lb/ft^2. The ability for the WHB structure to withstand the design basis snow/ice load is based on analyses identified in SDD CF00-GC00. Therefore, the WHB, as designed, is capable of performing its Safety Function by not collapsing onto TRU Waste Containers due to the design basis snow/ice loading.
	TMF roof is designed to withstand 27 lb/ft^2 of snow/ice load.	The TMF, which is adjacent to the WHB and shares a common wall with the CH Bay, is constructed to withstand a snow/ice roof loading of 27 lbs/ft^2. The ability for the TMF structure to withstand a snow/ice roof loading of 27 lb/ft^2 is documented in CS-41-D-124, *Analysis & Design of Waste Handling Building Main Columns*, and URS Letter of Transmittal, *Roof Study for Additional Loads*. Therefore, the TMF will not fail in a manner to degrade the ability for the WHB to perform its snow/ice loading Safety Function.
	Support Building roof is designed to withstand 10 lb/ft^2 of snow/ice dead load.	The Support Building, which is adjacent and connected to the WHB via the Access Corridor is constructed to withstand a snow/ice roof dead load of 10 lbs/ft^2. The ability for the Support Building structure and Access Corridor to withstand a snow/ice roof loading of 27 lb/ft^2 is documented in ETO-Z-244, *Structural Evaluation of Support Building Integrity When Subjected to 27 psf Snow Load*, based on the combined dead load of 10 lbs/ft^2 and the added live load of 20 lbs/ft^2. Therefore, the Support Building and Access Corridor will not fail in a manner to degrade the ability for the WHB to perform its snow/ice loading Safety Function.
WHB Noncombustible Construction: External fires do not penetrate WHB exterior.	Construction of external WHB walls and curbing shall ensure external fires do not propagate to areas inside the building.	WIPP-023, *Fire Hazards Analysis for the Waste Isolation Pilot Plant* (FHA), Sections 5.2.1, 5.6, and 6.0, concludes that the noncombustible construction of the external walls of the WHB, physical separation between most facilities, and building exposures being NFPA 80A compliant, provide sufficient fire protection for the waste stored inside the building. The outer edge of the CH Bay base slab is curbed such that a spill of liquid-combustibles outside the CH Bay will not enter the building and therefore, not contribute to a potential pool fire event within the CH Bay. Additionally, an exclusion area protected by Vehicle Barriers along this south wall ensures that fueled vehicles/equipment are not permitted in these areas to reduce the likelihood for pool fires adjacent to the exterior CH Bay walls. Therefore, the WHB, as designed, is capable of performing its Safety Function by preventing external fires from penetrating the WHB

Functional Requirements	Performance Criteria	Performance Evaluation
		exterior.
The WHB shall maintain its structural integrity during credible fire scenarios.	WHB shall not collapse as a result of credible fire scenarios.	WIPP-023, Section 5.5, includes a review of the possibility of fire-induced roof collapse. That review draws on the current pool fire analysis methodology (specifically designed to maximize postulated container damage by maximizing pool diameter) to show that roof failure would not occur. Pool fires occurring in the RH Bay as analyzed in WIPP-058 have the potential to weaken structural steel columns which could result in the collapse of the WHB roof onto CH Waste located in the CH Bay. This vulnerability is addressed through a SAC (Section 4.5.13) that requires vehicle/equipment with liquid-combustible capacity in the RH Bay to be attended whenever CH Waste is present in the CH Bay outside of closed Type B Shipping Packages.
WHB Waste Shaft Access Configuration: Waste Shaft access via the CLR precludes direct and unrestricted vehicle/ equipment access to the Waste Shaft.	The route of vehicle/ equipment to the Waste Shaft shall prevent a direct, unencumbered path to the Waste Shaft.	CLR access doors from the CH Bay and from outside the WHB are perpendicular to the Shaft Entry Room access door (Door 156). The FCLR access door from the RH Bay is perpendicular to the Shaft Entry Room access door (Door 155). Right angle access to Shaft Entry Room after entering CLR or FCLR, and limited straight-line distance between access point and Shaft Entry Room prevents significant vehicle acceleration that could lead to uncontrolled vehicle movements. Additionally, the Waste Conveyance Control described in Section 4.5.7 ensures that Doors 155 and 156 are closed when waste is present in the Waste Shaft and the conveyance is not secured at the Waste Shaft Collar. This prevents vehicles/equipment from dropping onto a waste load while it is being transferred to the UG. Therefore, the WHB Waste Shaft Access Area, as designed, is capable of precluding direct and unrestricted vehicle/equipment access to the Waste Shaft.

On this basis, it has been determined that the WHB is capable of performing the Safety Functions.

4.4.1.5 Technical Safety Requirements (TSRs)

The following specific attributes of the WHB are required to be protected in the TSRs:

- The WHB is designed as follows for NPH events:
  - DBE with 0.1 g PGA.
  - DBT of 183 mph winds with a translational velocity of 41 mph, a maximum rotational velocity radius of 325 feet, a pressure drop of 0.5 pounds-force per square inch (psig) and a pressure drop rate of 0.09 psig per second.
  - Straight-line wind of 110 mph, at 30 feet above ground.
  - Snow/ice load of 27 lb/ft^2.
- The TMF and Support Building are designed and constructed to not degrade the ability of the WHB to survive NPH events.

- The non-combustible construction of external walls and curbing shall ensure external fires do not propagate to areas inside the building.
- The WHB shall maintain its structural integrity during credible fire scenarios.
- The route of vehicle/equipment to the Waste Shaft prevents a direct, unencumbered path to the Waste Shaft.
- The TRUDOCK Cranes are designed for the DBE with 0.1 g PGA.

4.4.2 Underground Vehicle/Equipment Fire Suppression Systems

Vehicles and equipment with a significant combustible liquid capacity that are selected for use near CH Waste are equipped with an automatic FSS. The automatic FSS on UG vehicles/equipment required by the NFPA-122 analysis that are selected for use in the Waste Shaft Station when CH Waste is present, when transporting CH Waste in the Vehicle Exclusion Zone (VEZ), when transporting CH Waste between the VEZ and the CH Waste Face, and any other vehicles/equipment to be operated within 200 feet of the CH Waste Face is selected as a SS control.

4.4.2.1 Safety Function

The Safety Function of the UG Vehicle/Equipment FSSs is to automatically detect and suppress developing stage fires associated with engine compartment and/or fuel and hydraulic line leaks, thereby reducing the likelihood of pool fires involving CH Waste.

4.4.2.2 System Description

UG vehicles/equipment with fuel and/or hydraulic fluids are equipped with a pre-engineered, automatically actuated dry chemical FSS in accordance with NFPA 17, *Standard for Dry Chemical Extinguishing Systems*. A typical automatic FSS is composed of a heat detector sensor, a reservoir of dry chemical fire suppressant, and a delivery system with nozzles that directs the fire suppressant to areas where a fire would most likely occur. The heat of a fire automatically actuates the FSS or as an option the system may be actuated manually.

The UG vehicles/equipment with a significant combustible liquid capacity that require an automatic FSS were determined by the hazard evaluation completed per the NFPA-122 requirements. WIPP-058, Revision 2, *DSA Supporting Calculations, Fuel Spill, HEPA Filter Plugging, and Compartment Over Pressurization*, identifies the basis for determining the vehicles that require a FSS based on the NFPA-122 hazards analysis. ETO-Z-157 identifies the UG diesel powered vehicles/equipment that require an automatic FSS. The UG vehicle/equipment FSS is credited with reducing the likelihood of a fire involving the vehicle/equipment or combustible liquids associated with the vehicle/equipment that could affect CH Waste containers and result in a radioactive material release. This applies to vehicles with a significant combustible liquid capacity (greater than or equal to 29 gallons per WIPP-058) that are within 200 feet of CH Waste. WIPP-058 concludes that a fuel spill associated with a Lube Truck which has the largest capacity of liquid combustibles in a 16-foot drift extends approximately 108 feet on each side of the spill. Additionally, a standoff distance of approximately 8 feet from the edge of the pool is sufficient to maintain the radiant heat flux to less than 15.9 kW/m^2 on the CH Waste containers. To ensure the total standoff distance calculated in WIPP-058 is protected, the distance for the safety analysis is conservatively established as 200 feet for UG vehicles/equipment to have an installed FSS.

The FSS on the UG vehicles/equipment are specifically designed for each vehicle/equipment based on the fire hazards associated with the particular vehicle. The UG vehicle/equipment FSSs are installed by a

qualified service technician or manufacturer's representative. The installer certifies that the installation has been made in accordance with the approved plans, where required, and the manufacturer's design, installation, and maintenance manual. UG vehicle/equipment FSSs meet the requirements of NFPA 17, Chapter 9, "Requirements for Pre-Engineered Systems," specifically Section 9.9. NFPA 17 defines a "Pre-Engineered System" as those systems having predetermined flow rates, nozzle pressures, and quantities of extinguishing agent and having specific pipe size, maximum and minimum pipe lengths, flexible-hose specifications, number of fittings, and number and types of nozzles." NFPA 17, Section 9.1.2, requires "Fire-extinguishing systems referenced in 9.1.1 shall comply with ANSI/UL 1254, *Pre-Engineered Dry Chemical Extinguishing System Units*, or equivalent listing standard." The UG liquid-fueled vehicle/equipment FSSs are fully Factory Mutual (FM) and/or Underwriters Laboratory (UL) approved and comply with the requirements for pre-engineered FSSs. The systems are installed and tested per NFPA 17, Section 10, to demonstrate the system has been properly installed and will function as intended. The FSS on each vehicle is designed and installed specifically for each vehicle based on a detailed fire hazards analysis of the vehicle and provides suppression for all potential fire locations in accordance with NFPA requirements.

The UG vehicle/equipment FSS is composed of the following components. There is a heat sensor system (fire detection) that is routed within significant fire hazard areas. The control system (Control Panel) interprets the sensor output signals, initiates discharge of the system, and performs diagnostic tests of the system to confirm the system is operable. The status indicating lights indicate if the system is operable or inoperable. There is a distribution system, essentially composed of piping or tubing that carries the extinguishing agent to nozzles located at each hazard area. The extinguishing agent is a dry chemical Type ABC fire suppressant powder. It is stored in a container and is dispersed through the system via a pressurized gas.

UG vehicles use a FSS manufactured either by Ansul or Amerex. If the Ansul System is used, there are two separate cylinders. One cylinder holds the dry powder extinguishing agent. The other cylinder holds the gas (nitrogen) that is used to propel the extinguishing powder through the system. The control panel on the Ansul System does not have a "Push to Test" button to allow verification that the system is operable. Instead, if the Ansul System is connected to a battery, the control panel is monitoring the system for the appropriate inputs to determine if the system is operable. If the Ansul FSS is operable, the green status light is illuminated or flashes.

The Amerex System uses a pressurized cylinder that holds the chemicals in two separate chambers. One chamber contains a dry chemical agent (Type ABC). The other chamber, which is provided for turbocharged vehicles and vehicles rated with greater than 150 horsepower, contains a liquid cooling agent designated by the manufacturer as a liquid based integrated cooling material (ICE). The cooling agent acts as a quenching compound that cools heated elements of the equipment. The ICE is a supplemental system that is not required by the safety analysis but is installed for defense-in-depth. The ICE system is not required by NFPA-17 but is an option that was added for the high-value vehicles. The ICE is not credited with extinguishing a fire because the Amerex System dry powder extinguishing agent, which has about two times the amount of dry powder suppressant in the Ansul System, will extinguish the developing stage fire. The FHA credits the ICE with preventing re-ignition of a fire as result of a combustible liquid coming into contact with a very hot metal component (heated up by the fire). The UG vehicle/equipment FSS is credited with automatically detecting and extinguishing a fire in the developing stage. Extinguishing the fire in the developing stage will prevent significant heating of the surrounding metal, which will reduce the potential for re-ignition. Therefore, although the ICE is an element of the FSS, it is not required by the appropriate national standards, is not needed to extinguish the developing stage fire, and is not credited as part of the operable FSS. The Ansul System, which has less dry powder extinguishing agent, is an acceptable system to extinguish a developing stage fire on the vehicles on

which it is installed. The Amerex System, with about two times as much dry powder as an extinguishing agent as the Ansul System and is designed specifically for the vehicle on which it is installed, is capable of extinguishing a developing stage fire using only the dry powder extinguishing agent. The Amerex System does not rely on the ICE function to extinguish the fire.

For either system, the fire suppressant discharge nozzles are located in the engine compartment and other vehicle fire hazard locations. The number of nozzles and amount of discharge agent are designed to meet the specific fire potential for each vehicle. Discharge piping is located inside frames and enclosures throughout the vehicle where they are less susceptible to damage from impacts and collisions. The control panel, sensors, and tanks are located on areas of the vehicle where they are not susceptible to direct damage from impacts.

The control system for the FSS is a proprietary controller supplied by the manufacturer to work as an integral component in the FSS. The controller is fully enclosed and has no programming functions available to the end user with the exception of some temperature set point and time delay adjustments set by a certified installer. All connections to the controller are made via factory wired harnesses for a plug and play installation. The controller is inside the control panel. The control panel is functionally tested or verified to be operable each time the vehicle/equipment with a FSS is used. The control panel has two lights (light emitting diodes (LEDs)) to show the system status. A green LED illuminates to show that the system is operable, while a red LED illuminates (flashes) if there are inoperable components of the FSS. The Amerex Control Panel has a “Push to Test” button that when pushed illuminates all the LEDs and sounds the audible alarm. The Ansul System does not have the “Push to Test” button. Verification of system operability of the Ansul System is by viewing the status lights to ensure the green LED is illuminated.

Sensors are located in potential fire locations on the vehicle as determined by a detailed FHA performed by certified qualified system designers and installers to provide the necessary monitoring in areas of the engine compartment and other areas vulnerable to fire. The sensors installed on WIPP UG equipment are generally the linear detection cable type, which are routed within the hazard area. The sensors respond to fire temperatures (typically at 450°F but may respond at lower temperatures of 325°F or greater depending upon the rating of the sensor) and send a signal to the control panel. The specific sensor selected is based on the normal ambient conditions of the space and the type of fire expected. The control panel interprets this signal to initiate discharge activation by proprietary logic that is not accessible to the end user. The discharge activation is initiated by the heat sensor with a signal to the Control Panel, which then activates the discharge mechanism. The suppressant discharge can be initiated at any time either by the distributed sensors or by the non-credited manual activation. Only the automatic FSS detection and activation is credited in the safety analysis. Relay timers shut down the engine when the controller initiates discharge. A suppression system status light indicates the system monitoring and actuation functions are operable.

Upon detection of a fire, the controller automatically shuts down the vehicle engine and initiates the discharge of both the ABC Type dry chemical and, if applicable, the liquid based integrated cooling (Amerex System only). Additionally, the system can be manually actuated by the operator either from the vehicle cab or ground level. The safety analysis credits the automatic detection and activation capability of the FSS. The manual activation is a non-credited defense-in-depth system. For the Ansul System, the controller activates an electrically fired squib that penetrates the disc on the gas cylinder allowing the gas to flow to the cylinder containing the powder. From there the rupture disc on the powder cylinder bursts allowing the pressurized powder to flow through the distribution system. On the Amerex System, the controller actuates a valve that opens and allows the pressurized extinguishing agent and integrated cooling, if applicable, to flow through the distribution system.

Both systems have a pressure gauge on the gas cylinder or the pressurized agent cylinder. These pressure gauges are only used for local indication of the status of the pressure (e.g., is the pressure in the operating range) and allow the operator to check if the system pressure is within the normal operating range. The pressure gauges are not connected to the inputs to the Control Panel. An electronic signal is sent from the cylinders to the Control Panel that indicates the system pressure. It is the electronic monitoring by the Control Panel that determines if the system pressure is in the normal operating range and ensures the system is operational. The local indicating pressure gauges are not credited in determining system operability as they are not part of the electronic monitoring system inputs to the Control Panel.

Boundaries and Interfaces

The UG Vehicle/Equipment FSS is limited to the vehicle on which it is installed. The UG Vehicle/ Equipment FSS does not rely on any other SSC to perform the Safety Function.

4.4.2.3 Functional Requirements

Table 4.4.2-1 restates the Safety Function and identifies its corresponding minimum functional requirements necessary to perform the stated Safety Functions.

Table 4.4.2-1. Functional Requirements for Underground Vehicle/Equipment Fire Suppression System

Safety Function	Functional Requirements
To automatically detect and suppress developing stage fires associated with engine compartment and/or fuel and hydraulic line leaks, thereby reducing the likelihood of pool fires involving CH Waste.	The FSS shall survive a low speed collision.
	The FSS shall automatically detect developing stage fires associated with the engine compartment and/or fuel and hydraulic line leaks.
	Upon detection of a developing stage fire, the FSS shall automatically discharge a fire suppressant into the engine compartment and designated heat source locations to extinguish the fire.
	Upon actuation of the extinguishing systems, the engine shall shut down automatically.

4.4.2.4 System Evaluation

This subsection provides the performance criteria for the UG Vehicle/Equipment FSS that characterizes the system capabilities necessary to meet the functional requirements listed in Table 4.4.2-1 and evaluates its capability to meet these performance criteria. The performance criteria and associated evaluations are provided in Table 4.4.2-2.

Table 4.4.2-2. Performance Criteria and Performance Evaluation for the Underground Vehicle/Equipment Fire Suppression System

Functional Requirements	Performance Criteria	Performance Evaluation
The FSS shall survive a low speed collision.	The FSS components shall be located in a position to preclude a	No formal analysis of the survivability of the FSS in a low speed collision is available. Mining vehicles/equipment are industrial type, robustly constructed vehicles that are designed for rough handling

Functional Requirements	Performance Criteria	Performance Evaluation
	direct impact vehicle collision.	and terrain associated with mining operations, will withstand minor impacts with little or no damage, and will provide protection to the FSS components. The electronic controls associated with these systems are designed for a rugged industrial environment with constant vibration, heat, and dust associated with the mining environment. Vehicles operate at low speeds (e.g., typically less than 10 mph) due to the following: • Drifts provide limited area for vehicle operation, thereby impeding higher speeds • Limited speed capability • Rough terrain Pre-operational checks verify the visible parts of the FSS are not damaged. Additionally, the FSS components are mounted/attached to the vehicle in a manner that avoids a direct impact from a vehicle collision. The tanks are mounted to the vehicle tops (e.g., above fenders or on the back of the vehicle behind the operator's compartment) where they are not susceptible to damage from a direct vehicle impact along any side or the front or back of the vehicle. The control panels are located in or near the operator compartment such that the control panel is not subject to a direct impact. The sensors, wiring harness, suppressant distribution system, and nozzles are typically run internally to the vehicle where they are well protected from damage from a slow speed collision. As the control panel and cylinders are generally mounted on the top of the vehicle, they are subject to direct impacts from debris and/or something that falls vertically onto the vehicles. The risk of a direct vertical drop impact and an impact from flying debris that is large enough to damage the fire suppression components is considered to be very low. This is an acceptable risk as the operator and/or Attendant will be able to determine if the exposed FSS components were impacted. Additionally, the daily pre-operational visual checks of the vehicles will identify any damage to the FSS components. Additional measures, protected by SS controls, are implemented to reduce the occurrence of impacts as follows: • UG TRU Waste transport routes and vehicle/equipment operations in Disposal Rooms are controlled. • Vehicles/equipment within ≤ 25 feet of the CH Waste Face, within the VEZ, between the termination of the VEZ and the CH Waste Face, and in the Waste Shaft Station when CH Waste is present, are Attended to prevent collisions by identifying and avoiding obstructions or other nearby vehicles that could cause a collision. The robust construction of the mining vehicles/equipment, speed limitations, operator training and qualification, and requirements for UG vehicles/equipment to be Attended near TRU Waste are collectively judged to meet the functional requirement and the

Functional Requirements	Performance Criteria	Performance Evaluation
		performance criteria.
The FSS shall automatically detect developing stage fires associated with the engine compartment and/or fuel and hydraulic line leaks.	Automatic detection shall be designed and installed in accordance with NFPA 17, Chapter 9, "Requirements for pre-engineered systems."	The FSS on each vehicle is designed and installed specifically for each vehicle based on a detailed fire hazards analysis of the vehicle and provides suppression at all potential fire locations in accordance with NFPA requirements. The UG vehicle/equipment FSSs meet the requirements of NFPA 17, and are fully FM and/or UL-approved for a pre-engineered FSS. The systems are installed and tested per NFPA 17, Section 10, to demonstrate the system has been properly installed and will function as intended. The NFPA requirements ensure that only system components referenced in the manufacturer's design, installation, and maintenance manual, or alternative suppliers' components that are listed for use with the specific extinguishing system shall be used. The NFPA 17 design ensures that all required features (including detection, annunciation, automatic and manual actuation features) are incorporated into the vehicle FSS, and that they are designed and tested in accordance with the requirements for pre-engineered FSSs. NFPA 17 compliance also ensures that the system meets inspection, maintenance, and recharging requirements as specified in Chapter 11 of NFPA 17. These requirements ensure adequate design and reliability of the vehicle FSS. To ensure the FSS is reliable and will meet the required Safety Function upon demand, the WIPP Fire Protection Program (FPP) requires all components of the FSS to include the automatic credited features and non-credited (i.e., manual activation, and/or supplemental cooling system such as ICE) features to be maintained, inspected, and tested per the NFPA-17 and manufacturer requirements and recommendations. As all components of the FSS are tested, inspected, and maintained per NFPA-17 and the manufacturer's requirements, the WIPP FPP ensures the reliability of the automatic FSS to automatically detect a fire and discharge the suppressant to the fire area. As required by NFPA-17, the manual activation of the FSS will be maintained and tested as a non-credited but important safety feature of the FSS (i.e., subject to Key Element [KE] 10-2). All the tests and preventative maintenance requirements (e.g., daily pre-operational tests, weekly, monthly, quarterly, semiannual, annual, or less frequent inspections and maintenance) are captured by the WIPP FPP and implemented via approved procedures to ensure the system reliability is maintained at a high level. An example of the determination of the requirements for inspections and maintenance is shown in ETO-C-118, which is a gap analysis that determined the tests and maintenance that needed to be added to the WIPP procedures to ensure the Amerex System is maintained per the manufacturer's requirements. The WIPP FPP ensures that all components and systems on the FSS, regardless of whether they are credited in the DSA or are in a specific surveillance requirement of the TSR, are maintained per the NFPA and system manufacturer requirements to ensure system reliability for life safety and other factors not considered in the DSA nuclear safety analysis.

Functional Requirements	Performance Criteria	Performance Evaluation
		Ensuring the FSS is capable of performing reliably to meet other requirements (e.g., life safety), verifies that the FSS is highly reliable and capable of meeting the nuclear Safety Function. A leak independent of a collision would be expected to be small, to form under the vehicle(s) away from hot vehicle/equipment surfaces, if any, and to be slow to develop. While the automatic FSS would be available on vehicles/equipment within 200 feet of the CH Waste and will extinguish fires on the vehicle thereby reducing the probability of ignition of the combustible liquid pool, the FSS may not be totally effective in preventing or extinguishing a pool fire involving the vehicle(s). Although credited for pool fires resulting from leaks, a leak could initiate away from a heat source (e.g., engine) and form under the vehicle/equipment where the detection system could but may not readily sense the heat from a fire. If actuated, the discharge of the fire suppressant would be expected to significantly dampen, if not extinguish, the fire. Pool fires due to leaks are anticipated to slowly develop which allows for early detection of the leak thereby keeping the pool small. Vehicles/equipment operating in proximity to CH Waste are required to be pre-operationally inspected (Section 4.5.1), including signs of leakage, and they are required to be Attended (Section 4.5.3 and 4.5.5). The purpose of the Attendant is to be alert to indications of leakage and/or fires and to respond accordingly, thereby preventing pool fires that may originate away from vehicle/equipment heat sources.
Upon detection of a developing stage fire, the FSS shall automatically discharge a fire suppressant into the engine compartment and designated heat source locations to extinguish the fire.	Automatic actuation of the fire suppressant shall be designed and installed in accordance with NFPA 17, Chapter 9, “Requirements for pre-engineered systems.”	The UG Liquid-fueled vehicle/equipment FSSs meet the requirements of NFPA 17, and are fully FM and/or UL approved for a pre-engineered FSS. The NFPA requirements ensure that only system components referenced in the manufacturer’s design, installation, and maintenance manual or alternative suppliers’ components that are listed for use with the specific extinguishing system shall be used. The suppressant is routed through piping or tubing to the fire source and is dispersed through nozzles at the fire location. There are no operator replaceable components and the operator cannot change the system control parameters. A daily pre-operational check verifies the system is operable and capable of detecting a developing stage fire and initiating discharge of the dry powder suppressant to extinguish the fire. The operability of the FSS is demonstrated by the green “System OK” status light on the control panel. As required by NFPA-17, the ICE agent of the FSS will be maintained and tested as a non-credited function of the FSS. All the tests and preventative maintenance requirements (e.g., daily pre-operational tests, weekly, monthly, quarterly, semiannual, annual, or less frequent inspections and maintenance) are captured by the WIPP FPP and implemented via approved procedures to ensure the system reliability is maintained at a high level. The daily

Functional Requirements	Performance Criteria	Performance Evaluation
		functional test of the system status (on Amerex system, this is pushing the "Push to Test" button) will verify the Control Panel is receiving a signal indicating that the ICE is fully charged and the pressures are in the correct range. If the ICE is in an operable status, the Control Panel will illuminate the System OK green LED. If there is a problem with the ICE component, the Control Panel will not receive the correct signal and will illuminate the red LED indicating a problem and an inoperable FSS. The daily testing of the ICE component and testing during maintenance ensures that the ICE remains reliable and does not negatively impact the operability of the dry powder suppressant system. NFPA-17 gives the requirements for a dry chemical suppressant system only. It does not require supplemental systems (e.g., ICE).
Upon actuation of the extinguishing systems, the engine shall shut down automatically.	Automatic shutdown of vehicle fuel delivery system shall be designed and installed in accordance with NFPA 17, Chapter 9, "Requirements for pre-engineered systems."	The suppression system provides a signal that shuts down the active fuel supply and power to the fuel and hydraulic fluid pumps upon manual activation of the FSS or automatic detection of a fire. The diesel engine will be shut down by stopping the flow of fuel (i.e., shutdown the fuel pump). The NFPA requirements ensure that only system components referenced in the manufacturer's design, installation, and maintenance manual or alternative suppliers' components that are listed for use with the specific extinguishing system shall be used. The system maintenance and tests are completed by a technician trained, qualified, and certified by the system manufacturer.

On this basis, it has been determined that the UG vehicle/equipment FSSs are capable of performing their Safety Function.

4.4.2.5 Technical Safety Requirements (TSRs)

The following attributes of the automatic FSSs on UG vehicles/equipment required by the NFPA-122 hazard evaluation and selected for use in the Waste Shaft Station when CH Waste is present, in the VEZ, when transporting CH Waste between the VEZ and the Waste Face, and any other vehicles/equipment to be operated ≤ 200 feet of the CH Waste Face are required to be protected in the TSRs:

- The detection system shall detect developing stage fires associated with the engine compartment and/or fuel and hydraulic line leaks.
- Upon detection of a developing fire, the FSS shall discharge a fire suppressant into the engine compartment and designated heat source locations to extinguish the fire.
- Upon activation of the extinguishing systems, the engine shall shut down automatically.

4.4.3 Waste Handling Building Fire Suppression System

The WHB is equipped with a FSS which covers the CH Bay, Room 108, and Waste Hoist Tower. The WHB FSS is selected as a SS control.

4.4.3.1 Safety Function

The Safety Function of the WHB FSS is to prevent a small fire from becoming a large fire causing the release of radiological materials in the WHB by detecting fires and discharging water on the affected area, thereby reducing the likelihood of large fires.

4.4.3.2 System Description

The WHB is classified as a special purpose industrial occupancy structure per NFPA 101, *Life Safety Code®*. The hazard content of the facility is broken into two categories: 1) the entire facility, with the exception of the RH Hot Cell Complex, is considered an Ordinary Hazard and 2) the RH Hot Cell Complex that contains no transient combustible material and a minimal amount of combustible components. As such, the RH Hot Cell Complex is considered a Low Hazard since a fire in the area will not propagate (WIPP-023).

The WHB FSS (FP00) includes portions of the Water Distribution System (WD00), Fire Water Supply and Distribution System (FP01), and FSS (FP02). The WHB FSS includes the Fire Water Storage Tank (Fire Water Storage Tank (WD02), electric and diesel driven fire water pumps, distribution piping (from fire water tank to sprinkler heads), and Post Indicator Valves (PIVs) that are part of the Fire Water Supply and Distribution System. The boundary of the WHB FSS includes the supply risers and distribution piping with sprinklers that provide fire suppression capability to the WHB. Three risers, one in Room 108, one in the CH Bay, and one in the RH Bay, supply the WHB. The RH Bay riser and associated piping and sprinklers are not credited in the safety analysis.

The SS boundary of the WHB FSS includes:

- The Fire Water Storage Tank and all piping and components from the tank to the connection to the main loop.
- The main loop around the WHB. The SS piping is the piping before a PIV that connects to either the outer loop or a non-SS building supply (these PIVs are listed below and are not SS).
- All piping leading from the main loop to the sprinkler heads.
- Instrumentation used to monitor Fire Water Storage Tank level.

PIVs forming the SS boundary: V-001, PIV #3, PIV #22, V-002, PIV #5, PIV #6, V-003, PIV #9, PIV #12, V-008, PIV #13, PIV #31, V-009, PIV #33, PIV #15, PIV #21, V-010, PIV #39, PIV #17, V-011, V-012, V-013, V-014, and PIV #32.

The RH Bay riser and associated piping and sprinklers are not credited to perform a Safety Function and therefore are not part of the SS system boundary. Fire barriers within the WHB where not credited for preventing the propagation of fires within the CH Bay and/or Room 108.

The WHB is equipped with three wet-pipe sprinkler systems. These sprinkler systems are supplied from 6-inch mains, which are connected to the 10-inch fire water loop distribution system that are located south, north, east, and west of the WHB. PIVs are supplied for system isolation. An interior aboveground water supply connects the water supply of Room 108 to the water supply of the CH Bay riser. This 6-inch line with isolation valves provides redundant water supply to the WHB systems and provides an additional water supply loop segment. Each riser is equipped with a riser isolation valve. The systems are

designed as Ordinary Hazard Group 1 and Group 2 per NFPA 13, *Standard for the Installation of Sprinkler Systems*.

The domestic and fire suppression water supply for the WIPP site is through a subsurface water pipeline system from the City of Carlsbad (Carlsbad Municipal Water System). The water system at the WIPP is used to fill and replenish the Fire Water Storage Tank. The agreement with the City of Carlsbad is effective for 100 years from June 15, 2009 and is for uninterrupted water service.

The fire water supply and distribution system consists of a water tank, two fire pumps, a pressure maintenance jockey pump, and a loop yard piping distribution system. The system installation is in accordance with the appropriate editions of the NFPA 20, *Standard for the Installation of Stationary Pumps for Fire Protection*, NFPA 22, *Standard for Water Tanks for Private Fire Protection*, and NFPA 24, *Standard for Water Tanks for Private Fire Service Mains and Their Appurtenances*.

The fire water supply system receives its normal water supply from an onsite nominal 180,000-gallon aboveground Fire Water Storage Tank. The tank must supply at least 72,180 gallons of firefighting water to the WHB. This tank is configured to supply the fire pumps in parallel, flowing water into a common supply header shared by both fire pumps. The fire pumps are configured to start on demand via a drop in pressure from the fire water main. This drop in pressure may be activated by either the opening of a fire hydrant or by the activation of a sprinkler system. The initial fire pump is the electric-motor-driven pump and the other pump is diesel-engine driven. Each pump is tested to verify it can deliver greater than or equal to 490 gpm at greater than or equal to 120 psig at the most demanding riser (Room 108 which supplies the Waste Hoist Tower sprinklers) to meet maximum sprinkler demand as confirmed per *Fire Pump Discharge Required to Operate WHB 5th Floor Sprinkler System* (ETO-Z-229, Rev. 1).

The WHB FSS is described in Chapter 2.0, Section 2.8.2 of this DSA, while the design parameters for the WHB are described in *Fire Protections System, System Design Description* (SDD-FP00).

Boundaries and Interfaces

The WHB FSS interfaces with potential to affect the Safety Function include the following:

WHB Structure: The system boundary is at each of the fasteners, supports, and mountings that connect the WHB FSS components to the WHB structure. The fasteners, supports, and mountings are part of the WHB FSS.

RH Bay: The wall separating the CH and RH Bays is 1-foot-thick concrete from the floor up to a height of about 10 feet, (WIPP-014, *Fire Exposure Modeling for the WIPP Waste Handling Building*). As such, it would effectively block radiant heat flux from any fire on the RH side from reaching CH waste containers. The only place where this wall does not exist is at the roll-up door adjacent to the Shielded Storage Room. The man-lift is used on an infrequent basis to gain access to equipment near the ceiling of the RH Bay. The man-lift is the only liquid-fueled vehicle that may be normally positioned at the roll-up door. If a man-lift fire were to occur near the roll-up door, any burning fuel that did migrate under the door would not expose the CH drums to direct flame impingement due to the facility pallets.

TRUPACT Maintenance Facility: The TMF (Bldg. 412) shares its east wall with the west wall of the WHB CH Bay and a portion of its north wall with a portion of the south wall of Room 108. The TMF contains an automatic sprinkler system that is fed from the system that supplies the CH Bay. The TMF also contains a small, enclosed office area that has a sprinkler system within the structure. A two-hour fire-rated wall is the interface between the WHB and the north wall of the TMF. Propagation to the CH Bay or Room 108 would require a very severe fire that breaches either the fire-resistive interior walls

(designed to be fire rated) or the heavy steel ductwork communicating with each of the rooms. Fires propagating from the TMF into the CH Bay or into Room 108 would be suppressed by the credited CH Bay FSS. Subsequent ignition of combustible material, especially of a vehicle, is considered a very remote possibility.

Support Building: The Support Building is located directly north of the CH portion of the WHB and is separated by approximately 12 feet. The Support Building is a two-story structure (28 feet high) and is rated as noncombustible construction. The portion of the WHB in this area is a two-story structure (44 feet high) with approximately 180 feet of its width exposed by the Support Building. Section 5.6.3 of *Recommended Practice for Protection of Buildings from Exterior Fire Exposures* (NFPA 80A) states that no exposure should be considered to exist if only the exposing building is protected throughout with an automatic sprinkler system. Both of the facilities are fully sprinkler-protected. Therefore, with the WHB sprinkler system in service, the buildings are adequately separated and a technical basis for non-propagation from the Support Building to the WHB is established.

4.4.3.3 Functional Requirements

Table 4.4.3-1 restates the Safety Function and identifies its corresponding minimum functional requirements necessary to perform the stated Safety Function.

Table 4.4.3-1. Functional Requirements for Waste Handling Building Fire Suppression System

Safety Function	Functional Requirements
To prevent a small fire from becoming a large fire causing the release of radiological materials in the WHB by detecting fires and discharging water on the affected area, thereby reducing the likelihood of large fires.	Automatically actuate and provide fire suppression to the CH Bay, Room 108, and the Waste Hoist Tower sufficient to prevent fire propagation that could cause the release of radiological material.

4.4.3.4 System Evaluation

This subsection provides the performance criteria for WHB FSS that characterizes the capabilities necessary to meet the functional requirements listed in Table 4.4.3-1 and evaluates its capability to meet these performance criteria. The performance criteria and associated evaluations are provided in Table 4.4.3-2.

As part of the systems evaluation for the Fire Water Storage Tank level indicators, a Design Adequacy Assessment was performed that identified potential failure vulnerability issues associated with the instrument loops used for monitoring the Fire Water Storage Tank level. A Backfit Analysis was performed for the affected instrument loop in accordance with the *WIPP Backfit Analysis Process* (WP 09-CN.04) that identified system vulnerabilities and proposed system design changes to address them. As a result of the identified system vulnerabilities compensatory measures have been implemented until system design modifications are made.

The compensatory measures provide for the use of a SS water level local gauge that is independent of the signal transmitted to the Programmable Logic Controller (PLC) used to report Fire Water Storage Tank level values to the Central Monitoring Room (CMR). This local gauge will be monitored per specified TSR Surveillance Requirements at intervals that provide adequate assurance that the WHB FSS remains Operable and capable of performing its required Safety Function when required.

The Fire Water Storage Tank water level history demonstrates that it is stable with only gradual changes, well trended variations over time. As such, conduct of the surveillances at the specified intervals using the

fully qualified SS local indicator (redundant to the CMR indicator) adequately compensates for any potential loss of the CMR reporting functions if this were to occur. The Fire Water Storage Tank level indicators instrument loop reporting function to the CMR will remain in place and is expected to provide real time CMR indications of Fire Water Storage Tank level. Should the CMR reporting function fail, the Fire Water Storage Tank level would remain at an operable level and continue to perform is Safety Function. The failure of the CMR reporting function does not initiate an accident or influence the progression of an accident.

In summary, the Fire Water Storage Tank level instrument loop CMR reporting function will be supplemented with a SS local Fire Water Storage Tank level indicator. These compensatory measures are noted in the WHB FSS Performance Evaluations that follows.

Table 4.4.3-2. Performance Criteria and Performance Evaluation for Waste Handling Building Fire Suppression System

Functional Requirements	Performance Criteria	Performance Evaluation
Automatically actuate and provide fire suppression to the CH Bay, Room 108, and the Waste Hoist Tower sufficient to prevent fire propagation that could cause the release of radiological material.	The WHB FSS shall be designed and installed in accordance with NFPA 13.	The design and installation of the WHB FSS was performed in compliance with NFPA 13, which serves as the code of record for this system. Compliance with NFPA 13 ensures that the system has the appropriate discharge density, sufficient water supply, and appropriate sprinkler spatial layout necessary to fulfill its Safety Function. Design review and pre-operational testing demonstrates that the WHB FSS is designed and installed in accordance with NFPA 13 (documented in the current revision of WIPP-023). On this basis, the WHB FSS will perform its Safety Function. One exception to NFPA 13 compliance is pumping capability as discussed in the fire water pumping capability below.
	Flow path is unobstructed from the fire water supply to the two credited WHB risers.	The flow path from the water supply to the two credited WHB risers is unobstructed provided that riser control valves and PIVs in the flow path to the riser are in the proper position. There are no valves from the risers to the sprinkler heads to obstruct flow. Valve alignment is manually set and verified in accordance with NFPA 25, *Standard for the Inspection, Testing, and Maintenance of Water Based Fire Protection Systems*. ETO-Z-229, Rev. 1, analyzed the potential flow paths and determined that the hydraulic requirements of the WHB FSS can be satisfied using any available flow path identified in the calculation.
	Fire water pumping capability of 490 gpm at greater than or equal to 120 psig to the most demanding riser (Room 108) in the WHB.	Fire water supply capability of 490 gpm at ≥ 120 psig to the most demanding riser (Room 108) in the WHB. The fifth floor of the Waste Hoist Tower which is fed by the Room 108 riser represents the most demanding design area for fire suppression. The 490 gpm provides the design density suppression at each fifth floor sprinkler head (ETO-Z-229, Rev. 1). This required capability is determined without firefighting hose usage as fire fighter response is not a credited part of the performance criteria (per Chapter 3.0 of this DSA) and therefore the diesel pump meets the required pumping capability to perform the credited Safety Function. The pump does not, however, meet the NFPA 13 (1983 code of record) requirement that includes firefighting hose usage of 250 gpm (ETO-Z-229, Rev. 1). Impairments associated with NFPA 13 are addressed by the WIPP FPP. To meet the Safety Function, all Waste Handling Building hose stations are disabled and no longer used. The system is vulnerable to meeting this demand during performance of hydrant testing and the system would not be operable during these periods. To address vulnerabilities associated with the FSS, Section 3.6 identifies

Functional Requirements	Performance Criteria	Performance Evaluation
		commitments for further investigation of the hydrant vulnerabilities and associated system or operational improvements, as well as planned upgrades to the fire water supply and distribution system to meet the latest fire code design requirements. Per ETO-Z-277 (Rev. 0), *Electric Fire Pump Operability*, the electric pump is capable of meeting the credited Safety Function. Only one pump must meet the requirement of 490 gpm at greater than or equal to 120 psig to the most demanding riser to perform the credited Safety Function. However, the FSS design of installing two pumps capable of meeting the demand provides redundancy and additional reliability to the system. Therefore, this configuration is included as a TSR attribute. The diesel-driven pump must have enough diesel fuel to run for at least 90 minutes. This translates to a fuel level in the existing tank of greater than 12 inches per ETO-Z-230, Rev.2. The electric-motor-driven pump must also run for at least 90 minutes. Because there is no common failure that would cause a fire in the WHB and simultaneously disrupt electric power to the electric-motor-driven pump, the electric power is not required to be SS. This is due to the physical separation of the WHB and the fire pump house where the electric-motor-driven pump is located. For a fire event occurring at the CH/RH Bay Roll-up door, the WHB FSS is credited for prevention. Successful performance of the FSS will limit the size of the pool fire and prevent involvement of CH Waste containers. WIPP-058 examined multiple fuel pool fire scenarios at the roll-up door between the CH and RH Bays. A 40-gallon fuel spill with fire having a center point at the roll-up door was determined to actuate both the CH and RH Bay sprinkler systems. However, the roll-up door is normally closed during CH Waste Handling operations, liquid fueled vehicles are prohibited from the CH Bay when CH Waste is present (Section 4.5.4), and there is infrequent use of liquid-fueled vehicles/ equipment (e.g., man-lift) in the vicinity of the roll-up door. For the more likely scenarios, simultaneous actuation of both sprinkler systems is not anticipated and therefore, the CH Bay riser would be capable of performing its credited safety function. Additionally, due to the potential degradation of the WHB structure by a metered spill and fire (Section 4.1.1), vehicles/equipment in the RH Bay having ≥ 25 gallons (Section 4.5.13) liquid-combustible capacity are required to be attended. This vehicle/equipment attendance would further reduce the likelihood of this scenario. WIPP-023 identifies that there is insufficient liquid fuel available on the Waste Hoist Tower 5th floor to compromise the Waste Hoist Support Structure located below the 5th floor. WIPP-058 also evaluated unprotected structural steel columns in the Waste Hoist Tower and concluded that they will survive evaluated fire exposures. In addition, all applicable NFPA requirements are required to be met under the WIPP FPP (Chapter 11.0 of this DSA) which is a required Safety Management Program in Section 5 of the TSR.
	Fire pump auto-start capability with a set point greater than or equal to 125 psig.	The electric-motor-driven pump and the diesel-engine driven pump each have an auto-start capability based on pressure drop in the FSS. This auto-start feature is verified through periodic testing. The set-points for the individual pump auto-start pressure switches are calculated in ETO-Z-230, Rev. 2, and set at greater than or equal to 125 psig in accordance with NFPA 20 to minimize pressure excursions. For the diesel-engine driven pump, this auto-start test also serves as a

Functional Requirements	Performance Criteria	Performance Evaluation
		functional test of the components required to start the diesel engine (e.g., starting batteries and circuitry, condition and usability of the diesel fuel, etc.). This automatic start test is performed to verify that one fire pump automatically starts before system pressure decreases below the set point of greater than or equal to 125 psig (ETO-Z-230, Rev. 1) and runs for the prescribed run time per NFPA 20 code of record (7 minutes for the electric pump, 30 minutes for the diesel pump). The system pressure at which the pump starts, and pump parameters during the run time, are recorded to complete the surveillance. During the pump run, observations are made periodically and adjustments are conducted per NFPA 25 and any abnormalities are recorded. This ensures that any pump maintenance issues are detected and provides assurance that the pump can run for 90 minutes if required. In addition, all applicable NFPA requirements are required to be met under the WIPP FPP (Chapter 11.0 of this DSA), which is a required Safety Management Program in Section 5 of the TSR.
	Greater than or equal to 72,180 gallons of fire water available.	The Fire Water Storage Tank 25-D-001A has a capacity of 180,000 gallons and is maintained at a nominal 105,000 gallons or greater. A capacity of 72,180 gallons (WIPP-023, Rev. 7) ensures that the required flow rate can be supplied for 90 minutes, thereby assuring adequate water supply for the WHB sprinkler design area with the bounding flow rate requirements per the requirements of NFPA 13 and the code of record. The water supply from the city feeds into the top of the Fire Water Storage Tank through a backflow preventer. The piping connection between the Fire Water Storage Tank and the Domestic Water Supply Tank piping is air gapped and capped near the outlet of the Domestic Water Supply Tank and inlet to the pumps. With these features, the fire water supply is protected from negative impacts of the domestic water supply.

On this basis, it has been determined that the WHB FSS is capable of performing its Safety Function.

4.4.3.5 Technical Safety Requirements (TSRs)

The following specific attributes of the WHB FSS are required to be protected in the TSRs:

- One unobstructed flow path from Fire Water Storage Tank 25-D-001A to the applicable Process Area sprinklers.
- Two fire pumps (45-G-601 and 45-G-602) each with a capability to deliver ≥ 490 gpm to the Room 108 riser at ≥ 120 psig.
- Fire pump auto-start capability at a set point ≥ 125 psig.
- Greater than or equal to 72,180 gallons of fire water available in Fire Water Storage Tank 25 D-001A.
- Level indication for Fire Water Storage Tank loop 25F00601 (Level transmitter, 456-LT-006-001, CMR indicator, AK0601, and Local indicator, 456-LI-006-001).

4.4.4 Facility Pallet

CH Waste is transported to the UG on Facility Pallets. Facility Pallets are large steel pallets on which up to 4 waste assemblies can be placed for transport to the Disposal Room in the UG. The Facility Pallet is selected as a SS control.

4.4.4.1 Safety Function

The Safety Function of the Facility Pallet is to prevent direct flame impingement on CH Waste Containers in a pool fire to mitigate a release of radiological material.

4.4.4.2 System Description

In accordance with DOE-STD-5506-2007, the response of CH Waste Containers varies depending on the heat transfer mechanism, direct flame impingement, or radiative. DOE-STD-5506-2007 states:

> The response of metal containers to fire depends on whether the heat transfer is through direct flame impingement or only through radiation. Lid loss can occur only if specific conditions are met (e.g., a “fast” fire growth rate, direct flame impingement, etc.). Engulfing fires are those fires in which burning liquid fuel (including melted drum liners) passes beneath the container (e.g., on a pallet) or surrounds it. These fires can cause lid loss to a fraction of the engulfed drums, which may expel a portion of the contents. From the fire testing experience described in Appendix C, not all unrestrained drums engulfed in a pool fire experienced lid loss.

The Facility Pallet provides a barrier between the CH Waste Containers and a burning pool that prevents flame impingement and reduces the potential for lid ejection. Without lid ejection, the CH Waste burns as confined material which has a lower airborne release fraction (ARF) than unconfined burning of materials.

Facility Pallets (Chapter 2.0, Figure 2.6-23) are noncombustible, fabricated ASTM A240, Type 304 steel units approximately 13 feet long and 9 feet wide that weigh approximately 4,200 pounds. Both the upper and lower surfaces of a Facility Pallet are essentially solid surfaces that prevent direct flame impingement on containers being supported by the pallet due to a pool fire underneath the pallet. There are penetrations (8 total) through the surfaces to allow for securing Waste Assemblies to the pallet; however, they are small in diameter and are located such that direct flame impingement on TRU Waste Containers would not occur. Facility Pallets are designed to accommodate the transport of CH Waste assemblies such as drums, Standard Waste Boxes (SWBs), shielded containers, 10-Drum Overpacks (TDOPs), and/or Standard Large Boxes 2 (SLB2s) to the UG. Facility Pallets have a rated load of 25,000 pounds. Forklift pockets in the long side of the Facility Pallet allow for lifting the facility pallet. Holding bars are built into the pallet and are used to tie down CH Waste assemblies.

The Facility Pallets are described in Chapter 2.0, Section 2.6.3.

Boundaries and Interfaces

A Facility Pallet does not rely on any other SSC to perform its Safety Function.

4.4.4.3 Functional Requirement

Table 4.4.4-1 restates the Safety Function and identifies its corresponding minimum functional requirements necessary to perform the stated Safety Function.

Table 4.4.4-1. Functional Requirements for Facility Pallets

Safety Function	Functional Requirements
To prevent direct flame impingement on CH Waste Containers in a pool fire to mitigate a release of radiological material.	Shield CH Waste Containers from direct flame impingement by the “fast” fire growth of a pool fire underneath the pallet.

4.4.4.4 System Evaluation

This subsection provides the performance criteria for the Facility Pallets that characterize the capabilities necessary to meet the functional requirements listed in Table 4.4.4-1 and evaluates the capability to meet these performance criteria. The performance criteria and associated performance evaluations are provided in Table 4.4.4-2.

Table 4.4.4-2. Performance Criteria and Performance Evaluation for the Facility Pallets

Functional Requirements	Performance Criteria	Performance Evaluation
Shield CH Waste Containers from direct flame impingement by the “fast” fire growth of a pool fire underneath the pallet.	Facility Pallets shall be constructed of ASTM A240, Type 304 steel in a manner such that the pallet (1) has no through hole penetrations that would allow direct flame contact with the container surfaces; and (2) will support the weight of the CH Waste Container load in a pool fire.	DOE-STD-5506-2007 states: “The response of metal containers to fire depends on whether the heat transfer is through direct flame impingement or only through radiation. Lid loss can occur only if specific conditions are met (e.g., a “fast” fire growth rate, direct flame impingement, etc.). Engulfing fires are those fires in which burning liquid fuel (including melted drum liners) passes beneath the container (e.g., on a pallet) or surrounds it. These fires can cause lid loss to a fraction of the engulfed drums, which may expel a portion of the contents. From the fire testing experience described in Appendix C, not all unrestrained drums engulfed in a pool fire experienced lid loss.” WIPP metal facility pallets are shown on Drawing 41-D-011-W1 and are constructed of carbon steel with ASTM A240, *Standard Specification for Chromium and Chromium-Nickel Stainless Steel Plate, Sheet, and Strip for Pressure Vessels and for General Applications*, Type 304 stainless steel exterior surfaces with compatible fasteners and weld material. The pallet is approximately 13 feet long and 9 feet wide and approximately 9 inches thick. Except for 8 three-inch diameter hold down holes, the pallet is closed over the top and bottom surfaces. These hold down holes are located away from the pallet edge and away from waste package locations on top of the pallet. This steel facility pallet on a flat surface would obstruct development of the flame structure and entrainment of combustion air in the pallet area. Since DOE-STD-5506-2007 and referenced material require the pool to burn up in about 70 seconds, construction of the pallet becomes irrelevant. According to the Society of Fire Protection Engineers handbook data on fuel spills, a flat concrete surface will have an

Functional Requirements	Performance Criteria	Performance Evaluation
		even shallower depth than DOE-STD-5506 specifies. For longer duration fires (i.e., deeper pool depth), a steel Facility Pallet is not constructed of combustible materials and will not ignite upon contact with the pool fire front. ASTM A240 Type 403 steel melts at temperatures of 2550-2650 ^{0}F and has a useful service temperature rating of 1500 ^{0}F for cyclical thermal loading without appreciable scaling. The Type 304 steel is typically heat treated after welding in the range of 1900-2050 ^{0}F. In addition to surviving a floor based pool fire, the metal facility pallet will also survive expected pool fires when suspended over an opening underneath the pallet. The pallet has a solid metal bottom except for the eight hold down holes. An event such as a pool fire under a small portion of the pallet, such as exists when on the UG transporter trailer, will not compromise the structural integrity of the pallet. The survivability of a Facility Pallet in a pool fire is addressed in WIPP-058 along with the conclusion that, “metal Facility Pallets provide protection for stored waste drums from direct flame impingement and structural support of Waste Containers during any floor based hydrocarbon pool fire.” WIPP-058 determined that Facility Pallets provide sufficient shielding to assure that no drum can be exposed to a heat flux above 40 kW/m^2 assuring no waste container damage except for lid seal leaking and no heat exposure sufficient to cause lid loss on the end side of the pallet.

On this basis, the use of steel Facility Pallets that provide protection of stored waste drums from direct flame impingement due to a floor based pool fire is capable of performing its Safety Function.

4.4.4.5 Technical Safety Requirements (TSRs)

The following specific attribute of the Facility Pallets is required to be protected in the TSRs:

- Facility Pallets shall provide a stainless steel surface, excluding 8 tie-down penetrations that provide a contiguous flame barrier preventing direct flame impingement on the bottom of the CH Waste Containers, and has a robust construction.

4.4.5 Underground Ventilation Filtration System/Interim Ventilation System

The Underground Ventilation System (UVS) exhaust fans draw air from the UG, which is replaced by air being drawn in through the Air Intake Shaft, Salt Handling Shaft, and Waste Shaft intakes. These fans draw the UG air through HEPA filters prior to exhausting the air to the environment. The UVS includes the UVFS and IVS. The UVFS consists of HEPA filtration units in front of each exhaust fan. The IVS provides additional exhaust capacity to the UVS by adding two surface fans, with HEPA filtration units. In addition, the UVS reduces radiological exposures to workers at the Waste Face by controlling the direction of the airflow in the active Disposal Room. The UVS is selected as a SS control.

4.4.5.1 Safety Function

The Safety Function of the UVS is to mitigate the consequences of radiological material releases from internal container fires or deflagrations/overpressurizations, fire involving ordinary combustible

materials, fires associated with fuel leaks near the Waste Face (limited in size due to other preventive controls), and loss of confinement to acceptable levels by (1) filtering UG exhaust air prior to its release to the environment; and (2) providing directional airflow toward the Waste Face and away from workers in an active Disposal Room.

4.4.5.2 System Description

The UVS provides the equipment, controls and monitoring necessary to: (1) ensure that a suitable UG air environment is provided for personnel and equipment; (2) confine and channel airborne hazardous material (HAZMAT) resulting from an UG fire or breach of TRU Waste Containers; (3) directing airflow away from workers at the Waste Face, and (4) provide HEPA filtration of the exhaust air to minimize radiation dose to site personnel and the public should a release occur. The UVFS and IVS are subsystems of the UVS which provide the HEPA filtration function for the UVS.

The Supplemental Ventilation System (SVS) provides airflow to the North and Construction circuits of the UG. The SVS consists of an UG fan located near the base of the Air Intake Shaft. In this configuration, the Air Intake Shaft and Waste Shafts provide air to the UG while the Salt Handling Shaft exhausts air from the North and Construction circuits and the Exhaust Shaft exhausts air from the Disposal and Waste Shaft circuits. The SVS is designed to provide flow to the “clean” side of the facility. The SVS is an interfacing system but it is not part of the UVS.

Underground Ventilation System Operation without Supplemental Ventilation System

Air to the UG horizon is provided through three shafts that are exhausted through a single shaft by exhaust fans located on the surface. The air drawn down the Air Intake Shaft and the Salt Handling Shaft is split into three separate air streams serving the construction, north area and TRU Waste disposal areas. The air drawn down the Waste Shaft serves the Waste Shaft Station operation and is exhausted directly to the Exhaust Shaft where it joins the exhaust streams of the other three areas. The combined exhaust streams are drawn up the Exhaust Shaft, and discharged via the HEPA filtration system.

Underground Ventilation System Operation with Supplemental Ventilation System

Air to the UG horizon is normally provided through three shafts that are exhausted through a single shaft by exhaust fans located on the surface. The air drawn down the Air Intake Shaft and the Salt Handling Shaft (when SVS is not operating) is split into four separate air streams serving the construction, north area, the Waste Shaft Station, and TRU Waste disposal area. During waste emplacement operations, the air drawn down the Waste Shaft serves the Waste Shaft Station operation and is exhausted directly to the Exhaust Shaft where it joins the exhaust streams of the other three areas. The combined exhaust streams are drawn up the Exhaust Shaft, through HEPA filtration systems, and then discharged to the environment.

The SVS draws intake air UG via the Air Intake Shaft and exhausts a nominal 40,000 to 70,000 acfm through the Salt Handling Shaft. The SVS also provides intake airflow to the disposal circuit. The SVS fan pressurizes the intake upstream of the UG waste disposal areas, and therefore clean air that does not require filtration prior to exhaust, upcasts the Salt Handling Shaft to the atmosphere. The UVS has the capacity to maintain flow through the UG waste disposal and Waste Shaft areas and to the surface HEPA filters and fans.

Pressure differentials are maintained between flow paths to assure that air leakage is always from areas of lower to higher contamination potential. The pressure differential maintained between the construction circuit and the waste disposal circuit ensures that air is channeled toward the disposal circuit to the exhaust

drift and through the HEPA filters. The pressure differential is produced by the surface exhaust fans and the forcing SVS fan in conjunction with the UG bulkheads and air regulators. Pressure differentials across selected bulkheads between ventilation circuits are monitored from the Central Monitoring Room (CMR) and can be monitored locally.

The UVS is required to maintain a pressure differential between the UG Waste Handling Areas and the non-Waste Handling Areas such that airflow is always toward the Waste Handling Areas. The Waste Handling Areas always have the lesser pressure. For Waste Handling considerations, the differential pressure is measured across Bulkhead 308 in S-400 at E-300, and Bulkhead 309 in S-400 at W-30.

The UVS operates only in the Filtration Mode. The UVFS provides this HEPA filtration function. The UVFS is composed of the following equipment:

- Three centrifugal exhaust fans each capable of operating at nominal 60,000 acfm.
- Two identical HEPA filtration units arranged in parallel.
- Isolation dampers and associated ductwork.

The IVS can be used to supplement or backup the UVFS to supply air to the UG and to filter air being exhausted from the UG. The IVS consists of the following equipment:

- Two skid mounted centrifugal exhaust fans.
- Two skid mounted filter banks.
- Isolation dampers and associated ductwork.

The normal function of the IVS is to increase the airflow through the Exhaust Shaft. Each IVS 960 fan can provide a nominal filtered flow of 27,000 acfm (or 54,000 acfm combined). The IVS 960 fans are located on the surface near the UG ventilation system exhaust fans and the Exhaust Shaft.

The UVFS (with one 860 exhaust fan) and IVS (with two 960 exhaust fans) can be operated at the same time to achieve 114,000 acfm that is routed through HEPA filter units prior to exhaust to the environment.

The 860 and 960 exhaust fans are located on the surface near the Exhaust Shaft adjacent to the Exhaust Filter Building (EFB). During filtration operations, one of three 860 fans operates, with one, two, or no IVS fans operating or the 960 fans may be operated with no 860 fan in operation. Normal operations would be with one 860 and both 960 fans in operation.

Each UVFS and IVS filter train has pre-filters and two banks of HEPA filters. Fan operating status and the differential pressure across each HEPA filter bank indications can be monitored locally and in the CMR. High differential pressure across the HEPA filter banks or loss of ventilation airflow initiates an alarm in the CMR.

The UVS is described in Chapter 2.0, Section 2.7.3.7, of this DSA, while the design parameters are described in *Underground Ventilation System Design Description* (SDD) (SDD-VU00).

Boundaries and Interfaces

The UVFS/IVS boundaries are the physical boundaries of the ventilation system including the UVFS/IVS fans, HEPA filters, ductwork, and corresponding enclosures and support structures. The UVFS/IVS ductwork downstream of the UVFS/IVS exhaust fans does not serve a SS function.

The UVFS/IVS interfaces with potential to affect the Safety Function include the following:

- **Electrical Distribution System**: The electrical distribution system is required for operation of the UVS fans; however, it is not part of the SS boundary as the accidents for which the UVS is credited do not involve a concurrent loss of the electrical distribution system.
- **Supplemental Ventilation System**: The design of the SVS components and configuration in the UG, in accordance with analyzed alignments, precludes unfiltered exhaust flow from the UG Disposal Areas.

The WIPP *Underground Ventilation System Design Description* (SDD-VU00) describes the functions and services of the identified primary and secondary system interfaces for the UVS.

4.4.5.3 Functional Requirements

Table 4.4.5-1 restates the Safety Function and identifies the corresponding minimum functional requirements necessary to perform the stated Safety Functions.

Table 4.4.5-1. Functional Requirements for Underground Ventilation Filtration System and Interim Ventilation System

Safety Function	Functional Requirements
To mitigate the consequences of radiological material releases internal container fires or deflagrations/ overpressurizations, fires involving ordinary combustible materials, fires associated with fuel leaks near the Waste Face (limited in size due to other preventive controls), and loss of confinement to acceptable levels by (1) filtering UG exhaust air prior to its release to the environment; and (2) providing directional airflow toward the Waste Face and away from workers in an active Disposal Room.	The UVFS/IVS HEPA filters shall reduce radioactive dose to the collocated worker to < 25 rem.
	The UVFS/IVS shall ensure that all flow from the Disposal Air circuit is filtered prior to release to the environment.
	During downloading of Waste Containers with the Waste Shaft Conveyance, the UVFS/IVS shall ensure that airflow from the Waste Shaft Station is filtered prior to release to the environment.
	The UVFS/IVS shall draw air away from workers at the Waste Face.

4.4.5.4 System Evaluation

This subsection provides the performance criteria for the UVFS/IVS that characterize the capabilities necessary to meet the functional requirements listed in Table 4.4.5-1 and evaluates the capability to meet these performance criteria. The performance criteria and associated performance evaluations are provided in Table 4.4.5-2.

To support the systems evaluation, Design Adequacy Assessments were performed as part of the following backfit analyses related to the UVFS/IVS:

- *Backfit Analysis-308 Bulkhead DP*, 09-BF1000, Rev. 1
- *Backfit Analysis-309 Bulkhead Differential Pressure*, 09-BF1001, Rev. 1
- *Backfit Analysis-Central Monitoring System*, 09-BF1003, Rev. 1
- *Backfit Analysis-Underground Ventilation System-Interim Ventilation System*, 09-BF1005, Rev. 1
- *Backfit Analysis-UVS HEPA Filter DP Transmitters*, 09-BF1006, Rev. 1

The design adequacy assessments were performed against nuclear safety design criteria established in DOE Order 420.1C, including the applicable nuclear safety design criteria for confinement ventilation systems in DOE Guide 420.1A, *Nonreactor Nuclear Safety Design Guide*. The scope of the review included the environmental qualification, functionality, reliability, testing, and maintainability of safety significant components. While the conclusions from backfit analyses were that the UVS and IVS were capable of meeting the required safety functions, the UVFS and IVS do not meet the design criteria related to backup power. Only the UVFS has connections to a diesel generator to receive backup power following loss of offsite power. IVS does not have this capability. However, these limitations are judged to be acceptable because the DSA does not identify a need for backup power within a certain period of time to meet the required safety functions.

The UVFS/IVS backfit analysis identified a number of vulnerabilities that affect system reliability. These include issues such as degradation in the UVFS ductwork due to corrosion, susceptibility of IVS ductwork to corrosion and stress cracking, single points of failure for the UVFS damper and fan control panel, degradation of the 860 fan transformers and control breakers, and salt buildup in the exhaust duct. Enhanced monitoring and inspections of the UVFS/IVS conditions are necessary in order to ensure timely engineering evaluation, preventive and corrective maintenance and minimization of impacts on the safety function. This is considered to be within the scope of the corresponding key element of the Initial Testing, In Service Surveillance and Maintenance Program. The noted deficiencies with the UVFS/IVS will ultimately be addressed with a project to install permanent upgrades to the system, as described in Chapter 3.0, Section 3.6, of this DSA. Until such time, the system is determined to be sufficient for its limited life with enhanced monitoring and inspections. Successful reliance on the UVFS over the past two years and the fact that the IVS affords a backup capability to achieve the safety function contribute to this judgment.

Vulnerabilities were also identified with the instrument loops used for monitoring the UVFS/IVS differential pressures across the HEPA filter banks and for monitoring the differential pressures across the 308 and 309 Bulkheads. A Backfit Analysis was performed for each of the affected instrument loops in accordance with the *WIPP Backfit Analysis Process* (WP 09-CN.04) that identified system vulnerabilities and proposed system design changes to address them. As a result of the identified system vulnerabilities compensatory measures have been implemented until system design modifications are made.

The compensatory measures provide for the use of SS pressure differential transmitter local gauges that are independent of the instrument loops used to report differential pressure values to the Central Monitoring Room (CMR). The design adequacy of the gauges is evaluated in the backfit analyses for the differential pressure (DP) gauges as identified above. These local gauges will be monitored per specified TSR Surveillance Requirements at intervals that provide adequate assurance that the UVFS/IVS remains Operable and capable of performing its required Safety Function when required.

The UVFS history of use demonstrates that it continuously operates in a stable condition with only gradual, well-trended variations over time. Similar performance is expected for the IVS. As such, conduct of the TSR surveillances at the specified intervals by utilizing the redundant fully qualified SS local gauge indications adequately compensates for loss of the CMR reporting functions if this were to occur. The differential pressure instrument loop reporting function to the CMR will remain in place and is expected to provide real time CMR indications and alarm of developing conditions should they occur. Should the CMR reporting function fail, the UVFS/IVS would remain operable and continue to perform its Safety Function. The failure of the CMR reporting function does not initiate an accident or influence the progression of an accident.

In summary, the differential pressure instrument loop CMR reporting function will be supplemented with surveillances using the pressure differential transmitter local gauges. These compensatory measures are noted in the UVFS/IVS Performance Evaluations that follow.

Table 4.4.5-2. Performance Criteria and Performance Evaluation for the Underground Ventilation System and Interim Ventilation System

Functional Requirements	Performance Criteria	Performance Evaluation
The UVFS/IVS HEPA filters shall reduce radioactive dose to the collocated worker to < 25 rem.	The UVFS/IVS HEPA filtration shall provide filtration efficiency of ≥ 99 percent when challenged with poly-dispersed aerosol particles with a diameter of 0.3–0.7 microns aerodynamic equivalent diameter.	Exhaust flow passes through at least one HEPA filtration unit before discharging to the environment. Efficiency test of each UVFS and IVS HEPA filter unit in accordance with ASME N510, *Testing of Nuclear Air-Treatment Systems*. A system assessment of the UVFS was conducted in response to the Defense Nuclear Facilities Safety Board (DNFSB) Recommendation 2004-2. The assessment was performed in accordance with the process and criteria outlined in *DOE Ventilation System Evaluation Guidance for Safety-Related and Non- Safety-Related System* (DNFSB 2004-2, Ventilation System Evaluation Guide). The review concluded, "… that the WIPP ventilation systems were appropriately evaluated against SS criteria associated with the established DNFSB 2004-2 evaluation guidelines and adequately met them." The IVS was designed to provide a confinement ventilation system function meeting DOE Order 420.1C. Its adequacy is addressed as part of the design system assessment described in *Backfit Analysis – Underground Ventilation System – Interim Ventilation System*, 09-BF1005, Rev. 1.
	Differential pressure across HEPA filter banks of ≤ +4.0 inches w.g. and ≥ +0.20 inches w.g.	The maximum differential pressure allowed for the HEPA filter banks assures that the HEPA filter banks maintain the assumed pre-accident filter capability and that the HEPA filter unit banks are not clogged. Establishing a maximum differential pressure limit together with an accident loading allowance prevents filter blowout that could release unfiltered air into the exhaust stream. This allowed maximum operating differential pressure is 4.0 inches w.g. and applying an instrument uncertainty (CALC 16-008, Rev. 1, *Uncertainty of Mechanical Gauges for Differential Pressure Measurement Across HEPA Filter Banks*), gives a decision value of +3.89 inches w.g. for the local readout. The allowed differential pressure maximum value of 4.0 inches w.g. is based upon the DOE Nuclear Air Cleaning Handbook (DOE-HDBK-1169-2003) that recommends that HEPA filters "should be changed if the differential pressure [adjusted for rated flow] exceeds 4.0 inch w.g." Operation with differential pressure greater than 3 inches w.g. is alarmed in the CMR, but the control is not dependent upon this alarm. The minimum differential pressure limit assures detection of failed HEPA filter media no longer performing the required filtration function, but is also capable of detecting abnormally

Functional Requirements	Performance Criteria	Performance Evaluation
		low flow through the HEPA filters. The 0.20 inches w.g. limit is chosen as a value distinctly above zero but low enough to ensure only significantly off-normal conditions are identified. Applying an instrument uncertainty (CALC 16-008) gives a decision value of +0.31 inches w.g. on the local readout. The HEPA filter bank differential low alarm set point is set at +0.30 inches w.g. on the CMR, but the credited compliance decision is based on the local readout. Flow less than about 5–20% of normal design flow (sensitivity depends on HEPA DP loading) would be detected as a low HEPA differential pressure. Local gauges are read at prescribed surveillance intervals to verify the differential pressure values independent of the CMR. WIPP-058 evaluated the impact of incremental filter loading during a fire for which the UVFS/IVS is credited for mitigation. The design criteria for filter failure is a DP of 10.2 inches w.g., an increment of 6.2 inches w.g. above the maximum operating filter DP. The filters are assumed to plug at a DP of 10.2 inches w.g., (i.e., permit no flow) or tear through so they no longer afford filtration. The analysis concluded that it would take the combustion of approximately 63 gallons of diesel fuel to load the combined UVFS and IVS filters by an additional 6.2 inches w.g. However, the UVFS and IVS may not be operating concurrently, and there is no automatic transfer from one system to the other upon high DP. Either UVFS alone or both IVS filter units would be required to support operations in the UG. The limiting case of plugging of HEPA filters is associated with IVS, which could occur with as little as 29 gallons of diesel fuel (34 gallons in UVFS). There are vehicles that could be near the Waste Face that have a combined quantity of diesel and hydraulic fluid that exceed this quantity of fuel. However they are equipped with a SS vehicle fire suppression system in accordance with NFPA 122. As demonstrated in Section 4.4.2, these systems are credited with detecting and suppressing an incipient fire, thereby limiting the size of the fire and the resultant smoke and particulate loading of the HEPA filters. WIPP-058 also concluded that HEPA filters are not vulnerable to failure from ordinary combustible fires that might impact Waste Containers and ignite the associated waste packaging materials used in the UG. Fuel pool fires near the Waste Face could also be associated with leaks that pool underneath or near a vehicle but do not ignite, hence they would not be detected by the vehicle FSS. The likelihood of such leaks would be limited by the requirement to inspect vehicles planned for use within 25 feet of the Waste Face. Such leaks during equipment operation would be observed by an Administrative Control that requires an attendant for vehicles within 25 feet of the Waste Face. The attendant upon detecting leakage would direct the equipment operator to turn off the vehicle which would depressurize the fuel and hydraulic systems limiting further leakage (vehicle FSS

Functional Requirements	Performance Criteria	Performance Evaluation
		is still operable when a vehicle is not running). Spill response would also be summoned. Diesel fuel or hydraulic fluid leaked onto the mine surface would be difficult to ignite in the absence of heat sources associated with the vehicle (ignition by vehicle heat sources, if it occurred, would activate the FSS). HEPA filtration could also be affected by fan variable inlet vanes, fan inlet and outlet dampers, filter plenum inlet and outlet dampers, and the UVFS inlet damper that could be configured or fail in a position that defeats the safety function (by stopping flow). Flow stoppage, if it occurred, would be detected by the required monitoring of differential pressure across the HEPA filters.
The UVFS/IVS shall ensure that all flow from the Disposal Air circuit is filtered prior to release to the environment.	The differential pressure across the 308 Bulkhead is ≤ -0.05 inches w.g. (defined as air moving from E-140 towards S-400 and the Exhaust Shaft) and verifying the flow direction entering the active Disposal Room.	The UVFS/IVS SDD (SDD-VU00) prescribes maintaining a differential pressure of a maximum -0.05 inches w.g. across BH308 to ensure air flow is always toward the Waste Handling Areas. An instrument loop uncertainty value (Calc 15-029, Rev. 1, *Loop Accuracy for a NEW Differential Pressure Transmitter at Bulkhead 308 Rev. 1*), is added to -0.05 inches w.g. to give a value of -0.09 inches w.g. The alarm value is set at -0.09 inches w.g. This combined with validation that airflow is moving into the intake of the Disposal Panel is sufficient to show disposal exhaust air is directed to the Exhaust Shaft and to the filtration units and surface exhaust fans. This negative differential pressure at the 308 Bulkhead confirms that all air in the disposal circuit is exhausted to E-300 to S-400 and up the Exhaust Shaft regardless of the configuration of the UVFS/IVS exhaust fans or regulators and/or doors within the UG. This conclusion is supported by a ventilation modeling report (Ref: Mine Ventilation Services, Inc., *Modeling UVFS/IVS Fan Configurations with Various NVPs and Upset Conditions*). The bulkhead differential pressure is dependent on the exhaust air flow through the underground. Exhaust air flow is monitored via the DP across the UVFS/IVS filters. WIPP-058 considered the differential pressure to be loaded at 4.0 inches w.g. at the initiation of a fire event. Design criteria for filter failure is 10.2 inches w.g. per WIPP-058. Filter DP is alarmed at 3.0 inches w.g. and filters are changed out upon exceeding this set point. WIPP-058 determined there is sufficient DP margin to maintain filter integrity during credible underground pool fire events.
During downloading of Waste Containers with the Waste Shaft Conveyance, the UVFS/IVS shall ensure that airflow from the Waste Shaft Station is filtered prior to release to	The differential pressure across the 309 Bulkhead is ≥ +0.05 inches w.g. (defined as air moving from the inside of the BH309 chamber to the Waste Shaft Station) during downloading of	The 309 Bulkhead consists of two walls with a chamber in between. The differential pressure is measured from inside the chamber to the Waste Shaft Station side. A positive pressure indicates airflow is moving from the bulkhead chamber to the Waste Shaft Station side ensuring no air can pass from the Waste Shaft Station side to W-30. This is important during Waste Handling in the Waste Shaft. The UVFS/IVS ensures flow in this direction is maintained. Six small fans that are

Functional Requirements	Performance Criteria	Performance Evaluation
the environment.	Waste Containers when the Waste Shaft Conveyance is in use to transport TRU Waste.	mounted on the 309 Bulkhead wall can be turned on to boost the internal pressure from the 309 Bulkhead chamber to the Waste Shaft Station side. These fans may be utilized as needed to comply with the Bulkhead 309 DP requirements. If they are unavailable and the DP cannot be maintained, safety is assured by not conducting waste downloading operations. Thus, the fans themselves are not part of the SS safety function. Differential pressure of less than or equal to +0.02 inches w.g. gives a local low-pressure alarm. The value of +0.05 inches w.g. is adjusted to account for instrument loop uncertainty (CALC 16-010, *Loop Uncertainty Accuracy for a New Differential Pressure Indicator at Bulkhead 309*), which gives the value of +0.14 inches w.g. A local gauge is read at prescribed surveillance intervals to verify the differential pressure values independent of the CMR. This value is ≥ +0.14 inches w.g. across the 309 Bulkhead (CALC 16-010, *Loop Uncertainty Accuracy for a New Differential Pressure Indicator at Bulkhead 309*). Differential pressure across the 309 Bulkhead is monitored during downloading of Waste Containers. Additionally, verification is performed prior to each download of Waste Containers to verify that three UVFS/IVS exhaust fans are in service and that airflow at the Waste Shaft Station is towards the 308 Bulkhead. The bulkhead differential pressure is dependent on the exhaust air flow through the underground. Exhaust air flow is monitored via the DP across the UVFS/IVS filters. WIPP-058 considered the differential pressure to be loaded at 4.0 inches w.g. at the initiation of a fire event. Design criteria for filter failure is 10.2 inches w.g. per WIPP-058. Filter DP is alarmed at 3.0 inches w.g. and filters are changed out upon exceeding this set point. WIPP-058 determined there is sufficient DP margin to maintain filter integrity during credible underground pool fire events.
The UVFS/IVS shall draw air away from workers at the Waste Face.	Airflow shall be monitored at the intake of an Active Room while occupied.	Provided that the differential pressure at the 308 Bulkhead is maintained negative in accordance with the above performance criterion, the exhaust side of active Disposal Rooms is at a lower pressure than the inlet of the active Disposal Rooms. The layout of the Disposal Room for waste emplacement includes bulkheads on the exhaust side that direct airflow towards the waste exhaust drift. Personnel involved in CH waste emplacement operations are only located on the inlet side of the Waste Face in an active Disposal Room. Therefore airflow in the appropriate direction across the Waste Face and away from personnel is ensured. No quantitative flow rate is necessary to achieve the performance criterion; only verification of flow direction based on the qualitative evaluation of facility worker consequences.

On this basis, it has been determined that the UVFS/IVS is capable of performing its Safety Function.

4.4.5.5 Technical Safety Requirements (TSRs)

The following specific attributes of the UVFS/IVS are required to be protected in the TSRs:

- Minimum of one UVFS exhaust fan or two IVS exhaust fans in service.
- Operable HEPA filter unit(s) in service and properly aligned with exhaust fan(s).
- Differential pressure across each in service HEPA filter bank ≤ +3.89 inches w.g. and ≥ +0.31 inches w.g. locally.
- In service HEPA filter unit efficiency of ≥ 99%.
- Differential pressure ≤ -0.09 inches w.g. in the UG as measured across the 308 Bulkhead, which represents the air flow direction from E-140 towards E-300 and the Exhaust Shaft.
- Differential pressure ≥ +0.14 inches w.g. in the UG Waste Shaft Station area as measured across the 309 Bulkhead during downloading of Waste Containers on the Waste Shaft Conveyance, which represents the airflow direction from between the 309 Bulkhead wall (W-30) to S-400.
- Airflow into the Active Room while occupied.
- Operable differential pressure transmitters, CMR alarm indications, and local gauges.
- One UVFS exhaust fan and two IVS exhaust fans in service during downloading of Waste Containers.
- Airflow at Waste Shaft Station is towards the 308 Bulkhead.

4.4.6 Contact-Handled Waste Handling Confinement Ventilation System

The CVS draws air from the CH Bay, Room 108. The CH WH CVS also draws air from the CLR when Door 140 is open for placing CH Waste on the Conveyance Loading Car for downloading. Makeup air is provided by a supply air system. The CH WH CVS maintains a negative pressure with respect to the outside. The CH WH CVS fans draw the air through HEPA filters prior to exhausting the air to the environment. The CH WH CVS is selected as a SS control.

4.4.6.1 Safety Function

The Safety Function of CH WH CVS is to mitigate the consequences of radiological material releases from non-NPH fire events to acceptable levels by filtering air from the CH Bay, Room 108, or CLR prior to its release to the environment.

4.4.6.2 System Description

The CH WH CVS provides the equipment, controls, and monitoring necessary to 1) confine and channel airborne HAZMAT resulting from a fire involving CH Waste Containers, and 2) provide HEPA filtration of the exhaust air to minimize radiation dose to site personnel and the public should a release occur. The system consists of two air-handling units and two ventilation filtration units (each consisting of prefilters, two banks of HEPA filters, and an exhaust fan). Only one air-handling train, one filter unit, and one exhaust fan are in operation at a time. Fan operating status, the differential pressure across each HEPA filter bank and differential pressure indications are checked locally. High differential pressure across the HEPA filter banks or loss of ventilation airflow initiates an alarm in the CMR. The Central Monitoring

Room Operator (CMRO) can initiate switching to the standby filter train. If the operating exhaust fan fails, the standby exhaust fan automatically starts.

The CH WH CVS design provides a confinement barrier with HEPA filters providing the capability to limit releases of airborne radioactive contaminants from the CH Bay and Room 108. When placing CH Waste in the CLR, the CH WH CVS draws air through the open Door 140 into the CH Bay. The ventilation system maintains the CH Bay and Room 108 at a lower air pressure than the atmospheric pressure outside the WHB to ensure airflow into the CH Bay and Room 108, which allows only HEPA-filtered air to be exhausted.

The CH WH CVS is described in Chapter 2.0, Section 2.7.3.2, of this DSA, while the WIPP *Heating, Ventilation and Air Conditioning System, System Design Description* (SDD-HV00) describes the design, functions and services of the identified primary and secondary system interfaces for the CH WH CVS.

Boundaries and Interfaces

The CH WH CVS boundaries are the physical boundaries of the ventilation system including the HEPA filters, ductwork, and corresponding confinement and support structures. The CVS interfaces with potential to affect the Safety Function include the following:

- **Electrical Distribution System**: The electrical distribution system is required for operation of the CH WH CVS fans; however, it is not part of the SS boundary as the accidents for which the CH WH CVS is credited do not involve a concurrent loss of the electrical distribution system.
- **Waste Handling Building Fire Suppression System**: The WHB FSS reduces the particulate loading on the HEPA filters by suppressing fires at the incipient stage preventing fire growth.
- **Central Monitoring System**: The Central Monitoring System (CMS) provides indication of CH Waste Handling CVS operation to the CMR.
- **Vehicle Airlocks (Tornado door)**: Three vehicle airlocks are located along the south wall of the CH Bay. The airlocks permit vehicles to enter or exit the CH Bay without adversely affecting the building differential pressure. Personnel airlock doors are located in each vehicle airlock to permit personnel entry and exit. The internal and external doors, both vehicle and personnel doors, are interlocked to prevent simultaneous opening of the internal and external doors.
- **Contact-Handled / Remote Handled Bay Roll-up Door**: A roll-up door is located along the interface wall between the CH Bay and the RH Bay. This door is normally maintained closed; however, it can be opened to allow movement of equipment between the two bays. Opening and leaving the door open during Waste Handling operations could result in a loss of differential pressure in the CH Bay which would be alarmed in the CMR.
- **Contact-Handled / Remote Handled Bay Personnel Door**: A personnel door is located along the interface wall between the CH Bay and the RH Bay. This door is normally maintained closed; however, it can be opened to allow movement between the two bays. Opening and leaving the door open during Waste Handling operations could result in a loss of differential pressure in the CH Bay which would be alarmed in The CMR.
- **Contact-Handled Bay to Conveyance Loading Room Roll-up Door (Door 140)**: A roll-up door is located along the north CH Bay wall to allow entry and exit of the CLR. This door is normally maintained closed; however, it is opened to transfer CH Waste loads or other material transfers in and out of the CLR. The CLR volume is significantly less than that of the CH Bay with additional doors (one personnel door, one airlock door to the outside, and one door to the

Waste Shaft) that are normally closed. The Waste Shaft access door (Door 156) is interlocked with the CH Bay/CLR access door to prevent simultaneous opening. The airlock door to the outside is interlocked to prevent simultaneous opening of both airlock doors. The personnel door allows entry and exit into the personnel airlock between the CH Bay and the outside. Opening of the CH Bay to CLR door during Waste Handling operations could result in a loss of differential pressure in the CH Bay, which would be alarmed in the CMR. However, the arrangement of doors in the CLR prevents the loss of CH Bay differential pressure during normal operations.

- **North and West Contact-Handled Bay Access Doors**: Additional personnel (3 total) and equipment (1 total) access doors are located along the north and west walls of the CH Bay. Each of these four airlocks is interlocked to prevent simultaneous opening of the internal and external doors thereby allowing for maintaining differential pressure.
- **Room 108 Equipment Access Airlock**: An equipment airlock is located along the east wall of Room 108. The airlock permits movement of material into or out of Room 108 without adversely affecting the room differential pressure. The internal and external doors are interlocked to prevent simultaneous opening of the internal and external doors.
- **Room 108 Personnel Door (Tornado door)**: A personnel door is located along the outside wall of Room 108. This door is normally maintained closed; however, it can be opened to allow emergency egress. Opening of the door during Waste Handling operations could result in a loss of differential pressure in Room 108, which would be alarmed in the CMR.
- **Battery Charging Station/TRUDOCK Exhaust System**: A filtered exhaust system is installed for unloading operations at each TRUDOCK and the TRUPACT-III station. Fans at each location discharge through a duct into the intake of the 41-B-979/41-B-834 HEPA filter housings. Fans 41-B-835 and the 41-B-836 draw air from the 41-B-979/41-B-834 HEPA filter housings. The air from the fans is exhausted to the common duct to Station C and then to the CH Building exhaust point above the mezzanine roof in the northwest corner of the building.

4.4.6.3 Functional Requirements

Table 4.4.6-1 restates the Safety Function and identifies the corresponding minimum functional requirements necessary to perform the stated Safety Function.

Table 4.4.6-1. Functional Requirements for the Contact-Handled Waste Handling Confinement Ventilation System

Safety Function	Functional Requirements
To mitigate the consequences of radiological material releases from non-NPH fire events to acceptable levels by filtering air from the CH Bay, Room 108, or Waste Collar Area prior to its release to the environment.	The CH Waste Handling CVS HEPA filters shall reduce radioactive dose to the collocated worker to < 25 rem.
	The CH Waste Handling CVS shall maintain a negative pressure in the CH Bay and Room 108 with respect to ambient air pressure.

4.4.6.4 System Evaluation

This subsection provides the performance criteria for the CH Waste Handling CVS that characterize the capabilities necessary to meet the functional requirements listed in Table 4.4.6-1 and evaluates the capability to meet these performance criteria. The performance criteria and associated performance evaluations are provided in Table 4.4.6-2.

As part of the systems evaluation for the CH Waste Handling CVS, a Design Adequacy Assessment was performed in 09-BF-1002, Revision 1, *Back-Fit Analysis - Contact Handled Waste Handling Confinement Ventilation System Differential Pressures*, and 09-BF1003, Revision 1, *Back-Fit Analysis - Central Monitoring System*, that identified potential failure vulnerability issues associated with the instrument loops used for monitoring the CH Waste Handling CVS differential pressures across the HEPA filter banks and for monitoring the differential pressures in the CH Bay and Room 108 process areas. A Backfit Analysis was performed for each of the affected instrument loops in accordance with the *WIPP Backfit Analysis Process* (WP 09-CN.04) that identified system vulnerabilities and proposed system design changes to address them. As a result of the identified system vulnerabilities compensatory measures have been implemented until system design modifications are made.

The compensatory measures provide for the use of SS pressure differential transmitter local gauges that are independent of the instrument loops used to report differential pressure values to the CMR. These local gauges will be monitored per specified TSR Surveillance Requirements at intervals that provide adequate assurance that the CH Waste Handling System CVS remains Operable and capable of performing its required Safety Function when required.

The CH Waste Handling System history of use demonstrates that it continuously operates in a stable condition with only gradual, well-trended variations over time. As such, conduct of the TSR surveillances at the specified intervals by utilizing the redundant fully qualified SS local gauge indications adequately compensates for any potential loss of the CMR reporting functions if this were to occur. The differential pressure instrument loop reporting function to the CMR will remain in place, and is expected to provide real time CMR indications and alarm of developing conditions should they occur. Should the CMR reporting function fail, the CH Waste Handling CVS would remain operable and continue to perform its Safety Function. The failure of the CMR reporting function does not initiate an accident or influence the progression of an accident.

In summary, the differential pressure instrument loop CMR reporting function will be supplemented with surveillances using the pressure differential transmitter local gauges. These compensatory measures are noted in the CH Waste Handling CVS Performance Evaluations that follow.

Table 4.4.6-2. Performance Criteria and Performance Evaluation for the Contact-Handled Waste Handling Confinement Ventilation System

Functional Requirements	Performance Criteria	Performance Evaluation
The CH Waste Handling CVS HEPA filters shall reduce radioactive dose to the collocated worker to < 25 rem.	The CH Waste Handling CVS HEPA filtration shall provide filtration efficiency of ≥ 99 percent when challenged with poly-disperse aerosol with 0.3–0.7 micrometer aerodynamic equivalent diameter.	Exhaust flow passes through at least one HEPA filtration unit before discharging to the environment. A filter efficiency that removes > 99% particles in the range of 0.7 micron aerodynamic equivalent diameter ensures that respirable particles that contribute to onsite consequences are reduced to low levels. Each CH Waste Handling CVS HEPA filter bank is tested for efficiency in accordance with ASME N510, *Testing of Nuclear Air-Treatment Systems*. This test demonstrates an efficiency of at least 99.95%. A system assessment of the CH WH CVS was conducted in response to the DNFSB Recommendation 2004-2. The assessment was performed in accordance with the process and criteria outlined in *DOE Ventilation System Evaluation Guidance for Safety-Related and Non- Safety-Related System* (DNFSB 2004-2, Ventilation System Evaluation Guide). The review concluded that, "…the WIPP ventilation systems were appropriately evaluated against SS criteria

Functional Requirements	Performance Criteria	Performance Evaluation
		associated with the established DNFSB 2004-2 evaluation guidelines and adequately met them."
	Differential pressure across HEPA filter banks of ≤ 4 inches w.g.	The maximum differential pressure allowed for the HEPA filter banks assures that the HEPA filter banks are functioning properly to support assumed pre-accident filter capability and that the HEPA filter unit banks are not clogged or damaged. Establishing a maximum differential pressure limit also prevents filter blowout that could release unfiltered air into the exhaust stream. This is based on a desired differential pressure of less than or equal to +4.0 inches w.g. and applying an instrument uncertainty (CALC 16-007, *Room and HEPA Instrument Uncertainty*), which gives a value of +3.90 inches w.g., on the local readout. The allowed differential pressure maximum value of +4.0 inches w.g. is based upon the DOE *Nuclear Air Cleaning Handbook* (DOE-HDBK-1169-2003) that recommends that HEPA filters "should be changed if the differential pressure [adjusted for rated flow] exceeds 4.0 inches w.g." Operation with differential pressure greater than 3.0 inches w.g. is alarmed in the CMR, but the control is not dependent on this alarm. Likewise, establishing a minimum differential pressure limit assures that the HEPA filter banks are not being bypassed. This is based on a desired differential pressure of greater than or equal to +0.20 inches w.g. and applying an instrument uncertainty (CALC 16-007), which gives a value of +0.30 inches w.g., on the local readout. The HEPA filter bank differential low alarm set point is set at +0.30 inches w.g. in the CMR, but the control is not dependent on this alarm. Local gauges are read at prescribed surveillance intervals to verify the differential pressure values independent of the CMR. The allowed maximum and minimum differential pressure values also apply to the Battery Charging Station Exhaust filter banks, when the system is in use. The maximum value of 3.92 inches w.g. and minimum value of 0.28 inches w.g. are setpoints for the local readouts based on instrument uncertainty as determined in CALC 16-007, *Room and HEPA Instrument Uncertainty*. Exhaust air flow is monitored via the DP across the CH WH CVS HEPA filters. WIPP-058 considered the differential pressure to be loaded at 4.0 inches w.g. at the initiation of a fire event. Design criteria for filter failure is 10.2 inches w.g. per WIPP-058. Filter DP is alarmed at ≤ 3.0 inches w.g. WIPP-058 determined there is sufficient DP margin to maintain filter integrity during credible WHB fire events. The Administrative Control prohibition of liquid-fueled vehicles in the CH Bay (Section 4.5.4) would limit the available combustible materials to ordinary combustibles (e.g., in-situ, transient). The CH WH CVS is only credited for mitigation of non-pool fires. WIPP-058 determined that the amount of ordinary combustibles required to clog the one HEPA filter unit is equivalent to 1,650 pounds of cellulosic material. Fires involving ordinary combustibles would

Functional Requirements	Performance Criteria	Performance Evaluation
		activate the SS CH WH CVS well before the HEPA filters would clog. Additionally, the FPP will maintain combustible loading well below these quantities.
	The Battery Charging Station Exhaust filtration shall provide filtration efficiency of ≥ 99 % when challenged with poly-disperse aerosol with 0.3–0.7 micrometer aerodynamic equivalent diameter.	Exhaust flow passes through at least one HEPA filtration unit before discharging to the environment. A filter efficiency that removes > 99% particles in the range of 0.7 micron aerodynamic equivalent diameter ensures that respirable particles that contribute to onsite consequences are reduced to low levels. Each Battery Charging Station HEPA filter bank is tested for efficiency in accordance with ASME N510, *Testing of Nuclear Air-Treatment Systems*. This test demonstrates an efficiency of at least 99.95%. For mitigation of a release event in the CH Bay and/or Room 108, air flow is credited to be filtered and exhausted through the CH Waste Handling CVS HEPA filtration. However, the Battery Charging Station Exhaust filtration provides a means for a portion of the CH Bay/Room 108 air to be exhausted to the environment. While the Battery Charging Station Exhaust filtration system is not required to be in operation to mitigate a release event, any air released via this pathway requires filtration. Therefore, verification of filter efficiency ensures that any exhaust air, forced or unforced, would be adequately filtered prior to release to the environment.
The CH Waste Handling CVS shall maintain a negative pressure in the CH Bay and Room 108 with respect to ambient air pressure.	The pressure in the CH Bay and Room 108 is ≤ -0.01 inches w.g. with respect to ambient air pressure.	The CH Waste Handling CVS is a once-through/recirculation system designed to provide a confinement barrier with HEPA filters providing the capability to limit releases of airborne radioactive contaminants from the CH Bay, Room 108, and the CLR when placing CH Waste in the CLR (e.g., Door 140 is open). A DP of ≤ -0.01 inches w.g. ensures air in CH Bay and Room 108 is directed through the filtered exhaust path. This value is adjusted by instrument loop uncertainty (CALC 16-007) which gives a value of ≤-0.04 inches w.g. in the CH Bay and ≤-0.04 inches w.g. in Room 108 on the local readout. While alarmed in the CMR, local gauges are read at prescribed surveillance intervals to verify the differential pressure values independent of the CMR. This capability was demonstrated by calculation and/or performance of an air balance. In the event of a fire, small fires would not challenge the capability of the CH Waste Handling CVS to maintain this negative pressure and filter combustion products prior to release. Larger fires would initiate the WHB FSS, which would suppress the quantity of particulate and thereby prevent exceeding the CH Waste Handling CVS filtration capability as discussed in WIPP-023, *Fire Hazards Analysis for the WIPP*.

On this basis, it has been determined that the CH Waste Handling CVS is capable of performing its Safety Function.

4.4.6.5 Technical Safety Requirements (TSRs)

The following specific attributes of the CH Waste Handling CVS are required to be protected in the TSRs:

- One exhaust fan (41-B-816 or 41-B-817) in service.
- One operable HEPA filter unit (41-B-814 or 41-B-815) in service.
- Differential pressure across each in service HEPA filter bank less than or equal to +3.90 inches w.g. and greater than or equal to +0.30 inches w.g. locally.
- In service HEPA filter unit efficiency of greater than or equal to 99%.
- Differential pressure less than or equal to -0.04 inches w.g. in the CH Bay and less than or equal to -0.04 inches w.g. in Room 108, with respect to ambient outside air pressure.
- Operable differential pressure instrumentation, CMR alarm indications, and local gauges.
- Battery Exhaust System exhaust HEPA filter unit (41-B-979 and 41-B-834) efficiency of greater than or equal to 99%.
- Differential pressure across each in service Battery Exhaust System HEPA filter bank less than or equal to +3.92 inches w.g. and greater than or equal to +0.28 inches w.g. locally.

4.4.7 Waste Hoist Brakes

The Waste Hoist Brakes provide fail safe brake actuation to ensure stoppage of the Waste Hoist. A control system allows for controlled movements of the Waste Hoist and monitors the hoist for conditions requiring application of the brakes. The Waste Hoist Brakes are selected as a SS control.

4.4.7.1 Safety Function

The Safety Function of the Waste Hoist Brakes is to prevent damage to TRU Waste Containers by reducing the likelihood of an uncontrolled Waste Conveyance movement that results in a loss of confinement and the release of radiological materials.

4.4.7.2 System Description

The Waste Hoist Brakes are a subsystem of the Waste Hoist. See SDD UH00, *Underground Hoisting System*, for a description of the Waste Hoist and the Waste Hoist Brakes. The following is a brief summary of some of the key operational requirements of the Waste Hoist Brakes.

The Waste Hoist Brakes SS components consist of four brake units (two units each on the East and West hoist drum brake discs), a Lilly Controller with associated governor and contacts, and two emergency dump valves (i.e., valves SV-2 and SV-5). Each brake unit consists of 2 modules per unit, one module on each side of the disc and includes the spring, brake pads of a material and surface area as defined by the brake manufacturer, and the caliper housing. Any two brake units are capable of stopping the Waste Conveyance movement at its maximum travel speed of 500 feet per minute (fpm) plus a 10% allowance.

The brake units are automatically set by spring force of greater than 37,000 pounds from modules on each side of the disc. To release the brakes one of the two redundant hydraulic pumps is started. One pump provides hydraulic fluid to both the East and West disc brakes via redundant spool valves. The hydraulic pressure applied to the brake calipers release the spring force on the brakes. The brake pads move away

from the brake disc allowing the disc and the hoist drum to rotate. Electrically energized spool valves SV-4 (normally closed) and SV-6 (normally closed) apply hydraulic pressure to release the West brakes while SV-3 (normally closed) and SV-1 (normally closed) apply pressure to release the East disc brakes. The emergency dump valves, SV-2 and SV-5, are closed electrically to hold the brakes open and are de-energized to relieve the pressure and allow the brakes to set. Dump valves SV-2 and SV-5 are piped together so that if only one dump valve opens, the hydraulic pressure is released from all four brake units. Upon a loss of electric power, the energized valves de-energize and return to either their normal open or closed state. The four spool valves would have to remain in the open position, the emergency dump valves would have to remain closed, and pump pressure would have to be maintained for the brakes to remain in the released position. If any one of the four spool valves goes to the closed position or either of the dump valves goes to the open position, the hydraulic pressure on the brakes is released and the spring force in the calipers automatically applies pressure to the pads setting the brakes. In addition to all six valves remaining in the energized state, the pump would have to remain running at full discharge pressure to maintain pressure on the caliper springs.

SV-7 directs the hydraulic fluid flow from SV-4, SV-6, SV-1, and SV-3 back to the appropriate pump reservoir. In normal operation, when brake set is needed and the brake pressure has not dropped below 1,200 psi within 1 to 2 seconds, dump valves SV-2 and SV-5 will de-energize (i.e., open) sending hydraulic fluid to SV-11 that directs fluid back to the appropriate pump reservoir. Additionally, there is a manual release dump valve that can be actuated to release the hydraulic pressure on the brakes.

Upon any event that results in an electrical power loss, the valves fail to their normal open or closed state. This prevents hydraulic pressure from being applied to the brakes, ensuring the brakes set. A loss of electrical power event also removes power to the hydraulic pumps removing hydraulic pressure on the brake springs.

Hoist speed is controlled by the process control and monitored by the Lilly controller. The electronic process control system will apply the brakes and stop the conveyance in an over speed condition, but it is not credited. In an over speed condition, either the process controller (non-credited) or the Lilly Controller (credited) will de-energize the valves and the hydraulic pump to remove pressure from the springs allowing the brakes to set. Upon detecting an over speed condition, the operator (as well as any of the shaft tenders, personnel on the conveyance or the 4th and 5th floors) can press the emergency stop (E-stop) button. This will de-energize all 6 valves, which will apply the brakes. However, as this requires an operator action, the E-stop buttons are not credited as a control. This provides three methods to apply the hoist brakes in the event of an over speed condition: process controller, Lilly controller, and operator action.

The Lilly Controller that monitors the hoist speed consists of a shaft with cams, inertial (weight type) governors (so called fly-ball governors), a shaft that moves down as the ball spin speed increases, floating levers attached to the arm, and contact blocks. At a hoist conveyance over speed condition of approximately 550 fpm (maximum 500 fpm speed plus a 10% allowance) or a lower hoist speed depending upon the hoist location in the shaft, the Lilly Controller will remove the electric power to the emergency dump valves. A power interruption anywhere in the control system will automatically release the hydraulic pressure and set the brakes.

Through appropriate gearing, the main cam wheel of the Lilly makes one third of a revolution for full travel of the hoist. Wheels with cams activate arms at various positions of the conveyance and these arms operate switches to assure that the conveyance is at the appropriate speed for various positions in the shaft. Two inertial governors mounted on the Lilly monitor the speed of the conveyance. Speed governor contacts are used to indicate that a “Loss of Lilly” condition has occurred, and to assure that the speed of

the conveyance is within specified limits. The fly-ball governor operates by centrifugal force which causes the balls to spin around a shaft. As the speed of the hoist increases, the weighted balls spin faster and rise toward a horizontal plane resulting in the collar to which the balls are attached pushing down a center shaft. As the collar moves down, the center shaft moves floating levers. When the floating levers move an arm to a preset level, the arm motion removes the connection between two contacts. This opens the circuit supplying electric power to the hydraulic system. The loss of electrical power to the hydraulic system causes emergency dump valves SV-2 and SV-5 to open. The open dump valves return the hydraulic fluid to the running pump reservoir, which results in a loss of hydraulic pressure and allows the spring force to set the brakes. Although the process controller will set the brakes under normal conditions, the Lilly Controller is credited to set the brakes in an over speed condition. The E-stop button may also be used to set the brakes and stop the conveyance. The E-stop button which requires operator action is not credited as a control; however, the E-stop function is maintained and tested as a non-credited but important safety feature of the Waste Hoist Brakes (i.e., subject to KE 10-2). Only the automatic features are credited to set the brakes and stop the conveyance.

Boundaries and Interfaces

The Waste Hoist Brake System interfaces with potential to affect the Safety Function include the following:

- **Waste Hoist Support Structure (Section 4.4.9)**: The Waste Hoist Support Structure with its support framework, conveyance, wire ropes, and counterweight are required to support the Waste Hoist Brakes.

4.4.7.3 Functional Requirements

Table 4.4.7-1 restates the Safety Function and identifies the minimum functional requirements necessary to perform the stated Safety Functions.

Table 4.4.7-1. Functional Requirements for Waste Hoist Brakes

Safety Function	Functional Requirements
To prevent damage to TRU Waste Containers by reducing the likelihood of an uncontrolled Waste Conveyance movement that results in a loss of confinement and the release of radiological materials.	The Waste Hoist Brakes shall stop a fully loaded conveyance to prevent an uncontrolled movement of the Waste Hoist that could breach TRU Waste Containers.

4.4.7.4 System Evaluation

This subsection provides the performance criteria for the Waste Hoist Brake System that characterizes the capabilities necessary to meet the functional requirements listed in Table 4.4.7-1 and evaluates the Brake System capability to meet these performance criteria. The performance criteria and associated evaluations for the Waste Hoist Brake System are provided in Table 4.4.7-2.

Table 4.4.7-2. Performance Criteria and Performance Evaluation for the Waste Hoist Brakes

Functional Requirements	Performance Criteria	Performance Evaluation
The Waste Hoist Brakes shall stop a	The brakes shall apply adequate pressure by	Per the SDD-UH00, *Underground Hoisting, System Design Description*, Waste Hoist Requirements Section, the Waste

Functional Requirements	Performance Criteria	Performance Evaluation
fully loaded conveyance to prevent an uncontrolled movement of the Waste Hoist that could breach TRU Waste Containers.	the brake pads on the rotor disc to stop a maximally loaded conveyance within 30 feet of travel distance after application of the brakes.	Conveyance with rope fittings has a maximum weight of 33 tons. The design maximum payload of the Waste Conveyance is 45 tons. The combined weight of the conveyance and the maximum payload is 78 tons. The counterweight of 52 tons offsets the equivalent weight in the conveyance and payload. As shown in Calculation ETO-H-228, *Evaluation of the Stopping Distance of A Descending Waste Shaft Conveyance Utilizing Two Brake Units*, two operable brake units will safely stop the maximally loaded conveyance during an emergency stop situation. The brake spring force is determined by the brake manufacturer based on the requirement to stop a maximally loaded conveyance within a travel distance of 30 feet when the brakes are applied. As shown in Calculation ETO-H-228, the brake spring force is sufficient to ensure that any two brake units will stop the conveyance travel. The current springs, supplied by the brake manufacturer, have a force of at least 37,000 pounds (Manufacturer's manual M1128, *Installation, Operating, and Maintenance Instructions for Disc Brake Caliper Type VS MK2*, Issue 2). The spring force is verified indirectly by measuring the caliper travel during the monthly preventive maintenance. The performance criteria of bringing the conveyance to a stop within a 30-foot travel distance will result in a rapid, but controlled deceleration of the conveyance. The Waste Hoist is designed for a maximum deceleration of 16 feet/sec^2 upon actuation of an emergency stop; a force which is significantly less than the gravitational force associated with a free fall of the conveyance. This force may result in some minor movement or jostling of containers but is not expected to significantly damage a payload.
	The Waste Hoist Brakes automatically apply the brakes upon loss of hydraulic pressure due to loss of electric power or conveyance over speed.	The two emergency dump valves, which are hard piped together, and the other four solenoid actuated valves require electrical power to energize the valves and apply hydraulic pressure to release the brakes. All the valves are designed to be fail safe in that when electric power to the valve actuator is removed, springs in the valves force the valves into the fail safe position (open) allowing the hydraulic fluid to return to the reservoir thereby removing pressure from the brake units. Specifically, the credited emergency dump valves open to release hydraulic pressure and permit spring closure of the brake units. Only one of the dump valves has to open to relieve the hydraulic pressure on the springs. There is sufficient redundancy in the hydraulic system to provide adequate backup to the credited emergency dump valves upon loss of electric power. SDD-UH00 Chapter 3, Section 2.2.1.1, states that the operating speed of the Waste Conveyance is 500 fpm. With an over speed allowance of 10%, the operability limit for the over speed controller will be 550 fpm. The hoist speed is monitored by both the Process Controller (non-credited) and the credited Lilly Controller. The Lilly Controller is a highly reliable mechanical control system. The Lilly Controller is commonly used in mine hoist systems and is based

Functional Requirements	Performance Criteria	Performance Evaluation
		on a proven design that has been used in the mining industry for approximately 100 years and is highly reliable and efficient in monitoring the conveyance location and speed. WIPP normally does not operate a fully loaded Waste Conveyance at 500 fpm. Additionally, the daily functional (pre-operational) test of the over speed controller is done at a slower speed than the 550 fpm limit. ETO-H-228, *Evaluation of the Stopping Distance of A Descending Waste Shaft Conveyance Utilizing Two Brake Units,* demonstrates that two Waste Hoist Brake Units will stop the conveyance within a 30-foot travel distance at speeds of 550 and 600 fpm. The daily test of the over speed controller at a lower speed demonstrates that the over speed controller is operational and will stop the conveyance at operational speeds lower than the maximum design speed. The daily functional test and the ETO verification that the brakes will stop a fully loaded Waste Conveyance at speeds ≥550 fpm adequately demonstrate that the brakes will be set if an over speed condition is reached at any point during hoist travel. This essentially results in the loss of electric power scenario described above and results in setting the brakes and stopping the conveyance. To maintain compliance with the MSHA regulations, all components of the Waste Hoist Brake System, to include the manually activated E-stop buttons, are inspected, tested, and maintained to ensure these components are reliable. The E-stop function is maintained and tested as a non-credited but important safety feature of the Waste Hoist Brakes (i.e., subject to KE 10-2). The maintenance and testing of the non-credited components to meet the MSHA requirements ensures the reliability of the credited components is maintained.
	Brake pad material is ≥ 0.5 inch thick.	The brake pad composition and thickness is approved by the brake manufacturer. The brake pads, when new, are 1-inch thick. The basis for replacing the pads at ≤0.5 inch thick is that at less than 0.5 inch thick, the pads are not thick enough to ensure proper adjustment of the brake pad stroke to allow the required piston travel of 0.137 to 0.157 inch and it provides some margin above the manufacturer's recommendation.

On this basis, it has been determined that the Waste Hoist Brakes are capable of performing their Safety Function.

4.4.7.5 Technical Safety Requirements (TSRs)

The following specific attributes of the Waste Hoist Brakes are required to be protected in the TSRs:

- The brakes shall apply adequate pressure by the brake pads on the brake disc to stop a maximally loaded conveyance within 30 feet of travel distance after application of the brakes.
- The Waste Hoist Brake System automatically applies the brakes upon loss of hydraulic pressure as a result of conveyance over speed or loss of electrical power.

- Brake pad material is greater than or equal to 0.5 inch thick.

4.4.8 Underground Fuel and Oil Storage Areas

The UG Fuel and Oil Storage areas contain substantial quantities of liquid-combustibles (i.e., diesel fuel) for supporting the operation of UG vehicles/equipment and both are located at or north of S-90. The UG Fueling Storage Area is near the W-170/N-150 intersection while the Waste Shaft Station is in the S-400 drift between the W-30 and E-140 drifts. The Oil Storage Area is located in an alcove off the S-90 drift between drift E-300 and drift E-540. Both of these locations are over 300 feet from areas where TRU Waste may be present (i.e., Waste Shaft Station, Waste Transport Path, and Disposal Rooms) which prevents their involvement in events that could affect TRU Waste. The UG Fuel and Oil Storage Areas control is selected as a SS control.

4.4.8.1 Safety Function

The locations of the UG Fuel and Oil Storage Areas are credited to protect an IC of this analysis through the performance of the Safety Function to preclude or eliminate the flammable or combustible liquid hazard resulting in a pool fire or explosion at either storage location from affecting TRU Waste through the provision of a substantial separation distance.

4.4.8.2 System Description

The UG Fuel Storage Area is located in an alcove off the construction side of the UG exhaust in W-170 upstream of the Exhaust Shaft, remote from TRU Waste Handling operations. The UG Oil Storage Area is also located north of the Waste Shaft near the UG maintenance and support facilities. The UG Fuel and Oil Storage Areas are located greater than 300 feet north of the Waste Shaft Station while the Waste Transport Path and Disposal Rooms are south of the Waste Shaft Station. The UG Fuel and Oil Storage Areas are located a safe distance away from the Waste Shaft Station, Waste Transport Path, and Disposal Panels to prevent fueling activity or oil storage related pool fires or explosions from involving TRU Waste Containers.

Boundaries and Interfaces

The UG Fuel and Oil Storage Areas control does not rely on any other SSCs to perform its Safety Function.

4.4.8.3 Functional Requirements

Table 4.4.8-1 restates the Safety Function and identifies the corresponding minimum functional requirements necessary to perform the stated Safety Functions.

Table 4.4.8-1. Functional Requirements for Underground Fuel and Oil Storage Areas

Safety Function	Functional Requirements
To preclude or eliminate the flammable or combustible liquid hazard resulting in a pool fire or explosion at either storage location from affecting TRU Waste through the provision of a substantial separation distance.	Locations of the UG Fuel and Oil Storage Areas are defined and located a safe distance away from TRU Waste.

4.4.8.4 System Evaluation

This subsection provides the performance criteria for the UG Fuel and Oil Storage Areas that characterizes the capabilities necessary to meet the functional requirements listed in Table 4.4.8-1 and evaluates the capability to meet these performance criteria. The performance criteria and associated evaluations are provided in Table 4.4.8-2.

Table 4.4.8-2. Performance Criteria and Performance Evaluation for Underground Fuel and Oil Storage Areas

Functional Requirements	Performance Criteria	Performance Evaluation
Locations of the UG Fuel and Oil Storage Areas are defined and located a safe distance away from TRU Waste.	The physical locations of the UG Fueling and UG Oil Storage Areas shall be located at or north of the S-90 Drift.	The FHA identifies that due to the nature of the natural salt surface and the lack of continuous combustibles in the UG drifts, a fire originating in either location would be localized to the area and TRU Waste Containers would not be affected. The location and separation (over 300 feet between the Waste Shaft Station and the S-90 drift) of the UG Fuel and Oil Storage Areas from the TRU Waste storage and transport areas ensures that liquid-fuel storage areas containing limited fuel quantities are at locations far greater than that associated with the diameter of the worst case pool fires from areas where Waste may be present (i.e., Waste Shaft Station, Waste Transport Path, Disposal Rooms). (Documented in WIPP-023).

On this basis, it has been determined that the UG Fuel and Oil Storage Areas are capable of performing their Safety Function.

4.4.8.5 Technical Safety Requirements (TSRs)

The following specific attribute of UG Configuration is required to be protected in the TSRs:

- The UG Fuel and UG Oil Storage Areas shall be located at or north of the S-90 Drift.

4.4.9 Waste Hoist Support Structure

The Waste Hoist Support Structure is the physical structure that supports the Waste Hoist. The Waste Conveyance and its counterweight are supported by wire ropes that are connected to a motor operated drum located at the top of the Waste Hoist Structure. The Waste Hoist is designed to support a maximum payload of 45 tons. The Waste Hoist Support Structure is selected as an SS control.

4.4.9.1 Safety Function

The Waste Hoist Support Structure is credited to protect an IC of this analysis through the performance of the Safety Function to prevent a radiological material release due to an uncontrolled Waste Conveyance movement that results in a loss of confinement, a fire, or an NPH initiated failure of the Waste Hoist Support Structure by establishing a basis for the low (U for NPH and EU for uncontrolled movement and fires) unmitigated likelihood assignments.

4.4.9.2 System Description

The Waste Hoist Support Structure consists of four steel I-beam columns, mounted on a substantial concrete foundation, supporting four steel I-beam girders, bedplate, friction drum, drum shaft, and six head ropes that fully support the Waste Hoist Support Structure. The Waste Hoist Support Structure is capable of supporting a conveyance (with rope fittings) of 33 tons, a counterweight (with rope fittings) of 52 tons, and a design payload of 45 tons and is designed to withstand the DBE. The Waste Hoist Support Structure is constructed of noncombustible steel components, and is designed to support the Waste Hoist and a maximum load conveyance under all normal, upset, and design basis NPH conditions. The Waste Hoist Support Structure is interconnected with and enclosed by the SS WHB (Section 4.4.1); specifically, the Waste Hoist Tower portion of the WHB. The Waste Hoist Tower is fire protected by a wet-pipe sprinkler system that is part of the WHB FSS.

The Waste Hoist Support Structure is described in Chapter 2.0, Section 2.4.4.1.1, shown in Figure 2.4-14, and described in SDD UH00, *Underground Hoisting System*.

Boundaries and Interfaces

The Waste Hoist Support Structure interfaces with potential to affect the Safety Function include the following:

- **Waste Handling Building**: The Waste Hoist Support Structure is enclosed within the Waste Hoist Tower section of the WHB (Section 4.4.1). The SS WHB provides protection of the Waste Hoist from NPH events and fires.
- **Waste Handling Building Fire Suppression System**: The SS WHB FSS (Section 4.4.3) provides for mitigation of fires occurring in the Waste Hoist Tower.

4.4.9.3 Functional Requirements

Table 4.4.9-1 restates the Safety Function and identifies the corresponding minimum functional requirements necessary to perform the stated Safety Function.

Table 4.4.9-1. Functional Requirements for the Waste Hoist Support Structure

Safety Function	Functional Requirements
To prevent a radiological material release due to an uncontrolled Waste Conveyance movement that results in a loss of confinement, a fire, or an NPH initiated failure of the Waste Hoist Support Structure by establishing a basis for the low (U for NPH and EU for uncontrolled movement and fires) unmitigated likelihood assignments.	Support the Waste Hoist and a maximum load Waste Conveyance under all normal, upset, and design basis NPH conditions, thereby preventing a loss of confinement.
	Prevent failure of the Waste Hoist due to a large fire.

4.4.9.4 System Evaluation

This subsection provides the performance criteria for the Waste Hoist Support Structure that characterizes the capabilities necessary to meet the functional requirements listed in Table 4.4.9-1 and evaluates the capability to meet these performance criteria. The performance criteria and associated evaluations are provided in Table 4.4.9-2.

Table 4.4.9-2. Performance Criteria and Performance Evaluation for the Waste Hoist Support Structure

Functional Requirements	Performance Criteria	Performance Evaluation
Support the Waste Hoist and a maximum load Waste Conveyance under all normal, upset, and design basis NPH conditions, thereby preventing a loss of confinement.	The Waste Hoist Support Structure shall be designed for the vertical load combination of deadload, maximum payload, and forces transmitted from the hoisting ropes and tailropes during normal operation.	The Waste Hoist load bearing components are robust in design and construction to support a fully loaded conveyance for all operating conditions. The Waste Hoist Support Structure is designed to comply with 30 CFR 57, "Mineral Resources: Safety and Health Standards – Underground Metal and Nonmetal Mines," paragraph 57.19001, "Rated capacities," to support the dead load and a conveyance design payload of 45 tons. The Waste Hoist Support Structure is designed to a limit of 25% of American Institute of Steel Construction allowable stresses to address other stresses related to accelerations, decelerations, impact loading, and fatigue. The head ropes are designed in accordance with ANSI-M11.1, *Wire Rope for Mines*, and 30 CFR 57, paragraph 57.19021, "Minimum rope strength," which requires a factor of safety for the hoisting ropes of at least 5.9. The minimum rope breaking strength is 234,000 pounds per rope. Therefore with six head ropes sharing the load, the minimum total breaking strength is 1,404,000 pounds. From this, the minimum breaking strength is more than twice the standard required minimum strength satisfying both 30 CFR 57, paragraphs 57.19001 and 57.19021. The Waste Hoist Support Structure is anchored to a substantial concrete foundation that meets design requirements as described in SDD UH00 that are necessary to support the combination of deadload, maximum payload, and forces transmitted from the hoisting ropes and tailropes during the normal operation and upset conditions. This design meets anchoring as required in 30 CFR 57, paragraph 57.19002, "Anchoring."
	Waste Hoist Support Structure shall be designed for a DBE of 0.1 g PGA.	DOE-STD-1020-2012 provides that superseded standards are "…available for reference and use at existing facilities…" The Waste Hoist Support Structure has been classified as SS; therefore, it is required to meet PC-2 criteria of DOE-STD-1020-2002 which refers to IBC 2000 for seismic criteria, which establishes a 0.06 g seismic criteria for the WIPP site as documented in CALC 15-009. WIPP is situated in a UBC Seismic Zone 1 region. The WHB is designed to withstand a DBE with 0.1 g PGA with a 1,000-year return interval. The analysis is documented in SDD CF00-GC00. The original facility construction, designed to survive a 0.1 g PGA with a 1,000-year return period, is more robust when compared to the current PC-2 requirements for the WIPP geological location. The 2008 or the 2014 U.S. Geological Survey national hazard map shows that at the WIPP site (UBC Seismic Zone 1), a 0.1 g PGA would have approximately a 2500-year return interval. A 1,000-year return interval would require the WHB to survive a significantly lower PGA of approximately 0.06. In June 2009, a re-assessment of NPH was performed on the WHB in accordance with DOE Order 420.1B, Chapter IV, Section 3.c. The assessment verified no changes to NPH intensities and no significant changes in WHB SSCs. The study was completed under WO #0706998. The adjacent TMF is also constructed to withstand the 0.1 g DBE. The adjacent Support Building (office building) is designed so that its main lateral force resisting structural members prevent these structures from collapsing on the WHB during a DBE. Therefore, the Waste Hoist Support Structure, as designed, is capable of performing its Safety Function by not collapsing due to a DBE.

Functional Requirements	Performance Criteria	Performance Evaluation
Prevent failure of the Waste Hoist due to a large fire.	The Waste Hoist Support Structure shall be constructed of noncombustible materials and not subject to failure due to in-situ combustible loads.	The Waste Hoist Support Structure is constructed of structural steel. WIPP-023, *Fire Hazards Analysis*, concludes that credible fires associated with non-combustible construction, minimal in-situ combustibles, and maintenance activities would not cause fires of significant size and duration that could lead to failure of the Waste Hoist Structure and surrounding building. There are no operational needs for accumulation of ordinary combustibles. The SS WHB FSS covers this area and would prevent large fires in this area.

On this basis, it has been determined that the Waste Hoist Structure is capable of performing its Safety Function.

4.4.9.5 Technical Safety Requirements (TSRs)

The following specific attribute of the Waste Hoist Support Structure is required to be protected in the TSRs:

- The Waste Hoist Support Structure has robust non-combustible steel components and is designed to support the Waste Hoist and a maximum load conveyance under all normal, upset, and design basis NPH conditions.

4.4.10 Facility Casks

RH Waste Canisters are placed in a Facility Cask prior to their movement to the Disposal Room. The RH Waste casks provide shielding for workers handling the waste and due to their robust construction, they provide a significant barrier to radiological releases due to fires, explosions, impacts, and internal deflagrations. The RH Facility Casks (Facility Cask, LWFC) are selected as a SS control.

4.4.10.1 Safety Function

The Facility Casks are credited to protect ICs of this analysis through the performance of the following Safety Functions:

- To mitigate worker exposure to a high radiation source by reducing the gamma and/or neutron surface dose rates through the provision of robust shielding.
- To prevent the release of radiological material due to fires, impacts, or internal RH Waste Canister deflagrations due to their robust construction reducing the likelihood for release of radiological material.

4.4.10.2 System Description

There are two types of Facility Casks, the RH Facility Cask and the LWFC used to transfer the RH Waste Canister from the WHB FCLR to final emplacement in the UG boreholes. The RH Facility Cask is designed to provide shielding for an RH Waste Canister such that the cask surface dose rate is less than 200 millirem (mrem) per hour when the RH Waste Canister surface dose rate is ≤ 7,000 rem per hour. However, the maximum canister surface dose rate allowed for shipment to WIPP is 1,000 rem per hour. The LWFC is designed to provide shielding for an RH Waste Canister such that the LWFC surface dose rate is < 200 millirem per hour when the RH Waste Canister surface dose rate is ≤ 100 rem per hour.

RH Facility Cask

The RH Facility Cask is a double end-loading, shielded container weighing approximately 67,000 pounds empty and 75,000 pounds loaded (with a maximum weight canister of 8,000 pounds). The RH Facility Cask is approximately 165 inches long with an approximate height of 98 inches and consists of two concentric steel cylinders with the annulus between them filled with lead. The internal cylinder has a 30-inch diameter and a 0.50-inch wall thickness. The outer cylinder has an external diameter of 41.75 inches with a wall thickness of 0.625 inch. The lead in the annulus is 4.75 inches thick. The robustness of the RH Facility Cask serves to prevent any breach of the RH Waste Canister.

The RH Facility Cask is designed such that it maintains its shielding integrity when dropped from a height of up to 102 inches onto a concrete floor. The equivalent impact load is 1 g horizontal and 13 g vertical (SDD WH00). The RH Facility Cask has a motor-operated gate-type shield valve at each end used for loading and unloading RH Waste Canisters. The shield valves are motor operated, with manual overrides, and have air operated spring-loaded pins, which open when compressed air is applied. The spring-loaded pins lock the valve gates closed when the compressed air is removed. The RH Facility Cask shield valves have approximately 9-inch-thick steel blocks and are designed to support the weight of a fully loaded RH Waste Canister when they are closed and the cask is vertical. The RH Facility Cask has two sets of forklift pockets. The lower set is used for transport and placement on the Horizontal Emplacement and Retrieval Equipment (HERE) or the Horizontal Emplacement Machine (HEM) and the upper set is used for maintenance.

Light-Weight Facility Cask

The LWFC is a double end-loading shielded container, weighing approximately 48,450 pounds empty and 56,450 pounds loaded (with a maximum weight canister of 8,000 pounds). The LWFC is approximately 165 inches long with an approximate height of 92 inches and consists of two concentric steel cylinders with the annulus between them filled with lead. The internal cylinder has a 30-inch diameter and a 0.50-inch wall thickness. The outer cylinder has an external diameter of 36.25 inches with a wall thickness of 0.625 inch. The lead annulus is 2.0 inches thick. The robustness of the LWFC serves to prevent any breach of the RH Waste Canister.

The LWFC is designed such that it maintains its shielding integrity when dropped from a height of up to 102 inches onto a concrete floor. The equivalent impact load is 1 g horizontal and 13 g vertical (SDD WH00). The LWFC has a motor-operated gate-type shield valve at each end used for loading and unloading RH Waste Canisters. The shield valves are motor operated, with manual overrides, and have air operated spring-loaded pins, which open when compressed air is applied. The spring-loaded pins lock the valve gates closed when the compressed air is removed. The LWFC shield valves have approximately 8.5-inch-thick steel gates and are designed to support the weight of a fully loaded RH Waste Canister when they are closed and the cask is vertical. The LWFC has two sets of forklift pockets; the lower set is used for transport and placement on the HERE or the HEM, and the upper set is used for maintenance.

The RH Facility Casks are described in Chapter 2.0, Section 2.5.3, of this DSA.

Boundaries and Interfaces

The RH Facility Cask and LWFC do not rely on any other SSCs to perform their Safety Functions.

4.4.10.3 Functional Requirements

Table 4.4.10-1 restates the Safety Functions and identifies the corresponding minimum functional requirements necessary to perform the stated Safety Functions.

Table 4.4.10-1. Functional Requirements for the Remote-Handled Facility Cask and Light Weight Facility Cask

Safety Function	Functional Requirements
To mitigate worker exposure to a high radiation source by reducing the gamma and/or neutron surface dose rates through the provision of robust shielding.	Provide radiation shielding to protect facility workers during RH Facility Cask/LWFC handling or transport.
To prevent the release of radiological material due to fires, impacts, or internal RH Waste Canister deflagrations due to their robust construction reducing the likelihood for release of radiological material.	Maintain confinement integrity for the enclosed RH Waste Canister when the cask is subjected to impacts, and drops.
	Shield RH Waste Canister from flames.
	Maintain confinement integrity of the RH Facility Cask/LWFC when subjected to internal deflagrations.

4.4.10.4 System Evaluation

This subsection provides the performance criteria for the RH Facility Cask and LWFC that characterizes the capabilities necessary to meet the functional requirements listed in Table 4.4.10-1 and evaluates the capability to meet these performance criteria. The performance criteria and evaluations for the Facility Cask and LWFC are provided in Table 4.4.10-2.

Table 4.4.10-2. Performance Criteria and Performance Evaluation for the Remote-Handled Facility Cask and Light Weight Facility Cask

Functional Requirements	Performance Criteria	Performance Evaluation
Provide radiation shielding to protect facility workers during RH Facility Cask/LWFC handling or transport.	The closed RH Facility Cask/LWFC shall provide shielding such that the surface dose rate is ≤ 200 mrem/hour when transporting RH Waste.	The RH Facility Cask/LWFC construction, including approximately 4.75-inch and 2-inch lead shielding respectively, and an 8.0-inch thick shield valve at each end, provides radiation shielding for the worker when it contains an RH Waste Canister. The RH Facility Cask ensures the dose rate at the external surface of the RH Facility Cask is less than 200 mrem/hour when the surface of the enclosed RH Waste Canister has a dose rate of 1,000 rem/hour. The LWFC ensures the dose rate at the external surface of the LWFC is less than 200 mrem/hour when the surface of the enclosed RH Waste Canister has a dose rate of 100 rem/hour. The shielding provided by the RH Facility Cask and LWFC is documented in Radiological Control Position Paper 2002-03, *Final Results of WIPP RH TRU Facility Penetration and Shielding Analysis*, July 04, 2002.

Functional Requirements	Performance Criteria	Performance Evaluation
Maintain confinement integrity for the enclosed RH Waste Canister when the cask is subjected to impacts, and drops.	The closed RH Facility Cask/LWFC shall prevent a breach of the enclosed RH Waste Canister when subjected to impacts.	The RH Facility Cask and LWFC are designed to applicable ASTM Standards (e.g., *Standard Specification for Steel Bars, Carbon and Alloy, Hot-Wrought and Cold Finished,* ASTM A29; *Standard Specification for Steel Bars, Carbon, Hot-Wrought, Special Quality*, ASTM A576; *Standard Specification for Carbon Structural Steel*, ASTM A36; *Standard Specification for Steel Bars, Carbon, Cold Finish, Standard Quality*, ASTM A108; *Standard Specification for Pressure Vessel Plates, Carbon, Steel, for Moderate and Lower Temperature Service*, ASTM A516; and *Standard Specification for Electro deposited Coatings of Zinc on Iron and Steel,* ASTM B633). The robust construction of the Facility Cask/LWFC is capable of surviving drops of up to 102 inches onto a concrete surface (*WIPP Waste Handling System, System Design Description*, SDD WH00, Chapter III-1, Section 3.1.1 A and B). Facility Casks are primarily subject to impacts due to collisions and drops. Except when the RH Facility Cask/LWFC is on the Waste Conveyance, any drop would be from a height of less than the 102 inches for which it is designed. Vehicle collisions would be of low speed due to the nature of the process in the UG. In the event of a drop due to a failure of the Waste Conveyance, any event involving a RH Facility Cask/LWFC is bounded by a Facility Pallet loaded with CH Waste.
Shield RH Waste Canister from flames.	The closed RH Facility Cask/LWFC shall have no penetrations to allow direct flame impingement on the contained RH Waste Canister.	The RH Facility Cask and LWFC are designed to applicable ASTM Standards (e.g., ASTM A29, A576, A36, A108, A516, and B633). The construction of the Facility Cask/LWFC protects the RH Waste Canister from direct flame impingement (SDD WH00, Chapter III-1, Section 3.1.1E).
Maintain confinement integrity of the RH Facility Cask/LWFC when subjected to internal deflagrations.	The closed RH Facility Cask/LWFC shall prevent a release when subjected to internal RH Waste Canister deflagrations.	The RH Facility Cask and LWFC are robust containers as described above, weighing 67,000 and 48,450 pounds, respectively. An internal deflagration in a RH Waste Canister within either cask is qualitatively judged to be insufficient to breach the cask.

On this basis, it has been determined that the RH Facility Cask and LWFC are capable of performing their Safety Functions.

4.4.10.5 Technical Safety Requirements (TSRs)

The following specific attributes of the RH Facility Cask and LWFC are required to be protected in the TSRs:

- The closed RH Facility Cask/LWFC shall provide shielding such that the surface dose rate is ≤ 200 mrem/hour when transporting RH Waste.

- The closed RH Facility Cask/LWFC shall prevent a breach of the enclosed RH Waste Canister when subjected to impacts.
- The closed RH Facility Cask/LWFC shall have no penetrations to allow direct flame impingement on the contained RH Waste Canister.
- The closed RH Facility Cask/LWFC shall prevent a breach when subjected to an internal RH Waste Canister deflagration.

4.4.11 Type B Shipping Package

TRU Waste is received at WIPP from waste generators. For this waste to be transported to WIPP, the waste must be contained in a closed Type B Shipping Package. The design of these packages are certified by the U.S. Nuclear Regulatory Commission (NRC) following testing to prove the package contents are protected in the event of fires and impacts which could be encountered on the nation's highways. Type B Shipping Packages are credited as an IC in the hazard analysis when TRU Waste is inside a closed Shipping Package. The Type B Shipping Package is selected as a SS control.

4.4.11.1 Safety Function

The Safety Function of the Type B Shipping Package is to limit the release of radiological material from fires, payload deflagration, and/or collisions due to its robust construction and qualification under accident conditions, thereby mitigating the consequences of an event, and its installed shielding on the RH 72-B Packages reduces the likelihood for excessive gamma and/or neutron exposure to workers.

4.4.11.2 System Description

The Type B Shipping Package design is certified by the NRC for transport of radioactive wastes on the nation's highways. Extensive testing has been performed to ensure the TRU Waste is protected from a release in the event of an upset or accident condition.

RH Waste is shipped in a RH-TRU 72-B Shipping Package, while CH Waste is shipped in a TRU Package Transporter Model II (TRUPACT-II), a Half Package Transporter (HalfPACT), or a TRU Package Transporter Model III (TRUPACT-III) Shipping Package. RH Waste, in shielded containers, will be managed, handled, and emplaced using the same process as is used for the CH Waste, and will be shipped in HalfPACTs.

Type B Shipping Packages are designed and constructed to the requirements presented in 10 CFR 71, "Packaging and Transportation of Radioactive Material," and are certified in accordance with the requirements of 49 CFR 173, Subpart I, "Class 7 (Radioactive) Materials." To meet the certification, the package design is required to successfully pass the criteria provided in 10 CFR 71.71, "Normal Conditions of Transport," and 10 CFR 71.73, "Hypothetical Accident Conditions," which include demonstration that no release of contents greater than allowed per 10 CFR 71 occurs after a 30-foot drop onto an unyielding surface, 1 meter puncture bar drops, or a thermal exposure of 800°C (1,475 F) for 30 minutes. Type B Shipping Packages are not specifically designed nor constructed or certified for mitigation of explosions from internal or external sources. However, the Type B Shipping Package is judged, due to its robust construction, to maintain confinement integrity and limit the release of radioactive material when subjected to internal deflagrations. The WIPP Waste Acceptance Criteria (WAC) (Section 4.5.8) is relied upon to preclude shipment of waste that could result in an internal container fire or deflagration.

A properly manufactured and loaded Type B Shipping Package supports the WIPP accident analysis as it:

- Prevents direct flame impingement on TRU Waste Containers.
- Prevents release of radiological material from collisions, drops, and fires.

Boundaries and Interfaces

The Type B Shipping Package does not rely on any other SSCs to perform its Safety Function.

4.4.11.3 Functional Requirements

Table 4.4.11-1 restates the Safety Function and identifies its corresponding minimum functional requirements necessary to perform the stated Safety Function.

Table 4.4.11-1. Functional Requirements for Type B Shipping Package

Safety Function	Functional Requirements
To limit the release of radiological material from fires, payload deflagration, and/or collisions due to its robust construction and qualification under accident conditions, thereby mitigating the consequences of an event, and its installed shielding on the RH 72-B Packages reduces the likelihood for excessive gamma and/or neutron exposure to workers.	Maintain confinement of the enclosed TRU Waste Containers when subjected to ordinary combustible fires, pool fires, and impacts.
	Limits release from internal TRU Waste Container deflagration.
	Provide radiation shielding to protect facility workers.

4.4.11.4 System Evaluation

This subsection provides the performance criteria for the Type B Shipping Package that characterizes the capabilities necessary to meet the functional requirements listed in Table 4.4.11-1 and evaluates the capability to meet these performance criteria. The performance criteria and evaluations for the Type B Shipping Package are provided in Table 4.4.11-2.

Table 4.4.11-2. Performance Criteria and Performance Evaluation for Type B Shipping Package

Functional Requirements	Performance Criteria	Performance Evaluation
Maintain confinement of the enclosed TRU Waste Containers when subjected to ordinary combustible fires, pool fires, and impacts.	The Type B Shipping Package shall meet criteria of 10 CFR 71.	Certificate of Compliance with 10 CFR 71. To meet certification, the package is designed to successfully pass the criteria provided in 10 CFR 71.71, “Normal Conditions of Transport,” and 10 CFR 71.73, “Hypothetical Accident Conditions,” which include demonstration that no release of contents greater than allowed per 10 CFR 71 occurs after a 30-foot drop onto an unyielding surface or a thermal exposure of 800 ºC (1,475 ºF) for 30 minutes. This exceeds the expected accident conditions postulated for the WIPP Hazard Analysis.

Functional Requirements	Performance Criteria	Performance Evaluation
Limit release from internal TRU Waste Container deflagration.	The Type B Shipping Package shall meet criteria of 10 CFR 71.	A Type B Shipping Package provides a robust barrier (e.g., O-rings, sealing mechanism) against release of radiological material from an internal Waste Container deflagration. Type B Shipping Packages are robust containers as described above, and their design is NRC certified for transport of radiological material on the nation's highways. An internal deflagration in a Type B Shipping Package is qualitatively judged to limit the release of radioactive material. The WIPP WAC (Section 4.5.8) is relied upon to preclude shipment of waste that could result in an internal container fire or deflagration.
Provide radiation shielding to protect facility workers.	The Type B Shipping Package shall meet criteria of 10 CFR 71.	In accordance with the following analyses: • *TRUPACT-II Safety Analysis Report.* • *HalfPACT Safety Analysis Report.* • *TRUPACT-III Safety Analysis Report.* • *RH-TRU 72-B Type B Package Safety Analysis Report.* The surface dose rates are below the regulatory allowable limits (10 CFR 71.47(a)) for normal conditions of transport. This ensures that workers are protected against radiation exposure when in proximity to and/or handling Shipping Packages.

On this basis, it has been determined that the Type B Shipping Package is capable of performing its Safety Function.

4.4.11.5 Technical Safety Requirements (TSRs)

The following specific attribute of the Type B Shipping Package is required to be protected in the TSRs:

- The Type B Shipping Package shall meet criteria of 10 CFR 71.

4.4.12 Facility Cask Loading Room, Cask Unloading Room, and Transfer Cell Shielding

The FCLR, CUR, and Transfer Cell, were designed to provide shielding for workers when handling high-level defense waste (400,000 rem per hour gamma surface dose and 45 rem per hour neutron). WIPP has not processed any of this waste to date and it is not anticipated that such waste will ever be processed at WIPP. The waste received at WIPP has gamma and neutron dose rates significantly less than the levels for which WIPP was designed. The FCLR, CUR, and Transfer Cell provide shielding when removing RH Waste Canisters from their 72-B Shipping Packages and subsequent placement into an RH Facility Cask for transport to the UG. The FCLR, CUR, and Transfer Cell Shielding is selected as a SS control.

4.4.12.1 Safety Function

The FCLR, CUR, and Transfer Cell Shielding is credited to protect an IC of this analysis through the performance of the Safety Function to mitigate worker exposure to a high radiation source by providing permanent radiation shielding when RH Waste Canisters are not shielded by other SSCs (e.g., Type B Shipping Package, RH Facility Cask, or LWFC).

4.4.12.2 System Description

The FCLR, CUR, and Transfer Cell, are constructed of concrete walls, floors, and ceilings up to 54 inches thick, which provide permanent radiation shielding for personnel whenever RH Waste Canisters are not in a Shipping Package, RH Facility Cask or the LWFC. The shielding is designed for an internal gamma surface dose rate of 400,000 rem per hour and for an internal neutron surface dose rate of 45 rem per hour.

The FCLR, CUR, and Transfer Cell Shielding arrangement is analyzed in Radiological Control Position Paper 2001-03, *Shielding Analysis and Verification Process for the WIPP RH TRU Waste Handling Process*, and Radiological Control Position Paper 2002-03, *Final Results of WIPP RH TRU Facility Penetration and Shielding Analysis*. The ability of the FCLR, CUR, and Transfer Cell structure to provide the required shielding is documented in CS-41-B-003, *Calculate Required Shield Thicknesses in RH Waste Handling Area*. The shielding design is shown in drawing series 41-K-002-014.

The FCLR, CUR, and Transfer Cell are described in DSA Chapter 2.0, Section 2.4.1.2.2, while the design parameters are described in SDD CF00-GC00, *Plant Buildings, Facilities, and Miscellaneous Equipment System Design Description*.

Boundaries and Interfaces

The FCLR, CUR, and Transfer Cell Shielding do not rely on any other SSCs to perform the Safety Function.

4.4.12.3 Functional Requirements

Table 4.4.12-1 restates the Safety Function and identifies its corresponding minimum functional requirements necessary to perform the stated Safety Function.

Table 4.4.12-1. Functional Requirements for Facility Cask Loading Room, Cask Unloading Room, and Transfer Cell Shielding

Safety Function	Functional Requirements
To mitigate worker exposure to a high radiation source by providing permanent radiation shielding when RH Waste Canisters are not shielded by other SSCs (e.g., Type B Shipping Package, RH Facility Cask, or LWFC).	Provide radiation shielding to protect facility workers during Cask Unloading, Transfer Cell, and Facility Cask Loading operations.

4.4.12.4 System Evaluation

This subsection provides the performance criteria for the FCLR, CUR, and Transfer Cell Shielding that characterizes the capabilities necessary to meet the functional requirements listed in Table 4.4.12-1 and evaluates the capability to meet these performance criteria. The performance criteria and evaluations for the FCLR, CUR, and Transfer Cell Shielding are provided in Table 4.4.12-2.

Table 4.4.12-2. Performance Criteria and Performance Evaluation for Facility Cask Loading Room, Cask Unloading Room, and Transfer Cell Shielding

Functional Requirements	Performance Criteria	Performance Evaluation
Provide radiation shielding to protect facility workers during Cask Unloading, Transfer Cell, and Facility Cask Loading operations.	The FCLR, CUR, and Transfer Cell walls, ceiling, floors, windows, shall provide shielding such that the external dose rate is ≤ 200 mrem per hour.	The FCLR, CUR, and Transfer Cell construction provides radiation shielding for the worker when it contains RH Waste. The FCLR, CUR, and Transfer Cell Shielding arrangement is analyzed in Radiological Control Position Paper 2001-03, March 28, 2001, and Radiological Control Position Paper 2002-03, July 04, 2002. The ability for the FCLR, CUR, and Transfer Cell structure to provide the required shielding is documented in CS-41-B-003, Rev. 0, July 12, 1979. Protection of the worker is further addressed by the Radiation Protection Safety Management Program (SMP), DSA Chapter 7.0. The radioisotopic source activity of the bounding 72B Shipping Package canister is 1,000 rem per hour exposure rate at the canister surface since this is the maximum legal exposure rate allowed at the surface of a 72B canister. It was found that for 1,000 rem per hour surface dose rate canisters, that dose rates in the operating gallery would be 200 mrem per hour, or less (DA:04:02007). Therefore, since the design of the FCLR, CUR, and Transfer Cell was for waste with a surface activity significantly greater than those experienced, and the analysis of the shielding required for the maximum surface dose rate canister determined that the dose rate to an individual in the operating gallery would be 200 mrem per hour, or less, then the FCLR, CUR, and Transfer Cell Shielding is sufficient to meet the Performance Criteria.

On this basis, it has been determined that the FCLR, CUR, and Transfer Cell Shielding is capable of performing its Safety Function.

4.4.12.5 Technical Safety Requirements (TSRs)

The following specific attribute of the FCLR, CUR, and Transfer Cell Shielding is required to be protected in the TSRs:

- The FCLR, CUR, and Transfer Cell shall provide shielding such that the external dose rate is ≤ 200 mrem/hour.

4.4.13 Panel 6 and Panel 7, Room 7 Bulkheads

Waste Containers from the Los Alamos waste stream containing MIN-02, are located in Panel 6, and Panel 7, Room 7. This waste stream was determined to be the source of the exothermic chemical reaction which occurred in February 2014. These Panels/Rooms have been closed with bulkheads to ensure that any future event involving this waste stream would be contained within a closed Panel/Room. The Panel 6 and Panel 7, Room 7 Bulkheads are selected as a SS control.

4.4.13.1 Safety Function

The Panel 6 and Panel 7, Room 7 Bulkheads are credited to protect an IC of this analysis through the performance of the Safety Function to reduce the quantity of material that could be released from an

exothermic chemical reaction within a CH Waste Container located in Panel 6, or Panel 7, Room 7, by creating static conditions that resist transmission of particulate and allow for gravitational settling.

4.4.13.2 System Description

The Panel 6 bulkheads are constructed of steel and have a flexible flashing that is bolted to the walls (ribs) and roof (back) of the entry. The secured bulkhead creates static conditions that resist the release of radiological material as well as creating a stagnant area for gravitational settling of radiological material.

The Panel 7, Room 7 bulkheads are constructed of steel with a flexible flashing consisting of two layers of brattice that is bolted to the walls (ribs) and roof (back) at the air intake and outlet side of the Room. The secured bulkhead creates static conditions that resist the release of radiological material and create a stagnant area for gravitational settling of radiological material. The intake air steel bulkhead is more than 400-feet away from the nearest Waste Containers because Room 7 is only partly filled with waste. On the air exhaust side of Room 7, at South-2180, the room regulator bulkhead is in place, and a (new) steel bulkhead is installed approximately 8-feet from the regulator bulkhead.

The Panel 6, or Panel 7, Room 7 bulkheads are described in Chapter 2.0, Section 2.4.4.6.1, of this DSA while the design parameters are described in SDD-VU00, *Underground Ventilation System Design Description*.

Boundaries and Interfaces

The Panel 6, and Panel 7, Room 7 bulkhead do not rely on any other SSCs to perform the Safety Function.

4.4.13.3 Functional Requirements

Table 4.4.13-1 restates the Safety Function and identifies its corresponding minimum functional requirements necessary to perform the stated Safety Function.

Table 4.4.13-1. Functional Requirements for Panel 6, and Panel 7, Room 7 Bulkheads

Safety Function	Functional Requirements
To reduce the quantity of material that could be released from an exothermic chemical reaction within a CH Waste Container located in Panel 6, or Panel 7, Room 7 by creating static conditions that resist transmission of particulate and allow for gravitational settling.	The Panel 6, and Panel 7, Room 7 bulkheads isolate closed Disposal Rooms and/or Panels from the active ventilation system to contain any potential releases, and minimize leakage outside the closed areas.

4.4.13.4 System Evaluation

This subsection provides the performance criteria for the Panel 6, and Panel 7, Room 7 Bulkheads that characterize the capabilities necessary to meet the functional requirements listed in Table 4.4.13-1 and evaluates the capability to meet these performance criteria. The performance criteria and evaluations for the Panel 6, and Panel 7, Room 7 Bulkheads are provided in Table 4.4.13-2.

Table 4.4.13-2. Performance Criteria and Performance Evaluation for Panel 6, and Panel 7, Room 7 Bulkheads

Functional Requirements	Performance Criteria	Performance Evaluation
The Panel 6, and Panel 7, Room 7 bulkheads isolate closed Disposal Rooms and/or Panels from the active ventilation system to contain any potential releases, and minimize leakage outside the closed areas.	The Panel 6, and Panel 7, Room 7 bulkheads are a solid noncombustible wall (except for flexible flashing) that is secured to the Panel opening (i.e., walls, ceiling, floor).	DOE-STD-5506-2007 allows for a damage ratio (DR) of 0.1 to be assumed for overpacked drums of sound integrity. The bulkheads are qualitatively assessed to provide a similar performance as an overpacked container. The solid surface of the outer steel barrier and its attachment to the panel opening restrict airflow out of the enclosed panel and reduces the release of material. Additionally, the closed area is a large open volume which minimizes any pressure spike due to the drum exothermic chemical reaction event and there is no active ventilation that would contribute to driving the suspended radiological material outside the closed area (CBFO letter 15-1489, *Waste Isolation Pilot Plant Nitrate Salt Bearing Waste Container Isolation Plan*, Revision 2, May 29, 2015). The radiant heat flux from a 500 kW fire is less than 13 kilowatts per square meter (kW/m^2) at a distance of 3 feet as discussed in Section 5.16 of the FHA (WIPP-023). As discussed in WIPP-058, Section 6.16, the actual fire loading in the array is less than 500 kW. In addition the actual distance between bulkheads and the waste arrays is significantly greater than the 3 feet discussed in the FHA (at least 10 feet in the exhaust side of Panel 7, Room 7 and Panel 6). Thus actual heat flux is far less than the critical radiant heat flux of the flexible material used to seal the periphery of the ventilation control bulkhead and the acceptable heat flux of 13 kW/m^2. Therefore any fire occurring within the waste array involving the inherent combustible loading will not damage the flexible flashing around the ventilation control bulkhead and in no way challenge the structural integrity of the closure bulkhead. Additionally, the conditions associated with an exothermic reaction are expected to be of few-second duration during the initial flash fire release from the drum followed by a longer duration of burning in the localized area near the drum and within the drum that would occur at a significant distance from the closure bulkhead. Based on these factors, it is qualitatively judged that a DR of 0.1 is conservative.

On this basis, it has been determined that the Panel 6, and Panel 7, Room 7 Bulkheads are capable of performing their Safety Function.

4.4.13.5 Technical Safety Requirement (TSRs)

The following specific attributes of the Panel 6, and Panel 7, Room 7 Bulkheads are required to be protected in the TSRs:

- The Panel 6, and Panel 7, Room 7 Bulkheads shall provide a solid noncombustible wall (except for flashing) that is secured to the Panel opening.

4.4.14 Vehicle Barriers

Vehicle Barriers outside the southwest wall of the WHB reduce the likelihood for pool fires and/or vehicle impacts in this area which could affect CH Waste that is stored in the CH Bay Area west of the

Airlock 100 entrance into the bay. The area protected by the Vehicle Barriers is the southwest part of the CH Bay. The specific wall section, referred to hereinafter as the southwest wall, that is protected is that portion of the south exterior CH Bay wall starting at Airlock 100 running in a westerly direction to the CH Bay/TMF common wall. The external barrier is extended beyond the CH Bay/TMF common wall by approximately 5 feet in the westerly direction to ensure protection of CH Waste. The Vehicle Barriers consist of two continuous interconnected sections of concrete (e.g., Jersey type) barriers that protect the CH Bay southwest wall from vehicle impacts. Vehicle Barriers are selected as an SS control.

4.4.14.1 Safety Function

The Safety Function of the CH Bay Vehicle Barriers is to reduce the likelihood for release of radiological material from CH Waste in the WHB due to impacts by vehicles and/or fires adjacent to the southwest wall of the CH Bay by providing a standoff distance from the CH Bay and substantial resistance to vehicular impacts.

4.4.14.2 System Description

Vehicle Barriers are a configured set of concrete barriers (e.g., Jersey type barriers) consisting of two continuous sections. The first section includes two rows of interconnected concrete barriers, installed approximately 5 feet west of the CH Bay/TMF common wall extending south from the TMF exterior wall a minimum distance of 25 feet. The second section consists of one row of interconnected concrete barriers positioned at least 25 feet south of the CH Bay exterior southwest wall extending west between Airlock 100 to a point approximately 5 feet west of the CH Bay/TMF common wall (approximately 85 feet in total length) to intersect with the double row of barriers. An opening with a gap of ≤ 3 feet at the intersection of the east-west barrier and the double row of barriers is permitted for fire department access. Vehicle Barriers are assembled using robustly constructed commercially available, Jersey barrier type traffic control devices of precast reinforced concrete in a standard shape. A concrete Jersey type Vehicle Barrier is approximately 32 inches high, with a 24-inch base, in a variety of lengths, and weighs 400 pounds or more per lineal foot. The barrier contains links (typically steel loops) at the end of each barrier that allow multiple barriers to be connected in series using connectors (e.g., steel J-J hooks or pin-and-loop) provided by the barrier manufacturer. As noted above, multiple barriers are connected in series using the manufacturer's recommended connectors to form a configured barrier of the desired length a minimum of 25 feet from the exterior of the southwest wall of the CH Bay. The Vehicle Barriers are employed to prevent vehicles from entering the area immediately adjacent to the CH Bay southwest wall. Establishment of this area prevents vehicles from crashing through the CH Bay wall and into the CH Bay were CH Waste may be stored, as well as precluding fueled vehicles/equipment from being in this area. Prohibiting liquid-fueled vehicles/equipment from this area reduces the likelihood for fires, especially combustible liquid fires, to occur which could compromise the CH Bay external surface and expose CH Waste to a significant heat flux.

The Vehicle Barriers are described in DSA Chapter 2.0, Section 2.4. WIPP Drawing 24-Z-044-W1 shows the placement of the Vehicle Barriers.

Boundaries and Interfaces

The Vehicle Barriers do not rely on any other SSCs to perform the Safety Function. The barriers must be in place when storing CH Waste in the CH Bay in the area west of the Airlock 100 entrance into the bay.

4.4.14.3 Functional Requirements

Table 4.4.14-1 restates the Safety Function and identifies the corresponding minimum functional requirements necessary to perform the stated Safety Function.

Table 4.4.14-1. Functional Requirements for Vehicle Barriers

Safety Function	Functional Requirements
To reduce the likelihood for release of radiological material from CH Waste in the WHB due to impacts by vehicles and/or fires adjacent to the southwest wall of the CH Bay by providing a standoff distance from the CH Bay and substantial resistance to vehicular impacts.	The Vehicle Barriers shall be installed to prevent entry of vehicles/equipment containing liquid-combustibles into the area immediately adjacent to the CH Bay southwest wall between Airlock 100 and the TMF.

4.4.14.4 System Evaluation

This subsection provides the performance criteria for the Vehicle Barriers that characterize the capabilities necessary to meet the functional requirements listed in Table 4.4.14-1 and evaluates the capability to meet these performance criteria. The performance criteria and evaluations for the Vehicle Barriers are provided in Table 4.4.14-2.

Table 4.4.14-2. Performance Criteria and Performance Evaluation for Vehicles Barriers

Functional Requirements	Performance Criteria	Performance Evaluation
The Vehicle Barriers shall be installed to prevent entry of vehicles/equipment containing liquid-combustibles into the area immediately adjacent to the CH Bay southwest wall between Airlock 100 and the TMF.	A configured set of concrete barriers consisting of two sections: section one is a two row barrier positioned approximately 5 feet west of the CH Bay/TMF common wall and extending south from the TMF south exterior wall a minimum distance of 25 feet; and section two is a single row barrier, positioned a minimum of 25 feet south of the CH Bay southwest exterior wall extending west between Airlock 100 to a point approximately 5 feet west of the CH Bay/TMF common wall to intersect with the double row of barriers. An opening with a gap ≤3 feet at the intersection of the east-west barrier and the double row of barriers is permitted. The nominal distances and configuration of the barriers are depicted in	The Vehicle Barriers, typically Jersey barriers, are robust modular concrete barriers routinely used to route traffic, prevent vehicle access, and to protect structures from vehicle impacts. A Jersey type Vehicle Barrier is approximately 32 inches tall, with a 24-inch base, in a variety of lengths, and weighs 400 pounds or more per lineal foot. The barrier contains linking devices at the end of each barrier that allow multiple barriers to be connected in series using connectors (e.g., steel J-J hooks or pin-and-loop) provided by the barrier manufacturer. The barrier design effectively contains and redirects larger vehicles, including semi-trailer (tractor-trailer) trucks. Preventing liquid-fueled vehicles in this area precludes the release of radiological material from CH Waste stored in the CH Bay from vehicle impacts and/or pool fires external to the CH Bay. CH Waste may be stored inside the CH Bay an aisle width (nominal 44 inches) from the southwest wall. ECO 13396, *Placement of Concrete Jersey Barriers*, examines the placement of jersey barriers in the vicinity of the Exhaust Filter Building. This analysis determined that a large loaded truck weighing approximately 18,700 pounds traveling at 5 mph would move a single barrier no more than 6 feet. When pinned together, the center barrier of a group of 5 barriers would move no more than 6 feet if struck by the same vehicle traveling at 17 mph. Also, a 6,500-pound light truck traveling at 8 mph into a single barrier would displace the barrier by no more than 6 feet. If pinned, the center barrier of a group of 5 barriers would move no more than 6 feet if struck by the 6,500-pound vehicle traveling at 29 mph. This analysis assumes a perpendicular (i.e., head on) strike of the barrier, simple conservation of momentum, and does not account for vehicle braking or redirection of the vehicle when the barrier is

Functional Requirements	Performance Criteria	Performance Evaluation
	Chapter 2.0, Figure 2.4-7, which shows nominal dimensions.	struck. Vehicle operations in the WHB Parking Area Unit primarily consist of tractor-trailers delivering trailers containing TRU Waste Shipping Packages or retrieving empty trailers, yard tractors moving loaded and empty trailers, and forklifts used to move Shipping Packages into the WHB or returning empty Shipping Packages into the parking area. Normal traffic patterns with heavy vehicles are well south of the barriers. Smaller vehicles (e.g., maintenance vehicles, forklifts) may travel to and from the TMF and would present primarily low angular impacts to the western boundary of Vehicle Barriers. All vehicle operations are low speed (10 mph or less) and restricted by the physical size and configuration of the parking areas south of the CH Bay. The minimum 25-foot separation distance from the WHB provided by the southernmost barrier plus the nominal aisle spacing provided on the interior of the CH Bay where waste is staged, is nearly 5 times the skid distance analyzed in ECO 13396 for interconnected barriers. While larger vehicles up to 80,000 pounds could be in the area, the distance is qualitatively judged to provide sufficient protection to the WHB. The approximately 5 foot distance on the west boundary plus the nominal aisle spacing provided on the interior of the CH Bay (i.e., total of nearly 9 feet separation distance), in combination with being a double barrier, is judged to be sufficient in that a vehicle strike in this area would be from smaller vehicles and would likely be a low angular, low speed impact due to prevailing traffic patterns. Larger tractor-trailers delivering waste are not considered a significant threat to this barrier, as traffic is directed into the area through a gate and in a direction that are both well south of this location. A gap of ≤3 feet is permitted between the north-south and east-west sections to permit access and placement of fire hose(s) by the fire department. The ≤3 foot gap is less the width of liquid-fueled vehicles traversing this area and will protect the CH Bay southwest wall while providing the access required by the fire department.

On this basis, it has been determined that the Vehicle Barriers are capable of performing their Safety Function.

4.4.14.5 Controls (Technical Safety Requirement)

The following specific attributes of the Vehicle Barriers are required to be protected in the TSRs:

- A configured set of concrete barriers consisting of two sections; section one is a double row barrier, with the base of the exterior barrier positioned approximately 5 feet west of the CH Bay/TMF common wall and extending south from the TMF south exterior wall a minimum distance of 25 feet; and section two is a single row barrier, positioned at least 25 feet south of the CH Bay southwest exterior wall extending west between Airlock 100 to a point approximately 5 feet west of the CH Bay/TMF common wall to intersect with the double row barrier. An opening with a gap ≤3 feet gap is permitted at the intersection of the two sections.

4.5 SPECIFIC ADMINISTRATIVE CONTROLS

SACs are those controls that provide a preventive and/or mitigative function comparable to an SC or SS SSC. The SACs for WIPP TRU Waste processes are discussed below and are specified in Chapter 3.0 as a preventive or mitigative control in the accident analysis or for worker protection as identified in the Event Tables.

Table 4.5-1 provides a summary list of SACs from Chapter 3.0, the accidents for which the Specific Administrative Control (SAC) designation applies, Safety Functions, functional requirements, and performance criteria judged to require TSR coverage. The following sub-sections provide related details including a description of the SAC provisions and performance evaluation of the applicable controls

Table 4.5-1. Summary of Specific Administrative Controls

Safety Functions	Functional Requirements	Performance Criteria
Pre-operational Checks of Vehicles/Equipment (Section 4.5.1)		
To prevent vehicle/equipment pool fires involving CH Waste Containers by ensuring vehicles/equipment operating near CH Waste are checked for such conditions as braking, steering, leaks, and cleanliness prior to being permitted to operate near CH Waste to reduce the likelihood of pool fire formation due to leaks and/or collisions.	Prior to operation, Waste Handling vehicles/equipment and non-Waste Handling vehicles/equipment to be operated within 25 feet of the CH Waste Face, in the VEZ, or in the Waste Shaft Station when CH Waste is present, are inspected for leaks, braking, lights, audible horn, and steering, as applicable.	As applicable, the following elements shall be verified prior to Waste Handling vehicles/equipment and non-Waste Handling vehicle/equipment operation within 25 feet of the CH Waste Face, operation in the VEZ, and/or operation in the Waste Shaft Station when CH Waste is present: • Brake operation • Steering • No excessive leaks • Light(s) and horn operate • Fluid levels within operating range • Cleanliness
Event(s) Where Pre-operational Checks of Vehicles/Equipment Control are Credited:		
CH/RH-UG-01-001a	CH/RH-UG-01-002a1	CH/RH-UG-01-002a2	CH/RH-UG-01-002a3
CH/RH-UG-01-004a	CH/RH-UG-01-005a2	CH/RH-UG-01-007a1	CH/RH-UG-01-007a2
CH/RH-UG-01-007a3	CH/RH-UG-01-007a4	CH/RH-UG-01-007a5	CH/RH-UG-01-007a6
CH-UG-01-001a	CH-UG-01-002a1	CH-UG-01-002a2	CH-UG-01-002a3
CH-UG-01-003a1	CH-UG-01-003a2		
Limit of Two Liquid-fueled Vehicles/Equipment within 25 feet of Contact-Handled Waste Face (Section 4.5.2)		
To prevent vehicle/equipment pool fires involving CH Waste Containers by limiting the number of liquid-fueled vehicles/equipment near the CH Waste Face; thereby reducing the likelihood for pool fires due to vehicular collisions.	The number of liquid-fueled vehicles/equipment within 25 feet of the CH Waste Face is limited to two.	No more than two liquid-fueled vehicles/equipment shall be present within 25 feet of the CH Waste Face.

Safety Functions	Functional Requirements	Performance Criteria
Event(s) Where Limit of Two Liquid-fueled Vehicles/Equipment within 25 feet of CH Waste Face Control is Credited: CH/RH-UG-01-004a CH-UG-01-003a1		
Attendance of Liquid-fueled Vehicles/Equipment in the Underground (Section 4.5.3)		
To prevent vehicle/equipment pool fires involving CH Waste Containers by assuring personnel are observant of the activities and can readily respond to upset conditions to reduce the likelihood for pool fires, and to alert UG facility workers of conditions potentially requiring their evacuation in order to reduce their consequences.	Liquid-fueled vehicles/equipment are Attended in the Waste Shaft Station when transporting CH Waste to or from the VEZ, when transporting CH Waste in the VEZ, when transporting CH Waste between the VEZ and the CH Waste Face, and within 25 feet of the CH Waste Face.	Liquid-fueled vehicles/equipment shall be Attended in the Waste Shaft Station when transporting CH Waste to or from the VEZ, when transporting CH Waste in the VEZ, when transporting CH Waste between the VEZ and the CH Waste Face, and within 25 feet of the CH Waste Face.
Event(s) Where Attendance of Liquid-fueled Vehicles/Equipment in the UG Control is Credited: CH/RH-UG-01-001a CH/RH-UG-01-002a1 CH/RH-UG-01-002a2 CH/RH-UG-01-002a3 CH/RH-UG-01-004a CH/RH-UG-01-005a2 CH/RH-UG-01-007a1 CH/RH-UG-01-007a2 CH/RH-UG-01-007a3 CH/RH-UG-01-007a4 CH/RH-UG-01-007a5 CH/RH-UG-01-007a6 CH/RH-UG-02-001a CH/RH-UG-02-002a2 CH/RH-UG-02-002a3 CH-UG-01-001a CH-UG-01-002a1 CH-UG-01-002a2 CH-UG-01-002a3 CH-UG-01-003a1 CH-UG-01-003a2		
Aboveground Liquid-fueled Vehicles/Equipment Prohibition (Section 4.5.4)		
To prevent fuel pool fires from affecting CH Waste, liquid-fueled vehicles/equipment are prohibited in the CH Bay and/or Room 108, thereby reducing the likelihood of a fuel pool fire by the removal of a primary source of liquid-fuel.	Liquid-fueled vehicles/equipment are prohibited in the CH Bay and/or Room 108 when CH Waste is outside a closed Type B Shipping Package.	Liquid-fueled vehicles/equipment shall not be present in the CH Bay and/or Room 108 when CH Waste is present and not in a closed Type B Shipping Package.
To prevent fuel pool fires from affecting CH Waste, liquid-fueled vehicles/equipment are prohibited in the Waste Shaft Access Area, thereby reducing the likelihood of a fuel pool fire by the removal of a primary source of liquid-fuel.	Liquid-fueled vehicles/equipment are prohibited in the Waste Shaft Access Area (including the FCLR, Waste Shaft Collar Room, and CLR) when CH Waste is present.	Liquid-fueled vehicles/equipment shall not be present in the Waste Shaft Access Area when CH Waste is present.
Event(s) Where Aboveground Liquid-fueled Vehicles/Equipment Prohibition Control is Credited: CH/RH-UG-01-05a1 CH-WHB-01-001a1 CH-WHB-01-001a2		

Safety Functions	Functional Requirements	Performance Criteria
Vehicle Exclusion Zone (Section 4.5.5)		
To prevent collisions and fires by restricting the number and operation of UG vehicles during CH Waste transport, thereby reducing the likelihood for pool fires due to leaks and/or collisions.	UG Liquid-fueled vehicles/equipment shall be controlled by establishing an area surrounding the waste transport vehicle that is free from interactions with other vehicles containing liquid-combustibles.	A VEZ (i.e., area defined by the distance between the leading edge of the lead escort vehicle and the trailing edge of the lag escort vehicle and the nominal width of the drift) shall be established and maintained around the TRU Waste being transported, shall prevent other vehicles/equipment from entering the VEZ except for repair, replacement, or CH Waste Transfer, and shall be maintained for the duration of the transport.
Event(s) Where VEZ is Credited: CH/RH-UG-01-002a1 CH/RH-UG-01-002a2 CH/RH-UG-01-007a3 CH/RH-UG-01-007a4 CH-UG-01-001a CH-UG-01-002a1		
Underground Lube Truck Operations (Section 4.5.6)		
To prevent a large fuel pool fire within 200 feet of the CH Waste Face in an active panel and to prevent a large pool fire within 200 feet of the Waste Shaft Station when CH Waste is present in the Waste Shaft Station; thereby reducing the likelihood of a pool fire by prohibiting the large total fuel source of the UG Lube Truck from entry into these areas.	An UG Lube Truck shall be kept at a distance sufficiently away from CH Waste such that a pool fire will not involve CH Waste.	A UG Lube Truck shall not be present within 200 feet of the CH Waste Face in an active panel. An UG Lube Truck shall not be in the Lube Truck Exclusion Zone when CH Waste is present.
Event(s) Where UG Lube Truck Operations Control is Credited: CH/RH-UG-01-007a1 CH/RH-UG-01-007a2 CH/RH-UG-01-007a5 CH/RH-UG-01-007a6		
Waste Conveyance Operations (Section 4.5.7)		
To prevent vehicles, equipment, and/or loads from dropping down an open Waste Shaft and impacting Waste Containers by reducing the likelihood of vehicle/equipment drops down the shaft through requiring the presence of the conveyance when preparing to load or off-load, and requiring access to the shaft to be prohibited when Waste is being moved in the Waste Shaft.	Ensure that access to the Waste Shaft from the collar is prevented if the Waste Conveyance is not present at the Waste Shaft Collar.	The Waste Shaft Conveyance shall be present at the Waste Shaft Collar prior to moving Waste into or out of the Waste Shaft Collar Room. Waste Shaft Access Doors 155 and 156 shall be closed when Waste is being moved in the Waste Shaft.

Safety Functions	Functional Requirements	Performance Criteria
	Ensure that the Waste Conveyance is present at the Waste Shaft Station prior to Waste load being present (uploading) or is present until the Waste load is moving away from the Waste Conveyance (downloading).	The Waste Shaft Conveyance shall be present at the Waste Shaft Station prior to Waste load entering the Waste Shaft Station when uploading.
		The Waste Shaft Conveyance shall remain at the Waste Shaft Station until Waste is loaded onto the Waste transporter and the transporter is moving away from the Waste Shaft.
Event(s) Where Waste Conveyance Operations Control is Credited: CH/RH-UG-01-005a1 CH/RH-UG-01-005a2 CH/RH-UG-10-005a		
WIPP Waste Acceptance Criteria (Section 4.5.8)		
To protect the assumptions of the safety analysis as to the nature, quantity, and confinement of TRU Waste shipped to WIPP.	WIPP WAC requirements include controls on treatment and packaging of waste to prevent internal fires, deflagrations / explosions / over-pressurization, and chemical exothermic reactions that can breach the confinement of the Waste Container.	All objectives, performance and acceptance criteria for treatment and packaging of waste specified in the Technical Review Program Technical Review Plan shall be met.
		All objectives, performance, and acceptance criteria for characterization and certification specified in the Central Characterization Program (CCP) TRU Waste Characterization Quality Assurance (QA) Project Plan shall be met.
	Exclude waste streams that contain oxidizers, have the characteristic of reactivity, and contain chemically incompatible materials, and excludes waste streams packaged in Pipe Overpack Containers (POCs) and Criticality Control Overpacks (CCOs) that contain combustibles.	WAC excludes the shipment of waste streams having the Resource Conservation and Recovery Act of 1976 characteristic of ignitability, which includes prohibiting untreated oxidizers, and waste streams containing untreated materials having the RCRA characteristic of reactivity, and requires generator sites to document treatment for these characteristics and chemical compatibility on a waste stream basis. WAC excludes waste streams packaged in POCs and CCOs that contain combustibles.

Safety Functions	Functional Requirements	Performance Criteria	
Event(s) Where WIPP Waste Acceptance Criteria Control is Credited:			
CH/RH-OA-14-002A	CH/RH-UG-01-001a	CH/RH-UG-01-002a1	CH/RH-UG-01-002a2
CH/RH-UG-01-002a3	CH/RH-UG-01-004a	CH/RH-UG-01-005a1	CH/RH-UG-01-005a2
CH/RH-UG-01-007a1	CH/RH-UG-01-007a2	CH/RH-UG-01-007a3	CH/RH-UG-01-007a4
CH/RH-UG-01-007a5	CH/RH-UG-01-007a6	CH/RH-UG-02-001a	CH/RH-UG-02-002a1
CH/RH-UG-02-002a2	CH/RH-UG-02-002a3	CH/RH-UG-02-002a4	CH/RH-UG-05-002a
CH/RH-UG-05-004a	CH/RH-UG-05-005a	CH/RH-UG-06-001a	CH/RH-UG-09-001a
CH/RH-UG-09-002a	CH/RH-UG-09-003a	CH/RH-UG-10-002a	CH/RH-UG-10-003a
CH/RH-UG-10-004a	CH/RH-UG-10-005a	CH/RH-UG-10-006a	CH/RH-UG-10-009a
CH/RH-UG-10-010a	CH/RH-UG-13-001a	CH/RH-UG-13-002a	CH/RH-UG-14-001a
CH/RH-UG-14-003a	CH/RH-UG-24-001a	CH/RH-UG-25-001a	CH/RH-UG-26-001a
CH/RH-UG-26-002a	CH/RH-UG-28-001a	CH/RH-UG-30-001a1	CH/RH-UG-30-001a2
CH/RH-WHB-01-001a	CH/RH-WHB-02-001a	CH/RH-WHB-02-002a	CH/RH-WHB-04-001a
CH/RH-WHB-04-002a	CH/RH-WHB-04-003a	CH/RH-WHB-05-003a	CH/RH-WHB-09-001a
CH/RH-WHB-09-002a	CH/RH-WHB-10-001a	CH/RH-WHB-10-002a1	CH/RH-WHB-13-001a1
CH/RH-WHB-13-001a2	CH/RH-WHB-13-002a	CH/RH-WHB-15-002a	CH/RH-WHB-17-001a
CH/RH-WHB-19-001a	CH/RH-WHB-20-001a	CH/RH-WHB-20-002a	CH/RH-WHB-21-001a
CH/RH-WHB-21-002a	CH/RH-WHB-22-001a	CH/RH-WHB-22-002a	CH/RH-WHB-23-001a
CH/RH-WHB-24-001a	CH/RH-WHB-25-001a	CH/RH-WHB-26-001a	CH/RH-WHB-26-002a
CH/RH-WHB-28-001a1	CH/RH-WHB-28-001a2	CH/RH-WHB-29-001a	CH-UG-01-001a
CH-UG-01-002a1	CH-UG-01-002a2	CH-UG-01-002a3	CH-UG-01-003a1
CH-UG-01-003a2	CH-UG-06-001a	CH-UG-06-002a	CH-WHB-01-001a1
CH-WHB-01-001a2	CH-WHB-02-001a	CH-WHB-03-001a	CH-WHB-04-001a
CH-WHB-04-005a	CH-WHB-05-001a	CH-WHB-06-001a	CH-WHB-09-001a
CH-WHB-09-003a	CH-WHB-10-001a	CH-WHB-10-002a	CH-WHB-10-003a
RH-UG-01-001a1	RH-UG-01-001a2	RH-UG-01-002a1	RH-UG-01-002a2
RH-UG-01-003a	RH-UG-02-002a	RH-UG-04-002a	RH-UG-06-001a
RH-UG-10-001a	RH-UG-10-002a	RH-WHB-01-001a	RH-WHB-01-002a
RH-WHB-01-006a	RH-WHB-02-001a	RH-WHB-03-001a	RH-WHB-04-002a
RH-WHB-06-001a	RH-WHB-06-002a	RH-WHB-09-001a	RH-WHB-09-003a
RH-WHB-10-001a	RH-WHB-10-002a	RH-WHB-10-003a1	RH-WHB-10-003a2
RH-WHB-10-004a	RH-WHB-10-005a	RH-WHB-10-006a	RH-WHB-10-007a
RH-WHB-10-008a	RH-WHB-10-010a	RH-WHB-14-002a	

Safety Functions	Functional Requirements	Performance Criteria
Transuranic Waste Outside the Waste Handling Building (Section 4.5.9)		
To prevent the release of radiological material due to fires, explosions, collisions, and/or NPH events when TRU Waste (excluding site-derived TRU Waste) is located outside of the WHB by reducing the likelihood for TRU Waste Containers to not be protected by a Type B Shipping Package when outside of the WHB.	TRU Waste Containers, excluding site-derived TRU Waste, must be in a closed Type B Shipping Package when above ground and outside the WHB.	TRU Waste, excluding site-derived TRU Waste, aboveground and outside the WHB shall be in a closed Type B Shipping Package.
Event(s) Where TRU Waste Outside the WHB is Credited: CH/RH-EXT-18-001a CH/RH-OA-01-002a CH/RH-OA-02-001a CH/RH-OA-02-002a CH/RH-OA-05-001a CH/RH-OA-06-001a CH/RH-OA-09-001a CH/RH-OA-09-002a CH/RH-OA-10-002a CH/RH-OA-15-001a CH/RH-OA-16-001a CH/RH-OA-17-001a CH/RH-OA-19-001a CH/RH-OA-20-001a CH/RH-OA-21-001a CH/RH-OA-21-002a CH/RH-OA-22-001a CH/RH-OA-22-002a CH/RH-OA-23-001a CH/RH-OA-24-001a CH/RH-OA-25-001a CH/RH-OA-26-001a		
Fuel Tanker Prohibition (Section 4.5.10)		
To prevent tanker truck pool fires involving TRU Waste Containers by ensuring that Fuel Tankers are precluded from the WHB Parking Area Unit, thereby reducing the likelihood for a pool fire involving a Fuel Tanker.	Fuel tanker prohibited from entering WHB Parking Area Unit.	Fuel tankers shall not be present in the WHB Parking Area Unit.
Event(s) Where Fuel Tanker Prohibition is Credited: CH/RH-WHB-04-002a		
Contact-Handled Bay Alternative Barrier Provision (Section 4.5.11)		
To reduce the likelihood for release of radiological material from CH Waste in the WHB due to impacts by vehicles and/or fires adjacent to the southwest wall of the CH Bay by maintaining control of liquid-fueled vehicles/equipment in and around the exclusion zone when the concrete Vehicle Barriers are not fully installed.	Liquid-fueled vehicles/equipment shall be Attended when inside the exclusion zone footprint as defined by the position of the Vehicle Barriers as described in Section 4.4.14.	Liquid-fueled vehicles/equipment shall be Attended if inside the exclusion zone defined by the barriers.
	Liquid-fueled vehicles/equipment in the WHB Parking Area Unit shall be Attended when being moved and the Vehicle Barriers (Section 4.4.14) are not fully installed.	When the Vehicle Barriers (Section 4.4.14) are not fully installed, liquid-fueled vehicles/equipment shall be Attended when being moved in the WHB Parking Area Unit.
Event(s) Where CH Bay Alternative Barrier Provision is Credited: CH/RH-WHB-04-002a		

Safety Functions	Functional Requirements	Performance Criteria
Real-time Airborne Monitoring at Panel 6 and Panel 7 Isolation Bulkheads (Section 4.5.12)		
To mitigate the potential consequences of a radiological release from an exothermic chemical reaction of non-compliant containers in Panel 6 and/or Panel 7, Room 7, by detecting and promptly alerting facility workers in the applicable areas of elevated airborne radiological activity outside of the Isolation Bulkheads.	Real-time airborne radiological monitoring of the applicable areas outside Panel 6 and Panel 7, Room 7 Isolation Bulkheads shall be conducted with methods that provide real-time detection and promptly alert workers to high airborne radioactive concentrations (i.e., in excess of acceptable exposure limits established in the WIPP 10 CFR 835 compliant Radiation Protection Program (RPP)).	Real-Time Monitoring of airborne radiological material in accordance with the WIPP RPP satisfying the 10 CFR 835 exposure limits shall be provided whenever one or more of the following areas are occupied. • Drift S-2180 and all areas south of Drift S-2180. • E-300 between S-2180 and the Exhaust Shaft. • Areas determined to be within the exhaust path of Panel 6 and Panel 7, Room 7 following changes in the ventilation configuration. Notification of an elevated airborne radiological concentration will be provided per the WIPP notification requirements to alert workers to elevated airborne activity levels.
Event(s) Where Real-time Monitoring at Panel 6 and Panel 7 Isolation Bulkheads is Credited: CH-UG-06-002a		
Attendance of Vehicles/Equipment in the RH Bay (Section 4.5.13)		
To prevent pool fires that could potentially degrade of WHB structural steel columns resulting in a building collapse and release of radiological material from CH Waste containers in the WHB by assuring personnel are observant of the activities and can readily respond to upset conditions to reduce the likelihood for pool fires.	Vehicles/equipment with liquid-combustible capacity are Attended in the RH Bay when CH Waste is present in the CH Bay.	Vehicles/equipment with ≥ 25 gallons of combustible-liquid shall be Attended in the RH Bay when CH Waste is present in the CH Bay outside of Type B Shipping Packages.
Event(s) Where Attendance of Vehicles/Equipment in the RH Bay is Credited: CH/RH-WHB-04-001a		

4.5.1 Pre-operational Checks of Vehicles/Equipment in Proximity to Contact-Handled Waste

The pre-operational check of Vehicles/Equipment in proximity to CH Waste control is established to reduce the likelihood of pool fires involving CH Waste. This is accomplished by ensuring that UG Waste Handling Vehicles/Equipment and UG non-Waste Handling Vehicles/equipment approaching within 25 feet of the CH Waste Face, operating in the VEZ, and/or in the Waste Shaft Station when CH Waste is present, are checked for conditions such as braking, steering, leaks, and cleanliness prior to being permitted to operate near CH Waste. The pre-operational check of Vehicles/Equipment in proximity to CH Waste is selected as a SS control.

4.5.1.1 Safety Function

The Safety Function of the Pre-operational Checks of Vehicles/Equipment in proximity to CH Waste is to prevent vehicle/equipment pool fires involving CH Waste Containers by ensuring vehicles/equipment operating near CH Waste are checked for such conditions as braking, steering, leaks, and cleanliness prior to being permitted to operate near CH Waste to reduce the likelihood of pool fire formation due to leaks and/or collisions.

4.5.1.2 Specific Administrative Control Description

The operation of liquid-fueled vehicles and/or equipment is required for transporting and emplacement of TRU Waste Containers as well as UG maintenance. These operations present the opportunity for radiological material release from vehicle/equipment fires resulting from exposure to liquid-combustibles and ignition sources. The use of liquid-fueled vehicles/equipment in close proximity to TRU Waste Containers is required by the activities at WIPP and no limited set of practical and reliable SSCs is available to prevent the occurrence of these events. Therefore, Pre-operational Checks of Vehicles/ Equipment that operate in proximity of CH Waste Containers is designated as a SAC since engineered controls are not available to prevent occurrence of events requiring SS protection.

The control, Pre-operational Checks of Vehicles/Equipment in proximity to CH Waste, includes the elements listed in Table 4.5.1-1. This table provides a justification for why an SSC was not selected and identifies the administrative action to accomplish the element.

Table 4.5.1-1. Justification for Specific Administrative Control versus Structures, Systems, and Components for Pre-operational Checks of Vehicles/Equipment in Proximity of Contact-Handled Waste

Element	Justification	Administrative Action
Requires pre-operational checks of all Vehicles/Equipment within 25 feet of CH Waste Face, in the VEZ, and/or in the Waste Shaft Station when CH Waste is present.	No current means to examine vehicle/ equipment for degradation or abnormal operations other than hands-on inspection and operation.	Visual inspection and operation/ testing of UG vehicles/equipment prior to their operation in proximity to CH Waste.

Boundaries and Interfaces

The Pre-operational Checks of Vehicles/Equipment in proximity to CH Waste control does not rely on any SSCs to perform their Safety Functions. These checks include vehicles that have credited vehicle FSSs.

4.5.1.3 Functional Requirements

Table 4.5.1-2 restates the Safety Function and identifies its corresponding minimum functional requirements necessary to perform the stated Safety Function.

Table 4.5.1-2. Functional Requirements for Pre-operational Checks of Vehicles/Equipment in Proximity to Contact-Handled Waste

Safety Function	Functional Requirements
To prevent vehicle/equipment pool fires involving CH	Prior to operation Waste Handling vehicles/equipment

Safety Function	Functional Requirements
Waste Containers by ensuring vehicles/equipment operating near CH Waste are checked for such conditions as braking, steering, leaks, and cleanliness prior to being permitted to operate near CH Waste to reduce the likelihood of pool fire formation due to leaks and/or collisions.	and non-Waste Handling vehicles/equipment to be operated within 25 feet of the CH Waste Face, in the VEZ, or in the Waste Shaft Station when CH Waste is present, are inspected for leaks, braking, lights, audible horn, and steering, as applicable.

4.5.1.4 Specific Administrative Control Evaluation

This subsection provides the performance criteria for Pre-operational Checks of Vehicles/Equipment in proximity to CH Waste control that defines the control attributes necessary to meet the functional requirements listed in Table 4.5.1-2 and evaluates the capability to meet these performance criteria. The performance criteria and evaluations are provided in Table 4.5.1-3.

Table 4.5.1-3. Performance Criteria and Performance Evaluation for Pre-operational Checks of Vehicles/Equipment in Proximity of Contact-Handled Waste

Functional Requirements	Performance Criteria	Performance Evaluation
Prior to operation, Waste Handling vehicles/equipment and non-Waste Handling vehicles/ equipment to be operated within 25 feet of the CH Waste Face, in the VEZ, or in the Waste Shaft Station when CH Waste is present, are inspected for leaks, braking, lights, audible horn, and steering, as applicable.	As applicable, the following elements shall be verified prior to Waste Handling vehicles/equipment and non-Waste Handling vehicle/ equipment operation within 25 feet of the CH Waste Face, operation in the VEZ, and/or operation in the Waste Shaft Station when CH Waste is present: • Brake operation • Steering • No excessive leaks • Light(s) and horn operate • Fluid levels within operating range • Cleanliness	Verification of operational performance ensures that vehicles/ equipment are capable of being operated safely. Cleanliness ensures that the buildup of grease and oil will be minimal; thereby, not a contributor to fires. Performance of the described inspection of vehicles/equipment reduces the probability of fires and of collisions that may result in a pool fire. Checks of Vehicles/Equipment in proximity to CH Waste for proper operation such as braking, steering performance, functionality of driver safety systems such as lighting and horns, and vehicle conditions such as fluid levels, leaks, hose integrity, and cleanliness is a low complexity activity. No special equipment is required, no time constraints, and no adverse environmental conditions. Therefore, this administrative control can be reliably accomplished.

On this basis, it has been determined that the Pre-operational Checks of Vehicles/Equipment in Proximity of CH Waste control is capable of performing the Safety Function.

4.5.1.5 Technical Safety Requirements (TSRs)

The following specific attributes of the pre-operational check of liquid-fueled UG vehicles/equipment are required to be protected in the TSRs when the vehicle/equipment is to operate within 25 feet of a CH Waste Face, the Waste Shaft Station, or within a VEZ:

- Demonstration of adequate brake operation, as applicable.
- Demonstration of adequate steering operation, as applicable.
- No excessive fluid leaks, as applicable.
- Demonstration of operating lights and horn, as applicable.
- Verification that fluid levels within operating range, as applicable.
- Verification of acceptable cleanliness (minimal accumulation of oils/greases).

The term “as applicable” is necessary as some vehicles/equipment may not have each feature and therefore, the feature would not be available to test. For instance, the roof bolter does not have a horn and therefore, testing the horn would not apply.

4.5.2 Limit of Two Liquid-fueled Vehicles/Equipment within 25 feet of the CH Waste Face

The area around the CH Waste Face is limited which creates the potential for collisions involving liquid-fueled vehicles/equipment. To reduce the likelihood for such collisions and the potential for pool fires near CH Waste, the number of liquid-fueled vehicles/equipment operating within 25 feet of the CH Waste Face is limited to two. The Limit of Two Liquid-fueled Vehicles and/or Equipment within 25 feet of the CH Waste Face control is selected as a SS control.

4.5.2.1 Safety Function

The Safety Function of the Limit of Two Liquid-fueled Vehicles/Equipment within 25 feet of the CH Waste Face control is to prevent vehicle/equipment pool fires involving CH Waste Containers by limiting the number of liquid-fueled vehicles/equipment near the CH Waste Face; thereby reducing the likelihood for pool fires due to vehicular collisions.

4.5.2.2 Specific Administrative Control Description

The operation of liquid-fueled vehicles/equipment at WIPP is required for transporting, emplacement, or retrieval of CH Waste Containers. These operations present the opportunity for radiological material release due to vehicle/equipment pool fires resulting from the presence of liquid-fuel and ignition sources (e.g., hot surfaces, collision generated spark). The use of liquid-fueled vehicles/equipment in close proximity to the CH Waste Face is required by the activities at WIPP and no limited set of practical and reliable SSCs is available to prevent the occurrence of these events. Therefore, ACs are required to prevent the events and the control for limiting the number of liquid-fueled vehicles/equipment within 25 feet of the CH Waste Face is designated as a SAC since engineered controls are not available to prevent occurrence of events requiring SS protection.

The control of Liquid-fueled Vehicles/Equipment within 25 feet of the CH Waste Face Limited to Two includes the element listed in Table 4.5.2-1 which provides a justification for why an SSC was not selected and identifies the administrative action to accomplish the element.

Table 4.5.2-1. Justification for Specific Administrative Control versus Structures, Systems, and Components for Limit of Two Liquid-fueled Vehicles/Equipment with within 25 feet of the CH Waste Face

Element	Justification	Administrative Action
Limits the number and operation of liquid-fueled vehicles/equipment within 25 feet of the CH Waste Face to two.	No current means to detect number of liquid-fueled vehicles/equipment within 25 feet of the Waste Face other than visual. No current means to prevent entry of additional vehicles/equipment into the work area other than visual. Impractical to physically prevent access to area of activity.	Visual monitoring for number of liquid-fueled vehicles/equipment within 25 feet of the CH Waste Face.

Boundaries and Interfaces

The control of No More than Two Liquid-fueled Vehicles/Equipment with within 25 feet of the CH Waste Face does not rely on any SSCs to perform the Safety Functions.

4.5.2.3 Functional Requirements

Table 4.5.2-2 restates the Safety Function and identifies the corresponding minimum functional requirement necessary to perform the stated Safety Function.

Table 4.5.2-2. Functional Requirement for Limit of Two Liquid-fueled Vehicles/Equipment with within 25 feet of the CH Waste Face

Safety Function	Functional Requirements
To prevent vehicle/equipment pool fires involving CH Waste Containers by limiting the number of liquid-fueled vehicles/equipment near the Waste Face; thereby reducing the likelihood for pool fires due to vehicular collisions.	The number of liquid-fueled vehicles/equipment within 25 feet of the CH Waste Face is limited to two.

4.5.2.4 Specific Administrative Control Evaluation

This subsection provides the performance criteria for a limit of two liquid-fueled vehicles/equipment within 25 feet of the CH Waste Face control that defines the control attributes necessary to meet the functional requirements listed in Table 4.5.2-2 and evaluates the capability to meet the performance criteria. The performance criteria and evaluations for a limit of two liquid-fueled vehicles/equipment within 25 feet of the CH Waste Face are provided in Table 4.5.2-3.

Table 4.5.2-3. Performance Criteria and Performance Evaluation for Limit of Two Liquid-fueled Vehicles/Equipment with within 25 feet of the CH Waste Face

Functional Requirements	Performance Criteria	Performance Evaluation
The number of liquid-fueled vehicles/ equipment within 25 feet of the CH Waste Face is limited to two.	No more than two liquid-fueled vehicles/ equipment shall be present within 25 feet of the CH Waste Face.	One Waste Handling vehicle/equipment is required for waste emplacement. However, one Waste Handling vehicle/equipment and an additional vehicle/equipment may be required for waste retrieval. The UG vehicles/equipment are of robust construction, operating in a limited area, at low speeds, and with automatic FSSs installed. Additionally, the area is Attended to minimize the potential for collisions. Limiting the number of liquid-fueled vehicles/equipment within 25 feet of the CH Waste Face to no more than two prevents excessive vehicle/equipment congestion in this limited area thus reducing the probability of collisions that may result in a pool fire. This SAC is implemented procedurally. Underground Services (and Waste Operations, when they are in the Underground) perform this surveillance once per shift and Waste Operations, when they are in the Underground, perform the surveillance at the beginning of each shift and visually ensure the control is maintained during waste emplacement activities throughout the shift. The implementation of this AC is not complex. Waste Handling Operators are trained on the requirement, monitoring the number of liquid-fueled vehicles/equipment within 25 feet of the CH Waste Face is not difficult, no special equipment is needed, and there are no time constraints involved. Therefore, this AC can be reliably accomplished.

On this basis, it has been determined that the Limit of Two Liquid-fueled Vehicles/Equipment with within 25 feet of the CH Waste Face control is capable of performing the Safety Function.

4.5.2.5 Technical Safety Requirements (TSRs)

The following specific attribute is required to be protected in the TSRs:

- No more than two liquid-fueled vehicles/equipment shall be within 25 feet of the CH Waste Face.

4.5.3 Attendance of Liquid-fueled Vehicles/Equipment in the Underground

The Attendance of Liquid-fueled Vehicles/Equipment in the UG is established to ensure observance of vehicle/equipment operations to preclude involvement of CH Waste in pool fires, and to alert other UG facility workers in the event of conditions requiring their evacuation from the UG. The Attendant is responsible for observing the liquid-fueled vehicles/equipment for fuel/hydraulic leaks and other conditions which could lead to a pool fire when CH Waste is present, and to take actions to minimize UG facility worker consequences in the event that an adverse condition occurs. The Attendance of Liquid-fueled Vehicles/Equipment is selected as a SS control.

4.5.3.1 Safety Function

The Safety Function of the control for attendance of liquid-fueled vehicles/equipment in proximity to CH Waste Containers in the UG is to prevent vehicle/equipment fires involving CH Waste Containers by assuring personnel are observant of the activities and can readily respond to upset conditions to reduce the likelihood for pool fires, and to alert UG facility workers of conditions potentially requiring their evacuation to reduce their consequences.

4.5.3.2 Specific Administrative Control Description

The operation of liquid-fueled vehicles/equipment at WIPP is required for transporting, emplacement, or retrieval of CH Waste Containers. These operations present the opportunity for radiological material release due to vehicle/equipment pool fires resulting from the presence of liquid-fuel and ignition sources and/or impacts to the containers. The use of liquid-fueled vehicles/equipment in close proximity to CH Waste Containers is required by the activities at WIPP and no limited set of practical and reliable SSCs is available to prevent the occurrence of these events. Therefore, ACs are required to prevent the occurrence of an event and the control for attendance of liquid-fueled vehicles/equipment in the UG is designated as a SAC since engineered controls are not available to prevent occurrence of events requiring SS protection.

The control for attendance of liquid-fueled vehicles/equipment in the UG includes the elements listed in Table 4.5.3-1 which provides a justification for why an SSC was not selected and identifies the administrative action to accomplish the element.

Table 4.5.3-1. Justification for Specific Administrative Control versus Structures, Systems, and Components for Attendance of Liquid-fueled Vehicles/Equipment in the Underground

Element	Justification	Administrative Action
Requires liquid-fueled vehicles/ equipment to be Attended when: • Within the Waste Shaft Station when CH Waste is present; • Transporting CH Waste in the VEZ; • When transporting CH Waste between the VEZ and the CH Waste Face; and • Within 25 feet of the CH Waste Face	No current means to monitor and prevent adverse vehicle interaction other than visual. No current means to monitor for indications of fires other than visual. No current means to detect and initiate notification of upset condition other than visual and human response.	Monitoring of operations to prevent collisions. Visual monitoring to alert personnel of adverse conditions.

Boundaries and Interfaces

The control for Attendance of liquid-fueled Vehicles/Equipment in the UG does not rely on any SSCs to perform the Safety Functions.

4.5.3.3 Functional Requirements

Table 4.5.3-2 restates the Safety Function and identifies the corresponding minimum functional requirement necessary to perform the stated Safety Function.

Table 4.5.3-2. Functional Requirement for Attendance of Liquid-fueled Vehicles/Equipment in the Underground

Safety Function	Functional Requirements
To prevent vehicle/equipment fires involving CH Waste Containers by assuring personnel are observant of the activities and can readily respond to upset conditions to reduce the likelihood for pool fires, and to alert UG facility workers of conditions potentially requiring their evacuation to reduce their consequences.	Liquid-fueled vehicles/equipment are Attended in the Waste Shaft Station when transporting CH Waste to or from the VEZ, when transporting CH Waste in the VEZ, when transporting CH Waste between the VEZ and the CH Waste Face, and within 25 feet of the CH Waste Face.

4.5.3.4 Specific Administrative Control Evaluation

This subsection provides the performance criteria for attendance of liquid-fueled vehicles/equipment in the UG that defines the control attributes necessary to meet the functional requirements listed in Table 4.5.3-2 and evaluates the capability of the AC to meet these performance criteria. The performance criteria and evaluations for Attendance of Liquid-fueled Vehicles/Equipment in the UG are provided in Table 4.5.3-3.

Table 4.5.3-3. Performance Criteria and Performance Evaluation for Attendance of Liquid-fueled Vehicles/Equipment in the Underground

Functional Requirements	Performance Criteria	Performance Evaluation
Liquid-fueled vehicles/equipment are Attended in the Waste Shaft Station when transporting CH Waste to or from the VEZ, when transporting CH Waste in the VEZ, when transporting CH Waste between the VEZ and the CH Waste Face, and within 25 feet of the CH Waste Face.	Liquid-fueled vehicles/ equipment shall be Attended in the Waste Shaft Station when transporting CH Waste to or from the VEZ, when transporting CH Waste in the VEZ, when transporting CH Waste between the VEZ and the CH Waste Face, and within 25 feet of the CH Waste Face.	Attendance of liquid-fueled vehicles/equipment near CH Waste allows for controlling/monitoring for vehicle/equipment interactions and to take action should conditions warrant. Attendance of liquid-fueled vehicles/equipment within 25 feet of the CH Waste Face reduces the probability of collisions that may result in a pool fire. The implementation of this AC is not complex. Waste Handling Operators are trained on the requirement, monitoring liquid-fueled vehicles/equipment in the Waste Shaft Station when transporting CH Waste to the VEZ, when transporting CH Waste in the VEZ, when transporting CH Waste from the termination of the VEZ to the CH Waste Face, and within 25 feet of CH Waste Face is not difficult, no special equipment is needed, and there are no time constraints involved. Therefore, this AC can be reliably accomplished.

On this basis, it has been determined that the Attendance of Liquid-fueled Vehicles/Equipment in the UG control is capable of performing its Safety Function.

4.5.3.5 Technical Safety Requirements (TSRs)

The following specific attributes are required to be protected in the TSRs:

- Attended in the Waste Shaft Station when transporting CH Waste to or from the VEZ.
- Attended in the VEZ.

- Attended when transporting CH Waste between the VEZ and the CH Waste Face.
- Attended when less than 25 feet from the CH Waste Face.

4.5.4 Aboveground Liquid-fueled Vehicles/Equipment Prohibition

The Aboveground Liquid-fueled Vehicles/Equipment Prohibition control is established to prevent involvement of CH Waste in a pool fire. This is accomplished by prohibiting liquid-fueled vehicles and equipment from entering into the CH Bay, Room 108, and/or the Waste Shaft Access Area when CH Waste is present. The control of Aboveground Liquid-fueled Vehicles/Equipment Prohibition is selected as a SS control.

4.5.4.1 Safety Function

The credited Safety Functions of the Aboveground Liquid-fueled Vehicles/Equipment Prohibition control are as follows:

- To prevent fuel pool fires from affecting CH Waste, liquid-fueled vehicles/equipment are prohibited in the CH Bay and/or Room 108, thereby reducing the likelihood of a fuel pool fire by the removal of a primary source of liquid-fuel.
- To prevent fuel pool fires from affecting CH Waste, liquid-fueled vehicles/equipment are prohibited in the Waste Shaft Access Area, thereby reducing the likelihood of a fuel pool fire by the removal of a primary source of liquid-fuel.

4.5.4.2 Specific Administrative Control Description

The Aboveground Liquid-fueled Vehicles/Equipment Prohibition control prevents the involvement of CH Waste in a pool fire resulting from liquid-combustible leaks and/or spills due the presence of liquid-fueled vehicles and/or equipment. This is accomplished by prohibiting liquid-fueled vehicles/equipment from entry into the CH Bay, Room 108, and/or the Waste Shaft Access Area when CH Waste is present. Electric powered equipment with hydraulic systems is used for handling CH Waste payloads and is specifically excluded from this prohibition. This Aboveground Liquid-fueled Vehicles/Equipment Prohibition reduces the number of liquid-fuel sources, and therefore, the likelihood for a fuel pool fire, but does not prevent fuel pool fires.

The operation of liquid-fueled vehicles and/or equipment at WIPP is required for unloading and transporting of TRU Waste Containers. These operations present the opportunity for radiological material release due to vehicle/equipment fires resulting from the presence of liquid-combustibles and ignition sources and/or impacts to the containers. The use of vehicles/equipment in close proximity to CH Waste Containers is required by the activities at WIPP and no limited set of practical and reliable SSCs is available to prevent the occurrence of these events. Therefore, ACs are required to reduce the likelihood of occurrence and the Aboveground Liquid-fueled Vehicles/Equipment Prohibition control is designated as a SAC since engineered controls are not available to prevent occurrence of events requiring SS protection.

The Aboveground Liquid-fueled Vehicles/Equipment Prohibition control includes the elements listed in Table 4.5.4-1, which provides a justification for why an SSC was not selected and identifies the administrative action to accomplish the element.

Table 4.5.4-1. Justification of Specific Administrative Control versus Structures, Systems, and Components for Aboveground Liquid-fueled Vehicles/Equipment Prohibition Control

Program Element	Justification	Administrative Action
Requires liquid-fueled vehicles/ equipment to not be present in the CH Bay and/or, Room 108, when CH Waste is present outside of a closed Shipping Package.	No current means to detect CH Waste outside of a closed Shipping Package other than visual. No current means to detect liquid-fueled vehicles/equipment entering CH Bay and/or Room 108 other than visual. No current means to interlock access to CH Bay and/or Room 108 when CH Waste present outside of a closed Shipping Package. FSSs are not available on Waste Handling Equipment in the WHB.	Visual observation of CH Waste in less than fully closed Shipping Package. Visual observation that no liquid-fueled vehicles/equipment are in the area prior to opening a Type B Shipping Package. Administrative prevention of liquid-fueled vehicles/equipment from entering area when CH Waste is present.
Requires liquid-fueled vehicles/ equipment to not be present in the Waste Shaft Access Area (including the FCLR, Waste Shaft Collar Room, and CLR) when CH Waste is present.	No current means to detect CH Waste in Waste Shaft Access Area other than visual. No current means to detect liquid-fueled vehicles/equipment entering Waste Shaft Access Area other than visual. No current means to interlock access to the Waste Shaft Access Area when CH Waste is present FSSs are not available on Waste Handling Equipment in the WHB.	Visual observation of CH Waste in Waste Shaft Access Area. Visual observation that no liquid-fueled vehicles/equipment are in the area prior to bringing CH Waste into the Waste Shaft Access Area. Administrative prevention of liquid-fueled vehicles/equipment from entering area when CH Waste is present.

Boundaries and Interfaces

The Aboveground Liquid-fueled Vehicles/Equipment Prohibition control does not rely on any SSCs to perform the Safety Function.

4.5.4.3 Functional Requirements

Table 4.5.4-2 restates the Safety Functions and identifies the corresponding minimum functional requirements necessary to perform the stated Safety Functions.

Table 4.5.4-2. Functional Requirements for the Aboveground Liquid-fueled Vehicles/Equipment Prohibition Control

Safety Function	Functional Requirements
To prevent fuel pool fires from affecting CH Waste, liquid-fueled vehicles/equipment are prohibited in the CH Bay and/or Room 108, thereby reducing the likelihood of a fuel pool fire by the removal of a primary source of liquid-fuel.	Liquid-fueled vehicles/equipment are prohibited in the CH Bay and/or Room 108 when CH Waste is outside a closed Type B Shipping Package.
To prevent fuel pool fires from affecting CH Waste, liquid-fueled vehicles/equipment are prohibited in the Waste Shaft Access Area, thereby reducing the likelihood of a fuel pool fire by the removal of a primary source of liquid-fuel.	Liquid-fueled vehicles/equipment are prohibited in the Waste Shaft Access Area (including the FCLR, Waste Shaft Collar Room, and CLR) when CH Waste is present.

4.5.4.4 Specific Administrative Control Evaluation

This subsection provides the performance criteria for the Aboveground Liquid-fueled Vehicles/ Equipment Prohibition control that defines the control attributes necessary to meet the functional requirements listed in Table 4.5.4-2 and evaluates the capability to meet these performance criteria. The performance criteria and evaluations for the Aboveground Liquid-fueled Vehicles/Equipment Prohibition control are provided in Table 4.5.4-3.

Table 4.5.4-3. Performance Criteria and Performance Evaluation for the Aboveground Liquid-fueled Vehicle Prohibition Control

Functional Requirements	Performance Criteria	Performance Evaluation
Liquid-fueled vehicles/ equipment are prohibited in the CH Bay and/or Room 108 when CH Waste is outside a closed Type B Shipping Package.	Liquid-fueled vehicles/ equipment shall not be present in the CH Bay and/or Room 108 when CH Waste is present and not in a closed Type B Shipping Package.	Fuel pool fires involving CH Waste can result in High consequences to the co-located worker. Closed Type B Shipping Packages are robust and prevent the involvement of any contained CH Waste from a fire. Prohibiting liquid-fueled vehicles from the CH Bay and/or Room 108 removes the likely fuel pool source from the area. Ensuring liquid-fueled vehicles/equipment are not present in the CH Bay and/or Room 108 when CH Waste is not in a Type B Shipping Package is a low complexity activity that requires no special equipment with no time constraints, and no adverse work environmental conditions. Therefore, this AC can be reliably accomplished. This control does not prohibit electric vehicles/equipment that may contain hydraulic and lubrication fluids that could be involved in a pool fire. However, these fluids are high temperature hydraulic fluids which have a significantly higher flash point than diesel, and without an engine being present, then the high temperature ignition source is removed from the event. This vulnerability is mitigated with the SS WHB FSS.

Functional Requirements	Performance Criteria	Performance Evaluation
Liquid-fueled vehicles/ equipment are prohibited in the Waste Shaft Access Area (including the FCLR, Waste Shaft Collar Room, and CLR) when CH Waste is present.	Liquid-fueled vehicles/ equipment shall not be present in the Waste Shaft Access Area when CH Waste is present.	Fuel pool fires involving CH Waste can result in High consequences to the co-located worker. Prohibiting liquid-fueled vehicles from the Waste Shaft Access Area removes a likely fuel pool source from the area. Ensuring liquid-fueled vehicles/equipment are not present in the Waste Shaft Access Area when CH Waste is present prevents a potential pool fire by eliminating the source of the liquid fuel. This is a low complexity activity that requires no special equipment with no time constraints, and no adverse work environmental conditions. Therefore, this AC can be reliably accomplished. This control does not prohibit electric vehicles/equipment that may contain hydraulic and lubrication fluids that could be involved in a pool fire. However, these fluids are high temperature hydraulic fluids which have a significantly higher flash point than diesel, and without an engine being present, then the high temperature ignition source is removed from the event. This vulnerability is mitigated with the SS WHB FSS.

On this basis, it has been determined that the Aboveground Liquid-fueled Vehicles/Equipment Prohibition control is capable of performing its Safety Functions.

4.5.4.5 Technical Safety Requirements (TSRs)

The following specific attributes of the Aboveground Liquid-fueled Vehicles/Equipment Prohibition control are required to be protected in the TSRs:

- Liquid-fueled vehicles/equipment shall not be present in the CH Bay and/or Room 108 when CH Waste is present in these areas and not in a closed Type B Shipping Package.
- Liquid-fueled vehicles/equipment shall not be present in the Waste Shaft Access Area when CH Waste is present in the Waste Shaft Access Area.

4.5.5 Vehicle Exclusion Zone

TRU Waste is moved along a Waste Transport Path within a VEZ which is defined as the area between the leading edge of the lead escort vehicle and the trailing edge of the lag escort vehicle and the nominal width of the drift. The Lead and Lag vehicles are responsible for maintaining a clear path for the Transport Vehicle. The lead and lag escort vehicles are not liquid-fueled vehicles. Other liquid-fueled vehicles may enter the VEZ if required to repair the transport vehicle or to transfer the waste to another transport vehicle. The VEZ is selected as a SS control.

4.5.5.1 Safety Function

The Safety Function of the VEZ control is to prevent collisions and fires by restricting the number and operation of UG vehicles during CH Waste transport, thereby reducing the likelihood for pool fires due to leaks and/or collisions.

4.5.5.2 Specific Administrative Control Description

The operation of vehicles and/or equipment at WIPP is required for unloading, transporting, and emplacement of TRU Waste Containers. These operations present the opportunity for radiological material release due to vehicle/equipment fires resulting from the presence of liquid-combustibles and ignition sources and/or impacts to the containers. The use of vehicles/equipment in close proximity to CH Waste Containers is required by the activities at WIPP and no limited set of practical and reliable SSCs is available to prevent the occurrence of these events. The Waste Transport Path is the route between the Waste Shaft Station entry point into the E-140 Drift and the active Disposal Room. A VEZ is established and moves with the waste transport vehicle along a Transport Path. The VEZ is defined as the area between the leading edge of the lead escort vehicle and the trailing edge of the lag escort vehicle and the nominal width of the drift. The lead and lag escort vehicles are not liquid-fueled vehicles. Other liquid-fueled vehicles may enter the VEZ if required to repair the transport vehicle or to transfer the waste to another transport vehicle. The lead and lag escorts are responsible for ensuring the safe movement of the CH Waste between the Waste Shaft Station and the designated off-loading point. Therefore, ACs are required to reduce the likelihood of occurrence and the VEZ control is designated as a SAC since engineered controls are not available to prevent occurrence of events requiring SS protection.

The VEZ control includes the element listed in Table 4.5.4-1, which provides a justification for the control and the expected administrative action.

Table 4.5.5-1. Justification of Specific Administrative Control versus Structures, Systems, and Components for Vehicle Exclusion Zone

Program Element	Justification	Administrative Action
Restricts the number and operation of UG vehicles/equipment during transport of CH Waste.	No current means to detect number of vehicles/equipment other than procedural controls. No current means to prevent entry of additional vehicles/equipment other than operator awareness. Impractical to physically prevent vehicle access during CH Waste transport.	Lead and lag escort vehicles monitor liquid-fueled vehicles/equipment motion during actual transport and prohibit incursions into VEZ.

Boundaries and Interfaces

The VEZ control does not rely on any SSCs to perform its Safety Function.

4.5.5.3 Functional Requirements

Table 4.5.5-2 restates the Safety Function and identifies its corresponding minimum functional requirement necessary to perform the stated Safety Function.

Table 4.5.5-2. Functional Requirement for the Vehicle Exclusion Zone

Safety Function	Functional Requirements
To prevent collisions and fires by restricting the number and operation of UG vehicles during CH Waste transport, thereby reducing the likelihood for pool fires due to leaks and/or collisions.	UG Liquid-fueled vehicles/equipment shall be controlled by establishing an area surrounding the waste transport vehicle that is free from interactions with other vehicles containing liquid-combustibles.

4.5.5.4 Specific Administrative Control Evaluation

This subsection provides the performance criteria for the VEZ control that defines the control attributes necessary to meet the functional requirements listed in Table 4.5.5-2, and evaluates the capability to meet these performance criteria. The performance criteria and evaluations for the VEZ control are provided in Table 4.5.5-3.

Table 4.5.5-3. Performance Criteria and Performance Evaluation for the Vehicle Exclusion Zone

Functional Requirements	Performance Criteria	Performance Evaluation
UG Liquid-fueled vehicles/equipment shall be controlled by establishing an area surrounding the waste transport vehicle that is free from interactions with other vehicles containing liquid-combustibles.	A VEZ (i.e., area defined by the distance between the leading edge of the lead escort vehicle and the trailing edge of the lag escort vehicle and the nominal width of drift) shall be established and maintained around the CH Waste being transported, shall prevent other vehicles/equipment from entering the VEZ except for repair, replacement, or CH Waste Transfer, and shall be maintained for the duration of the transport.	Establishment of a buffer zone about a loaded Facility Pallet during transit reduces the likelihood for collisions involving the CH Waste. Additionally, the Attendance of the VEZ ensures an individual is present to observe, respond, and notify in the event of a collision. The implementation of this AC is not complex. Waste Handling Operators are trained on the requirement, monitoring the VEZ during waste transport is not difficult, no special equipment is needed, and there are no time constraints involved. Therefore, this AC can be reliably accomplished. The VEZ is not required at the Waste Shaft Station as the station consists of a singular drift with only one access point from which a vehicle could approach the CH Waste transport. The VEZ is not required in the Disposal Room as it is limited in size thereby limiting the number of vehicles/equipment that could be present and also only has one access point. In the event that the Waste Transport Vehicle becomes disabled during the waste transfer, other vehicles/equipment may need to be brought into the VEZ to repair the original transport vehicle or to transfer the waste to another transport vehicle. While this increases the potential for collisions and/or leaks, the vehicles/ equipment are still required to have automatic FSSs (Section 4.4.2), and pre-operational checks (Section 4.5.1), and an Attendant (Section 4.5.3) is required. Therefore, the credited frequency reduction remains the same although one AC (i.e., limit of 1 liquid-fueled vehicle/equipment) is removed. Additionally, while the available fuel pool increases, the material at risk (MAR) remains the same and therefore, consequences would remain the same.

Functional Requirements	Performance Criteria	Performance Evaluation
		Also, in the event that a contaminated zone boundary is required to be crossed, the waste load may be transferred to another transport vehicle at that boundary. Other vehicles/equipment are required to enter the VEZ to complete the transfer of waste. While this increases the potential for collisions and/or leaks, the vehicles/equipment are still required to have automatic FSSs, and pre-operational checks, and an Attendant is required. Therefore, the credited frequency reduction remains the same although one AC (i.e., limit of 1 liquid-fueled vehicle/equipment) is removed. Additionally, while the available fuel pool increases, the MAR remains the same and therefore, consequences would remain the same.

On this basis, it has been determined that the VEZ control is capable of performing the Safety Function.

4.5.5.5 Technical Safety Requirements (TSRs)

The following specific attribute of the VEZ control is required to be protected in the TSRs:

- A VEZ shall be established around the CH Waste prior to its transport in the UG and maintained for the duration of the transport.
- Additional vehicles that may enter the VEZ for repair, replacement, or CH Waste Transfer shall be attended.

4.5.6 Underground Lube Truck Operations

The UG Lube Truck Operations control is established to ensure that this vehicle with a capacity of greater than 500 gallons of combustible liquids is prevented from being within 200 feet of the CH Waste Face in an active panel and excluded from the Waste Shaft Station and E-140 drift between Bulkheads 310 and 415 when CH Waste is present in the Waste Shaft Station. The control of Lube Truck operations is selected as a SS control.

4.5.6.1 Safety Function

The Safety Function of the Lube Truck Operations control is to prevent a large fuel pool fire within 200 feet of the CH Waste Face in an active panel and to prevent a large pool fire within 200 feet of the Waste Shaft Station when CH Waste is present in the Waste Shaft Station, thereby reducing the likelihood of a pool fire by prohibiting the large total fuel source of the UG Lube Truck from entry into these areas.

4.5.6.2 Specific Administrative Control Description

The operation of vehicles and/or equipment at WIPP is required for unloading, transporting, and emplacement of Waste Containers. Additionally, mining equipment and other support vehicles or equipment are used in the UG. These vehicles may require servicing (e.g., lubrication, hydraulic fluid, or diesel fuel) in various areas of the UG. The UG Lube Trucks are required to provide the services for the UG vehicles in areas away from the Maintenance Area or the UG Refueling Area. A Lube Truck has a capacity of greater than 500 gallons of combustible liquids.

A Lube Truck may be required in an active panel to support operations in the area, although typically the Lube Truck will not be within 200 feet of the CH Waste Face. If a panel or room has been closed (i.e., there is a closure barrier), entry into the panel or room is prevented. The enclosure barrier can be either of the types described in Section 2.4.4.6 or 2.4.4.6.1. Based on their construction and the distances from the CH Waste Face, the barriers are qualitatively judged to protect the Waste Face from operational events such as fires and vehicle collisions as the barriers are substantial and robust and prevent entry into the closed panel or room.

A Lube Truck may be required to be in the Waste Shaft Station to support Operations in this area. To protect the safety analysis, a Lube Truck is not allowed within 200 feet of the Waste Shaft Station when CH Waste is present. To ensure the Lube Truck does not enter the Waste Shaft Station when CH Waste is present, a Lube Truck Exclusion Zone (i.e., the Waste Shaft Station and all areas between Bulkhead 310 and Bulkhead 415), has been defined. If a Lube Truck is not in the Lube Truck Exclusion Zone, it will be at least 200 feet from the Waste Shaft Station when CH Waste is present. If CH Waste is not present, a Lube Truck may enter the Waste Shaft Station or the Lube Truck Exclusion Zone. The Waste Shaft Station Area includes the E-140/S-400 intersection and the portion of the S-400 drift from the E 140/S-400 intersection to the Waste Shaft.

The use of vehicles/equipment in close proximity to Waste Containers is required by the activities at WIPP and no limited set of practical and reliable SSCs is available to prevent the occurrence of these events. Lube Truck operations present the opportunity for a radiological material release due to vehicle/equipment fires resulting from the presence of combustible liquids and ignition sources and/or impacts to the containers. Therefore, an AC is required to prohibit a Lube Truck in areas where CH Waste is present. This control is designated as a SAC as engineered controls are not available to prevent occurrence of events requiring SS protection.

Lube Truck Operations include the element listed in Table 4.5.6-1 that provides a justification for each administrative element and the expected administrative action.

Table 4.5.6-1. Justification of Specific Administrative Control versus Structures, Systems, and Components for Underground Lube Truck Operations Control

Program Element	Justification	Administrative Action
Prohibits an UG Lube Truck from being within 200 feet of the CH Waste Face in an active panel, and prohibits entry into the Waste Shaft Station when CH Waste is present.	No current means to detect location of an UG Lube Truck other than visual. No current means to prevent an UG Lube Truck from being within 200 feet of the CH Waste Face, or the Waste Shaft Station other than by procedural controls. No current means to interlock access within 200 feet of the CH Waste Face, or the Waste Shaft Station with presence of an UG Lube Truck.	Visual observation for UG Lube Truck location. Administrative prevention of an UG Lube Truck from within 200 feet of the CH Waste Face in an active panel, and the Waste Shaft Station when CH Waste is present.

Boundaries and Interfaces

The UG Lube Truck Operations control does not rely on any SSCs to perform the Safety Function.

4.5.6.3 Functional Requirements

Table 4.5.6-2 restates the Safety Function and identifies the corresponding minimum functional requirement necessary to perform the stated Safety Function.

Table 4.5.6-2. Functional Requirements for the Underground Lube Truck Operations Control

Safety Function	Functional Requirements
To prevent a large fuel pool fire within 200 feet of the CH Waste Face in an active panel and to prevent a large pool fire in the Waste Shaft Station when CH Waste is present in the Waste Shaft Station; thereby reducing the likelihood of a pool fire by prohibiting the large total fuel source of the UG Lube Truck from entry into these areas.	An UG Lube Truck shall be kept at a distance sufficiently away from CH Waste such that a pool fire will not involve CH Waste.

4.5.6.4 Specific Administrative Control Evaluation

This subsection provides the performance criteria for the Lube Truck Operations control that defines the control attributes necessary to meet the functional requirements listed in Table 4.5.6-2 and evaluates the capability to meet these performance criteria. The performance criteria and evaluations for the Lube Truck Operations control are provided in Table 4.5.6-3.

Table 4.5.6-3. Performance Criteria and Performance Evaluation for the Lube Truck Operations Control

Functional Requirements	Performance Criteria	Performance Evaluation
An UG Lube Truck shall be kept at a distance sufficiently away from CH Waste such that a pool fire will not involve CH Waste.	An UG Lube Truck shall not be present within 200 feet of the CH Waste Face in an active panel.	Prohibiting a Lube Truck from being within 200 feet of the CH Waste Face in an active panel ensures that a pool fire involving the Lube Truck fuel capacity will not affect the CH Waste Face. The Lube Truck has a combined capacity of combustible fluids of greater than 500 gallons. WIPP-058, Revision 2, *DSA Supporting Calculations, Fuel Spill, HEPA Filter Plugging, and Compartment Over Pressurization*, concludes that a fuel spill in a 16-foot drift extends approximately 108 feet on either side of the spill. Additionally, a standoff distance of approximately 8 feet from the edge of the pool is sufficient to maintain the radiant heat flux to less than 15.9 kW/m^2 on the CH Waste containers. To ensure the total standoff distance calculated in WIPP-058 is protected, the distance for the safety analysis is conservatively established as 200 feet. Based on this evaluation, CH Waste cannot be affected by a pool fire when protected by the SAC restrictions. If a panel has been closed (i.e., there is a closure (isolation) barrier as described in DSA Chapter 2.0, Section 2.4.4.6 or 2.4.4.6.1), entry into the panel is prevented. Chapter 2.0 identifies that the substantial barrier and isolation bulkhead protect the Waste Face from operational events in the entries such as vehicle collisions and fires. The second barrier described in Chapter 2.0 is a 12-foot-thick block and mortar explosion-isolation wall. Panel closure also prevents events outside the panel from breaching Waste Containers inside the closed panel. The closure

Functional Requirements	Performance Criteria	Performance Evaluation
		(isolation) barriers are substantial and robust barriers that prevent entry into the closed panel, prevent a Lube Truck impact with the Waste Containers, and prevent a fire or combustible liquid spill outside the barriers from impacting the CH Waste in the closed panel. The barrier on the closed panel ensures that the Waste Face is physically at least 200 feet from the drift where the Lube Truck could be located. Based on their construction and the distances from the CH Waste Face, the barriers are qualitatively judged to protect the Waste Face from operational events such as fires and vehicle collisions involving the Lube Truck. Therefore, this LCO does not apply to a closed panel with an installed closure (isolation) barrier. The implementation of this AC is not complex. Waste Handling Operators and Maintenance personnel are trained on the requirement. Keeping the Lube Truck 200 feet from the CH Waste Face in an active panel, no special equipment is needed, and there are no time constraints involved. Therefore, this AC can be reliably accomplished.
	A UG Lube Truck shall not be in the Lube Truck Exclusion Zone when CH Waste is present.	This SAC establishes a Lube Truck Exclusion Zone as the Waste Shaft Station and all areas between Bulkhead 310 and Bulkhead 415. This ensures that a Lube Truck will be > 200 feet from any CH Waste that is in the Waste Shaft Station. A Lube Truck has a combined capacity of combustible fluids of greater than 500 gallons. WIPP-058, Revision 2, *DSA Supporting Calculations, Fuel Spill, HEPA Filter Plugging, and Compartment Over Pressurization*, concludes that a fuel spill in a 16-foot drift extends approximately 108 feet on either side of the spill. Additionally, a standoff distance of approximately 8 feet from the edge of the pool is sufficient to maintain the radiant heat flux to less than 15.9 kW/m^2 on the CH Waste containers. To ensure the total standoff distance calculated in WIPP-058 is protected, a Lube Truck is prevented from being in the Lube Truck Exclusion Zone. The implementation of this AC is not complex. Waste Handling Operators and Maintenance personnel are trained on the requirement. Keeping the Lube Truck out of the Waste Shaft Station is not difficult, no special equipment is needed, and there are no time constraints involved. Therefore, this AC can be reliably accomplished.

On this basis, it has been determined that the Lube Truck Operations control is capable of performing the Safety Function.

4.5.6.5 Technical Safety Requirements (TSRs)

The following specific attributes of the Lube Truck Operations control are required to be protected in the TSRs:

- UG Lube Truck shall be prohibited within 200 feet of the CH Waste Face in an active panel.

- UG Lube Truck shall be prohibited within the Lube Truck Exclusion Zone when CH Waste is present.

4.5.7 Waste Conveyance Operations

The Waste Conveyance Operations control is established to ensure that TRU Waste cannot be dropped down an open Waste Shaft and that vehicles/equipment or other loads cannot be dropped onto a Waste Conveyance loaded with TRU Waste. The control ensures the Waste Conveyance is present at the Waste Shaft Collar prior to the loading or unloading of TRU Waste at the Waste Shaft Collar. The control ensures the Waste Conveyance is present at the Waste Shaft Station prior to the unloading or loading of TRU Waste at the Waste Shaft Station. When TRU Waste is in transit between the Waste Shaft Collar and the Waste Shaft Station, Doors 155 and 156 are required to be closed. The Waste Shaft Conveyance shall remain at the Waste Shaft Station until the Waste is loaded onto the Waste transporter and the transporter is moving away from the Waste Shaft. The control of Waste Conveyance Operations is selected as a SS control.

4.5.7.1 Safety Function

The Safety Function of the Waste Conveyance Operations control is to prevent vehicles, equipment, and/or loads from dropping down an open Waste Shaft and impacting Waste Containers by reducing the likelihood of vehicle/equipment drops down the shaft through requiring the presence of the conveyance when preparing to load or off-load, and requiring access to the shaft to be prevented when Waste is being moved in the Waste Shaft.

4.5.7.2 Specific Administrative Control Description

The operation of vehicles and/or equipment at WIPP is required for unloading, transporting, and emplacement of TRU Waste Containers. These operations present the opportunity for a radiological material release due to impacts to the containers. The use of vehicles/equipment in close proximity to TRU Waste Containers is required by the activities at WIPP and no limited set of practical and reliable SSCs is available to prevent the occurrence of these events. Therefore, ACs are required to reduce the likelihood of occurrence and the Waste Conveyance Operations control is designated as a SAC since engineered controls are not available to prevent occurrence of events requiring SS protection.

CH and RH Waste Handling occurs in the Waste Shaft Access Area which consists of the FCLR, the CLR, and the Waste Shaft Collar Room. Pivot rails at the Waste Shaft Collar are located in the rails serving the CLR and in the rails serving the FCLR. The pivot rails must be in the horizontal position when loading or unloading the Waste Shaft Conveyance and in the vertical position anytime the Waste Shaft Conveyance is not at the CLR/FCLR level. When the Conveyance Loading Car or the Facility Transfer Vehicle (FTV) is loading or unloading CH Waste assemblies on the Waste Shaft Conveyance, the pivot rails serving the FCLR are in the vertical position; conversely, when the Facility Cask Transfer Car (FCTC) is loading or unloading the Waste Shaft Conveyance, the pivot rails serving the CLR are in the vertical position. The pivot rails are interlocked with the Waste Shaft Conveyance controls such that the Waste Conveyance cannot be operated until both sets of pivot rails are in the vertical position.

The Waste Shaft Collar is enclosed with a fence to prevent inadvertent access to the shaft. The fence has gates that are interlocked such that if a gate is open, the Waste Conveyance cannot be moved, or if the Waste Conveyance is moving and a gate is opened, the conveyance emergency stop is actuated. Another set of rails, embedded in the floor, extend from the south end of the RH Bay through a pair of thick steel doors separating the RH Bay and FCLR to a turntable in the FCLR. The turntable can be positioned such

that the rails can be used to guide the FCTC between the Facility Cask Rotating Device (FCRD) and the Waste Shaft Collar Room or between the RH Bay and the FCLR. There are rail stops in the RH Bay and at the FCRD.

The Waste Shaft Station is enclosed with a fence to prevent inadvertent access to the Waste Shaft. The fence has gates that are interlocked such that if a gate is open, the conveyance cannot be moved, or if the conveyance is moving and a gate is opened, the conveyance emergency stop is actuated. A set of rails, embedded in the floor, extend through the Waste Shaft Station to permit off-loading of RH Waste. For CH Waste, the Waste Shaft Station gates are opened and the UG Transporter backs up to the conveyance. The Facility Pallet is pulled onto the UG Transporter trailer and moved to the active Disposal Room.

The Waste Conveyance Operations control includes the elements listed in Table 4.5.7-1, which provides a justification for the control and the expected administrative action.

Table 4.5.7-1. Justification of Specific Administrative Control versus Structures, Systems, and Components for Waste Conveyance Operations Control

Program Element	Justification	Administrative Action
Prevent TRU Waste from dropping down an open Waste Shaft from the Waste Collar.	No current mechanical and/or instrumented interlocks prevent opening of Waste Collar access doors when the Waste Conveyance is present at the Waste Shaft Collar. Loading of the Waste Conveyance requires a series of operations to position and secure it prior to loading. This SAC provides an AC to ensure those operations have occurred.	Visual verification that conveyance is present at the Waste Shaft Collar prior to moving Waste into or out of the Waste Shaft Collar Area.
Prevent vehicles, equipment from dropping down an open Waste Shaft onto TRU Waste.	No current means to determine presence of TRU Waste in the Waste Shaft. No current mechanical and/or instrumented interlocks prevent opening of Waste Collar access doors with presence of loaded Waste Conveyance in Waste Shaft.	Notification that Waste Conveyance has been off-loaded at the Waste Shaft Station prior to allowing the opening of either Waste Collar access door (Door 155 or 156).
Prevent TRU Waste from dropping down an open Waste Shaft from the Waste Shaft Station.	No substantial means to prevent entry of Waste Transport into Waste Shaft Station when Waste Conveyance is not present.	Visual verification that conveyance is present and not permitted to move until CH Waste is removed from the Waste Shaft Conveyance.

While pivot rails and door interlocks exist for equipment related to preventing drops down an open Waste Shaft, the combination of these SSCs does not provide a complete set of SSCs that would reduce the likelihood of this event. This is due to there being no SSC control that is independent of human interface that would detect the presence or absence of TRU Waste in the Waste Shaft. A human interaction is necessary to “inform” the interlocks that the TRU Waste load has been removed from the Waste Conveyance when downloading, or TRU Waste is about to be loaded onto the Waste Conveyance if uploading, such that the interlocks around the Waste Shaft Collar can function. Therefore, one SSC or set

of SSCs is not available, independent of human action that could accomplish the Safety Function, thus requiring the Waste Conveyance Operations SAC.

Boundaries and Interfaces

The Waste Conveyance Operations control does not rely on any SSCs to perform its Safety Function. However, Waste Conveyance operation depends on its position being secured for loading or off-loading TRU Waste.

4.5.7.3 Functional Requirements

Table 4.5.7-2 restates the Safety Function and identifies its corresponding minimum functional requirements necessary to perform the stated Safety Function.

Table 4.5.7-2. Functional Requirements for the Waste Conveyance Operations Control

Safety Function	Functional Requirements
To prevent vehicles, equipment, and/or loads from dropping down an open Waste Shaft and impacting Waste Containers by reducing the likelihood of vehicle/equipment drops down the shaft through requiring the presence of the conveyance when preparing to load or off-load, and requiring access to the shaft to be prohibited when Waste is being moved in the Waste Shaft.	Ensure that access to the Waste Shaft from the collar is prevented if the Waste Conveyance is not present at the Waste Shaft Collar.
	Ensure that the Waste Conveyance is present at the Waste Shaft Station prior to Waste load being present (uploading) or is present until the Waste load is moving away from the Waste Conveyance (downloading).

4.5.7.4 Specific Administrative Control Evaluation

This subsection provides the performance criteria for the Waste Conveyance Operations control that define the control attributes necessary to meet the functional requirements listed in Table 4.5.7-2 and evaluates the capability to meet these performance criteria. The performance criteria and evaluations for the Waste Conveyance Operations control are provided in Table 4.5.7-3.

Table 4.5.7-3. Performance Criteria and Performance Evaluation for the Waste Conveyance Operations Control

Functional Requirements	Performance Criteria	Performance Evaluation
Ensure that access to the Waste Shaft from the collar is prevented if the Waste Conveyance is not present at the Waste Shaft Collar.	The Waste Shaft Conveyance shall be present at the Waste Shaft Collar prior to moving Waste into or out of the Waste Shaft Collar Room.	The presence of the Waste Conveyance at the Waste Shaft Collar before moving TRU Waste into the collar ensures that the TRU Waste cannot be dropped down an open Waste Shaft. The implementation of this AC is not complex. Operators (i.e., Shaft Tenders) are trained on the requirement. Ensuring Doors 155 and 156 closed until the Waste Conveyance is present is not difficult, no special equipment is needed, and there are no time constraints involved. Therefore, this AC can be reliably accomplished.

Functional Requirements	Performance Criteria	Performance Evaluation
	Waste Shaft Access Doors 155 and 156 shall be closed when Waste is being moved in the Waste Shaft.	Ensuring the Waste Shaft Access doors remain closed while TRU Waste is present in the Waste Shaft ensures that other vehicles/equipment or Waste cannot enter the collar area and drop onto a loaded conveyance. The implementation of this AC is not complex. Operators (i.e., Shaft Tenders) are trained on the requirement. Ensuring Doors 155 and 156 closed while TRU Waste is in the Waste Shaft is not difficult, no special equipment is needed, and there are no time constraints involved. Therefore, this AC can be reliably accomplished.
Ensure that the Waste Conveyance is present at the Waste Shaft Station prior to Waste load being present (uploading) or is present until the Waste load is moving away from the Waste Conveyance (downloading).	The Waste Shaft Conveyance shall be present at the Waste Shaft Station prior to a Waste load entering the Waste Shaft Station when uploading.	Requiring the Waste Conveyance to be present at the Waste Shaft Station prior to bringing a Waste load into the Waste Shaft Station for uploading prevents dropping a Waste load down an open Waste Shaft (i.e., the Waste Conveyance is not present allowing the opportunity for the Waste load to be dropped into the Waste Shaft sump). The implementation of this AC is not complex. Operators (i.e., Shaft Tenders) are trained on the requirement. Ensuring the Waste Conveyance is present at the Waste Shaft Station prior to bringing a Waste load into the Waste Shaft Station is not difficult, no special equipment is needed, and there are no time constraints involved. Therefore, this AC can be reliably accomplished.
	The Waste Shaft Conveyance shall remain at the Waste Shaft Station until the Waste is loaded onto the Waste transporter and the transporter is moving away from the Waste Shaft.	Maintaining the Waste Conveyance at the Waste Shaft Station until the Waste load is moving away from the Waste Shaft prevents dropping a Waste load down an open Waste Shaft (i.e., the Waste Conveyance has not been raised allowing the opportunity for a Waste load to drop into the Waste Shaft sump). Movement away from the Waste Shaft ensures the transport vehicle is in motion away from the Waste Shaft and toward the VEZ. The implementation of this AC is not complex. Operators (i.e., Shaft Tenders) are trained on the requirement. Ensuring the Waste Conveyance present at the Waste Shaft Station until the Waste load has been removed from the Waste Conveyance and the Waste is moving away from the Waste Shaft is not difficult, no special equipment is needed, and there are no time constraints involved. Therefore, this AC can be reliably accomplished.

On this basis, it has been determined that the Waste Conveyance Operations control is capable of performing its Safety Function.

4.5.7.5 Technical Safety Requirements (TSRs)

The following specific attributes of the Waste Conveyance Operations control are required to be protected in the TSRs:

- Waste Shaft Conveyance shall be present at the Waste Shaft Collar prior to moving TRU Waste into or out of the Waste Shaft Collar Room.
- Waste Shaft Access Doors 155 and 156 shall be closed when TRU Waste is in the Waste Shaft.
- Waste Shaft Conveyance shall be present at the Waste Shaft Station prior to bringing TRU Waste into the Waste Shaft Station from the VEZ.
- Waste Shaft Conveyance shall remain at the Waste Shaft Station until the TRU Waste is removed from the Waste Conveyance and is moving away from the Waste Shaft.

4.5.8 WIPP Waste Acceptance Criteria

The WIPP WAC is credited as an IC in the accident analysis and is applicable to all waste to be received at WIPP and to the verification of certification for waste stored in the WHB prior to the February 2014 events. The WIPP WAC provides assurance that waste meets specific criteria for the containers in which it is packaged as well as the contents of each package, which reduces both the likelihood and consequences of adverse events. The WIPP WAC is selected as a SS control.

4.5.8.1 Safety Function

The Safety Function of the WIPP WAC is to protect the assumptions of the safety analysis as to the nature, quantity, and confinement of TRU Waste shipped to WIPP.

4.5.8.2 Specific Administrative Control Description

The WIPP WAC is credited as an IC in the accident analysis and is applicable to all waste to be received at WIPP. The WIPP WAC provides assurance that waste meets specific criteria for the containers in which it is packaged as well as the contents of each package, which reduces both the likelihood and consequences of adverse events. The allowed forms of packaging provide resistance to breach from adverse events (e.g., impacts, package compatibility with the waste, package integrity at increased temperature). Prohibiting incompatible and reactive materials reduces the likelihood of ignition sources (e.g., pyrophorics, oxidizers, water reactive chemicals, exothermic chemical reactions). Limiting flammable gas and volatile organic compound (VOC) concentrations in the innermost confinement layer reduces the likelihood of formation of combustible or flammable atmospheres within each container. Limiting curie content protects assumptions regarding the quantity of radiological material involved in an event and therefore, the consequences of such events.

All TRU Waste Containers stored in the UG as of implementation of this DSA, including known noncompliant containers, are located behind a 12-foot-thick block and mortar explosion-isolation wall or in a panel or room with an interim closure system. Emplaced waste behind closure panels is not subject to this SAC. This SAC applies to new waste shipments and waste currently stored in the WHB.

The WIPP WAC provides the allowed chemical, physical, and other characteristics of any waste to be shipped to WIPP for permanent disposal. Generator sites certify that each TRU waste payload container meets the requirements of *Transuranic Waste Acceptance Criteria for the Waste Isolation Pilot Plant* (DOE/WIPP 02-3122), prior to packaging the waste into Shipping Packages and shipping to WIPP. Generator sites must develop and implement site-specific TRU Waste program documents that address packaging and treatment of defense TRU Waste. Generator sites must submit these documents and any changes to existing documents, to the National TRU Program (NTP) for review and approval prior to their implementation.

There is no limited set of practical and economical SSCs available to confirm compliance of each Waste Container with the WIPP WAC. The WIPP WAC is an administrative program imposed on the waste generators. The Technical Review Program is tasked with determining that a generator site has the necessary and sufficient processes and procedures in place to assemble Acceptable Knowledge information into a record that allows WIPP to conduct a systematic assessment, analysis, and evaluation of compliance with the WIPP WAC and that the site is maintaining and executing those procedures and processes. The CCP or another Carlsbad Field Office (CBFO) approved program is tasked with characterizing TRU Waste on behalf of the waste generator sites to obtain information to satisfy the WIPP WAC before Waste Containers have been certified for disposal at the WIPP. Characterization at the generator sites includes compilation of Acceptable Knowledge into an auditable record, radiography and/or visual examination, flammable gas analysis, and non-destructive assay and/or radiochemistry. This work is conducted in accordance with the CBFO, *Quality Assurance Program Description* (QAPD), and the *CBFO Quality Assurance Project Plan* (QAPP, CCP-PO-001)

Boundaries and Interfaces

The WIPP WAC does not rely on any SSCs at WIPP to perform the Safety Function. Compliance with the WIPP WAC is further addressed in DSA Chapter 18.0, “WIPP Waste Acceptance Criteria Compliance Program.”

4.5.8.3 Functional Requirements

Table 4.5.8-1 restates the Safety Function and identifies the corresponding minimum functional requirements necessary to perform the stated Safety Function

Table 4.5.8-1. Functional Requirements for WIPP Waste Acceptance Criteria

Safety Function	Functional Requirements
To protect the assumptions of the safety analysis as to the nature, quantity, and confinement of TRU Waste shipped to WIPP.	WIPP WAC requirements include controls on treatment and packaging of waste to prevent internal fires, deflagrations/explosions/over-pressurization, and chemical exothermic reactions that can breach the confinement of the Waste Container.
	Exclude waste streams that contain oxidizers, have the characteristic of reactivity, and contain chemically incompatible materials, and excludes waste streams packaged in POCs and CCOs that contain combustibles.

4.5.8.4 Specific Administrative Control Evaluation

This subsection provides the performance criteria for the WIPP WAC that defines the control attributes necessary to meet the functional requirements listed in Table 4.5.8-1 and evaluates the capability to meet these performance criteria. The performance criteria and evaluations for the WIPP WAC are provided in Table 4.5.8-2.

Table 4.5.8-2. Performance Criteria and Performance Evaluation for the WIPP Waste Acceptance Criteria

Functional Requirements	Performance Criteria	Performance Evaluation
WIPP WAC requirements include controls on treatment and packaging of waste to prevent internal fires, deflagrations/explosions/over-pressurization, and chemical exothermic reactions that can breach the confinement of the Waste Container.	All objectives, performance and acceptance criteria for treatment and packaging of waste specified in the Technical Review Program Technical Review Plan shall be met.	Compliance with the WAC through review and approval of shipping documents prior to waste being received at WIPP. • Review of generator site waste generating and treatment program in accordance with the requirements of the CBFO Technical Review Plan. Compliance with the WAC is assured through implementation of the WIPP WAC Compliance SMP addressed in Chapter 18.0, "WIPP Waste Acceptance Criteria Compliance Program." Prior to shipment, TRU Waste Containers certified for shipment are documented in the WIPP Waste Data System (WDS). Upon receipt of TRU Waste shipments at WIPP, the associated shipping manifest is reviewed to confirm receipt of the stated material. Upon opening of a TRU Waste Shipping Package in the WHB, the TRU Waste Containers are inspected, to the degree that the container surfaces are visible, for signs of degradation (e.g., rusting, dents, punctures, and bulging). Containers suspected of not meeting the WIPP WAC as a result of these receipt inspections are identified and not handled until specific actions are identified and approved for resolution. Waste generators may also notify WIPP of suspect containers which will be located, and not handled until specific actions are identified and approved for resolution.
	All objectives, performance and acceptance criteria for characterization and certification specified in the CCP TRU Waste Characterization QA Project Plan shall be met.	Compliance with the WAC through review and approval of shipping documents prior to waste being received at WIPP. • Certification of the generator Waste Characterization and Certification Program in accordance with the CBFO QA Program.
Exclude waste streams that contain oxidizers, have the characteristic of reactivity, and contain chemically incompatible materials, and excludes waste streams packaged in POCs and CCOs that contain combustibles.	WAC excludes the shipment of waste streams having the RCRA characteristic of ignitability, which includes prohibiting untreated oxidizers, and waste streams containing untreated materials having the RCRA characteristic of reactivity, and requires generator sites to document treatment for these characteristics and chemical compatibility on a waste stream basis. WAC excludes waste streams packaged in POCs and CCOs that contain combustibles.	Compliance with the WAC ensures Waste Containers are evaluated, identified, and prohibited from being shipped to WIPP if there is insufficient technical basis to demonstrate the absence of the RCRA characteristic of ignitability (which includes untreated oxidizers, and material having the RCRA characteristic of reactivity), and chemical incompatibilities. Containers are evaluated, identified, and prohibited from being shipped to WIPP if they contain combustibles in a POCs and CCOs.

Compliance with the WIPP WAC involves many aspects beyond the scope of WIPP personnel receiving the shipments. Chapter 18.0, "WIPP Waste Acceptance Criteria Compliance Program," has been added to this DSA to address the scope of this SMP. WIPP personnel are responsible for reviewing each shipment manifest to confirm documentation regarding receipt of the shipment from the waste generator as well as verification of certification for waste stored in the WHB prior to the February 2014 events. This portion of the verification requires no special skills, or equipment, is not time dependent, and no adverse environmental conditions. Therefore, the shipment documentation review is not a complex task and can be assured with a SAC. However, waste generators may discover conditions after the receipt by WIPP that require resolution.

The vulnerabilities in the WIPP WAC are the following:

- The WIPP receives waste, certified to be compliant with WIPP WAC, and emplaces the waste in the UG. There is no means to practically and/or economically verify waste upon receipt at the WIPP.
- The WIPP WAC addresses the Acceptable Knowledge regarding waste constituencies and potential interactions. Unknown and/or unrecognized constituencies and potential interactions are possible.

4.5.8.5 Technical Safety Requirements (TSRs)

The following specific attributes of the WIPP WAC are required to be protected in the TSRs:

- All objectives, performance and acceptance criteria for waste forms, treatment and packaging of waste specified in accordance with the Technical Review Program Technical Review Plan shall be met.
- All objectives, performance and acceptance criteria for characterization and certification specified in accordance with the CCP TRU Waste Characterization QA Project Plan shall be met.
- WAC excludes the shipment of waste streams having the RCRA characteristic of ignitability, which includes prohibiting untreated oxidizers, and waste streams containing untreated materials having the RCRA characteristic of reactivity, and requires generator sites to document treatment for these characteristics and chemical compatibility on a waste stream basis.
- WAC excludes the shipment of waste streams packaged in POCs and CCOs that contain combustibles.

4.5.9 Transuranic Waste Outside the Waste Handling Building

The TRU Waste Outside the WHB control is established to ensure that TRU Waste Containers are protected from adverse events (e.g., fires, explosions, impacts) when located aboveground and outside the WHB. This control excludes site-derived TRU Waste. This is accomplished by ensuring that TRU Waste (excluding site-derived TRU Waste), aboveground and outside of the WHB, is contained in a Type B Shipping Package. Type B Shipping Packages are credited as an IC in the hazard analysis when TRU Waste is in a closed Type B Shipping Package. The WIPP WAC (see Section 4.5.8) requires the TRU Waste received at WIPP to be in a Type B Shipping Package. The TRU Waste Outside the WHB control is selected as a SS control.

4.5.9.1 Safety Function

The Safety Function of the TRU Waste Outside the WHB control is to prevent the release of radiological material due to fires, explosions, collisions and/or NPH events when TRU Waste (excluding site-derived TRU Waste) is located outside of the WHB by reducing the likelihood for TRU Waste Containers to not be protected by a Type B Shipping Package when outside of the WHB.

4.5.9.2 Specific Administrative Control Description

The TRU Waste Outside the WHB control ensures that TRU Waste Containers are protected from adverse events (e.g., fires, explosions, impacts) when located outside the WHB. RH and CH Waste is received from TRU Waste generators in Type B Shipping Packages (Section 4.4.11), which are not opened until positioned in the CH or RH Bay, as applicable. In the event that TRU Waste needs to be placed outside of the WHB, the TRU Waste Container is placed into a Type B Shipping Package, and closed (i.e., bolts have to be tightened and torqued but no leak test required) prior to exiting the WHB. This control ensures that TRU Waste above ground and outside of the WHB is secured inside a Type B Shipping Package.

Operations at WIPP will result in the generation of radiological waste (e.g., heating, ventilation, and air conditioning (HVAC) filters). This site-derived TRU Waste is deposited in and kept in metal containers (e.g., SWBs) until disposed of in the UG. This site-derived TRU Waste will be low in quantity and low in radiological content and therefore, it is not required to be contained within a Type B Shipping Package even though it is aboveground and outside the WHB.

The TRU Waste Outside the WHB control includes the element listed in Table 4.5.9-1 which provides a justification for the control and the expected administrative action.

Table 4.5.9-1. Justification of Specific Administrative Control versus Structures, Systems, and Components for Transuranic Waste Outside the Waste Handling Building

Program Element	Justification	Administrative Action
Ensure TRU Waste Containers outside the WHB are secured inside a closed Type B Shipping Package.	There are no engineered means to interlock WHB access doors with TRU Waste Container position to prevent movement of TRU Waste Container outside the confines of the WHB.	Administratively require Type B Shipping Packages can only be opened once inside the WHB. Administratively prohibit the movement of TRU Waste Containers out of the WHB unless secured in a closed Type B Shipping Packages.

Boundaries and Interfaces

The TRU Waste Outside the WHB control relies on the closed Type B Shipping Packages to perform the Safety Function.

4.5.9.3 Functional Requirements

Table 4.5.9-1 restates the Safety Function and identifies the corresponding minimum functional requirements necessary to perform the stated Safety Function.

Table 4.5.9-2. Functional Requirements for Transuranic Waste Outside the Waste Handling Building Control

Safety Function	Functional Requirements
To prevent the release of radiological material due to fires, explosions, collisions and/or NPH events when TRU Waste (excluding site-derived TRU Waste) is located outside of the WHB by reducing the likelihood for TRU Waste Containers to not be protected by a Type B Shipping Package when outside of the WHB.	TRU Waste Containers, excluding site-derived TRU Waste, must be in a closed Type B Shipping Package when above ground and outside the WHB.

4.5.9.4 Specific Administrative Control Evaluation

This subsection provides the performance criteria for the TRU Waste Outside the WHB control that define the control attributes necessary to meet the functional requirements listed in Table 4.5.9-2 and evaluates the capability to meet these performance criteria. The performance criteria and evaluations are provided in Table 4.5.9-3.

Table 4.5.9-3. Performance Criteria and Performance Evaluation for Transuranic Waste Outside Waste Handling Building Control

Functional Requirements	Performance Criteria	Performance Evaluation
TRU Waste Containers, excluding site-derived TRU Waste, must be in a closed Type B Shipping Package when above ground and outside the WHB.	TRU Waste, excluding site-derived TRU Waste, aboveground and outside the WHB shall be in a closed Type B Shipping Package.	Incoming Type B Shipping Packages are certified prior to shipment to WIPP. Procedures require movement of Packages into the WHB prior to its opening. Specialized equipment is necessary to open a Package and this equipment is located inside the WHB and is not available for usage external to the WHB. Ensuring that TRU Waste is inside a Type B Shipping Package when it is above ground and outside of the WHB ensures that the contained TRU Waste would not be subject to release due to fires, deflagrations, collisions, external, or NPH events occurring in the outside area. The assembly of a Type B Shipping Package for placement outside the WHB involves placement of the TRU Waste inside a Type B Shipping Package and closure of the Package. Procedures prescribe the closure process, Waste Handling Operators are trained on the procedure, no special skills are required, there are no time constraints, and no adverse work environment conditions exist. Annual inspections verify the Type B Shipping Packages are closed. Site-derived TRU Waste is kept in closed metal containers, is low in quantity and radiological content, and the consequences of any release would be Low to all receptors. Therefore, site-derived TRU Waste is excluded from being required to be in a closed Type B Shipping Package when it is aboveground and outside of the WHB. Therefore, TRU Waste being in a closed Type B Shipping Package when aboveground and outside the WHB is a low complexity task and can be assured with a SAC.

On this basis, it has been determined that the TRU Waste Outside WHB control is capable of performing the Safety Function.

4.5.9.5 Technical Safety Requirements (TSRs)

The following specific attribute of the TRU Waste Outside the WHB control is required to be protected in the TSRs:

- TRU Waste, excluding site-derived TRU Waste, aboveground and outside the WHB shall be in a closed Type B Shipping Package.

4.5.10 Fuel Tanker Prohibition

The Fuel Tanker Prohibition control is established to ensure that Fuel Tankers are precluded from the WHB Parking Area Unit where TRU Waste may be present. The control of Fuel Tanker Prohibition is selected as a SS control.

4.5.10.1 Safety Function

The Safety Function of the Fuel Tanker Prohibition control is to prevent tanker truck pool fires from involving TRU Waste Containers by ensuring that Fuel Tankers are precluded from the WHB Parking Area Unit, thereby reducing the likelihood for a pool fire involving a Fuel Tanker.

4.5.10.2 Specific Administrative Control Description

The operation of Fuel Tanker trucks at WIPP is required for maintaining a fuel supply for WIPP liquid-fueled vehicles/equipment. These operations present the opportunity for radiological material release due to vehicle/equipment fires resulting from the presence of liquid-combustibles and ignition sources and/or impacts to the containers. The use of Fuel Tanker trucks is required by the activities at WIPP and no limited set of practical and reliable SSCs is available to prevent the occurrence of these events. Therefore, ACs are required to reduce the likelihood of occurrence and the Fuel Tanker prohibition control is designated as a SAC since engineered controls are not available to prevent occurrence of events requiring SS protection.

The Fuel Tanker Prohibition control includes the elements listed in Table 4.5.10-1, which provides a justification for why an SSC was not selected and identifies the administrative action to accomplish the element.

Table 4.5.10-1. Justification of Specific Administrative Control versus Structures, Systems, and Components for Fuel Tanker Prohibition Control

Program Element	Justification	Administrative Action
Requires Fuel Tanker to be precluded from the WHB Parking Area Unit.	No current means to detect Fuel Tanker location other than visual. No current means to detect Fuel Tankers entering the WHB Parking Area Unit other than visual.	Administrative prevention of Fuel Tankers from entering WHB Parking Area Unit.

Boundaries and Interfaces

The Fuel Tanker Prohibition control does not rely on any SSCs to perform its Safety Function.

4.5.10.3 Functional Requirements

Table 4.5.10-2 restates the Safety Function and identifies its corresponding minimum functional requirements necessary to perform the stated Safety Function.

Table 4.5.10-2. Functional Requirements for the Fuel Tanker Prohibition Control

Safety Function	Functional Requirements
To prevent tanker truck pool fires from involving TRU Waste Containers by ensuring that Fuel Tankers are precluded from the WHB Parking Area Unit, thereby reducing the likelihood for a pool fire involving a Fuel Tanker.	Fuel tanker prohibited from entering WHB Parking Area Unit.

4.5.10.4 Specific Administrative Control Evaluation

This subsection provides the performance criteria for the Fuel Tanker Prohibition control that defines the control attributes necessary to meet the functional requirements listed in Table 4.5.10-2 and evaluates the capability to meet these performance criteria. The performance criteria and evaluations for the Fuel Tanker Prohibition control are provided in Table 4.5.10-3.

Table 4.5.10-3. Performance Criteria and Performance Evaluation for the Fuel Tanker Prohibition Control

Functional Requirements	Performance Criteria	Performance Evaluation
Fuel tanker prohibited from entering WHB Parking Area Unit.	Fuel tankers shall not be present in the WHB Parking Area Unit.	The direct route between the access control point and the aboveground refueling station is north of the WHB which avoids any interaction with TRU Waste in the WHB Parking Area Unit. The implementation of this AC is not complex. Fuel tanker trucks are met at the access control point prior to entry within the protected area. Personnel are trained on the requirement, no special equipment is needed, and there are no time constraints involved. Therefore, this AC can be reliably accomplished.

On this basis, it has been determined that the Fuel Tanker Prohibition control is capable of performing the Safety Function.

4.5.10.5 Technical Safety Requirements (TSRs)

The following specific attribute of the Fuel Tanker Prohibition control is required to be protected in the TSRs:

- Fuel tankers are prohibited from entering the WHB Parking Area Unit.

4.5.11 Contact-Handled Bay Alternative Barrier Provision

The CH Bay Alternative Barrier Provision control is established to ensure that the southwest section of the WHB wall is protected when a portion of the Vehicle Barriers (Section 4.4.14) is required to be

removed to permit liquid-fueled vehicle/equipment access to the excluded area. The control of CH Bay Alternative Barrier Provision is selected as a SS control.

4.5.11.1 Safety Function

The Safety Function of the CH Bay Alternative Barrier Provision control is to reduce the likelihood for release of radiological material from CH Waste in the WHB due to impacts by vehicles and/or fires adjacent to the southwest wall of the CH Bay by maintaining control of liquid-fueled vehicles/equipment in and around the exclusion zone when the concrete Vehicle Barriers are not fully installed.

4.5.11.2 Specific Administrative Control Description

Vehicle Barriers (Section 4.4.14) are normally installed to establish a vehicle/equipment area along the southwest wall of the CH Bay to protect the CH Bay from impacts by vehicles and/or fires adjacent to the CH Bay. Establishment of this area prevents vehicles from crashing through the CH Bay wall and into the CH Bay where CH Waste may be stored, as well as precluding fueled vehicles/equipment from being in this area. Prohibiting liquid-fueled vehicles/equipment from being in this area reduces the likelihood for fires, especially liquid-combustible fires, to occur which could compromise the CH Bay external surface and expose CH Waste to significant heat flux. Vehicle operations in the WHB Parking Unit present the opportunity for radiological material release due to vehicle/equipment fires resulting from the presence of liquid-combustibles and ignition sources and/or impacts to the containers. The use of vehicles and equipment is required by the activities at WIPP. Experience has demonstrated that on occasion, liquid-fueled vehicles and/or equipment may be required to enter the exclusion zone to allow maintenance (e.g., WHB fire main). Therefore, an AC is required to permit access to the area while ensuring that the reduced likelihood of vehicle/equipment collisions and/or pool fires that could affect the CH Waste in the CH Bay is maintained. Therefore, the CH Bay Alternative Barrier Provision control is designated as a SAC. WIPP Drawing 24-Z-044-W1 shows the normal placement of the Vehicle Barriers when none are removed as allowed by this SAC.

The CH Bay Alternative Barrier Provision control includes the elements listed in Table 4.5.11-1, which provides a justification for why an SSC was not selected and identifies the administrative action to accomplish the element.

Table 4.5.11-1. Justification of Specific Administrative Control versus Structures, Systems, and Components for Contact-Handled Bay Alternative Barrier Provision Control

Program Element	Justification	Administrative Action
Liquid-fueled vehicles/equipment requires access to the exclusion zone along the southwest wall of the CH Bay.	A portion of the Vehicle Barrier (Section 4.4.14) is required to be removed to allow liquid-fueled vehicles/equipment to perform maintenance. Therefore, the SSC to protect the CH Bay is not fully installed and there is no other SSC available to protect the CH Bay.	Administrative prevention of vehicle/ equipment activities that could compromise the CH Bay southwest wall.

Boundaries and Interfaces

The CH Bay Alternative Barrier Provision control relies on the installed portions of the Vehicle Barriers (Section 4.4.15) to perform the Safety Function.

4.5.11.3 Functional Requirements

Table 4.5.11-2 restates the Safety Function and identifies its corresponding minimum functional requirements necessary to perform the stated Safety Function.

Table 4.5.11-2. Functional Requirements for the Contact-Handled Bay Alternative Barrier Provision Control

Safety Function	Functional Requirements
To reduce the likelihood for release of radiological material from CH Waste in the WHB due to impacts by vehicles and/or fires adjacent to the southwest wall of the CH Bay by maintaining control of liquid-fueled vehicles/ equipment in and around the exclusion zone when the concrete Vehicle Barriers are not fully installed.	Liquid-fueled vehicles/equipment shall be Attended when inside the exclusion zone footprint defined by the nominal position of the Vehicle Barriers as described in Section 4.4.14.
	Liquid-fueled vehicles/equipment in the WHB Parking Area Unit shall be Attended when being moved and the Vehicle Barriers (Section 4.4.14) are not fully installed.

4.5.11.4 Specific Administrative Control Evaluation

This subsection provides the performance criteria for the CH Bay Alternative Barrier Provision control that defines the control attributes necessary to meet the functional requirements listed in Table 4.5.11-2 and evaluates the capability to meet these performance criteria. The performance criteria and evaluations for the CH Bay Alternative Barrier Provision control are provided in Table 4.5.11-3.

Table 4.5.11-3. Performance Criteria and Performance Evaluation for the Contact-Handled Bay Alternative Barrier Provision Control

Functional Requirements	Performance Criteria	Performance Evaluation
Liquid-fueled vehicles/equipment shall be Attended when inside the exclusion zone footprint defined by the nominal position of the Vehicle Barriers as described in Section 4.4.14.	Liquid-fueled vehicles/equipment shall be Attended if inside the exclusion zone defined by the barriers.	It may be necessary to move a single or multiple Vehicle (Jersey) Barrier(s) to allow access to the exclusion zone for maintenance or other activities. Liquid-fueled vehicles or equipment may enter the exclusion zone defined by the nominal placement of the Vehicle Barriers and the CH Bay wall. Any vehicles entering or moving in the exclusion zone will be traveling at a low speed and shall be Attended. The combination of low speed and a vehicle Attendant during vehicle movement is sufficient to minimize impacts or collisions with the CH Bay south-southwest wall.
Liquid-fueled vehicles/equipment in the WHB Parking Area Unit shall be Attended when being moved and the Vehicle Barriers (Section 4.4.14) are not fully installed.	When the Vehicle Barriers (Section 4.4.14) are not fully installed, liquid-fueled vehicles/ equipment shall be Attended when being moved in the WHB Parking Area Unit.	Vehicles parked outside of the normal exclusion zone provided by the Vehicle Barriers do not require a separate Attendant as they do not have the potential to cause a fire that could damage the WHB. Vehicles outside of the normal exclusion zone will be subject to other controls (e.g., speed limit, limited space to build up speed and maneuver) that will minimize the potential for the vehicle to enter the exclusion zone and impact the CH Bay wall. An Attendant on vehicles that are operating in the WHB Parking Area Unit outside the exclusion zone will have very limited, if any, potential to prevent a runaway vehicle from entering the exclusion zone. However, vehicles being moved in the WHB Parking Area Unit outside the exclusion zone are subject to other controls (e.g., speed, limited space to build up speed, and maneuver) reduce the potential for inadvertent entry and allows an Attendant the opportunity to redirect the vehicle away from the exclusion zone.

On this basis, it has been determined that the CH Bay Alternative Barrier Provision control is capable of performing the Safety Function.

4.5.11.5 Technical Safety Requirements (TSRs)

The following specific attribute of the CH Bay Alternative Barrier Provision control is required to be protected in the TSRs:

- Vehicle Barriers are installed per Section 4.4.14 except as needed to allow liquid-fueled vehicle/equipment access to the exclusion zone.
- Liquid-fueled vehicles/equipment are Attended when inside the exclusion zone footprint.
- Liquid-fueled vehicles/equipment are Attended when being moved within the Parking Area Unit and the Vehicle Barriers are not fully installed per Section 4.4.14.

4.5.12 Real-time Monitoring at Panel 6 and Panel 7 Isolation Bulkheads

The Real-time Monitoring at Panel 6 and Panel 7, Room 7 Isolation Bulkheads control is established to ensure that real-time airborne radiological monitoring is implemented and maintained in the areas outside the Panel 6 and Panel 7, Room 7 Isolation Bulkheads. The Real-time Monitoring will ensure prompt detection of a radiological release originating inside the closed areas and provide local indication and/or alarms or alarms in the CMR to minimize UG facility worker radiological exposure to an airborne release. The Real-time Monitoring at the Panel 6 and Panel 7, Room 7 Isolation Bulkheads is selected as an SS control.

Real-time Monitoring for airborne radiological material is defined as any airborne monitoring that will give a prompt alert or warning of airborne radiological material above preset limits without the need for a laboratory analysis.

4.5.12.1 Safety Function

The Safety Function of the Real-time Monitoring at the Panel 6 and Panel 7, Room 7 Isolation Bulkheads control is to mitigate the potential consequences of a radiological release from an exothermic chemical reaction of non-compliant containers in Panel 6 and/or Panel 7, Room 7 by detecting and promptly alerting facility workers in the applicable areas of elevated airborne radiological activity levels outside of the Isolation Bulkheads.

4.5.12.2 Administrative Control Description

Panel 6 and Panel 7, Room 7 contain noncompliant waste containers from the same waste stream (LA-MIN02-V.001) that resulted in the exothermic chemical reaction that occurred in Panel 7, Room 7 in February 2014. As Panel 6 and Panel 7, Room 7 have been closed and isolation bulkheads have been installed, the only potential mechanism to detect such an event in the UG would be by real-time monitoring of radioactive particles in the air in the vicinity of the Isolation Bulkheads (Section 4.4.13). The Real-time Monitoring function will promptly alert UG workers in the areas of elevated airborne radiological contamination and permit the workers to leave the applicable area.

Radiological monitoring is required to ensure that the appropriate actions are taken to protect the UG facility workers. To protect workers that could be affected by radioactive material releases from an exothermic reaction in Panel 6 or Panel 7, Room 7, a SAC is established that requires Real-time Monitoring to detect elevated airborne radiological material in the applicable areas from an exothermic

event in the closed panels or room that may allow airborne radiological material to escape from the closed panel or room. The applicable areas included in this SAC are:

- Drift S-2180 and all areas south of Drift S-2180.
- E-300 between S-2180 and the Exhaust Shaft.
- Areas determined to be within the exhaust path of Panel 6 and/or Panel 7, Room 7 following changes in ventilation configuration.

The current exhaust drifts downstream of Panel 6 are W-170 south to S-3310 (east going through the overcast at E-140) exhausting to E-300, and W-170 south to S-3650 exhausting to E-300. The exhaust drift downstream of Panel 7, Room 7 is S-2180 east going through the overcasts at W-30 and E-140 exhausting to E-300. This specific routing is subject to change as conditions in the underground vary and the Radiation Protection Program is responsible for ensuring appropriate monitoring is available in the drifts to protect underground workers from releases occurring within Panel 6 or Panel 7, Room 7. Such a condition could exist when active airflow is lost or reconfigured for operations in the UG and access is needed. The applicable area defined in the SAC related to exhaust drifts downstream of Panel 6 and Panel 7, Room 7 should then be expanded to other areas of the UG (e.g., S-2520 and S-2750 between W-170 and E-30) that normally supply air. The Radiation Protection Program is expected to evaluate and expand monitoring to other areas potentially affected to implement the SAC.

The SAC is applicable whenever facility workers are in the applicable areas.

Monitoring in the Applicable Areas

The control of real-time Monitoring in the UG includes the elements listed in Table 4.5.12-1 which provide a justification for why an SSC was not selected and identifies the administrative action to accomplish the element.

Table 4.5.12-1. Justification for Specific Administrative Control versus Structures, Systems, and Components for Real-time Monitoring at the Panel 6 and Panel 7 Isolation Bulkheads

Element	Justification	Administrative Action
Requires airborne radiological monitoring in the exhaust paths outside the Panel 6 and Panel 7, Room 7 Isolation Bulkheads to permit promptly alerting workers so they can leave the areas.	There are no engineered means to completely prevent leakage from Panel 6 or Panel 7, Room 7 if an exothermic event occurs in the closed panel or room. The installed Isolation Bulkheads provide an impediment to leakage; however, these bulkheads are not, and cannot be constructed to be leak tight due to the nature of the UG (i.e., salt formations). Mitigation of facility worker consequences from such an event requires real-time airborne monitoring for radiological materials to permit facility workers to leave the area. Real-Time Monitoring provides a means to detect leakage external to	Administratively require airborne radiological monitoring in these areas when workers are present in these areas and the exhaust path. Administratively require monitoring and prompt alert of UG workers upon detection of elevated airborne activity levels and initiate protective actions, as necessary, to minimize exposure to airborne radiological material.

Element	Justification	Administrative Action
	the bulkheads from an exothermic event. While continuous air monitors (CAMs) are available in some areas of the UG, the equipment is not currently capable of monitoring all areas affected by the accident and promptly alerting workers in these areas. Although there are CAMs near Panel 6 and Panel 7 that annunciate locally and communicate with the CMR, their adequacy to achieve SS functions has not been fully verified as sufficiently reliable. Until such time as these upgrades are completed, a SAC is established to ensure that Real-Time Monitoring is provided with a capability to promptly alert all affected workers using available and approved monitoring techniques (including CAMs) in accordance with the DOE approved WIPP RPP.	

Boundaries and Interfaces

The Radiological Monitoring in these areas relies on radiological monitoring equipment as selected by the Radiological Protection organization to perform the Safety Function. This may include equipment such as installed or portable CAMs, local monitoring instrumentation, or personal monitors worn by one or more workers.

4.5.12.3 Functional Requirements

Table 4.5.12-2 restates the Safety Function and identifies the corresponding minimum functional requirements necessary to perform the stated Safety Function.

Table 4.5.12-2. Functional Requirements for the Real-time Monitoring at Panel 6 and Panel 7 Isolation Bulkheads Control

Safety Function	Functional Requirements
To mitigate the potential consequences of a radiological release from an exothermic chemical reaction of non-compliant containers in Panel 6 and/or Panel 7, Room 7 by detecting and promptly alerting facility workers in the applicable areas of elevated airborne radiological activity levels outside of the Isolation Bulkheads.	Real-time airborne radiological monitoring of the applicable areas outside the Panel 6 and Panel 7, Room 7 Isolation Bulkheads shall be conducted with methods that provide real-time detection and promptly alert workers to high airborne radioactive concentrations (i.e., in excess of acceptable exposure limits established in the WIPP 10 CFR 835 RPP).

4.5.12.4 Administrative Control Evaluation

This subsection provides the performance criteria for the Real-time Monitoring at the Panel 6 and Panel 7, Room 7 Isolation Bulkheads that defines the control attributes necessary to meet the functional requirements listed in Table 4.5.12-2 and evaluates the capability of the to meet these performance criteria. The performance criteria and evaluations are provided in Table 4.5.12-3.

Table 4.5.12-3. Performance Criteria for the Real-time Monitoring at the Panel 6 and Panel 7 Isolation Bulkheads Control

Functional Requirements	Performance Criteria	Performance Evaluation
Real-time airborne radiological monitoring of the applicable areas outside of Panel 6 and Panel 7, Room 7 Isolation Bulkheads shall be conducted with methods that provide real-time detection and promptly alert workers to high airborne radioactive concentrations (i.e., in excess of acceptable exposure limits established in the WIPP 10 CFR 835 compliant RPP).	Real-Time Monitoring of airborne radiological material in accordance with the RPP satisfying the 10 CFR 835 exposure limits shall be provided whenever one or more of the following applicable areas are occupied. • Drifts S-2180 and all areas south of Drift S-2180. • E-300 between S-2180 and the Exhaust Shaft. • Areas determined to be within the exhaust path of Panel 6 and/or Panel 7, Room 7 following changes in ventilation configuration.	The areas specified in the performance criteria ensure applicability to workers affected by exothermic chemical reactions involving non-compliant containers in Panel 6 or Panel 7, Room 7. A concentrated plume from such an accident would be behind isolation bulkheads, but some leakage is possible where flashing is connected to the salt surface. Diffusion past the bulkhead is expected to follow the normal exhaust flow paths external to the bulkheads in Panel 6 and Panel 7, Room 7. However, the intake side immediately adjacent to isolation bulkheads could also be vulnerable. Therefore, the SAC includes these areas, as well as the exhaust paths in the performance criteria. The WIPP RPP ensures that airborne exposure monitoring is accomplished in these areas through approved reliable methods such as CAMs, personal monitors worn by workers or other instrumentation employed by trained Radiological Control Technicians. While the SAC requires monitoring of all vulnerable areas when occupied, the RPP will also ensure continuous monitoring of areas outside the isolation bulkheads. Following an exothermic chemical reaction in Panel 6 or Panel 7, Room 7 Airborne activity would be at its highest concentration in these areas. The WIPP RPP requires a prompt response to increasing radiation levels that are detected to avoid any unplanned exposures above administrative dose limits. These actions include notification of affected workers, stopping work, and exiting the area. Requirements in the SAC to perform real-time monitoring in accordance with the program ensures that affected facility workers are notified in a timely manner of potential exposures at levels well below airborne concentrations associated with high facility worker consequences (i.e., serious injury or death) as defined in this DSA.

Functional Requirements	Performance Criteria	Performance Evaluation
		Based on the performance evaluation, it is determined that the SAC ensures sufficient actions to protect workers from the events identified in the hazard analysis. However, the preferred method for accomplishing the safety functions is with engineered methods in accordance with the DOE-STD-3009-2014 hierarchy of control. As such, Chapter 3.0, Section 3.6, of this DSA describes planned operational upgrades in the facility that will rely on CAMs. As noted in Table 4.5.12-1, a project is being developed that will upgrade CAMs in locations near the intake and exhaust Panel 6 and Panel 7 isolation bulkheads. The CAMs and associated infrastructure for communicating with the CMR will then be SS components. The SAC does not require actions or tasks that are more complex than what are required by the existing RPP. WIPP workers are trained on the requirements and techniques associated with the use of airborne exposure monitoring equipment, as well as worker response to alarm notifications. The SAC requirements are within their normal duties. Therefore, this control can be reliably accomplished.
	Notification of an elevated airborne radiological concentration will be provided per the WIPP notification requirements to alert workers to elevated airborne activity levels.	Temporary or portable CAMs provide a local alarm (both audible and visual). Networked CAMs provide an alarm in the CMR. When an alarm condition is detected, notification to the CMR and other workers is made as described in the “Communications” portion of Chapter 11.0, Section 11.3, of this DSA. Temporary or moveable CAMs provide a local audible and visual alarm. Both the hand held instrumentation used by the RCTs and the personal monitors worn by selected workers provide a local audible alarm. For any portable CAMs, or hand held or personal monitors, the RCT or another UG worker will notify workers in the immediate vicinity to leave the area and notify the CMR to alert workers in the area who are not in the immediate area to leave the area.

On this basis, it has been determined that the Real-time Monitoring at the Panel 6 and Panel 7, Room 7 Isolation Bulkheads control is capable of performing its Safety Function.

4.5.12.5 Technical Safety Requirements (TSRs)

The following specific attribute of the Real-time Monitoring at the Panel 6 and Panel 7 Isolation Bulkheads control is required to be protected in the TSRs:

- Real-Time Monitoring for elevated airborne radioactive material levels in accordance with the WIPP Radiation Protection Program (RPP) and provisions to alert workers shall be provided in the following areas when these applicable areas are occupied.

- Drift S-2180 and all areas south of Drift S-2180.
- E-300 between S-2180 and the Exhaust Shaft.
- Areas determined to be within the exhaust path of Panel 6 and/or Panel 7, Room 7 following changes in ventilation configuration.

4.5.13 Attendance of Vehicles/Equipment in the RH Bay

The Attendance of Vehicles/Equipment with Liquid-combustible Capacity in the RH Bay is established to ensure observance of vehicle/equipment operations to preclude involvement of WHB structural supports in pool fires. The Attendant is responsible for observing vehicles/equipment with liquid-combustible capacity for fuel/hydraulic leaks and other conditions which could lead to a pool fire that affects CH Waste due to the weakening of WHB structural steel columns. This control is only needed when CH Waste is present in the WHB outside of Type B Shipping Packages. The Attendance of Vehicles/ Equipment with Liquid-combustible Capacity in the RH Bay is selected as a SS control.

4.5.13.1 Safety Function

The Safety Function of the control for Attendance of Vehicles/Equipment with Liquid-combustible Capacity in the RH Bay is to prevent pool fires that could potentially degrade of WHB structural steel columns resulting in a building collapse and release of radiological material from CH Waste containers in the WHB by assuring personnel are observant of the activities and can readily respond to upset conditions to reduce the likelihood for pool fires.

4.5.13.2 Specific Administrative Control Description

The operation of vehicles/equipment with liquid-combustible capacity at WIPP is required. These operations present the opportunity for radiological material release due to vehicle/equipment pool fires resulting from the presence of liquid-fuel and ignition sources. These fuel pools can originate in RH Bay and affect WHB structural steel columns. The weakening of a WHB structural steel column could result in a collapse of some portion of the WHB roof which could impact CH Waste present in the CH Bay. WIPP-058 determined that approximately 56 gallons of diesel would be required to achieve a fire of greater than 10 minutes that would be necessary to structurally weaken the steel column. Therefore, quantities of less than 56 gallons of diesel would not be sufficient to result in column failure. This control requires vehicles/equipment with ≥ 25 gallons of combustible-liquid to be attended in the RH Bay. The use of aboveground vehicles/equipment with liquid-combustible capacity is required by the activities at WIPP and there is no current limited set of practical and reliable SSCs is available to prevent the occurrence of these events until such time as a suitable engineered feature is available (Chapter 3.0, Section 3.6, of this DSA). Therefore, ACs are required to prevent the occurrence of an event and the control for Attendance of Vehicles/Equipment with Liquid-combustible Capacity in the RH Bay is designated as a SAC since engineered controls are not available to prevent occurrence of events requiring SS protection.

The presence of vehicles/equipment in the RH Bay is required for performance of the WIPP mission. Vehicles/equipment must be brought into the RH Bay to deliver/retrieve RH-TRU 72-B Shipping Packages and to perform maintenance (e.g., man-lift). There are no current means to monitor and prevent adverse vehicle interaction other than by visual observation. Due to the large height of the RH Bay, the response of the heat-actuated sprinkler system is limited. Therefore, visual observation of conditions which could initiate fires is needed to ensure prompt response to a fire hazard.

Boundaries and Interfaces

The control for Attendance of Vehicles/Equipment with Liquid-combustible Capacity in the RH Bay does not rely on any SSCs to perform the Safety Function.

4.5.13.3 Functional Requirements

Table 4.5.13-1 restates the Safety Function and identifies the corresponding minimum functional requirement necessary to perform the stated Safety Function.

Table 4.5.13-1. Functional Requirement for Attendance of Vehicles/Equipment with Liquid-combustible Capacity in the RH Bay

Safety Function	Functional Requirements
To prevent pool fires that could potentially degrade of WHB structural steel columns resulting in a building collapse and release of radiological material from CH Waste containers in the WHB by assuring personnel are observant of the activities and can readily respond to upset conditions to reduce the likelihood for pool fires.	Vehicles/equipment with liquid-combustible capacity are Attended in the RH Bay when CH Waste is present in the CH Bay.

4.5.13.4 Specific Administrative Control Evaluation

This section provides the performance criteria for attendance of vehicles/equipment with liquid-combustible capacity in the RH Bay that defines the control attributes necessary to meet the functional requirements listed in Table 4.5.13-1 and evaluates the capability of the AC to meet these performance criteria. The performance criteria and evaluations for Attendance of Vehicles/Equipment with Liquid-combustible capacity in the RH Bay are provided in Table 4.5.13-2.

Table 4.5.13-2. Performance Criteria and Performance Evaluation for Attendance of Vehicles/Equipment with Liquid-combustible Capacity in the RH Bay

Functional Requirements	Performance Criteria	Performance Evaluation
Vehicles/equipment with liquid-combustible capacity are Attended in the RH Bay when CH Waste is present in the CH Bay.	Vehicles/equipment with ≥ 25 gallons of combustible-liquid shall be Attended in the RH Bay when CH Waste is present in the CH Bay outside of Type B Shipping Packages.	WIPP-058 states that approximately 56 gallons of combustible liquid would be required to achieve a fire of greater than 10 minutes, which is sufficient to structurally weaken the steel column. The ≥ 25 gallons of combustible-liquid is established as a conservative criteria that protects structural steel supports from fires that could weaken them. Attendance of vehicles/equipment with liquid-combustible capacity in the RH Bay allows for controlling/monitoring for vehicle/equipment interactions and to take action should conditions warrant. Attendance reduces the probability for formation and ignition of fuel pools by preventing collisions and being observant of conditions that could result in a pool fire (e.g., leaks, ignition sources, presence of smoke). The implementation of this AC is not complex. Waste Handling Operators are trained on the requirement, monitoring vehicles/equipment with liquid-combustible capacity in the RH Bay is not difficult, no special equipment is needed, and there are no time constraints involved. Therefore, this AC can be reliably accomplished.

On this basis, it has been determined that the Attendance of Vehicles/Equipment with Liquid-combustible Capacity in the RH Bay control is capable of performing its Safety Function.

4.5.13.5 Technical Safety Requirements (TSRs)

The following specific attribute is required to be protected in the TSRs:

- Vehicles/equipment in the RH Bay with liquid-combustible capacity ≥ 25 gallons shall be attended when CH Waste is in the WHB outside of Type B Shipping Packages.

4.6 REFERENCES

09-BF1000, Revision 1, *Backfit Analysis-308 Bulkhead DP*, Nuclear Waste Partnership LLC, Carlsbad, NM.

09-BF1001, Revision 1, *Backfit Analysis-309 Bulkhead Differential Pressure*, Nuclear Waste Partnership LLC, Carlsbad, NM.

09-BF1003, Revision 1, *Backfit Analysis-Central Monitoring System*, Nuclear Waste Partnership LLC, Carlsbad, NM.

09-BF1005, Revision 1, *Backfit Analysis-Underground Ventilation System-Interim Ventilation System*.

09-BF1006, Revision 1, *Backfit Analysis-UVS HEPA Filter DP Transmitters*, Nuclear Waste Partnership LLC, Carlsbad, NM.

09-BF1010, Revision 0, *Backfit Analysis - Trudock Cranes and Crane Rails*, Nuclear Waste Partnership LLC, Carlsbad, NM.

10 CFR 71, "Packaging and Transportation of Radioactive Material," *Code of Federal Regulations*, U.S. Government Printing Office, Washington, DC.

10 CFR 71.47(a), "External radiation standards for all packages," *Code of Federal Regulations*, U.S. Government Printing Office, Washington, DC.

10 CFR 73, "Physical Protection of Plants and Materials," *Code of Federal Regulations*, U.S. Government Printing Office, Washington, DC.

10 CFR 830, "Nuclear Safety Management," Subpart B, "Safety Basis Requirements," *Code of Federal Regulations*, U.S. Government Printing Office, Washington, DC.

30 CFR 57, "Mineral Resources: Safety and Health Standards – Underground Metal and Nonmetal Mines," *Code of Federal Regulations*, U.S. Government Printing Office, Washington, DC.

49 CFR 173, "Shippers General Requirements for Shipments and Packagings," *Code of Federal Regulations*, U.S. Government Printing Office, Washington, DC.

ANSI-M11.1, *Wire Rope for Mines.*

ANSI/UL 1254, *Pre-Engineered Dry Chemical Extinguishing System Units.*

ASME N510, *Testing of Nuclear Air-Treatment Systems.*

ASTM A29, *Standard Specification for Steel Bars, Carbon and Alloy, Hot-Wrought and Cold Finished.*

ASTM A36, *Standard Specification for Carbon Structural Steel.*

ASTM A108, *Standard Specification for Steel Bars, Carbon, Cold Finish, Standard Quality.*

ASTM A240, *Standard Specification for Chromium and Chromium-Nickel Stainless Steel Plate, Sheet, and Strip for Pressure Vessels and for General Applications.*

ASTM A516, *Standard Specification for Pressure Vessel Plates, Carbon, Steel, for Moderate and Lower Temperature Service.*

ASTM A576, *Standard Specification for Steel Bars, Carbon, Hot-Wrought, Special Quality.*

ASTM B633, *Standard Specification for Electro deposited Coatings of Zinc on Iron and Steel.*

CALC 15-009, *Natural Phenomena Hazard Assessment of Waste Handling Building*, Nuclear Waste Partnership LLC, Carlsbad, NM.

CALC 15-029, *Loop Accuracy for a New Differential Pressure Transmitter at Bulkhead 308 Rev. 1*, Revision 1, February 2016, Waste Isolation Pilot Plant Carlsbad Field Office, Carlsbad, NM.

CALC 16-007, *Room and HEPA Instrument Uncertainty*, Revision 2, April 2016, Nuclear Waste Partnership LLC, Carlsbad, NM.

CALC 16-008, *Uncertainty of Mechanical Gauges for Differential Pressure Measurement across HEPA Filter Banks*, Revision 1, April 2016, Nuclear Waste Partnership LLC, Carlsbad, NM.

CALC 16-010, *Loop Uncertainty Accuracy for a New Differential Pressure Indicator at Bulkhead 309*, Revision 1, April 2016, Waste Isolation Pilot Plant Carlsbad Field Office, Carlsbad, NM.

CBFO letter 15-1489, *Waste Isolation Pilot Plant Nitrate Salt Bearing Waste Container Isolation Plan*, Revision 2, May 29, 2015. Nuclear Waste Partnership LLC, Carlsbad, NM.

CS-41-B-003, *Calculate Required Shield Thicknesses in RH Waste Handling Area*, Revision 0, July 12, 1979.

CS-41-D-124, *Analysis & Design of Waste Handling Building Main Columns*, Revision 0, November 18, 1983.

CS-41-D-802, *Wind and Tornado Loads for TRU-PACT Extension*, Revision 0, April 30, 2008.

CS-41-D-851, *TRUPACT Maintenance Facility Horizontal Seismic Analysis*, Revision 0, April 13, 1984.

CS-41-D-852, *Seismic Analysis - Vertical TRUPACT Maintenance Facility*, Revision 0, April 18, 1984.

CS-45-D-481, *Seismic Analysis of Support Building*, Revision 0, November 30, 1983.

D-76-D01, *Design Basis*, Revision 8, December 1, 1982.

DA: 04:02007, Inter-office Correspondence, *Maximum Dose Rate Through a Broken Remote Handling Cell Window*, R. B. Hayes, January 20, 2003.

Drawing 41-D-011-W1, *Waste Handling Facilities Facility Pallet Assembly Equipment No. 52-Z-002*, April 1990, WIPP, Carlsbad, NM.

DNFSB 2004-2, *DOE Ventilation System Evaluation Guidance for Safety-Related and Non-Safety-Related Systems*, U.S. Department of Energy, Washington, D.C., January 2006.

DOE Guide 421.1-2, 2001, *Implementation Guide for Use in Developing Documented Safety Analyses to Meet Subpart B of 10 CFR 830*, October 24, 2001, U.S. Department of Energy, Washington, DC.

DOE-HDBK-1169-2003, DOE *Nuclear Air Cleaning Handbook*, December 2003, U.S. Department of Energy, Washington, DC.

DOE Order 420.1C, 2012, *Facility Safety*, December 4, 2012, U.S. Department of Energy, Washington, DC.

DOE-STD-1020-2012, *Natural Phenomena Hazards Analysis and Design Criteria for Department of Energy Facilities*, December 2012, U.S. Department of Energy, Washington, DC.

DOE-STD-1098-2008, *Radiological Control*, June 2009, U.S. Department of Energy, Washington, DC.

DOE-STD-1186-2004, *Specific Administrative Controls*, August 2004, U.S. Department of Energy, Washington, DC.

DOE-STD-3009-2014, *Preparation of Nonreactor Nuclear Facility Documented Safety Analysis*, November 2014, U.S. Department of Energy, Washington, DC.

DOE-STD-5506-2007, *Preparation of Safety Basis Documents for Transuranic (TRU) Waste Facilities*, April 2007, U.S. Department of Energy, Washington, DC.

DOE/WIPP 02-3122, WIPP WAC, *Transuranic Waste Acceptance Criteria for the Waste Isolation Pilot Plant* (current revision), U.S. Department of Energy, Carlsbad Field Office, Carlsbad, NM.

ECO 13396, *Placement of Concrete Jersey Barriers*, April 8, 2014, Nuclear Waste Partnership LLC, Carlsbad, NM.

ETO-C-118, *GAP Analysis of the AMEREX Fire Suppression Equipment installed on 74-C-270, Underground (u/G) Fire Suppression Vehicle*. Revision 0, Nuclear Waste Partnership LLC, Carlsbad, NM.

ETO-H-228, *Evaluation of the Stopping Distance of A Descending Waste Shaft Conveyance Utilizing Two Brake Units*, Revision 0, October 27, 2015, Nuclear Waste Partnership LLC, Carlsbad, NM.

ETO-Z-157, *Fire Protection Engineering Determination of Underground Diesel Powered Equipment that Require Automatic Fire Suppression System Installation and Underground Equipment Evaluated as NOT Requiring Automatic Fire Suppression System Installation*, Revision 2, Nuclear Waste Partnership LLC, Carlsbad, NM.

ETO-Z-277, Rev. 2, *Electric Fire Pump Operability*, Nuclear Waste Partnership LLC, Carlsbad, NM.

ETO-Z-229, Revision 1, *Fire Pump Discharge Required to Operate WHB 5th Floor Sprinkler System*, Nuclear Waste Partnership LLC, Carlsbad, NM.

ETO-Z-230, Revision 1, *WHB Operability Set Points*, February 2016, Nuclear Waste Partnership LLC, Nuclear Waste Partnership LLC, Carlsbad, NM.

ETO-Z-244, *Structural Evaluation of Support Building Integrity When Subjected to 27 psf Snow Load*, Revision 0, Nuclear Waste Partnership LLC, Carlsbad, NM.

HalfPACT-II Safety Analysis Report, Revision 6, March 2013.

HWFP, *Waste Isolation Pilot Plant Hazardous Waste Facility Permit* NM4890139088-TSDF (current revision), New Mexico Environment Department, Santa Fe, NM.

International Code Council, *International Building Code 2000*, Falls Church, VA.

M-07455080-Z, *Ederer Crane Serial No's F2789A & F2789B*, November 2010, PaR Systems.

Seismic Qualification, Ederer Crane Serial No's F2709 & F2710.

Manufacturer's Manual M1128, *Installation, Operating, and Maintenance Instructions for Disc Brake Caliper Type VS MK2*, Issue 2.

Mine Ventilation Services, Inc, *Modeling UVFS/IVS Fan Configuration with Various NVPs and Upset Conditions*. March 2016.

MRP No. 155, *A Site-Specific Study of Wind and Tornado Probabilities at the WIPP Site in Southeast New Mexico*, February 1978 and its Supplement of August 1978, Department of Geophysical Sciences, University of Chicago.

NFPA 13, *Standard for the Installation of Sprinkler Systems*, 1983 Edition, National Fire Protection Association, Quincy, MA.

NFPA 17, *Standard for Dry Chemical Extinguishing Systems*, National Fire Protection Association, Quincy, MA.

NFPA 20, *Standard for the Installation of Stationary Pumps for Fire Protection*, 1983 Edition, National Fire Protection Association, Quincy, MA.

NFPA 22, *Standard for Water Tanks for Private Fire Protection*, 2013 Edition, National Fire Protection Association, Quincy, MA.

NFPA 24, 2007, *Standard for the Installation of Private Fire Service Mains and Their Appurtenances*, 2007 Edition, National Fire Protection Association, Quincy, MA.

NFPA 25, *Standard for the Inspection, Testing, and Maintenance of Water Based Fire Protection Systems*, 2014 Edition, National Fire Protection Association, Quincy, MA.

NFPA 80A, 2007, *Recommended Practice for Protection of Buildings from Exterior Fire Exposures*, National Fire Protection Association, Quincy, MA.

NFPA 101, 2015, *Life Safety Code*, 2015 Edition, National Fire Protection Association, Quincy, MA.

NFPA 122, *Standard for Fire Prevention and Control in Metal/Nonmetal Mining and Metal Mineral Processing Facilities*, 2015 Edition, National Fire Protection Association, Quincy, MA.

NFPA 220, *Standard on Types of Building Construction*, 2006 Edition, National Fire Protection Association, Quincy, MA.

Radiological Control Position Paper 2001-03, *Shielding Analysis and Verification Process for the WIPP RH TRU Waste Handling Process*, Nuclear Waste Partnership LLC, Carlsbad, NM.

Radiological Control Position Paper 2002-03, *Final Results of the WIPP RH TRU Facility Penetration and Shielding Analysis*, Robert Hayes Ph D, July 15, 2002, Westinghouse TRU Solutions, LLC, Carlsbad, NM.

RH-TRU 27-B *Safety Analysis Report*, Revision 5, February 2011.

SDD -CF00-GC00, *Plant Buildings, Facilities, and Miscellaneous Equipment, System Design Description*, Nuclear Waste Partnership LLC, Carlsbad, NM.

SDD-FP00, *Fire Protection System, System Design Description*, Nuclear Waste Partnership LLC, Carlsbad, NM.

SDD-HV00, *Heating, Ventilation and Air Conditioning System, System Design Description*, Nuclear Waste Partnership LLC, Carlsbad, NM.

SDD-UH00, *Underground Hoisting, System Design Description*, Nuclear Waste Partnership LLC, Carlsbad, NM.

SDD-VU00, *Underground Ventilation, System Design Description*, Nuclear Waste Partnership LLC, Carlsbad, NM.

SDD WH00, *WIPP Waste Handling System, System Design Description*, Nuclear Waste Partnership LLC, Carlsbad, NM.

TRUPACT-II Safety Analysis Report, Revision 23, December 2012.

TRUPACT-III Safety Analysis Report, Revision 15, July 2013.

URS Letter of Transmittal: *Roof Study for Additional Loads*, March 20, 2006.

WHB Vehicle Barriers, Drawing 24-Z-044-W1, current Revision, Nuclear Waste Partnership LLC, Carlsbad, NM.

WIPP-001, *WIPP DSA Fire Event Accident Analysis Calculations*, Revision 8, Nuclear Waste Partnership LLC, Carlsbad, NM.

WIPP-014, *Fire Exposure Modeling for the WIPP Waste Handling Building* (current revision), Nuclear Waste Partnership LLC, Carlsbad, NM.

WIPP-017, *Waste Isolation Pilot Plant (WIPP) Documented Safety Analysis (DSA) Loss of Confinement (LOC) Event Hazard Analysis (HA) and Accident Analysis (AA) Calculations*, Revision 7, Nuclear Waste Partnership LLC, Carlsbad, NM.

WIPP-018, *Waste Isolation Pilot Plant (WIPP) Documented Safety Analysis (DSA) Explosion Event Hazard Analysis (HA) and Accident Analysis (AA) Calculations*, Revision 6, Nuclear Waste Partnership LLC, Carlsbad, NM.

WIPP-019, *WIPP DSA External Event and Natural Hazard Phenomena (NHP) Event Hazard Analysis (HA) and Accident Analysis (AA) Calculations*, Revision 6, Washington TRU Solutions LLC, Carlsbad, NM.

WIPP-023, Revision 7, *Fire Hazards Analysis for the Waste Isolation Pilot Plant*, June 2015.

WIPP-036, *Evaluation of Fire Involving Waste Handling Equipment*, Revision 1, Nuclear Waste Partnership LLC, Carlsbad, NM.

WIPP-051, *Scoping Calculations for MIN01-V.001 Waste for Closure of Panels 6 and 7*, Revision 1, Washington TRU Solutions LLC, Carlsbad, NM.

WIPP-058, *DSA Supporting Calculations, Fuel Spill, HEPA Filter Plugging, and Compartment Over Pressurization*, Revision 2, Nuclear Waste Partnership LLC, Carlsbad, NM.

This page intentionally left blank

Table of Contents

5.0 DERIVATIONS OF TECHNICAL SAFETY REQUIREMENTS 5-1
5.1 Introduction 5-1
5.2 Requirements 5-1
5.3 Technical Safety Requirement Coverage 5-2
5.4 Derivation of Process Areas and Facility Modes 5-5
5.4.1 Derivation of Process Areas 5-5
5.4.1.1 CH Bay 5-5
5.4.1.2 Room 108 5-5
5.4.1.3 RH Bay 5-5
5.4.1.4 Hot Cell Complex 5-5
5.4.1.5 Outside Area 5-6
5.4.1.6 Underground 5-6
5.4.1.7 Waste Shaft Access Area 5-6
5.4.2 Derivation of Facility Modes 5-6
5.4.2.1 Waste Handling Mode 5-7
5.4.2.2 Waste Storage Mode 5-8
5.4.2.3 Disposal Mode 5-8
5.4.2.4 Standby Mode 5-8
5.5 Technical Safety Requirements Derivation 5-8
5.5.1 Waste Handling Building Fire Suppression System (LCO 3.1.1) 5-9
5.5.1.1 Limiting Condition for Operation 5-11
5.5.1.2 Surveillance Requirements for the Waste Handling Building Fire Suppression System 5-12
5.5.2 Underground Vehicle/Equipment Fire Suppression Systems (LCO 3.1.2) 5-15
5.5.2.1 Limiting Condition for Operation 5-19
5.5.2.2 Surveillance Requirements for Underground Vehicle/Equipment Fire Suppression Systems 5-20
5.5.3 Contact-Handled Waste Handling Confinement Ventilation System (LCO 3.2.1) 5-22
5.5.3.1 Limiting Condition for Operation 5-24
5.5.3.2 Surveillance Requirements for the Contact-Handled Waste Handling Confinement Ventilation System 5-25
5.5.4 Hot Cell Complex Confinement Ventilation System (LCO 3.2.2) – DELETED 5-28
5.5.5 Underground Ventilation Filtration System/Interim Ventilation System (LCO 3.2.3) 5-28
5.5.5.1 Limiting Condition for Operation 5-31
5.5.5.2 Surveillance Requirements for Underground Ventilation Filtration System/Interim Ventilation System 5-34
5.5.6 309 Bulkhead Operability during Download of Waste Containers (LCO 3.2.4) 5-37
5.5.6.1 Limiting Condition for Operation 5-39

5.5.6.2 Surveillance Requirements for 309 Bulkhead Operability during Download of Waste Containers 5-40
5.5.7 Battery Exhaust Filtration System (LCO 3.2.5) 5-42
5.5.7.1 Limiting Condition for Operation 5-45
5.5.7.2 Surveillance Requirements for the Battery Exhaust Filtration System 5-46
5.5.8 Waste Hoist Brakes (LCO 3.8.1) 5-48
5.5.8.1 Limiting Condition for Operation 5-51
5.5.8.2 Surveillance Requirements for the Waste Hoist Brakes 5-52
5.5.9 Aboveground Liquid-fueled Vehicles/Equipment Prohibition (LCO 3.3.2) 5-54
5.5.9.1 Limiting Condition for Operation 5-55
5.5.9.2 Surveillance Requirements for Aboveground Liquid-fueled Vehicle/Equipment Prohibition 5-57
5.5.10 Vehicle Equipment Control in the Waste Shaft Access Area of the WHB (LCO 3.3.3) – DELETED 5-57
5.5.11 Control of Propane-powered Vehicles/Equipment (LCO 3.3.4) – DELETED 5-57
5.5.12 Underground Lube Truck Operations (LCO 3.3.5) 5-57
5.5.12.1 Limiting Condition for Operation 5-60
5.5.12.2 Surveillance Requirements for Underground Lube Truck Operations 5-61
5.5.13 Vehicles/Equipment (LCO 3.3.8) 5-61
5.5.13.1 Limiting Condition for Operation 5-63
5.5.13.2 Surveillance Requirements for the Vehicles/Equipment 5-64
5.5.14 Attendance of Area ≤ 25 feet of Contact-Handled Waste Containers when Vehicle/Equipment are Present (LCO 3.3.9) – DELETED 5-65
5.5.15 Fuel Confinement in the RH Bay (LCO 3.4.1) – DELETED 5-65
5.5.16 Fuel Barrier in the Underground (LCO 3.4.2) – DELETED 5-65
5.5.17 Contact-Handled Waste Handling (LCO 3.5.1) – DELETED 5-65
5.5.18 Waste Conveyance Operations (LCO 3.5.2 moved to DA SAC 5.5.6) 5-65
5.5.19 Waste Handling in the Outside Area (LCO 3.5.3) – DELETED 5-65
5.5.20 WIPP Waste Acceptability Control (LCO 3.7.1) 5-65
5.5.20.1 Limiting Condition for Operation 5-67
5.5.20.2 Surveillance Requirements for WIPP Waste Acceptability Control (SR 4.7.1) 5-68
5.6 Administrative Controls 5-70
5.6.1 Programmatic Administrative Controls 5-70
5.6.2 Specific Administrative Controls 5-71
5.6.2.1 Pre-Operational Checks of Vehicle(s)/Equipment in Proximity to Contact-Handled Waste (SAC 5.5.1) 5-71
5.6.2.2 Waste Handling Program – Pre-operational Inspections of Surface Waste Handling Vehicle/Equipment (SAC 5.5.2) – DELETED 5-73

5.6.2.3 Transuranic Waste Outside the Waste Handling Building (SAC 5.5.3) 5-73
5.6.2.4 Vehicle Exclusion Zone (SAC 5.5.4) 5-74
5.6.2.5 Fuel Tanker Prohibition (SAC 5.5.5) 5-75
5.6.2.6 Waste Conveyance Operations (SAC 5.5.6) 5-75
5.6.2.7 CH Bay Alternative Vehicle Barrier Provision (SAC 5.5.7) 5-77
5.6.2.8 Real-Time Monitoring at Panel 6 and Panel 7 Isolation Bulkheads (SAC 5.5.8) 5-78
5.6.3 Safety Management Programs 5-81
5.7 Design Features 5-84
5.7.1 Waste Handling Building Structure (DF 6.1) 5-85
5.7.2 TRUDOCK 6-ton Crane – DELETED 5-87
5.7.3 Facility Pallet (DF 6.3) 5-87
5.7.4 Underground Liquid-fueled Waste Handling Vehicles – DELETED 5-88
5.7.5 RH Bay Design – DELETED 5-88
5.7.6 Waste Hoist Support Structure (DF 6.6) 5-88
5.7.7 Underground Fuel and Oil Storage Areas (DF 6.7) 5-89
5.7.8 Facility Casks (DF 6.8) 5-89
5.7.9 Type B Shipping Package (DF 6.9) 5-90
5.7.10 Facility Cask Loading Room, Cask Unloading Room, and Transfer Cell Shielding (DF 6.10) 5-91
5.7.11 Panel 6 and Panel 7, Room 7 Bulkheads (DF 6.11) 5-92
5.7.12 Vehicle Barriers (DF 6.12) 5-93
5.8 Interface with Technical Safety Requirements from Other Facilities 5-94
5.9 References 5-94

List of Tables

Table 5.3-1. Summary of Technical Safety Requirement Controls 5-2
Table 5.4-1. Process Area Descriptions 5-5
Table 5.4-2. Mode Descriptions 5-6
Table 5.5-1. CH WH CVS, CMR Differential Pressure Instrumentation 5-22
Table 5.5-2. CH WH CVS, Local Differential Pressure Instrumentation 5-23
Table 5.5-3. Exhaust Fan and HEPA Filter Unit Alignments 5-30
Table 5.5-4. UVFS/IVS, CMR Differential Pressure Instrumentation 5-33
Table 5.5-5. UVFS/IVS, Local Differential Pressure Instrumentation 5-33
Table 5.5-6. 309 Bulkhead, CMR Differential Pressure Instrumentation 5-40
Table 5.5-7. 309 Bulkhead, Local Differential Pressure Instrumentation 5-40
Table 5.5-8. Battery Exhaust Filtration System, CMR Differential Pressure Instrumentation 5-44
Table 5.5-9. Battery Exhaust Filtration System, Local Differential Pressure Instrumentation 5-44

This page intentionally left blank

5.0 DERIVATIONS OF TECHNICAL SAFETY REQUIREMENTS

5.1 INTRODUCTION

This chapter of the Waste Isolation Pilot Plant (WIPP) Documented Safety Analysis (DSA) provides information that satisfies the requirements of Title 10, *Code of Federal Regulations* (CFR), Part 830, "Nuclear Safety Management," Subpart B, Section 204, "Documented Safety Analysis," for the development of the Derivation of Technical Safety Requirements (TSRs). This chapter builds on the control functions identified in Chapter 3.0, "Hazard and Accident Analyses, and Control Selection" and Chapter 4.0, "Safety Structures, Systems, and Components," to derive the safe operating envelope defined in the facility TSRs.

The facility TSR document is developed based on the information contained in this chapter and in DSA Chapters 2.0, 3.0, and 4.0 and their supporting analyses. This chapter summarizes the Structures, Systems, and Components (SSCs); Administrative Controls (ACs) [includes Safety Management Programs (SMPs) and Specific Administrative Controls (SACs)]; and design features (DFs) that are credited with preventing and mitigating accidents or hazards, and provides the necessary level of detail to determine which features of these SSCs, SACs, ACs, and DFs require TSR control.

Expected products of this chapter, as applicable and based on the graded approach, include the following information with a sufficient basis to derive, as appropriate, any of the following TSR parameters for individual TSR controls:

- Derivation of facility Modes and Process Areas (5.4).
- Safety Limits (SLs).
- Limiting Control Settings (LCSs).
- Limiting Condition for Operation (LCO) (5.5).
- Surveillance Requirements (SRs) (5.5).
- Information with a sufficient basis to derive TSR ACs for SAC features or to specify programs necessary to perform institutional safety functions Programmatic Administrative Controls (5.6).
- Identification of TSR controls for passive DFs addressed in the DSA (5.7).
- Identification of TSR controls from other facilities that could affect the WIPP safety basis (5.8).

No Safety Class (SC) controls were identified in Chapter 4.0. Therefore the SLs and LCSs are not applicable to the WIPP TSR. Additionally, no nearby facilities exist that could affect the WIPP safety basis.

5.2 REQUIREMENTS

The content, format, and graded-approach guidelines for identifying TSRs in this chapter have been specifically developed in accordance with requirements of the following codes, standards, and regulatory documents:

- 10 CFR 830, "Nuclear Safety Management."
- DOE Order 420.1C, *Facility Safety*.

- DOE-STD-3009-2014, *Preparation of Nonreactor Nuclear Facility Documented Safety Analysis.*
- DOE-STD-1186-2004, *Specific Administrative Controls.*
- DOE Guide 421.1-2A, *Implementation Guide for Use in Developing Documented Safety Analyses to Meet Subpart B of 10 CFR 830.*
- DOE Guide 423.1-1B, *Implementation Guide for Use in Developing Technical Safety Requirements.*

5.3 TECHNICAL SAFETY REQUIREMENT COVERAGE

This section presents the TSR controls identified in Chapters 3.0 and 4.0. Chapter 3.0 identifies the controls necessary to prevent and/or mitigate potential hazardous events evaluated in this DSA. Chapter 3.0 identifies the safety function of SSCs that are SC and Safety Significant (SS). Chapter 3.0 also identifies the safety function of SACs that would be SC and SS if the function was performed by an SSC. Chapter 4.0 systematically evaluates the credited SSCs and SACs identified in Chapter 3.0.

Table 5.3-1 provides a listing of controls (SSCs and ACs) along with the applicable hazard analysis event(s), and the associated TSR control (LCO, SAC, DF). For further information regarding the specific hazards that these controls prevent or mitigate, refer to Chapters 3.0 and 4.0. See Tables 4.4-1 and 4.5-1 for the listing of the hazard events and the related SSC and SAC controls.

Table 5.3-1. Summary of Technical Safety Requirement Controls

Control	Applicable Hazard Analysis Event(s)	Associated TSR Control (e.g., LCO, SAC, DF)
Waste Handling Building (WHB) Fire Suppression System (FSS)	• External fire • Ordinary combustible fire • Pool fire (impact) • Pool fire (no impact)	LCO 3.1.1
Underground (UG) Vehicle/Equipment FSSs	• Pool fire (impact) • Pool fire (no impact)	LCO 3.1.2
Contact-Handled (CH) Waste Handling (WH) Confinement Ventilation System (CVS)	• Internal container fire • Ordinary combustible fire	LCO 3.2.1
UG Ventilation Filtration System (UVFS)/Interim Ventilation System (IVS)	• Internal container deflagration/overpressurization • Ordinary combustible fire • Pool fire (no impact) • Loss of Confinement	LCO 3.2.2 – Deleted LCO 3.2.3
309 Bulkhead Operability during Download of Waste Containers	• Ordinary combustible fire	LCO 3.2.4
Battery Exhaust Filtration System	• Vehicle collision with fire • Ordinary combustible material fire • Internal CH Waste Container fire	LCO 3.2.5
Aboveground Liquid-fueled Vehicle/ Equipment Prohibition	• Pool fire (impact) • Pool fire (no impact)	LCO 3.3.1 – Deleted LCO 3.3.2 (combined LCOs 3.3.2 and 3.3.3)

Control	Applicable Hazard Analysis Event(s)	Associated TSR Control (e.g., LCO, SAC, DF)
UG Lube Truck Operations	• Pool fire (impact) • Pool fire (no impact)	LCO 3.3.4 – Deleted LCO 3.3.5 LCO 3.3.6 – Deleted LCO 3.3.7 – Deleted
Liquid-fueled Vehicle/Equipment, combines from Chapter 4.0: Limit of Two Liquid-fueled Vehicles/ Equipment within 25 feet of CH Waste Face Attendance of Liquid-fueled Vehicles/ Equipment in the UG Attendance of Vehicles/Equipment in the RH Bay	• Pool fire (impact) • Pool fire (no impact)	LCO 3.3.8
Fuel Confinement	• Deleted	LCO 3.4.1 – Deleted LCO 3.4.2 – Deleted
Waste Handling	• Deleted	LCO 3.5.1 – Deleted LCO 3.5.2 – Deleted LCO 3.5.3 – Deleted
Compressed Gas Cylinder Program	• Deleted	LCO 3.6.1 – Deleted LCO 3.6.2 – Deleted LCO 3.6.3 - Deleted
WIPP Waste Acceptability Control	• All event types	LCO 3.7.1
Waste Hoist Brakes	• Impact	LCO 3.8.1
Pre-operational Checks of Vehicle(s)/Equipment in Proximity to CH Waste	• Pool fire (impact) • Pool fire (no impact)	SAC 5.5.1
Waste Handling Program – Pre-inspections of Surface Waste Handling Vehicle/Equipment	• Deleted	SAC 5.5.2 – Deleted
Transuranic (TRU) Waste Outside the WHB	• External fire • Impact • Impact with fire • Internal container deflagration • Internal container fire • Ordinary combustible fire • Pool fire	SAC 5.5.3
Vehicle Exclusion Zone (VEZ)	• Pool fire (impact) • Pool fire (no impact)	SAC 5.5.4
Fuel Tanker Prohibition	• Pool fire	SAC 5.5.5
Waste Conveyance Operations	• Impact • Pool fire (impact)	SAC 5.5.6

Control	Applicable Hazard Analysis Event(s)	Associated TSR Control (e.g., LCO, SAC, DF)
CH Bay Alternative Vehicle Barrier Provision	• External fire • Impact with fire • Pool fire (impact)	SAC 5.5.7
Real-Time Monitoring at Panel 6 and Panel 7 Isolation Bulkheads	• Internal container deflagration / exothermic chemical reaction	SAC 5.5.8
WHB Structure High wind / tornado Non-combustible construction Roof loading Seismic Waste Shaft Access	• External fire • Loss of confinement • Impact • Impact with fire • Pool fire (impact) • External – Range fire • Natural Phenomenon Hazards (NPHs) – High wind, tornado, lightning, snow, ice, seismic	DF 6.1
TRUPACT-II Unloading Dock (TRUDOCK) 6-ton Cranes	• Deleted	DF 6.2 – Deleted
Facility Pallet	• Pool fire (no impact)	DF 6.3
UG Liquid-fueled Waste Handling Vehicles	• Deleted	DF 6.4 – Deleted
Remote-Handled (RH) Bay Design	• Deleted	DF 6.5 – Deleted
Waste Hoist Support Structure	• Impact • NPH • Fire	DF 6.6
UG Fuel and Oil Storage Areas	• Explosive impact • Pool fire	DF 6.7
Facility Casks	• Direct exposure • Pool fire (impact) • Pool fire (no impact) • Impact • NPH • Internal deflagration • Ordinary combustible fire	DF 6.8
Type B Shipping Package	• All event types	DF 6.9
Facility Cask Loading Room (FCLR), Cask Unloading Room (CUR), and Transfer Cell Shielding	• Direct exposure	DF 6.10
Panel 6, and Panel 7, Room 7 Bulkheads	• Internal container deflagration/ exothermic chemical reaction	DF 6.11
Vehicle Barriers	• External fire • Impact with fire • Pool fire (impact)	DF 6.12

5.4 DERIVATION OF PROCESS AREAS AND FACILITY MODES

5.4.1 Derivation of Process Areas

Process Areas are established to provide distinct hazard zones or physically separated areas relevant to the events identified in Chapter 3.0.

Table 5.4-1 describes the Process Areas defined for WIPP. Each of these Process Areas below is described in Chapter 2.0 of this DSA.

Table 5.4-1. Process Area Descriptions

Process Area Name	Process Area Description
CH Bay	Area of the WHB used for CH Waste Handling Activities.
Room 108	Area within the WHB used for CH Waste Handling Activities for TRUPACT-III.
RH Bay	Area of the WHB used for RH Waste Handling Activities.
Hot Cell Complex	Area of the WHB that includes the Transfer Cell, Cask Unloading Room (CUR), and the Upper Hot Cell.
Outside Area	The aboveground areas external to the WHB, within the Property Protection Area.
UG	The Waste Shaft, Waste Shaft Station, Transport Path, and Disposal Room(s).
Waste Shaft Access Area	Area of the WHB that includes the FCLR, Conveyance Loading Room (CLR), Waste Shaft Collar Room, and Waste Hoist Tower.

5.4.1.1 CH Bay

An area of the WHB used for removing CH Waste assemblies from TRUPACT-IIs, TRUPACT-IIIs and HalfPACTs and preparing them for disposal. CH Waste is removed from TRUPACT-IIs and HalfPACTs at a TRUDOCK station and placed on a Facility Pallet. After a Waste load is prepared on the Facility Pallet, the Facility Pallet is stored or moved to the Waste Shaft Access Area for Downloading.

5.4.1.2 Room 108

A room in the WHB used for removing standard large box 2s (SLB2s) from TRUPACT-IIIs and placing the SLB2 on a Facility Pallet. After a SLB2 is placed on a Facility Pallet, the Facility Pallet is moved into the CH Bay for storage or moved to the Waste Shaft Access Area for Downloading.

5.4.1.3 RH Bay

An area of the WHB used for removing RH-TRU 72-B Shipping Containers from the transport trailer. The impact limiters and outer lid are removed from the RH-TRU 72-B road Cask, and then the Cask is moved into the Hot Cell Complex for processing.

5.4.1.4 Hot Cell Complex

The Hot Cell Complex is a series of shielded rooms, inside the WHB, used for transferring the RH Waste from the 72-B road Cask to the Facility Cask. The RH 72-B road cask is moved from the CUR, placed in the Transfer Cell and moved to a position under the FCLR.

5.4.1.5 Outside Area

The Outside Area is the aboveground areas external to the WHB, and within the Property Protection Area. Buildings and areas include: the Support Building, Exhaust Filter Building, TRUPACT Maintenance Facility (TMF), and WHB Parking Area Unit.

5.4.1.6 Underground

The UG is the area beneath the surface of the ground where Waste can be moved and emplaced. The areas include the Waste Shaft, Waste Shaft Station, Transport Path, and Disposal Room(s). There are other areas beneath the surface of the ground that are not considered in the UG Process Area, including the other shafts, experimental facilities, support facilities, Fuel and Oil Storage Area, and Construction Areas.

5.4.1.7 Waste Shaft Access Area

The Waste Shaft Access Area includes the FCLR, CLR, Waste Shaft Collar Room, and Waste Hoist Tower. The FCLR is the room where the RH canister is loaded into the Facility Cask and prepared for transfer to the UG via the Waste Shaft Conveyance. The CLR is the room where a CH Waste loaded Facility Pallet is prepared for transfer to the UG via the Waste Shaft Conveyance. The Waste Shaft Collar Room is where the Waste Shaft Conveyance is positioned and Waste is loaded onto the Waste Shaft Conveyance. The Waste Hoist Tower contains the Waste Hoist Master Control Station, the support frame and support components for the Waste Hoist.

5.4.2 Derivation of Facility Modes

Operational Modes are established to provide a safe, structured approach to facility operation. Modes reflect the relative hazards associated with different facility or process configurations, and categorize the requirements placed on the facility.

Table 5.4-2 describes the Modes of operation defined for the WIPP.

Table 5.4-2. Mode Descriptions

Mode	Condition
WASTE HANDLING	A Mode in which Waste is permitted to be handled, stored, or placed in a storage configuration, or moved outside of a Closed Shipping Package or magnesium oxide (MgO) may be placed in an Active Room.
WASTE STORAGE	A Mode in which Waste may be temporarily stored, but no Waste Handling Activities are permitted. Waste may be outside of a Closed Shipping Package. Site-derived Waste (when present in the CH Bay or RH Bay) must be in a Closed Waste Container.
DISPOSAL	A Mode in which no Waste Handling Activities are permitted in the UG.
STANDBY	A Mode in which Waste is not permitted to be present unless in a Closed Shipping Package. Site-derived Waste (when present in the CH Bay or RH Bay) must be in a Closed Waste Container.

The hierarchy of Modes from the highest to the lowest in relation to hazards is Waste Handling, Waste Storage, Disposal, and Standby. Mode changes are administrative declarations made by the WIPP Facility Shift Manager (FSM) or designee. There are certain requirements and characteristics that will be present

during each Mode. The applicable Modes vary by Process Area as each Process Area may be in the same Mode or a different Mode depending on activities allowed to be conducted in the Process Area.

5.4.2.1 Waste Handling Mode

Waste Handling Mode activities may include unloading, transferring, handling, storing, emplacing, retrieving, and loading CH Waste. Other activities allowed in this Mode are maintenance, repair, and inspections as long as these activities are not in conflict with the requirements in the TSR. This Mode does not apply to Closed Shipping Packages.

Waste Handling Mode is applicable to the Process Areas of the CH Bay, Room 108, the Waste Shaft Access Area, and in the UG when moving Waste outside the Closed Transuranic Package Transporter Model II (TRUPACT-II), Half-Package Transporter (HalfPACT), or Transuranic Package Transporter Model III (TRUPACT-III). While in this Mode, CH Waste assemblies including shielded containers are permitted to be:

- Unloaded from a Shipping Package, or loaded into a Shipping Package.
- Moved for Facility Pallet loading, reconfiguration, stacking, or placement in a safe configuration.
- Moved on Facility Pallets to the WHB storage areas.
- Loaded on the Conveyance Loading Car and onto the Waste Shaft Conveyance.
- Moved to or from the UG or within the CH Bay and Room 108.
- Offloaded from or onto the Waste Shaft Conveyance.
- Transitioned from the clean to the contaminated side for Panel 7 disposal.
- Moved to or from the Active Room (room or panel that contains TRU Waste and is not filled or isolated by a barrier, see TSR definition).
- Emplaced or retrieved.
- Placement of MgO sacks in an Active Room.

Waste Handling Mode is also applicable to the RH Bay, Transfer Cell and CUR, Shaft Access Area and UG. While in this Mode, the following activities are permitted:

- Preparing Shipping Packages for the removal or reloading of RH Waste canisters.
- Moving RH Waste canisters:
  - Moving RH Waste in the Transfer Cell.
  - Processing an RH-TRU 72-B Road Cask in the Transfer Cell.
  - Loading or unloading an RH Canister into the RH Facility Cask.
  - Offloading from or onto the Waste Shaft Conveyance.
  - Moving RH Waste to or from the UG on the Waste Shaft Conveyance.
- Transporting the RH Facility Cask between the Waste Shaft Station and the Active Room.
- Emplacing or retrieving an RH Waste canister into or from a disposal borehole.
- Emplacing or retrieving RH borehole shield plugs.
- Returning RH Waste to the surface.

5.4.2.2 Waste Storage Mode

While in the Waste Storage Mode, CH and RH Waste are not allowed to be physically handled, moved, or transported, but can be stored outside the Closed Shipping Package. Other activities, such as maintenance, repair, and inspections, are allowed as long as these activities do not conflict with the requirements in the TSR. Site-derived Waste (when present in the CH Bay or RH Bay) must be in a Closed Waste Container. The Waste Storage Mode is applicable to the Process Areas of the CH Bay, Room 108, RH Bay, CUR, and Transfer Cell, and Waste Shaft Access Area FCLR.

5.4.2.3 Disposal Mode

While in Disposal Mode, CH and/or RH Waste may not be unloaded, moved through the Transport Path, (route below ground that the Waste travels during Waste Handling Activities) or emplaced in the Active Disposal Rooms. Other activities, such as mining, ground control, maintenance, repair, and inspections, are allowed as long as these activities do not conflict with the requirements in the TSR. The Disposal Mode only applies to the UG Process Area.

5.4.2.4 Standby Mode

While in the Standby Mode, Waste is not permitted to be outside a Closed Shipping Package. Site-derived waste can be present outside a Closed Shipping Package, provided it is in a Waste Container with the lid Closed. Standby Mode is the safest Mode for the WHB because all shipped Waste is inside Closed Shipping Packages. While in this Mode, RH Waste is in the Type B Shipping Package on a trailer with impact limiters in place or on a Road Cask Transfer Car (RCTC) with no lid bolts loosened. Therefore, the postulated events in Chapter 3.0 involving Waste do not result in a release. Site-derived Waste (when present in the CH Bay or RH Bay) must be in a closed Waste Container. Other activities, such as maintenance, repair, and inspections, are allowed as long as these activities do not conflict with the requirements in the TSR. The Standby Mode is applicable to the Process Areas of the CH Bay, Room 108, Waste Shaft Access Area, RH Bay, and Hot Cell Complex.

5.5 TECHNICAL SAFETY REQUIREMENTS DERIVATION

The derivation of the TSRs is organized by specific design or administrative features identified in Section 5.3. Chapter 4.0 provides a description of the system or equipment and its functionality, system evaluation, and justification for the TSR. SACs have been presented in LCO format and in Directive Action SAC format.

SLs are limits on process variables associated with those physical barriers that, if exceeded, could directly cause the failure of one or more barriers that prevent the uncontrolled release of radiological or other hazardous materials (HAZMAT), with the potential for consequences to the public above specified guidelines. LCSs are settings on safety systems that control process variables to prevent exceeding SLs. Since no SLs are identified for the WIPP, no LCSs are required.

LCOs are the limits “that represent the lowest functional capability or performance level of SSCs required for safe operation (10 CFR 830.3).” LCOs delineate the minimum conditions necessary to ensure that the Initial Conditions (ICs) assumed in the analysis remain intact and Operability of an SSC is verified, or the conditions of a SAC are met. LCOs include specific actions to be taken if minimum conditions as noted in associated SRs are not met. An LCO on a system provides the specific response necessary to compensate for the loss of safety function.

SRs are used to ensure Operability or availability of the safety SSCs and SACs identified in the Operating Limits. SRs are most often used in LCOs to periodically validate the Operability of SSCs that are subject to limiting conditions. SRs consist of short descriptions of the surveillance required and the frequency of performance of that SR. These statements should identify those requirements needed to ensure compliance with the Operating Limits.

A Directive Action SAC provides a specific preventive or mitigative function for accident scenarios identified in the DSA, where the safety function has importance similar to, or the same as, the safety function of a safety SSC. A Directive Action SAC is placed in the AC section of the TSRs. The Directive Action SAC identifies the specific requirement/action and basis. This format is appropriate when it is essential that the SAC be performed when called upon every time and without any delay, or when a definitive program requirement(s) for specific activities is stated. The Directive Action SAC is provided in a format as documented in Subsection 5.6.2 of this chapter to include title, control description, and corresponding basis.

This section derives the controls identified in Table 5.3-1. The TSR derivations are presented in the following order:

- Sections 5.5.1 through 5.5.20 address LCOs and associated SRs for SSCs and SACs.
- Sections 5.6.1 through 5.6.3 address Programmatic Administrative Controls, Directive Action SACs, and SMPs.
- Section 5.7 addresses DFs.

5.5.1 Waste Handling Building Fire Suppression System (LCO 3.1.1)

Control Description: The FSS for the WHB shall be Operable.

The safety function of the WHB FSS is to prevent a small fire from becoming a large fire causing the release of radiological materials in the WHB by detecting fires and discharging water on the affected area, thereby reducing the likelihood of large fires.

The WHB FSS design meets applicable U.S. Department of Energy (DOE) orders by compliance with applicable portions of National Fire Protection Association (NFPA) 13-1983 (code of record). One exception in NFPA 13 compliance is pumping capability. NFPA 13 requires including firefighting hose capacity in addition to the FSS sprinkler requirements in determining the required pumping capacity. This LCO only considers the FSS sprinkler pumping capacity requirements that are needed to perform the credited safety function and not the additional firefighting hose capacity. The WHB FSS, with the exception of the RH-Bay section, is a SS SSC.

The WHB FSS (SDD FP00), *Fire Protection Systems, System Design Description*, includes portions of the (SDD WD00) *Water Distribution System*, (FP01) *Fire Water Supply and Distribution System*, and (FP02) *Fire Suppression System*. The WHB FSS includes the Fire Water Storage Tank, electric and diesel driven fire water pumps, distribution piping, (from fire water tank to sprinkler heads), post indicator valves (PIVs) that are part of the Fire Water Supply and Distribution System, and associated sprinklers heads. The boundary of the WHB FSS includes the supply risers and distribution piping with sprinklers that provide fire suppression capability to the WHB. Three risers, one in Room 108, one in the CH Bay, and one in the RH Bay, supply the WHB. The RH Bay riser and associated piping and sprinklers are not credited in the safety analysis.

The WHB is equipped with three wet-pipe sprinkler systems. These sprinkler systems are supplied from 6-inch mains, which are connected to the 10-inch mains of the Site's fire water distribution system that are located south, north, and east of the building. PIVs are supplied for system isolation. All WHB hose stations are disabled and no longer used. An interior aboveground water supply extension connects the water supply of Room 108 to the water supply of the CH Bay riser. This 6-inch galvanized steel line with isolation valves provides a redundant water supply to the WHB systems and provides an additional water supply loop segment. The WHB FSS sprinkler systems are designed as Ordinary Hazard Group 1 and Group 2 per NFPA 13, *Standard for Installation of Sprinkler Systems*.

The fire water supply and distribution consists of a water tank, two fire pumps, a pressure maintenance jockey pump, and a loop yard piping distribution system. The Fire Water Supply System receives its normal water supply from an onsite, nominal 180,000-gallon aboveground Fire Water Storage Tank. This tank is configured to supply the fire pumps in parallel, flowing water into a common supply header shared by both fire pumps. Each of the process area sprinklers is provided an inspector's test valve that is located on the end of the branch line most remote from the sprinkler riser. For the Room 108 system, Valve FW-411-V-062 is used. For the CH Bay two valves are provided: FW-411-V-023 and FW-412-V-002.

A fire water level instrumentation for the Fire Water Storage Tank, loop 25F00601 (Level transmitter, 456-LT-006-001, CMR indicator, AK0601 and Local indicator, 456-LI-006-001) provides an indication in the central monitoring room (CMR) and locally. The instrument loop includes the level transmitter, level indicator in the CMR and local indicator. To support the backfit analysis results for the CMS and associated instrumentation vulnerabilities, the requirement for local indication was implemented in the system design. The local indication is used to assist in addressing the vulnerabilities in the CMS with respect to satisfying the SS classification of the equipment. The local indication is available from the associated level indicating transmitter. The level indicating transmitter has been upgraded to support a SS classification.

There are two fire pumps (electric-motor-driven and diesel-engine-driven) in the WHB FSS, and both of these fire pumps are required to be operable for the FSS to be considered operable. The fire pumps are configured to start on demand via a drop in pressure from the fire water main. This drop in pressure may be activated by either the opening of a fire hydrant or by the activation of a sprinkler system. The fire pump starting sequence is the electric-motor-driven pump first and the diesel-engine-driven pump second. This start sequence saves wear on the diesel pump. Each pump is tested to verify it can deliver greater than or equal to 490 gallons per minute (gpm) at greater than or equal to 120 pounds per square inch gauge (psig) at the most demanding riser (Room 108) to meet maximum sprinkler demand as confirmed per ETO-Z-229, Rev. 1, *Fire Pump Discharge Required to Operate WHB 5th Floor Sprinkler System* and satisfy the credited safety function.

Operation of the two fire pumps and the jockey pump is controlled by distribution system pressure changes. The pumps are arranged for sequential operation. Under normal conditions, the jockey pump operates to maintain the designed system static pressure. The jockey pump starts when the system pressure falls to less than 140 psig and stops at greater than or equal to 150 psig (SDD FP00, *Fire Protection System, System Design Description*). The jockey pump is used to prevent the large fire pumps from experiencing an excessive number of starts for minor pressure fluctuations. The jockey pump does not serve a credited safety function and is not designated as SS.

Should there be a demand for fire water that exceeds the capacity of the jockey pump, the fire water demand will cause the system pressure to drop, which automatically starts a fire pump. Per NFPA 20, the electric fire pump is arranged to start automatically before the system pressure falls to less than 135 psig.

The diesel fire pump is arranged to start automatically before the system pressure falls to less than 125 psig.

The fire water supply system piping configuration allows either fire pump to be removed from service without affecting the operation of the other fire pump. Additionally, the fire pumps can discharge through either pipeline exiting the pump house via the discharge piping cross-connect.

The diesel-driven pump must have enough diesel fuel to run for at least 90 minutes at 100 percent of the rated pump capacity. The 90-minute requirement is based on NFPA 13-1983 (code of record). This translates to a fuel level in the existing tank of 11 inches. The fuel level of greater than or equal to 12 inches conservatively accounts for errors in reading the fuel level (ETO-Z-230, Rev. 2, *LCO 3.1.1 Set Point Determination Calculation*). The fuel level is read by use of a fuel "dip stick," which is essentially a wooden yard stick.

Additional WHB FSS description information is contained in Chapter 4.0, Section 4.4.3.2, and Chapter 2.0, Section 2.8.2, of this DSA and the design parameters for the WHB FSS are described in SDD FP00.

5.5.1.1 Limiting Condition for Operation

The WHB FSS shall be Operable. An Operable WHB FSS requires:

- One unobstructed flow path from Tank 25-D-001A to the applicable Process Area sprinklers.

  There is one Fire Water Storage Tank with a nominal capacity of 180,000 gallons. The Fire Water Storage Tank, 25-D-001A, is connected via existing piping to the WHB FSS. The CH Bay riser provides fire water to the CH-Bay and the Room 108 riser provides fire water to Room 108, a portion of the CH Bay, and in the Waste Shaft Access Area (including the Waste Shaft Tower). There are no valves that could obstruct flow between the risers and the sprinkler heads. ETO-Z-229, Rev. 1 analyzed five possible flow paths from the Fire Water Storage Tank to the sprinkler heads and showed that if the fire pump meets the hydraulic requirements of the FSS SRs (which are based on the most hydraulically demanding of the five flow paths) then the FSS can perform its safety function using any of the five flow paths. Periodic verification is made that the valves providing at least one unobstructed flow path analyzed in ETO-Z-229, Rev. 1 from the Fire Water Storage Tank to the applicable Process Area sprinklers are locked in the proper position per Table 1 of ETO-Z-229, Rev. 1. The proper position may require the valve to be open or closed. In addition, a riser Main Drain Test verifies flow to each of the required risers Annually and whenever system alignment is changed.

- Two fire pumps (45-G-601 and 45-G-602) each with a capability to deliver greater than or equal to 490 gpm to the Room 108 riser at greater than or equal to 120 psig.

  Each of the two fire pumps is capable of supplying the required flow and pressure to the risers. Both the electric-driven fire pump 45-G-601 and diesel-driven fire pump 45-G-602 are designed to provide greater than or equal to 490 gpm to the Room 108 riser at greater than or equal to 120 psig. The Room 108 riser feeds the fifth floor of the Waste Hoist Tower, which represents the most demanding design area for fire suppression. The 490 gpm and 120 psig requirements provide the design density suppression at each fifth floor sprinkler head (ETO-Z-229, Rev. 1). This required capability is determined without accounting for firefighting hoses during fire fighter response. The system will be declared inoperable anytime a hydrant is open (e.g., during hydrant testing).

- Fire pump auto-start capability at a set point greater than or equal to 125 psig.

  The electric-motor driven pump and the diesel-engine driven pump each have an auto-start capability based on pressure drop in the FSS. The set points for the individual pump auto-start pressure switches are calculated in ETO-Z-230, Rev. 2, and set at greater than or equal to 125 psig in accordance with NFPA 20 to minimize pressure excursions.

- Fire Water Storage Tank 25-D-001A level indication of greater than or equal to 51 percent.

  A water supply capacity of at least 72,180 gallons is required. The 72,180 gallon requirement is based on the maximum water demand (at any pressure) of 802 gpm for 90 minutes (WIPP-023, *Fire Hazard Analysis for the Waste Isolation Pilot Plant* (FHA)). The 802 gpm value is documented in WIPP-023, Rev. 7, Table 7.2-1 "WIPP Major Surface Building Water Requirements." The 802 gpm comes from the hydraulic calculations for the Waste Hoist Tower 4th floor sprinkler systems and is the bounding flow rate for any of the credited FSS areas in the WHB. This flowrate value includes the 250 gpm hose flow requirement. The 90-minute requirement is based on NFPA 13-1983 (code of record) (ETO-Z-230, Rev. 2, *LCO 3.1.1 Set Point Determination Calculation*). Fire Water Storage Tank 25-D-001A has a capacity of 180,000 gallons. The required level is 50 percent, which includes a 3-foot height above the tank bottom to the position of the vortex plate, and applying an instrument uncertainty (ETO-Z-230, Rev. 2), which results in a value of 51 percent.

- Level indication for Fire Water Storage Tank, loop 25F00601 (Level transmitter, 456-LT-006-001, CMR indicator, AK0601, and Local indicator, 456-LI-006-001).

  These level indicators are used to verify that the level in the Fire Water Storage Tank is greater than or equal to 51 percent. The instrument loop includes the level transmitter, level indicator in the CMR and local indicator.

5.5.1.2 Surveillance Requirements for the Waste Handling Building Fire Suppression System

Fire Water Capacity (CMR) (SR 4.1.1.1)

The fire water distribution system is required to have greater than or equal to 72,180 gallons of water available for 90 minutes of fire protection. This SR verifies Each Shift that the level in the Fire Water Storage Tank is greater than or equal to 51 percent using the level indicator in the CMR (CMR indicator, AK061). The 51 percent level accounts for instrument uncertainty (ETO-Z-230, Rev. 2). This SR ensures a sufficient supply of fire water is available within the water distribution system for at least 90 minutes of usage. The Fire Water Storage Tank water level history demonstrates that it is stable with only gradual changes, well trended variations over time. Therefore, performance of this SR Each Shift is sufficient to ensure adequate fire water supply.

Fire Water Capacity (Local) (SR 4.1.1.2)

The fire water distribution system is required to have greater than or equal to 72,180 gallons of water available for 90 minutes of fire protection. This SR verifies Daily that the level in the Fire Water Storage Tank is greater than or equal to 51 percent using the local level indicator (local indicator, 456-LI-006-001). The 51 percent level accounts for instrument uncertainty (ETO-Z-230, Rev. 2). This SR ensures a sufficient supply of fire water is available within the water distribution system for at least 90 minutes of usage. The Fire Water Storage Tank water level history demonstrates that it is stable with only gradual changes, well trended variations over time. In addition, this level is checked Each Shift using the CMR indication per SR 4.1.1.1. Therefore, performance of this SR Daily is sufficient to ensure adequate fire water supply.

Automatic Start Test (SR 4.1.1.3)

An automatic start test is required on each of the two available fire pumps [45-G-601 (electric) and the 45-G-602 (diesel)]. This automatic start test is performed to verify that each fire pump automatically starts before system pressure decreases below the set point of greater than or equal to 125 psig (ETO-Z-230, Rev. 2) and runs for the prescribed run time per NFPA 20 code of record (7 minutes for the electric pump; 30 minutes for the diesel pump). To perform the test, a valve is opened down stream of each pump to reduce the system pressure until the pump automatically starts. The system pressure at which the pump starts and pump parameters during the run time, are recorded to complete the surveillance. During the pump run, observations are made periodically and adjustments are conducted per NFPA 25 and any abnormalities are recorded. This ensures that any pump maintenance issues are detected and provides assurance that the pump can run for 90 minutes if required. The pressure gauge used must be Calibrated and the reading must take instrument uncertainty into consideration. A minimum Frequency of Weekly is required per NFPA 25, *Standard for the Inspection, Testing, and Maintenance of Water-based Fire Protection Systems.*

Diesel Fuel Supply Tank (SR 4.1.1.4)

An inspection of the diesel fire pump fuel tank (45-D-601) is required to verify that the tank has greater than or equal to 12 inches of diesel fuel available for the diesel-driven fire pump to be Operable. The fuel level is checked by reading a dip stick. The 12-inch minimum fuel conservatively accounts for errors in reading the fuel level (ETO-Z-230, Rev. 2). This fuel level is sufficient to allow the diesel-driven fuel pump to operate for at least 90 minutes per the requirements of NFPA 13-1983 (code of record). The diesel-driven fire pump is normally shutdown and is operated periodically for testing per NFPA 25. This SR verifies Weekly that the required amount of diesel fuel is present. The Weekly Frequency has been determined to be adequate based upon operational experience and can be checked after the weekly automatic pump start test.

Fire Water System Lineup (SR 4.1.1.5)

This SR verifies Monthly that the valves providing at least one of the five unobstructed flow paths analyzed in ETO-Z-229, Rev. 1, from Fire Waste Storage Tank 25-D-001A to the applicable Process Area sprinklers are locked in the proper position providing assurance of an unobstructed flow path of water supply to the sprinklers. Calculation ETO-Z-229 provides several flow paths that are adequate to satisfy a flow path from the Fire Water Storage Tank to the risers. Only one flow path needs to be verified. These valves must be locked in the proper position or entry into the applicable LCO Condition is required as the systems will not be Operable. Verification that these valves are in the proper position is made by visually verifying that each of the valves are in the proper position and locked during a walk down of the system. The Frequency of Monthly has been determined to be adequate based on NFPA 25 criteria for locked control valves and operational experience.

Inspector's Test Valve Flow (SR 4.1.1.6)

The FSS requires indication of water flow when the inspector's test valve is opened for each riser. This SR opens the inspector's test valve on a Semiannual basis and verifies the flow of fire suppression water from the inspector's test connection orifice indicating that there is a flow path in the piping from the riser to the sprinklers. Each of the process area sprinklers is provided an inspector's test valve that is located on the end of the branch line most remote from the sprinkler riser. For the Room 108 system, Valve FW-411-V-062 is used. For the CH Bay two valves are provided: FW-411-V-023 and FW-412-V-002. The Semiannual Frequency meets the requirements of NFPA 25, *Standard for the Inspection, Testing, and Maintenance of Water-based Fire Protection Systems*.

Main Drain Test (SR 4.1.1.7)

A Main Drain Test for the CH Bay and Room 108 risers shall be performed Annually and upon any FSS alignment change affecting the flow path last verified by SR 4.1.1.5. The Main Drain Test for each riser provides reasonable assurance that the supply side of the system is correctly aligned and free of obstructions, and allows trending of the test results to monitor for degradation of the water supply system. The Main Drain Test results must show less than a 10 percent reduction of full flow pressure when compared to the original acceptance test or the previous satisfactory comparable test. The test is performed by fully opening the main drain valve (FW-411-V-003 for the CH Bay riser or FW-411-V-012 for the Room 108 riser) and measuring residual pressure at the riser (411-PI-003-001 for the CH Bay riser or 411-PI-003-003 for the Room 108 riser). The pressure measurements shall account for associated instrument uncertainty. Pressure variations are observed when flowing water through the 2-inch main drain valve at each riser. A fully or partially closed valve or other obstruction in the supply piping will cause an abnormally large drop in full flow pressure of the 2-inch main drain when opened. Normal variations in pressure indicate that all valves in the flow path from the supply tank up to the sprinkler riser are open and that no other obstructions in the piping leading to the sprinkler riser exist. The Frequency of Annually and upon any FSS alignment change is based on NFPA 25.

Water Storage Tank Level Indicators (SR 4.1.1.8)

A Calibration on the level indicators and transmitter for the Fire Water Storage Tank (Level transmitter, 456-LT-006-001, CMR indicator, AK0601 and Local indicator, 456-LI-006-001) shall be performed Annually. The Calibration will include the level transmitter, level indicator in the CMR and local indicator. The Calibration is performed by trained and qualified maintenance personnel. The Frequency of Annually meets the Calibration Frequency assumed in the associated instrument uncertainty analysis.

Calibration is defined as a comparison of measuring and test equipment against a standard instrument of higher accuracy to detect, correlate, adjust, rectify and document the accuracy of the instrument being compared. Calibration of an instrument is checked at several points throughout the calibration range of the instrument. If “as found” values are within tolerance, then this information is recorded on the Calibration Loop Data Sheets. If the “as found” loop values are not acceptable, the instrument is adjusted back into acceptable tolerances. The “as found” and “as left” calibration values are recorded on the Loop Data Sheets.

Pump Output (SR 4.1.1.9)

To provide the necessary amount of fire water to the sprinkler systems, each of the two fire pumps must be capable of supplying greater than or equal to 490 gpm to the Room 108 riser at greater than or equal to 120 psig. Because it is not practical to directly measure the flow and pressure at the riser, a hydrant flow test as described here is used to verify the capability to deliver 490 gpm to the Room 108 riser at greater than or equal to 120 psig. The required pressure and flowrate at the Room 108 riser is proven by demonstrating a flow of greater than or equal to 500 gpm at a residual pressure of 141 psig at hydrants #12 and #13 (ETO-Z-230, Rev. 2). Hydrant tests are used to determine the hydraulic capacity of the water supply system and to determine system Operability as described in NFPA 291. As part of ETO-Z-229, Rev. 1, two points were calculated to determine the necessary water flow and pressure that would prove enough water flow and pressure were available at the sprinkler riser in Room 108. These points are directly below two fire hydrants outside of the WHB. This calculation involves determining the required flow and pressure at these two hydrants (#12 and #13) that proves the system can provide greater than or equal to 490 gpm to the Room 108 riser at greater than or equal to 120 psig. This capability is proven by demonstrating a flow of greater than or equal to 500 gpm at a residual pressure of 141 psig at hydrants #12 and #13 (ETO-Z-230, Rev. 2). Hydrant tests are completed by attaching a flow meter on one hydrant

and a pressure gauge on another hydrant up stream. Water is flowed from the downstream hydrant and is measured. The residual pressure (pressure of the system when water is flowing) is taken from the pressure gauge on the upstream hydrant.

This flow test is used to verify that the flowrate and pressure at the riser in Room 108 is greater than or equal to 490 gpm at 120 psig determined by ETO-Z-230, Rev. 2. This SR verifies on an Annual basis that each of the two fire pumps can perform this function. The Annual Frequency meets the NFPA 25 requirements.

Visual Internal Inspection of CH Bay and Room 108 Risers (SR 4.1.1.10)

Perform an internal visual inspection of the CH Bay and Room 108 risers. This surveillance performs a visual inspection every 5 Years of the internals (e.g., alarm valves, check valves, strainers, filters, orifices, and representative sample(s) of FSS piping) of the CH Bay and Room 108 risers. Visual inspections shall be performed and evaluated with approved vendor or site procedures that meet NFPA criteria. This SR verifies components operate correctly, move freely, are in good condition, and fire suppression piping is free of excessive foreign material and unobstructed. A 5 Year Frequency has been determined to be adequate based on NFPA criteria.

5.5.2 Underground Vehicle/Equipment Fire Suppression Systems (LCO 3.1.2)

Control Description: The automatic FSSs on UG vehicles/equipment required by the hazard evaluation completed per NFPA 122 and selected for use in the Waste Shaft Station when CH Waste is present, in the VEZ, when transporting CH Waste between the VEZ and the Waste Face, and operated less than or equal to 200 feet of the CH Waste Face shall be Operable.

The safety function of the UG Vehicle/Equipment FSS is to automatically detect and suppress developing stage fires associated with the engine compartment, and/or fuel and hydraulic line leaks, thereby reducing the likelihood of pool fires involving CH Waste.

This control applies to all vehicles/equipment with an automatic FSS required by the hazard evaluation completed per NFPA 122 that will be operated in one or more of the following areas: (1) the Waste Shaft Station when CH Waste is present; (2) when transporting CH Waste to or in the VEZ; (3) when transporting CH Waste between the VEZ and the CH Waste Face; and (4) within 200 feet of the CH Waste Face.

An Operable FSS detects and suppresses a vehicle/equipment fire resulting from engine compartment fires, and/or ignition of liquid fuel and hydraulic fluid.

The UG vehicle/equipment FSS is credited with reducing the likelihood of a fire involving the vehicle/equipment or combustible liquids that could impact the CH Waste Containers and result in a radioactive material release. The UG vehicles/equipment with a significant combustible liquid capacity that require an automatic FSS were determined by the hazard evaluation completed per the NFPA 122 requirements. WIPP-058, Revision 2, *DSA Supporting Calculations, Fuel Spill, HEPA Filter Plugging, and Compartment Over Pressurization,* identifies the fuel limits for the vehicles that require a FSS based on the NFPA 122 hazards analysis. The UG vehicle/equipment FSS is credited with reducing the likelihood of a fire involving the vehicle/equipment or combustible liquids that could impact the CH Waste Containers and result in a radioactive material release. This applies to vehicles with significant combustible liquid capacities that are within 200 feet of CH Waste. WIPP-058 concludes that a fuel spill in a 16-foot drift extends approximately 108 feet each side of the spill. Additionally, a standoff distance

of approximately 8 feet from the edge of the pool is sufficient to maintain the radiant heat flux to less than 15.9 kW/m^2 on the CH Waste Containers. To ensure the total standoff distance calculated in WIPP-058 is protected, the distance for the safety analysis is conservatively established as 200 feet for UG vehicles/ equipment that has a FSS required by the NFPA 122 analysis. Other controls work in conjunction with this control to ensure that any vehicles within the 200-foot zone do not present a severe fire risk to the CH Waste. Therefore, any vehicle/equipment with combustible liquids with an automatic FSS required by the NFPA 122 analysis that can be within 200-feet of the CH Waste Face, in the VEZ, when transporting CH Waste between the VEZ and the CH Waste Face, or the Waste Shaft Station must have an Operable Fire Suppression System.

The FSS on the UG vehicles/equipment are specifically designed for each vehicle/equipment based on the fire hazards associated with the particular vehicle. The UG vehicle/equipment FSSs are installed by a qualified service technician or manufacturer's representative. The installer certifies that the installation has been made in accordance with the approved plans and the manufacturer's design, installation, and maintenance manual. UG vehicles/equipment FSSs meet the requirements of NFPA 17, *Standard for Dry Chemical Extinguishing Systems*, Chapter 9, Pre-Engineered Systems, specifically Section 9.9. NFPA 17 defines a "Pre-Engineered System," as those systems having predetermined flow rates, nozzle pressures, and quantities of extinguishing agent and having specific pipe size, maximum and minimum pipe lengths, flexible-hose specifications, number of fittings, and number and types of nozzles." NFPA 17 Section 9.1.2 requires, "Fire-extinguishing systems referenced in 9.1.1 shall comply with American National Standards Institute (ANSI) / Underwriters Laboratory (UL) 1254, *Pre-Engineered Dry Chemical Extinguishing System Units*, or equivalent listing standard." The UG vehicle/equipment FSSs are fully Factory Mutual and/or UL approved and comply with the requirements for pre-engineered FSSs. The systems are installed and tested per NFPA 17, Section 10, to demonstrate the system has been properly installed and will function as intended. The FSS on the vehicle/equipment is designed and installed specifically for that vehicle/equipment based on a detailed fire hazards analysis of the vehicle, and provides suppression for all potential fire locations per the NFPA requirements.

The UG vehicle/equipment FSS is composed of the following components. There is a heat sensor system (fire detection) that is routed within significant fire hazard areas. The Control Panel interprets the heat detection cable output signals, initiates discharge of the system, initiates vehicle engine cutoff once the FSS is actuated, and performs diagnostic tests of the system to confirm the system is Operable. The status indicating lights indicate if the system is Operable (credited green light) or inoperable (non-credited red light). There is a distribution system, essentially composed of piping or tubing that carries the extinguishing agent to nozzles located at each hazard area. The extinguishing agent is a dry chemical Type ABC fire suppressant powder. It is stored in a container and is dispersed through the system via a pressurized gas.

There are two systems that may be used, the Ansul and the Amerex Systems. If the Ansul System is used, there are two separate cylinders. One cylinder holds the dry powder extinguishing agent. The other cylinder holds the gas (nitrogen) that is used to propel the extinguishing powder through the system. The Control Panel on the Ansul System does not have a push to test button to allow verification the system is Operable. If the Ansul System is connected to a battery, the Control Panel is monitoring the system for the appropriate inputs to determine if the system is Operable. If the Ansul FSS is Operable, the credited green status light is illuminated. A red (non-credited) LED, if illuminated, indicates the FSS is inoperable.

The Amerex System uses a pressurized cylinder that holds the chemicals in two separate chambers. One chamber contains the credited dry chemical agent (Type ABC). The other chamber, which is provided only for turbocharged vehicles and vehicles rated with greater than 150 horsepower, contains a liquid cooling agent designated by the manufacturer as a liquid based integrated cooling material (ICE). The

cooling agent acts as a quenching compound that cools heated elements of the equipment. The ICE is a supplemental system that is not required by the safety analysis but is installed on some vehicles. The ICE system is not required by NFPA 17 but is an option that was added for high value vehicles. The ICE is not credited with extinguishing a fire because the Amerex System dry powder extinguishing agent, which is about two times the amount of dry powder suppressant in the Ansul System, will extinguish the developing stage fire. Therefore, although the ICE is an element of the FSS, it is not required by the appropriate national standards, it is not needed to extinguish the developing stage fire, and it is not credited as part of the Operable FSS. The Ansul System, which has less dry powder extinguishing agent, is an acceptable system to extinguish a developing stage fire on the vehicles on which it is installed. The Amerex System, with about two times as much dry powder as an extinguishing agent as the Ansul System and is designed specifically for the vehicle on which it is installed, and is capable of extinguishing a developing stage fire using only the dry powder extinguishing agent. The Amerex System does not rely on the ICE function to extinguish the fire.

For either system, the fire suppressant discharge nozzles are located in the engine compartment and other vehicle fire hazard locations. The number of nozzles and amount of discharge agent are designed to meet the specific fire potential for each vehicle. Discharge piping is located inside frames and enclosures throughout the vehicle where they are less susceptible to damage from impacts and collisions. The Control Panel, sensors, and tanks are located on areas of the vehicle where they are not susceptible to direct damage from impacts.

The control system for the FSS is a proprietary controller supplied by the manufacturer to work as an integral component in the FSS. The controller is fully enclosed and has no programming functions available to the end user with the exception of some temperature set point and time delay adjustments set by a certified installer. All connections to the controller are made via factory wired harnesses for a plug and play installation. The controller is inside the Control Panel. The Control Panel is Functionally Tested or verified to be Operable each time the vehicle/equipment with a FSS is used. The description below for the status light verification is the same verification that the Control Panel is Operable.

On the Amerex System Control Panel there is a “push to test” button that is pushed to verify Operability of the system during the pre-operational test. There are also two lights (LEDs). One is red (non-credited) to indicate a system trouble or fault condition. The other is a green (credited) “system OK” LED that if illuminated shows that the system is fully operational per the diagnostics run by pushing the push to test button. There is also an audible alarm. Only the green LED, credited to indicate the system is Operable, should be illuminated during operation. If there is a fault or failure somewhere in the system, the audible alarm will sound and the service system (red non-credited) light will illuminate and the green light will go out. Note that the audible alarm and the red light are not credited in the analysis and are included here to show a complete description. If the Control Panel is not working, neither the green or red status lights will illuminate. If the green status light illuminates, the Control Panel is operable. The inputs and outputs from the Control Panel are verified during the Semiannual Functional Test.

On the Ansul System Control Panel there are two LEDs, one green (credited) to indicate that the system is operating correctly and the other a red (non-credited) LED (trouble light) that illuminates if there is a fault or failure of some component of the FSS. The green power light is always illuminated or flashing unless the battery is dead. There is no push to test button on the Ansul System. When the FSS is initially hooked to the battery, the system runs a diagnostic test and if there are no problems, the credited green LED illuminates. If there are problems, the red LED lights up. During operation, if a fault occurs, the red (non-credited) LED illuminates. There is no audible alarm with the Ansul system. If the Control Panel is not working, neither the green (credited) nor the red (non-credited) status light will illuminate. If either of the

status lights is illuminated, the Control Panel is Operable. The inputs and outputs from the Control Panel are verified during the Semiannual Functional Test.

Sensors are located in expected fire locations on the vehicle as determined by a detailed hazard analysis performed by certified qualified system designers and installers to provide the necessary monitoring and suppression in areas of the engine compartment and other areas vulnerable to fire. The sensors installed on WIPP UG equipment are the linear detection cable, which are routed within the hazard area. The sensors respond to fire temperatures (typically at 450°F but may respond at lower temperatures of 325°F or greater depending upon the rating of the sensor), and send a signal to the Control Panel. The linear heat detectors used on the UG FSS vehicle are set at the manufacturer. They are composed of two metal components separated by an insulating material. The material that separates the metal pieces melts when the temperature reaches the design temperature. This allows the metal strips to contact each other and send a signal to the Control Panel to initiate the FSS. The linear detection system cannot be tested or calibrated as the only method to do this would be to heat the sensor up until it activates. As the insulating material between the metal pieces would be destroyed the linear detector would have to be replaced with a new detector. The linear detector is a passive system that does not require testing or maintenance. The specific sensor selected is based on the normal ambient conditions of the space and the type of fire expected. The Control Panel interprets this signal to initiate discharge activation by proprietary logic that is not accessible to or changeable by the end user. The discharge activation is initiated by the heat sensor signal with a signal to the Control Panel, which then activates the discharge mechanism. When the Control Panel receives a signal to activate the FSS, a countdown timer is activated. This timer has a 5-second delay between the receipt of the initial signal and activation of the suppressant discharge and engine cutoff output signals. This 5-second delay is to prevent spurious activation of the system, but does not interfere with or prevent system activation to extinguish a fire. The suppressant discharge can be initiated at any time either by the distributed sensors or by the non-credited manual activation. Only the automatic FSS detection and activation is credited in the safety analysis. Relay timers shut down the engine when the controller initiates a discharge. A suppression system green status light indicates the system monitoring and actuation functions are Operable.

Upon detection of a fire, the controller automatically shuts down the vehicle engine and initiates the discharge of both the ABC Type dry chemical in the first chamber, and if applicable, the liquid based integrated cooling agent (Amerex System only). Additionally, the system can be manually actuated by the operator either from the vehicle cab or ground level. The manual activation is a non-credited system. For the Ansul System, the controller activates an electrically fired squib that penetrates the disc on the gas cylinder allowing the gas to flow to the cylinder containing the powder. From there, a rupture disc on the powder cylinder bursts allowing the pressurized powder to flow through the distribution system. On the Amerex System, the controller actuates a valve that opens and allows the pressurized extinguishing agent and integrated cooling, if applicable, to flow through the distribution system.

In accordance with NFPA 17 requirements and the manufacturer’s recommendations, normal and periodic maintenance (e.g., weekly, monthly, quarterly, semiannually, annually, or less frequent) is performed by a qualified manufacturer approved service technician. The technician completes the maintenance and functional tests per the FSS manufacturer’s recommendations and instructions and the appropriate WIPP procedures. The technician must be certified and qualified on the system by the system manufacturer. The WIPP Fire Protection Program (FPP) ensures the completion of all required inspections, maintenance, and tests at the intervals required by the NFPA or manufacturer’s requirements to ensure the reliability of the FSS is maintained. WIPP personnel verify completion of the semiannual maintenance.

Additional system description information is provided in Section 4.4.2.2 (in Chapter 4.0 of this DSA) and the manufacturer’s manuals.

The FSS is required to be Operable on all vehicles/equipment with a significant combustible liquid capacity in the Waste Shaft Station when CH Waste is present, when transporting CH Waste to or in the VEZ or when transporting CH Waste between the VEZ and the CH Waste Face, and to any other vehicle/ equipment that can come within 200 feet of the CH Waste Face.

5.5.2.1 Limiting Condition for Operation

To ensure the automatic FSSs on UG vehicles/equipment required by the hazard evaluation completed per NFPA 122 that are selected for use in the Waste Shaft Station when CH Waste is present, in the VEZ, when transporting CH Waste between the VEZ and the Waste Face, and any other vehicles/equipment to be operated less than or equal to 200 feet of the CH Waste Face, the FSS must have the following attributes:

- The FSS shall survive a low speed collision.
- The FSS shall automatically detect developing stage fires associated with the engine compartment and/or fuel and hydraulic line leaks.
- Upon detection of a developing fire, the FSS shall automatically discharge a fire suppressant into the engine compartment and/or designated heat source locations to extinguish the fire.
- Upon actuation of the extinguishing systems, the FSS shall automatically send a signal to shut down the vehicle engine.

The requirement to survive a low speed impact is evaluated in Chapter 4.0 and is not carried forward as it depends upon the ability of the vehicle to withstand a low speed impact. Operability is confirmed by the requirements identified in the LCO statement below. The description of how the FSS meets the other attributes is given in the description of the system above.

LCO 3.1.2 protects the Operability of the automatic FSS on UG Vehicles and/or Equipment required by the hazard evaluation completed per NFPA 122 that are within 200 feet of the CH Waste Face, in the Waste Shaft Station when CH Waste is present, and when transporting CH Waste to or in the VEZ, and between the VEZ and the CH Waste Face. An Operable FSS consists of the following elements:

- Control Panel with functional status indicating light(s).
- Temperature detection elements.
- Adequately charged suppressant system.
- Distribution system to disperse the suppressant.
- Automatic engine cutoff function.

The Control Panel continuously monitors the FSS parameters. The Control Panel does not have any set points for temperature or rate of rise or any other set points or settings that the operator can change. The heat detectors have the temperature and rate of rise limits. The heat detector limits are preset at the manufacturer. The Control Panel receives the signals from the heat sensors and upon receipt of a signal as an indication of a fire, the Control Panel initiates the discharge of the suppressant. If both of the status lights (only green light is credited) are not illuminated during the pre-operational check (completed prior to use of the selected vehicle) of the Amerex System, it indicates that either the Control Panel or some other system component is inoperable. The Control Panel is tested for appropriate inputs and outputs during the Semiannual Functional Test.

The red trouble and green LEDs (status lights) indicate the status of the system. After the pre-operational test of the Amerex System, the credited green LED, if illuminated or flashing, indicates that all the components of the system have passed the diagnostic tests and the system is Operable. If the green LED is illuminated (or flashing) on the Ansul System, the FSS is Operable. If the red LED on either system illuminates at any time, the system has a fault that renders it inoperable. Only the green status lights on both systems are credited to show that the system is Operable.

The temperature detection elements are provided at different locations on the vehicle/equipment to measure the rate of rise of the temperature. When the sensor detects the temperature has reached a preset limit, it sends a signal to the Control Panel of a potential fire based on the heat rise.

A pressurized suppressant system (see details above) ensures that there is sufficient dry powder extinguishing agent and a motive force to move the extinguishing agent through the suppressant distribution to the fire location(s). The suppressant distribution system, which is capable of withstanding the system pressure, provides a flow path for the suppressant to the desired locations(s) and nozzles to discharge the suppressant in a controlled fashion.

Both systems have a pressure gauge on the gas cylinder or the pressurized agent cylinder. These pressure gauges are only used for local indication of the status of the pressure (e.g., is the pressure in the operating range) and allow the operator to quickly check if the system pressure is within the normal operating range. The pressure gauges are not connected to the inputs to the Control Panel. The calibration of the gauges is performed and verified in accordance with the manufacturer's guidelines.

For the Amerex system, a pressure switch, provided and set by the manufacturer at delivery, continuously communicates with the Control Panel and provides a signal when the pressure in the suppressant chamber is not in acceptable range. An unacceptable pressure is noted by a light on the Control Panel. The pressure switch is an integral component of the dry suppressant chamber confinement and pressure boundary. Per the manufacturer recommendations, the dry suppressant powder is required to be replaced at 6-year intervals. The entire suppressant chamber to include the pressure switch is replaced. The manufacturer indicated that the switch does not require a periodic calibration as it is designed to be reliable until the suppressant is discharged or replaced. Replacement of the switch as a component cannot be completed without opening the pressurized chamber, which will result in replacing the dry suppressant chamber.

The automatic engine cutoff function is a signal initiated by the FSS Control Panel to shut down the vehicle/equipment engine. This may shut down the engine directly or shut down the electric fuel pump thereby shutting the engine off. The Ansul FSSs may not have the system cutoff capability and will have to be backfit to include this capability. Until this capability is added to the Ansul FSS, any vehicle with an Ansul FSS required by the NFPA 122 evaluation cannot be used in the Waste Shaft Station when CH Waste is present, when transporting CH Waste to or in the VEZ or when transporting CH Waste between the VEZ and the CH Waste Face, or within 200 feet of the CH Waste Face.

5.5.2.2 Surveillance Requirements for Underground Vehicle/Equipment Fire Suppression Systems

The significant elements of this LCO are Operability of the FSS when selected for use, and performance of a test of the vehicle/equipment FSS to ensure Operability. To ensure this control is maintained, surveillances shall be completed on the FSS of the UG vehicle/equipment with an FSS required by the hazard analysis completed per NFPA 122.

Verification the UG Vehicle/Equipment FSS is Operable (SR 4.1.2.1)

Prior to using a vehicle/equipment to handle Waste or be in the proximity to Waste, verification is made that the FSS is Operable on the vehicle/equipment that has a FSS required by the NFPA 122 hazards analysis and listed in ETO-Z-157. This surveillance, which is performed prior to use of the vehicle, ensures that there is no indication that the automatic detection and/or actuation portions of the FSS are impaired and the system will function as expected in the event of a fire. The verification is confirmed by the Control Panel green status light. The Control Panel contains a diagnostic loop that verifies that the dry chemical suppressant has not been discharged and that all the components monitored by the Control Panel, including that the system pressure is within specified tolerance, and are Operable. To show Operability of the Amerex System, the WIPP Operators push a “Push to Test” button on the Control Panel. When the Push to Test button is pressed, the credited green system OK and the non-credited red trouble LEDs will illuminate and an audible alarm will sound. If the system is Operable upon completion of the test, the Control Panel credited green “System OK” LED will illuminate indicating the system is Operable. For the Ansul System, which does not have a Push to Test button, the Operator monitors the system status lights and verifies that the credited green LED is illuminated (or flashing) that indicates the system is Operable. Note that the green status light is the only light that is credited to verify system Operability on both FSSs. This complies with the manufacturer’s recommendations and verifies that the FSS, to include the credited green status light and Control Panel, on the selected vehicle is in an Operable status. The manufacturer guidance in the operating manual is that this verification be performed daily. However, the frequency of verification has been amended to be performed prior to using the vehicle for the first time on the shift in which it is selected for use. The TSR definition of Prior to Use is “prior to the initial use of equipment/system each shift or the RH Waste Handling evolution. If the equipment selected for use is used several times throughout a shift or an RH evolution that requires multiple shifts to complete, the initial application of the surveillance is adequate for the balance of the shift or the RH evolution.” Note that the RH Waste handling activities included in the TSR definition does not apply to this control as this control only applies to CH Waste activities. Therefore, the surveillance (verification) is only applied the first time the vehicle is used during the evolution. The verification of Prior to Use demonstrates that the FSS is Operable on the vehicle selected for use and the verification of Prior to Use is sufficient to ensure the FSS is Operable. Although not credited in the analysis, it is noted that the green and red lights on the Control Panel are located in such a position that the operator can readily see them during vehicle/equipment operations.

Test the Operation of the FSS Control (SR 4.1.2.2)

A test and inspection of the vehicle/equipment FSS to ensure the system is Operable shall be completed by a qualified and certified technician Semiannually. The system test typically will coincide with the Semiannual maintenance completed by the technician. The FSS is maintained in compliance with NFPA 17, Section 11.3 and the system manufacturer’s recommendations. The system is tested and inspected by a technician certified and qualified by the system manufacturer. The maintenance and the tests meet the minimum requirements of NFPA 17 and the suppression system manufacturer. As a minimum, the Semiannual test verifies the following components are Operable: Control Panel with functioning green status indicating light, temperature detection elements; an adequately charged suppressant system; a distribution system for dispersing the suppressant; and the automatic engine cutoff system. The Control Panel is functionally tested by inputting a signal into the controller that simulates the action of the inputs and outputs of the Control Panel. The Functional Test verifies the Control Panel is Operable by inputting various trip (e.g., high temperature and low pressure) and system status signals into the controller and obtaining the correct system response for the various system components as required by the system manufacturer. The Functional Test verifies the status lights are working correctly, the heat detection device will accurately detect a heat source based on the specific heat detection temperature for

each vehicle/equipment, and upon detection sends a signal to the Control Panel to actuate the suppressant that the discharge system is capable of distributing (e.g., is in proper pressure range and no line blockage) the suppressant and a simulated signal is sent to automatically shut down the vehicle/equipment engine. Additionally, an inspection is completed to verify there is no evidence of caking of the Ansul System dry powder suppressant in the cylinder. The Semiannual Frequency is in accordance with the requirements of NFPA 17, and the manufacturer's recommendations, and is sufficient to demonstrate Operability of the system.

5.5.3 Contact-Handled Waste Handling Confinement Ventilation System (LCO 3.2.1)

Control Description: The CH WH CVS shall be Operable.

The safety function of the CH WH CVS is to mitigate the consequences of radiological material releases from non-NPH fire events to acceptable levels by filtering air from the CH Bay, Room 108, and the CLR when Door 140 is open, prior to its release to the environment.

An unfiltered release of radiological material as a result of pool fires, ordinary combustible material fires, vehicle collision with non-pool fire, internal CH Waste Container fires in the CH Bay or Room 108, or a fire in the Conveyance Loading Room (CLR) could affect co-located workers outside the WHB.

The CH WH CVS is a SS SSC that consists of supply fans, dampers, exhaust fans, high-efficiency particulate air (HEPA) filter units, control systems, and instrumentation supporting system indications. The exhaust portion of the system is credited to support the safety function. For the exhaust capability, two CH WH CVS HEPA Filter Trains provide the air filtration function for exhaust air from the CH Bay, Room 108, and the CLR when Door 140 is open. Each CH WH CVS HEPA Filter Train includes the air-handling unit supply fan, HEPA filter unit, and an exhaust fan. Each HEPA filter unit consists of one moderate efficiency filter bank and two in series HEPA filter banks. The exhaust system is comprised of two exhaust fans and two HEPA filter units. The HEPA filter units are each sized to support the airflow rate from one exhaust fan. The filter units are designated 41-B-814 and 41-B-815 and the exhaust fans are designated 41-B-816 and 41-B-817. Operability of the CH WH CVS requires that sufficient differential pressure in the process area and exhaust airflow is maintained through CH WH CVS HEPA filtration units. Measurement of positive differential pressure across each HEPA filter bank of each In Service HEPA filtration unit provides an indication that the CH WH CVS is In Service. The required instrumentation for this system is listed in Table 5.5-1 for the associated CMR indications. Table 5.5-2 provides the differential pressure local gauges, with the noted surveillance acceptable range.

Table 5.5-1. CH WH CVS, CMR Differential Pressure Instrumentation

Description	Loop	Transmitter	Applicable Alarm Set Points
41-B-814, 1st HEPA Bank	41F05223	411-PDT-052-023	≤ + 3.93 inches w.g. (High) ≥ + 0.27 inches w.g. (Low)
41-B-814, 2nd HEPA Bank	41F05224	411-PDT-052-024	≤ + 3.93 inches w.g. (High) ≥ + 0.27 inches w.g. (Low)
41-B-815, 1st HEPA Bank	41F05230	411-PDT-052-030	≤ + 3.93 inches w.g. (High) ≥ + 0.27 inches w.g. (Low)
41-B-815, 2nd HEPA Bank	41F05231	411-PDT-052-031	≤ + 3.93 inches w.g. (High) ≥ + 0.27 inches w.g. (Low)
CH BAY	41F05926B	411-PDT-059-026B	≤ -0.02 inches w.g.
ROOM 108	41F05926E	411-PDT-059-026E	≤ -0.04 inches w.g.

Table 5.5-2. CH WH CVS, Local Differential Pressure Instrumentation

Description	Local Gauge	Surveillance Acceptable Range
41-B-814, 1st HEPA Bank	411-PDI-052-023B	≤ +3.90 inches w.g. (High) ≥ +0.30 inches w.g. (Low)
41-B-814, 2nd HEPA Bank	411-PDI-052-024B	≤ +3.90 inches w.g. (High) ≥ +0.30 inches w.g. (Low)
41-B-815, 1st HEPA Bank	411-PDI-052-030B	≤ +3.90 inches w.g. (High) ≥ +0.30 inches w.g. (Low)
41-B-815, 2nd HEPA Bank	411-PDI-052-031B	≤ +3.90 inches w.g. (High) ≥ +0.30 inches w.g. (Low)
CH BAY	411-PDI-059-026BB	≤ -0.04 inches w.g.
ROOM 108	411-PDI-059-026EB	≤ -0.04 inches w.g.

The system is normally aligned to run as two trains in a lead/lag control scheme with auto changeover on a loss of flow in the lead exhaust unit. Normally, exhaust fan 41-B-816 is aligned to draw through filter 41-B-814 as one exhaust train and exhaust fan 41-B-817 is aligned to draw through filter 41-B-815 as the second exhaust train. The cross-connection isolation damper is normally closed. Either exhaust fan can be aligned to draw from either HEPA filter unit.

Both CH exhaust fans discharge to a common header.

Differential pressure transmitters and alarms are provided to ensure that negative differential pressures are maintained within the CH Bay and Room 108 with respect to outside ambient air pressure. When Door 140 is open, the CLR becomes an area that is included in the CH Bay Operability requirements. The differential pressure with respect to outside ambient air pressure is measured by a differential pressure transmitter located in the CH Bay and another differential pressure transmitter located in Room 108. The differential pressure transmitter at each location provides a signal to the Central Monitoring System (CMS), located in the CMR via the instrument loops as identified in Table 5.5-1. Within the CMR, the differential pressure values at each monitored location can be displayed on one or more CMR monitors. An audible alarm is sounded in the CMR if the differential pressure indication is outside the acceptable range. Additionally, the CMR monitor(s) display the source of the alarm via screen background changes for the affected differential pressure transmitter(s) location(s).

Likewise, differential pressure transmitters are used to indicate the differential pressures across each HEPA filter bank of the In Service HEPA filter units to ensure that exhaust air is being drawn through the HEPA filter units prior to release to the environment. The differential pressure across each HEPA filter bank of each HEPA filter unit is read by a differential pressure transmitter for each HEPA filter bank. The differential pressure transmitter for each HEPA filter bank provides a signal to the CMS via an instrument loop that provides a signal to the CMR where the differential pressure for each HEPA filter bank is displayed on one or more CMR monitors and audibly alarmed if outside the acceptable range.

To support the backfit analysis results for the CMS and associated instrumentation vulnerabilities, the requirement for local gauges was implemented in the system design. These gauges are used to assist in addressing the vulnerabilities in the CMS with respect to satisfying the SS classification of the equipment. The local gauges are configured independent of the associated pressure differential transmitter. The gauges are directly connected to the manifold and read the actual pressure values of the system. The

safety analysis values that are to be protected in the safety basis are adjusted to support the specific instrument loop uncertainties. Therefore, the actual Operability values used in the LCO may be different for readings in two different locations but are established from the same safety analysis value.

Additional CH WH CVS description information is contained in Chapter 4.0, Section 4.4.4.6, and Chapter 2.0, Section 2.7.3, of this DSA and the design parameters for the CH WH CVS are described in SDD VU00, *Underground Ventilation System Design Description*).

The CH WH CVS is required to be Operable when CH Waste is in the CH Bay or Room 108 and is susceptible to fire events in the Waste Handling and Waste Storage Modes. The applicable Process Areas for the CH WH CVS are the CH Bay, Room 108, and the CLR when WHB Door 140 is open.

5.5.3.1 Limiting Condition for Operation

An Operable CH WH CVS protects co-located workers outside the WHB from the consequences of a release of radiological particulate material. An Operable CH WH CVS requires:

- One exhaust fan (41-B-816 or 41-B-817) In Service.

  The lowest functional capability for an Operable CH WH CVS is met by an In Service CH exhaust fan maintaining a negative pressure with respect to the environment and drawing CH Bay and Room 108 atmosphere through an Operable HEPA filter before discharging to the environment. The system is normally aligned for operation with exhaust fan 41-B-816 drawing through filter 41-B-814 and exhaust fan 41-B-817 aligned for operation through filter 41-B-815. However, specific alignment of fan and filter is not essential to accomplish the safety function.

- One Operable HEPA filter unit (41-B-814 or 41-B-815) In Service.

  Each HEPA filter unit is sized to support the air flow rate from one exhaust fan. Each HEPA filter unit consists of one moderate efficiency filter bank and two, in series, HEPA filter banks. The HEPA filter units (41-B-814 or 41-B-815) are considered Operable when the differential pressure across each In Service HEPA filter unit is verified by local gauge readings of less than +3.90 inches w.g. and greater than or equal to +0.30 inches w.g, and that each HEPA filter unit has been tested Annually to ensure it is greater than or equal to 99 percent efficient.

- Differential pressure across each In Service HEPA filter bank less than or equal to +3.90 inches w.g. and greater than or equal to +0.30 inches w.g. locally.

  Differential pressure across each HEPA filter bank of each In Service HEPA filter unit is measured at the pressure differential local gauges to ensure it is maintained in the range of less than +3.90 inches w.g. and greater than or equal to +0.30 inches w.g. The maximum differential pressure allowed ensures that the HEPA filter banks are functioning properly and that the HEPA filter unit banks are not clogged or damaged. Likewise, the minimum differential pressure allowed ensures that the HEPA filter banks are not being bypassed. The values listed here include the instrument uncertainty values for the local gauges when applied to the desired safety analysis value.

- In Service HEPA filter unit efficiency of greater than or equal to 99 percent.

  Each HEPA filter bank of each HEPA filter unit is tested Annually to ensure it provides filtration efficiency of greater than or equal to 99 percent. This filtration efficiency significantly reduces the amount of radioactive particulate that could be released to the environment in the event of an accident. A HEPA unit consists of two banks and each bank must possess an acceptable efficiency of greater than or equal to 99 percent for the unit to be considered Operable.

- Differential pressure less than or equal to -0.04 inches w.g. in the CH Bay with respect to ambient outside air pressure, locally.

  Operability of the CH WH CVS requires that the ventilation system exhaust fans and HEPA filter complements are providing sufficient air draw from the CH Bay where a radioactive release could occur to ensure that this air is filtered prior to release to the environment. The specified values are based on a safety analysis differential pressure of being less than outside ambient air pressure (i.e.,-0.01 inches w.g.), such that clean air is always drawn inward to areas of potential contamination for filtration, and the adjustment to support the instrument uncertainty value for the local gauge.

- Differential pressure less than or equal to -0.04 inches w.g. in Room 108, with respect to ambient outside air pressure, locally.

  Operability of the CH WH CVS requires that a ventilation system exhaust fans and HEPA filter complement are providing sufficient air draw from Room 108 where a radioactive release could occur to ensure that this air is filtered prior to release to the environment. The specified value is based on a safety analysis differential pressure value of being less than outside ambient air pressure (i.e., -0.01 inches w.g.) such that clean air is always drawn inward to areas of potential contamination for filtration and the adjustment to support the instrument uncertainty value for the local gauge.

- Operable differential pressure instrumentation and CMR alarm indications as identified in Table 5.5-1 and Table 5.5-2.

  CH WH CVS Operability also requires that the differential pressure transmitters and instrument loops, with associated alarms, and local gauges that provide indication of differential pressure across the HEPA filters and in the applicable process areas are Operable to provide accurate and timely indication of conditions affecting safety. Continued Operability of the instrumentation and instrument loops is ensured by specified instrumentation Calibration and Functional Tests.

5.5.3.2 Surveillance Requirements for the Contact-Handled Waste Handling Confinement Ventilation System

An Operable CH WH CVS protects co-located workers outside the WHB from the consequences of a release of radioactive particulate material. To ensure that the CH WH CVS can perform its safety function of providing adequate pressures, filtration, and alarm capabilities, surveillances of these features are required. This section details the SRs of these attributes of an Operable system.

HEPA Filter Differential Pressure (SR 4.2.1.1)

Verification of differential pressure across each In Service HEPA filter bank of each HEPA filter unit is performed Daily by visual observation of the HEPA filter bank pressure differential local gauges as specified in Table 5.5-2, “CH WH CVS, Local Differential Pressure Instrumentation.”

The maximum differential pressure allowed for the HEPA filter banks verifies that the HEPA filter banks are functioning properly to support assumed pre-accident filter capability and that the HEPA filter banks are not clogged or damaged. Establishing a maximum differential pressure limit also prevents filter blowout that could release unfiltered air into the exhaust stream. This value is based on a safety analysis differential pressure value of less than or equal to +4.0 inches w.g. and applying an instrument uncertainty (CALC 16-007, *Room and HEPA Instrument Uncertainty*), which gives a value of +3.90 inches w.g. The allowed differential pressure maximum value of +4.0 inches w.g. is based upon the *DOE Nuclear Air*

Cleaning Handbook (DOE-HDBK-1169-2003), which recommends that HEPA filters "should be changed if the differential pressure [adjusted for rated flow] exceeds 4.0 in. w.g."

Likewise, the minimum differential pressure allowed for the HEPA filter banks verifies that the HEPA filter banks are not being bypassed. This value is based on a desired differential pressure of greater than +0.20 inches w.g. and applying calculated instrument loop uncertainty (CALC 16-007), which gives a value of +0.30 inches w.g.

Surveillance of the differential pressure across each HEPA filter bank of each In Service HEPA filter unit Daily by visual observation of the HEPA filter banks differential pressure local gauges is adequate based upon prior HEPA filter loading indications, trending, and prior operational experience with known conditions that could cause excessive HEPA filter loading or possible HEPA filter bypass. The verification Daily of the differential pressure across the In Service HEPA filter banks of each In Service HEPA filter unit is adequate to demonstrate HEPA filter Operability based upon operational experience.

Differential Pressure in CH Bay and Room 108 (SR 4.2.1.2)

Verification of differential pressure in the CH Bay and Room 108 with respect to outside atmospheric air pressure is performed Daily by visual observation of the CH Bay and Room 108 Process Areas differential pressure local gauges as specified in Table 5.5-2, "CH WH CVS, Local Differential Pressure Instrumentation."

CH WH CVS Operability requires that a differential pressure is maintained of less than or equal to -0.04 inches w.g. in the CH Bay and Room 108 with respect to outside ambient air pressure as indicated on differential pressure local gauges. This value is based on a safety analysis differential pressure value of being less than outside ambient air pressure (i.e., -0.01 inches w.g.) (SDD HV00, *Heating, Ventilation and Air Conditioning System, System Design Description*) and applying an instrument loop uncertainty (CALC 16-007), which gives a value of –0.04 inches w.g. for both the CH Bay and Room 108.

Surveillance of the differential pressure in the CH Bay and Room 108 with respect to outside atmospheric air Daily by visual observation of the CH Bay and Room 108 differential pressure local gauges is adequate based upon continuing operation of the CH WH CVS and prior operational experience with conditions that could adversely affect maintaining adequate differential pressure in the CH Bay and Room 108.

CH WH CVS Exhaust Fan and HEPA Filter Unit In Service (SR 4.2.1.3)

Verification is performed Daily to confirm that that a CH WH CVS exhaust fan and Operable HEPA filter unit are In Service by visual observation of the exhaust fan and HEPA filter unit operational status and alignment as indicated on the CMR monitors. Exhaust fan operational status is indicated and monitored in the CMR. HEPA filter unit alignment is also indicated in the CMR. The Daily surveillance is adequate due to high system reliability based on operational experience. The Daily verification that a CH WH CVS exhaust fan and HEPA filter unit complement are In Service demonstrates the CH WH CVS Operability.

HEPA Filter Efficiency (SR 4.2.1.4)

Performance of an aerosol test of HEPA filter units 41-B-814 and 41-B-815 is required Annually to demonstrate that each HEPA filter unit has an efficiency of greater than or equal to 99 percent.

Each HEPA filter bank of each HEPA filter unit of the CH WH CVS is efficiency-tested Annually and maintained in accordance with ASME N510, *Testing of Nuclear Air Treatment Systems*. The HEPA filter

banks' efficiency is confirmed by an in-place leak test performed in accordance with ASME N510. The in-place leak tests use a poly-dispersed aerosol test (0.3–0.7 micron aerodynamic equivalent diameter) and determines the system efficiency accounting for the system components (i.e., gaskets, frame, housing, etc.) that are typically challenged. The test is performed under actual conditions and at operational airflow in accordance with ASME N510 guidance by qualified/trained individuals. The performance testing allows for the correction and maintenance of the HEPA filter banks in the event the efficiency values are not a minimum of 99 percent. The successful testing of each bank in the unit having an efficiency of greater than or equal to 99 percent is required to determine the HEPA unit is greater than 99 percent efficient.

This SR verifies Annually that each HEPA filter bank of each HEPA filter unit provides filtration efficiency of greater than or equal to 99 percent for the WHB CH Bay and Room 108 air exhausted to the environment. The Annual Frequency is based upon industry standard ASME N510 and operational experience.

Calibrated Instrumentation (SR 4.2.1.5)

Annual Calibration on the instrumentation for each differential pressure transmitter loop of Table 5.5-1 and the local gauges specified in Table 5.5-2 is used to verify Operability of the CH WH CVS. This instrumentation includes the pressure transmitters used for measurement of differential pressure across each of the HEPA filter banks of the In Service HEPA filter units, and pressure transmitters used for measurement of the differential pressure within the CH Bay and Room 108, with respect to outside ambient air pressure, associated alarms and the associated local gauges. The differential pressure instrumentation for the instrument loops identified in Table 5.5-1, "CH WH CVS, CMR Differential Pressure Instrumentation" and local gauges specified in Table 5.5-2 "CH WH CVS, Local Differential Pressure Instrumentation" are subject to calibration.

The loop elements that are Calibrated include applicable pressure differential transmitters and pressure differential indicators as specified on the applicable Calibration procedures. Calibration is performed by trained and qualified maintenance personnel.

Calibration is defined as a comparison of measuring and test equipment against a standard instrument of higher accuracy to detect, correlate, adjust, rectify, and document the accuracy of the instrument being compared. Calibration of an instrument is checked at several points throughout the calibration range of the instrument. If "as found" values are within tolerance, then this information is recorded on the Calibration Loop Data Sheets. If the "as found" loop values are not acceptable, the instrument is set to minimum pressure and zero value adjusted to the prescribed minimum value. The instrument is then set to maximum pressure and the span value adjusted to the prescribed maximum value. The zero and span adjustments are repeated until no further adjustments are necessary. The "as found" and "as left" calibration values are recorded on the Loop Data Sheets. Direct Digital Control (DDC) Calibration includes adjustment of the DDC Calibration offset for amount of needed adjustment and ensuring the indication is within the prescribed tolerance. "As found" and "as left values" are recorded on the Loop Data Sheets. Uncertainty calculations are used to define the necessary instrument minimum and maximum values to account for any instrument tolerances or loop uncertainties.

This SR performs differential pressure transmitter Calibration Annually on differential pressure instrumentation and local gauges used to confirm CH WH CVS Operability. The Annual Frequency is based upon industry recommended standard calibration frequencies for this type of instrumentation.

Functional Instrument Loop Alarm Test (SR 4.2.1.6)

An Annual Functional Test on differential pressure alarm instrument loops of Table 5.5-1 is used to confirm CH WH CVS alarm Operability. A Functional Test is required to confirm that each of the differential pressure transmitters and corresponding instrument loops provide accurate signal output to the CMS and result in an audible CMR alarm for conditions outside the applicable alarm set points and visual indication of the applicable alarm on one or more monitors. The functional instrument loop alarm test is applied to the instrument loops used for indication of differential pressure in the CH Bay and Room 108 with respect to outside atmospheric pressure, and also to the instrument loops that provide indication of differential pressure across the CH WH CVS HEPA filter banks.

The Annual differential pressure instrumentation loop Functional Test consists of injection of a simulated or actual signal into the instrument loop, at the input of the differential pressure transmitter, to verify Operability of the differential pressure instrumentation and audible and visual CMR alarm if outside the acceptable range. This SR verifies Annually that the differential pressure instrument loops provide an alarm signal to the CMR for the CH Bay and Room 108 high differential pressure value and high and low differential pressures across the CH WH CVS HEPA filter banks. The individual signal from each differential pressure transmitter is verified to cause an audible and visual alarm in the CMR. The Annual Frequency is based upon industry recommended instrument loop Functional Test frequencies for this type of instrumentation.

5.5.4 Hot Cell Complex Confinement Ventilation System (LCO 3.2.2) – DELETED

5.5.5 Underground Ventilation Filtration System/Interim Ventilation System (LCO 3.2.3)

Control Description: The UVFS/IVS shall be Operable.

The safety function of the UVS is to mitigate the consequences of radiological material releases from internal container fires or deflagrations/overpressurizations, fires involving ordinary combustible materials, fires associated with fuel leaks near the Waste Face (limited in size due to other preventive controls), and loss of confinement to acceptable levels by (1) filtering UG exhaust air prior to its release to the environment; and (2) providing directional airflow toward the Waste Face and away from workers in an Active Disposal Room.

An unfiltered release of radiological material as a result of small pool fires, combustible material fires, and internal Waste Container fires could affect facility workers and co-located workers.

The UVFS/IVS is used to draw outside air into the UG through three shafts which is then exhausted through a single shaft by UVFS/IVS exhaust fans located on the surface. The air drawn down the Air Intake Shaft, Salt Handling Shaft, and the Waste Shaft is split into three separate air streams serving the construction, north area and TRU Waste disposal areas. The air drawn down the Waste Shaft using various fan arrangements serves the Waste Shaft Station operation and is exhausted directly to the Exhaust Shaft. The combined exhaust streams are drawn up the Exhaust Shaft, and discharged through the UVS/IVS HEPA filtration units. Airflow dampers and regulators provide the capability to adjust the airflow rates in strategic UG locations.

The UVFS/IVS is a SS SSC that consists of dampers, exhaust fans, HEPA filter units, control systems, and associated instrumentation. The UVFS and IVS combined provide the UG filtration function for the UVS.

The UVFS is comprised of three centrifugal exhaust fans, two identical HEPA filter units arranged in parallel, isolation dampers, and associated ductwork. Each HEPA filter unit has one series bank of moderate efficiency prefilters (roughing filters), one series bank high efficiency prefilters, and two series banks of HEPA filters. The HEPA filter units are mounted in parallel between a common inlet plenum and common outlet plenum. The exhaust fans are designated 41-B-860A, 41-B-860B, and 41-B-860C, and the HEPA filter units are designated 41-B-856 and 41-B-857. Any of the UVFS exhaust fans can draw air from both HEPA filter units and only one fan is operated at a time to provide the UG filtration function. Operation of more than one UVFS exhaust fan at a time could damage the HEPA filter units.

The IVS is comprised of two skid mounted centrifugal exhaust fans, and two skid mounded HEPA filter units, isolation dampers, and associated ductwork. The exhaust fans are designated 41-B-960A and 41-B-960B. The filter units are designated 41-B-956 and 41-B-957. Each IVS exhaust fan can draw air from only one HEPA filter unit. The exhaust fans and the associated HEPA filter units reside on the surface and use various ducting to exhaust air from the UG.

Each UVFS and IVS HEPA filter unit has an inlet and outlet electronically operated isolation damper. A cross-connection is provided between the inlets and outlets of the two UVFS HEPA filter trains. Dampers can provide isolation of either UVFS HEPA filter train from the other. However, the UVFS HEPA filter units are normally required to both operate at the same time to avoid damaging the HEPA filter units from excessive exhaust fan draw. The IVS HEPA filter trains have isolation dampers at their inlets and outlets. The IVS can operate with one or both HEPA filter units at the same time with each HEPA filter unit served by an individual exhaust fan (SDD VU00). The UVFS/IVS both discharge exhaust air through a common discharge duct located downstream of the UVFS exhaust fans.

Operability of the UVFS/IVS requires that sufficient differential pressure is maintained in the Exhaust Drift and sufficient airflow is provided to the intake of disposal panels' Active Rooms. Table 5.5-3 identifies allowed UVFS/IVS exhaust fan and HEPA filter unit alignments that provide this required differential pressure. The various exhaust fan and filter alignments provide the required ventilation flowrates for the various operations that are performed in the UG and provide flexibility to Operations in maintaining the needed air flow requirements and the differential pressure. Flow studies in DN-5390-29, Revision 4, (performed by subject matter experts) have confirmed that the operation of the exhaust fans provides the required differential pressure at Bulkhead 308 to ensure the exhaust of the UG is through the Exhaust Shaft.

The configuration of the exhaust circuit is such that the required differential pressure can be maintained by operation of one exhaust fan. There are various alignments of the exhaust fans and associated HEPA units used that vary with respect to the activities that are to be performed in the UG. That is, as more equipment and activities are desired, the number of exhaust fans In Service may increase as required to provide acceptable airflow per the MSHA/permit requirements.

Air flow over the Waste Containers is ensured if air is moving into the disposal panel Active Rooms through S-2520 from W-170 and the correct 308 Bulkhead differential pressure is present. This flow direction combined with a negative pressure at the 308 Bulkhead confirms that all air in the disposal circuit is exhausted to E-300 to S-400 and up the Exhaust Shaft. The air flow direction entering the Active Rooms will travel over the Waste Containers regardless of the configuration of the regulators and/or doors in the various rooms within the panel. This verification of air flow direction is only required by this LCO when the room is occupied by facility workers. The Exhaust Drift airflow is required to be maintained through the UVFS/IVS filtration units. Measurement of differential pressures across each HEPA filter bank of each In Service HEPA filtration unit provides an indication that the UVFS/IVS is In Service. The required instrumentation for this system is listed in Table 5.5-4.

Table 5.5-3. Exhaust Fan and HEPA Filter Unit Alignments

Alignment	Exhaust Fans In Service[a, b]	Required HEPA Filter Units
1	41-B-860A, 41-B-860B, or 41-B-860C[c]	41-B-856 and 41-B-857
2	41-B-960A and 41-B-960B[d]	41-B-956 and 41-B-957
3	(41-B-860A, 41-B-860B, or 41-B-860C)[c] and (41-B-960A or 41-B-960B)[d]	(41-B-856 and 41-B-857) and (41-B-956 or 41-B-957)
4	(41-B-860A, 41-B-860B, or 41-B-860C)[c] and (41-B-960A and 41-B-960B)[d]	(41-B-856 and 41-B-857) and (41-B-956 and 41-B-957)

Notes:

a Operation of the SVS fan is not allowed at this time until authorized by DOE and subject to TSR page change approval by DOE.

b Operation of the UVS exhaust fans 41-B-700A, 41-B-700B, and 41-B-700C is prohibited at all times.

c Only one 860 Exhaust Fan may be In Service at any time, and must be aligned with both HEPA Filter Units 41-B-856 and 41-B-857.

d Exhaust fan 41-B-960 A is aligned with HEPA Filter Unit 41-B-956, and exhaust fan 41-B-960B is aligned with HEPA filter unit 41-B-957.

The UVFS/IVS is required to maintain a pressure differential between the UG Waste Handling Areas and the non-Waste Handling Areas such that airflow is always toward the Waste Handling Areas. The Waste Handling Areas should always be at a lower pressure, which will cause air to move from the non-waste area to the Waste Handling Area. Differential pressure across the 308 Bulkhead is measured to verify that negative air pressure is maintained in the exhaust drift to draw air to the Exhaust Shaft. The 308 Bulkhead is located in the exhaust drift in S-400 at E-300. Because of the alignment of the differential pressure instrumentation, a negative pressure indicates flow from E-140 towards E-300 and the Exhaust Shaft. A differential pressure transmitter at the 308 Bulkhead provides a signal to the CMR via the instrument loop as identified in Table 5.5-4. An audible alarm is sounded in the CMR if the differential pressure indication is outside the acceptable range (i.e., the alarm set point is reached). The local differential pressure indication for Bulkhead 308 is located in the CMR to allow a verification of the pressure without entering the UG.

Likewise, differential pressure transmitters are used to indicate the differential pressures across each HEPA filter bank of the In Service HEPA filter units to verify that exhaust air is being drawn through the HEPA filter units prior to release to the environment. The differential pressure indications are used to confirm the presence of flow through the HEPA filter units and potential loading of the HEPA filter units. The differential pressure across each HEPA filter bank of each HEPA filter unit is read by a differential pressure transmitter for each HEPA filter bank. The differential pressure transmitter for each HEPA filter bank provides a signal to the CMS via an instrument loop that provides a signal to the CMR where the differential pressure for each HEPA filter bank is displayed on one or more CMR monitors and audibly alarmed if outside the acceptable range.

To support the backfit analysis results for the CMS and associated instrumentation vulnerabilities, the requirement for local gauges on the HEPA filter banks was implemented in the system design. These gauges are used to assist in addressing the vulnerabilities in the CMS with respect to satisfying the SS classification of the equipment. The local gauges are configured independent of the associated pressure differential transmitter. The gauges are directly connected to the manifold and read the actual pressure

values of the system. The values that are to be protected in the safety basis are adjusted to support the specific instrument loop uncertainties. Therefore, the actual Operability values used in the LCO may be different for readings in two different locations but are established from the same safety analysis value. To address the vulnerabilities for the Bulkhead 308 pressure differential transmitter, a new instrument was installed which would satisfy the SS classification criteria by not sending its signal to the CMR through the CMS. The 308 Bulkhead differential pressure gauge is a SS instrument and alarm that has a direct feed to the CMR without relying upon the CMS. There is no indication of pressure in the CMR, only an alarm. The Bulkhead 308 Pressure Differential Indicating Transmitter (PDIT) has a local readout of the actual pressure value.

Additional UVFS/IVS system description information is contained in Chapter 4.0, Section 4.4.8, and Chapter 2.0, Section 2.7.3.7, of this DSA and the design parameters for the UVFS/IVS are described in SDD-VU00.

The UVFS/IVS is required to be Operable whenever Waste Containers are handled or stored in the UG to mitigate the potential radiological consequences that could result from internal container fires or deflagration, ordinary combustible material fires, and small pool non-collision fires.

5.5.5.1 Limiting Condition for Operation

An Operable UVFS/IVS protects facility workers at the Waste Face, and co-located workers outside of the UG from the consequences of a release of radiological particulate material. An Operable UVFS/IVS requires:

- In Service alignment of UVFS/IVS exhaust fan(s) and Operable HEPA filter unit(s) complement in accordance with Table 5.5-3.

  The lowest functional capability for an Operable UVFS/IVS is met by an In Service UVFS/IVS exhaust fan maintaining a negative pressure across the 308 Bulkhead, maintaining airflow into the Active Room, while manned, and discharging UG air from the exhaust drift through an Operable HEPA filter before discharging to the environment. The UVFS/IVS can be aligned in different configurations with the UVFS and IVS both in operation at the same time, or with only the UVFS or IVS in operation. If operating with only the IVS, both fans and the associated filter(s) must be Operable and In Service. The UVFS exhaust fans can only draw exhaust air from the UVFS HEPA filter units and likewise, the IVS exhaust fans can only draw exhaust air from the IVS HEPA filter units. Acceptable exhaust fan alignments with their HEPA filter units for the UVFS and IVS are identified in Table 5.5-3.

- Differential pressure across each In Service HEPA filter bank less than or equal to +3.89 inches w.g. and greater than or equal to +0.31 inches w.g. locally.

  Differential pressure across each HEPA filter bank of each In Service HEPA filter unit is measured at the differential pressure local gauges to verify it is maintained in the range of less than or equal to +3.89 inches w.g. and greater than or equal to +0.31 inches w.g. The maximum differential pressure allowed ensures that the HEPA filter banks are functioning properly and that the HEPA filter unit banks are not clogged or damaged. Likewise, the minimum differential pressure allowed ensures that the HEPA filter banks are not being bypassed. The values listed here include the instrument uncertainty values for the local gauges when applied to the desired safety basis value.

- In Service HEPA filter unit efficiency of greater than or equal to 99 percent.

  Each HEPA filter bank of each HEPA filter unit is tested annually to ensure it provides filtration efficiency of greater than or equal to 99 percent. This filtration efficiency significantly reduces the amount of radioactive particulate that could be released to the environment in the event of an accident. A HEPA unit consists of two banks and each bank must possess an acceptable efficiency for the unit to be considered Operable.

- Differential pressure less than or equal to -0.09 inches w.g. across the 308 Bulkhead in CMR.

  Operability of the UVFS/IVS requires that the ventilation system exhaust fans and HEPA filter complements are providing sufficient air draw from the UG where a radioactive release could occur, to ensure that this air is filtered prior to release to the environment. The specified value is based on the ventilation system maintaining adequate negative pressure across the 308 Bulkhead to ensure that air exhausted from the waste-side of the UG is filtered prior to release to the environment, and the adjustment to support the instrument uncertainty value for the local gauge.

- Airflow into the disposal panel Active Room while manned.

  Operability of the UVFS/IVS requires that airflow is drawn into the Active Room of the Disposal Panel and across the Waste Face away from the facility worker, while the room is manned. This condition provides assurance that the air is directed to the Disposal Panel exhaust drift. When the Active Room air pathway is present, it directs air away from facility workers working at the CH Waste Face and provides protection in the event of a radiological release event. When the differential pressure at the 308 Bulkhead is maintained negative, the exhaust side of the Active Room is at a lower pressure than the inlet side of the Active Room. Because air flow moves from high pressure to low pressure, the air must move into the Room. The layout of the disposal room for waste emplacement includes bulkheads on the exhaust side that can control the airflow in the room and direct airflow towards the waste exhaust drift. Therefore, airflow in the appropriate direction across the Waste Face and away from personnel is ensured. No quantitative flow rate is necessary to achieve the operability requirements; only verification of flow direction based on the qualitative evaluation of facility worker consequences. Verification of flow at the Active Room entrance is a direct representation of the flow into the room.

- Operable pressure differential instrumentation and CMR alarm indications as indicated in Table 5.5-4 and Table 5.5-5.

  UVFS/IVS Operability also requires that the differential pressure transmitters and instrument loops, with associated instrumentation, and local gauges that provide indication of differential pressure across the HEPA filters and at the 308 Bulkhead are Operable to provide accurate and timely indication of conditions affecting safety. Continued Operability of the instrumentation and instrument loops is ensured by specified instrumentation Calibration and Functional Tests.

The lowest functional capability for Operability of the UVFS/IVS is met by an In Service exhaust fan drawing air through an Operable HEPA filter unit before discharging to the environment. The UVFS/IVS is required to be In Service during the Waste Handling and Disposal Modes.

Table 5.5-4. UVFS/IVS, CMR Differential Pressure Instrumentation

Description	Loop	Transmitter	Applicable Alarm Set Points
41-B-856, 1st HEPA Bank	41F056015	413-PDT-056-015	≤ +3.94 inches w.g. (High) ≥ +0.26 inches w.g. (Low)
41-B-856, 2nd HEPA Bank	41F056005	413-PDT-056-005	≤ +3.94 inches w.g. (High) ≥ +0.26 inches w.g. (Low)
41-B-857, 1st HEPA Bank	41F056008	413-PDT-056-008	≤ +3.94 inches w.g. (High) ≥ +0.26 inches w.g. (Low)
41-B-857, 2nd HEPA Bank	41F056009	413-PDT-056-009	≤ +3.94 inches w.g. (High) ≥ +0.26 inches w.g. (Low
41-B-956, 1st HEPA Bank	41F321006A	413-PDIT-321-006A	≤ +3.94 inches w.g. (High) ≥ +0.26 inches w.g. (Low)
41-B-956, 2nd HEPA Bank	41F321007A	413-PDIT-321-007A	≤ +3.94 inches w.g. (High) ≥ +0.26 inches w.g. (Low)
41-B-957, 1st HEPA Bank	41F321006B	413-PDIT-321-006B	≤ +3.94 inches w.g. (High) ≥ +0.26 inches w.g. (Low)
41-B-957, 2nd HEPA Bank	41F321007B	413-PDIT-321-007B	≤ +3.94 inches w.g. (High) ≥ +0.26 inches w.g. (Low)
308 Bulkhead	54A160528	534-PDIT-160-528B	≤ -0.09 inches w.g.

Table 5.5-5. UVFS/IVS, Local Differential Pressure Instrumentation

Description	Local Gauge	Surveillance Acceptable Range
41-B-856, 1st HEPA Bank	413-PDI-056-016	≤ +3.89 inches w.g.(High) ≥ +0.31 inches w.g. (Low)
41-B-856, 2nd HEPA Bank	413-PDI-056-017	≤ +3.89 inches w.g.(High) ≥ +0.31 inches w.g. (Low)
41-B-857, 1st HEPA Bank	413-PDI-056-018	≤ +3.89 inches w.g.(High) ≥ +0.31 inches w.g. (Low)
41-B-857, 2nd HEPA Bank	413-PDI-056-019	≤ +3.89 inches w.g.(High) ≥ +0.31 inches w.g. (Low)
41-B-956, 1st HEPA Bank	413-PDI-321-026	≤ +3.89 inches w.g.(High) ≥ +0.31 inches w.g. (Low)
41-B-956, 2nd HEPA Bank	413-PDI-321-027	≤ +3.89 inches w.g.(High) ≥ +0.31 inches w.g. (Low)
41-B-957, 1st HEPA Bank	413-PDI-321-028	≤ +3.89 inches w.g.(High) ≥ +0.31 inches w.g. (Low)
41-B-957, 2nd HEPA Bank	413-PDI-321-029	≤ +3.89 inches w.g.(High) ≥ +0.31 inches w.g. (Low)
308 Bulkhead	534-PDIT-160-528B	≤ -0.09 inches w.g.

5.5.5.2 Surveillance Requirements for Underground Ventilation Filtration System/Interim Ventilation System

An Operable UVFS/IVS protects co-located workers outside the UG from the consequences of a release of radioactive particulate material. The UVFS/IVS also protects facility workers by ensuring airflow into a Disposal Panel Active Room. To ensure that the UVFS/IVS can perform its safety function of providing adequate exhaust to maintain required differential pressures in the UG, HEPA filtration, and alarm capabilities, surveillances of these features are required. This section details the SRs performed to verify these attributes of an Operable UVFS/IVS.

No additional SR is necessary to confirm Operability of the UVFS/IVS by maintaining the requisite negative differential pressure across the 308 Bulkhead. Essential operating parameters to confirm the negative pressure differential across the 308 Bulkhead are monitored, indicated, and alarmed in the CMR, which eliminates the need for periodic surveillances of these Operability attributes as discussed below.

Differential Pressure at the 308 Bulkhead

Verification of the differential pressure at the 308 Bulkhead is accomplished by a pressure differential transmitter signal input to the CMR that provides an audible alarm if outside the acceptable range.

UVFS/IVS Operability requires that a differential pressure is maintained of less than or equal to -0.09 inches w.g. at the 308 Bulkhead. This value is based on a desired differential pressure of being less than -0.05 as prescribed by the UVFS/IVS SDD (SDD VU00, *Underground Ventilation System Design Description*) to ensure adequate air draw in the Exhaust Drift towards the Exhaust Shaft and applying an instrument loop uncertainty, which gives a value of -0.09 inches w.g. Applicable instrument uncertainty calculations (CALC 15-029, *Loop Accuracy for a New Differential Pressure Transmitter at Bulkhead 308 Rev. 1*) prescribe the instrument loop uncertainty values to be applied. This value is the basis for the differential pressure audible alarm value in the CMR that allows for corrective action.

No additional SR is required for verification of the differential pressure at the 308 Bulkhead being less than or equal to -0.09 inches w.g. as a differential pressure of greater than or equal to -0.09 inches w.g. is audibly alarmed in the CMR, which is constantly manned to initiate required response actions. This is based upon the successful calibration and functional testing of the alarm indication in the CMR. Therefore, Daily routine surveillance of actual differential pressure values is not required.

The following active Surveillances will be performed at the specified Frequencies to verify the continuing Operability of the UVFS/IVS.

HEPA Filter Differential Pressure Verification (4.2.3.1)

Verification of differential pressure across each In Service HEPA filter bank of each HEPA filter unit is performed Daily by visual observation of the HEPA filter bank differential pressure local gauges as specified in Table 5.5-5, “UVFS/IVS, Local Differential Pressure Instrumentation.” The maximum differential pressure allowed for the HEPA filter units ensures that the HEPA filter banks are functioning properly to support assumed pre-accident filter capability and that the HEPA filter unit banks are not clogged or damaged. Establishing a maximum differential pressure limit also prevents filter blowout that could release unfiltered air into the exhaust stream. This is based on a desired differential pressure of less than or equal to +4.0 inches w.g. and applying instrument uncertainty (CALC 16-008, *Uncertainty of Mechanical Gauges for Differential Pressure Measurement Across HEPA Filter Banks*), which gives a value of +3.89 inches w.g. The allowed differential pressure maximum value of +4.0 inches w.g. is based

upon the *DOE Nuclear Air Cleaning Handbook* (DOE-HDBK-1169-2003) that recommends that HEPA filters "should be changed if the differential pressure [adjusted for rated flow] exceeds +4.0 in. w.g."

Likewise, the minimum differential pressure allowed for the HEPA filter banks ensures that the HEPA filter banks are not being bypassed. This value is based on a desired differential pressure of greater than +0.20 inches w.g. and applying calculated instrument loop uncertainty (CALC 16-008), which gives a value of +0.31 inches w.g.

Surveillance of the differential pressure across each HEPA filter bank of each In Service HEPA filter unit Daily by visual observation of the HEPA filter banks' differential pressure local gauge is adequate to verify UVFS/IVS Operability based upon prior acceptable HEPA filter loading indications, trending, and prior operational experience with known conditions that could cause excessive HEPA filter loading or possible HEPA filter bypass. The verification Daily of the differential pressure across the In Service HEPA filter banks of each In Service HEPA filter unit is adequate to demonstrate HEPA filter Operability based upon operational experience.

Alignment of UVFS/IVS Exhaust Fans and HEPA Filter Units (SR 4.2.3.2)

Verification is performed Daily to confirm that the In Service alignment of the UVFS/IVS exhaust fan(s) and Operable HEPA filter unit complement is in accordance with Table 5.5-3 by visual observation of the exhaust fan(s) and HEPA filter unit(s) operational status and alignment as indicated on the CMR monitors. A UVFS/IVS exhaust fan is normally operating at all times. Exhaust fan operation is indicated and monitored in the CMR. HEPA filter unit alignment is also indicated in the CMR. The Daily verification that the UVFS/IVS exhaust fans and HEPA filter units complements are properly aligned in accordance with Table 5.5-3 demonstrates that the UVFS/IVS is Operable.

Airflow into Active Room (SR 4.2.3.3)

To ensure that the facility worker at the Waste Face of an Active Room is provided the required airflow, a verification of the presence of airflow is performed prior to an Active Room entry, anytime that there is a change of exhaust fan alignment, when the Active Room is manned and following any change of ventilation bulkhead alignment that can affect the airflow to the Active Room while manned. Indication of airflow into the Active Room is obtained manually via a simple smoke test or by use of a calibrated anemometer airflow rate measurement or smoke/aerosol test confirmation of airflow direction into the Active Room. The anemometer flow rate measurement or smoke/aerosol test is taken in the intake drift of the Active Room while standing directly outside of the Active Room. Either method of flow verification is acceptable, but smoke testing is normally used for low flow conditions and anemometer for higher flow rates. ETO-Z-269, *Engineering Recommendations on how to Perform Air Flow Volume Readings in the WIPP Underground*, Rev. 1, provides the basis for the smoke flow test and the anemometer readings. The smoke test demonstrates airflow direction while the anemometer indicates airflow direction and flow rate. For entries that are not related to waste handling activities, a simple smoke test indicating flow direction is also acceptable. Either of the methods is acceptable to support directional flow across the Active Waste face to the exhaust drift. The frequency of prior to Active Room entry following any changes to the exhaust fan alignment, and following a change of the ventilation bulkhead alignment that can affect the flow to the Active Room is adequate to demonstrate that the UVFS/IVS is Operable and In Service, and providing airflow into the Active Room to allow facility workers safe entry and habitation of the room while performing work at the Waste Face. The frequency of prior to Active Room entry is typically completed at the start of the shift. The "prior to" frequency allows the verification of directional flow once per shift to satisfy the surveillance requirement. That is, re-performance is not required during the same shift provided the ventilation configuration has not changed. The SR verifies the air flow is in the proper direction toward the Waste Face. If there are changes to the ventilation bulkhead alignment or the

exhaust fan alignment, it could affect the air flow in the UG. Each time there is a change in either the bulkhead alignment or the exhaust fan alignment, the flow test must be completed to ensure the air flow is directed across the Waste Face.

HEPA Filter Efficiency (SR 4.2.3.4)

Performance of an aerosol test of HEPA filter units 41-B-856, 41-B-857, 41-B-956, and 41-B-957 is required Annually to demonstrate that each HEPA filter bank of each HEPA filter unit has an efficiency of greater than or equal to 99 percent.

The HEPA filter unit efficiency of each HEPA filter bank is confirmed by an in-place leak test performed in accordance with ASME N510. The in-place leak tests use a poly-dispersed aerosol test (0.3–0.7 micron aerodynamic equivalent diameter) and determines the system efficiency accounting for the system components (i.e., gaskets, frame, housing, etc.) that are typically challenged. The test is performed under actual conditions and at operational airflow in accordance with ASME N510 guidance by qualified/trained individuals. The performance testing allows for the correction and maintenance of the HEPA filter banks in the event the efficiency values are not a minimum of 99 percent, or within the SR acceptance criteria. The successful testing of each bank in the unit is required to determine the HEPA unit is greater than 99 percent efficient.

This SR verifies Annually that each HEPA filter bank of each HEPA filter unit provides filtration efficiency of greater than or equal to 99 percent. The Annual Frequency is based upon industry standard ASME N510 and operational experience.

Calibrated Instrumentation (SR 4.2.3.5)

Annual Calibration on the instrumentation for the differential pressure transmitter loop of Table 5.5-4 is used to verify Operability of the UVFS/IVS. This instrumentation includes the differential pressure transmitters used for measurement of differential pressure across each of the HEPA filter banks of the In Service HEPA filter units, and differential pressure transmitter used for measurement of the differential pressure at the 308 Bulkhead, and for the local gauges. The differential pressure instrumentation and instrument loops identified in Table 5.5-4, “UVFS/IVS, CMR Differential Pressure Instrumentation” and local gauges identified in Table 5.5-5 are subject to Calibration.

The loop elements that are calibrated include applicable pressure differential transmitters and pressure differential indicators as specified on the applicable calibration procedures. Calibration is performed by trained and qualified maintenance personnel.

Calibration is defined as a comparison of measuring and test equipment against a standard instrument of higher accuracy to detect, correlate, adjust, rectify, and document the accuracy of the instrument being compared. Calibration of an instrument is checked at several points throughout the calibration range of the instrument. If “as found” values are within tolerance, then this information is recorded on the Calibration Loop Data Sheets. If the “as found” loop values are not acceptable, the instrument is set to minimum pressure and zero value adjusted to the prescribed minimum value. The instrument is then set to maximum pressure and the span value adjusted to the prescribed maximum value. The zero and span adjustments are repeated until no further adjustments are necessary. The “as found” and “as left” calibration values are recorded on the Loop Data Sheets. DDC Calibration includes adjustment of the DDC Calibration offset for amount of needed adjustment and ensuring the indication is within the prescribed tolerance. “As found” and “as left values” are recorded on the Loop Data Sheets. Uncertainty calculations are used to define the necessary instrument minimum and maximum values to account for any instrument tolerances or loop uncertainties.

This SR performs differential pressure transmitter Calibration Annually on differential pressure instrumentation used to confirm UVFS/IVS Operability. The Annual Frequency is based upon industry recommended standard calibration frequencies for this type of instrumentation.

Functional Instrument Loop Alarm Test (SR 4.2.3.6)

An Annual Functional Test on differential pressure alarm instrument loops of Table 5.5-4 is used to confirm UVFS/IVS Operability. A Functional Test is required to confirm that each of the differential pressure transmitters and corresponding instrument loops provide accurate signal output to the CMS and result in an audible and visual CMR alarm for conditions outside the applicable alarm set points. The new 308 differential pressure gauge is a SS instrument with a direct line to the CMR and does not rely on the CMS.

The functional instrument loop alarm test is applied to the instrument loops used for indication of differential pressure across the 308 Bulkhead, and also to the instrument loops that provide indication of differential pressure across the UVFS/IVS HEPA filter banks.

The Annual differential pressure instrumentation loop Functional Test consists of injection of a simulated or actual signal into the instrument loop, at the input of the differential pressure transmitter, to verify Operability of the differential pressure instrumentation and audible and visual CMR alarm if outside the acceptable range. This SR verifies Annually that the differential pressure instrument loops provide an alarm signal to the CMR for the 308 Bulkhead high differential pressure value and high/low differential pressure across the UVFS/IVS HEPA filter banks. The individual signal from each HEPA filter differential pressure transmitter is verified to cause an audible alarm and visual indication in the CMR if outside the acceptable range.

The Annual Frequency is based upon industry recommended instrument loop Functional Test frequencies for this type of instrumentation

5.5.6 309 Bulkhead Operability during Download of Waste Containers (LCO 3.2.4)

Control Description: The UVFS/IVS shall be Operable during Download of Waste Containers.

The safety function of the UVFS/ IVS includes the element of mitigating the consequences of a release of radiological material at the Waste Shaft Station in the UG to acceptable levels by drawing air from this location to the Exhaust Shaft and filtering the air prior to its release to the environment.

The UVFS/IVS provides a credited mitigative function for ordinary combustible material fires that are postulated to occur at the Waste Shaft Station. Section 5.5.5 in Chapter 5.0 of this DSA discusses the elements of other safety functions of the UVFS/IVS and provides additional description of the UVFS/IVS Operability requirements. These attributes are established to ensure that UG air is HEPA filtered prior to release from the UG, and that air flow is provided at the active waste face when the room is manned. The 309 Bulkhead differential pressure control is an additional requirement for UVFS/IVS that is required to be available when Downloading is performed in the Waste Shaft Area. Therefore to support adequate control and mitigation of the potential for a release of radioactive material, the controls from Section 5.5.5 and this section are required to be in place during Downloading. A separate control was established for the 309 Bulkhead Operability requirement because of its conditional applicability, the different pressure requirements, and the requirement of three exhaust fans being In Service to address the potential upcasting condition in the Waste Shaft.

The 309 Bulkhead consists of two walls with a chamber in between. The differential pressure is measured from inside the chamber to the Waste Shaft Station side. A positive pressure indicates airflow is moving

from the bulkhead chamber to the Waste Shaft Station side ensuring no air can pass from the Waste Shaft Station side to W-30. This is important during Waste Container handling in the Waste Shaft. The UVFS/IVS ensures flow in this direction is maintained. Six small fans that are mounted on the 309 Bulkhead wall can be turned on to boost the internal pressure from the 309 Bulkhead chamber to the Waste Shaft Station side. These fans may be used as needed to comply with the Bulkhead 309 differential pressure requirements. If they are unavailable and the differential pressure cannot be maintained, safety is assured by not conducting waste downloading operations. Thus the fans themselves are not part of the SS safety function. Verifying the differential pressure from the 309 Bulkhead chamber to the Waste Shaft side ensures that the pressurized 309 Bulkhead chamber is preventing air from the Waste Shaft Station area from entering the construction circuit (W-30) and that air flow is from the 309 Bulkhead chamber to the Waste Shaft Station side. Differential pressure at the 309 Bulkhead is measured to verify that positive air pressure is maintained from the 309 Bulkhead chamber to the Waste Shaft Station. From there, differential pressure across the 308 Bulkhead is measured to ensure that differential pressure across the 308 Bulkhead is less than or equal to -0.09 inches w.g. to ensure air flow is moving from the Waste Shaft Station to the Exhaust Shaft.

The pressure requirement for the 309 Bulkhead is also supported by the operation of the UVFS/IVS exhaust fans as detailed in Section 5.5.5. These fans are needed to establish the required pressure at Bulkhead 308 to ensure that the UG air is properly exhausted through HEPA filtration before being released to the environment. The number of fans required to be In Service is based upon the activities being performed in the UG and the ability to maintain adequate differential pressure at Bulkhead 308. Ventilation studies, DN-5390-29, Revision 4, Memorandum, Keith Wallace, Mine Ventilation Services, Inc., to Jill Farnsworth, NWP, dated April, 2016, *Modeling UVFS/IVS Fan Configuration with Various NVPs and Upset Conditions*, have been performed that indicate a potential for upcasting can occur during certain temperature gradients between the UG and the surface. The study concluded that the majority of upcasting condition could be eliminated if the UVFS/IVS had three exhaust fans In Service and Bulkhead pressure was in the acceptable range and that he specified smoke test would ensure corrective action for any that remained.

Differential pressure is measured from the 309 Bulkhead chamber by the differential pressure transmitter as identified in Table 5.5-6. The UVFS/IVS is required to be Operable, which includes a requirement to maintain a positive differential pressure of +0.14 inches w.g. from the 309 Bulkhead chamber during Download operations as indicated locally. This value is based on a desired differential pressure being greater than or equal to +0.05 inches w.g., applying an instrument loop uncertainty (CALC 16-010), which gives a value of +0.14 inches w.g.

To support the backfit analysis results for the CMS and associated instrumentation vulnerabilities, the requirement of a local gauge was implemented in the system design. This gauge is used to assist in addressing the vulnerabilities in the CMS with respect to satisfying the SS classification of the equipment. The values that are to be protected in the safety basis are adjusted to support the specific instrument loop uncertainties. Therefore, the actual operability values used in the LCO may be different for readings in two different locations but are established from the same safety analysis value.

Additional UVFS/IVS system description information is contained in Chapter 4.0, Section 4.4.8, and Chapter 2.0, Section 2.7.3.7, of this DSA and the design parameters for the UVFS/IVS are described in SDD VU00.

The UVFS/IVS is required to be Operable when the UG is in the Waste Handling and Disposal Mode (i.e., when Waste Containers are outside a Closed Shipping Package and Waste is at risk). As such, it is also required to be Operable during Download of Waste Containers.

5.5.6.1 Limiting Condition for Operation

An Operable UVFS/IVS provides positive differential pressure across the 309 Bulkhead to protect co-located workers outside the UG from the consequences of a release of radiological particulate material. This LCO requires that the UVFS/IVS be Operable. An Operable UVFS/IVS includes the following elements:

- One UVFS exhaust fan (41-B-860A, 41-B-860B, or 41-B-860C) In Service.

  Operability of the UVFS requires sufficient draw of air from the Waste Shaft Station towards the 308 Bulkhead to ensure that the air is directed up the Exhaust Shaft and HEPA filtered prior to release to the environment. Sufficient air draw from the Waste Shaft Station is ensured if the UVFS/IVS is aligned such that all three exhaust fans are in operation at one time during Download of Waste Containers, negative pressure is maintained across the 308 Bulkhead, and airflow at the Waste Shaft Station is towards the 308 Bulkhead. As such, one of the UVFS exhaust fans (41-B-860A, 41-B-860B, or 41-B-860C) shall be In Service during Waste Container Downloads.

- Two IVS exhaust fans (41-B-960A and 41-B-960B) In Service.

  Both of the IVS exhaust fans are required to be In Service during Downloading of Waste Containers, in combination with one of the UVFS exhaust fans to ensure adequate airflow draw towards the 308 Bulkhead from the Waste Shaft Station.

- Differential pressure across the 309 Bulkhead greater than or equal to +0.14 inches w.g. locally.

  UVFS/IVS Operability requires that a differential pressure is maintained of greater than or equal to +0.14 inches w.g. as measured at the 309 Bulkhead and displayed on a differential pressure local gauge, which also represents the flow direction from between the 309 Bulkhead walls to S-400. This value is based on a desired differential pressure of being greater than or equal to +0.05 inches w.g. and applying a calculated instrument loop uncertainty (CALC 16-010, *Loop Uncertainty Accuracy for a New Differential Pressure Indicator at Bulkhead 309*). This results in a value of +0.14 inches w.g. locally. The specified value is based on the ventilation system maintaining adequate positive pressure across the 309 Bulkhead chamber to ensure that air is drawn from the 309 Bulkhead chamber towards the Waste Shaft Station and directed towards the Exhaust Shaft and exhausted through the UVFS/IVS HEPA filters prior to release to the environment.

- Airflow at the Waste Shaft Station is towards the 308 Bulkhead.

  Operability of the UVFS/IVS requires sufficient draw of air from the Waste Shaft Station towards the 308 Bulkhead to ensure that the air is directed up the Exhaust Shaft and HEPA filtered prior to release to the environment. This Operability requirement ensures that air from the Waste Shaft Station is not being drawn up the Waste Shaft instead of being directed towards the 308 Bulkhead, such as could occur during certain outside atmospheric conditions. This potential of airflow directly up the Waste Shaft is prevented with sufficient UVFS/IVS exhaust fan draw of air from the Waste Shaft Station towards the 308 Bulkhead. The use of airflow direction to support the verification was selected as detailed in the ventilation study, DN-5390-29, Revision 4, Memorandum, Keith Wallace, Mine Ventilation Services, Inc., to Jill Farnsworth, NWP, dated April 2016, *Modeling UVFS/IVS Fan Configuration with Various NVPs and Upset Conditions*. The check is a simple verification to show movement of airflow towards Bulkhead 308 and not up the Waste Shaft. The selection of this method was based upon location of the verification and the limitations of instrumentation in the Waste Shaft and Waste Tower. This local indication at the base of the Waste Shaft is the more direct indication of flow direction than use of differential

pressure instrumentation at the Waste Hoist Tower, which could be subject to fluctuations. Differential pressure indication at the Waste Hoist Tower is subject to pressure and flow effect of the Waste Conveyance movement and changes in the WHB door configurations, and the actual movement of the Waste down the Waste Shaft. A negative differential pressure indication in the Waste Hoist Tower might not indicate actual conditions at the Waste Shaft Station. The check of airflow direction is performed at the Waste Shaft Station immediately prior to the Downloading activity.

- Operable pressure differential instrumentation and CMR alarm indication as identified in Table 5.5-6 and Table 5.5-7.

  UVFS/IVS Operability also requires that the pressure differential transmitters and instrument loop with associated instrumentation, and local gauges that provide indication of differential pressure across the 309 Bulkhead are Operable to provide accurate and timely indication of conditions affecting safety. Continued Operability of the instrumentation and instrument loops is ensured by specified instrumentation Calibration and Functional Tests.

The lowest functional capability for Operability of the UVFS/IVS to maintain positive differential pressure across the 309 Bulkhead is met by three In Service exhaust fans drawing air through an Operable HEPA filter unit before discharging to the environment. The UVFS/IVS is required to be In Service during the Waste Handling and Disposal Modes.

Table 5.5-6. 309 Bulkhead, CMR Differential Pressure Instrumentation

Description	Loop	Transmitter	Applicable Alarm Set Points
309 Bulkhead	74H003001	534-PDT-003-001	≥ +0.18 inches w.g.

Table 5.5-7. 309 Bulkhead, Local Differential Pressure Instrumentation

Description	Local Gauge	Surveillance Acceptable Range
309 Bulkhead	534-PDI-003-001A	≥ +0.14 inches w.g.

5.5.6.2 Surveillance Requirements for 309 Bulkhead Operability during Download of Waste Containers

An Operable UVFS/IVS provides positive differential pressure across the 309 Bulkhead to protect co-located workers outside the UG from the consequences of a release of radioactive particulate material. To verify that the UVFS/IVS can perform its safety function of providing adequate pressures, filtration, and alarm capabilities, surveillances of these features are required. Section 5.5.5.2 to ensure Operability of the UVFS/IVS for UG operations, except for Download of Waste Containers that is addressed in this section.

This section details the SR of those additional attributes of an Operable UVFS/IVS system applicable to the 309 Bulkhead differential pressure that apply during Download operations. Download is defined as, “The transfer of Waste Containers from the Waste Shaft Collar Room to the Waste Shaft Station via the Waste Shaft Conveyance to the Vehicle Exclusion Zone or from the Vehicle Exclusion Zone to the Waste Shaft Collar Room.”

The following active Surveillances will be performed at the specified Frequencies to verify the continuing Operability of the UVFS/IVS relative to the differential pressure across the 309 Bulkhead.

Exhaust Fan Alignment (SR 4.2.4.1)

Verification of UVFS/IVS exhaust fan alignment such that all three exhaust fans are In Service at one time is performed to confirm UVFS/IVS Operability during Download of Waste Containers to the Waste Shaft or from the Waste Shaft Station to the Waste Shaft Collar Room. The surveillance is performed by visual observation of exhaust fan status as indicated in the CMR by graphic visual display on one or more CMR monitors. This SR requires one UVFS exhaust fan (41-B-860A, 41-860-B, or 41-B-860C) and two IVS exhaust fans (41-B-960A and 41B-960B) to be verified as being In Service prior to each Download of Waste Containers.

All three UVFS/IVS exhaust fans being In Service ensures sufficient draw of air from the Waste Shaft Station towards the 308 Bulkhead such that this air is directed to the Exhaust Drift and HEPA filtered prior to release to the environment. This ensures that no air would be released unfiltered up the Waste Shaft should a radioactive release event occur at the Waste Shaft Station during Download of Waste Containers. Verification prior to each Download ensures that air is being drawn from the Waste Shaft Station towards the 308 Bulkhead when the Waste Shaft Station area is most at risk and is adequate to support the short duration activity of Downloading Waste Containers.

Differential Pressure at 309 Bulkhead (SR 4.2.4.2)

Verification of differential pressure at the 309 Bulkhead is performed prior to each Download of Waste Containers by visual observation of the 309 Bulkhead pressure differential local gauges as specified in Table 5.5-7, “309 Bulkhead, Local Differential Pressure Instrumentation.”

UVFS/IVS Operability requires that a positive differential pressure is maintained from the 309 Bulkhead chamber to the Waste Shaft Station side of greater than or equal to +0.14 inches w.g. locally. This value is based on a desired differential pressure of being greater than or equal to +0.05 inches w.g. and applying a calculated instrument loop uncertainty (CALC 16-010). This results in a value of +0.14 inches w.g.

Surveillance of the differential pressure from the 309 Bulkhead chamber to the Waste Shaft Station side prior to each Download of Waste Containers by visual observation of the 309 Bulkhead pressure differential local gauge is adequate to demonstrate UVFS/IVS Operability for Waste Container Downloads.

Airflow at Waste Shaft Station (SR 4.2.4.3)

Verification of airflow direction from the Waste Shaft Station towards the 308 Bulkhead is performed to verify that air from the Waste Shaft Station area is not being drawn up the Waste Shaft prior to each Download of Waste Containers. Indication of airflow direction from the Waste Shaft Station towards the 308 Bulkhead is obtained manually via smoke/aerosol test with indication of airflow direction towards the 308 Bulkhead. The smoke/aerosol test is taken at the Waste Shaft Station where the Waste Conveyance would rest to unload Waste Containers at the bottom of the Waste Shaft. This is a limited scope simple activity and the Operators are trained on both the smoke and anemometer tests. Either the anemometer or the smoke test are simple to implement and the only requirement for the smoke test is to ensure that air flows in the right direction (i.e., from the Waste Shaft Station toward Bulkhead 308) after it is released. The smoke/aerosol is required to be performed prior to each Download, which is of limited duration (e.g., 15–30 minutes). Changes in the Waste Shaft airflow should be constant during this activity and are not expected to occur within this short duration of Downloading activities.

Surveillance of the airflow direction from the Waste Shaft Station towards the 308 Bulkhead prior to each Download of Waste Containers by smoke/aerosol test is adequate to demonstrate UVFS/IVS Operability for Waste Container Downloads.

Instrument Calibration (SR 4.2.4.4)

Annual Calibration of the instrumentation for the differential pressure instrument loop of Table 5.5-6 and a local gauge as specified in Table 5.5-7 is used to verify Operability of the UVFS/IVS during Download operations. The instrumentation and instrument loop subject to Calibration are identified in Table 5.5-6, "309 Bulkhead, CMR Differential Pressure Instrumentation" and Table 5.5-7, "309 Bulkhead, Local Differential Pressure Instrumentation."

The loop elements that are Calibrated include applicable pressure differential transmitters, alarms, and pressure differential indicators as specified on the applicable calibration procedures. Calibration is performed by trained and qualified maintenance personnel.

Calibration is defined as a comparison of measuring and test equipment against a standard instrument of higher accuracy to detect, correlate, adjust, rectify, and document the accuracy of the instrument being compared. Calibration of an instrument is checked at several points throughout the calibration range of the instrument. If "as found" values are within tolerance, then this information is recorded on the Calibration Loop Data Sheets. If the "as found" loop values are not acceptable, the instrument is set to minimum pressure and zero value adjusted to the prescribed minimum value. The instrument is then set to maximum pressure and the span value adjusted to the prescribed maximum value. The zero and span adjustments are repeated until no further adjustments are necessary. The "as found" and "as left" calibration values are recorded on the Loop Data Sheets.

This SR performs differential pressure transmitter instrument loop Calibration Annually on differential pressure instrumentation used to confirm UVFS/IVS Operability during Download operations. The Annual Frequency is based upon industry recommended standard calibration frequencies for this type of instrumentation.

Functional Instrument Loop Alarm Test (SR 4.2.4.5)

An Annual Functional Test on the differential pressure alarm instrument loop of Table 5.5-6 is used to confirm UVFS/IVS Operability during Download operations. A Functional Test is required to confirm that the differential pressure transmitter and corresponding instrument loop provide accurate signal and indication of conditions outside the applicable alarm set points via audible/visual CMR alarm. The functional instrument loop alarm test is applied to the instrument loop used for indication of differential pressure at the 309 Bulkhead.

The Annual differential pressure instrumentation loop Functional Test consists of injection of a simulated or actual signal into the instrument loop, at the input of the differential pressure transmitter, to verify Operability of the differential pressure instrumentation. This SR verifies Annually that the differential pressure instrument loop provides an audible and visual CMR alarm for conditions outside the acceptable set point values. The Annual Frequency is based upon industry recommended instrument loop Functional Test frequencies for this type of instrumentation.

5.5.7 Battery Exhaust Filtration System (LCO 3.2.5)

Control Description: The WHB Battery Exhaust Filtration System shall be Operable.

The Battery Charging Station that is located on the north side of the CH Bay has a separate exhaust system from the CH WH CVS. The Battery Exhaust Filtration System provides for the removal of hydrogen when battery charging is in progress in the Battery Charging Station. Additionally, the TRUDOCK and TRUPACT-III exhaust hoods are connected to the Battery Exhaust Filtration System that provides HEPA filtration prior to exhaust to the environment.

The safety function of the WHB Battery Exhaust Filtration System is to mitigate the consequences of radiological material releases from non-NPH fire events when In Service to acceptable levels by filtering air from the CH Bay and Room 108 that could potentially bypass the CH WH CVS prior to its release to the environment.

An unfiltered release of radiological material as a result of pool fires, ordinary combustible material fires, vehicle collision with fire, or internal CH Waste Container fires, or a fire could affect co-located workers outside the WHB.

CH Waste is brought into the CH Bay or Room 108 in Closed Type B Shipping Packages. The Type B Shipping Packages are opened and CH Waste is removed, prepared, and transferred to the Waste Shaft Conveyance for disposal in the UG. The TRUDOCK and TRUPACT-III exhaust hood systems are utilized during evacuation and opening of the Type B Shipping Packages. Therefore, LCO 3.2.5 is applicable in the Waste Handling Mode and Waste Storage Mode when the Battery Exhaust Filtration System exhaust fans are In Service.

The Battery Exhaust Filtration System includes two HEPA filter units (41-B-834 and 41-B-979) with two exhaust fans (41-B-835 and 41-B-836). HEPA filter unit 41-B-834 is aligned with exhaust fan 41-B-835 and HEPA filter unit 41-B-979 is aligned with exhaust fan 41-B-836. Each HEPA filter unit includes one bank of moderate efficiency filters and two banks of HEPA filters. One exhaust fan and HEPA filter unit is on standby status.

The Battery Exhaust Filtration System is a SS SSC that consists of, dampers, exhaust fans, HEPA filter units, control systems, and instrumentation supporting system indications. The exhaust portion of the system is credited to support the safety function. For the exhaust capability, two Battery Exhaust Filtration System HEPA filter units provide the air filtration function for exhaust air from the CH Bay and Room 108.

Operability of the Battery Exhaust Filtration System requires that exhaust airflow is maintained through Battery Exhaust Filtration System HEPA filter units when the Battery Exhaust Filtration System exhaust fans are In Service. Measurement of positive differential pressure across each HEPA filter bank of each In Service HEPA filter unit provides an indication that the Battery Exhaust Filtration System is In Service. The required instrumentation for this system is listed in Table 5.5-8 and the local gauges as indicted in Table 5.5-9.

Table 5.5-8. Battery Exhaust Filtration System, CMR Differential Pressure Instrumentation

Description	CMR Instrument Loop	Transmitter	Applicable CMR Alarm Set Points
41-B-834, 1st HEPA Bank	41F05207	411-PDT-052-007	≤ +3.93 inches w.g. (High) ≥ + 0.27 inches w.g. (Low)
41-B-834, 2nd HEPA Bank	41F05208	411-PDT-052-008	≤ +3.93 inches w.g. (High) ≥ + 0.27 inches w.g. (Low)
41-B-979, 1st HEPA Bank	41F05218	411-PDT-052-018	≤ +3.93 inches w.g. (High) ≥ + 0.27 inches w.g. (Low)
41-B-979, 2nd HEPA Bank	41F05219	411-PDT-052-019	≤ +3.93 inches w.g. (High) ≥ + 0.27 inches w.g. (Low)

Table 5.5-9. Battery Exhaust Filtration System, Local Differential Pressure Instrumentation

Description	Local Gauge	Surveillance Acceptable Range
41-B-834, 1st HEPA Bank	411-PDI-052-007B	≤+3.92 inches w.g. (High) ≥+0.28 inches w.g. (Low)
41-B-834, 2nd HEPA Bank	411-PDI-052-008B	≤+3.92 inches w.g. (High) ≥+0.28 inches w.g. (Low)
41-B-979, 1st HEPA Bank	411-PDI-052-018B	≤+3.92 inches w.g. (High) ≥+0.28 inches w.g. (Low
41-B-979, 2nd HEPA Bank	411-PDI-052-019B	≤+3.92 inches w.g. (High) ≥+0.28 inches w.g. (Low

Differential pressure transmitters are used to indicate the differential pressures across each HEPA filter bank of the In Service HEPA filter units to ensure that exhaust air is being drawn through the HEPA filter units prior to release to the environment. The differential pressure across each HEPA filter bank of each HEPA filter unit is read by a differential pressure transmitter for each HEPA filter bank. The differential pressure transmitter for each HEPA filter bank provides a signal to the CMS via an instrument loop that provides a signal to the CMR where the differential pressure for each HEPA filter bank is displayed on one or more CMR monitors and audibly alarmed if outside the acceptable range. Differential pressure across each HEPA filter bank is displayed locally.

To support the backfit analysis results for the CMS and associated instrumentation vulnerabilities, the requirement for local gauges was implemented in the system design. These gauges are used to assist in addressing the vulnerabilities in the CMS with respect to satisfying the SS classification of the equipment. The local gauges are configured independent of the associated pressure differential transmitter. The gauges are directly connected to the manifold and read the actual pressure values of the system. The safety analysis values that are to be protected in the safety basis are adjusted to support the specific instrument loop uncertainties. Therefore, the actual Operability values used in the LCO may be different for readings in two different locations but are established from the same safety analysis value.

Additional Battery Exhaust Filtration System description information is contained in Chapter 4.0, Section 4.4.4.6, and Chapter 2.0, Section 2.4.1.1.2, of this DSA and the design parameters for the Battery Exhaust Filtration System are described in SDD HV00.

The WHB Battery Exhaust Filtration System is required to be Operable when the WHB is in Waste Handling or Waste Storage Modes and a Battery Exhaust fan is In Service (i.e., when Waste Containers are outside a Closed Shipping Package and Waste is at risk). The WHB Battery Exhaust Filtration System is not required to be Operable during Standby Mode as CH Waste is not present or is in a Closed Shipping Package with site-derived Waste in a closed Waste Container and when a fan is not In Service since there is no viable exhaust path provided to the environment.

5.5.7.1 Limiting Condition for Operation

An Operable WHB Battery Exhaust Filtration System protects co-located workers outside the WHB from the consequences of a release of radiological particulate material when a battery exhaust fan is In Service. An Operable WHB Battery Exhaust Filtration System requires the following:

- One Operable HEPA filter unit (41-B-834 or 41-B-979) In Service.

  Each HEPA filter unit is sized to support the air flow rate from one exhaust fan. Each HEPA filter unit consists of one moderate efficiency filter bank and two, in series, HEPA filter banks. The HEPA filter units (41-B-834 or 41-B-979) are considered Operable when the differential pressure across each In Service HEPA filter unit is less than or equal to + 3.92 inches w.g. and greater than or equal to + 0.28 inches w.g. locally, and that each HEPA filter unit has been tested Annually to ensure it is greater than or equal to 99 percent efficient.

- Differential pressure across each In Service HEPA filter bank less than or equal to +3.92 inches w.g. and greater than or equal to + 0.28 inches w.g. locally.

  Differential pressure across each HEPA filter bank of each In Service HEPA filter unit is measured at the differential pressure local gauges to verify it is maintained in the range of less than or equal to +3.92 inches w.g. and greater than or equal to +0.28 inches w.g. The maximum differential pressure allowed ensures that the HEPA filter banks are functioning properly and that the HEPA filter unit banks are not clogged or damaged. Likewise, the minimum differential pressure allowed ensures that the HEPA filter banks are not being bypassed.

- In Service HEPA filter unit efficiency of greater than or equal to 99 percent.

  Each HEPA filter bank of each HEPA filter unit is tested Annually to ensure it provides filtration efficiency of greater than or equal to 99 percent. This filtration efficiency significantly reduces the amount of radioactive particulate that could be released to the environment in the event of an accident. A HEPA unit consists of two banks and each bank must possess an acceptable efficiency of greater than or equal to 99 percent for the unit to be considered Operable.

- Operable pressure differential instrumentation and CMR alarm indications as identified in Table 5.5-8 and local gauges as identified in Table 5.5-9.

  WHB Battery Exhaust Filtration System Operability requires that the differential pressure transmitters and instrument loops, with associated instrumentation, and local gauges that provide indication of differential pressure across the HEPA filters are Operable to provide accurate and timely indication of conditions affecting safety. Continued Operability of the instrumentation and instrument loops is ensured by specified instrumentation Calibration and Functional Tests.

5.5.7.2 Surveillance Requirements for the Battery Exhaust Filtration System

An Operable WHB Battery Exhaust Filtration System protects co-located workers outside the WHB from the consequences of a release of radioactive particulate material when a system fan is In Service. To ensure that the WHB Battery Exhaust Filtration System can perform its safety function of providing adequate pressures, filtration, and alarm capabilities, surveillances of these features are required. This section details the SRs of these attributes of an Operable system.

HEPA Filter Differential Pressure (SR 4.2.5.1)

Verification of differential pressure across each In Service HEPA filter bank of each HEPA filter unit is performed Daily by visual observation of the HEPA filter bank differential pressure gauges as specified in Table 5.5-9, "Battery Exhaust Filtration System, Local Differential Pressure Instrumentation."

The maximum differential pressure allowed for the HEPA filter banks verifies that the HEPA filter banks are functioning properly to support assumed pre-accident filter capability and that the HEPA filter banks are not clogged or damaged. Establishing a maximum differential pressure limit also prevents filter blowout that could release unfiltered air into the exhaust stream. This value is based on a desired differential pressure of less than or equal to +4.0 inches w.g. and applying an instrument uncertainty (CALC 16-007, *Room and HEPA Uncertainty*), which gives a value of +3.92 inches w.g. locally. The allowed differential pressure maximum value of +4.0 inches w.g. is based upon the *DOE Nuclear Air Cleaning Handbook* (DOE-HDBK-1169-2003), which recommends that HEPA filters "should be changed if the differential pressure [adjusted for rated flow] exceeds 4.0 inches w.g."

Likewise, the minimum differential pressure allowed for the HEPA filter banks ensures that the HEPA filter banks are not being bypassed. This value is based on a desired differential pressure of greater than +0.20 inches w.g. and applying calculated instrument loop uncertainty (CALC 16-007), which gives a value of +0.28 inches w.g. locally.

Surveillance of the differential pressure across each HEPA filter bank of each In Service HEPA filter unit Daily by visual observation of the HEPA filter banks pressure differential local gauges is adequate based upon prior HEPA filter loading indications, trending, and prior operational experience with known conditions that could cause excessive HEPA filter loading or possible HEPA filter bypass. The verification Daily of the differential pressure across the In Service HEPA filter banks of each In Service HEPA filter unit is adequate to demonstrate HEPA filter Operability based upon operational experience.

HEPA Filter Efficiency (SR 4.2.5.2)

Performance of an aerosol test of HEPA filter units 41-B-834 and 41-B-879 is required Annually to demonstrate that each HEPA filter unit has an efficiency of greater than or equal to 99 percent.

Each HEPA filter bank of each HEPA filter unit of the WHB Battery Exhaust Filtration System is efficiency-tested Annually and maintained in accordance with ASME N510, *Testing of Nuclear Air Treatment Systems*. The HEPA filter banks' efficiency is confirmed by an in-place leak test performed in accordance with ASME N510. The in-place leak tests use a poly-dispersed aerosol test (0.3–0.7 micron aerodynamic equivalent diameter) and determines the system efficiency accounting for the system components (i.e., gaskets, frame, housing, etc.) that are typically challenged. The test is performed under actual conditions and at operational airflow in accordance with ASME N510 guidance by qualified/trained individuals. The performance testing allows for the correction and maintenance of the HEPA filter banks in the event the efficiency values are not a minimum of 99 percent. The successful testing of each bank in the unit having an efficiency of greater than or equal to 99 percent is required to

determine the HEPA unit is greater than 99 percent efficient. This SR verifies Annually that each HEPA filter bank of each HEPA filter unit provides filtration efficiency of greater than or equal to 99 percent for the WHB CH Bay and Room 108 air exhausted to the environment. The Annual Frequency is based upon industry standard ASME N510 and operational experience.

Calibrated Instrumentation (SR 4.2.5.3)

Annual Calibration on the instrumentation for each differential pressure transmitter loop of Table 5.5-8 is used to verify Operability of the WHB Battery Filtration Exhaust System. This instrumentation includes the pressure transmitters used for measurement of differential pressure across each of the HEPA filter banks of the In Service HEPA filter units, associated alarms, and associated local gauges. The differential pressure instrumentation for the instrument loops identified in Table 5.5-8, “Battery Exhaust Filtration System, CMR Differential Pressure Instrumentation” and local gauges as identified in Table 5.5-9 are subject to Calibration.

The loop elements that are Calibrated include applicable differential pressure transmitters and pressure differential indicators as specified on the applicable calibration procedures. Calibration is performed by trained and qualified maintenance personnel.

Calibration is defined as a comparison of measuring and test equipment against a standard instrument of higher accuracy to detect, correlate, adjust, rectify, and document the accuracy of the instrument being compared. Calibration of an instrument is checked at several points throughout the calibration range of the instrument. If “as found” values are within tolerance, then this information is recorded on the Calibration Loop Data Sheets. If the “as found” loop values are not acceptable, the instrument is set to minimum pressure and zero value adjusted to the prescribed minimum value. The instrument is then set to maximum pressure and the span value adjusted to the prescribed maximum value. The zero and span adjustments are repeated until no further adjustments are necessary. The “as found” and “as left” calibration values are recorded on the Loop Data Sheets. DDC Calibration includes adjustment of the DDC Calibration offset for amount of needed adjustment and ensuring the indication is within the prescribed tolerance. “As found” and “as left values” are recorded on the Loop Data Sheets. Uncertainty calculations are used to define the necessary instrument minimum and maximum values to account for any instrument tolerances or loop uncertainties.

This SR performs differential pressure transmitter Calibration Annually on differential pressure instrumentation used to confirm WHB Battery Exhaust Filtration System Operability. The Annual Frequency is based upon industry recommended standard calibration frequencies for this type of instrumentation.

Functional Instrument Loop Alarm Test (SR 4.2.5.4)

An Annual Functional Test on differential pressure alarm instrument loops of Table 5.5-8 is used to confirm WHB Battery Exhaust Filtration System alarm Operability. A Functional Test is required to confirm that each of the pressure differential transmitters and corresponding instrument loops provide accurate signal output to the CMS and result in an audible CMR alarm for conditions outside the applicable alarm set points and visual indication on one or more monitors. The functional instrument loop alarm test is applied to the instrument loops used for indication of differential pressure across the WHB Battery Exhaust Filtration System HEPA filter banks.

The Annual differential pressure instrumentation loop Functional Test consists of injection of a simulated or actual signal into the instrument loop, at the input of the differential pressure transmitter, to verify Operability of the differential pressure instrumentation and audible and visual CMR alarm if outside the

acceptable range. This SR verifies Annually that the differential pressure instrument loops provide an alarm signal to the CMR for the high and low differential pressures across the WHB Battery Charging Station CVS HEPA filter banks. The individual signal from each differential pressure transmitter is verified to cause an audible and visual alarm in the CMR. The Annual Frequency is based upon industry recommended instrument loop Functional Test frequencies for this type of instrumentation.

5.5.8 Waste Hoist Brakes (LCO 3.8.1)

Control Description: The Waste Hoist Brakes shall have Operable brake units, an Emergency Dump Valve, and a Lilly Controller.

The safety function of the Waste Hoist Brakes is to prevent damage to TRU Waste Containers by reducing the likelihood of an uncontrolled Waste Conveyance movement that results in a loss of confinement and the release of radiological materials.

The Waste Hoist Brakes shall stop a fully loaded conveyance from uncontrolled movement of the Waste Hoist without breaching the TRU Waste Containers. Upon actuation the Waste Hoist Brakes will relieve hydraulic pressure on the brake springs and set the brakes upon a Waste Conveyance over speed condition or upon a loss of electrical power.

The Waste Hoist Structure with its support framework, conveyance, cabling, and counterweight is also required to ensure Operability of the Waste Hoist Brakes.

The Waste Hoist Brakes are a subsystem of the Waste Hoist. See SDD UH00, *Underground Hoisting System*, for a description of the Waste Hoist and the Waste Hoist Brakes. The following is a brief summary of some of the key operational requirements of the Waste Hoist Brakes.

The Waste Hoist Brakes SS components consist of four brake units (two units each on the East and West hoist drum brake discs), a Lilly Controller with associated governors and contacts, and two emergency dump valves (i.e., valves SV-2 and SV-5). Each brake unit consists of 2 modules per unit, one module on each side of the disc and includes the spring, brake pads of a material and surface area as defined by the brake manufacturer, and the caliper housing.

The SDD states that any two Operable brake units are capable of stopping a maximally loaded hoist. Calculation ETO-H-228, *Evaluation of the Stopping Distance of a Descending Waste Shaft Conveyance Utilizing Two Brake Units*, documents that any two brake units are capable of stopping the Waste Conveyance movement at its maximum design travel speed of 500 feet per minute plus a 10 percent allowance. The system is designed with four brake units and each of the four brake units are tested and verified to be Operable. Therefore, although the minimum Operability requirement is two brake units, to ensure the system is fully Operable and complies with the MSHA operability requirements, all four brake units are required to be Operable as the Waste Hoist will not be operated unless all four brake units are fully operational.

The brake units are automatically set by spring force from modules on each side of the disc. To release the brakes one of the two redundant hydraulic pumps is started. One pump provides hydraulic fluid to both the East and West disc brakes via redundant spool valves. The hydraulic pressure applied to the brake calipers release the spring force on the brakes. The brake pads move away from the brake disc allowing the disc and the hoist drum to rotate. Electrically energized spool valves SV-4 and SV-6 apply hydraulic pressure to release the West brakes, while SV-3 and SV-1 apply pressure to release the East disc brakes. The emergency dump valves, SV-2 and SV-5, are closed electrically to hold the brakes open and are de-energized to relieve the pressure and allow the brakes to set. Dump valves SV-2 and SV-5 are

piped together so that if only one dump valve opens, the hydraulic pressure is released from all four brake units. Upon a loss of electric power, the energized valves de-energize and return to either their normal open or closed state. The four spool valves would have to remain in the open position, the emergency dump valves would have to remain closed, and pump pressure would have to be maintained for the brakes to remain in the released position. If any one of the four spool valves goes to the closed position or either of the dump valves goes to the open position, the hydraulic pressure on the brakes is released and the spring force in the calipers automatically applies pressure to the pads setting the brakes. In addition to all six valves remaining in the energized state, the pump would have to remain running at full discharge pressure to maintain pressure on the caliper springs.

SV-7 directs the hydraulic fluid flow from SV-4, SV-6, SV-1, and SV-3 back to the appropriate pump reservoir. In normal operations, when brake set is needed, and the brake pressure has not dropped below 1,200 pounds per square inch (psi) within 1 to 2 seconds (emergency stop), dump valves SV-2 and SV-5 will de-energize (i.e., open) sending hydraulic fluid to SV-11 that directs fluid back to the appropriate pump reservoir. The emergency dump valves do not open during a normal conveyance stop unless the spool valves have not opened and set the brakes within a preset time. Additionally, there is a manual release dump valve that can be actuated to release the hydraulic pressure on the brakes. The emergency dump valves are tested during the pre-operational checks to ensure that the dump valves will open upon demand and set the Waste Hoist Brakes.

Upon any event that results in an electrical power loss, the valves fail to their normal open or closed state. This prevents hydraulic pressure from being applied to the brakes, ensuring the brakes set. A loss of electrical power event also removes power to the hydraulic pumps removing hydraulic pressure on the brake springs.

Hoist speed is controlled by the process controller and monitored by the Lilly controller. In an over speed condition, either will de-energize the valves and the hydraulic pump to remove pressure from the springs allowing the brakes to set. Although the process controller, a non-credited component, will set the brakes under normal conditions, the Lilly Controller is credited to set the brakes in an over speed condition. When the over speed test is conducted, the process controller will create an over speed condition to verify that the Lilly Controller will detect the over speed condition and set the brakes. Upon detecting an over speed condition, the operator (as well as any of the shaft tenders, personnel on the conveyance or the 4th and 5th floors) can press the emergency stop (E-stop) button. However, as this requires an operator action, the E-stop buttons are not credited as a control. This will de-energize all six valves, which will apply the brakes. This provides three methods to apply the hoist brakes in the event of an over speed condition: process controller, Lilly controller, and operator action. Only the automatic features are credited to set the brakes and stop the conveyance.

The Functional Test described above verifies that on an over speed condition, the emergency dump valves open. A separate test verifies that only the emergency dump valves open as required without an over speed condition and set the brakes.

The Lilly Controller, the credited component, that monitors the hoist speed consists of a shaft with cams, two inertial (weight type) governors (so called fly-ball governors), a shaft that moves down as the ball spin speed increases, floating levers attached to the arm, and contact blocks. At a hoist conveyance over speed condition of approximately 550 fpm (maximum design speed of 500 fpm plus a 10 percent allowance), the Lilly Controller will remove the electric power to the emergency dump valves. A power interruption anywhere in the control system will automatically release the hydraulic pressure and set the brakes.

SDD UH00 Chapter 3, Section 2.2.1.1, states that the operating speed of the Waste Conveyance is 500 fpm. With an over speed allowance of 10 percent, the Operability limit for the over speed controller will be 550 fpm. This is the design value for the conveyance speed based on the hoist design and the maximum weight for the conveyance. To provide over speed protection for the Waste Hoist, the over speed Lilly controller was designed thru gear ratios, springs and linkage by the manufacturer with a 10 percent margin over the maximum speed of 500 fpm. This value of 550 fpm is a set value that is not adjustable by the WIPP personnel. The value is important in that it supports the braking calculation for the brake capability of stopping a full hoist at 600 fpm.

WIPP normally does not operate a fully loaded Waste Conveyance at 500 fpm. Additionally, the Functional (pre-operational) Test of the over speed controller is done at a slower speed than the 550 fpm limit. ETO-H-228, documents that two Waste Hoist Brake Units will stop the conveyance within a 30-foot travel distance at speeds of 550 and 600 fpm. The daily test of the over speed controller at a lower speed demonstrates that the over speed controller is operational and will stop the conveyance at operational speeds lower than the maximum design speed. The Functional Test and the ETO-H-228 verification that the brakes will stop a fully loaded Waste Conveyance at speeds less than or equal to 550 fpm adequately demonstrate that the brakes will be set if an over speed condition is reached at any point during hoist travel.

Through appropriate gearing the main cam wheel of the Lilly makes one third of a revolution for full travel of the hoist. Wheels with cams activate arms at various positions of the conveyance and these arms operate switches to ensure that the conveyance is at the appropriate speed for various positions in the shaft. Two inertial governors mounted on the Lilly monitor the speed of the conveyance. Speed governor contacts are used to indicate that a “Loss of Lilly” condition has occurred, and to ensure that the speed of the conveyance is within specified limits. The fly-ball governor operates by centrifugal force, which causes the balls to spin around a shaft. As the speed of the hoist increases, the weighted balls spin faster and rise toward a horizontal plane resulting in the collar to which the balls are attached pushing down a center shaft. As the collar moves down, the center shaft moves floating levers. When the floating levers move an arm to a preset level, the arm motion removes the connection between two contacts. This opens the circuit supplying electric power to the hydraulic system. To support various over speed values in the shaft (i.e., top, middle, and bottom) the design was provided with various retard cams. These retard cams shorten the distance that the plunger has to travel before causing an over speed trip. This cam design is used so that there is no linkage or gear changes required for the over speed values in the various areas of the shaft. The loss of electrical power to the hydraulic system causes emergency dump valves SV-2 and SV-5 to open. The open dump valves return the hydraulic fluid to the running pump reservoir, which results in a loss of hydraulic pressure and allows the spring force to set the brakes.

For the Waste Hoist to be Operable to simply move a loaded or unloaded conveyance up and down the shaft, electric power must be supplied to the control system, valves, and other components of the Waste Hoist Brake System. This requires many components (permissives), some of which are credited with Ensuring Operability per this control and others that are non-credited components (e.g., the limit switches associated with the Brake Set Light). Each of these components must be Operable and In Service and all the permissives must be connected in a particular arrangement or line-up to allow electric power to be applied to the appropriate brake components. If only one of the permissives is not in the correct alignment, the brakes will be inoperable as electric power will not be applied to the control system. One permissive input is the over speed control. If the over speed controller senses the hoist is in an over speed condition, it breaks the link between two contacts thereby removing electrical power to the control system. The loss of electrical power will create a loss of hydraulic pressure on the brake caliper springs allowing the brakes to be set.

The Brake Set Light provides an indication that the brakes have set. For the Brake Set Light to illuminate, eight limit switches, one per brake module (or two per brake unit) must be made. All eight limit switches must be in the same state (either open or closed). If one or more of the switches are not in the same position/state as the others, the permissives are not made and the hoist will not operate. Specifically if one of the switches fails in the closed position (e.g., contacts stick together or switch/button is stuck) and the other seven switches open, the Brake Set Light will not illuminate and the hoist will not operate as all the switches and permissives necessary for operation are not in the same state.

The Waste Hoist Brakes are required to be Operable during the Waste Handling Mode during Downloading.

5.5.8.1 Limiting Condition for Operation

The following attributes of the Waste Hoist Brakes protect the accident analysis when Downloading CH or RH Waste on the Waste Conveyance:

- The brakes shall apply adequate pressure by the brake pads on the brake disc to stop a maximally loaded conveyance within 30 feet of travel distance after application of the brakes.
- The Waste Hoist Brakes automatically apply the brakes upon loss of hydraulic pressure as a result of:
  - conveyance over speed.
  - loss of electric power.
- Brake pad material is greater than or equal to 0.5 inch thick.

These attributes are protected by ensuring that the Waste Hoist Brakes are Operable. Operability is confirmed by the requirements identified in the LCO statement below.

Operable Waste Hoist Brakes prevent damage to the TRU Waste Containers that could result from an uncontrolled Waste Conveyance movement. By preventing damage to the TRU Waste Containers, a potential loss of confinement and release of radiological materials does not occur.

The minimum Operability requirements of the Waste Hoist Brakes are:

- All four (4) brake units shall be Operable, each with two modules containing calipers, springs, and brake pads greater than or equal to 0.5 inches thick that, when automatically applied, engage the brakes on a loss of power or over speed condition.
- Two emergency dump valves, SV-2 and SV-5, are Operable. When de-energized the dump valves fail open to drain the hydraulic fluid back to the appropriate reservoir.
- A Lilly Controller monitors the conveyance speed and in an over speed condition interrupts electric power to the control circuit and causes the dump valves to de-energize (i.e., fail in the open position).

The Operable brake units ensure that the Waste Hoist Brakes are capable of stopping the fully loaded conveyance upon demand.

An Operable dump valve ensures that upon loss of electric power, the valves will open releasing the hydraulic pressure on the brake calipers allowing the springs to set the brakes.

The Lilly Controller, through the mechanical linkage of the roller on the retarding cam, allows the flyball governors to lift the link between two electrical contacts thereby interrupting power to the control system and causing the brakes to set.

The proper brake pad thickness ensures that the spring force is at or above the minimum of 37,000 pounds as measured by the caliper travel distance to ensure the brake springs exert sufficient force on the pads and the drum disc to stop the hoist.

The Waste Hoist Brakes are required to be Operable at all times that Waste is on the conveyance for movement. This applies to Waste Handling Activities during Downloading. Downloading includes having Waste on the Waste Conveyance at the Waste Shaft Collar, during movement down the shaft, and at the Waste Shaft Station. The Waste Hoist Brakes shall be Operable if Waste is being uploaded.

5.5.8.2 Surveillance Requirements for the Waste Hoist Brakes

The Waste Hoist Brakes are only required to be Operable as a nuclear safety control during the Downloading of CH and RH Waste. The significant elements of this LCO are the Operability verification of the Waste Hoist Brakes over speed and loss of power signals setting the brakes; the emergency dump valves are operational and set the brakes; the Lilly Controller speed limiting unit (over speed control function of the Lilly Controller) sets the brakes in an over speed condition; and the brake pad thickness and the spring tension are within specified tolerances. To ensure these controls are maintained, surveillances of the Waste Hoist Brake System are performed.

Pre-Operational Test (SR 4.8.1.1)

A Functional Test of the Waste Hoist Brakes is performed to verify the over speed and loss of power signals set the Waste Hoist Brakes and that the emergency dump valves are operational. This Functional Test is completed as part of the Pre-operational test of the Waste Hoist Brakes that is performed once each shift prior to using the Waste Shaft Conveyance for Waste Handling Activities during Downloading. The Functional Test provides assurance that the Waste Hoist Brakes are operational. The Functional Test verifies that the brakes are automatically applied upon loss of electric power, hydraulic pressure, or if the conveyance is in an over speed condition. The over speed control tested during the Functional Test is the Lilly Controller. The Functional Test verifies that the Lilly Controller is operational and will set the brakes in an over speed condition. During the test the conveyance is moving and set to an over speed condition (less than 500 fpm) by the process controller. To support the pre-operational testing, the hoist is positioned on a retard cam and an actual over speed condition is initiated. The over speed condition is performed on the retard cam because the hoist cannot physically be put in a 550 fpm condition without disconnecting various controllers and interlocks. Upon sensing the over speed condition, the Lilly Controller fly-ball governor lifts the link between two contacts. As a highly reliable mechanical system, the Functional Test is sufficient to show that the Lilly Controller will interrupt the electric power to the system by removing the connection between two contacts, and set the brakes in an over speed condition. The actuation of the brakes from this lower speed condition is identical to the system response that would occur in the middle of the shaft where there is no retard cam (i.e., the hoist could be at maximum speed). This is because the Lilly Controller responds the same way for an over speed condition in any section of the shaft. Therefore the trip of the brakes at a lower speed is verification that in any position on the shaft, the brakes can be automatically set. This verifies that the design value of 550 fpm is always satisfied.

A successful over speed test is indicated by illumination of the Brake Set light and verified by the lack of Waste Hoist movement. The Brake Set light will only illuminate if all four brake units function properly and set all four brakes. The over speed test not only verifies the Operability of the Lilly Controller, but

verifies that the brakes will set upon loss of electrical power as the Lilly Controller interrupts the electrical power supply to the control system.

The Functional Test also verifies the Operability of only the emergency dump valves SV-2 and SV-5 by interrupting the electrical supply to the valves and demonstrating that two dump valves alone open to relieve hydraulic pressure and set the brakes. This test verifies that the dump valves function as intended without any reliance upon the other four spool valves. The open emergency dump valve(s) drain the hydraulic fluid back to the reservoir thereby relieving hydraulic pressure on the brake springs, which sets the brakes. The dump valves are verified to be open by visual indication that the non-credited Brake Set light illuminates in approximately 1 second and the non-credited Static Power Convertor Amp meter reaches 2,000 amps. The Functional Test verifies that the valves will fail open on a loss of electrical power from the Lilly Controller or any other mechanism by illuminating the Brake Set light. If the Brake Set light does not illuminate during the Functional Test, the Waste Hoist Brakes are inoperable. Although only required for Waste Downloading operations, verifying Operability of the brakes at least once each shift prior to operation of the conveyance is based on facility operational experience and on UG metal and non-metal mine operational experience.

To ensure the brakes will stop a maximally loaded conveyance, during the pre-operational tests, a 2,000 amp current is applied to the Waste Hoist motor, which is more than 150 percent of the design load, while the brakes are set. The brakes are verified to prevent movement of the hoist against the torque supplied by the motors at this amperage loading and the Brake Set light is also verified to be lit when in this condition. This is not a requirement for the Waste Hoist Brakes to be determined Operable but is an important function that demonstrates the brakes when set will hold against a force that is over 150 percent of the design load of the brakes.

Functional Test of the Lilly Controller (SR 4.8.1.2)

A Functional Test of the Lilly Controller speed limiting unit must be completed at least once per week to verify Operability of the over speed control function of the Lilly Controller. The Functional Test required by this SR, normally completed as a part of the Weekly preventive maintenance of the Lilly Controller, and the preventive maintenance confirm that the Lilly Controller and the fly-ball governors and mechanical linkages are working correctly. Specifically it will verify that the mechanical linkages associated with the governors move freely and will lift the link between two contacts. When the Lilly Controller governor reaches an over speed condition, the mechanical arm moves and lifts the link between two contacts thereby removing electrical power to the system, to include the emergency dump valves, allowing the brakes to set and stop the conveyance movement.

The Lilly Controller and governor Operability is verified by manually lifting the fly-balls on the governors and verifying that the over speed contacts are opened (i.e., connector bar is lifted from the contacts) and the brakes will set. This test is different than the pre-operational functional test in which the hoist conveyance is moving (SR 4.8.1.1), in that in this Weekly test, the conveyance is not moving. Instead the hoist is operated to move the conveyance such that in the first part of the test, the roller is on the retarding cam in the Lilly Controller and the hoist is stopped. The second part of the test requires moving the conveyance to an intermediate point such that the rollers are not on the retarding cam again stopping the hoist. In both locations, the flyball arms on one of the governors are lifted manually to ensure that the governors work correctly and will set the brakes in an over speed condition. One governor is tested at each location so that both governors are tested. Manually lifting the flyballs on the governor allows visual verification that the over speed switch opens (i.e., link between the contacts is physically removed from between the contacts). The Weekly preventive maintenance ensures that the highly reliable mechanical Lilly Controller continues to operate correctly and within the specified parameters. The once

per Week Frequency is based on operating experience and the manufacturer's recommendations. The Weekly Frequency is sufficient to ensure the Lilly Controller and governors are operational and will interrupt the electrical power to the system upon demand.

Verify Brake Pad Thickness and Spring Tension (SR 4.8.1.3)

This surveillance requires that the brake pad thickness and the spring tension are verified to be within specified tolerances to ensure the brakes are Operable. The surveillance is completed on each of the four brake units (eight modules). The brake pads when received from the manufacturer are approximately 1 inch thick. The basis for replacing the pads when they are less than or equal to 0.5 inch thick, is that at less than 0.5 inch thick the pads are not thick enough to ensure proper adjustment of the pad to allow the required piston travel of 0.137 to 0.157 inch. To verify the pads are held firmly against the disc, the brake hydraulic pressure is raised to between 1882 and 1892 psi, and an attempt is made to physically (manually) move the brake pads. If the brake pads do not move, the brake pads are within tolerance, are acceptable, and meet the SR criteria. If the brake pads move, the SR acceptance criteria are not met.

The brake spring force of a minimum of 37,000 pounds is determined by the brake manufacturer (see the Manufacturer's Manual M1128) based on the requirement to stop a maximally loaded conveyance within a travel distance of 30 feet when the brakes are applied. The brake spring force is designed to ensure that any two brake units will stop the conveyance travel. Calculation ETO-H-228, *Evaluation of the Stopping Distance of a Descending Waste Shaft Conveyance Utilizing Two Brake Units*, documents that any two brake units have sufficient spring force to ensure two brake units will stop the conveyance. The current springs, supplied by the brake manufacturer, have a force of at least 37,000 pounds (required for the current brake pad surface area and material type). The brake force cannot be measured directly by WIPP personnel. The force is verified indirectly by a measurement of the caliper piston travel distance, which verifies the springs are in the normal force range. During the monthly preventive maintenance, the movement of each piston is verified (along with the brake pad thickness). If the piston movement measurement is 0.137 to 0.157 inch, the spring force is a minimum of 37,000 pounds and is sufficient to hold the brake pads against the disc and stop the conveyance upon demand. The brake piston travel is measured when the brake hydraulic pressure is in the range of 2002 to 2012 psi.

The Frequency of once per Month is sufficient to verify the brake pad thickness and the spring tension will stop the Waste Conveyance upon demand in all normal and emergency stop conditions. This Frequency is based on operational experience and the manufacturer's recommendations.

5.5.9 Aboveground Liquid-fueled Vehicles/Equipment Prohibition (LCO 3.3.2)

Control Description: Aboveground Liquid-fueled Vehicles/Equipment shall not be present in the CH Bay, Room 108, or Waste Shaft Access Area when CH Waste is present.

The credited safety functions of the Aboveground Liquid-fueled Vehicle/Equipment Prohibition control are as follows:

- To prevent fuel pool fires from affecting CH Waste, liquid-fueled vehicles/equipment are prohibited in the CH Bay, and/or Room 108, thereby reducing the likelihood of a fuel pool fire by the removal of a primary source of liquid-fuel.
- To prevent fuel pool fires from affecting CH Waste, liquid-fueled vehicles/equipment are prohibited in the Waste Shaft Access Area, thereby reducing the likelihood of a fuel pool fire by the removal of a primary source of liquid-fuel.

CH Waste is brought into the CH Bay or Room 108 in a Closed Type B Shipping Package using electric powered vehicles/equipment. A TRUPACT-II or HalfPACT Shipping Package is placed in the TRUDOCK in the CH Bay while the TRUPACT-III is placed in the TRUPACT-III Bolting Station in Room 108. While in the Closed Type B Shipping Packages, the CH Waste is not subject to damage from a fire or impact. The CH Waste is removed from the Closed Type B Shipping Packages in the CH Bay and/or Room 108. From there it is transferred to the Waste Shaft Access Area or temporarily stored in the CH Bay. When no longer in a Closed Type B Shipping Package, the Waste Container may be impacted by fire, and result in release of the radiological material.

The Waste Shaft Access Area is an area in the WHB where Waste is prepared for and moved to the Waste Shaft for transfer to the UG. The area has the ability to be entered from the FCLR, which is used to load RH Waste Containers into the Facility Cask / Light Weight Facility Cask (LWFC), or the CLR for CH Waste activities. The CLR serves as an airlock between the CH Bay and the Waste Shaft Collar Room and contains the Conveyance Loading Car and necessary equipment to load the CH Waste Containers onto the Waste Shaft Conveyance. The CLR can also be entered on the north side of the room through a set of doors (159) that is used by Hoisting and Mining for material handling to and from the UG.

The safety analysis identified fire events that could result from the operation of liquid-fueled vehicles/ equipment in the CH Bay, Room 108 and Waste Shaft Access Area. Liquid-fueled vehicles/equipment present sources of ignition and fuel.

Operating liquid-fueled vehicles/equipment in the CH Bay, Room 108, and/or Waste Shaft Access Area introduces the potential for fuel spills. A fuel pool with an ignition source may result in a fire with a subsequent release of radiological material. The presence of liquid-fueled vehicles/equipment when CH Waste Containers are present does not in and of itself, result in an adverse event. For such an event to occur, a puncture of the fuel tank along with an ignition source would be required. Prohibiting liquid-fueled vehicles/equipment from entering the CH Bay, Room 108, and Waste Shaft Access Area prevents fuel pool fires in these areas.

Assumptions for the analyses included the following:

- CH Waste inside a Closed Type B Shipping Package is protected from involvement in any fire event.
- Site-derived waste in a Closed Waste Container provides the same protection as a CH Waste Container in a fire event.
- The confinement provided by the Facility Cask/Light-Weight Facility Cask (LWFC) mitigates the consequences of any release of the confined RH Waste in any fire event.

Prohibiting the presence of liquid-fueled vehicles/equipment in the CH Bay, Room 108, and the Waste Shaft Access Area is credited with reducing the frequency of fires and vehicle collisions that could result in a pool fire. Per the FHA, the WHB FSS may not fully prevent a vehicle fire from impacting the Waste. Although the WHB FSS (See LCO 3.1.1) and the WHB CVS (LCO 3.2.1) are required to be Operable, additional controls are necessary to protect the CH Waste from a potential liquid-fueled vehicle/ equipment pool fire.

5.5.9.1 Limiting Condition for Operation

The LCO format is used for this SAC because the control is well defined with clear conditions and corrective actions to take if a condition is entered. Also, the conditions are readily surveyed. The

compensatory actions minimize the risk of a liquid-fuel fire during the time compliance with the LCO requirements is being restored. Additionally, other controls (e.g., WHB FSS, FPP) contribute to the reduction of risk.

LCO 3.3.2 requires that Liquid-fueled vehicles/equipment shall not be present in the CH Bay, Room 108, or the Waste Shaft Access Area when CH Waste is present in these areas and not in a Closed Type B Shipping Package.

The presence of liquid-fueled vehicles/equipment in the Process Areas of the CH Bay, Room 108, or the Waste Shaft Access Area has the potential to initiate or be involved in fire and/or collision/impact events. Prohibiting liquid-fueled vehicles/equipment from being present in the CH Bay, Room 108, and/or the Waste Shaft Access Area ensures there is no diesel fuel available for a pool fire when CH Waste is present, and reduces the potential for pool fires that could impact any CH Waste Containers that may be present. CH Waste may be in the CH Bay, Room 108, and the Waste Shaft Access Area in sufficient quantities to adversely affect co-located workers if released due to a fire. Therefore, this LCO is applicable to the CH Bay, Room 108, and the Waste Shaft Access Area.

CH Waste material enters the CH Bay through an air lock. Once in the Bay, material can be transported to TRUDOCKs or Room 108 for inspection and preparation for going to the UG. All CH Waste on the CH Bay side enters into the Waste Shaft Area to be Downloaded to the UG. Vehicles/equipment can enter a separate door in the Waste Shaft Collar Access Area that supports fuel and equipment support for the UG. Because of this potential, the Waste Shaft Collar Access Area is also an applicable Process Area for the LCO.

The LCO is applicable only when CH Waste is present in the applicable Process Areas. This clarification allows liquid-fueled vehicles/equipment to be used to Download equipment, materials and supplies while RH Waste is present in the FCLR. RH Waste in the FCLR is inside the Facility Cask/LWFC, which mitigates the consequences of radiological releases from analyzed events. Liquid-fueled vehicles/ equipment are allowed in the CLR when RH Waste is present in the FCLR because the confinement provided by the Facility Cask/LWFC mitigates the consequences of any release of the confined RH Waste in any fire event.

CH Waste inside an opened Type B Shipping Package or outside the Shipping Package is susceptible to these events. CH Waste outside of a Type B Shipping Package can be in the CH Bay and Room 108, during Waste Handling and Waste Storage Modes. Fires in the applicable Process Areas can impact the CH Waste outside the Type B Shipping Package resulting in the release of radiological material. It is possible for each of the three affected Process Areas to be in different Modes.

Waste is not outside its Shipping Package in the Standby Mode and therefore is not affected by fires during this Mode. Therefore, this LCO is applicable during Waste Handling and Waste Storage Modes in the applicable Process Areas only.

This LCO does not apply to electric vehicles/equipment that may contain hydraulic and lubrication fluids that could be involved in a pool fire since these are high temperature hydraulic fluids, which have a significantly higher flash point than diesel, and without an engine being present, the high temperature ignition source is removed from the event. This vulnerability is mitigated with the SS WHB FSS.

5.5.9.2 Surveillance Requirements for Aboveground Liquid-fueled Vehicle/Equipment Prohibition

The significant element of this LCO SAC is the prevention of liquid-fuel vehicles/equipment from being in these Process Areas while CH Waste is not in a Closed Type B Shipping Package. To ensure this control is maintained, surveillances of the three Process Areas are required.

Liquid-fueled Vehicles/Equipment Control in CH Bay (SR 4.3.2.1)

This SR requires visual verification Each Shift that liquid-fueled vehicles/equipment are not present in the CH Bay. Based on operational experience, a Frequency of Each Shift is sufficient to verify that the vehicles/equipment selected for use during that shift are not liquid-fueled; and to prevent liquid-filled vehicles/equipment from being present when CH Waste is present and is not in a Closed Type B Shipping Package.

Liquid-fueled Vehicles/Equipment Control in Room 108 (SR 4.3.2.2)

This SR requires visual verification Each Shift that liquid-fueled vehicles/equipment are not present in Room 108. Based on operational experience a Frequency of Each Shift is sufficient to verify that the vehicles/equipment selected for use during that shift are not liquid-fueled, and to prevent liquid-filled vehicles/equipment from being present when CH Waste is present and is not in a Closed Type B Shipping Package.

No Liquid-fueled Vehicles/Equipment Control in Waste Shaft Access Area (SR 4.3.2.3)

This SR requires visual verification Each Shift, when CH Waste is present in this Process Area, that liquid-fueled vehicles/equipment are not present in the Waste Shaft Access Area. Based on operational experience, a Frequency of Each Shift is sufficient to verify that the vehicles/equipment selected for use during that shift are not liquid-fueled and to prevent liquid-filled vehicles/equipment from being present when CH Waste is present and is not in a Closed Type B Shipping Package.

5.5.10 Vehicle Equipment Control in the Waste Shaft Access Area of the WHB (LCO 3.3.3) – DELETED

5.5.11 Control of Propane-powered Vehicles/Equipment (LCO 3.3.4) – DELETED

5.5.12 Underground Lube Truck Operations (LCO 3.3.5)

Control Description: A UG Lube Truck shall be prohibited from being within 200 feet of the CH Waste Face in an Active Panel, and prohibited from being within 200 feet of the Waste Shaft Station when CH Waste is present.

The safety function of the Lube Truck Operations control is to prevent a large fuel pool fire within 200 feet of the CH Waste Face in an Active Panel and to prevent a large pool fire within 200 feet of the Waste Shaft Station when CH Waste is present in the Waste Shaft Station, thereby reducing the likelihood of a pool fire by prohibiting the large total fuel source of the UG Lube Truck from entry into these areas.

There are two Lube Trucks that are used in the UG. There is no prohibition against a UG Lube Truck entering an Active Room that only contains RH Waste. This is because the RH Facility Cask/LWFC protects the RH Waste Container from a potential fire until the RH Waste is entombed in the walls. When

the RH Waste is placed in the boreholes, the RH Waste is high enough off the floor and not in a direct line of the fire such that it will not be impacted by a pool fire.

The operation of vehicles and/or equipment at the WIPP UG is required for unloading, transporting, and emplacement of Waste Containers. Additionally, mining equipment and other support vehicles or equipment are used in the UG. These vehicles may require servicing (e.g., lubrication, hydraulic fluid, or diesel fuel) in various areas of the UG. The UG Lube Trucks are required to provide the services for the UG vehicles in areas away from the Maintenance Area or the UG Refueling Area. A Lube Truck has a capacity of greater than 500 gallons of combustible liquids per calculation, *DSA Supporting Calculations, Fuel Spill, HEPA Filter Plugging, and Fire Compartment Over-Pressurization*, WIPP-058. Lube Truck operations present the opportunity for a radiological material release due to vehicle/equipment fires resulting from the presence of combustible liquids and ignition sources, and/or impacts to the Waste Containers.

A Lube Truck may be required in an Active Panel to support operations in the area, although typically a Lube Truck will not be within 200 feet of the CH Waste Face. If a panel has been closed, (i.e., there is a closure (isolation) barrier as described in Chapter 2.0, Section 2.4.4.6 or 2.4.4.6.1), entry into the panel is prevented. Chapter 2.0 verifies that the substantial barrier and isolation bulkhead protect the Waste Face from operational events in the entries such as vehicle collisions and fires. The second barrier described in Chapter 2.0 is a 12-foot-thick block and mortar explosion-isolation wall. Panel closure also prevents events outside the panel from breaching Waste Containers inside the closed panel. The closure (isolation) barriers are substantial and robust barriers that prevent entry into the closed panel, prevent a Lube Truck impact with the Waste Containers, and prevent a fire or combustible liquid spill outside the barriers from impacting the CH Waste in the closed panel. The barrier on the closed panel ensures that the Waste Face is physically at least 200 feet from the drift where the Lube Truck could be located. Based on their construction and the distances from the CH Waste Face, the barriers are qualitatively judged to protect the Waste Face from operational events such as fires and vehicle collisions involving the Lube Truck. Therefore, this LCO does not apply to a closed panel with an installed closure (isolation) barrier.

A Lube Truck may be required to be in the Waste Shaft Station to support operations in this area. To protect the safety analysis, a Lube Truck is not allowed in the Waste Shaft Station when CH Waste is present at the Waste Shaft Station. If CH Waste is not present, a Lube Truck may enter the Waste Shaft Station.

To support the DSA accident analysis, a control is credited with preventing a Lube Truck from being located such that a fire or collision involving a Lube Truck will not impact the CH Waste at the CH Waste Face in an Active Panel, or the Waste Shaft Station. The use of a Lube Truck in the UG is required by the activities at WIPP and no limited set of practical and reliable SSCs is available to prevent a Lube Truck from being within 200 feet of the CH Waste Face in an Active Panel, or within 200 feet of the Waste Shaft Station when CH Waste is present. Therefore, an AC is required to prohibit a Lube Truck from being within 200 feet of the CH Waste Face in an Active Panel, and 200 feet from the Waste Shaft Station when CH Waste is present. The control is designated as a SAC as engineered controls are not available to prevent occurrence of events requiring SS protection.

The control is to prevent a Lube Truck from being in an Active Panel. One, but not the only method to implement the control is for Operations to indicate a demarcation line that is 200 feet from the CH Waste Face. As the Waste Face moves, the demarcation line will be moved. Note that the assumed demarcation line is not the control but implements the control.

When CH Waste is present in the Waste Shaft Station, a Lube Truck is excluded from the Waste Shaft Station by the Lube Truck Exclusion Zone, defined as the Waste Shaft Station and all areas between

Bulkhead 310 and Bulkhead 415. The Lube Truck Exclusion Zone is applicable for this LCO only. This ensures a Lube Truck will be at least 200 feet from the Waste Shaft Station when CH Waste is present in the Waste Shaft Station. To ensure the Lube Truck remains outside the Waste Shaft Station when CH Waste is present, the control will be implemented to prohibit the Lube Truck from being in the Lube Truck Exclusion Zone when CH Waste is present.

WIPP-058, Revision 2, *DSA Supporting Calculations, Fuel Spill, HEPA Filter Plugging, and Compartment Over Pressurization*, concludes that a fuel spill in a 16-foot drift extends approximately 108 feet on either side of the spill. Additionally, a stand-off distance of approximately 8 feet from the edge of the pool is sufficient to maintain the radiant heat flux to less than 15.9 kW/m^2 on the CH Waste Containers. To ensure the total stand-off distance calculated in WIPP-058 is protected, the distance for the safety analysis is conservatively established as 200 feet. Based on this evaluation, CH Waste cannot be affected by a pool fire when protected by the SAC restrictions. By establishing these prohibitions against a Lube Truck being within 200 feet of the CH Waste Face in an Active Panel and the Lube Truck Exclusion Zone when CH Waste is present, the control will prevent a radiological material release that results from a liquid pool fire (combustible liquids released from a Lube Truck) or a fire that involves a Lube Truck. This would prevent the fire associated with the combustible liquids or equipment on a Lube Truck from damaging the CH Waste Containers as the Lube Truck will be kept at least 200 feet from the CH Waste in each affected area. At a distance of 200 feet from the CH Waste Containers in the Waste Face or the Lube Truck Exclusion Zone, the heat flux from a potential pool fire will not cause a seal failure in the Waste Containers, which could result in a loss of radiological material.

There are no SSCs that will prevent a Lube Truck from being in the Waste Shaft Station when CH Waste is present. This SAC prohibits a Lube Truck from being in the Lube Truck Exclusion Zone when CH Waste is present, or being Downloaded. Note that if the UG is still in the Waste Handling Mode and there is no CH Waste in the Lube Truck Exclusion Zone, a Lube Truck can enter the Lube Truck Exclusion Zone or the Waste Shaft Station as CH Waste would not be at risk from a fire involving the Lube Truck or the combustible liquids.

There are no SSCs that will prevent a Lube Truck from being within 200 feet of the CH Waste Face in an Active Panel. As there are no engineered controls to prevent bringing a Lube Truck into the affected areas, and the only prevention is by human actions, there is a small probability that a Lube Truck will be inadvertently positioned within 200 feet of the CH Waste in an Active Panel, or the Lube Truck Exclusion Zone when CH Waste is present.

However, if a Lube Truck is inadvertently introduced into an Active Room or the Lube Truck Exclusion Zone, when CH Waste is present, this in and of itself does not create an adverse event. Other actions would have to occur to have the large pool fire occur. For a pool fire to occur, there would have to be a collision or impact or some other mechanism to cause a leak of the combustible liquids plus an ignition source. Therefore, to remove the potential for and prevent the large pool fire, if a Lube Truck is inadvertently introduced into the Affected Areas; the Lube Truck must be removed on a timely basis to minimize the risk of a fire that could impact the Waste Containers.

If a Lube Truck is inadvertently positioned within 200 feet of the CH Waste Face in an Active Panel, or the Lube Truck Exclusion Zone when CH Waste is present, the risk of a pool fire that could impact the CH Waste is increased. However, it is judged that this risk increase is very small as a Lube Truck will be Attended by an operator and the equipment operator will also be present. For a Lube Truck that is inadvertently positioned within 200 feet of the CH Waste Face in an Active Panel, or the Lube Truck Exclusion Zone when CH Waste is present, it is judged that if the Lube Truck is removed from the Affected Area within four hours, the risk of the CH Waste being impacted from a large pool fire that

originates around or from the Lube Truck is minimized and is an acceptable risk. Therefore, an LCO that initiates removal of a Lube Truck from the affected process area within four hours is appropriate to protect the control's safety function and attributes.

Maintenance activities in the vicinity of the Lube Truck have the potential to initiate a fire event or provide additional fuel to the fire. Maintenance activities include those activities that can increase the potential for a fire near the Waste and include, but are not limited to, the following examples: cutting, grinding, welding, lubricating or fueling vehicles/equipment, painting, mining activities (e.g., bolting), and equipment repair or preventative maintenance. If the Lube Truck will be in the Affected Area longer than four hours (e.g., the Lube Truck is inoperable and unable to be moved quickly), the fire risk to the Lube Truck and the CH Waste must be reduced. This can be accomplished by temporarily ceasing any Maintenance that can provide an ignition source or additional fuel to a fire. Note that Maintenance on the Lube Truck is allowed to start or continue as this may be necessary to return the Lube Truck to an operable condition so it can be removed from the Affected Area.

To ensure the potential impact to the CH Waste is reduced, the CH Waste will be placed in a safe configuration. Additionally, to reduce the MAR that is available to be impacted by a potential fire, operations for loading CH Waste on the Waste Conveyance at the Waste Shaft Collar Room are suspended. These actions limit the amount of Waste (MAR) that can be affected by a fire and ensures the Waste is in the most safe configuration possible.

An UG Lube Truck Operations control is required in Waste Handling and Disposal Modes in the UG.

5.5.12.1 Limiting Condition for Operation

LCO 3.3.5 is required for the UG Lube Trucks to prevent fire events involving the CH Waste Containers in an Active Room or in the Lube Truck Exclusion Zone to prevent a radiological material release.

The requirement of this LCO is that a UG Lube Truck shall not be within 200 feet of the CH Waste Face in an Active Panel, or in the Lube Truck Exclusion Zone when CH Waste is present. The LCO requires that:

An UG Lube Truck shall be prohibited within:

- 200 feet of the CH Waste Face in an Active Panel.
- The Lube Truck Exclusion Zone when CH Waste is present.

Ensuring a Lube Truck is at least 200 feet from the CH Waste Face or not in the Lube Truck Exclusion Zone when CH Waste is present prevents a fire involving a Lube Truck or the combustible liquids on a Lube Truck from impacting the CH Waste Containers. The 200 feet separation distance ensures the heat flux from the fire will not cause a failure of the Waste Container seal and result in a radiological material release.

Although the control intent is to prevent any introduction of a Lube Truck into the Affected Areas, it is possible for an operator to inadvertently introduce a Lube Truck into either area. Therefore, this control is written as an LCO to allow timely removal of a Lube Truck from within 200 feet of the CH Waste Face in an Active Panel, or the Lube Truck Exclusion Zone when CH Waste is present.

5.5.12.2 Surveillance Requirements for Underground Lube Truck Operations

The significant elements of this LCO SAC are the prohibition of a Lube Truck from being within 200 feet of the CH Waste Face in an Active Panel, and from being in the Lube Truck Exclusion Zone when CH Waste is present. To ensure these controls are maintained, surveillances of the Lube Truck operations are required.

UG Lube Truck to be Further than 200 feet from Waste Face (SR 4.3.5.1)

This SR verifies that Once per Lube Truck Entry into an Active Panel a visual observation will confirm that the Lube Truck is greater than 200 feet from the CH Waste Face. There is a potential that a Lube Truck could remain in the Active Panel after a shift is over. This SR shall be completed Each Shift when a Lube Truck is located in or remains in the Active Panel over multiple shifts to verify the Lube Truck is at least 200 feet from the CH Waste Face. The surveillance, performed only when the UG is manned and operational, will ensure each time a Lube Truck enters into the Active Panel or remains in the Active Panel over a shift that a Lube Truck will not be within 200 feet of the CH Waste Face in the Active Panel. Operator training and experience are sufficient to ensure a Lube Truck will not be positioned within 200 feet of the CH Waste Face. The Once per Entry into the Active Panel and the Once per Shift if a Lube Truck remains in the Active Panel over multiple shifts will ensure the operator verifies that a Lube Truck is not within the 200 feet demarcation line from the CH Waste Face, (i.e., the Lube Truck is at least 200 feet from the Waste Face in an Active Panel). This will prevent a fire involving a Lube Truck or the combustible liquids from impacting the CH Waste in the Active Room. The Frequency of Once per Each Entry into the Active Panel and thereafter Once per Shift if a Lube Truck remains in the Active Panel over multiple shifts is adequate based on operator training and experience.

UG Lube Truck Not Present in the Lube Truck Exclusion Zone when CH Waste is Present (SR 4.3.5.2)

This SR verifies that a Lube Truck is not present in the Lube Truck Exclusion Zone Prior to CH Waste entering the Lube Truck Exclusion Zone. This SR will visually verify that a Lube Truck is not in the Lube Truck Exclusion Zone. This ensures that a Lube Truck will be at least 200 feet from Waste Shaft Station when CH Waste is present in, or being brought into the Waste Shaft Station. The surveillance will be performed Prior to CH Waste entering the Lube Truck Exclusion Zone via either downloading from the Waste Shaft Collar or uploading CH Waste. Performance of the surveillance Prior to these activities will allow a Lube Truck into the Lube Truck Exclusion Zone to support operations if there is no CH Waste present in or being introduced into the Lube Truck Exclusion Zone. As a Lube Truck can enter into the Lube Truck Exclusion Zone when the UG is in the Waste Handling Mode, there is a requirement to ensure a Lube Truck will not be in the Lube Truck Exclusion Zone when CH Waste is being brought to or into the Lube Truck Exclusion Zone. Ensuring the Lube Truck is not in the Lube Truck Exclusion Zone protects the requirement to prevent the Lube Truck from being within 200 feet of the Waste Shaft Station when CH Waste is present. The verification Prior to Waste entering the Lube Truck Exclusion Zone that a Lube Truck is not in the Lube Truck Exclusion Zone, is sufficient to ensure a fire involving a Lube Truck, or the combustible liquids on a Lube Truck that could impact the CH Waste is prevented. The Frequency Prior to Waste entering the Lube Truck Exclusion Zone has been determined to be adequate based on operational experience.

5.5.13 Vehicles/Equipment (LCO 3.3.8)

This Control merges three Controls from Chapter 4.0 (4.5.2, “Limit of Two Liquid-fueled Vehicles/ Equipment within 25 feet of CH Waste Face,” 4.5.3, “Attendance of Liquid-fueled Vehicles/Equipment in

the UG," and "Attendance of Vehicles/Equipment in the RH Bay) in support of Operations to improve implementation.

Control Description: Vehicles/equipment shall be controlled as follows:

Liquid fueled vehicles/equipment:

- Attended in the Waste Shaft Station when transporting CH Waste to or from the VEZ.
- Attended when transporting CH Waste between the VEZ and the CH Waste Face.
- Attended when less than 25 feet from the CH Waste Face.
- No more than two liquid-fueled vehicles/equipment within 25 feet of the CH Waste Face.

Vehicles/equipment with liquid-combustible capacity greater than or equal to 25 gallons:

- Attended in the RH Bay when CH Waste is present in the CH Bay.

The safety function of the control for UG liquid-fueled vehicles/equipment within 25 feet of the CH Waste Face control is to prevent vehicle/equipment pool fires involving CH Waste Containers by limiting the number of liquid-fueled vehicles/equipment near the CH Waste Face, thereby reducing the likelihood for pool fires due to vehicular collisions; and the control for Attendance of liquid-fueled vehicles/equipment in proximity to CH Waste Containers in the UG to prevent vehicle/equipment fires involving CH Waste Containers by assuring personnel are observant of the activities and can readily respond to upset conditions to reduce the likelihood for pool fires, and to alert UG facility workers of conditions potentially requiring their evacuation in order to reduce their consequences.

The safety function of the control for Attendance of vehicles/equipment with liquid-combustible capacity in the RH Bay is to prevent pool fires that could potentially degrade WHB structural steel columns resulting in a building collapse and release of radiological material from CH Waste Containers in the WHB by assuring personnel are observant of the activities and can readily respond to upset conditions to reduce the likelihood for pool fires.

The Attendant is responsible for two basic functions. One function (referred to in DSA Chapter 3.0 as "Spotter") is preventive in nature and includes the responsibilities of recognizing potential collision risks and vehicle/equipment anomalies or malfunctions that could result in a fire and taking appropriate action, including alerting the vehicle/equipment operator. The other function (referred to in DSA Chapter 3.0 as "Notification") is mitigative in nature and includes the responsibilities of making appropriate notifications to the CMR. Liquid-fueled vehicles/equipment are required to perform various activities in the UG. Activities may include hauling or moving mined salt, bolting for ground control purposes, bulkhead installation and removal, servicing of equipment and Waste movement. Vehicles/equipment with liquid-combustible capacity greater than or equal to 25 gallons are required to perform various activities in the RH Bay. These activities must be controlled to reduce the likelihood of collision events. Collision events can result in pool fires. The impacts or fires may breach the Waste Container(s), leading to a loss of confinement and a release of radiological material in the UG or the WHB.

To reduce the likelihood and consequences of pool fires caused by collision events, liquid fueled vehicles/equipment operating in the UG must be controlled by limiting the number of liquid-fueled vehicles within 25 feet of a Waste Face.

5.5.13.1 Limiting Condition for Operation

The LCO format is used for this SAC because the control is well defined with clear conditions and corrective actions to take if a condition is entered. Also, the conditions are readily surveyed. The compensatory actions minimize the risk of a pool fire during the time compliance with the LCO requirements is being restored. Additionally, other controls (e.g., Vehicle FSS, FPP) contribute to the reduction of risk.

This LCO requires that vehicles/equipment shall be controlled as follows:

Liquid fueled vehicles/equipment:

- Attended in the Waste Shaft Station when transporting CH Waste to or from the VEZ.
- Attended when transporting CH Waste between the VEZ and the CH Waste Face.
- Attended when less than 25 feet from the CH Waste Face.
- No more than two liquid-fueled vehicles/equipment within 25 feet of the CH Waste Face.

Vehicles/equipment with liquid-combustible capacity greater than or equal to 25 gallons:

- Attended in the RH Bay when CH Waste is present in the CH Bay.

In the above situations when an Attendant is required, each vehicle/equipment that is not in a safe configuration (e.g., does not have its parking brake set and engine turned off) shall have one dedicated Attendant. When a vehicle/equipment that requires an Attendant passes or moves within 25 feet of one or more liquid-fueled vehicles/equipment that are in a safe configuration, the dedicated Attendant of the liquid-fueled vehicles/equipment with its engine running may also act as the Attendant of the liquid-fueled vehicles/equipment that are in a safe configuration in these situations. An Attendant shall not Attend more than one vehicle/equipment that has its engine running.

To protect against a fire in the UG involving CH Waste, liquid-fueled vehicles/equipment shall be Attended when moving CH Waste or near enough to CH Waste that a fire at the vehicles/equipment could cause a release of radioactive material. This is achieved by the first four bulleted controls listed in the LCO.

To protect against a pool fire in the RH Bay that affects CH Waste due to the weakening of WHB structural steel columns, vehicles/equipment with liquid-combustible capacity greater than or equal to 25 gallons shall be Attended in the RH Bay when CH Waste is present in the CH Bay. This is achieved by the fifth bulleted control listed in the LCO.

The first bullet states that liquid-fueled vehicles/equipment in the Waste Shaft Station shall be Attended when transporting CH Waste to or from the VEZ. Once the CH Waste is in the VEZ, it is Attended per SAC 5.5.4. The “transporting” process includes the entire time, including periods of time that the vehicle/equipment is not moving, required for the CH Waste to be moved between the Waste Shaft Conveyance to the VEZ. This ensures the liquid-fueled vehicles/equipment transporting CH Waste are continuously Attended in the Waste Shaft Station.

The second bullet states that liquid-fueled vehicles/equipment shall be Attended when transporting CH Waste between the VEZ and the CH Waste Face.

The third bullet states that liquid-fueled vehicles/equipment shall be Attended when less than 25 feet from the CH Waste Face. Attendance of liquid-fueled vehicles/equipment within 25 feet of the CH Waste Face reduces the probability of collisions that may result in a pool fire.

When vehicles/equipment are Attended, the risk of pool fires affecting Waste is reduced. This control ensures liquid-fueled vehicles/equipment are Attended when within 25 feet of the Waste Face.

The fourth bullet states that no more than two liquid-fueled vehicles/equipment shall be present within 25 feet of the CH Waste Face. Limiting the number of liquid-fueled vehicles/equipment within 25 feet of the CH Waste Face to no more than two prevents excessive vehicle/equipment congestion in this limited area, thus, reducing the probability of collisions that may result in a pool fire. If more than two vehicles/ equipment, even if Attended, are within 25 feet of a CH Waste Face, there is an increased likelihood of a collision with pool fire that could breach a Waste Container resulting in a radioactive material release.

The fifth bullet states that vehicles/equipment with liquid-combustible capacity greater than or equal to 25 gallons in the RH Bay shall be Attended when CH Waste is present in the CH Bay. If CH Waste is present in the CH Bay, the potential exists for a pool fire in the RH Bay to weaken the structural steel columns of the WHB causing building collapse resulting in a release of radioactive material from CH Waste present in the CH Bay. The probability of a pool fire in the RH Bay is reduced by Attendance of the vehicles/equipment with liquid-combustible capacity greater than or equal to 25 gallons in the RH Bay. Vehicles/equipment that are emptied of combustible liquids to a residual level do not require an Attendant when in the RH Bay or CLR.

Waste is present in the UG during Waste Handling Mode and Disposal Mode. Waste may be present in the CH Bay during Waste Handling Mode and Waste Storage Mode. Therefore, these controls must apply in Waste Handling Mode, Waste Storage Mode, and Disposal Mode to protect Waste.

This LCO applies to the UG and the CH Bay because these areas contain CH Waste that could be impacted by a pool fire.

5.5.13.2 Surveillance Requirements for the Vehicles/Equipment

The significant elements of this LCO SAC are the Attendance and control of vehicles/equipment in these Process Areas while CH Waste is present. To ensure these controls are maintained, surveillances of the UG are required.

Attendance in the Waste Shaft Station (SR 4.3.8.1)

This SR requires verification be made Prior to CH Waste entering the Waste Shaft Station that the required Attendant(s) be present for liquid-fueled vehicles/equipment in the Waste Shaft Station when transporting CH Waste to or from the VEZ. The Frequency of “Prior to CH Waste entering the Waste Shaft Station” requires an Attendant to be present before the CH Waste is moved onto the Waste Shaft Conveyance to Download or, if returning Waste to the surface, Prior to entering the Waste Shaft Station from the termination of the VEZ, thus Ensuring the liquid-fueled vehicles/equipment is Attended in compliance with this LCO requirement.

Attendance between the VEZ and CH Waste Face (SR 4.3.8.2)

This SR requires verification be made Prior to termination of the VEZ when moving CH Waste to the Waste Face, that the required Attendant(s) be present for liquid-fueled vehicles/equipment when transporting CH Waste between the VEZ and the CH Waste Face. The Frequency of “Prior to termination

of the VEZ" when moving CH Waste to the Waste Face requires an Attendant to be present before termination of the VEZ containing the CH Waste, thus ensuring the liquid-fueled vehicles/equipment transporting the CH Waste is Attended in compliance with this LCO requirement. When a situation arises that results in a decision to return the Waste to the surface, the vehicle/equipment must continue to be Attended from the time the decision is made to return the Waste to the surface until the start of the VEZ that will return the Waste to the Waste Shaft Station.

Attendance within 25 feet of the CH Waste Face (SR 4.3.8.3)

This SR requires verification be made Each Shift, while the UG is manned, that liquid-fueled vehicles/ equipment are Attended when less than 25 feet from the CH Waste Face. Based on operational experience a Frequency of Each Shift while the UG is manned is sufficient to ensure compliance with this LCO requirement. This SR is not required when the UG is not manned.

Vehicles/Equipment Limit within 25 feet of the CH Waste Face (SR 4.3.8.4)

This SR requires verification be made Each Shift while the UG is manned that no more than two liquid-fueled vehicles/equipment are within 25 feet of the CH Waste Face. Based on operational experience, a Frequency of Each Shift while the UG is manned is sufficient to ensure compliance with this LCO requirement. This SR is not required when the UG is not manned.

Attendance in the RH Bay (SR 4.3.8.5)

This SR requires verification be made that the required Attendant(s) be present for vehicles/equipment with liquid-combustible capacity greater than or equal to 25 gallons in the RH Bay. This verification shall be performed prior to vehicles/equipment with liquid-combustible capacity greater than or equal to 25 gallons entering the RH Bay when CH Waste is present in the CH Bay. This conditional surveillance Frequency requires an Attendant to be present before the vehicles/equipment with liquid-combustible capacity greater than or equal to 25 gallons enters the RH Bay. Additionally, this verification shall be performed Each Shift when CH Waste is present in the CH Bay to ensure proper shift turn over for the required Attendant(s).

5.5.14 Attendance of Area ≤ 25 feet of Contact-Handled Waste Containers when Vehicle/Equipment are Present (LCO 3.3.9) – DELETED

5.5.15 Fuel Confinement in the RH Bay (LCO 3.4.1) – DELETED

5.5.16 Fuel Barrier in the Underground (LCO 3.4.2) – DELETED

5.5.17 Contact-Handled Waste Handling (LCO 3.5.1) – DELETED

5.5.18 Waste Conveyance Operations (LCO 3.5.2 moved to DA SAC 5.5.6)

5.5.19 Waste Handling in the Outside Area (LCO 3.5.3) – DELETED

5.5.20 WIPP Waste Acceptability Control (LCO 3.7.1)

Control Description: TRU Waste Containers shall be compliant with the WIPP Waste Acceptance Criteria (WIPP WAC).

The safety function of Waste Acceptability Control is to protect the assumptions of the safety analysis as to the nature, quantity, and confinement of TRU Waste shipped to WIPP.

The WIPP WAC is credited as an IC in the hazard analysis and is applicable to all Waste received at WIPP. The WIPP WAC provides assurance that Waste meets specific criteria for the containers in which it is packaged as well as the inventory of each package, which reduces both the likelihood and consequences of adverse events. The allowed forms of packaging provide resistance to breach from adverse events (e.g., impacts, package compatibility with the Waste, package integrity at increased temperature). Prohibiting incompatible and reactive materials reduces the likelihood of ignition sources (e.g., pyrophorics, oxidizers, water reactive chemicals, exothermic chemical reactions). Limiting flammable gas and volatile organic compound (VOC) concentrations in the innermost confinement layer reduces the likelihood of formation of combustible or flammable atmospheres within each Container. Limiting curie content protects assumptions regarding the quantity of radiological material involved in an event and therefore, the consequences of such events.

WIPP WAC requirements include controls on content, form, and packaging of Waste to prevent internal fires, deflagrations/explosions, and chemical reactions that can breach the confinement of the Waste Container. The WIPP WAC excludes shipments of waste streams packaged in (POCs) that contain combustibles. The compliant forms of packaging provide resistance to a breach from adverse events (e.g., impacts, package incompatibility with the Waste, and challenges to package integrity at increased temperature).

As Waste Containers are not opened at WIPP, the WIPP WAC is imposed on the Waste generators. The National TRU Program (NTP) Certification/Recertification Program and the Nuclear Waste Partnership LLC (NWP) Generator Site Technical Reviews, supported by Interface Agreements between NWP and the generator sites, are tasked with determining that a generator site has the necessary and sufficient processes and procedures in place to assemble Acceptable Knowledge information into a record that supports WIPP acceptance of Waste Containers and that the generator site is maintaining and executing those procedures and processes. The Central Characterization Program is tasked with characterizing TRU Waste on behalf of the Waste generator sites, which do not have certified characterization programs of their own to obtain information to demonstrate compliance with the WIPP WAC before Waste Containers have been certified for disposal at the WIPP. Characterization at the generator sites includes compilation of Acceptable Knowledge into an auditable record, radiography and/or visual examination, flammable gas analysis, and non-destructive assay and/or radiochemistry. This work is conducted in accordance with the Carlsbad Field Office (CBFO), *Quality Assurance Program Document* (QAPD), the *WIPP Quality Assurance Program Description* (WP 13-1), and the *CCP Transuranic Waste Characterization Quality Assurance Project Plan* (CCP-PO-001) [or equivalent approved plan if the Central Characterization Program does not perform the work].Waste is certified prior to its shipping to WIPP from the generator sites and is documented in its shipping manifest.

Waste Acceptability Control evaluates all shipments of Waste to WIPP through comparison of shipping labels and manifests to Waste documentation generated by the WIPP Waste Data System (WDS) as meeting WAC requirements. Additionally, whenever potentially noncompliant TRU Waste Containers are identified, either at WIPP or by a generator site, the Waste location and configuration (e.g., in a Closed Shipping Package, in the Waste Handling process, or disposed) at the WIPP facility is determined and the Waste either dispositioned or has a Response Plan developed and approved.

This DSA analyzes events involving WIPP WAC noncompliances with the potential to pose risk to the public and/or workers. These events include container degradation, internal fires, over-pressurizations and deflagrations. Once the certified Waste Container leaves the generator site, Waste Acceptability Control

is considered to be a preventive control to identify and isolate potential noncompliant container(s) at WIPP, prior to an event occurring.

Waste Acceptability Control evaluates any identified Waste Container's relevant noncompliance with the WIPP WAC (DOE/WIPP 02-3122) as an "as-found condition" in accordance with the WIPP Unreviewed Safety Question (USQ) process, which includes the declaration of a Potentially Inadequate Safety Analyses (PISA) if it is determined that the noncompliance can develop into an event not previously evaluated in the safety analysis.

5.5.20.1 Limiting Condition for Operation

LCO 3.7.1 states the following:

- Waste Containers shall be compliant with the WIPP WAC.

This LCO ensures the requirements for receiving and disposing of TRU WASTE at the WIPP are satisfied. Chapter 3.0 assumes that TRU Waste transported to WIPP is in compliance with the requirements in the DOE-approved WIPP WAC. LCO 3.7.1 defines the Actions to evaluate and respond to a Waste Container suspected to be noncompliant with the WIPP WAC.

The hazard analysis (WIPP-021, *Hazards Analysis for the Waste Isolation Pilot Plant Transuranic Waste Handling Safety Basis*) credits the WAC requirements as ICs or the starting point for postulating hazardous events.

The actual Waste Container contents cannot be verified at WIPP. Upon receipt of Waste at WIPP a comparison of the shipping manifests and the WIPP WDS is performed. The WIPP facility does not accept Waste Container shipments for disposal if the Waste Container information has not been submitted into the WDS and approved by the WDS Data Administrator. The process for submitting Waste information into the WDS is described in the User's Manual (DOE/WIPP 09-3427, *Waste Data System User's Manual*). After Waste is received and manifests verified at WIPP, the Type B Shipping Packages are unloaded; Waste Containers are removed from their Type B Shipping Packages; and moved to the UG for disposal. Waste Containers are not opened at WIPP. Therefore, Waste characteristics are the basis for the analysis of all event types that may occur.

LCO 3.7.1 requires that TRU Waste be compliant with the WIPP WAC prior to acceptance at WIPP. This is implemented by the SRs to verify that the Shipping Manifest is compliant with the WIPP WDS at the time the TRU Waste is received at the WIPP gatehouse.

A TRU Waste generator site could discover that a mischaracterized Waste Container was inadvertently shipped to WIPP. If this happens, the generator site is required to notify WIPP of the condition.

WIPP may identify discrepancies in the shipper paperwork and the certification data that may indicate that a suspect Waste Container was received at WIPP.

Waste Container integrity issues may be discovered during or after Waste Container receipt, processing, and disposal by WIPP. WIPP is then responsible for determining the location of that Waste Container and ensuring the safety of personnel and environment until such time as the final disposition of the subject container can be determined.

The Actions associated with the LCO provide for a disciplined response in the event that a suspect Waste Container is identified.

Entry into the LCO does not replace or circumvent the USQ process for determining if a PISA exists. A suspect noncompliant determination requires entry into the LCO. Independently the USQ process and PISA evaluation is determined. The safety analysis evaluates deflagrations/over-pressurizations in bounding events and prescribes controls. Indication of pressurization may not result in a PISA.

Waste Acceptability Control is required in all Modes at all times and applies to all areas where Waste is managed after acceptance at WIPP including the CH Bay, Room 108, RH Bay, Hot Cell Complex (CUR, and Transfer Cell), Waste Shaft Access Area, UG, and Outside Area.

5.5.20.2 Surveillance Requirements for WIPP Waste Acceptability Control (SR 4.7.1)

Shipping Documentation Review (SR 4.7.1.1)

SR 4.7.1.1 verifies that the Shipping Manifest is compliant with the WIPP WDS. Upon receipt, each Shipping Package's manifest shall be inspected to verify that data matches the WDS data entries. Agreement with this comparison allows the shipment to be accepted.

Waste Container Integrity/Contamination Inspection (4.7.1.2)

SR 4.7.1.2 verifies that there is no obvious damage or degradation to any of the Waste Container(s) resulting in its non-compliance with the WIPP WAC. Obviously degraded means clearly visible and potentially significant defects in the Container or Container surface. This determination is made by visual inspection of accessible areas of the Waste Containers.

After the Type B Shipping Package is taken to the WHB and opened, the Waste Containers comprising the payload are removed from the Shipping Package and inspected for damage, discoloration, and/or contamination, which could be signs of WAC non-compliance. The following elements are observed:

- Rust or corrosion is assessed in terms of its type, extent, and location. Pitting, pocking, flaking, or dark coloration characterizes potentially significant rust or corrosion. This includes the extent of the Waste Container surface area covered, thickness, and if it occurs in large flakes or built-up (caked) areas. Rusted containers may not be accepted if rust is present in caked layers or deposits, or rust is present in the form of deep metal flaking, or built-up areas of corrosion products. Wall thinning, pin holes, and breaches can be a result of rust/corrosion.

  In addition, the location of rust should be evaluated for noncompliance; for example on a drum: top lid; filter region; locking chine; top one-third, above the second rolling hoop; middle one-third, between the first and second rolling hoops; bottom one-third, below the second rolling hoop; and on the bottom.

  Waste Container(s) may still be considered acceptable if the signs of rust show up as some discoloration on the container, or if rubbed would produce fine grit or dust or minor flaking (such that wall thinning does not occur).

- Waste Container(s) with obvious leaks, holes or openings, cracks, deep crevices, creases, tears, broken welds, sharp edges or pits, are either breached or on the verge of being breached are considered WAC noncompliant. Warpage that could cause the container to be unstable or prevent it from fitting properly on the metal pallet are considered noncompliant.

- Visible parts of the fastener and fastener ring (chine), if applicable, are assessed for damage or excessive corrosion. Alignment of the fastener is observed to the extent possible to ensure that it is in firm contact around the entire lid and the container will not open during transport.

- Deep gouges, scratches, or abrasions over wide areas are not acceptable. If top and bottom surfaces are not parallel, this would indicate that the container is warped. Dents should be less than 1/4 inch deep by 3 inches long and between 1/2 inch and 6 inches wide. All other dents must be examined to determine impact of structural integrity.
- Discoloration would indicate leakage or other evidence of leakage of material from the Waste Container(s). Containers with evidence of leakage near vents, top lid fittings, bottom fittings, welds, seams, and intersections of one or more metal sheets or plates must be considered noncompliant.
- Outer containers that have visible and accessible vent ports and/or filter(s), (e.g., standard waste box (SWB), ten-drum overpack (TDOP), and SLB2) will be inspected for obvious damage, pluggage/blockage/obstruction to vent ports and/or filter(s). Inspection will also ensure a minimum vent/filter(s) appear open for venting.
- No radiological contamination or direct radiation exposure exceeding the Radiological Work Permit limits of accessible areas of the Shipping Package or Waste Container(s) surfaces is acceptable.

Waste Container Pressurization Inspection (4.7.1.3)

SR 4.7.1.3 determines if there is evidence that the Waste Container(s) has been or is pressurized. Pressurization can be indicated by a fairly uniform expansion of the sidewalls, bottom, or top (bulging). Past pressurization can be indicated by a notable outward deflection of the bottom or top or material discharge from the lid.

After the Type B Shipping Package is taken to the WHB and opened, the Waste Containers comprising the payload are removed from the Shipping Package, and accessible surfaces are inspected for deformations indicative of current or past container pressurization. This inspection occurs at the same time as the 4.7.1.2 inspection. Indications such as warping of surfaces, fairly uniform expansion of the sidewalls, bottom or top, notable outward deflection of the bottom or top, and/or material discharge from the container are symptomatic of over-pressurization. Over-pressurization might indicate an ongoing reactive event within the container or a symptom of previous generation of a reactive gas within the container.

A bulging Waste Container(s) is WAC noncompliant. In the case of a drum, bulging is indicated by:

- A fairly uniform expansion of the sidewalls, bottom, or top either the top or bottom surface protrudes beyond the planar surface of the top or bottom ring.
- A protrusion of the side wall beyond a line connecting the peaks of the surrounding rolling hoops or a line between a surrounding rolling hoop and the bottom or top ring.
- Expansion of the sidewall such that it deforms any portion of a rolling hoop.

Waste Container Identification Number Observation (4.7.1.4)

SR 4.7.1.4 requires that for any Waste Container with an observable identification label, a visual observation shall be completed of the label and the identification number on the label compared to the WIPP WDS. This will ensure that the containers received are the correct ones as identified in the WIPP WDS or are suspect containers that do not agree with the WIPP WDS. The observation of the identification label will be completed after the Waste Containers are removed from the Shipping Package and the inspections required by SRs 4.7.1.2 and 4.7.1.3 are completed. The identification can only be

completed after the container is removed from the Shipping Package as the identification label typically cannot be seen when the containers are in the Shipping Package. Failure to complete this SR or if the identification label information does not match the WIPP WDS requires entry into Condition D.

5.6 ADMINISTRATIVE CONTROLS

ACs are provisions relating to organization and management, procedures, record keeping, assessment, and reporting necessary to ensure safe operation of a facility. Two types of ACs are used in nuclear facilities. The first type is termed SAC, which is an AC needed to prevent or mitigate an accident scenario; and the second type is termed Programmatic Administrative Control that commits the facility operator to establish, maintain, and implement one or more elements of a SMP.

The functions of Programmatic Administrative Controls and SACs are as follows:

- Programmatic Administrative Controls are designed to provide broad programmatic support for SMPs supporting defense-in-depth or worker safety.
- SACs provide specific preventive or mitigative functions for accident scenarios identified in Chapter 3.0, where the safety function has importance similar to, or the same as, the safety function of a safety SSC.

5.6.1 Programmatic Administrative Controls

Programmatic Administrative Controls represent commitments to establish, implement, and maintain SMPs that are required to support WIPP operations and are described below. These requirements are not specifically credited in the Hazard and Accident Analysis but are important contributors to defense-in-depth. In general, Programmatic Administrative Controls provide broad programmatic support for SMPs defense-in-depth and worker safety. ACs supporting effective safety administration include topics, such as: contractor organization and management, procedures, reviews, audits, record keeping, facility staff qualification and training, operating support, and TSR violations. These topics are discussed in the TSR. Minimum Operations Shift Complement/requirements are discussed below.

Minimum Operations Shift Complement

The available number of managers and operators with qualifications conforming to the requirements of DOE O 426.2 shall be adequate to safely operate and support WIPP activities. Personnel fulfilling the Facility Shift Manager (FSM) and CMR Operator positions will meet the qualification requirements for those positions. Abnormal conditions shall be considered in determining operator assignments. Management shall provide additional personnel, as necessary, to support other activities.

The minimum operations shift complement per shift for WIPP shall be one FSM, one CMR Operator, and one Facility Operations Roving Watch. The safety function for the FSM is to provide facility command and control. The CMR Operator provides continuous monitoring of facility conditions in the CMR (i.e., monitoring and responding to alarms and indications, and communication with Attendants). The Facility Operation Roving Watch provides the capability to meet, in a timely fashion, any Action Statement required by the TSR. Shaft Tenders shall be present when moving Waste in the Waste Shaft Collar and Waste Shaft Station to support 5.6.2.6 Waste Conveyance Operations (SAC 5.5.6).

The supervisor availability will be described in facility procedures.

During a shift, to accommodate unexpected absences of on-duty shift crew members, the shift crew composition may be one less than the minimum requirements for not more than 2 hours, provided immediate action is taken to restore the shift crew composition to within the minimum requirements. This provision is not applicable at the time of shift turnover.

Control of Working Hours

NWP administrative procedures shall limit the working hours of staff who perform safety-related functions.

5.6.2 Specific Administrative Controls

SACs provide a safety function equivalent to engineered controls that would be classified as SC or SS. Several of the SACs credited in this DSA were developed in the directed action format, provided below. The remaining SACs have been developed in the LCO format to facilitate consistent implementation. Each SAC describes the rationale for the TSR and the specific actions related to the accident scenarios.

5.6.2.1 Pre-Operational Checks of Vehicle(s)/Equipment in Proximity to Contact-Handled Waste (SAC 5.5.1)

Control Description: Prior to Use, Vehicle(s)/Equipment to be operated within 25 feet of the CH Waste Face, in the Vehicle Exclusion Zone, or in the Waste Shaft Station when CH Waste is present, shall be inspected for the following attributes:

- Brake operation, as applicable.
- Steering, as applicable.
- No excessive leaks.
- Operating lights and horn, as applicable.
- Fluid levels are within operating range, as applicable.
- Cleanliness.

The operation of vehicles and/or equipment at WIPP is required for transporting and emplacement / retrieval of TRU Waste Containers as well as supporting UG maintenance activities. These operations present the opportunity for radiological material release from vehicle/equipment fires resulting from the exposure to liquid-combustibles and ignition sources.

The safety function of the Pre-Operational Checks of Vehicle(s)/Equipment in proximity to CH Waste is to prevent vehicle/equipment pool fires involving CH Waste Containers by ensuring vehicles/equipment operating near CH Waste are checked for such conditions as braking, steering, leaks, and cleanliness prior to being permitted to operate near CH Waste to reduce the likelihood of pool fire formation due to leaks and/or collisions.

Since CH Waste is vulnerable to collisions and fires, controls are required to reduce the risk. ACs are required to reduce the likelihood of occurrence, and the pre-operational checks control is designated as a SAC, since engineered controls are not available to prevent occurrence of events requiring SS protection.

This SAC is accomplished by verifying that Vehicle(s)/Equipment to be operated within 25 feet of the CH Waste Face, in the Vehicle Exclusion Zone, or in the Waste Shaft Station when CH Waste is present,

are checked for such conditions as braking, steering, lights and horn, leaks, and cleanliness prior to being permitted to operate near CH Waste. If a vehicle would require repair or removal, this task may be performed per LCO 3.3.8 requirements that require Attendance and liquid fueled vehicles/equipment requirements.

A pre-operational check verifies functionality of Vehicle(s)/Equipment to be operated within 25 feet of the CH Waste Face, in the Vehicle Exclusion Zone, or in the Waste Shaft Station when CH Waste is present. The check shall be performed to:

- Demonstrate adequate brake operation, as applicable, by driving the vehicle and bringing the vehicle to a stop with braking system. This is a qualitative verification that is performed by the operator. Experience and knowledge of the vehicle are critical in making this Operability determination.
- Demonstrate adequate steering operation, as applicable, (demonstrated by turning the steering wheel both to left and right and verifying proper response). This is a qualitative verification that is performed by the operator. Experience and knowledge of the vehicle are critical in making this Operability determination.
- Verify no excessive fluid leaks, as applicable, as indicated by visible flow of fluid under pressure, puddles beneath the equipment, or abnormal loss of hydraulic fluid (e.g., battery compartment, hydraulic lines and fuel lines).
- The seals on hydraulic actuators are designed to prevent excessive leakage around pistons; however, they are also intended to have a controlled seepage of oil, which lubricates the seal and prevents binding between the seal and the shaft of the ram. The presence of moisture drops of hydraulic fluid near the seal is normal and desirable. The seepage is not a problem unless it becomes excessive and results in puddles of hydraulic fluid below the equipment.
- Demonstrate lights (e.g., headlights, brake lights, rear and/or back-up lights) and horn operate, as applicable (verify lights and horn operate when actuated).
- Verify fluid levels are within operating range, as applicable (e.g., engine oil, transmission fluid, hydraulic fluid and brake fluid).
- Verify acceptable cleanliness [minimal accumulation of oils/greases (visible oil sheen, no accumulation of moisture, no visible droplet accumulation, except for around a seal as described above)] at locations around critical components (e.g., FSS nozzles, engine compartment, braking system, hydraulic lines, etc.).

The term “as applicable” is necessary as some vehicles/equipment may not have each feature and therefore, the feature would not be available to test. For instance, the roof bolter does not have a horn and therefore, testing the horn would not apply.

The verification of the above checks is not required to be performed in any order.

A pre-operational check of vehicles/equipment Prior to Use will provide assurance that the vehicle and/or equipment is operating properly and has no obvious signs of degradation that could lead to its malfunction. Prior to Use on the shift the equipment selected for use will be evaluated per procedure for Operability characteristics and documented in the equipment log book. This verification is performed before the equipment is declared ready for use. The Frequency of Prior to Use is based on operational experience, which shows this is sufficient to ensure vehicle/equipment Operability near the CH Waste Containers. These attributes slowly degrade over time and the instantaneous failure of liquid fueled

systems would be noted by leaks and level checks. As such, these attributes are not expected to fail during the shift without being noticed by the operators.

5.6.2.2 Waste Handling Program – Pre-operational Inspections of Surface Waste Handling Vehicle/Equipment (SAC 5.5.2) – DELETED

5.6.2.3 Transuranic Waste Outside the Waste Handling Building (SAC 5.5.3)

Control Description: Waste, excluding site-derived Waste, in the Outside Area shall be in Closed Type B Shipping Packages.

The TRU Waste in the Outside Area control is established to ensure that TRU Waste Containers are protected from adverse events when located aboveground and outside the WHB. This control is accomplished by verifying that TRU Waste (excluding site-derived TRU Waste), aboveground and outside of the WHB, is contained in a Closed Type B Shipping Package. Since Waste is vulnerable while in the Outside Area, controls are required to reduce the risk. Therefore, ACs are required to reduce the likelihood of occurrence, and the TRU Waste Outside the WHB control is designated as a SAC since engineered controls are not available to prevent occurrence of events requiring SS protection.

The safety function of the TRU Waste Outside the WHB control is to prevent release of radiological material due to fires, explosions, collisions, and/or NPH events when TRU Waste (excluding site-derived TRU Waste) is located outside of the WHB (e.g., in the Outside Area) by reducing the likelihood for TRU Waste Containers to not be protected by a Type B Shipping Package when outside of the WHB.

Type B Shipping Packages are credited as an IC in the hazards analysis when TRU Waste is in a Closed Type B Shipping Package. The WIPP WAC requires the TRU Waste received at WIPP to be in a Type B Shipping Package. This confinement prevents release of radiological material due to fires, explosions, collisions, and/or NPH events when TRU Waste (excluding site-derived TRU Waste) is located outside the WHB.

Type B Shipping Packages are not specifically designed nor constructed for mitigation of explosions from internal or external sources. However, the Type B Shipping Package is qualitatively judged due to its robust construction, to maintain confinement integrity when subjected to internal deflagrations. The WIPP WAC (DOE/WIPP 02-3122, *Transuranic Waste Acceptance Criteria for the Waste Isolation Pilot Plant (WIPP WAC)*) is relied upon to preclude shipment of Waste that could result in an internal container fire or deflagration.

RH and CH Waste are received from generator sites in Type B Shipping Packages, which are not opened until positioned in the CH Bay, RH Bay, or Room 108, as applicable. In the event that TRU Waste needs to be placed outside of the WHB, the TRU Waste Container is placed into a Type B Shipping Package and Closed prior to exiting the WHB. Site-derived TRU Waste is excluded because it is directly loaded in a Type A container and stored inside the WHB until disposal in the UG.

No operations are presently performed to open packages outside the WHB, and procedures are in place to ensure packages created in the WHB and placed outside are properly Closed. A Closed Shipping Package has the following features: TRUPACT II or HalfPACT outer lid bolted in place with all bolts present for protection of CH Waste, or TRUPACT-III Shipping Container with the outer cover in place with all bolts in place, or RH-TRU 72-B Shipping Container with the impact limiters properly installed when on a trailer, or on a Road Cask Transfer Car with no lid bolts loosened. Ensuring these packages are Closed ensures the safety function of the packages can be performed. An operation procedure inspection verifies

on a routine basis that the Shipping Packages meet the requirements in this SAC. A Monthly inspection will be completed to verify the Shipping Packages are Closed.

5.6.2.4 Vehicle Exclusion Zone (SAC 5.5.4)

Control Description: The VEZ shall be established, maintained and Attended for the transport of CH Waste in the UG along the Waste Transport Path. Additional vehicle(s) required to enter the VEZ to perform repair, replacement, or CH Waste transfer to another CH Waste Transfer vehicle shall be Attended.

The safety function of the VEZ control is to prevent collisions and fires by restricting the number and operation of UG vehicles during CH Waste transport, thereby reducing the likelihood for pool fires due to leaks and/or collisions.

To reduce the likelihood of fires and collisions, the VEZ control is designated as a SAC since engineered controls are not available to prevent occurrence of events requiring SS protection.

The VEZ is defined as the distance between the leading edge of the lead escort vehicle and the trailing edge of the lag escort vehicle, and the nominal width of drift. The VEZ is established around the CH Waste being transported to prevent other vehicles/equipment from entering the VEZ, and is maintained for the duration of the transport. Electric Lead and Lag vehicles ensure the VEZ only has one liquid-fueled vehicle unless an additional vehicle is required to enter the VEZ for repair or replacements of the waste transport vehicle, or to transfer the Waste payload to another transport vehicle. The electric Lead vehicle is responsible for ensuring a clear path for the Waste Transport Vehicle. A VEZ shall be established around the Waste prior to its transport in the UG and maintained for the duration of the transport. The VEZ cannot be established in the Waste Shaft Station due to the physical size restrictions that limit motion, and is a one way entrance/exit area, which is why the VEZ is set-up outside this area in the S-400/E-140 intersection. The VEZ is applied in the Transport Path from the S-400/E-140 intersection to the designated off -loading location and performed in the opposite direction when CH Waste is returned to surface.

When the Transport Path is established there may be other non-permanent equipment in the VEZ during Waste transport within the nominal width of the drift that is evaluated by procedure prior to establishing the Waste Transport Path. Additionally, the leading escort will evaluate and determine if it is safe to continue the Waste transport past potential obstructions when spotted prior to continuing Waste transport around these obstructions. Such potential obstructions will be situationally determined. If the lead vehicle stops because of these situational concerns, the VEZ is still maintained.

When Waste is Downloaded from the WHB, the VEZ is not established until Waste is removed from the Waste Shaft Conveyance at the Waste Shaft Station and moved into E-140, because of the inability for the Lag vehicle to be present in the area due to the physical size restrictions. The VEZ is set-up outside the Waste Shaft Station in the S-400/E-140 intersection. Once the Waste is positioned between the two escort vehicles in E-140, the VEZ is established and may begin movement toward the designated off -loading location.

The leading and lagging escorts alert personnel in the UG to the approaching Waste and stop Waste transport if an unplanned vehicle is encountered and perceived as a potential hazard. The lag vehicle prevents another vehicle from overcoming the waste transport.

If a vehicle within the VEZ becomes disabled, the VEZ will be maintained while vehicle repair, replacement, or Waste transfer is performed to another Waste Transport Vehicle. These actions may

require entry of other vehicle(s) including liquid-fueled vehicles/equipment into the VEZ. Vehicles/ equipment may enter this area to repair, replace disabled Waste Handling equipment, or transfer the Waste to other Waste Handling equipment. Also in the event that a contaminated zone boundary is required to be crossed, the Waste load must be transferred to another transport vehicle at that boundary. Other vehicles/equipment may be required to enter the VEZ to complete the transfer of Waste to another transport vehicle. The Attended function can be assigned from the Lead, Lag, or Waste Transport Vehicle positions for Waste transfer. When Waste transfer is complete the VEZ will be maintained in the contaminated area. When the VEZ is terminated, the Waste will be Attended to the Waste Face.

The Attendant is an individual in visual contact and in proximity to the vehicles and Waste who is able to control the item of interest. The Attendant will be trained and qualified to notify and take the proper actions when necessary. See definition of Attendant in the TSRs for a detailed description of duties, training and qualifications of the Attendant.

5.6.2.5 Fuel Tanker Prohibition (SAC 5.5.5)

Control Description: Fuel Tankers delivering fuel to the Surface Fuel Station Storage Tanks are prohibited from entering the WHB Parking Area Unit.

The safety function of the Fuel Tanker Prohibition control is to prevent tanker truck pool fires involving TRU Waste Containers by ensuring Fuel Tankers are precluded from the WHB Parking Area Unit, thereby reducing the likelihood for a pool fire involving a Fuel Tanker.

Prohibiting Fuel Tankers from entering the WHB Parking Area Unit reduces the likelihood of fire events involving radiological material.

This prohibition only applies to Fuel Tankers delivering fuel to the Surface Fuel Station Storage Tanks. The prohibition does not apply to fuel containers and tanks that are used for moving fuel on site.

The WIPP safety analysis identified the potential for fuel delivery fire events in the WHB Parking Area Unit. These events could involve the WHB or could propagate to the WHB and involve radiological material contained in the WHB. ACs are required to reduce the likelihood of occurrence and the Fuel Tanker Prohibition control is designated as a SAC, since engineered controls are not available to prevent occurrence of events requiring SS protection.

The Fuel Tanker Prohibition control is established to preclude Fuel Tankers from the entering the WHB Parking Area Unit, which is the parking area south of the WHB. Fuel Tanker operation at WIPP is required for maintaining a fuel supply for WIPP liquid-fueled vehicles/equipment. These operations present the opportunity for radiological material release due to vehicle/equipment fires resulting from the presence of liquid-combustibles and ignition sources and/or impacts to the containers. When a Fuel Tanker enters the facility through the vehicle trap it continues straight ahead on the main access road for approximately 1/8 mile or less and turns left (north) to the fuel offload station. If required to use an alternate route, a Fuel Tanker may enter the site through the north gate. The WHB is south of this main access road and the WHB Parking Area Unit is south of the WHB, well away from the main access road (see DSA Chapter 2.0, Figure 2.4-1).

5.6.2.6 Waste Conveyance Operations (SAC 5.5.6)

Control Description: The Waste Shaft Conveyance shall:

- Be present at the Waste Shaft Collar prior to moving Waste into or out of the Waste Shaft Collar Room.

- Move Waste between the Waste Shaft Collar and the Waste Shaft Station only when Doors 155 and 156 are closed.
- Be present at the Waste Shaft Station prior to bringing Waste into the Waste Shaft Station, from the VEZ.
- Remain at the Waste Shaft Station until the Waste is removed from the Waste Conveyance and is moving away from the Waste Shaft.

The WIPP DSA identifies events in the analysis that involve dropping a Waste load down the Waste Shaft from the Waste Shaft Collar Room or the Waste Shaft Station. It also identified events involving a drop from the Waste Shaft Collar Room of an item large enough to cause a loss of confinement of a Waste Container in the Waste Shaft. These events do not involve a pool fire since liquid fueled vehicles / equipment are prohibited by another control. Consequences to the facility workers and the co-located workers were evaluated to be high.

The safety function of the Waste Conveyance Operations control is to prevent vehicles, equipment, and/or loads from dropping down an open Waste Shaft and impacting Waste Containers by reducing the likelihood of vehicle/equipment drops down the shaft through requiring the presence of the conveyance when preparing to load or off-load, and requiring access to the shaft to be prevented when Waste is being moved in the Waste Shaft.

ACs are required to reduce the likelihood of occurrence of a drop down the Waste Shaft. Therefore, the Waste Conveyance Operations control is designated as a SAC since engineered controls are not available to prevent the occurrence of drop events that require SS protection.

The Waste Shaft Collar is located in the Waste Shaft Collar Room and is surrounded by a structure composed of structural steel and chain link fencing. The Waste Shaft Conveyance operates within the Waste Shaft. The Waste Shaft Collar Room is accessed through Waste Shaft Access Doors 155 and 156. If the Waste Shaft Conveyance is present (visually verified by top lander) at the Waste Shaft Collar prior to moving Waste into the Waste Shaft Collar Room, it prevents the inadvertent drop of any Waste down the Waste Shaft. It also prevents the inadvertent drop of objects capable of impacting Waste on the Waste Shaft Conveyance. If Doors 155 and 156 remain closed while the Waste Shaft Conveyance moves Waste between the Waste Shaft Collar and the Waste Shaft Station during the loading or offloading of the Waste Shaft Conveyance at the Waste Shaft Station, it prevents the inadvertent drop of any vehicle/equipment down the Waste Shaft from impacting Waste.

The Waste Shaft Station is located in the UG at the bottom of Waste Shaft where Waste is taken off of the Waste Shaft Conveyance. If the Waste Shaft Conveyance remains present (visually verified by bottom lander) at the Waste Shaft Station until the Waste is moving away from the Waste Shaft, it prevents the inadvertent drop of any Waste down the Waste Shaft into the shaft sump. Waste that remains on the Waste Shaft Conveyance and is not offloaded can be moved back to the Waste Shaft Collar Room. Once the Waste is removed from the Waste Shaft Conveyance, it continues away from the Waste Shaft area to allow the required operations (i.e., manipulation of the pivot rails, shaft access gates, etc.) to be completed to allow the Waste Shaft Conveyance to return up the shaft to the Waste Shaft Collar. These operations, which are required before the Waste Shaft Conveyance can leave the Waste Shaft Station, physically cannot be completed until the Waste is moved away from the Waste Shaft. Therefore, the physical configuration ensures the Waste cannot be inadvertently dropped down the Waste Shaft into the shaft sump after it leaves the Waste Shaft Conveyance and the Waste is moving away from the Waste Shaft.

Prior to bringing Waste into the Waste Shaft Station from the VEZ, the Waste Conveyance must be present at the Waste Shaft Station (visually verified by the bottom lander) and Doors 155 and 156 closed. If the Waste Conveyance is at the Waste Shaft Station, it will prevent inadvertently dropping the waste down the Waste Shaft into the shaft sump. If the Waste has not entered the VEZ, then the Waste can be loaded back on the Waste Shaft Conveyance as long as the Waste Shaft Conveyance is at the Waste Shaft Station before the Waste transporter moves towards the Waste Shaft.

5.6.2.7 CH Bay Alternative Vehicle Barrier Provision (SAC 5.5.7)

Control Description: Liquid-fueled vehicles/equipment shall be prohibited within the WHB Parking Area Unit unless the following conditions are met:

- Vehicle Barriers are installed as described in Section 5.7.12 (DF 6.12).

  OR

- Liquid-fueled vehicles/equipment shall be Attended when inside the exclusion zone footprint.

  AND

- Moving liquid-fueled vehicles/equipment in the WHB Parking Area Unit shall be Attended when the Vehicle Barriers are not fully installed.

The safety function of the CH Bay Alternative Vehicle Barrier Provision control is to reduce the likelihood for release of radiological material from CH Waste in the WHB due to impacts by vehicles and/or fires adjacent to the southwest wall of the CH Bay by maintaining control of liquid-fueled vehicles/equipment in and around the exclusion zone when the concrete Vehicle Barriers are not fully installed.

The control of CH Bay Alternative Barrier Provision is selected as a SS control. An AC is required to permit access to the exclusion zone that ensures the reduced likelihood of vehicle/equipment collisions and/or pool fires is maintained. Therefore, the CH Bay Alternative Barrier Provision control is designated as a SAC since engineered controls are not available to provide the SS protection. The SAC prevents potential vehicle entry into the exclusion zone and potential impacts.

Vehicle Barriers (Chapter 4.0, Section 4.4.14) are normally installed to establish a vehicle/equipment exclusion zone along the southwest wall of the CH Bay to protect the CH Bay from impacts by vehicles and/or fires adjacent to the CH Bay. Establishment of this area prevents vehicles from crashing through the CH Bay wall and into the CH Bay were CH Waste may be stored, as well as precluding fueled vehicles/equipment from being in this area. Prohibiting liquid-fueled vehicles/equipment from the exclusion zone reduces the likelihood for fires, especially combustible liquid fires, to occur which could compromise the CH Bay external surface and expose CH Waste to significant heat flux. Vehicle operations in the WHB Parking Area Unit present the opportunity for radiological material release due to vehicle/equipment fires resulting from the presence of combustible liquids and ignition sources and/or impacts to the Waste Containers. The use of vehicles and equipment is required by the activities at WIPP. Experience has demonstrated that on occasion, liquid-fueled vehicles and/or equipment may be required to enter the exclusion zone to allow maintenance (e.g., WHB fire main). The area protected by the Vehicle Barriers is the southwest part of the CH Bay. The specific wall section, referred to hereinafter as the southwest wall, that is protected, is that portion of the south exterior CH Bay wall starting at Airlock 100 running in a westerly direction approximately 85 feet to a point nominally 5 feet west of the CH Bay / TRUPACT Maintenance Facility (TMF) common wall. If the Vehicle Barriers must be interrupted or sections temporarily removed for maintenance or other activities, any liquid-fueled vehicles that enter the

exclusion zone defined by the position of the Vehicle Barriers as described in Chapter 4.0, Section 4.4.14, shall be Attended. WIPP Drawing 24-Z-044-W1 shows the placement of the Vehicle Barriers when none are removed as allowed by this SAC.

Vehicles and equipment are used outside of the WHB in the WHB Parking Area Unit to move trailers, Waste Containers, and other equipment to support WIPP Operations. These vehicles may contain combustible fuel or other combustible liquids. A runaway vehicle could impact the southwest wall of the CH Bay when Waste is stored in this area or a combustible liquid pool fire could occur outside the southwest wall of the CH Bay. Either event, impact or pool fire could damage Waste Containers stored in the CH Bay and result in a radiological material release.

The Vehicle Barriers consist of two configured sections of Vehicle Barriers that protect the CH Bay southwest wall from vehicle impacts. Vehicle Barriers are a DF that is described in Chapter 4.0, Section 4.4.14, of the DSA and as shown in Chapter 2.0, Figure 2.4-7 (note: Figure 2.4-7 shows nominal dimensions only).

By preventing vehicles from entering the exclusion zone defined by the placement of the Vehicle Barriers, the potential for an impact with the CH Bay southwest wall or an external pool fire that could damage the Waste stored in the CH Bay is minimized. Although the intent is to emplace the Vehicle Barriers permanently, there are conditions in which one or more of the individual Vehicle Barriers may have to be temporarily moved to allow maintenance or other activities in the exclusion zone.

If the Vehicle Barriers are moved to allow access to the exclusion zone, only the minimum number of individual barriers will be moved, such that only a limited size gap will be opened in the Vehicle Barrier. All the other barriers will remain in place and interconnected to continue to provide the exclusion zone and prevent vehicle impacts or pool fires that could impact the CH Waste inside the southwest corner of the CH Bay. If the barriers are moved per the allowances in this SAC, when the barriers are replaced, the Work Package will require verification that the barriers are installed correctly.

When sections of the Vehicle Barriers are moved to allow vehicle or equipment access to the exclusion zone, the vehicles shall be Attended when a vehicle is within the exclusion zone or when a vehicle is being moved within the adjacent WHB Parking Area Unit. This is to minimize the potential for a collision with the southwest wall of the CH Bay or another obstacle in the area.

Stationary vehicles in the WHB Parking Area Unit do not require an Attendant. A fire in this area is far enough away that the heat flux will not affect the Waste Containers inside the CH Bay.

Attendance of vehicles being moved in the WHB Parking Area Unit is sufficient to prevent inadvertent entry into the exclusion zone because vehicle speed is minimal.

The operational procedure inspection and In Service Inspection Program along with normal Conduct of Operations and Maintenance and routine visual observation of the barriers is sufficient to ensure the barriers are not inadvertently moved or significantly damaged to the point that the safety function cannot be met. Additionally, a Monthly inspection will be performed to verify the barriers were not subjected to significant damage or inadvertently moved.

5.6.2.8 Real-Time Monitoring at Panel 6 and Panel 7 Isolation Bulkheads (SAC 5.5.8)

Control Description: Real-Time Monitoring for elevated airborne radioactive material levels in accordance with the WIPP Radiation Protection Program (RPP) and provisions to alert workers shall be provided in the following areas when these applicable areas are occupied.

- Drift S-2180 and all areas south of Drift S-2180.
- E-300 between S-2180 and the exhaust shaft.
- Areas determined to be within the exhaust path of Panel 6 and/or Panel 7, Room 7 following changes in ventilation configuration.

The safety function of the Real-Time Monitoring at Panel 6 and Panel 7 Isolation Bulkheads control is to mitigate the potential consequences of a radiological material release from an exothermic chemical reaction of noncompliant containers in Panel 6 and/or Panel 7, Room 7, by detecting and promptly alerting facility workers in the applicable areas of elevated airborne radiological activity levels outside of the Isolation Bulkheads.

The control of Real-Time Monitoring at Panel 6 and Panel 7 Isolation Bulkheads is selected as a SS control. An AC is required to ensure that Real-Time Monitoring for elevated airborne radioactive material levels in the applicable areas is available to detect and promptly alert personnel to elevated airborne activity levels outside the Isolation Bulkheads. Therefore, the Real-Time Monitoring at Panel 6 and Panel 7 Isolation Bulkheads control is designated as a SAC since engineered controls are not available to provide the SS protection. The SAC mitigates the potential consequences to the UG workers of a potential radiological release from an exothermic reaction in Panel 6 or Panel 7, Room 7.

Panel 6 and Panel 7, Room 7 have noncompliant waste containers from the same waste stream (LA-MIN02-V.001) that resulted in the exothermic chemical reaction that occurred in Panel 7, Room 7 in February 2014. As Panel 6 and Panel 7, Room 7 have been closed and isolation bulkheads have been installed, the only potential mechanism to detect such an event in the UG would be by Real-Time Monitoring of radioactive particles in the air in the vicinity of the Isolation Bulkheads (Chapter 4.0, Section 4.4.13). The Real-Time Monitoring function will promptly alert UG workers in these areas of elevated airborne radiological contamination and permit the workers to leave the applicable areas. This control is only required when the UG is manned and facility workers are in the applicable areas.

To ensure that elevated airborne radiological levels are detected from an exothermic event in Panel 6 or Panel 7, Room 7, Real-Time Monitoring of airborne radioactive material in accordance with the RPP shall be provided to protect workers in the applicable areas when these areas are occupied. The monitoring method(s) used shall be capable of detecting elevated airborne radiological material and promptly alert the affected workers to leave these areas.

Radiological monitoring is required to ensure that the appropriate actions are taken to protect the UG facility workers. To protect workers that could be affected by radiological material releases from an exothermic reaction in Panel 6 or Panel 7, Room 7, a SAC is established that requires Real-Time Monitoring to detect elevated airborne radiological material leaking from the closed panels to protect workers in the applicable areas from an exothermic event in the closed panels. The applicable areas included in this SAC are:

- Drift S-2180 and all areas south of Drift S-2180.
- E-300 between S-2180 and the exhaust shaft.
- Areas determined to be within the exhaust path of Panel 6 and/or Panel 7, Room 7 following changes in ventilation configuration.

The SAC is applicable when facility workers are located in the applicable areas.

Monitoring of the area near Panel 6 Isolation Bulkheads is defined as the area adjacent to the Panel 6 Intake and Exhaust Isolation Bulkheads. For Panel 7, Room 7 the area where monitoring is required is the is the area near the Panel 7, Room 7 Intake and Exhaust Isolation Bulkheads If workers are in these areas, the Real-Time Monitoring will ensure detection of any leaked radioactive material released from an exothermic event occurring within the closed panel, and that appropriate action is taken to minimize exposure to workers.

The Isolation Bulkheads and stagnant ventilation conditions significantly reduce any driving force for air change across the bulkhead, even in the event of a total ventilation system loss. Any release from the Panel 6 or Panel 7, Room 7, bulkheads due to an exothermic reaction is expected to be a slow process based on the low pressurization, the indirect flow path, and the closure bulkhead system, which will only allow leakage around the bulkhead where the metal bulkhead construction and flashing contact the salt structure or through cracks in the salt structure. Additionally, the airborne activity will be at its highest concentration in these areas and therefore easier to detect. In the exhaust path downstream of these areas, the airborne concentration will be lower due to dilution. Detecting the elevated airborne activity in these areas will allow sufficient time to promptly alert and allow any facility workers who may be in the exhaust path downstream of these areas to leave the applicable area. The WIPP RPP has protocols for tracking, monitoring, and promptly alerting workers downstream of these areas to increased airborne activity in the areas that could be carried downstream.

The RPP is responsible for providing appropriate monitoring along with notification to workers in the applicable area(s). These functions must be provided regardless of UG ventilation configuration, or if ventilation is lost when the applicable area(s) are occupied or access is needed. The Program is expected to evaluate and expand monitoring and/or notification to other potentially affected areas to implement the SAC.

The requirement is to ensure Real-Time Monitoring and provisions to alert workers are in place when workers are in the applicable areas. The Real-Time Monitoring will be controlled by the RPP requirements, which will determine the method by which the Real-Time Monitoring and prompt alerting will be ensured. Although a specific type of monitoring and alerting is not specified in this control as the type and location of the Real-Time Monitoring is expected to change as conditions in the UG change, the preferred method is Continuous Air Monitors (CAMs) that provide an alarm to the CMR. Regardless of the monitoring used, the Real-Time Monitoring must provide detection and a prompt alert function for workers in the applicable areas. The Real-Time Monitoring will typically consist of, but is not limited to, any single method or combination of the methods below as necessary to ensure the credited safety function of this Directive Action SAC:

- CAMs placed to monitor Panel 6 and Panel 7, Room 7 that alarm in the CMR and provide a local alarm.
- Temporary moveable CAMs that will provide a local alarm.
- Radiological Control Technician using a portable hand held monitor.
- Personal monitors with alarm function worn by workers in these areas as specified in the Radiological Work Permit. For groups of workers, at least one worker in visual contact of the others must wear a personal monitor with alarm function.

The monitoring equipment is maintained, calibrated, and tested on a frequency per the requirements of the WIPP RPP.

5.6.3 Safety Management Programs

These ACs shall provide NWP's commitment to the development, implementation, and maintenance of the ACs and the SMPs described in Chapters 6.0 through 18.0, and providing the facility staffing required for operations as described in Chapter 17.0 (Chapters 13.0, "Human Factors," and Chapter 16.0, "Provisions for Decontamination and Decommissioning" were deleted). The individual SMPs are not specifically credited in the hazard or accident analysis for risk reduction, but all are an important part of the safety basis. In addition to worker safety, the cumulative effect of the programmatic details is important to facility safety and is an integral part of safe operations. Key elements of SMPs relevant to facility worker safety are included in the TSRs and their respective SMP chapters that follow:

- Chapter 6.0, Prevention of Inadvertent Criticality.
- Chapter 7.0, Radiation Protection.
- Chapter 8.0, Hazardous Material Protection.
- Chapter 9.0, Radioactive and Hazardous Waste Management.
- Chapter 10.0, Initial Testing, In Service Surveillance, and Maintenance.
- Chapter 11.0, Operational Safety (includes Conduct of Operations and Fire Protection Program).
- Chapter 12.0, Procedures and Training.
- Chapter 14.0, Quality Assurance (includes Documents and Records, Independent Assessments [e.g., Audits and Surveillances]).
- Chapter 15.0, Emergency Preparedness Program.
- Chapter 17.0, Management, Organization, and Institutional Safety Provisions (includes Organization Structure, Responsibilities, and Staffing and Qualifications; and Configuration Management and Document Control).
- Chapter 18.0, WIPP Waste Acceptance Criteria Compliance Program.

Chapter 6.0, Prevention of Inadvertent Criticality

The Prevention of Inadvertent Criticality Program describes the Nuclear Criticality Safety Program. TRU Waste accepted for disposal at the WIPP facility is required to be characterized and certified to meet the requirements of the WIPP WAC prior to being approved for shipment to the WIPP. Nuclear Criticality Safety Evaluations analyze the activities involved in the handling and disposal of TRU Waste and demonstrate criticality incredibility. The Nuclear Criticality Safety Evaluations for CH- and RH-TRU Waste are documented in WIPP-016, *Nuclear Criticality Safety Evaluation for Contact-handled Transuranic Waste at the Waste Isolation Pilot Plant*, and WIPP-020, *Nuclear Criticality Safety Evaluation for Remote-handled Waste at the Waste Isolation Pilot Plant*, respectively. The Nuclear Criticality Safety Program meets the requirements of DOE Order 420.1C, *Facility Safety*, Chapter III, "Nuclear Criticality Safety."

Chapter 7.0, Radiation Protection

The RPP describes the organization and functional responsibilities for radiological control, documents the RPP structure, and defines the radiological control management systems necessary to implement the program in accordance with the requirements of 10 CFR 835, "Occupational Radiation Protection." The program includes ALARA (As Low As Reasonably Achievable) practices, training, radiation monitoring,

radiation exposure control, radiation protection instrumentation, and record keeping. The RPP includes specific program documents, and procedures developed and maintained to implement the program.

Chapter 8.0, Hazardous Material Protection

The Hazardous Material Protection Program is established to protect human health and the environment by controlling chemical hazards in accordance with 10 CFR 851, "Worker Safety and Health Program," and 29 CFR 1910.1200, "Hazard Communication." The program defines the scope of chemicals covered and provides direction and references to analyze the hazards that are inherent in their storage and use. Aspects of the program include Hazard Communications, training, Hazardous Material Exposure Control, Hazardous Material Monitoring, instrumentation, and recordkeeping. It describes the processes and systems used for work performed by NWP and by subcontractors for their activities to control chemical hazards to protect personnel, the public, and the environment.

Chapter 9.0, Radioactive and Hazardous Waste Management

The Radioactive and Hazardous Waste Management Program is established to manage radiological, mixed, and hazardous wastes that are generated as a result of operations pertaining to the mission or from recovery actions. The waste management programs and organizations, the sources of the site waste streams and characteristics, the waste management process, including the overall waste management policy/philosophy, and DFs and ACs for the Waste Handling or treatment system for site-derived and site-generated waste are the significant aspects of this Program. Wastes generated during maintenance and operation of the facilities and equipment, or from decontamination activities are managed in accordance with this Program. These wastes include radioactive and mixed waste as either the low-level or TRU Waste with radiological levels from the TRU waste handling and disposal process, as defined in the *Waste Isolation Pilot Plant Hazardous Waste Facility Permit, NM4890139088-TSDF* (HWFP), and site-generated hazardous waste.

Chapter 10.0, Initial Testing, In Service Surveillance, and Maintenance

The Initial Testing, In Service Surveillance, and Maintenance Programs present programs for:

- Demonstrating that testing is performed to ensure that SS SSCs and DFs subject to degradation; other systems that perform important defense-in-depth functions; equipment relied on for the safe operation, safe shutdown of the nuclear facility, and for maintaining the facility in a safe shutdown condition as documented in the safety basis and safety support systems; meet their functional requirements and performance criteria such that the WIPP operations have assurance SSCs fulfill normal and safety functions described in this DSA; and

- Ensuring that maintenance activities are conducted in accordance with DOE Order 433.1B, *Maintenance Management Program for DOE Nuclear Facilities*, to preserve and restore the availability, Operability, and reliability of the WIPP SSCs important to the operation of the facility.

Chapter 11.0, Operational Safety

The Operational Safety Program provides safety through conduct of operations and FPPs. In accordance with regulatory requirements, the conduct of operations specifically focuses on the bases of operations, such as management, organization, the institutional safety provisions, procedures, training, and human factors. Opportunities for improvements in Conduct of Operations as identified in the Accident

Investigation Board Reports (AIB Reports of March 2014, April 2014, and April 2015) and other sources were evaluated and incorporated into the program, as appropriate.

The FPP addresses both Fire Prevention and Fire Suppression. Major topics of the FPP include: Fire Hazards, FPP and Organization, Combustible Loading Program, Control of "Hot Work," Firefighting Capabilities, and Firefighting Readiness Assurance.

The Conduct of Operations Program addresses each of the salient features identified in DOE Order 422.1, *Conduct of Operations*.

Chapter 12.0, Procedures and Training

The Procedures and Training Program provides the processes used to develop, verify, and validate the technical content of procedures and the WIPP training programs as well as the processes used to keep them current through feedback, periodic reviews, and continuous improvement processes. The ongoing implementation of these processes is a necessary part of safety assurance. Through their effective implementation, the WIPP facility is operated and maintained using established processes by personnel who are trained commensurate with their responsibilities. Training requirements for the WIPP staff conform to the requirements of DOE Order 426.2, *Personnel Selection, Training, Qualification, and Certification Requirements for DOE Nuclear Facilities,* or successor document.

The Procedures Program focuses on the Development and Maintenance of Procedures while the Training Program addresses the Development and Maintenance of Training as well as the Modification of Training Materials.

Chapter 13.0, Human Factors – DELETED

Chapter 14.0, Quality Assurance

Facility nuclear safety is ensured in part through implementation of a Quality Assurance Program based on 10 CFR 830, Subpart A requirements and other pertinent regulations, standards, and DOE Orders. The principal features of the Program include organization, quality improvement (including corrective measures), document control and records management for the WIPP work processes, and independent assessments. NWP applies a graded approach for the application of Quality Assurance (QA) requirements to WIPP items and activities in accordance with regulatory guidance. The graded-approach process determines the level of quality-related controls appropriate for each item or activity. In accordance with the graded approach, the highest level of quality controls is applied to nuclear safety–related items and services. The NWP QA Department independently verifies quality by measures such as procurement reviews, supplier qualification, assessments, and inspections.

Chapter 15.0, Emergency Preparedness Program

The Emergency Management Program provides an organized structure for response to the scope of emergencies identified at WIPP that meets the requirements of DOE Order 151.1C, *Comprehensive Emergency Management System*. The objective of the Program is to minimize the impact of emergency events on the health and safety of plant personnel, the general public, and the environment. The Emergency Management Program is implemented through emergency response procedures, and emergency management administrative procedures. In emergency events that could threaten human health or the environment, including hazardous material (radioactive and non-radioactive) or waste events, the plan, procedures, and standard operating guides are implemented.

The program addresses the Emergency Response Organization, Assessment Actions, Notification, Emergency Facilities and Equipment, Protective Actions, Training and Exercises, and Recovery and Reentry.

Chapter 16.0, Provisions for Decontamination and Decommissioning – DELETED

Chapter 17.0, Management, Organization, and Institutional Safety Provisions

The Management, Organization, and Institutional Safety Provisions Program establishes the overall structure of the organizations and entities involved in safety-related functions, including key responsibilities and interfaces; and establishes the safety programs that promote safety consciousness and morale, including safety culture, Contractor Assurance, configuration control, occurrence reporting, and staffing and qualification. The organization structure is displayed in DSA Chapter 17.0, Figure 17.3-1, "Nuclear Waste Partnership LLC Organization Structure."

Chapter 18.0, WIPP Waste Acceptance Criteria Compliance Program

The Waste Acceptance Criteria Compliance Program addresses the WIPP WAC Compliance process. The Hazards Analysis of this DSA uses selected WIPP WAC requirements as ICs in the analyses of postulated release scenarios to provide bounding radiological consequences to the onsite and offsite receptors. WIPP has a limited number of activities, which support WIPP WAC compliance given that Waste Containers are received as certified as meeting the WIPP WAC prior to shipment to WIPP. Waste Containers are restricted from being opened for examination of the contents or repackaging at WIPP. The chapter describes the National TRU Program and its measures that, although many are beyond the activities subject to this DSA, ensure compliance with the WIPP WAC.

5.7 DESIGN FEATURES

DFs are characteristics of the facility, typically not subject to change by Operations personnel (e.g., configuration, physical arrangement, shielding, structural walls, relative locations of structures and components, or physical dimensions and interfaces). DFs if altered or modified could have a significant effect on safety. DFs are credited as performing a safety function in the hazard analysis. A description of the DF, Safety Function, Performance Criteria, In Service Inspection, and In Service Inspection Frequency are provided below.

Additionally, derivation of the TSR DFs are based upon input from Chapter 4.0, which is also summarized to include key features, that is necessary to ensure the safety function and performance criteria of the SSCs that are carried forward. Specificity is included in the TSR DF to clarify SSC key features relative to configuration, physical arrangement, shielding, structural walls, relative locations of structures and components, or physical dimensions and interfaces.

WIPP has an established In Service Inspection Program, as required by Chapter 10.0, which provides key elements of the In Service Inspection Program (see TSR Section 5.6.1). The Cognizant System Engineers develop the In Service Inspection requirements for those items to be inspected and the inspection frequencies based on the DF performance criteria. The appropriate In Service Inspection requirements and frequencies are identified in WIPP procedures and the In Service Inspections will be completed by qualified personnel. Deviations or changes to the In Service Inspections will be subject to the USQ process.

5.7.1 Waste Handling Building Structure (DF 6.1)

The WHB is a structure in which CH and RH Wastes are handled (inspected, stored, and moved) prior to emplacement in the UG. CH and RH Waste enters the WHB in Type B Shipping Packages and are unloaded. Once the Waste is prepared for emplacement, it is transported to the Waste Shaft Access Area. The Waste Shaft Access Area provides access in separate locations for the CH and RH Waste. The WHB structure protects various rooms, including the CH Bay, Room 108, RH Bay, CUR, Transfer Cell, and Waste Hoist Tower, that support the emplacement activities from externally induced building stresses. Additionally, the WHB layout prevents a direct, unencumbered access to the Waste Shaft by vehicle/ equipment for postulated drop down Waste Shaft scenarios. The floor plan layout of the WHB is detailed in Chapter 2.0, Figure 2.4-4, of the DSA.

The TMF, Support Building, and Main Access Corridor, are contiguous and connected to the WHB. Therefore, the structural DFs of these buildings that prevent damage to the WHB during NPH must be protected in the same manner as the structural DFs of the WHB. These three buildings are specifically included in this control.

The WHB is credited to protect ICs of this analysis through the performance of the following multiple safety functions:

- To prevent radiological material releases due to seismic induced collapse of the WHB.
- To prevent radiological material releases due to high winds, tornadoes, and/or wind/tornado generated missile induced collapse of the WHB.
- To prevent radiological material releases due to snow/ice roof loading induced collapse of the WHB.
- To prevent radiological material releases due to propagating fires through the structure from externally initiated fires or through roof collapse from credible internal fire scenarios.
- To prevent radiological material releases due to loss of confinement from vehicle/equipment drop down Waste Shaft.

The performance criteria/controls of the WHB, TMF, and Support Building structures are provided below.

The WHB is designed as follows for NPH events:

- Design Basis Earthquake (DBE) with 0.1 (g) peak ground acceleration (PGA).
- Design Basis Tornado (DBT) of 183 mph winds with a translational velocity of 41 mph, tangential velocity of 124 mph, a maximum rotational velocity radius of 325 feet, a pressure drop of 0.5 pounds per square inch (psi), and a pressure drop rate of 0.09 psi per second.
- Straight-line wind of 110 mph, at 30 feet aboveground.
- Snow/ice load of 27 pounds per square foot (lb/ft^2).
- Non-combustible construction of external WHB walls and curbing shall ensure external fires do not propagate to areas inside the building.
- WHB shall not collapse as a result of credible fire scenarios.

- The route of vehicle/equipment to the Waste Shaft shall prevent a direct, unencumbered path to the Waste Shaft.
- The TRUDOCK Cranes are designed for DBE with 0.1 g PGA.

The TMF performance criteria are:

- The TMF (Building 412) is designed to withstand a DBE with 0.1 g PGA.
- The TMF is designed to withstand a DBT.
- TMF roof is designed to withstand 27 lb/ft^2 of snow/ice load.

The performance criteria of the Support Building are:

- The main lateral-force-resisting structural members of the Support Building are designed to withstand a DBE with 0.1 g PGA.
- The main lateral-force-resisting structural members of the Support Building are designed to withstand a DBT.
- Building roof is designed to withstand a snow/ice dead load of 10 lb/ft^2.

The WHB structure is designed to prevent structural failure or damage during and following natural phenomenon and fire events. The TMF and Support Building are designed and constructed to not degrade the ability of the WHB to survive NPH events. The WHB is constructed in accordance with the requirements of NFPA 220, *Standards on Types of Building Construction*, Type II construction. The roof design and construction of the WHB, including the CH Bay, Room 108, RH Bay, CUR Transfer Cell, and Waste Hoist Tower, prevents building collapse caused by snow/ice loading on the roof from impacting Waste Containers outside a Closed Type B Shipping Package. The TRUDOCK Cranes are designed to prevent their collapse and drop to the CH Bay floor during a DBE. The noncombustible materials (steel and concrete) used in the construction of the WHB and curbing minimizes fire propagation into and within the WHB and provides a confinement barrier for radiological or HAZMAT releases occurring inside the WHB caused by NPH events (i.e., tornado, earthquake, high wind, and snow/ice loading on the roof) and fire.

The design of the CLR provides right angle access and limited straight line distance from the access point to the Shaft Entry Room access door. DSA Chapter 2.0, Figure 2.4-4, shows the limited size and the structure that prevents direct and unrestricted vehicle/equipment access to the Waste Shaft Collar, preventing TRU Waste or vehicles/equipment from being dropped down the Waste Shaft. Right angle access to Shaft Entry Room after entering the CLR or FCLR, and a limited straight-line distance between the access point and Shaft Entry Room prevents significant vehicle acceleration that could lead to uncontrolled vehicle movements.

The TMF has the same structural design parameters and performance criteria as the WHB. Therefore, the evaluation of the structural capabilities of the above will apply to the TMF. The TMF will not fail in a NPH event and will not result in damage to the WHB or any Waste in the WHB in an NPH event.

With the exception of the roof snow load requirement, the Support Building and the Main Access Corridor have the same structural design parameters and performance criteria as the WHB. The Support Building has a snow/ice dead load design limit of 10 lbs/ft^2. Per ETO-Z-244, the Support Building has a live load limit of 20 lbs/ft^2. The ETO evaluation indicates that the combined 30 lbs/ft^2 load limit of the Support Building will safely contain a snow load of 27 lbs/ft^2 or the same limit as the WHB and TMF.

SDD CF00–GC00 states, “The main lateral-force-resisting structural members of the Support Building are designed to withstand the DBE to prevent these structures from collapsing on the adjacent WHB.” This is documented in D-76-D01 and CS-45-D-481. The Support Building will also withstand a DBT to prevent damage to the WHB as shown in D-76-D01. Based on the evaluations, it is concluded that the Support Building will not fail in such a manner that the WHB or any Waste inside the WHB will be damaged in a NPH event.

Key features of the WHB structure include the concrete and metal structure and curbing of the WHB (CH Bay, Room 108, RH Bay, CUR, Transfer Cell, and Waste Hoist Tower), which are of noncombustible construction and meet design basis requirements for NPH events. The noncombustible and structurally robust WHB structure and curbing will prevent fire and NPH events from impacting Waste in the WHB that is outside a Closed Type B Shipping Package. The concrete curbing is part of the building foundation that extends above grade.

The structural DFs of the, Support Building, TMF, and Main Access Corridor that will prevent damage to the WHB during a NPH event are specifically included in this DF control.

This DF will be inspected to confirm continued Operability per the In Service Inspection Program.

5.7.2 TRUDOCK 6-ton Crane – DELETED

5.7.3 Facility Pallet (DF 6.3)

To support the handling of CH Waste Containers within the facility, a Facility Pallet is employed. Facility Pallets (SDD WH00, *Waste Handling System, System Design Description*) are non-combustible, fabricated-steel units. Facility Pallets are designed to transport CH Waste assemblies such as drums, SWBs, shielded containers, TDOPs, and/or SLB2s to the UG. The Facility Pallet is presented in Chapter 2.0, Figure 2.6-23, of the DSA. WIPP Facility Pallets are constructed of carbon steel with American Society for Testing and Materials (ASTM) A240, *Standard Specification for Chromium, and Chromium-Nickel, Stainless Steel Plate, Sheet, and Strip for Pressure Vessels and for General Applications*, Type 304 stainless steel (top, bottom and side surfaces) with compatible fasteners and weld material. Except for 8 three-inch diameter hold down holes, the pallet is closed over the top and bottom surfaces. These hold down holes are located away from the pallet edge and away from Waste package locations on top of the pallet. Therefore, there are no holes that would expose the bottom of a CH Waste Container to direct flame impingement. This Facility Pallet on a flat surface would obstruct development of the flame structure and entrainment of combustion air in the pallet area. In addition to surviving a floor based pool fire, the metal Facility Pallet will also survive expected pool fires when suspended over an opening underneath the pallet. The pallet has a solid metal bottom, and an event such as a pool fire under a small portion of the pallet, such as exists when on the UG transporter trailer, will not compromise the structural integrity of the pallet.

The safety function of the Facility Pallet is to prevent direct flame impingement on CH Waste Containers in a pool fire to mitigate a release of radiological material.

Performance criteria of the Facility Pallet notes that the pallets shall be constructed of ASTM A240, Type 304 steel in a manner such that the pallet: 1, has no through hole penetrations that would allow direct flame contact with the container surfaces, and 2, will support the weight of the CH Waste Container load in a pool fire.

The Facility Pallet provides a stainless steel noncombustible surface excluding 8 tie-down penetrations, which provides a contiguous flame barrier that prevents direct flame impingement on the bottom of the CH Waste Containers and reduces the potential for lid ejection. Without lid ejection, the Waste would burn confined material, which has a lower Airborne Release Fraction (ARF) than unconfined burning of materials. Facility Pallets have a structural design rated load of 25,000 pounds of Waste material and associated containers. Fire Protection Engineer evaluations have been made to indicate that the current design requirements would prevent the collapse of a pallet in a potential pool fire.

The key features of the Facility Pallet are that the pallet provides a stainless steel noncombustible surface excluding eight tie-down penetrations, that provides a contiguous flame barrier preventing direct flame impingement on the bottom of the Waste Containers, and has robust construction/strength that support the Waste loads during a pool fire.

This DF will be inspected to confirm continued Operability per the In Service Inspection Program.

5.7.4 Underground Liquid-fueled Waste Handling Vehicles – DELETED

5.7.5 RH Bay Design – DELETED

5.7.6 Waste Hoist Support Structure (DF 6.6)

The Waste Hoist is used to lower and raise Waste packages from the UG. The Waste Hoist and its associated components are supported by a robust structure. The Waste Hoist Support Structure consists of four steel I-beam columns, mounted on a substantial concrete foundation, supporting four steel I-beam girders, bedplate, friction drum, drum shaft, and six head ropes that fully support the Waste Conveyance. The Waste Hoist Support Structure is capable of supporting a conveyance (with rope fittings) of 33 tons, a counterweight (with rope fittings) of 52 tons, and a design payload of 45 tons, and is designed to withstand the DBE. The Waste Hoist Support Structure is constructed of non-combustible steel components, and is designed to support the Waste Hoist Conveyance and a maximum load conveyance under all normal, upset and design basis NPH conditions. The Waste Hoist Support Structure is interconnected with and enclosed by the SS WHB (Chapter 4.0, Section 4.4.1); specifically, the Waste Hoist Tower portion of the WHB.

The Waste Hoist Support Structure is credited to protect an IC of this analysis through the performance of the safety function to prevent a radiological material release due to an uncontrolled Waste Conveyance movement that results in loss of confinement, fire, or NPH initiated failure of the Waste Hoist Support Structure by establishing a basis for the low (Unlikely for NPH and Extreme Unlikely for uncontrolled movement and fires) unmitigated likelihood assignments.

The performance criteria of the Waste Hoist Support Structure are as follows:

- The Waste Hoist Support Structure shall be designed for the vertical load combination of deadload, maximum payload, and forces transmitted from the hoisting ropes and tailropes during normal operation.
- Waste Hoist Support Structure shall be designed for a DBE of 0.01 g PGA.
- The Waste Hoist Support Structure shall be constructed of noncombustible materials and not subject to failure due to in–situ combustible loads.

Key features of the Waste Hoist Support Structure include that the structure is located directly over the Waste Shaft, is a robust non-combustible steel structure that consists of four steel I-beam columns, mounted on a substantial concrete foundation, supporting four steel I-beam girders that support the Waste Hoist, the hoist motor and drum, the wire ropes and load bearing components, counterweights, hoist brake system, and a maximally loaded conveyance (up to a 45 ton payload) under all normal operating and design basis seismic conditions. The structure also has floor slabs and pads to which hoist equipment is bolted at various elevations to support the hoist system equipment. The Waste Hoist Support Structure is constructed of non-combustible materials and is not subject to failure from a fire related to combustible loads.

This DF will be inspected to confirm continued Operability per the In Service Inspection Program.

5.7.7 Underground Fuel and Oil Storage Areas (DF 6.7)

To support operations, Fuel and Oil Storage Areas are provided in the UG, and both are located north of S-90. These areas allow for substantial quantities of liquid-combustibles to be stored and dispensed.

The locations of the UG Fuel and Oil Storage Areas are credited to protect an IC of this analysis through the performance of the safety function to preclude or eliminate the flammable or combustible liquid hazard resulting in a pool fire or explosion at either storage location from affecting TRU Waste through the provisions of a substantial separation distance.

The performance criterion for the UG Fueling and Oil Storage Areas is that they shall be located at or north of the S-90 Drift. These physical locations/distances are far greater than those associated with the diameter of the worst case pool fires in these areas and where Waste may be present (i.e., Waste Shaft Station, Waste Transport Path, and Disposal Rooms). Any Fuel or Oil Storage Areas at or north of S-90 are greater than 300 feet from any TRU Waste activities.

Key features of the UG Fuel and Oil Storage Areas control are the location within the non-combustible salt structure of the mine and the distance. The separation distance between the UG Fuel and Oil Storage Area is a minimum of 300 feet from any Waste in the UG.

This DF will be inspected to confirm continued Operability per the In Service Inspection Program.

5.7.8 Facility Casks (DF 6.8)

There are two types of Facility Casks, the RH Facility Cask and the LWFC, used to transfer the RH Waste canister from the WHB FCLR to final emplacement in the UG boreholes. The design of the RH Facility Cask and LWFC is comprised of two concentric steel cylinders with a lead filled annulus of nominal thickness 4.75 inches and 2.0 inches respectively, with a 9.0-inch shield valve on each end that reduces surface dose to less than or equal to 200 millirem (mrem) per hour to the facility worker when the enclosed RH Waste canister has a dose rate of 7,000 or 100 rem per hour, respectively. Once the RH Facility Cask and LWFC are closed, the shield valves are closed with the pins locking the shield valves in place. The robustness of the RH Facility Cask and LWFC serves to prevent any breach of the Facility Cask, and the RH Waste canister. An internal deflagration in a RH Waste canister within either cask is qualitatively judged to be insufficient to breach the cask. The confinement provided by the RH Facility Cask/LWFC mitigates the consequences of any release of the confined Waste in any fire event.

The RH Facility Cask and LWFC are credited to protect ICs of this analysis through the performance of the following safety functions:

- To mitigate worker exposure to a high radiation source by reducing the gamma and/or neutron surface dose rates through the provision of robust shielding.
- To prevent the release of radiological material due to fires, impacts, or internal RH Waste canister deflagrations due to their robust construction reducing the likelihood for release of radiological material.

The following performance criteria of the RH Facility Cask and LWFC are:

- The closed RH Facility Cask/LWFC shall provide shielding such that the surface dose rate is less than or equal to 200 mrem/hour when transporting RH Waste.
- The closed RH Facility Cask/LWFC shall prevent a breach of the enclosed RH Waste canister when subjected to impacts.
- The closed RH Facility Cask/LWFC shall have no penetrations to allow direct flame impingement on the contained RH Waste canister.
- The closed RH Facility Cask/LWFC shall prevent a breach when subjected to internal RH Waste canister deflagrations.

Key features of the Facility Casks are to provide shielding to limit the worker exposure to a high radiation source from the RH Waste. The Facility Casks are robust steel structures composed of a cylinder in a cylinder with a lead filled annulus between the cylinders. The RH Facility Cask has a nominal lead thickness of 4.75 inches while the LWFC lead annulus is nominally 2.0 inches thick. The cask ends are composed of nominally 9 inches thick steel gate valves. The robust design of the steel casks will prevent damage to the enclosed RH Waste canister in the event of a drop or impact. The closed RH Facility Cask and LWFC have no penetrations to allow direct flame impingement on the contained RH Waste canister. Additionally, the RH Facility Cask and LWFC are robust enough to mitigate a release when subjected to an internal deflagration.

This DF will be inspected to confirm continued Operability per the In Service Inspection Program.

5.7.9 Type B Shipping Package (DF 6.9)

The Type B Shipping Package is used to transport all Waste to the WIPP facility. The Type B Shipping Package design is certified by the U.S. Nuclear Regulatory Commission (NRC) for transport of radiological waste on the nation’s highways.

The safety function of the Type B Shipping Package is to limit the release of radiological material from fires, payload deflagrations, and/or collisions due to its robust construction and qualification under accident conditions, thereby mitigating the consequences of an event, and its installed shielding on the RH 72-B Packages reduces the likelihood for excessive gamma and/or neutron exposure to workers.

The Type B Shipping Package supports the WIPP accident analysis as it: prevents direct flame impingement on TRU Waste Containers; prevents release of radiological material from collisions, drops, fires, internal TRU Waste Container fires, explosions; and limits release of radiological material from internal deflagration. Extensive testing has been performed to ensure the TRU Waste is protected from a release in the event of an upset or accident condition.

The surface dose rates of the Type B Shipping Package are below the regulatory allowable (10 CFR 71.47[a]) for normal conditions of transport. This ensures that workers are protected against radiation exposure when in proximity to and/or handling Shipping Packages.

Type B Shipping Packages are not specifically designed nor constructed for mitigation of explosions from internal or external sources. However, the Type B Shipping Package is qualitatively judged due to its robust construction, to maintain confinement integrity when subjected to internal deflagrations. The WIPP WAC (DOE/WIPP 02-3122) is relied upon to preclude shipment of Waste that could result in an internal container fire or deflagration.

The performance criterion of the Type B Shipping Package shall meet the criteria of 10 CFR 71, "Packaging and Transportation of Radioactive Material."

Type B Shipping Packages are designed and constructed to the requirements presented in 10 CFR 71 and are certified in accordance with the requirements of 49 CFR 173, "*Shippers - General Requirements for Shipments and Packagings*," Subpart I, "*Class 7 (Radioactive) Materials*." To meet the certification, the package design is required to successfully pass the criteria provided in 10 CFR 71.71, "*Normal Conditions of Transport*," and 10 CFR 71.73, "*Hypothetical Accident Conditions*," which include demonstration that no release of contents occurs after a 30-foot drop onto an unyielding surface or a thermal exposure of 800°C (1,475°F) for 30 minutes.

The key feature of the Type B Shipping Packages are that the packages meet or exceed the minimum requirements of 10 CFR 71. If the Shipping Packages meet the certification requirements/specifications, the Shipping Package has been demonstrated to be of sufficiently robust construction and sealed properly to prevent damage to the Waste Containers inside the Shipping Package. As WIPP receives certified Shipping Packages, a check is performed against the manifest upon receipt, and the package is visually inspected.

No operations are presently performed to open packages outside the WHB, and procedures are in place to ensure packages created in the WHB and placed outside are properly Closed. Ensuring these packages are Closed ensures the safety function of the package. A Closed Shipping Package has the following features: TRUPACT II or HalfPACT with the outer lid bolted in place with all bolts present for protection of CH Waste, or TRUPACT-III Shipping Container with the outer cover in place with all bolts in place, or RH-TRU 72-B Shipping Container with both impact limiters properly installed when on a trailer, or on a Road Cask Transfer Car with no lid bolts loosened.

This DF will be inspected to confirm continued Operability per the In Service Inspection Program.

5.7.10 Facility Cask Loading Room, Cask Unloading Room, and Transfer Cell Shielding (DF 6.10)

The FCLR, CUR, and Transfer Cell are an area in the WHB used to process the RH Waste. The FCLR, CUR, and Transfer Cell contain concrete walls, floors and ceilings, which provide permanent radiation shielding for personnel whenever RH Waste canisters are not in a Closed Type B Shipping Package, or Facility Cask/LWFC. The shielding is designed for an internal gamma surface dose rate of 400,000 rem per hour, and for an internal neutron surface dose rate of 45 rem per hour. See Chapter 2.0 for actual dimensions of the concrete thickness for radiation shielding (DSA Chapter 2.0, Figure 2.4-6).

The FCLR, CUR and Transfer Cell Shielding is credited to protect an IC of this analysis through the performance of the safety function to mitigate worker exposure to a high radiation source by providing

permanent radiation shielding for when RH Waste canisters are not shielded by other SSCs (e.g., Type B Shipping Package, Facility Cask, or LWFC).

The performance criteria for the FCLR, CUR and Transfer Cell walls, ceiling, floors, and window, shall provide shielding such that the external dose rate is less than or equal to 200 mrem per hour.

Key features of the FCLR, CUR, and Transfer Cell Shielding are that they are robustly constructed of concrete and steel, steel and/or concrete doors and plugs provide adequate shielding to ensure the external radiation dose outside the Hot Cell Complex is less than or equal to 200 mrem per hour when RH Waste is outside the Closed Type B Shipping Package. The shielding is a part of the building structure and is permanently installed. Depending on the location, the shielding may be up to 54-inch thick reinforced concrete.

This DF will be inspected to confirm continued Operability per the In Service Inspection Program.

5.7.11 Panel 6 and Panel 7, Room 7 Bulkheads (DF 6.11)

The Bulkhead is a non-combustible barrier used in the UG to isolate closed disposal areas from the active ventilation system to contain any potential releases, and minimize leakage outside the closed areas.

The Panel 6 and Panel 7, Room 7 Bulkheads are credited to protect an IC of this analysis through the performance of the safety function to reduce the quantity of material that could be released from an exothermal chemical reaction within a CH Waste Container located in Panel 6, or Panel 7, Room 7 by creating static conditions that resist transmission of particulates and allow for gravitational settling.

The performance criterion for the Panel 6, and Panel 7, Room 7 Bulkheads is that the Bulkheads are a solid non-combustible wall (except for flexible flashing) that is secured to the Panel opening (i.e., walls, ceiling, and floor).

The Panel 6 Bulkheads are constructed of steel and have a flexible flashing that is bolted to the walls (ribs), and roof (back) of the entry. The secured bulkhead creates static conditions that resist the release of radiological material as well as creating a stagnant area for gravitational settling of radiological material release within the rooms. The steel bulkhead is about 22 feet from the Waste Face, based on a 2-foot gap between the Waste Face and chain link curtain, a 10 foot-long salt pile, and a 10-foot gap from the toe of the pile to the steel bulkhead (nominal dimensions).

The Panel 7, Room 7, bulkheads are constructed of steel with flexible flashing consisting of two layers of brattice bolted to the walls (ribs) and roof (back) at the air intake and outlet side of the Room. The secured bulkhead creates static conditions that resist the release of radiological material as well as creating a stagnant area for gravitational settling of radiological material released within the rooms. The intake air steel bulkhead is more than 400-feet away from the nearest Waste Containers because Room 7 is only partly filled with Waste. On the air exhaust side of Room 7, the room regulator bulkhead is in place, and a (new) steel bulkhead is installed approximately 8-feet from the regulator bulkhead.

The Panel 6 and Panel 7, Room 7 Bulkheads are described in Chapter 2.0, Section 2.4.4.6, with the design parameters described in SDD AU00, *Underground Facilities and Equipment System Design Description.*

The key features of the Panel 6 and Panel 7, Room 7 Bulkheads and flexible flashing are that the bulkheads are designed to reduce the quantity of radiological material released from inside the panels and rooms. The bulkheads are constructed of steel with flashing bolted to the walls, ceiling, and floor. The bulkheads are physically separated by specific distances from the Waste inside the panels as specified in

the drawings for the different bulkheads. The distances and materials of construction may vary based on the conditions in the room because the bulkheads are specific to each panel. The Panel 6 bulkhead is a more typical bulkhead used in the closed WIPP Waste Storage Panels as it contains a 10 foot long salt pile between the Waste and the bulkhead. The Panel 7 Bulkhead is emplaced without the salt pile but further from the Waste Face inside the panel.

This DF will be inspected to confirm continued Operability per the In Service Inspection Program.

5.7.12 Vehicle Barriers (DF 6.12)

Vehicle Barriers along the southwest wall of the WHB reduce the likelihood for pool fires and/or vehicle impacts in this area, which could affect CH Waste that is stored in the CH Bay area west of the Airlock 100 entrance into the bay.

Vehicle Barriers are a configured set of concrete barriers (e.g., Jersey-type barriers) consisting of two continuous sections. The first section includes two rows of interconnected concrete barriers, installed approximately 5 feet west of the CH Bay/TMF common wall extending south from the TMF exterior wall a minimum of 25 feet. The second section consists of one row of interconnected concrete barriers positioned at least 25 feet south of the CH Bay exterior southwest wall extending west between Airlock 100 to a point approximately 5 feet west of the CH Bay/TMF common wall (approximately 85 feet in total length) to intersect with the double row of barriers. An opening with a gap of less than or equal to 3 feet at the intersection of the east-west barrier and the double row of barriers is permitted for fire department access. A concrete Jersey type Vehicle Barrier is approximately 32 inches high, with a 24-inch base, in a variety of lengths, and weighs about 400 pounds or more per lineal foot. The barrier contains links (typically steel loops) at the end of each barrier that allow multiple barriers to be connected in series using connectors (e.g., steel J-J hooks or pin-and-loop) provided by the barrier manufacturer. Multiple individual barriers are connected in series using the manufacturer's recommended connectors to form a configured barrier of the desired length a minimum of 25 feet from the exterior of the southwest wall of the CH Bay. The Vehicle Barriers are employed to prevent vehicles from entering the area immediately adjacent to the CH Bay southwest wall. Establishment of this exclusion zone prevents vehicles from crashing through the CH Bay wall and into the CH Bay, where CH Waste may be stored, as well as precluding fueled vehicles/equipment from being in this area. Prohibiting liquid-fueled vehicles/equipment from being in this area reduces the likelihood for fires, especially combustible liquid fires to occur, which could compromise the CH Bay external surface and expose CH Waste to a significant heat flux.

The safety function of the CH Bay Vehicle Barriers is to reduce the likelihood for release of radiological material from CH Waste in the WHB due to impacts by vehicles and/or fires adjacent to the southwest wall of the CH Bay by providing a standoff distance from the CH Bay and substantial resistance to vehicular impacts.

The performance criteria for the Vehicle Barriers states that a configured set of concrete barriers consisting of two sections; section one being a two-row barrier positioned approximately 5 feet west of the CH Bay/TMF common wall and extending south from the TMF south exterior wall a minimum distance of 25 feet, and section two being a single-row barrier, positioned a minimum of 25 feet south of the CH Bay southwest exterior wall extending west between Airlock 100 to a point approximately 5 feet west of the CH Bay/TMF common wall to intersect with the double-row of barriers. An opening with a gap of less than or equal to 3 feet at the intersection of the east-west barrier and the double-row of barriers is permitted. WIPP Drawing 24-Z-044-W1 shows the placement of the Vehicle Barriers.

The 3-foot gap is permitted for personnel access and placement of fire hose(s) by the fire department. The 3-foot gap is less than the width of liquid-fueled vehicles traversing this area and will protect the CH Bay southwest wall while providing the required working space by the fire department.

Key features of the Vehicle Barriers are that the barriers are structurally sound, robust, and have sufficient structural or material strength to withstand an impact or contain materials that will spread the load of an impact. The barriers shall prevent a vehicle from breaching the barriers thereby preventing a vehicle impact with the WHB. The barriers are steel reinforced concrete barriers. The barriers shall have the capability to be interconnected with adjoining barriers using manufacturer supplied linking devices (e.g., J-J Hook, or pin-and-loop connectors).

Vehicle Barriers are not to be moved unless per procedure and in accordance with directed action SAC 5.6.2.7 (TSR Section 5.5.7).

This DF will be inspected to confirm continued Operability per the In Service Inspection Program.

5.8 INTERFACE WITH TECHNICAL SAFETY REQUIREMENTS FROM OTHER FACILITIES

The WIPP has no interfacing TSRs from other facilities. This DSA credits the IC that Waste transported to WIPP complies with the limits, controls, and restrictions of the WIPP WAC (DOE/WIPP 02-3122). Generator sites are responsible for meeting the requirements imposed by the WIPP WAC before shipment of Waste to the WIPP facility (DSA Chapter 18.0). LCO 3.7.1 defines actions to evaluate and respond to a potential noncompliant Waste Container.

5.9 REFERENCES

10 CFR 71, “Packaging and Transportation of Radioactive Material,” *Code of Federal Regulations*, U.S. Government Printing Office, Washington, DC.

10 CFR 71, “Packaging and Transportation of Radioactive Material,” Section 71.47, “External Radiation Standards for all Packages,” *Code of Federal Regulations*, U.S. Government Printing Office, Washington, DC.

10 CFR 71, “Packaging and Transportation of Radioactive Material,” Section 71.71, “Normal Conditions of Transport,” *Code of Federal Regulations*, U.S. Government Printing Office, Washington, DC.

10 CFR 71, “Packaging and Transportation of Radioactive Material,” Section 71.73, “Hypothetical Accident Conditions,” *Code of Federal Regulations*, U.S. Government Printing Office, Washington, DC.

10 CFR 830, “Nuclear Safety Management,” *Code of Federal Regulations*, U.S. Government Printing Office, Washington, DC.

10 CFR 835, “Occupational Radiation Protection,” *Code of Federal Regulations*, U.S. Government Printing Office, Washington, DC.

10 CFR 851, “Worker Safety and Health Program,” *Code of Federal Regulations*, U.S. Government Printing Office, Washington, DC.

29 CFR 1910.1200, "Occupational Safety and Health Standards" Section 1910.1200, "Hazard Communication," *Code of Federal Regulations*, U.S. Government Printing Office, Washington, DC.

49 CFR 173, "Shippers - General Requirements for Shipments and Packagings," Subpart I, "Class 7 (Radioactive) Materials," *Code of Federal Regulations*, U.S. Government Printing Office, Washington, DC.

AIB Report, *Phase 1 Radiological Release Event at the Waste Isolation Pilot Plant on February 14, 2014*, April 2014, U.S. Department of Energy, Office of Environmental Management.

AIB Report, *Phase 2 Radiological Release Event at the Waste Isolation Pilot Plant on February 14, 2014*, April 2015, U.S. Department of Energy, Office of Environmental Management.

AIB Report, *Underground Salt Haul Truck Fire at the Waste Isolation Pilot Plant February 5, 2014*, March 2014, U.S. Department of Energy, Office of Environmental Management.

ANSI/UL 1254, *Standard for Pre-Engineered Dry Chemical Extinguishing System Units*.

ASME N510, *Testing of Nuclear Air Treatment Systems*, December 2007, American Society of Mechanical Engineers,

ASTM A240, 2015, *Standard Specification for Chromium, and Chromium-Nickel, Stainless Steel Plate, Sheet, and Strip for Pressure Vessels and for General Applications*, ASTM International West Conshohocken, PA.

CALC 15-029, *Loop Accuracy for a New Differential Pressure Transmitter at Bulkhead 308 Rev. 1*, Revision 1, February 2016, Nuclear Waste Partnership LLC, Carlsbad, NM.

CALC 16-007, *Room and HEPA Instrument Uncertainty*, Revision 2, April 2016, Nuclear Waste Partnership LLC, Carlsbad, NM.

CALC 16-008, *Uncertainty of Mechanical Gauges for Differential Pressure Measurement Across HEPA Filter Banks*), Revision 1, April 2016, Nuclear Waste Partnership LLC, Carlsbad, NM.

CALC 16-010, *Loop Uncertainty Accuracy for a New Differential Pressure Indicator at Bulkhead 309*, Revision 1, April 2016, Waste Isolation Pilot Plant Carlsbad Field Office, Carlsbad, NM.

CCP-PO-001, *CCP Transuranic Waste Characterization Quality Assurance Project Plan*, Current Revision, NWP, Carlsbad, NM.

CS-45-D-481, *Seismic Analysis of Support Building*, Revision 0, November 1983 (included in SDD CF00– GC00, listed below.

D-76-D01, *Design Basis*, Revision 8, December 1982.

DN-5390-29, Memorandum, Keith Wallace to Jill Farnsworth, NWP, *Modeling UVFS/IVS Fan Configuration with Various NVPs and Upset Conditions*, Revision 4, April 2016, Mine Ventilation Services, Inc., Clovis, CA.

DOE/CBFO-94-1012, U.S. Department of Energy. *Quality Assurance Program Document*, Carlsbad, New Mexico, Carlsbad Field Office, U.S. Department of Energy.

DOE Guide 421.1-2A, *Implementation Guide for Use in Developing Documented Safety Analyses to Meet Subpart B of 10 CFR 830*, December 2011, U.S. Department of Energy, Washington, DC.

DOE Guide 423.1-1B, *Implementation Guide for Use in Developing Technical Safety Requirements*, March 2015, U.S. Department of Energy, Washington, DC.

DOE-HDBK-1169-2003, *DOE Handbook Nuclear Air Cleaning Handbook*, December 2003, U.S. Department of Energy, Washington, DC.

DOE Order 151.1C, *Comprehensive Emergency Management System*, November 2005, Department of Energy, Washington, DC.

DOE Order 420.1C, Chg 1, *Facility Safety*, December 2012, U.S. Department of Energy, Washington, DC.

DOE Order 422.1, Chg 2, *Conduct of Operations*, June 2010, U.S. Department of Energy, Washington, DC.

DOE Order 426.2, *Personnel Selection, Training, Qualification, and Certification Requirements for DOE Nuclear Facilities*, April 2010, U.S. Department of Energy, Washington, DC.

DOE Order 433.1B, *Maintenance Management Program for DOE Nuclear Facilities*, April 2010, U.S. Department of Energy, Washington, DC, Affected Areas.

DOE-STD-1186-2004, *Specific Administrative Controls*, August 2004, U.S. Department of Energy, Washington, DC.

DOE-STD-3009-2014, *Preparation of Nonreactor Nuclear Facility Documented Safety Analysis*, November 2014, U.S. Department of Energy, Washington, DC.

ETO-H-228, *Evaluation of the Stopping Distance of a Descending Waste Shaft Conveyance Utilizing Two Brake Units*, October 2015, Nuclear Waste Partnership LLC, Carlsbad, NM.

ETO-Z-157, Revision 2, *Fire Protection Engineering Determination of Underground Diesel Powered Equipment that Require Automatic Fire Suppression System Installation and Underground Equipment Evaluated as NOT Requiring Automatic Fire Suppression System Installation*, Nuclear Waste Partnership LLC, Carlsbad, NM.

ETO-Z-229, Revision 1, *Fire Pump Discharge Required to Operate WHB 5th Floor Sprinkler System*, February 2016, Nuclear Waste Partnership LLC, Carlsbad, NM.

ETO-Z-230, Revision 2, *LCO 3.1.1 Set Point Determination Calculation*, April 2016, Nuclear Waste Partnership LLC, Carlsbad, NM.

ETO-Z-244, Revision 0, *Structural Evaluation of Support Building Integrity When Subjected to 27 psf Snow Load*, Nuclear Waste Partnership LLC, Carlsbad, NM.

ETO-Z-269, *Engineering Recommendations on how to Perform Air Flow Volume Readings in the WIPP Underground*, Revision 1, March 2016, Waste Partnership LLC, Carlsbad, NM.

HWFP, *Waste Isolation Pilot Plant Hazardous Waste Facility Permit* NM4890139088-TSDF (current revision), New Mexico Environment Department, Santa Fe, NM.

Manufacturer's Manual M1128, *Installation, Operating, and Maintenance Instructions for Disc Brake Caliper Type VS MK2*, Issue 2.

NFPA 13, *Standard for Installation of Sprinkler Systems*, 1983 and 2013 Edition, National Fire Protection Association, Quincy, MA.

NFPA 17, *Standard for Dry Chemical Extinguishing Systems*, 2013 Edition, National Fire Protection Association, Quincy, MA.

NFPA 20, *Standard for the Installation of Stationary Pumps for Fire Protection*, 1983 Edition, National Fire Protection Association, Quincy, MA.

NFPA 25, *Standard for the Inspection, Testing, and Maintenance of Water-Based Fire Protection Systems*, 2014 Edition, National Fire Protection Association, Quincy, MA.

NFPA 122, *Standard for Fire Prevention and Control in Metal/Nonmetal Mining and Metal Mineral Processing Facilities*, National Fire Protection Association, Quincy, MA.

NFPA 220, *Standard on Types of Building Construction*, 2006 Edition, National Fire Protection Association, Quincy, MA.

NFPA 291, *Recommended Practice for Fire Flow Testing and Marking of Hydrants*, 2016 Edition, National Fire Protection Association, Quincy, MA.

SDD AU00, *Underground Facilities and Equipment (AU00) System Design Description*, December 2013, Nuclear Waste Partnership LLC, Carlsbad, NM.

SDD CF00–GC00, *Plant Buildings, Facilities, and Miscellaneous Equipment System Design Description (SDD)*, December 2013, Nuclear Waste Partnership LLC, Carlsbad, NM.

SDD FP00, *Fire Protection System (FP00) System Design Description (SDD)*, Nuclear Waste Partnership LLC, Carlsbad, NM.

SDD FP01, *Fire Water Supply and Distribution System*, Nuclear Waste Partnership LLC, Carlsbad, NM.

SDD FP02, *Fire Suppression System*, Nuclear Waste Partnership LLC, Carlsbad, NM.

SDD HV00, *Heating, Ventilation and Air Conditioning System (HV00) System Design Description (SDD)*, December 2014, Nuclear Waste Partnership LLC, Carlsbad, NM.

SDD UH00, *Underground Hoisting System Design Description*, December 2013, Nuclear Waste Partnership LLC, Carlsbad, NM.

SDD VU00, *Underground Ventilation System Design Description*, (current revision), Nuclear Waste Partnership LLC, Carlsbad, NM.

SDD WD00, *Water Distribution System (WD00) System Design Description (SDD)*, January 2014, Nuclear Waste Partnership LLC, Carlsbad, NM.

SDD WH00, *Waste Handling System, System Design Description (SDD),* December 2013, Nuclear Waste Partnership LLC, Carlsbad, NM.

WHB Vehicle Barriers, Drawing 24-Z-044-W1, (current revision), Nuclear Waste Partnership LLC, Carlsbad, NM.

WIPP-016, *Nuclear Criticality Safety Evaluation for Contact-handled Transuranic Waste at the Waste Isolation Pilot Plant,* current Revision, Nuclear Waste Partnership LLC, Carlsbad, NM.

WIPP-020, *Nuclear Criticality Safety Evaluation for Remote-handled Waste at the Waste Isolation Pilot Plant*, current Revision, Nuclear Waste Partnership LLC, Carlsbad, NM.

WIPP-021, Revision 6, *Hazards Analysis for the Waste Isolation Pilot Plant Transuranic Waste Handling Safety Basis*, April 2016, Nuclear Waste Partnership LLC, Carlsbad, NM.

WIPP-023, Revision 7, *Fire Hazard Analysis for the Waste Isolation Pilot Plant,* August 2015, Nuclear Waste Partnership LLC, Carlsbad, NM.

WIPP-058, Revision 2, *DSA Supporting Calculations, Fuel Spill, HEPA Filter Plugging, and Fire Compartment Over-Pressurization*, March 2016, Nuclear Waste Partnership LLC, Carlsbad, NM.

WP 13-1, Current Revision, *WIPP Quality Assurance Program Description*, Nuclear Waste Partnership LLC, Carlsbad, NM.

Table of Contents

6.0 PREVENTION OF INADVERTENT CRITICALITY 6-1
6.1 Introduction 6-1
6.2 Requirements 6-2
6.3 Criticality Concerns 6-3
6.4 Criticality Controls 6-3
6.4.1 Passive Design Features 6-3
6.4.2 Administrative Controls 6-4
6.4.3 WIPP Nuclear Criticality Safety Evaluation Conclusions 6-8
6.5 Criticality Safety Program 6-9
6.5.1 Criticality Safety Organization 6-10
6.5.2 Criticality Safety Plans and Procedures 6-11
6.5.3 Criticality Safety Training 6-12
6.5.4 Determination of Operational Nuclear Criticality Limits 6-12
6.5.5 Criticality Safety Inspections/Audits 6-12
6.5.6 Criticality Infraction Reporting and Follow-Up 6-13
6.6 Criticality Instrumentation 6-13
6.7 References 6-13

List of Tables

Table 6.4-1. Summary of Limits Imposed on CH Waste Containers 6-5
Table 6.4-2. Summary of Limits Imposed on RH Waste Containers 6-7
Table 6.5-1. Program References 6-9

This page intentionally left blank

6.0 PREVENTION OF INADVERTENT CRITICALITY

6.1 INTRODUCTION

This chapter summarizes the essential elements of the Nuclear Criticality Safety (NCS) Program for Contact-Handled (CH) and Remote-Handled (RH) Transuranic (TRU) Waste at the Waste Isolation Pilot Plant (WIPP) as it relates to facility safety per U.S. Department of Energy (DOE) Standard DOE-STD-3009-2014, *Preparation of Nonreactor Nuclear Facility Documented Safety Analysis*. The objectives of this chapter are to:

- Describe how the NCS Program ensures that operations with fissionable material remain subcritical under normal and credible abnormal conditions.
- Describe how the NCS Program meets applicable nuclear criticality standards identified.
- Describe the basis and analytical approach the facility uses for deriving operational criticality limits.
- Summarize the passive design features and Administrative Controls (ACs) used by the NCS Program.

The WIPP NCS Program is described in the *WIPP Nuclear Criticality Safety Program* (WP 12-NS.04) and requires that NCS Evaluations (NCSEs) be developed to analyze the activities involved in the handling and disposal of TRU Waste. The NCSEs for CH and RH TRU Waste are documented in the *Nuclear Criticality Safety Evaluation for Contact-handled Transuranic Waste at the Waste Isolation Pilot Plant* (WIPP-016) and the *Nuclear Criticality Safety Evaluation for Remote-handled Waste at the Waste Isolation Pilot Plant* (WIPP-020), respectively.

TRU Waste accepted for disposal at the WIPP facility is required to be characterized and certified to meet the requirements of the *Transuranic Waste Acceptance Criteria for the Waste Isolation Pilot Plant* (WIPP WAC) (DOE/WIPP 02-3122) prior to being approved for shipment to the WIPP. The flowdown of applicable requirements and associated criteria in the WIPP WAC are traceable to higher-tier documents, including this WIPP Documented Safety Analysis (DSA), the *Waste Isolation Pilot Plant Hazardous Waste Facility Permit* (HWFP), CH and RH Waste transportation requirements, the *Waste Isolation Pilot Plant Land Withdrawal Act of 1992* (LWA) (Public Law 102-579, et seq.), the "Criteria for the Certification and Recertification of the Waste Isolation Pilot Plant's Compliance with the Disposal Regulations: Recertification Decision" (71 FR 68), and other approvals discussed in the WIPP WAC.

The WIPP WAC applies to generator sites that ship waste to the WIPP facility for disposal and identifies fissile mass limits, special reflector/moderator mass limits, Waste Container types, and waste characteristics that have been approved for disposal at WIPP. The fissile mass limits in the WIPP WAC are derived from the CH and RH NCSEs identified (WIPP-016 and WIPP-020) and are specific to the WIPP Waste Handling, storage, and disposal configurations. The fissile mass limits for each container type and the Waste Handling, storage, and disposal configurations at WIPP ensure that the probability of an inadvertent criticality is Beyond Extremely Unlikely (BEU) (less than 10^{-6} per year) for normal and credible abnormal operations at the WIPP. The fissile mass limits are also examined in the contingency analysis for upset conditions appropriate to the WIPP facility and consistent, where appropriate, with the *Guidelines for Preparing Criticality Safety Evaluations at Department of Energy Nonreactor Nuclear* (DOE-STD-3007-2007) and *Preparation of Safety Basis Documents for Transuranic (TRU) Waste Facilities* (DOE-STD-5506-2007).

The fissile mass and associated uncertainty in containers shipped to WIPP is determined by Non-Destructive Analysis at the various generator sites and the statistical uncertainty of these measurements is reported to WIPP in transportation documents. The fissile mass shall include two times the statistical uncertainty in the measurement for comparison to the WIPP WAC limits.

No key elements (KEs) associated with the NCS Program resulted from WIPP-021, *Hazards Analysis for the Waste Isolation Pilot Plant Transuranic Waste Handling Safety Basis*.

For criticality safety analysis purposes, the key attributes (KAs) of the WIPP NCS Program described in this chapter are as follows:

- KA 6-1: A criticality safety program is maintained and implemented that addresses the requirements of DOE Order 420.1C, *Facility Safety*, and the applicable American National Standards Institute/American Nuclear Society (ANSI/ANS) standards as listed in WP 12-NS.04, *WIPP Nuclear Criticality Safety Program*.
- KA 6-2: Handling of fissile material under normal and credible abnormal conditions is evaluated in NCSEs. These evaluations also determine the limits, controls, and engineered features necessary to ensure that an acceptable margin of subcriticality is maintained.
- KA 6-3: Criticality controls developed are based on the results and conclusions from the NCSEs or other safety basis documents. Passive design features and ACs provide engineered features and rules for the safe handling of fissile material.
- KA 6-4: Operations are conducted such that at least two unlikely, independent, and concurrent changes (contingencies) in processing and/or operating conditions must occur for a criticality accident to be possible.
- KA 6-5: Personnel who prepare and independently review NCSEs for WIPP have the appropriate education and experience and are trained in accordance with a documented training program consistent with ANSI/ANS-8.26, *Criticality Safety Engineer Training and Qualification Program*.
- KA 6-6: Waste Handling personnel take the WIPP Criticality Safety Training module, which explains criticality safety fundamentals.

6.2 REQUIREMENTS

The regulations, standards, and DOE orders required for establishing the WIPP NCS Program include the following:

- Title 10 Code of Federal Regulations Part 830, “Nuclear Safety Management,” Subpart B, “Safety Basis Requirements” (10 CFR 830).
- DOE Order 420.1C, *Facility Safety*, Chapter III, “Nuclear Criticality Safety.”
- DOE Order 420.1C specifies the application of DOE orders and standards and consideration of ANSI/ANS standards as follows:
  - DOE-STD-3007-2007, *Guidelines for Preparing Criticality Safety Evaluations at DOE Nonreactor Nuclear Facilities.*
  - Applicable ANSI/ANS-8 standards as listed in WP 12-NS.04, *WIPP Nuclear Criticality Safety Program.*

6.3 CRITICALITY CONCERNS

The WIPP facility is a waste repository for the disposal of TRU and TRU mixed defense-related waste. The primary fissile material in the waste is plutonium-239. Although other TRU isotopes may be in the waste, they are identified in terms of fissile gram equivalent of plutonium-239. To ensure that the probability of an inadvertent criticality remains less than 10^{-6} per year (BEU) for the WIPP, fissile mass and reflector/moderator mass limits, determined through analysis, are specified for each container type acceptable for disposal at WIPP. Radiological, physical, and chemical properties of TRU Wastes received at the WIPP are described in the WIPP WAC (DOE/WIPP 02-3122). The fissile mass limits for each container type to be disposed of at WIPP are discussed in Section 6.4.2. These limits are implemented at the waste shipping sites through adherence to the WIPP WAC.

Fissile material in TRU Waste received at the WIPP is handled at the surface in the Waste Handling Building (WHB) and in Underground (UG) disposal rooms as described in Section 6.4.1. The UG disposal configuration places RH Waste Canisters into horizontal boreholes in the walls of the disposal rooms, nominally placed on an 8-foot center-to-center spacing. The RH emplacement in boreholes is completed before CH Waste assemblies are placed in front of those boreholes. The reflection provided by the salt surrounding the canister and the concrete shield plug tend to increase reactivity in an RH Waste Canister by preventing the escape of neutrons. The CH disposal array is configured as columns of Waste Containers in the disposal rooms in a nested hexagonal lattice as described in Chapter 2.0. Magnesium oxide (MgO) may be placed on top of CH Waste columns. The salt and MgO are reflective and result in the reactivity of the disposal array being higher than if the waste had more open space surrounding the containers.

6.4 CRITICALITY CONTROLS

Waste Handling configurations associated with CH and RH Waste were evaluated in WIPP-016 and WIPP-020, respectively. The NCSEs evaluated both CH and RH Waste to ensure that the entire processes will remain subcritical under normal and credible abnormal conditions per DOE Order 420.1C. Additionally, the NCSEs conclude that a criticality accident is not credible at the WIPP. The analyses consider plutonium-239 fissile mass and geometry, moderation, and reflection conditions, in addition to Waste Container types and storage and disposal configurations, including worst-case reflector materials. Both passive design features and ACs have been determined based on the analyses to ensure that the probability of an inadvertent criticality at WIPP remains less than 10^{-6} per year (BEU). The primary criticality safety control for the WIPP is that waste approved for disposal meet limits specified in the WIPP WAC (DOE/WIPP 02-3122). The WIPP WAC is implemented at generator sites. As such, the waste is treated as a government-furnished supply.

6.4.1 Passive Design Features

Passive design features identified in the NCSEs for CH and RH Waste Containers are described separately below. The engineering change order process, described in *Engineering and Design Document Preparation and Change Control* (WP 09-CN3007), controls modifications to the WIPP Structures, Systems, and Components (SSCs) including the waste storage and disposal configurations, disposal room dimensions, and container types. Design changes are required to be evaluated for the Unreviewed Safety Question (USQ) process through the *Unreviewed Safety Question Determination* (WP 02-AR3001) procedure.

- **Passive NCSE design features for CH Waste Containers:** CH Waste Containers disposed of at WIPP include 55-, 85-, and 100-gallon drums, Standard Waste Boxes (SWBs), Standard Large

Box 2s (SLB2s), 10-drum Overpacks (TDOPs), Pipe Overpack Containers, Criticality Control Overpacks, and shielded containers. The Pipe Overpack Container refers to a 6- or 12-inch pipe component overpacked in a 55-gallon drum surrounded by packing material to keep the pipe component centrally located in the drum. The Criticality Control Overpacks refers to a 6-inch pipe component overpacked in a 55-gallon drum with plywood rings at the top and bottom to keep the pipe component centrally located in the drum. Waste drums are assembled into seven-packs of 55-gallon drums, four-packs of 85-gallon drums, three-packs of 100-gallon drums, or three-packs of shielded containers.

The Waste Container type is the design feature that provides spacing between the fissile contents of the TRU Waste. All containers currently approved for shipment to the WIPP in the Transuranic Package Transporter Model II (TRUPACT-II), Half-package Transporter (HalfPACT), or Transuranic Package Transporter Model III (TRUPACT-III) shipping containers have been evaluated.

- **Passive NCSE design features for RH Waste Containers:** RH Waste at the WIPP is packaged in a Waste Canister that is then placed in a disposal borehole in the UG. RH Waste is shipped to the WIPP in U.S. Nuclear Regulatory Commission (NRC) Type B certified shipping containers (RH-TRU 72-B and 10-160B). The RH-TRU 72-B shipping container holds one RH Waste Canister. The RH Waste Canister can either be direct loaded or contain up to three drums. RH Waste Canisters include the NS15, NS30, and the RH-TRU 72-B. The 10-160B shipping container is designed to hold ten 30- or 55-gallon waste drums that remain in the shipping container until it is moved to a shielded facility in the RH Bay of the WHB.

  The robustness of the RH Waste Canister is a passive design feature identified in the NCSE because these canisters reduce fissile material releases due to loss of confinement and fire scenarios.

6.4.2 Administrative Controls

ACs identified for CH and RH Waste Containers are described separately below. A waste characterization and certification program at generator sites ensures that only waste that meets the WIPP WAC (DOE/WIPP 02-3122) is disposed of at the WIPP. Changes to CH or RH Waste Containers, waste characteristics, fissile content, moderator or reflector content, or disposal configurations in the Waste Container or external to the containers that would alter assumptions in the criticality safety evaluations are evaluated through NCSEs and/or the USQ process (WP 02-AR3001), as appropriate, prior to implementation. New controls specific to fissile mass or moderator/reflector content by container type are specified in a change to the WIPP WAC. Any new controls related to waste storage, handling, or disposal configurations are specified in changes to the Waste Handling procedures. Controls for reviewing and approving changes to processes or system configurations are as described for passive design features in Section 6.4.1.

- **ACs for CH Waste Containers**: CH Waste is verified using non-destructive assay techniques including uncertainty for fissile mass at the generator sites to meet the WIPP WAC, which contains the limits in Table 6.4-1, prior to being accepted for shipment to WIPP. CH Waste Containers acceptable for disposal at WIPP include 55-, 85-, or 100-gallon drums; SWBs; SLB2s; TDOPs; Criticality Control Overpacks; Standard, S100, S200, and S300 Pipe Overpack Containers contained within a 55-gallon drum; and shielded containers. CH Waste Containers are made of steel. Container arrays are limited to three tiers, where a drum or SWB occupies one tier and an SLB2 or TDOP occupies two tiers. If onsite overpacking is required, all one-to-one overpacking configurations shall maintain the appropriate limit(s) of the smaller overpacked

container from Table 6.4-1. All multiple-to-one overpacking configurations from Table 6.4-1 shall maintain the appropriate limit(s) of the larger overpacking container from Table 6.4-1. Loose material around the overpacked container(s) shall not be placed into the overpacking container.

- **Administrative Controls for RH Waste Containers**: RH Waste is verified using non-destructive assay techniques including uncertainty for fissile mass at the generator sites to meet the WIPP WAC, which contains the limits in Table 6.4-2, prior to being accepted for shipment to WIPP.

  A maximum of twelve 30-gallon and/or 55-gallon drums, loose or in canisters, shall be present in the upper hot cell. Note: Stacking of the drums is not restricted and spacing between drums or canisters is not required. A maximum of three drums are loaded into a RH Waste Canister. RH Waste Canisters and drums are made of steel.

  The boreholes for disposal of RH Waste in the UG shall not be placed closer than 30 inches center-to-center.

Table 6.4-1. Summary of Limits Imposed on CH Waste Containers

Container Type	Fissile Mass Limit [a]	Container Geometry Requirements	Non-fissile Material Limits
Non-compacted Waste Containing ≤ 1 wt% of Waste Special Reflectors (Direct Loaded or Overpack)			
55-gallon (excluding Pipe Overpack Containers and Criticality Control Overpacks), 85-gallon, and 100-gallon drums	≤ 200 FGE per drum ≤ 650 FGE per pack [a, e]	None	Special reflector mass ≤1 wt%
SWB, SLB2, or TDOP	≤ 325 FGE with 0 g plutonium-240 ≤ 340 FGE with 5 g plutonium-240 ≤ 360 FGE with 15 g plutonium-240 ≤ 380 FGE with 25 g plutonium-240	None	Special reflector mass ≤ 1 wt%
Pipe Overpack Container	≤ 200 FGE per pipe component	Applies to standard, S100, S200, and S300 Pipe Overpack Containers per App 1.3.1 of TRUPACT-II SAR [c]	Special reflector mass ≤ 1 wt%
Shielded container	≤ 200 FGE per shielded container	None	Special reflector mass ≤ 1 wt%
Criticality Control Overpack	≤ 380 FGE per container	None	Special reflector mass ≤ 1 wt%

Container Type	Fissile Mass Limit [a]	Container Geometry Requirements	Non-fissile Material Limits
Non-Compacted Waste Containing > 1 wt% of Waste Special Reflectors (Direct loaded or Overpack)			
55-gallon (excluding Pipe Overpack Containers), 85-gallon, and 100-gallon drums	≤ 100 FGE per drum ≤ 700 FGE per pack [e]	None	Special reflector mass ≤ 100 kilograms per drum
SWB or TDOP	≤ 100 FGE	None	None
Pipe Overpack Container	≤ 140 FGE per pipe component	Applies to standard, S100, S200, and S300 Pipe Overpack Containers per App 1.3.1 of TRUPACT-II SAR [b]	None
Machine-Compacted Waste [c]			
Fully compacted waste in 55-, 85-, and 100-gallon drums without design vertical spacing	≤ 170 FGE per drum ≤ 600 FGE per pack [a, e]	None	Special reflector mass ≤ 1 wt% of waste per drum
Fully compacted waste in 55-, 85-, and 100-gallon drums with design vertical spacing	≤ 200 FGE per drum ≤ 600 FGE per pack [a, e]	Minimum 0.5-inch spacing [d] between drum content and exterior top and bottom must be maintained, even if a smaller drum were placed on top of the drum	Special reflector mass ≤ 1 wt% of waste
Fully compacted waste in a shielded container – direct load, vented 30-gallon inner metal drum	≤ 200 FGE per shielded container ≤ 600 FGE per 3-pack	None	Special reflector mass ≤ 1 wt%
Partially compacted waste in 55-gallon (excluding Pipe Overpack Containers and Criticality Control Overpacks), 85-gallon, or 100-gallon drums	≤ 200 FGE per drum ≤ 600 FGE per pack [a, e]	None	Packing fraction of drum contents ≤ 70% Special reflector ≤ 1 wt% of waste
Fully compacted waste in 55-, 85-, and 100-gallon drums with design vertical spacing overpacked in SWB or TDOP (no loose material in the SWB or TDOP)	≤ 200 FGE per drum 1 drum per SWB or TDOP	Minimum 0.5-inch spacing [d] between drum content and exterior top and bottom must be maintained	Special reflector mass ≤ 1 wt% of waste
Partially compacted waste in 55-, 85-, and 100-gallon drums overpacked in SWB or TDOP (no loose material in the SWB or TDOP)	≤ 200 FGE per drum 1 drum per SWB or TDOP	None	Packing fraction of drum contents ≤ 70% Special reflector mass ≤ 1 wt% of waste

Container Type	Fissile Mass Limit [a]	Container Geometry Requirements	Non-fissile Material Limits
Fully compacted waste in 100-gallon drum with design vertical spacing overpacked in an SWB or TDOP	≤ 250 FGE per inner drum 1 drum per SWB or TDOP	Minimum 0.75-inch void spacing between drum content and exterior top and minimum 0.5-inch spacing between drum content and exterior bottom; drum must have a 16-gauge drum outer lid and bottom and an inner/recessed 16-gauge steel lid	Special reflector mass ≤ 1 wt% of waste
Fully compacted waste in SWB or TDOP containers without limitation on inner configuration	≤ 185 FGE per SWB or TDOP	None	Special reflector mass ≤ 1 wt% of waste

wt% = percent by weight; FGE = fissile gram equivalent; g = grams; SAR = Safety Analysis Report

a Fissile mass shall include 2 times the statistical uncertainty in the measurement.

b *TRUPACT-II Safety Analysis Report* (DOE/CBFO 2009).

c The limit for polyethylene density for non-compacted waste and partially (machine) compacted waste is ≤ 70%; and for fully compacted waste is > 70%.

d 0.5-inch spacing modeled for 85- and 100-gallon drums, whereas only 0.3-inch spacing was modeled for 55-gallon drums. Requirement set at largest value of 0.5 inches for all cases for consistency.

e Pack is defined as a 7-pack of 55-gallon drums, a 4-pack of 85-gallon drums, or a 3-pack of 100-gallon drums.

Table 6.4-2. Summary of Limits Imposed on RH Waste Containers

Waste Type [a]	Fissile Mass Limit [b]	Container Geometry Requirements	Non-Fissile Material Limits
RH-TRU 72-B Waste Canisters shall comply with the limits in one of the following rows [c]:			
Non-compacted	≤ 325 FGE per canister	None	Special reflector [d] mass ≤ 1 wt% of waste
Non-compacted	≤ 350 FGE per canister with a minimum of 15 g plutonium-240	None	Special reflector [d] mass ≤ 1 wt% of waste
Non-compacted	≤ 370 FGE per canister with a minimum of 25 g plutonium-240	None	Special reflector [d] mass ≤ 1 wt% of waste
Non-compacted	≤ 100 FGE per canister	None	Unlimited special reflector [d] mass
Non-compacted	≤ 305 FGE per canister	None	Unlimited special reflector [d] mass provided it is mechanically or chemically bound to the fissile material
Machine-compacted (compaction density not limited)	≤ 245 FGE per canister	None	Special reflector [d] mass ≤ 1 wt% of waste
Non-compacted	Unlimited uranium provided enrichment is ≤ 0.96 wt% fissile equivalent mass	None	Unlimited special reflector [d]

Waste Type [a]	Fissile Mass Limit [b]	Container Geometry Requirements	Non-Fissile Material Limits
NS15 and NS30 Waste Canisters shall comply with the limits in one of the following rows:			
Non-compacted	≤ 245 FGE per canister	None	Special reflector mass [d] ≤ 1 wt% of waste
Machine Compacted	≤ 245 FGE per canister	None	Special reflector mass [d] ≤ 1 wt% of waste
Individual 30- or 55-gallon drums shipped in a 10-160B to WIPP shall comply with the limits in one of the following rows [e]:			
Non-compacted	≤ 200 FGE per drum	None	Special reflector mass [d] ≤ 1 wt%
Non-compacted	≤ 100 FGE per drum	None	Unlimited special reflector [d] mass
Non-compacted	≤ 120 FGE per drum	None	Unlimited graphite with other special reflector [d] mass ≤ 1 wt%
Machine compacted (compaction density not limited)	≤ 200 FGE per drum	1.0-inch design spacing between drum content and exterior top and bottom must be maintained	Special reflector [d] mass ≤ 1 wt% of waste
Machine compacted (compaction density not limited)	≤ 170 FGE per drum	None	Special reflector [d] mass ≤ 1 wt% of waste

FGE = fissile gram equivalent; wt% = percent by weight; g = grams

a The limit for polyethylene density for non-compacted waste is < 20% of the theoretical value and > 20% for machine-compacted waste.

b Includes 2 times the statistical uncertainty in the measurement.

c These limits are equivalent to or higher than those given in the *Safety Analysis Report for the RH-TRU 72-B Waste Shipping Package* (DOE/CBFO 2010). Waste may be direct loaded in the RH-TRU 72-B canister, or in drums, including lead-lined drums, provided these limits are met for the RH-TRU 72-B canister payload.

d Applies to beryllium and graphite.

e A maximum of three drums meeting these limits shall be loaded into a RH Waste Canister.

6.4.3 WIPP Nuclear Criticality Safety Evaluation Conclusions

The NCSEs analyze and document that there are sufficient factors of safety to establish that the probability of an inadvertent criticality is less than 10^{-6} per year (BEU). No single credible event or failure results in the potential for a criticality accident. Waste proposed for disposal at WIPP must meet the WIPP WAC (DOE/WIPP 02-3122) prior to being approved for shipment to the WIPP facility. Further, the TRUPACT-II, HalfPACT, TRUPACT-III, and RH-TRU 72-B shipping containers have fissile mass limits that apply to the entire shipment. The fissile mass limits per container for the WIPP disposal set in the NCSEs are equal to or higher than the container mass limits allowed in the shipping containers, such that containers that meet the shipping requirements can be received, handled, and disposed of at WIPP. Unless Waste Containers are contaminated such that overpacking is necessary, containers are not altered and are emplaced as they are received. Contingencies included in the NCSEs were developed based on upset conditions appropriate to the WIPP Waste Handling, storage, and disposal configurations and are consistent, where appropriate, with DOE-STD-3007-2007. Contingencies include the following:

- Exceeding the container stacking limits.
- Exceeding the fissile mass or moderator/reflector mass limits in the Waste Containers.

- Loss of geometry due to failure of the Waste Hoist Brakes.
- Compaction of Waste Containers due to roof fall in the UG or collision.
- Sprinkler activation and fire fighting in WHB or water intrusion into the Waste Containers.
- Overbatching during overpacking.
- Loss of interaction control with RH Waste Containers.
- Excess liquid in Waste Containers.
- Ejection of material from drum.
- Natural phenomena events.

For each credible contingency, the resulting configuration is shown to remain subcritical, such that additional controls (ACs or design features) are not required.

6.5 CRITICALITY SAFETY PROGRAM

The *WIPP Nuclear Criticality Safety Program* (WP 12-NS.04) is structured to meet the requirements of DOE Order 420.1C, and comply with the ANSI/ANS NCS standards applicable to the WIPP facility. This section presents an overview of the WIPP NCS Program, including the following:

- Organizational structure.
- Criticality safety plans and procedures.
- Criticality safety training.
- Determination of operational nuclear criticality limits.
- Criticality safety inspections and audits.
- Criticality infraction reporting.
- Follow-up.

Program documents referenced in this chapter are summarized in Table 6.5-1.

Table 6.5-1. Program References

Document Number	Title
WP 12-NS.04	*WIPP Nuclear Criticality Safety Program*
WP 09-CN3007	*Engineering and Design Document Preparation and Change Control*
WP 02-AR3001	*Unreviewed Safety Question Determination*
WP 05-WH1025	*CH Waste Downloading and Emplacement*
WP 05-WH1710	*72-B RH Processing*
WP 12-ES3918	*Reporting Occurrences in Accordance with DOE Order 232.2*
WP 12-ER3903	*Termination, Reentry, and Recovery*
WP 12-FP3003	*Combustible Loading Controls for the Waste Handling Building and Underground*
WP 15-PA.01	*Operating Experience / Lessons Learned Program*

6.5.1 Criticality Safety Organization

The WIPP NCS Program is described in WP 12-NS.04 and is maintained by the Nuclear Safety Organization. ANSI/ANS-8.1, *Nuclear Criticality Safety in Operations with Fissionable Materials Outside Reactors*, and ANSI/ANS-8.19, *Administrative Practices for Nuclear Criticality Safety*, require management to clearly establish responsibility for NCS. Primary WIPP organizations and personnel responsible for implementation of the Criticality Safety Program include the Nuclear Waste Partnership LLC (NWP) president and project manager, DOE Carlsbad Field Office (CBFO), Nuclear Safety, Waste Handling Operations, Engineering, Quality Assurance (QA), Transportation Packaging, and Technical Training. Responsibilities for each of these are summarized below. There are no institutionalized committees at WIPP that address criticality safety issues.

- The NWP president and project manager ensures that personnel who identify the necessary criticality safety requirements are, to the extent practicable, administratively independent of process supervisors. The NWP president and project manager ensures that the Nuclear Safety Organization is staffed with personnel skilled in the interpretation of data pertinent to criticality safety and familiar with facility operation. Additional information concerning the NWP organization structure and staffing is provided in Chapter 17.0.
- The DOE CBFO ensures that the TRU Waste accepted for disposal at the WIPP complies with HWFP and applicable laws and regulations as described in the current revision of the WIPP WAC (DOE/WIPP 02-3122); allocating sufficient budget to perform the necessary criticality safety analyses for WIPP; and ensuring that new operations, changes in the WIPP WAC, changes in waste packaging, changes in fissile gram content of disposed containers, and/or changes in special moderating or reflection material in the waste are evaluated for criticality safety prior to implementing the change.
- The Nuclear Safety organization maintains the WIPP NCS Program and performs annual assessments to verify that criticality safety controls at the WIPP are being implemented. The NCSEs implemented at the WIPP are prepared and independently reviewed by personnel knowledgeable in NCS, as described in Section 6.5.3. Nuclear Safety ensures that personnel who prepare and independently review NCSEs for the WIPP have the appropriate education and experience and are trained in accordance with a documented training program consistent with ANSI/ANS-8.26.
- The Nuclear Safety organization reviews changes to WIPP SARs for packaging, the WIPP WAC, the *Waste Data System User's Manual* (DOE/WIPP 09-3427), procedures for Waste Handling at the WIPP, and facility design changes for impacts on criticality. Nuclear Safety assists industrial safety, operations, and engineering personnel in developing specific recovery plans in the event that a criticality safety noncompliance has occurred. The Nuclear Safety organization assists Technical Training in the development of criticality training for WIPP personnel.
- The WIPP Waste Operations organization ensures that the Waste Handling procedures reflect the Waste Container storage and disposal configurations. The configurations are assumptions of the CH and RH NCSEs. WIPP Waste Operations also ensures that personnel access to areas where fissile material is handled, stored, or disposed of is controlled. WIPP Waste Operations ensures that the Waste Containers received for disposal at WIPP match the waste approved for receipt as identified in the WIPP Waste Data System (WDS). Personnel and their supervisors who are involved in Waste Handling receive criticality safety training. Ultimately Operations personnel are responsible for criticality safety in their work area.
- The WIPP Engineering organization ensures that engineered items important to criticality safety, as identified in this DSA, are under configuration management and ensures that design for or

modification to the Waste Containers, surface waste storage locations, disposal area configurations, backfill material, and Waste Handling equipment is reviewed through the USQ process prior to implementing the change. Control of engineering design is discussed in Chapter 14.0.

- The WIPP QA organization assesses site organizations to ensure that criticality safety requirements are being implemented.
- The National TRU Program Transportation Packaging organization ensures that changes to waste forms, changes in container fissile mass limits, and new or modified Waste Containers receive a USQ evaluation prior to implementing the changes in the WIPP WAC (DOE/WIPP 02-3122). The Transportation Packaging and Nuclear Safety organizations interface frequently with the DOE CBFO to address any concerns or additional controls for new waste forms.
- Technical Training maintains a criticality safety training program for the WIPP personnel who implement criticality controls.

6.5.2 Criticality Safety Plans and Procedures

The primary method for ensuring criticality safety at the WIPP is adhering to the fissile mass and moderator/reflector limits in the Waste Containers approved for disposal at the WIPP as specified in the WIPP WAC (DOE/WIPP 02-3122). Each generator site has a program for characterization and certification of the waste proposed for disposal at the WIPP and demonstrates compliance with the WIPP WAC through the Performance Demonstration Program described in the *Performance Demonstration Program Management Plan* (DOE/CBFO 01-3107). The WIPP facility does not accept Waste Container shipments for disposal if the Waste Container information has not been submitted into the WDS and approved by the WDS Data Administrator. The process for submitting waste information into the WDS is described in the user's manual (DOE/WIPP 09-3427). The WDS is programmed to include the fissile mass limits for each container type from the WIPP WAC such that the requirements for each container type are verified prior to shipment to WIPP.

Once waste arrives at WIPP, the containers are checked to verify that they match those approved for shipment in the WDS. WIPP does not perform additional verification of fissile content and has no assay equipment onsite to do so. Storage and disposal configurations for Waste Containers that have been removed from the shipping container are described in the Waste Handling procedures.

Because NCSEs have shown that criticality at WIPP is not credible and thus poses a trivial risk, no Criticality Accident Alarm Systems are necessary at the WIPP. No criticality safety postings are used or are necessary. There are no evacuation plans specific to an inadvertent criticality. In the event that an unusual event happens during Waste Handling, personnel are trained to stop and evacuate the area.

There are no restrictions on firefighting associated with Waste Handling and disposal activities. There is a wet-pipe sprinkler system in the WHB and Waste Hoist Tower. There are no fire suppression systems (FSSs) in the disposal path and disposal rooms in the UG other than the installed chemical FSSs and handheld fire extinguishers on the UG Waste Handling equipment. The likelihood of fires is minimized through a combustible loading control program for both the WHB and UG disposal Transport Path and active disposal rooms. The Combustible Loading Control Program is implemented through WP 12-FP3003 and is further discussed in Chapter 11.0.

Document control measures employed at the WIPP ensure that documents and procedures, including changes, are reviewed for adequacy, approved for release by authorized personnel, and distributed to and used at the locations where fissile materials are used, stored, and disposed. Changes to procedures that

impact nuclear safety or change facility processes described in this DSA are reviewed through the USQ process. The procedure and document control processes are described in Chapters 12.0 and 14.0. Changes to the WIPP facility, including designs that may impact criticality safety, are controlled through WP 09-CN3007, as described in Section 6.4.

6.5.3 Criticality Safety Training

The Nuclear Safety organization ensures that personnel who prepare and independently review NCSEs for the WIPP have the appropriate education and experience. The Nuclear Safety organization ensures personnel are trained in accordance with a documented training program that emphasizes parameters important to NCS consistent with ANSI/ANS-8.26.

The WIPP has a Criticality Safety Training module available for WIPP personnel. Waste Handling personnel are required to take the training module, which explains both criticality safety fundamentals, including fissile mass, geometry, reflection and moderation, and the ACs that must be met by Waste Handling personnel. This training includes the criticality safety relevance of the storage and disposal configuration and the effects of fissile mass, geometry, reflection, and moderation.

6.5.4 Determination of Operational Nuclear Criticality Limits

The NCSEs for WIPP are developed in accordance with the requirements of DOE-STD-3007-2007. Calculations performed in the current NCSEs for WIPP have been prepared using the Monte Carlo N-Particle computer code. The software used for NCSE calculations is controlled and includes bias validation as required by ANSI/ANS-8.24, *Validation of Neutron Transport Methods for Nuclear Criticality Safety Calculations*. The analytical process includes establishing the upper subcritical limit for the proposed operation and demonstrating that the operation remains subcritical for all normal and credible abnormal operations. The NCSEs consider fissile mass, geometry, moderation, and reflection Waste Container types; storage and disposal configurations; and material properties.

The NCSEs evaluate normal and credible abnormal operations, including exceeding fissile or moderator/reflector mass limits in a Waste Container, exceeding stacking configurations, loss of fissile material confinement, compaction of the CH Waste due to roof fall in the disposal array or salt creep or a forklift accident, inadvertent initiation of the WHB FSS, and loss of interaction between RH Waste Containers. The NCSEs for WIPP identify the minimum subcritical margin for the waste storage and disposal operations. To ensure that the probability of an inadvertent criticality remains incredible for WIPP, the fissile and reflector/moderator limits for each container type are incorporated into the WIPP WAC (DOE/WIPP 02-3122).

NCSE documentation also includes bias development and validation for the computer code and hardware used in the preparation of the analysis.

6.5.5 Criticality Safety Inspections/Audits

Waste is certified to meet WIPP WAC (DOE/WIPP 02-3122) requirements prior to being approved for shipment to and disposal at the WIPP facility. The approval for waste to be disposed of at WIPP is documented in the WDS. Programs are in place to verify adherence to the WIPP WAC, which includes data validation and reviews of characterization documentation. At the WIPP, QA audits and departmental assessments are performed to verify adherence to the Waste Handling, the design change control, and the USQ procedure (WP 02-AR3001). Waste Handling operations are reviewed periodically by Nuclear Safety to verify that hot cell storage and stacking configurations for the surface and UG disposal

configurations are being adhered to and that process conditions have not been altered such that assumptions in the NCSEs are compromised. There are no specific criticality safety inspections identified for the WIPP because the audits and assessments are sufficient to ensure implementation of the necessary criticality safety requirements.

Characterization records are retained by the WIPP organizations that characterize waste and are ultimately transferred to the WIPP records center for long-term retention. Waste profiles, container types, fissile mass, disposal location, and other parameters are documented in the WDS database, which is a living document that changes as new waste is approved for disposal and disposed of at WIPP. Audit and assessment records are retained as specified on each implementing group's records identification document. Details of the NWP Records Management Program are described in Chapter 14.0.

6.5.6 Criticality Infraction Reporting and Follow-Up

While the probability of an inadvertent criticality at the WIPP is BEU, items that would constitute a criticality infraction include receipt, handling, and disposal of waste that exceeds the fissile and special reflector/moderator limits as specified in the WIPP WAC (DOE/WIPP 02-3122), stacking of CH Waste Containers more than three tiers high, or emplacing RH Waste in boreholes that are less than 30 inches center-to-center. Other items that could change assumptions in the NCSEs include changes in the Waste Handling and disposal configurations.

Infractions are reported in accordance with WP 12-ES3918. Event recoveries at WIPP are controlled by procedure WP 12-ER3903. Recovery from a criticality infraction may include performing an analysis based on the actual waste content, container type, and disposal location to determine whether the noncompliant container is bounded by the criticality safety analysis. Recovery could also include returning the noncompliant container to the generator site for remediation or segregating the noncompliant container from other waste. Should additional analysis be required, properly trained and qualified personnel perform the required criticality evaluations.

Corrective action following recovery from a criticality limit violation may include, but is not limited to, changes to the WDS, changes in criticality safety training, or changes to oversight of generator sites. WIPP uses occurrence reports generated under WP 12-ES3918 to incorporate lessons learned into training and future safety analyses. The Lessons Learned Program is controlled by WP 15-PA.01.

6.6 CRITICALITY INSTRUMENTATION

The WIPP NCSEs conclude that no credible criticality hazard exists at the WIPP facility for Waste Handling and disposal. The analyses further conclude that because no credible criticality scenarios exist for the WIPP, there is no need for a criticality detection system. There is no criticality related instrumentation required at the WIPP.

6.7 REFERENCES

10 CFR 830, "Nuclear Safety Management," Subpart B, "Safety Basis Requirements," *Code of Federal Regulations*. U.S. Government Printing Office, Washington, DC.

71 FR 68, 2006, "Criteria for the Certification and Recertification of the Waste Isolation Pilot Plant's Compliance with the Disposal Regulations: Recertification Decision," *Federal Register*, Vol. 71, No. 68, pp. 18010–18021. April 10, 2006.

ANSI/ANS-8.1, *Nuclear Criticality Safety in Operations with Fissionable Materials Outside Reactors*, Reaffirmed 2007, American National Standards Institute, Inc., Washington, DC.

ANSI/ANS-8.19, *Administrative Practices for Nuclear Criticality Safety*, American National Standards Institute, Inc., Washington, DC.

ANSI/ANS-8.24, *Validation of Neutron Transport Methods for Nuclear Criticality Safety Calculations*, Reaffirmed 2012, American National Standards Institute, Inc., Washington, DC.

ANSI/ANS-8.26, *Criticality Safety Engineer Training and Qualification Program*, American National Standards Institute, Inc., Washington, DC.

DOE/CBFO 01-3107, *Performance Demonstration Program Management Plan* (current revision), U.S. Department of Energy, Carlsbad Field Office, Carlsbad, NM.

DOE/CBFO 2009, *TRUPACT-II Safety Analysis Report*, Revision 22, February 2009, U.S. Department of Energy, Carlsbad Field Office, Carlsbad, NM.

DOE/CBFO 2010, *Safety Analysis Report for the RH-TRU 72-B Waste Shipping Package* (current revision), U.S. Department of Energy, Carlsbad Field Office, Carlsbad, NM.

DOE Order 420.1C, *Facility Safety*, Chapter III, "Nuclear Criticality Safety," December 13, 2012, U.S. Department of Energy, Washington, DC.

DOE-STD-3007-2007, *Guidelines for Preparing Criticality Safety Evaluations at Department of Energy Nonreactor Nuclear Facilities*, February 2007, U.S. Department of Energy, Washington, DC.

DOE-STD-3009-2014, *Preparation of Nonreactor Nuclear Facility Documented Safety Analysis*, November 2014, U.S. Department of Energy, Washington, DC.

DOE-STD-5506-2007, *Preparation of Safety Basis Documents for Transuranic (TRU) Waste Facilities*, April 2007, U.S. Department of Energy, Washington, DC.

DOE/WIPP 02-3122. *Transuranic Waste Acceptance Criteria for the Waste Isolation Pilot Plant* (WIPP WAC) (current revision), U.S. Department of Energy, Carlsbad Field Office, Carlsbad, NM.

DOE/WIPP 09-3427, *Waste Data System User's Manual* (current revision), U.S. Department of Energy, Carlsbad Field Office, Carlsbad, NM.

HWFP, *Waste Isolation Pilot Plant Hazardous Waste Facility Permit* NM4890139088-TSDF (current revision), New Mexico Environment Department, Santa Fe, NM.

Public Law 102-579, et seq., 1992, *Waste Isolation Pilot Plant Land Withdrawal Act of 1992*, October 30, 1992 (as amended by Public Law 104-201, September 23, 1996).

WIPP-016, *Nuclear Criticality Safety Evaluation for Contact-handled Transuranic Waste at the Waste Isolation Pilot Plant*, Revision 5, Nuclear Waste Partnership LLC, Carlsbad, NM.

WIPP-020, *Nuclear Criticality Safety Evaluation for Remote-Handled Waste at the Waste Isolation Pilot Plant*, Revision 2, Nuclear Waste Partnership LLC, Carlsbad, NM.

WIPP-021, *Hazards Analysis for the Waste Isolation Pilot Plant Transuranic Waste Handling Safety Basis*. Revision 6, Nuclear Waste Partnership LLC, Carlsbad, NM.

WP 02-AR3001, *Unreviewed Safety Question Determination* (current revision), Management Control Procedure, Nuclear Waste Partnership LLC, Carlsbad, NM.

WP 05-WH1025, *CH Waste Downloading and Emplacement* (current revision), Waste Handling Technical Continuous Use Procedure, Nuclear Waste Partnership LLC, Carlsbad, NM.

WP 05-WH1710, *72-B RH Processing* (current revision), Waste Handling Technical Continuous Use Procedure, Nuclear Waste Partnership LLC, Carlsbad, NM.

WP 09-CN3007, *Engineering and Design Document Preparation and Change Control* (current revision), Management Control Procedure, Nuclear Waste Partnership LLC, Carlsbad, NM.

WP 12-ER3903, *Termination, Reentry, and Recovery* (current revision).

WP 12-ES3918, *Reporting Occurrences in Accordance with DOE Order 232.2* (current revision), Management Control Procedure, Nuclear Waste Partnership LLC, Carlsbad, NM.

WP 12-FP3003, *Combustible Loading Controls for the Waste Handling Building and Underground* (current revision), Management Control Procedure, Nuclear Waste Partnership LLC, Carlsbad, NM.

WP 12-NS.04, *WIPP Nuclear Criticality Safety Program* (current revision), Nuclear Waste Partnership LLC, Carlsbad, NM.

WP 15-PA.01, *Operating Experience and Lessons Learned Program* (current revision), Management Control Procedure, Nuclear Waste Partnership LLC, Carlsbad, NM.

This page intentionally left blank

Table of Contents

7.0 RADIATION PROTECTION 7-1
7.1 Introduction 7-1
7.2 Requirements 7-2
7.3 Radiation Protection Program and Organization 7-2
7.4 ALARA Policy and Program 7-4
7.5 Radiological Protection Training 7-4
7.6 Radiation Exposure Control 7-5
7.6.1 Administrative Limits 7-6
7.6.2 Radiological Practices 7-6
7.6.3 Dosimetry 7-8
7.6.4 Respiratory Protection 7-9
7.7 Radiological Monitoring 7-9
7.8 Radiological Protection Instrumentation 7-10
7.9 Radiological Protection Recordkeeping 7-13
7.10 Occupational Radiation Exposures 7-13
7.11 References 7-14

List of Tables

Table 7.3-1. Program References 7-3
Table 7.5-1. Radiological Worker Entry Training Requirements 7-5

This page intentionally left blank

7.0 RADIATION PROTECTION

7.1 INTRODUCTION

This chapter summarizes the Radiation Protection Program at the Waste Isolation Pilot Plant (WIPP) as it relates to facility safety per the U.S. Department of Energy (DOE) Standard DOE-STD-3009-2014, *Preparation of Nonreactor Nuclear Facility Documented Safety Analysis*. The format of this chapter was left as described in DOE-STD-3009-94, CN3, for Revision 5 of the Documented Safety Analysis (DSA), as allowed by DOE-STD-3009-2014. The Safety Management Program (SMP) Chapters (7.0–18.0) will be reformatted as a consolidated Chapter 7.0 for Revision 6 of the DSA. This chapter summarizes the following:

- The radiological protection organization
- The As Low As Reasonably Achievable (ALARA) Policy and Program
- Radiological protection training
- The radiological exposure controls for Contact-Handled (CH) and Remote-Handled (RH) Transuranic (TRU) Waste Handling and disposal at the WIPP facility
- Radiological monitoring
- Radiological protection instrumentation
- Radiological protection recordkeeping

The key elements (KEs) of the WIPP Radiation Protection Program are as follows:

- **KE 7-1**: Proper placement and operation of Continuous Air Monitors (CAMs)
- **KE 7-2**: Control access and entrance to RH hot cells
- **KE 7**-3: Contamination control to address potential upcasting from the UG.

The key attributes (KAs) of the WIPP Radiation Protection Program described in this chapter are as follows:

- KA 7-1: Administrative Control (AC) levels and dose limits, including processes for planned special exposures, are established that meet the requirements of the *Code of Federal Regulations*, Title 10, Part 835 (10 CFR 835), “Occupational Radiation Protection.”
- KA 7-2: Environmental release of radiological materials is prevented, monitored, and controlled as required by DOE Order 458.1, Change 3, *Radiation Protection of the Public and the Environment*.
- KA 7-3: The ALARA process is used for personnel exposures to ionizing radiation.
- KA 7-4: Potential personnel exposure to ionizing radiation is monitored and measured as required by 10 CFR 835.
- KA 7-5: Training requirements are specified for general employees, radiological workers, Radiological Control Technicians (RCTs), supervisors, and managers involved in operations or maintenance activities where radiological protection is required.

- KA 7-6: Radioactivity is contained at the source wherever practicable using a hierarchy of engineering controls (e.g., CH—confinement and ventilation; RH—confinement, ventilation, remote handling, and shielding), work practices, and hazard controls to limit the need for respiratory protection use. Where respiratory protection is used, *Respiratory Protection* (ANSI Z88.2) and "Respiratory Protection" (29 CFR 1910.134) are applied, including the associated training of personnel.
- KA 7-7: Radiological control records are maintained as necessary to document compliance with 10 CFR 835 and with radiation protection programs required by 10 CFR 835.101, "Radiation Protection Programs."
- KA 7-8: Contamination areas, high contamination areas, and airborne radiation areas are controlled and monitored.

7.2 REQUIREMENTS

The regulations, standards, and DOE Orders required to establish the Radiation Protection Program include the following:

- 10 CFR 835, "Occupational Radiation Protection"
- 29 CFR 1910.134, "Respiratory Protection"
- 40 CFR 61, "National Emission Standards for Hazardous Air Pollutants," Subpart H, "National Emission Standards for Emissions of Radionuclides Other Than Radon from Department of Energy Facilities"
- 40 CFR 191, "Environmental Radiation Protection Standards for Management and Disposal of Spent Nuclear Fuel, High-level and Transuranic Wastes," Subpart A, "Environmental Standards for Management and Storage"
- DOE Order 231.1B, *Environment, Safety and Health Reporting*
- DOE Order 458.1, Change 3, *Radiation Protection of the Public and the Environment*

Guides and standards also used to establish the Radiation Protection Program include the following:

- DOE Guide 441.1-1C, Change 1, *Radiation Protection Programs Guide*
- DOE-STD-1098-2008, Change 1, *Radiological Control*

7.3 RADIATION PROTECTION PROGRAM AND ORGANIZATION

The *Waste Isolation Pilot Plant Radiation Safety Manual* (WP 12-5) describes the Radiation Protection Program at the WIPP facility. This manual describes the organization and functional responsibilities for radiological control, documents the Radiation Protection Program structure, and defines the radiological control management systems necessary to implement the program. The Radiation Protection Program includes specific program documents and procedures developed and maintained to implement aspects of the program identified in WP 12-5 and described in Chapter 12.0. Program documents referenced in this chapter are summarized in Table 7.3-1.

Table 7.3-1. Program References

Document Number	Title
DOE/WIPP 02-3122	*Transuranic Waste Acceptance Criteria for the Waste Isolation Pilot Plant*
DOE/WIPP 95-2054	*Waste Isolation Pilot Plant Radiation Protection Program*
DOE/WIPP 97-2238	*Periodic Confirmatory Measurement Protocol for the Waste Isolation Pilot Plant*
DOE/WIPP 99-2194	*Waste Isolation Pilot Plant Environmental Monitoring Plan*
WP 12-2	*WIPP ALARA Program Manual*
WP 12-3	*Dosimetry Program*
WP 12-5	*Waste Isolation Pilot Plant Radiation Safety Manual*
WP 12-DS3354	*Planned Special Exposures and Emergency Exposures*
WP 12-HP1500	*Radiological Posting and Access Control*
WP 12-HP3200	*Radioactive Material Control*
WP 12-HP3201	*Radioactive Source Accountability and Control*
WP 12-HP3600	*Radiological Work Permits*
WP 12-IH.02	*WIPP Industrial Hygiene Program Manual*
WP 15-RM	*WIPP Records Management Program*
WP 14-TR.01	*WIPP Training Program*
WP 12-HP1100	*Radiological Surveys*
WP 12-DS3310	*Processing Radiation Dose Records and Reporting*
WP 12-DS.06	*WIPP Internal Dosimetry Technical Basis*
WP 12-DS.08	*WIPP External Dosimetry Technical Basis*
WP 12-HP3400	*Contamination Control*
WP 12-HP1316	*Decontamination Facility Operations*

The fundamental principle underlying the Radiological Control Program is derived from “Radiation Protection Guidance to the Federal Agencies for Occupational Exposure” (52 FR 2822), which states:

> *There should not be any occupational exposure of workers to ionizing radiation without the expectation of an overall benefit from the activity causing the exposure.*

WP 12-5 includes the WIPP Radiological Control Policy, which has the following elements:

- Provide safe and healthful working conditions by controlling exposure to ionizing radiation and radiological contamination to a level that is ALARA.
- Install, maintain, and operate WIPP, within the context of ALARA, in accordance with recognized and accepted radiation safety standards, as applicable to WIPP.
- Comply with all applicable environmental and occupational health and safety regulations, including exposure to ionizing radiation.
- Maintain appropriate records of activities that involve exposure to ionizing radiation and radiological contamination.

The Environmental, Safety, and Health organization is responsible for developing and maintaining the WIPP programs for the industrial and radiological safety and health of employees and the general public, as well as establishing the ALARA Committee. Radiological Control and Dosimetry is responsible for: development, maintenance, and oversight of radiation protection and health of employees and the general public; the Radiation Protection Program; the training of radiological workers and RCTs; and implementing the recommendations of the ALARA Committee, chartered in WP 12-2. Operational radiation safety associated with Waste Handling activities at WIPP is the responsibility of Environmental, Safety, and Health and is delegated to Radiological Control and Dosimetry. Details of the organizational structure of the Radiation Protection Program, including qualifications and positions of authority and responsibilities, are described in WP 12-5. The WIPP organizational structure is summarized in Chapter 17.0.

7.4 ALARA POLICY AND PROGRAM

The WIPP ALARA Program is defined in WP 12-2. The ALARA Program interfaces with the overall WIPP Radiation Protection Program described in WP 12-5. The WIPP Radiological Control Policy (Section 7.3) incorporates ALARA. In addition, WP 12-2 incorporates the following from the ALARA philosophy:

- **Management Commitment**: Nuclear Waste Partnership LLC (NWP) management and the DOE Carlsbad Field Office (CBFO) are committed to supporting a comprehensive ALARA Program. To meet this commitment, NWP's policy is to operate the facility in such a manner as to keep radiation exposures consistent with ALARA principles. NWP management supports the activities of the ALARA Committee and its employees who identify ALARA solutions.
- **Program Mission**: The ALARA Program endeavors to reduce exposures to radiation and radioactive materials to a minimum relative to the expenditure of reasonable amounts of resources in the effort. The ALARA Program also promotes minimizing the generation of Radioactive Waste during operations at WIPP.

The WIPP ALARA Program is designed and implemented to minimize radiation exposure to workers, the public, and the environment. "ALARA" does not mean to eliminate all radiation exposure when handling radioactive material, but to lower the risk commensurate with other hazards in the workplace. Measures are taken to maintain radiation exposure ALARA through physical design features (DFs) and ACs. Optimization methods are used to ensure that occupational exposure is maintained ALARA in developing and justifying facility design and physical controls. ACs are only employed as supplemental methods to control radiation exposure. ALARA practices include the use of Radiological Work Permits, radiological postings, use of shielding, and monitoring. The Program requires pre- and post-job reviews of work that exceeds preset trigger levels, as well as reviews of designs, programs, and procedures that involve control activities where there is a potential for radiation exposures. Responsibilities for implementation of the ALARA Program are identified in WP 12-2.

7.5 RADIOLOGICAL PROTECTION TRAINING

WP 12-5 outlines the radiological protection training required for personnel working at or visiting WIPP. Radiation safety training is conducted at the WIPP facility to ensure that each worker understands the following:

- The general and specific radiological aspects of their assignment.
- Their responsibility to their coworkers and the public for safe handling of radioactive materials.

- Their responsibility for minimizing their own radiation exposure.
- The hazards of radiation exposure, and controls to minimize those hazards.

The level of training is commensurate with the requirements of an individual's job. Training includes General Employee Training (GET) and may include Radiological Worker I and II training. RCTs receive initial and continuing training consistent with the guidance provided in *Radiological Control Technician Training* (DOE–HDBK-1122-2009).

GET is required for all the WIPP employees and General Employee Radiological Training, included in GET, is required for entry into the Controlled Area. Visitors who enter Controlled Areas receive a radiological safety orientation that includes basic radiation protection concepts. Radiological Worker I and II training is required for unescorted entry into some areas, as presented in Table 7.5-1. Managers and supervisors receive radiation protection training in addition to GET that is commensurate with their job duties and as specified in WP 12-5. Details of training development, maintenance, and implementation are described in Chapter 12.0.

Table 7.5-1. Radiological Worker Entry Training Requirements

Areas	GET or Visitor Orientation	Radiological Worker I	Radiological Worker II
Allows entry into controlled areas	Yes	Yes	Yes
Allows entry into radioactive material areas or radiological buffer areas	With Radiological Control and Dosimetry Manager approval	Yes	Yes
Allows entry into radiation areas	With Radiological Control and Dosimetry Manager approval	Yes	Yes
Allows entry into high- or very-high-radiation areas	No	No	Yes
Allows entry into contamination areas and high-contamination areas	No	No	Yes
Allows entry into airborne radioactivity areas	No	No	Yes

7.6 RADIATION EXPOSURE CONTROL

This section summarizes the occupational dose limits and AC levels at WIPP, including processes for planned special exposures, and the radiological practices for controlling external occupational exposure to radiation, spread of contamination, and inhalation or ingestion of radioactive materials. Normal operations at the WIPP facility do not involve any expected releases of airborne radioactive materials, although there is minor contamination in some areas due to the February 2014 release event. Filtered vents on the Waste Containers may emit small amounts of radioactivity, which is monitored and controlled through the use of CAMs and routine radiological monitoring. Because Waste Containers are not opened at WIPP and they must meet 10 CFR 835 external contamination limits (which are more conservative than U.S. Department of Transportation (DOT) limits applicable during transit) before shipment, significant contamination on the containers is not expected at WIPP. Although significant external contamination is not expected at WIPP, engineered controls and ACs, such as ALARA practices, use of Radiological Work Permits, and ventilation design are the main methods for controlling contamination. In the unlikely event that contamination of personnel is detected, a decontamination trailer is located in front of the Rad-Con building (952), between the Haul Truck Shelter (Building 253) and Building 455. The trailer is divided into contaminated and clean areas and provided with showers and a

sink and lockers on the clean side to assist with personnel monitoring and decontamination efforts implemented in accordance with *Decontamination Facility Operations* (WP 12-HP1316).

The projected occupational worker dose from normal operations is expected to result primarily from direct radiation from Waste Containers, with minimal, if any, contribution from internal dose (committed effective dose) due to airborne radiological materials. The dose to personnel from Waste Handling varies with the number of shipments and the radiation dose rates of the waste in those shipments.

7.6.1 Administrative Limits

Occupational dose limits from 10 CFR 835, DOE AC levels, and site-specific WIPP AC levels are provided in WP 12-5. The occupational dose limits apply to all general employees. No individual is allowed to exceed the WIPP AC levels without prior written approval from the Radiological Control and Dosimetry Manager and the President and Project Manager.

While the WIPP does not anticipate having planned special exposures ("Planned Special Exposures," 10 CFR 835.204), a procedure (WP 12-DS3354) is in place for that eventuality. In the event of an emergency, emergency exposures are governed by emergency response procedures and WP 12-DS3354.

7.6.2 Radiological Practices

The WIPP Radiation Protection Program described in WP 12-5 establishes radiological practices for exposure controls, including generic precautions for conducting radiological tasks, special personnel protective equipment, engineered controls, the use of Radiological Work Permits, and posting and labeling requirements. Radiological practices at WIPP include continuous Radiological Controls Department surveillance and control of processes that have the potential to result in a radiological exposure and preplanning work so that the radiological hazards are evaluated at the earliest stage in a job. Preplanning work focuses on controlling contamination at the source, eliminating airborne radioactivity to maintain personnel exposure below limits, and performing work in a fashion that ensures ALARA exposures. The objective of the combination of radiological practices is to ensure that the anticipated occupational dose to general employees does not exceed the dose limits of the WIPP Radiation Protection Program (described in WP 12-5) and that the ALARA process is applied to reduce personnel exposure to ionizing radiation.

Engineered DFs at the WIPP include permanent and nonpermanent shielding. Detailed descriptions of shielding are provided in Chapter 2.0. These DFs are summarized below:

- **Permanent Shielding for CH Waste Handling**: Although CH Waste Handling activities will not normally require the use of shielding; there is a Shielded Storage Area in the southeast corner of the CH Bay of the Waste Handling Building (WHB). This area is used for segregating Waste Containers that may have discrepant documentation or may exceed expected radiation or surface contamination levels.
- **Permanent Shielding for RH Waste Handling**: Shielding materials at WIPP include concrete/rebar, lead, steel, or salt. RH Waste is handled in the shielded Hot Cell Complex in the WHB before transport to the Underground (UG). The viewing windows in the walls of the Upper Hot Cell include leaded glass and oil. Openings such as doors, hatches, windows, ventilation ducting, and piping are designed to prevent radiation streaming. Penetrations through primary shielding are typically placed so that they do not provide a direct line through the shield wall to the radiation source. Designs include offset piping connections, stepped doors or hatches, shadow shields, and labyrinths.

Large-diameter penetrations include additional concrete or steel around the penetration and shield collars or leaded grout around pipes and penetrations. Following emplacement of the Waste Canister in the UG salt, a shield plug inserted into the Waste borehole provides shielding and reduces radiation levels in occupied areas of the panel to maintain radiation exposures ALARA while additional Waste Handling operations are conducted.

- **Nonpermanent Shielding for RH Waste Handling**: While beyond the scope of information requested in DOE-STD-3009-2014, nonpermanent shielding for RH Waste Handling is identified because the components are unique to the WIPP disposal process and are considered a passive DF for radiological protection. Nonpermanent shielding for RH Waste Handling includes the Facility Cask, Light Weight Facility Cask (LWFC), shielded insert, alignment fixture assembly, and RH Waste Facility Canister. These components provide shielding once the RH Waste Package leaves the Hot Cell Complex until emplacement in the UG borehole.

Administrative radiological control practices used at WIPP are identified in WP 12-5 and include the following:

- **Access Control**: Access to radiological areas of the facility is controlled in accordance with 10 CFR 835. Only personnel who have successfully completed the requirements specified in WP 12-5 are allowed unescorted entry to the radiological areas of the site. Personnel performing work in a radiological area are required to sign in on a Radiological Work Permit. Access into the Hot Cell Complex is prohibited when RH Waste Containers are outside a shielded shipping container. Access to areas adjacent to the Hot Cell Complex is restricted through key control by facility management as determined by routine surveys and shielding verification surveys.
- **Personnel Access Control Points**: Personnel leaving contamination, high contamination, and airborne radioactivity areas are required to perform a personnel survey before exiting.
- **Radiological Work Permit**: The Radiological Work Permit is a control mechanism used to establish controls for intended work activities. It is generated, approved, and implemented as described in WP 12-HP3600. The Radiological Work Permit specifies the controls necessary for general entry; entry into radiation, high-radiation, and very-high-radiation areas; entry into contamination areas, high-contamination areas, and airborne radioactivity areas; entry into areas of unknown radiological conditions; handling and disposal of TRU and TRU-Mixed Waste; handling of materials with removable contamination that exceeds values of 10 CFR 835, Appendix D, “Surface Contamination Values”; and activities prescribed by a qualified RCT/radiological control superintendent. The Radiological Work Permit may require additional dosimetry and monitoring devices, protective clothing, and respiratory protection equipment based on radiation level, a combination of surface contamination and radiation level, the presence of airborne radioactivity, or the potential for occurrence of any of these conditions. When required, these additional control items are prescribed on a Radiological Work Permit that personnel must follow. The Radiological Work Permit is an administrative mechanism used to establish controls for intended work activities.
- **Radiological Monitoring**: Personnel monitoring is performed in accordance with WP 12-3 and WP 12-5 as discussed in Section 7.7.
- **Radiological Posting and Labeling**: Areas in the WIPP facility, including the UG disposal area, are posted and labeled in accordance with 10 CFR 835.603, “Radiological Areas and Radioactive Material Areas” to specify the actual or potential radiological hazard as described in WP 12-5 and WP 12-HP1500. Exposure control is accomplished by identifying areas containing sources of radiation and/or contamination, and controlling personnel access into these areas. Radiological areas are designated and defined as described in 10 CFR 835 and WP 12-5.

- **Radiation and Contamination Surveys**: RCTs perform routine radiation and contamination surveys of the facility and the shipping containers after receipt of the waste shipments, as well as surveys of Waste Containers during their removal from the shipping container and during processing of the Waste Containers as described in WP 12-HP1100 and WP 12-HP3400. Survey areas and frequencies are established in accordance with health physics procedures. Surveys shall be conducted of property and materials that are to be released from radiological controls. These surveys document that items released meet the requirements of DOE Order 458.1, Change 3.
- **Radioactive Material Control**: Radioactive material control includes control of radioactive sources and radioactive material produced through work processes performed onsite. Use of sources onsite is controlled in accordance with WP 12-HP3201, to ensure proper control, leak testing, inventory, transfer, and disposal of sources. Source accountability is maintained at all times to prevent loss/theft and spread of contamination. Any item used in a process that involves known or suspected presence of radioactive contamination or radioactive materials shall be surveyed before release from a radiological area in accordance with WP 12-HP3200. Items that could contain internal or masked (e.g., painted) contamination are evaluated before release. If the survey indicates the presence of radioactive material on the item, the item is decontaminated, disposed of as Radioactive Waste, or returned to its point of origin.
- **Airborne Radioactivity Monitoring Program**: The Airborne Radioactivity Monitoring Program complies with 10 CFR 835.403, “Air Monitoring” and verifies that the surveys described above are detecting contamination-control problem areas and that those problem areas are corrected before loose surface contamination becomes airborne. The equipment used for air sampling and monitoring is described in Section 7.8. The Airborne Radioactivity Monitoring Program is described in WP 12-5.

7.6.3 Dosimetry

WIPP’s DOE Laboratory Accreditation Program (DOELAP)-accredited Dosimetry Program, described in WP 12-3, is implemented to measure and report occupational radiation exposures of individuals at the WIPP site in compliance with 10 CFR 835. The WIPP Internal and External Radiation Dosimetry Programs are required by 10 CFR 835.402, “Individual Monitoring,” either to be operated in accordance with the DOELAP standards or to have performance substantially equivalent to that of accredited programs. DOELAP accreditation requires the preparation and maintenance of approved procedures for the performance of DOELAP-related activities.

WIPP personnel are classified as radiological workers or nonradiological workers. Nonradiological workers are typically not monitored for occupational exposure. Nonradiological workers are workers that are expected to receive less than 100 mrem per year.

The external occupational radiation exposures of concern are of ionizing radiation (X-ray, gamma, beta, and neutron). The External Radiation Dosimetry Program uses thermoluminescent dosimeters (TLDs) to measure occupational radiation exposures of radiological workers. Radiological workers are assigned a TLD and are instructed in its use by dosimetry personnel. The TLDs remain at the site when workers leave for the day. Electronic personnel dosimeters are also issued to personnel when required by the Radiological Work Permit or procedure and are read and recorded upon entry into and exit from the area. TLDs are exchanged as described in WP 12-3.

WIPP waste operations do not involve opening Waste Containers. To verify the absence of airborne radioactivity, workplace monitoring is performed as described in Sections 7.6.2 and 7.7. Confirmatory and compliance based routine bioassay is performed at WIPP as described in WP 12-3. Certain events

resulting in loss of TRU Waste containment at the WIPP can trigger an internal dose assessment to limit further occupational exposures and/or to facilitate any decision for medical treatment. This could be triggered by high airborne radioactivity in work areas and/or unexpected contamination incidents, such as the February 2014 event.

Radiation exposure data for monitored individuals is reported in compliance with 10 CFR 835.801, "Reports to Individuals" and *Environment, Safety and Health Reporting*, DOE Order 231.1B, Change 1. External and internal dose equivalents are combined to determine compliance with the occupational exposure limits in "Occupational Dose Limits for General Employees" (10 CFR 835.202), as described in WP 12-3. Records of the Dosimetry Program are maintained as described in Section 7.9.

7.6.4 Respiratory Protection

Respiratory protection is described in WP 12-5 and WP 12-IH.02. The WIPP Respiratory Protection Program is considered part of the WIPP Integrated Safety Management System (ISMS) that implements the *Integrated Safety Management System Description* (WP 15-GM.03). The *WIPP Industrial Hygiene Program – Respiratory Protection* (WP 12-IH.02-6) describes the Respiratory Protection Program. The program identifies responsibilities; training and qualification for respirator wearers and managers, including emergency and escape respirator use; selection and issuance of respirators; and inspection, cleaning, sanitizing, storage, and repair of respirators. Workers requiring respirators are given a medical evaluation and are fitted for the devices they are required to wear to ensure compatibility with wearing the devices.

The Respiratory Protection Program is based on the requirements in 29 CFR 1910.134 and guidance in ANSI Z88.2. Where respiratory protection is used, ANSI Z88.2 and 29 CFR 1910.134 are applied, including the associated training of personnel. The program is in compliance with Occupational Safety and Health Administration (OSHA) and Mine Safety and Health Administration (MSHA) respiratory protection regulations. Only respiratory protection equipment approved for use by the National Institute of Occupational Safety and Health is used at WIPP.

Respiratory protection is required when specified on the Radiological Work Permit, based on removable contamination and airborne radioactivity levels specified in WP 12-5. Respiratory protection equipment available at the WIPP includes self-contained breathing apparatus, air line supplied-air suits and hoods, and respirators with particulate or gas-filtering cartridges.

7.7 RADIOLOGICAL MONITORING

Radiological monitoring is performed within and external to the WIPP facilities.

- **Monitoring within Facilities**: Radiological workplace monitoring in the WIPP facility is described in WP 12-5. Workplace monitoring provides a basis for posting and labeling, development of Radiological Work Permits and other work authorizations, implementation of ALARA measures, issuance of individual monitoring devices, and verification of the efficacy of design measures and engineering controls. Radiological monitoring of radiation exposure levels, contamination, and airborne radioactivity is conducted to characterize workplace conditions and detect changes in those conditions; verify the effectiveness of physical DFs and engineering and process controls; demonstrate regulatory compliance; detect the gradual buildup of radioactive material in the workplace; identify and control potential sources of personnel exposure; and allow release of materials, items, and waste for unrestricted use to the public and environment. Workplace monitoring includes the following activities:

- Monitoring radiation exposure and dose rate using radiation surveys.
- Conducting contamination surveys using swipes.
- Monitoring for airborne radioactivity using air samplers and CAMs.
- Contamination monitoring of radiological workers using hand held portable instruments, personnel contamination monitors and hand and foot monitors.

Details of these monitoring activities are described in WP 12-5.

Radioactive sources, including plutonium, strontium/yttrium, and cesium, are used to test, calibrate, and check the operation of radiation detection instrumentation. In addition, radioactive materials may be brought onsite for testing, radiography, and soil density operations. The control of radioactive sources and radioactive materials brought onsite is in accordance with WP 12-HP3200 and WP 12-HP3201.

In addition to workplace monitoring, Radiological Effluent Monitoring Systems (REMSs) are installed in the WHB exhaust, in the UG exhaust, and at the surface where UG ventilation exhausts to demonstrate compliance with the requirements in 40 CFR 191, Subpart A, and 40 CFR 61, Subpart H. The systems collect periodic confirmatory radionuclide particulate samples for quantifying total airborne particulate radioactivity discharged.

- **Monitoring External to Facilities**: Radiological and nonradiological environmental monitoring is performed external to the WIPP facilities in accordance with DOE/WIPP 99-2194 to meet the requirements of the *Radiation Protection of the Public and the Environment* (DOE Order 458.1, Change 3). Environmental monitoring of air, groundwater, surface water, soils, sediments, and biota is performed to characterize the environment around the WIPP facility. The purpose of radiological environmental monitoring is to measure the radionuclides in the ambient environment media. This allows a comparison of sample data to results from previous years and to baseline data to determine the impact of the WIPP operations on the surrounding environment. Environmental monitoring results are reported in the Annual Site Environmental Report in compliance with DOE Order 231.1B, Change 3, as described in DOE/WIPP 99-2194.

In addition, Waste Containers received at WIPP are monitored by the generator sites before shipment to meet 10 CFR 835 external contamination limits as specified in DOE/WIPP 02-3122.

- **Meteorological Monitoring**: The Meteorological Monitoring Program at the WIPP facility is performed in accordance with the *WIPP Meteorological Program* (WP 02-EM.01). Meteorological data are monitored and recorded to supplement characterization of the local environment and facilitate the interpretation of data from other environmental monitoring activities at WIPP. Meteorological data are reported in the WIPP Annual Site Environmental Report. Real-time meteorological data are used in consequence assessment after a real or postulated radiological event at WIPP.

Records generated during monitoring activities are managed as described in Section 7.9.

7.8 RADIOLOGICAL PROTECTION INSTRUMENTATION

The use, maintenance, and calibration of radiological protection instrumentation are described in WP 12-5 and implementing procedures. Inspections, calibrations, performance tests, calibration equipment selection, and Quality Assurance (QA) are performed in accordance with the recommendations of *Radiation Protection Instrumentation Test and Calibration, Portable Survey Instruments*

(ANSI N323A-1997). Instruments are periodically calibrated using approved procedures and with standard sources, traceable to the National Institute of Standards and Technology. Instruments are repaired and calibrated onsite or at offsite calibration facilities. In some cases, specialized instruments may be returned to the manufacturers for repair and calibration. The calibration frequency for each device is based on the type of equipment, manufacturer's recommendations or specifications, inherent stability, required accuracy, intended use (including environmental conditions), assigned tolerances, calibration history, or other factors as appropriate.

REMSs used to collect periodic confirmatory radionuclide particulate samples from the total volume of ventilation air being discharged are calibrated and maintained as described in DOE-STD-1098-2008, Change 1, and implementing procedures. Additional information concerning calibration, testing, and maintenance of instrumentation is described in Chapter 10.0.

The selection of the types of instruments used for radiation and contamination surveys and area monitoring, including their sensitivity and range, quantity, and placement criteria, is made by qualified personnel to meet the requirements of 10 CFR 835.401, "General Requirements," Subparagraph (b).

The radiological protection instruments used at the WIPP facility include the following:

- **Radiological Counting Instruments**: Radiological counting instruments are located in the counting laboratories and at specific task monitoring stations. These monitoring locations include the TRUPACT Maintenance Facility (TMF), the RH Bay, the Transfer Cell Service Room, the CH Bay, and Room 108. These instruments are used to verify radiological conditions and verify that radiation levels remain within the prescribed limits during job coverage and receipt surveys. The instruments possess the sensitivities required for monitoring airborne contamination. When required, samples are prepared for further analysis at a counting laboratory.
- **Portable Radiological Survey Instruments**: Portable radiological survey instruments are used to perform radiation and contamination surveys in the field. Portable instruments include alpha contamination detectors, beta contamination detectors, beta-gamma radiation survey meters, and neutron radiation survey meters.
- **Personnel Monitoring Instruments and Service**: WIPP has a Personnel Dosimetry Program that conforms to the requirements of 10 CFR 835 as described in Section 7.6.3. In addition, when special operations are conducted, direct frisk surveys of personnel are performed by or under the direction of a qualified RCT. Bioassay programs are conducted as described in the Dosimetry Program (WP 12-3).
- **Airborne Radioactivity Monitoring**: CAMs have the sensitivity required for monitoring airborne contamination. CAMs are used at WIPP for TRU Waste as follows:
  - For CH Waste Handling operations in the WHB, two CAMs (i.e., alpha CAMs) are installed at the waste dock. The CAMs are required to be operational when CH Waste Handling activities are being conducted and are set to alarm at 8 derived air concentration (DAC)-hr.
  - For RH Waste Handling operations in the WHB, CAMs are located in the RH Bay at the Cask Preparation Station and in the Cask Unloading Room (CUR), in the Service Room, and in the Facility Cask Loading Room (FCLR). CAMs are required to be in operation when RH Waste Handling activities are being conducted and are set to alarm at 8 DAC-hr.

- Two redundant alpha-beta CAMs are installed in the exhaust drift of the active Waste Disposal Panel. At least one CAM set to alarm at 8 DAC-hr is required to be in operation in the exhaust drift of the active waste disposal before entering the Waste Handling Mode.
- Station "B" CAM is the effluent monitoring location for the UG and reads out and alarms in the CMR.
- During SVS operation, a CAM will be operational at the bottom of the salt hoist.
- The CAMs continually collect and measure airborne particulates by pulling air through a filter in proximity to an integral beta-gamma detector and/or alpha spectrometer. The TRUPACT-II Unloading Dock (TRUDOCK), RH Bay, and UG active panel exit CAMs provide a local and remote readout and alarm in the Central Monitoring Room (CMR). Each surface CAM is set to alarm within the limits in 10 CFR 835. Alpha-beta CAMs are sensitive to an energy range of 1 to 10 mega-electron volts (MeV) for alpha and 80 kilo-electron volts (KeV) to 2.5 MeV for beta.

Fixed Air Samplers (FASs) are located in the WHB, the Support Building, and the UG. The FASs provide an indication of activities that could be causing releases of airborne radioactivity.

In addition to the permanently installed equipment, portable CAMs and portable air samplers are provided. The portable air samplers and portable CAMs are similar to those installed in the Waste Handling areas. Portable samplers are used for sampling routine and non-routine operations, for emergency air sampling, or to replace inoperable equipment temporarily.

The utilization of installed and portable CAMs and air samplers is managed in accordance with the Radiation Protection Program as documented in WP 12-5 and its implementing procedures, including the routine change out of filter media. Technical evaluations are conducted to place retrospective sampling and real-time air monitoring equipment in locations appropriate to the protection of the workers, the public, and the environment.

- **Airborne Effluent Monitoring**: A REMS is installed on the WHB ventilation exhaust to collect periodic confirmatory radionuclide particulate samples from the total volume of air being discharged. This system consists of sampling equipment including a pump, flow controller, sample holder, and delivery piping. The REMS collects samples from four locations: the ventilation exhaust downstream of the high-efficiency particulate air (HEPA) filters associated with both the RH and CH portions of the WHB (Station C), on the Underground Ventilation System (UVS) exhaust both upstream (Station A) and downstream (Station B) of the HEPA filters, and in the UG in E-300 before the disposal exhaust joins the exhaust from other areas of the UG (Station D). Given the current configuration of the UG exhaust system, Station B is the primary effluent monitor of air from the UG facility. Figure 2.4-13 shows the location of both Station A and Station B. Station C is located on the second floor of the WHB. The REMS instrumentation selection, placement, and quality control measures are described in the *Quality Assurance Program Plan for Sampling Emissions of Radionuclides to the Ambient Air at the Waste Isolation Pilot Plant* (WP 12-RC.01). The analysis data from effluent samplers is used for quantifying total airborne particulate radioactivity discharged to demonstrate compliance with the requirements in 40 CFR 191, Subpart A, and 40 CFR 61, Subpart H.
- **Area Radiation Monitoring Instruments**: Area Radiation Monitors are used to provide indication of RH Waste gamma radiation levels and to verify shielding is operating as expected. An Area Radiation Monitor is located in the RH Bay at the Cask Preparation Station. The Area Radiation Monitor provides a remote indication of dose rates where workers are unbolting the lid in addition to the local dose rate surveys conducted by RCTs before starting the work. An Area

Radiation Monitor is also located in the CUR to provide indication of the radiation levels of the waste being moved to the Upper Hot Cell. An Area Radiation Monitor is located in the FCLR to verify that the telescoping port shield properly engages on the RH Waste Cask prior to pulling up the RH Waste Canister from the Transfer Cell into the RH Waste Cask.

In addition, WIPP laboratories provide an additional array of alpha and beta-gamma analyses to perform confirmation of results or identify specific radionuclides as requested by and in support of the WIPP Radiological Control Program.

7.9 RADIOLOGICAL PROTECTION RECORDKEEPING

WP 12-5 specifies radiological control recordkeeping requirements to document compliance with 10 CFR 835. Radiological records are maintained in accordance with WP 15-RM. Dosimetry records are maintained in accordance with WP 12-3. ALARA records are maintained in accordance with WP 12-2. In summary, the radiological records include the following:

- Radiological policy statements
- Radiological control procedures
- Individual radiological doses
- Internal and external dosimetry policies and procedures
- Personnel training
- ALARA records
- Radiological instrumentation test, repair, and calibration records
- Radiological surveys
- Area monitoring dosimetry results
- Radiological Work Permits
- Radiological performance indicators and assessments

Records are specified, prepared, reviewed, approved, controlled, and maintained to accurately reflect completed work and facility conditions and to comply with requirements. Details of the NWP Records Management Program are described in Chapter 14.0.

7.10 OCCUPATIONAL RADIATION EXPOSURES

Occupational radiation doses at the WIPP are expected to be very low, and are frequently below the lower limit of detectability of the dosimetry system. A small number of personnel working aboveground during the February 2014 radiological release event received exposures from detectable intakes of radioactive material, but the exposures were well within regulatory guidelines. Predictions are made at the beginning of each year of the collective personnel doses expected, based on previous years' doses relative to the waste shipment dose rates and shipping rates and on the expected shipping rates for the year. WIPP currently uses an administrative dose limit of 150 mrem, which is significantly below the 10 CFR 835 occupational radiation limit of 5,000 mrem.

7.11 REFERENCES

10 CFR 835, "Occupational Radiation Protection," *Code of Federal Regulations*. U.S. Government Printing Office, Washington, DC.

10 CFR 835, "Occupational Radiation Protection," Section 101, "Radiation Protection Programs," *Code of Federal Regulations*. U.S. Government Printing Office, Washington, DC.

10 CFR 835, "Occupational Radiation Protection," Section 202, "Occupational Dose Limits for General Employees," *Code of Federal Regulations*. U.S. Government Printing Office, Washington, DC.

10 CFR 835, "Occupational Radiation Protection," Section 204, "Planned Special Exposures," *Code of Federal Regulations*. U.S. Government Printing Office, Washington, DC.

10 CFR 835, "Occupational Radiation Protection," Section 401, "General Requirements," *Code of Federal Regulations*. U.S. Government Printing Office, Washington, DC.

10 CFR 835, "Occupational Radiation Protection," Section 402, "Individual Monitoring," *Code of Federal Regulations*. U.S. Government Printing Office, Washington, DC.

10 CFR 835, "Occupational Radiation Protection," Section 403, "Air Monitoring," *Code of Federal Regulations*. U.S. Government Printing Office, Washington, DC.

10 CFR 835, "Occupational Radiation Protection," Section 603, "Radiological Areas and Radioactive Material Areas," *Code of Federal Regulations*. U.S. Government Printing Office, Washington, DC.

10 CFR 835, "Occupational Radiation Protection," Section 801, "Reports to Individuals" *Code of Federal Regulations*. U.S. Government Printing Office, Washington, DC.

10 CFR 835, "Occupational Radiation Protection," Appendix D, "Surface Contamination Values," *Code of Federal Regulations*. U.S. Government Printing Office, Washington, DC.

29 CFR 1910, "Occupational Safety and Health Standards," Section 1910.34, "Respiratory Protection," *Code of Federal Regulations*. U.S. Government Printing Office, Washington, DC.

40 CFR 61, "National Emission Standards for Hazardous Air Pollutants," Subpart H, "National Emission Standards for Emissions of Radionuclides Other Than Radon from Department of Energy Facilities," *Code of Federal Regulations*. U.S. Government Printing Office, Washington, DC.

40 CFR 191, "Environmental Radiation Protection Standards for Management and Disposal of Spent Nuclear Fuel, High-level and Transuranic Wastes," Subpart A, "Environmental Standards for Management and Storage," *Code of Federal Regulations*. U.S. Government Printing Office, Washington, DC.

52 FR 2822, 1987, "Radiation Protection Guidance to the Federal Agencies for Occupational Exposure," *Federal Register*, Vol. 52, p. 2822 (January 27, 1987).

ANSI N323A-1997, *Radiation Protection Instrumentation Test and Calibration, Portable Survey Instruments*, American National Standards Institute, Inc., New York, NY.

ANSI Z88.2, 1992, *Respiratory Protection*, American National Standards Institute, Inc., New York, NY.

DOE Guide 441.1-1C, Change 1, 2008, *Radiation Protection Programs Guide* for use with Title 10, Code of Federal Regulations, Part 835, May 19, 2008, U.S. Department of Energy, Washington, DC.

DOE–HDBK-1122-2009, Change 2, 2011, *Radiological Control Technician Training*, 2011, U.S. Department of Energy, Washington, DC.

DOE Order 231.1B, 2011, *Environment, Safety and Health Reporting*, June 27, 2011, U.S. Department of Energy, Washington, DC.

DOE Order 458.1, Change 3, 2013, *Radiation Protection of the Public and the Environment*, January 15, 2013, U.S. Department of Energy, Washington, DC.

DOE-STD-1098-2008, Change 1, 2009, *Radiological Control*, May 2009, U.S. Department of Energy, Washington, DC.

DOE-STD-3009-94, CN3. *Preparation Guide for U.S. Department of Energy Nonreactor Nuclear Facility Documented Safety Analyses*, March 2006, U.S. Department of Energy, Washington, DC.

DOE-STD-3009-2014, *Preparation of Nonreactor Nuclear Facility Documented Safety Analysis*, November 2014, U.S. Department of Energy, Washington, DC.

DOE/WIPP 02-3122, *Transuranic Waste Acceptance Criteria for the Waste Isolation Pilot Plant* (current revision), U.S. Department of Energy, Carlsbad Field Office, Carlsbad, NM.

DOE/WIPP 95-2054, *Waste Isolation Pilot Plant Radiation Protection Program* (current revision), U.S. Department of Energy, Carlsbad Field Office, Carlsbad, NM.

DOE/WIPP 97-2238, *Periodic Confirmatory Measurement Protocol for the Waste Isolation Pilot Plant* (current revision), U.S. Department of Energy, Carlsbad Field Office, Carlsbad, NM.

DOE/WIPP 99-2194, *Waste Isolation Pilot Plant Environmental Monitoring Plan* (current revision), U.S. Department of Energy, Carlsbad Field Office, Carlsbad, NM.

WP 02-EM.01, *WIPP Meteorological Program* (current revision), Nuclear Waste Partnership LLC, Carlsbad, NM.

WP 12-2, *WIPP ALARA Program Manual* (current revision), Nuclear Waste Partnership LLC, Carlsbad, NM.

WP 12-3, *Dosimetry Program* (current revision), Nuclear Waste Partnership LLC, Carlsbad, NM.

WP 12-5, *Waste Isolation Pilot Plant Radiation Safety Manual* (current revision), Nuclear Waste Partnership LLC, Carlsbad, NM.

WP 12-DS.06, *WIPP Internal Dosimetry Technical Basis*, (current revision), Nuclear Waste Partnership LLC, Carlsbad, NM.

WP 12-DS.08, *WIPP External Dosimetry Technical Basis*, (current revision), Nuclear Waste Partnership LLC, Carlsbad, NM.

WP 12-DS3310, *Processing Radiation Dose Records and Reporting* (current revision), Nuclear Waste Partnership LLC, Carlsbad, NM.

WP 12-DS3354, *Planned Special Exposures and Emergency Exposures*, Management Control Procedure (current revision). Nuclear Waste Partnership LLC, Carlsbad, NM.

WP 12-HP1100, *Radiological Surveys* (current revision), Nuclear Waste Partnership LLC, Carlsbad, NM.

WP 12-HP1316, *Decontamination Facility Operations* (current revision), Nuclear Waste Partnership LLC, Carlsbad, NM.

WP 12-HP1500, *Radiological Posting and Access Control*, Health Physics Technical Procedure (current revision), Nuclear Waste Partnership LLC, Carlsbad, NM.

WP 12-HP3200, *Radioactive Material Control*, Health Physics Technical Procedure (current revision), Nuclear Waste Partnership LLC, Carlsbad, NM.

WP 12-HP3201, *Radioactive Source Accountability and Control*, Health Physics Technical Procedure (current revision), Nuclear Waste Partnership LLC, Carlsbad, NM.

WP 12-HP3400, *Contamination Control*, Health Physics Technical Procedure (current revision), Nuclear Waste Partnership LLC, Carlsbad, NM.

WP 12-HP3600, *Radiological Work Permits*, Management Control Procedure (current revision), Nuclear Waste Partnership LLC, Carlsbad, NM.

WP 12-IH.02, *WIPP Industrial Hygiene Program Manual* (current revision), Nuclear Waste Partnership LLC, Carlsbad, NM.

WP 12-IH.02-6, *WIPP Industrial Hygiene Program – Respiratory Protection* (current revision), Nuclear Waste Partnership LLC, Carlsbad, NM.

WP 12-RC.01, *Quality Assurance Program Plan for Sampling Emissions of Radionuclides to the Ambient Air at the Waste Isolation Pilot Plant* (current revision), Nuclear Waste Partnership LLC, Carlsbad, NM.

WP 14-TR.01, *WIPP Training Program* (current revision), Nuclear Waste Partnership LLC, Carlsbad, NM.

WP 15-GM.03, *Integrated Safety Management System Description*, Management Policy (current revision), Nuclear Waste Partnership LLC, Carlsbad, NM

WP 15-RM, *WIPP Records Management Program* (current revision), Nuclear Waste Partnership LLC, Carlsbad, NM.

Table of Contents

8.0 HAZARDOUS MATERIAL PROTECTION 8-1
8.1 Introduction 8-1
8.2 Requirements 8-2
8.3 Hazardous Material Protection and Organization 8-2
8.4 Hazardous Materials Exposure Control Program 8-4
8.5 Hazardous Material Training 8-4
8.6 Hazardous Material Exposure Control 8-5
8.6.1 Hazardous Material Identification Program 8-5
8.6.2 Administrative Limits 8-6
8.6.3 Occupational Medical Programs 8-6
8.6.4 Respiratory Protection 8-7
8.7 Hazardous Material Monitoring 8-7
8.8 Hazardous Material Protection Instrumentation 8-8
8.9 Hazardous Material Protection Recordkeeping 8-9
8.10 Hazard Communication Program 8-9
8.11 Occupational Chemical Exposures 8-9
8.12 References 8-10

List of Tables

Table 8.3-1. Program References 8-3

This page intentionally left blank

8.0 HAZARDOUS MATERIAL PROTECTION

8.1 INTRODUCTION

This chapter summarizes the Hazardous Material Protection Program at the Waste Isolation Pilot Plant (WIPP) as it relates to facility safety per the U.S. Department of Energy (DOE) Standard DOE-STD-3009-2014, *Preparation of Nonreactor Nuclear Facility Documented Safety Analysis*. The format of this chapter was left as described in DOE-STD-3009-94, CN3, for Revision 5 of the Documented Safety Analysis (DSA), as allowed by DOE-STD-3009-2014. The Safety Management Program (SMP) Chapters (7.0–18.0) will be reformatted as a consolidated Chapter 7.0 for Revision 6 of the DSA. The purpose of this chapter is to describe the key elements (KEs) of the Hazardous Material Protection Program important to the safety basis at WIPP. It summarizes provisions for hazardous material (HAZMAT) protection (other than radiological hazards) and HAZMAT concerns. The elements of this chapter include:

- An overall description of the Hazardous Material Protection Policy and Program.
- A summary of the Hazardous Material Exposure Control Program.
- Information on the Hazardous Material Communication Program.

Although the focus of this chapter is primarily on occupational HAZMAT protection, DOE-STD-3009-2014 requests information concerning HAZMAT monitoring to protect the public and the environment, as well as the worker. Section 8.7 summarizes the monitoring programs to detect the release of HAZMAT as well as occupational monitoring.

The KE of the WIPP Hazardous Material Program is:

- KE 8-1: Establish provisions to monitor and control air quality to ensure underground workers are protected from volatile organic compounds (VOCs); protective measures include posting hazardous areas, establishing monitoring requirements, ensuring local ventilation, and requiring personnel protective equipment such as respiratory protection as needed.

For safety analysis purposes, the key attributes (KAs) of the WIPP Hazardous Material Protection Program described in this chapter are as follows:

- KA 8-1: A Hazard Communication Program is implemented that is consistent with the requirements of the *Code of Federal Regulations* Title 29, Part 1910.1200 (29 CFR 1910.1200), “Hazard Communication,” and 10 CFR 851.22 “Hazard Prevention and Abatement.”
- KA 8-2: Administrative Controls (ACs) and engineering controls are implemented to reduce planned exposures to HAZMAT below the exposure levels required by the Occupational Safety and Health Administration (OSHA) 29 CFR 1910 “Occupational Safety and Health Standards,” Mine Safety and Health Administration (MSHA) 30 CFR 47/48, 49, 57, and 62 “Federal Metal and Nonmetallic Mine Training, Safety, and Health Standards,” and 10 CFR 851.23, “Safety and Health Standards.”
- KA 8-3: Hazard controls to limit exposure are applied with the following hierarchy: (1) hazard elimination or substitution, where feasible and appropriate; (2) engineered controls, where feasible and appropriate; (3) work practices and ACs that limit worker exposures; and (4) personal protective equipment (PPE).

- KA 8-4: Chemicals are controlled from the time of acquisition, through storage and use, to their final disposition, and appropriate chemical hazard analyses are performed.
- KA 8-5: Workplace hazards and job hazards are evaluated.
- KA 8-6: Employees receive introductory training with respect to HAZMAT in the General Employee Training (GET). Specific training is provided as required to meet the requirements of 29 CFR 1910.1200.
- KA 8-7: Employees and subcontractors working onsite who potentially are exposed to hazardous substances during hazardous waste operations receive initial and refresher training consistent with the requirements of 29 CFR 1910.120, "Hazardous Materials Operations and Emergency Response."
- KA 8-8: A Respiratory Protection Program is implemented based on the requirements of "Respiratory Protection" (29 CFR 1910.134).
- KA 8-9: Medical evaluations and physicals, monitoring of worker exposures, and health services are provided through an occupational medical program consistent with 10 CFR 851, Appendix A, "Worker Safety and Health Functional Areas."

8.2 REQUIREMENTS

The regulations, standards, and DOE Orders that are required to establish the WIPP Hazardous Material Protection Program include the following:

- 10 CFR 850, "Chronic Beryllium Disease Prevention Program."
- 10 CFR 851, "Worker Safety and Health Program."
- 29 CFR 1910.1200, "Hazard Communication."
- 29 CFR 1926.59, "Hazard Communication."
- 30 CFR 57, Subpart D, "Air Quality, Radiation, Physical Agents, and Diesel Particulate Matter."
- 48 CFR 970.5223-1, "Integration of Environment, Safety, and Health into Work Planning and Execution."
- DOE Order 436.1, *Departmental Sustainability*.

8.3 HAZARDOUS MATERIAL PROTECTION AND ORGANIZATION

The Hazardous Material Protection Program is an integral part of the *Industrial Safety Program – Structure and Management* (WP 12-IS.01) and implements the principles of the Nuclear Waste Partnership LLC (NWP) safety management policies for integrated safety management (*Integrated Safety Management System Description* (DOE/CBFO 09-3442 and WP 15-GM.03)), the *Worker Safety and Health Program Description* (WP 15-GM.02) described in Chapter 17.0, and the elements of the DOE Voluntary Protection Program. The WIPP Hazardous Material Protection Program is documented in the *WIPP Industrial Hygiene Program Manual* (WP 12-IH.02). Topic-specific program plans are maintained and implemented to control occupational health hazards originating from chemical, biological, and physical (excluding ionizing radiation) agents. Protection of personnel from radiological material is addressed in the Radiation Protection Program discussed in Chapter 7.0 of this DSA.

Collectively, the WIPP Industrial Safety Program, Industrial Hygiene Program, Occupational Health Program, Radiation Safety Manual, and Fire Protection Program (FPP) constitute the NWP Worker

Protection Program. The fundamental policy that forms the basis for the Worker Protection Program, which includes protection from HAZMAT, is:

> *Safety – the requirements/expectation/demand – to ensure we all go home as healthy as we arrived.*

Key principles of the Worker Protection Program are described in WP 12-IS.01.

The Hazardous Material Protection Program is established to protect human health and the environment by controlling chemical hazards. The program defines the scope of chemicals covered and provides direction and references to analyze the hazards that are inherent in their storage and use. It describes the processes and systems used for work performed by NWP and by subcontractors for their activities to control chemical hazards to protect personnel, the public, and the environment.

The program evaluates potential hazards from VOC emissions from Transuranic (TRU) Wastes disposed at the WIPP facility in accordance with the *Waste Isolation Pilot Plant Hazardous Waste Facility Permit* (HWFP), from beryllium and polychlorinated biphenyls (PCBs) that may be present in the TRU Waste, and from chemicals procured and used at WIPP. Evaluations are conducted in reference to the 10 CFR 851 regulations and standards and assessment methodologies. In addition, groundwater monitoring is conducted in accordance with the HWFP. HAZMAT programs that relate to facility safety are described in this chapter and are summarized in Table 8.3-1.

The WIPP Industrial Safety and Hygiene (IS&H) section is responsible for implementation of the HAZMAT program. WP 12-IH.02 identifies the qualifications and positions of authority and responsibilities of the IS&H organization. IS&H coordination with other safety organizations and facility operations is discussed in WP 12-IH.02. The Regulatory and Environmental Services Environmental Monitoring and Hydrology section is responsible for groundwater and VOC monitoring. The WIPP organizational structure is summarized in Chapter 17.0.

Table 8.3-1. Program References

Document Number	Title
DOE/CBFO 09-3442	*CBFO Integrated Safety Management System Description*
DOE/WIPP 99-2194	*Waste Isolation Pilot Plant Environmental Monitoring Plan*
WP 02-1	*WIPP Groundwater Monitoring Program Plan*
WP 12-IH.02	*WIPP Industrial Hygiene Program Manual – Overview*
WP 12-IH.02-4	*WIPP Industrial Hygiene Program – Hazard Communication and Hazardous Materials Management Plan*
WP 12-IH1006	*Airborne Contaminant Sampling*
WP 12-IH1007	*Personal Sampling Pump Calibration*
WP 12-IS.01	*Industrial Safety Program – Structure and Management*
WP 12-NS.03	*Hazard and Analysis Guidance*
WP 12-VC.02	*Quality Assurance Project Plan for Volatile Organic Compound Monitoring*
WP 13-1	*Nuclear Waste Partnership LLC, Quality Assurance Program Description*
WP 15-GM.02	*Worker Safety and Health Program Description*
WP 15-GM.03	*Integrated Safety Management System Description*

Document Number	Title
WP 15-HS.02	*Occupational Health Program*
WP 15-RM	*WIPP Records Management Program*
WP 15-RM3002	*Records Filing, Inventorying, Scheduling, and Dispositioning*

8.4 HAZARDOUS MATERIALS EXPOSURE CONTROL PROGRAM

The Hazardous Materials Exposure Control Program at WIPP seeks to limit employee exposures to HAZMAT to levels below regulatory toxicological exposure limits identified in Section 8.6. Exposure to HAZMAT is controlled by the following methods:

- Training employees to recognize potential hazards, take safety precautions, understand the consequences of an accident, and know the actions to take in case of an accident.
- Using approved and controlled procedures that provide ACs or engineering controls to control exposure to HAZMAT.
- Monitoring the work environment to obtain personnel and area exposure data.
- Controlling chemical procurement, use, and storage at the WIPP.
- Maintaining material safety data sheets (SDSs).
- Furnishing employees the necessary PPE and training on the proper use of PPE.

Identified hazards are managed through controls using the following hierarchy:

1. Elimination or substitution of the hazards, where feasible and appropriate.
2. Engineering controls, where feasible and appropriate.
3. Work practices and ACs that limit worker exposures.
4. Use of PPE.

Mixed Wastes (i.e., waste with both radioactive and hazardous components) are periodically managed at WIPP. As a result, limiting exposure to radioactive materials as described in Chapter 7.0 can result in the control of exposure to HAZMAT.

Pollution prevention and waste minimization requirements that reduce releases of HAZMAT to the environment are described in Chapter 9.0.

8.5 HAZARDOUS MATERIAL TRAINING

WP 12-IH.02-4 requires hazard communication training to be provided to the WIPP personnel through GET and GET refresher courses. GET covers the topics required by 29 CFR 1910.1200, as well as site-specific policies and procedures and access to online SDS databases. Information about new site hazards and changes in applicable policies or procedures is provided to employees in the annual GET refresher courses. Job-specific hazard communication training for chemical hazards is provided through specific training and qualifications, pre-job briefings, and on-the-job instruction.

WIPP is permitted by the state of New Mexico as a hazardous waste management facility. Personnel within the scope of 29 CFR 1910.120 receive training as hazardous waste workers as described in Chapter 9.0.

Additional information concerning training development, maintenance, and implementation is provided in Chapter 12.0.

8.6 HAZARDOUS MATERIAL EXPOSURE CONTROL

This section summarizes the plans and procedures for controlling occupational exposure and the spread of HAZMAT.

8.6.1 Hazardous Material Identification Program

The WIPP facility implements an Integrated Safety Management System (ISMS) that meets the requirements of 48 CFR 970.5223-1, "Integration of Environment, Safety, and Health into Work Planning and Execution." This system requires that before work is performed, the associated hazards are evaluated and an agreed-upon set of safety and health standards and requirements are established that, when implemented, provide adequate assurance that the employees, the public, and the environment are protected from adverse consequences. ACs and engineering controls are tailored to the work being performed. The WIPP ISMS is documented in the ISMS descriptions in DOE/CBFO 09-3442 and WP 15-GM.03.

WP 12-IH.02, the *WIPP Industrial Hygiene Program Manual*, establishes programs to protect the WIPP workers from exposure to HAZMAT by anticipating, recognizing, evaluating, and controlling chemical hazards in the workplace. Exposure to HAZMAT is controlled through a combination of engineered controls, ACs, and PPE. Programs in the manual consist of the following:

- **Occupational Health Hazard Exposure Assessments**: The Occupational Health Hazard Assessment Program addresses the measures taken to manage, reduce, and eliminate risks to WIPP personnel from chemical and other workplace hazards. Topics that address HAZMAT include diesel emission monitoring, chemical exposure measurement and assessment, standards for exposure monitoring in accordance with WP 15-GM.02, sample collection and evaluation of collected data against applicable exposure limits, and action levels. Hazard assessment air contaminant monitoring is discussed in Section 8.7.
- **Hazard Communication and Hazardous Material Management Plan**: The plan identifies requirements for the proper identification and evaluation of HAZMAT by establishing controls for HAZMAT procurement and management and required training. Chemicals purchased for use are reviewed for their associated hazards prior to purchase approval. Restricted materials (which require written IS&H/Site Environmental Compliance management approval before purchase) are identified. Receipt inspection is conducted, as appropriate, to ensure control of HAZMAT throughout the site. An SDS is maintained for each chemical as described in Section 8.10. Once received, HAZMAT is controlled until it is used or disposed of.
- **Identified Hazardous Materials**: Specific chemical hazards have been identified in TRU Wastes received at the WIPP. These materials include beryllium, PCBs, and VOCs. VOC monitoring is conducted as described in Section 8.7. Although no activities at the WIPP involve opening containers and directly handling the waste as part of normal operations, there are programs to identify the controls necessary for worker protection from beryllium and PCBs in the event that a

Waste Container is breached. In general, the controls that provide radiological protection, described in Chapter 7.0, also provide protection from beryllium, VOCs, and PCBs.

In addition to the Hazardous Material Protection Program, safety and health controls and requirements are integrated into operations and maintenance work through hazard identification performed at the facility and task levels as discussed in Chapter 11.0 and during Emergency Planning Hazard Assessments (EPHAs) as discussed in Chapter 15.0. The WIPP staff also performs hazard identification and analysis when maintaining the safety basis pursuant to the requirements of 10 CFR 830, "Nuclear Safety Management," Subpart B, "Safety Basis Requirements" as described in WP 12-NS.03. These analyses identify chemical and other HAZMAT associated with facility operations. Hazards are identified for maintenance work through the job hazard analysis process described in *Job Hazard Analysis Performance and Development* (WP 12-IS3002).

Containment and control of HAZMAT commingled with TRU Waste received at the WIPP facility are integrated with control of radiological materials using the administrative radiological control practices described in Chapter 7.0. HAZMAT not associated with TRU Waste is controlled using the programs identified in WP 12-IH.02-4.

8.6.2 Administrative Limits

NWP complies with the lower (more protective) permissible exposure limits identified in OSHA 29 CFR 1910 or the current edition of the American Conference of Governmental Industrial Hygienists® *Documentation of the Threshold Limit Values and Biological Exposure Indices* for chemicals consistent with the requirements of 10 CFR 851.23, as described in WP 15-GM.02 and WP 12-IH.02. Additional exposure limits for beryllium are provided in 10 CFR 850, as described in WP 15-GM.02.

8.6.3 Occupational Medical Programs

The WIPP *Occupational Medical Program* is described in WP 15-HS.02. Occupational medical personnel work in cooperation with Health Physics and IS&H professionals to review processes and procedures with an emphasis on physical, biological, and chemical hazards present in the work site in accordance with WP 15-GM.02. Health evaluations are performed as described in WP 15-HS.02, and are summarized as follows:

- **Preplacement Evaluations**: Medical evaluations for specific job task analyses are performed to decide whether the employee can do the job safely and reliably, consistent with the *Americans with Disabilities Act of 1990* (42 USC 12101, et seq.). Preplacement physical examinations may be performed based on the outcome of the evaluation.
- **Medical Surveillance and Health Monitoring**: Special health evaluations and health monitoring are conducted for employees who work in jobs involving specific physical, chemical, radiological, or biological hazards in accordance with WP 15-GM.02 or on a case-by-case basis as directed by the medical staff and/or the Occupational Medical Director. Medical surveillances for radiological hazards are discussed in Chapter 7.0.
- **Qualification Examinations**: Medical qualification examinations are performed for employees with specific job assignments based on regulatory requirements.
- **Fitness for Duty**: Employees are evaluated for the presence of medical and/or psychological conditions or substance abuse that may reasonably impair their safe, reliable, and trustworthy performance of assigned tasks.

- **Return-to-Work**: All employees with occupationally related injuries or illnesses are evaluated before returning to work. Employees with non-occupationally related injuries or illnesses may be evaluated based on the duration of absence or other factors.
- **Termination**: Termination health examinations are made available to all terminating employees.

The WIPP Occupational Medical Program maintains the confidentiality of employee medical records in accordance with privacy rules for medical information disclosure. Employee medical and exposure records are maintained as described in WP 15-HS.02 and WP 12-IH.02. Details of the NWP Records Management Program are described in Chapter 14.0.

8.6.4 Respiratory Protection

In general, the controls that provide radiological protection, described in Chapter 7.0, also provide protection from beryllium, VOCs, and PCBs. Per DOE-STD-3009-94, Section 7.6 is incorporated here by reference.

8.7 HAZARDOUS MATERIAL MONITORING

Occupational HAZMAT monitoring to detect the spread of HAZMAT and to detect any environmental release of HAZMAT is performed at WIPP.

Occupational HAZMAT monitoring is summarized as follows:

- **Hazard Assessment Air Contaminant Monitoring**: WP 12-IH.02 describes the WIPP program for conducting occupational health hazard assessments, which includes monitoring of diesel emissions and chemical hazard assessments.

  Underground (UG) equipment is periodically monitored for diesel emissions to ensure the health and safety of personnel. Incomplete combustion of diesel fuels generates contaminants including carbon monoxide, carbon dioxide, and nitrogen dioxide. Vehicles are checked for carbon monoxide and nitrogen dioxide emissions after preventive maintenance and during scheduled overview inspections.

  IS&H personnel perform airborne contaminant monitoring as necessary to assess chemical hazards posed by HAZMAT used in the workplace. The monitoring of oxygen, carbon monoxide, and lower explosive limit is performed daily in accordance with MSHA regulations (30 CFR 57). Exposure assessments, sample collection, administrative levels, and action limits are described in WP 12-IH.02.

- **Workplace Monitoring**: Surveys and inspections are performed by IS&H in accordance with WP 12-IH.02 to identify any actual or potential hazards or undesirable conditions that could adversely impact facility workers in the workplace. Examples of items surveyed/inspected are drinking water potability, local exhaust ventilation systems, and chemical, physical, and biological hazards.

  Radiological and non-radiological environmental monitoring is performed in accordance with DOE/WIPP 99-2194 to meet the requirements of DOE Order 436.1. Radiological monitoring and programs for continuing collection of relevant meteorological data are described in Chapter 7.0. Non-radiological environmental monitoring includes groundwater monitoring and VOC monitoring.

- **Groundwater Monitoring**: Groundwater is monitored for common groundwater indicator parameters and hazardous constituents listed in the HWFP, as described in the Environmental Monitoring Plan (DOE/WIPP 99-2194). The Groundwater Monitoring Program, including the basic requirements, responsibilities and organization, program description, Quality Assurance (QA), reporting, and records management, is described in WP 02-1. Environmental monitoring results are reported in the WIPP Annual Site Environmental Report in compliance with DOE Order 231.1B, *Environment, Safety, and Health Reporting*, as described in DOE/WIPP 99-2194.
- **Volatile Organic Compound Monitoring**: VOC monitoring is required by the HWFP and will be conducted throughout the disposal phase of operations to measure VOC concentrations in emissions from TRU-Mixed Waste disposed of in the UG. The Sampling and Analysis Program is described in WP 12-VC.02 and includes sampling of the repository and of the active disposal unit. VOC monitoring is also conducted in closed rooms and panels in accordance with the HWFP, which establishes action levels if VOC concentrations exceed levels of concern identified in the HWFP.

  Repository sampling for target VOC compounds takes place at two locations. One sampling is conducted on the upstream sources (i.e., inlet ventilation air to the active TRU Waste Disposal Panel) and the second sampling is conducted on the UG exhaust air, which yields the total of VOCs from upstream sources plus any VOC releases from emplaced TRU Waste. For each quantified target VOC, the concentrations measured at upstream locations are subtracted from the concentrations measured at the exhaust to assess the magnitude of VOC releases, if any, from the emplaced waste. Disposal Room VOC monitoring includes sampling at the inlet and exhaust side of each room until initiation of panel closure. Results of the analyses are reported to the New Mexico Environment Department (NMED) in accordance with reporting requirements of the HWFP and are included in the Annual Site Environmental Report.

Monitoring records are maintained as described in the implementing documents referenced herein and in Section 8.10.

8.8 HAZARDOUS MATERIAL PROTECTION INSTRUMENTATION

HAZMAT protection instrumentation is required for radiological and non-radiological monitoring at the WIPP. Radiological protection monitoring equipment is described in Chapter 7.0, Section 7.8. This section describes the non-radiological HAZMAT protection equipment selection and type and the QA processes.

- **Hazard Assessment Air Contaminant Monitoring**: WP 12-IH1006 describes the process and requirements used by IS&H for selection of sampling methods and methods used for collection of airborne contaminant samples to determine employee exposure. Sampling equipment is specified by method and typically includes oxygen, carbon monoxide, lower explosive limit monitors, Draeger-Tubes®, and pumps or other portable direct reading instruments. Sample pumps, if used, are calibrated per WP 12-IH1007. QA for sampling pump calibration is described in WP 12-IH1007.
- **Volatile Organic Compound Monitoring**: VOC air samples are collected in the repository and in the active Disposal Room as described in Section 8.7. Monitoring is performed using the concept of pressurized sample collection in stainless steel canisters, as described in the HWFP. Samples are delivered to an offsite laboratory for analysis. The VOC monitoring instrumentation, selection and placement, sampling, and QA requirements are described in the HWFP. The NWP QA project plan for VOC sampling and analysis is described in WP 12-VC.02. The *Quality*

Assurance Project Plan describes implementation of the monitoring plan, including instrumentation, methods, QA objectives, and QA calibration and maintenance.

Air monitoring equipment for HAZMAT is calibrated and maintained in accordance with established processes as described above and in Chapter 10.0. Chapter 14.0 describes the NWP QA Program, including monitoring, measuring, testing, and data collection equipment calibration; control of out-of-calibration equipment; and documentation of monitoring equipment calibration.

8.9 HAZARDOUS MATERIAL PROTECTION RECORDKEEPING

The WP 13-1 defines recordkeeping requirements at the WIPP facility. Records are specified, prepared, reviewed, approved, controlled, and maintained to accurately reflect completed work and facility conditions and to comply with statutory or contractual requirements. WP 15-RM3002 and associated procedures ensure that records are reviewed for adequacy, approved for release by authorized personnel, and distributed to and used at the required locations. Records are maintained in accordance with WP 15-RM. Details of the NWP Records Management Program are described in Chapter 14.0.

8.10 HAZARD COMMUNICATION PROGRAM

WIPP implements a Hazard Communication Program consistent with the requirements of 29 CFR 1910.1200, as described in WP 12-IH.02-4. The program applies to NWP employees and subcontractors and includes controls for HAZMAT used at the WIPP. The OSHA Hazard Communication Standard applies to hazardous chemicals procured for or generated in the workplace and/or laboratories, products used in janitorial activities, and materials associated with the treatment, storage, and disposal of waste at *Resource Conservation and Recovery Act of 1976* (RCRA) (42 USC 6901, et seq.) facilities.

SDSs are required to be submitted and maintained for each chemical used at the site. The WIPP SDS Program is designed to provide ready access of SDSs to all personnel and appropriate training in their interpretation. The SDS provides chemical-specific information including chemical name, manufacturer, physical properties, chemical properties, reactivity, and fire suppression information. HAZMAT area representatives develop inventory lists and verify that SDSs are available for the HAZMAT used in their areas of responsibility. Workers are trained annually through GET refresher courses, as discussed in Section 8.5, in how to obtain SDS information, including paper or electronic copies, and how to interpret them. Subcontractors must obtain approval before bringing chemicals to the WIPP site and must maintain SDSs for the chemicals in their inventory.

WP 12-IH.02-4 specifies responsibilities and requirements for the proper labeling of HAZMAT. These responsibilities include receipt inspection, labeling of transferred HAZMAT, and labeling of cabinets designed for and dedicated to the storage of HAZMAT. Personnel receive training on the proper labeling of HAZMAT during GET.

8.11 OCCUPATIONAL CHEMICAL EXPOSURES

WIPP is not a chemical process facility. Exposure to HAZMAT is limited to vehicle exhaust and the paints, lubricants, and cleaning materials common to any commercial or institutional operation, as well as VOC emission from emplaced waste. WP 12-IH.02 implements an occupational exposure assessment strategy to ensure that the chemical exposure aspects of WIPP operations are identified and evaluated to ensure that occupational chemical exposures meet the standards in 10 CFR 851. Sampling and/or monitoring is conducted as necessary to confirm the adequacy of these evaluations. Additional evaluation,

including sampling/monitoring as necessary, is conducted as conditions change. Data collected to date indicate employee exposures below applicable limits.

8.12 REFERENCES

10 CFR 830, "Nuclear Safety Management," Subpart B, "Safety Basis Requirements," *Code of Federal Regulations*. U.S. Government Printing Office, Washington, DC.

10 CFR 850, "Chronic Beryllium Disease Prevention Program," *Code of Federal Regulations*. U.S. Government Printing Office, Washington, DC.

10 CFR 851, "Worker Safety and Health Program," *Code of Federal Regulations*. U.S. Government Printing Office, Washington, DC.

10 CFR 851, "Worker Safety and Health Program," Appendix A, "Worker Safety and Health Functional Areas," *Code of Federal Regulations*. U.S. Government Printing Office, Washington, DC.

10 CFR 851, "Worker Safety and Health Program," Section 851.22, "Hazard Prevention and Abatement," *Code of Federal Regulations*. U.S. Government Printing Office, Washington, DC.

10 CFR 851, "Worker Safety and Health Program," Section 851.23, "Safety and Health Standards," *Code of Federal Regulations*. U.S. Government Printing Office, Washington, DC.

29 CFR 1910, "Occupational Safety and Health Standards," *Code of Federal Regulations*. U.S. Government Printing Office, Washington, DC.

29 CFR 1910, "Occupational Safety and Health Standards," Section 1910.120, "Hazardous Materials Operations and Emergency Response," Subpart H, "Hazardous Materials," *Code of Federal Regulations*. U.S. Government Printing Office, Washington, DC.

29 CFR 1910, "Occupational Safety and Health Standards," Section 1910.1200, "Hazard Communication," *Code of Federal Regulations*. U.S. Government Printing Office, Washington, DC.

29 CFR 1910, "Occupational Safety and Health Standards," Section 1910.134, "Respiratory Protection," *Code of Federal Regulations*. U.S. Government Printing Office, Washington, DC.

29 CFR 1926, "Safety and Health Regulations for Construction," Section 1926.59, "Hazard Communication," *Code of Federal Regulations*. U.S. Government Printing Office, Washington, DC.

30 CFR 47, "Hazard Communication," *Code of Federal Regulations*. U.S. Government Printing Office, Washington, DC.

30 CFR 48, "Training and Retraining of Miners," *Code of Federal Regulations*. U.S. Government Printing Office, Washington, DC.

30 CFR 49, "Mine Rescue Teams," *Code of Federal Regulations*. U.S. Government Printing Office, Washington, DC.

30 CFR 57, "Safety and Health Standards – Underground Metal and Nonmetal Mines," Subpart D, "Air Quality, Radiation, Physical Agents, and Diesel Particulate Matter," *Code of Federal Regulations*. U.S. Government Printing Office, Washington, DC.

30 CFR 62, "Occupational Noise Exposure," *Code of Federal Regulations*. U.S. Government Printing Office, Washington, DC.

48 CFR 970, "DOE Management and Operating Contracts," Section 5223-1, "Integration of Environment, Safety, and Health into Work Planning and Execution," *Code of Federal Regulations*. U.S. Government Printing Office, Washington, DC.

42 USC 6901, et seq., *Resource Conservation and Recovery Act of 1976*.

42 USC 12101, et seq., *Americans with Disabilities Act of 1990*.

ACGIH®, 2001, *Documentation of the Threshold Limit Values and Biological Exposure Indices*, 7th Edition, ISBN: 978-1-882417-43-8, American Conference of Governmental Industrial Hygienists, Cincinnati, OH.

DOE/CBFO 09-3442, *CBFO Integrated Safety Management System Description* (current revision), U.S. Department of Energy, Carlsbad Field Office, Carlsbad, NM.

DOE Order 231.1B, 2011, *Environment, Safety, and Health Reporting*, June 27, 2011, U.S. Department of Energy, Washington, DC.

DOE Order 436.1, 2011, *Departmental Sustainability*, May 2, 2011, U.S. Department of Energy, Washington, DC.

DOE-STD-3009-94, CN3. *Preparation Guide for U.S. Department of Energy Nonreactor Nuclear Facility Documented Safety Analyses*, March 2006, U.S. Department of Energy, Washington, DC.

DOE-STD-3009-2014, *Preparation of Nonreactor Nuclear Facility Documented Safety Analysis*, November 2014, U.S. Department of Energy, Washington, DC.

DOE/WIPP 99-2194, *Waste Isolation Pilot Plant Environmental Monitoring Plan* (current revision), U.S. Department of Energy, Carlsbad Field Office, Carlsbad, NM.

HWFP, *Waste Isolation Pilot Plant Hazardous Waste Facility Permit* NM4890139088-TSDF (current revision), New Mexico Environment Department, Santa Fe, NM.

WIPP-021, *Hazards Analysis for the Waste Isolation Pilot Plant Transuranic Waste Handling Safety Basis*. Revision 6, Nuclear Waste Partnership LLC, Carlsbad, NM.

WP 02-1, *WIPP Groundwater Monitoring Program Plan* (current revision), Nuclear Waste Partnership LLC, Carlsbad, NM.

WP 12-IH.02, *WIPP Industrial Hygiene Program Manual* (current revision), Nuclear Waste Partnership LLC, Carlsbad, NM.

WP 12-IH.02-4, *WIPP Industrial Hygiene Program – Hazard Communication and Hazardous Materials Management Plan* (current revision), Nuclear Waste Partnership LLC, Carlsbad, NM.

WP 12-IH1006, *Airborne Contaminant Sampling*, Industrial Hygiene Technical Procedure (current revision), Nuclear Waste Partnership LLC, Carlsbad, NM.

WP 12-IH1007, *Personal Sampling Pump Calibration*, Industrial Hygiene Technical Procedure (current revision), Nuclear Waste Partnership LLC, Carlsbad, NM.

WP 12-IS.01, *Industrial Safety Program – Structure and Management* (current revision), Nuclear Waste Partnership LLC, Carlsbad, NM.

WP 12-IS3002, *Job Hazard Analysis and Performance and Development* (current revision), Nuclear Waste Partnership LLC, Carlsbad, NM.

WP 12-NS.03, *Hazard Analysis Guidance* (current revision), Nuclear Waste Partnership LLC, Carlsbad, NM.

WP 12-VC.02, *Quality Assurance Project Plan for Volatile Organic Compound Monitoring* (current revision), Nuclear Waste Partnership LLC, Carlsbad, NM.

WP 13-1, *Nuclear Waste Partnership LLC, Quality Assurance Program Description* (current revision), Nuclear Waste Partnership LLC, Carlsbad, NM.

WP 15-GM.02, *Worker Safety and Health Program Description* (current revision), Nuclear Waste Partnership LLC, Carlsbad, NM.

WP 15-GM.03, *Integrated Safety Management System Description* (current revision), Nuclear Waste Partnership LLC, Carlsbad, NM.

WP 15-HS.02, *Occupational Health Program* (current revision), Nuclear Waste Partnership LLC, Carlsbad, NM.

WP 15-RM, *WIPP Records Management Program* (current revision), Washington TRU Solutions, LLC, Carlsbad, NM.

WP 15-RM3002, *Records Filing, Inventorying, Scheduling, and Dispositioning*, Management Control Procedure (current revision), Washington TRU Solutions, LLC, Carlsbad, NM.

Table of Contents

9.0 RADIOACTIVE AND HAZARDOUS WASTE MANAGEMENT 9-1
9.1 Introduction 9-1
9.2 Requirements 9-2
9.3 Radioactive and Hazardous Waste Management Program and Organization 9-3
9.4 Radioactive and Hazardous Waste Streams and Sources 9-5
9.4.1 Waste Management Process 9-5
9.4.2 Waste Sources and Characteristics 9-5
9.4.3 Waste Handling or Treatment Systems 9-7
9.5 References 9-7

List of Tables

Table 9.3-1. Program References 9-4

This page intentionally left blank

9.0 RADIOACTIVE AND HAZARDOUS WASTE MANAGEMENT

9.1 INTRODUCTION

This chapter summarizes the Radioactive and Hazardous Waste Management Program at the Waste Isolation Pilot Plant (WIPP) as it relates to facility safety per the U.S. Department of Energy (DOE) Standard DOE-STD-3009-2014, *Preparation of Nonreactor Nuclear Facility Documented Safety Analysis*. The format of this chapter was left as described in DOE-STD-3009-94, CN3, for Revision 5 of the Documented Safety Analysis (DSA), as allowed by DOE-STD-3009-2014. The Safety Management Program (SMP) Chapters (7.0–18.0) will be reformatted as a consolidated Chapter 7.0 for Revision 6 of the DSA. The WIPP facility was designed and constructed to dispose of Transuranic (TRU) and TRU-Mixed Waste generated by defense-related activities of the United States.

In October 1999, the New Mexico Environment Department (NMED) issued the *Waste Isolation Pilot Plant Hazardous Waste Facility Permit* (HWFP), which authorized the receipt, management, storage, and disposal of Contact-Handled (CH) TRU Waste at WIPP. The HWFP was modified and reissued on November 30, 2010. This renewal is active for 10 years. In November 2006, the NMED issued a permit modification request to WIPP that authorized the receipt, management, storage, and disposal of Remote-Handled (RH) TRU Waste at the WIPP facility.

Waste received for disposal at WIPP must meet the requirements of the *Transuranic Waste Acceptance Criteria for the Waste Isolation Pilot Plant* (WIPP WAC) (DOE/WIPP 02-3122) before shipment. The WIPP WAC identifies the Waste Acceptance Criteria (WAC) for the transportation, receipt, and disposal of CH and RH TRU Waste at the WIPP site. The Waste Handling and disposal facility and waste management process for TRU Wastes shipped to WIPP are described in Chapter 2.0. The hazards identification of the TRU Waste shipped to WIPP are described in Chapter 3.0.

Per DOE-STD-3009-94, this chapter summarizes the programs used to manage radioactive, mixed, and hazardous wastes that are generated as a result of operations pertaining to the mission or from recovery actions; for example, wastes generated during maintenance and operation of the facilities and equipment or from decontamination activities may be characterized in accordance with WP 02-RC3110 and/or WP 12-RE3003. These wastes include radioactive and mixed waste as either the low-level or TRU Waste radiological levels from the TRU Waste Handling and disposal process, as defined in the HWFP, and site-generated hazardous waste. This chapter summarizes the following:

- The waste management programs and organizations.
- The sources of the site waste streams and characteristics.
- The waste management process, including the overall waste management policy/philosophy.
- The design features (DFs) and Administrative Controls (ACs) for the Waste Handling or treatment system for site-derived and site-generated wastes.

No key elements (KEs) associated with the Radioactive and Hazardous Waste Management program resulted from WIPP-021, *Hazards Analysis for the Waste Isolation Pilot Plant Transuranic Waste Handling Safety Basis*.

For safety analysis purposes, the key attributes (KAs) of the WIPP radioactive and hazardous waste management program described in this section are as follow:

- KA 9-1: Site-generated non-radioactive hazardous wastes are managed in accordance with applicable federal and state regulations as described in the *Hazardous and Universal Waste Management Plan* (WP 02-RC.01).
- KA 9-2: Site-derived wastes are managed in accordance with the HWFP and the applicable subparts of the polychlorinated biphenyl (PCB) requirements of the U.S. Environmental Protection Agency (EPA) (40 CFR 761).
- KA 9-3: WIPP facility staff implements a pollution prevention and waste minimization program consistent with the requirements specified in the *Code of Federal Regulations* Title 48, Part 970.5223-1 (48 CFR 970.5223-1), "Integration of Environment, Safety, and Health into Work Planning and Execution" and 48 CFR 970.5204-2, "Laws, Regulations, and DOE Directives."
- KA 9-4: Inventories of site-derived and site-generated wastes are maintained.
- KA 9-5: Configuration, location, and quantities of site-derived and site-generated wastes are controlled.

9.2 REQUIREMENTS

The regulations, standards, and DOE Orders that form the basis for the WIPP waste management programs for site-derived waste and site-generated hazardous waste include the following:

- *Waste Isolation Pilot Plant Hazardous Waste Facility Permit* (HWFP) (current revision), New Mexico Environment Department, Santa Fe, NM.
- 10 CFR 830, "Nuclear Safety Management."
- 10 CFR 835, "Occupational Radiation Protection."
- 10 CFR 851, "Worker Safety and Health Program."
- 29 CFR 1910.120, "Hazardous Materials Operations and Emergency Response," Subpart H, "Hazardous Materials."
- 40 CFR 260–268; 273, "U.S. Environmental Protection Agency (EPA) Regulations Implementing the *Resource Conservation and Recovery Act of 1976.*"
- 40 CFR 273, "Standards for Universal Waste Management."
- 40 CFR 761, "Polychlorinated Biphenyls (PCB) Manufacturing, Processing, Distribution in Commerce, and Use Prohibitions"; Subpart C, "Marking of PCBs and PCB Items"; Subpart D, "Storage and Disposal"; and Subpart G, "PCB Spill Cleanup Policy."
- 49 CFR 172, "Hazardous Materials Table, Special Provisions, Hazardous Materials Communications, Emergency Response Information, and Training Requirements," Subpart H, "Training."
- 48 CFR 970, "DOE Management and Operating Contracts," Section 5204-2, "Laws, Regulations, and DOE Directives."
- 48 CFR 970.5223–1, "Integration of Environment, Safety, and Health into Work Planning and Execution."

- 20.4.1 NMAC, "Hazardous Waste Management."
- DOE Order 435.1, Change 1, *Radioactive Waste Management.*
- DOE Order 436.1, *Departmental Sustainability.*
- DOE Order 458.1, Change 3, *Radiation Protection of the Public and the Environment.*
- DOE Order 460.1C, *Packaging and Transportation Safety.*
- EPA letter reauthorizing WIPP for PCB disposal (EPA 2013).

9.3 RADIOACTIVE AND HAZARDOUS WASTE MANAGEMENT PROGRAM AND ORGANIZATION

The radioactive and hazardous waste programs at the WIPP facility incorporate the Nuclear Waste Partnership LLC (NWP) safety management policies for Integrated Safety Management (*CBFO Integrated Safety Management System Description* (DOE/CBFO 09-3442)) described in Chapter 17.0 and the radiological control policy and As Low As Reasonably Achievable (ALARA) philosophy described in Chapter 7.0. These, together with the *CBFO/NWP Environmental Policy Statement* (DOE/WIPP 04-3310) discussed in Section 9.4, are fundamental to the management of TRU Wastes received at WIPP and the management of site-derived and site-generated waste.

Site-derived waste, as further discussed in Section 9.4.1, is waste generated by contamination from TRU Waste processed to the WIPP emplacement panels and is managed and disposed of at WIPP per *Site-derived Mixed Waste Handling* (WP 05-WH1036), which implements the waste management and disposal requirements of the HWFP and the applicable subparts of the PCB requirements of the EPA (40 CFR 761). WP 05-WH1036 and the referenced procedures include WAC for site-derived waste and processes for waste inspection and containerization, documentation of waste information, solidification of liquids, container identification and records, storage area inspections, and preparation of Waste Containers for disposal in the Underground (UG). Site-derived waste may be stored in the Waste Handling Building (WHB) site-derived waste storage areas: the CH Bay and RH Bay, as permitted in the WHB. The design of the storage areas is described in the HWFP. Site-derived TRU Waste is disposed of in the UG disposal area at WIPP in accordance with *CH Waste Downloading and Emplacement* (WP 05-WH1025) along with TRU Waste shipped to the WIPP. The HWFP does not preclude the management and offsite disposal of derived waste or mixed derived waste in accordance with 40 CFR 262. The Waste Handling organization is responsible for the management and onsite disposal of site-derived waste. Site Environmental Compliance is responsible for the disposal of waste shipped offsite for disposal.

Site-generated hazardous and universal waste, as defined by the *Resource Conservation and Recovery Act of 1976* (RCRA), is managed in accordance with the WIPP Hazardous Waste Management Program described in WP 02-RC.01. Site-generated hazardous waste is disposed of at offsite permitted hazardous waste Treatment, Storage, or Disposal Facilities (TSDF). The waste disposal process is initiated by using a *Request for Disposal* (WP 02-RC3108) to start the disposal process for all waste except those managed by the *Waste Isolation Pilot Plant Pollution Prevention Program Plan* (WP 02-EC.11). The *Waste Isolation Pilot Plant Pollution Prevention Program Plan* implements the requirements of DOE Order 436.1, encouraging source reduction, waste minimization, pollution prevention, and the acquisition of materials and supplies manufactured with recycled content. Site-generated hazardous waste is accumulated in a satellite accumulation area or a less-than-90-day storage area, where it is managed in accordance with *Waste Accumulation Area Inspections* (WP 02-RC3109), which implements the requirements of 40 CFR 273, 20.4.1 NMAC, and 40 CFR 262.34. Hazardous and universal waste is

stored in applicable less than 90-day storage area(s) designated on the surface and in the UG before disposal. Completion of the disposal process is accomplished using *Shipment of Waste* (WP 08-NT3103).

Site Environmental Compliance administers the Hazardous Waste Management Program at the WIPP facility. The managers of the departments generating the hazardous waste are responsible for controlling and managing the hazardous waste generated by their organization. Quality Assurance (QA) is responsible for the evaluation of disposal facilities for inclusion in the Quality Supplier's List and oversight of site waste management activities. Assigned custodians are responsible for managing satellite accumulation areas and less than 90-day storage areas under their control. Site Environmental Compliance and Operations are each responsible for oversight of satellite accumulation areas and less-than-90-day accumulation areas as well as assisting in the packaging of waste for transport. Industrial Safety and Hygiene (IS&H) is responsible for providing employees involved in the management of hazardous waste with information on hazardous properties, safe handling of the waste, and identifying the appropriate personal protective equipment (PPE) for handling hazardous waste. Site Environmental Compliance is responsible for providing appropriate Waste Containers, packaging waste in preparation for shipment to permitted TSDFs, and coordinating hazardous waste shipments to TSDFs. These waste management processes are conducted with consultation and shipping approval by Transportation. Details of the organizational structure and responsibilities of the Hazardous Waste Management Program are described in WP 02-RC.01. The NWP organizational structure is summarized in Chapter 17.0.

Employees who handle site-derived waste are qualified as Waste Handling Technicians, Waste Handling Engineers, and Radiological Control Technicians (RCTs), or may be trainees operating under direct supervision of qualified Waste Handling Technicians, Waste Handling Engineers, and RCTs as described in WP 05-WH1036. Employees handling hazardous or universal waste are required to complete and maintain hazardous waste worker training as described in WP 02-RC.01. Personnel directly involved in the transportation of hazardous material (HAZMAT) are required to be trained in accordance with 49 CFR 172, Subpart H, and DOE Order 460.1C. Additional training, such as radiological training (Chapter 7.0), may be required commensurate with responsibilities. All WIPP employees receive General Employee Training (GET), which includes training concerning the WIPP waste minimization and pollution prevention goals, philosophy, and practices as well as hazard communication. Additional information concerning training development, maintenance, and implementation is described in Chapter 12.0. Program documents referenced in this chapter are summarized in Table 9.3-1.

Table 9.3-1. Program References

Document Number	Title
DOE/CBFO 09-3442	*CBFO Integrated Safety Management System Description*
DOE/WIPP 04-3310	*CBFO/NWP Environmental Policy Statement*
WP 02-EC.11	*Waste Isolation Pilot Plant Pollution Prevention Program Plan*
WP 02-RC.01	*Hazardous and Universal Waste Management Plan*
WP 02-RC3109	*Waste Accumulation Area Inspections*
WP 05-WH1025	*CH Waste Downloading and Emplacement*
WP 05-WH1036	*Site-Derived Mixed Waste Handling*
WP 08-NT3103	*Shipment of Waste*
WP 12-IH.02-4	*WIPP Industrial Hygiene Program – Hazard Communication and Hazardous Material Management Plan*

9.4 RADIOACTIVE AND HAZARDOUS WASTE STREAMS AND SOURCES

WIPP is a permitted hazardous waste disposal facility for TRU Waste generated by the defense-related activities of the U.S. government and shipped to WIPP for disposal, as described in Chapter 2.0. The WIPP generates site-derived and site-generated waste. Details of the waste streams, their sources, and inventories are described in Section 9.4.2. Typically, there are minimal gaseous waste streams at WIPP. These gaseous waste streams would include calibration gasses, non-punctured aerosol cans, or fire extinguishers.

9.4.1 Waste Management Process

The overall Waste Management Plan at the WIPP facility includes policies, programs, and procedures that encompass the management of TRU Waste shipped to WIPP for disposal, site-derived waste generated and disposed of at WIPP, and site-generated hazardous wastes that are managed at WIPP and disposed of at offsite permitted TSDFs. The Environmental Policy Statement (DOE/WIPP 04-3310) specifies that operations and activities at the WIPP will:

- Seek to achieve pollution prevention through safe, responsible, and cost-effective methods.
- Identify goals and performance measures to continually improve our performance.
- Ensure effective implementation through oversight and self-assessments.
- Correct incidents or conditions that endanger health, safety, or the environment.
- Use environmentally preferable products and services when feasible.
- Strive to diminish consumption of natural resources through reuse of materials, use of recycled materials, and conservation of energy and water.
- Conduct activities in compliance with environmental requirements applicable to the operation of WIPP through the implementation of programs, plans, practices, and procedures.

Administrative and operational practices for the management of site-derived and site-generated waste have been established to ensure effective management of waste, as described in Section 9.3. WP 12-IH.02-4, discussed in Chapter 8.0, is used to control the acquisition (i.e., requisition and procurement), use, handling, and storage of non-radiological HAZMAT and chemicals. Restricted materials are identified that require written IS&H / Site Environmental Compliance management approval before purchase and are controlled through the chemical management program during their life cycle until they are consumed or designated as waste. WP 02-EC.11 is implemented in a manner consistent with the requirements specified in 48 CFR 970.5204-2, “Laws, Regulations, and DOE Directives.” As part of waste minimization, chemical inventories are evaluated before new chemicals are brought onto the site.

9.4.2 Waste Sources and Characteristics

CH TRU Waste Handling is performed in the CH portion of the WHB. RH TRU Waste Handling is performed in the RH portion of the WHB. TRU Wastes are disposed of in the WIPP UG disposal area. Waste disposed of at WIPP contains solids and very little liquids in compliance with the WIPP WAC (DOE/WIPP 02-3122). Gaseous waste is not allowed in the waste shipped to the WIPP. Management of the TRU Waste disposal operations and maintenance of the WIPP facility result in the generation of site-derived and site-generated waste.

Site-Derived Waste: Waste derived from handling the TRU Waste that is contaminated with TRU waste characterized for disposal at the WIPP in accordance with the HWFP is considered a site-derived waste. Site-derived waste may be generated during the TRU Waste Handling process; during maintenance and operations of the TRU Waste Handling facilities, as described in Chapter 2.0; and during decontamination of the TRU Waste Handling facilities or equipment. However, as noted in the HWFP, Section D-4d(6) "Every reasonable effort to minimize the amount of derived waste, while providing for the health and safety of personnel, will be made." The waste may be composed of the following:

- Decontaminating liquids.
- Water.
- Salt.
- Swipes.
- Other filtration media.
- Particulate air filters associated with effluent filtration:
  - Moderate filters.
  - High-efficiency filters.
  - HEPA filters.
- Protective clothing and PPE.
- Soil.
- Rags.
- Waste from spill response.
- Sampling and decontamination debris.
- Other similar waste.

Site-derived waste characteristics are based on knowledge of the contaminating TRU Waste, which is maintained in the WIPP Waste Data System (WDS). Site-derived waste is a mixed waste and may also be considered a hazardous waste or PCB waste based on the characteristics of the original waste. Site-derived waste is managed and disposed of at WIPP in accordance with WP 05-WH1036, as described in Section 9.3, which implements the waste management and disposal requirements of the HWFP as well as the PCB disposal requirements.

Site-Generated Waste: Site-generated hazardous waste does not come from a particular process but is generated during the performance of maintenance and operations of the WIPP facilities and equipment. Site-generated hazardous waste and the volumes in inventory vary based on circumstances. Typically, only satellite accumulation areas that are actively in use and the less than 90-day storage area contain hazardous waste. Site-generated waste typically includes paints drained from punctured aerosol cans and waste generated from the maintenance and operations of the non-Waste Handling WIPP facilities. The waste typically includes oils, coolants, solvents, batteries, and other solid waste, and water removed from the UG during de-watering activities. Site-generated waste is managed and accumulated under the hazardous and universal waste standards as described in Section 9.3. Site-generated wastes may also result from radioactive sources/incidents not associated with TRU Waste Handling. These wastes may not be disposed of in the WIPP UG, but must be disposed of at a DOE- or U.S. Nuclear Regulatory Commission (NRC)-licensed disposal facility. Site-generated low-level and mixed low-level waste is processed in accordance with WP 02-RC3110. The generation of site-generated hazardous waste is

managed in accordance with WP 02-RC3108, which results in a record of the source, date, and volumes and the ultimate disposition of each waste at a permitted facility. This information is also entered into the material listing and disposition record.

9.4.3 Waste Handling or Treatment Systems

WIPP is a permitted hazardous waste facility for the receipt, management, storage, and disposal of TRU and TRU Mixed Waste. The WIPP Waste Handling systems for CH and RH TRU Waste are described in Chapter 2.0. WIPP is not a permitted hazardous waste treatment facility. Site-generated hazardous waste is not typically treated, although regulatory requirements enable generator treatment in certain circumstances. Site-derived waste may be treated, as needed, to adjust pH and solidify liquids before disposal as described in WP 05-WH1036. Site-derived waste is disposed of as CH TRU Waste in accordance with WP 05-WH1025.

9.5 REFERENCES

10 CFR 830, “Nuclear Safety Management,” *Code of Federal Regulations*. U.S. Government Printing Office, Washington, DC.

10 CFR 835, “Occupational Radiation Protection,” *Code of Federal Regulations*. U.S. Government Printing Office, Washington, DC.

10 CFR 851, “Worker Safety and Health Program,” *Code of Federal Regulations*. U.S. Government Printing Office, Washington, DC.

29 CFR 1910, “Occupational Safety and Health Standards,” Section 1910.120, “Hazardous Materials Operations and Emergency Response,” Subpart H, “Hazardous Materials,” *Code of Federal Regulations*. U.S. Government Printing Office, Washington, DC.

40 CFR 260, “Hazardous Waste Management System: General.” U.S. Environmental Protection Agency Regulations Implementing the *Resource Conservation and Recovery Act of 1976, Code of Federal Regulations*. U.S. Government Printing Office, Washington, DC.

40 CFR 261, “Identification and Listing of Hazardous Waste.” U.S. Environmental Protection Agency Regulations Implementing the *Resource Conservation and Recovery Act of 1976, Code of Federal Regulations*. U.S. Government Printing Office, Washington, DC.

40 CFR 262, “Standards Applicable to Generators of Hazardous Waste,” Section 262.34, “Accumulation Time.” U.S. Environmental Protection Agency Regulations Implementing the *Resource Conservation and Recovery Act of 1976, Code of Federal Regulations*. U.S. Government Printing Office, Washington, DC.

40 CFR 263, “Standards Applicable to Transporters of Hazardous Waste.” U.S. Environmental Protection Agency Regulations Implementing the *Resource Conservation and Recovery Act of 1976, Code of Federal Regulations*. U.S. Government Printing Office, Washington, DC.

40 CFR 264, “Standards for Owners and Operators of Hazardous Waste Treatment, Storage, and Disposal Facilities.” U.S. Environmental Protection Agency Regulations Implementing the *Resource Conservation and Recovery Act of 1976, Code of Federal Regulations*. U.S. Government Printing Office, Washington, DC.

40 CFR 265, “Interim Status Standards for Owners and Operators of Hazardous Waste Treatment, Storage, and Disposal Facilities.” U.S. Environmental Protection Agency Regulations Implementing the *Resource Conservation and Recovery Act of 1976*, *Code of Federal Regulations*. U.S. Government Printing Office, Washington, DC.

40 CFR 266, “Standards for the Management of Specific Hazardous Waste and Specific Types of Hazardous Waste Management Facilities.” U.S. Environmental Protection Agency Regulations Implementing the *Resource Conservation and Recovery Act of 1976*, *Code of Federal Regulations*. U.S. Government Printing Office, Washington, DC.

40 CFR 267, “Standards for Owners and Operators of Hazardous Waste Facilities Operating under a Standardized Permit.” U.S. Environmental Protection Agency Regulations Implementing the *Resource Conservation and Recovery Act of 1976*, *Code of Federal Regulations*. U.S. Government Printing Office, Washington, DC.

40 CFR 268, “Land Disposal Restrictions.” U.S. Environmental Protection Agency Regulations Implementing the *Resource Conservation and Recovery Act of 1976*, *Code of Federal Regulations*. U.S. Government Printing Office, Washington, DC.

40 CFR 273, “Standards for Universal Waste Management.” U.S. Environmental Protection Agency Regulations Implementing the *Resource Conservation and Recovery Act of 1976*, *Code of Federal Regulations*. U.S. Government Printing Office, Washington, DC.

40 CFR 761, “Polychlorinated Biphenyls (PCB) Manufacturing, Processing, Distribution in Commerce, and Use Prohibitions,” *Code of Federal Regulations*. U.S. Government Printing Office, Washington, DC.

40 CFR 761, “Polychlorinated Biphenyls (PCB) Manufacturing, Processing, Distribution in Commerce, and Use Prohibitions,” Subpart C, “Marking of PCBs and PCB Items,” *Code of Federal Regulations*. U.S. Government Printing Office, Washington, DC.

40 CFR 761, “Polychlorinated Biphenyls (PCB) Manufacturing, Processing, Distribution in Commerce, and Use Prohibitions,” Subpart D, “Storage and Disposal,” *Code of Federal Regulations*. U.S. Government Printing Office, Washington, DC.

40 CFR 761, “Polychlorinated Biphenyls (PCB) Manufacturing, Processing, Distribution in Commerce, and Use Prohibitions,” Subpart G, “PCB Spill Cleanup Policy,” *Code of Federal Regulations*. U.S. Government Printing Office, Washington, DC.

48 CFR 970, “DOE Management and Operating Contracts,” Section 5204-2, “Laws, Regulations, and DOE Directives,” *Code of Federal Regulations*. U.S. Government Printing Office, Washington, DC.

48 CFR 970, “DOE Management and Operating Contracts,” Section 5223-1, “Integration of Environment, Safety, and Health into Work Planning and Execution,” *Code of Federal Regulations*. U.S. Government Printing Office, Washington, DC.

49 CFR 172, “Hazardous Materials Table, Special Provisions, Hazardous Materials Communications, Emergency Response Information, and Training Requirements and Security Plans,” Subpart H, “Training,” *Code of Federal Regulations*. U.S. Government Printing Office, Washington, DC.

20.4.1 NMAC, “Hazardous Waste Management,” *New Mexico Administrative Code*, as amended.

DOE/CBFO 09-3442, *CBFO Integrated Safety Management System Description* (current revision), U.S. Department of Energy, Carlsbad Field Office, Carlsbad, NM.

DOE Order 435.1, Change 1, *Radioactive Waste Management*, January 9, 2007, U.S. Department of Energy, Washington, DC.

DOE Order 436.1, *Departmental Sustainability*, May 2, 2011, U.S. Department of Energy, Washington, DC.

DOE Order 458.1, Change 2, *Radiation Protection of the Public and the Environment*, June 6, 2011, U.S. Department of Energy, Washington, DC.

DOE Order 460.1C, *Packaging and Transportation Safety*, May 14, 2010, U.S. Department of Energy, Washington, DC.

DOE-STD-3009-94, CN3. *Preparation Guide for U.S. Department of Energy Nonreactor Nuclear Facility Documented Safety Analyses*, March 2006, U.S. Department of Energy, Washington, D.C.

DOE-STD-3009-2014, *Preparation of Nonreactor Nuclear Facility Documented Safety Analysis*, November 2014, U.S. Department of Energy, Washington, DC.

DOE/WIPP 02-3122, *Transuranic Waste Acceptance Criteria for the Waste Isolation Pilot Plant* (WIPP WAC) (current revision), U.S. Department of Energy, Carlsbad Field Office, Carlsbad, NM.

DOE/WIPP 04-3310, *CBFO/NWP Environmental Policy Statement* (current revision), U.S. Department of Energy, Carlsbad Field Office, Carlsbad, NM.

EPA 2013, Letter from W. Stenger (Director, Multimedia Planning and Permitting Division, U.S. Environmental Protection Agency, Region 6) to Jose R. Franco (Manager, U.S. Department of Energy, Carlsbad Field Office), dated May 21, 2013, reauthorizing WIPP for PCB disposal in accordance with the Conditions of Approval, U.S. Environmental Protection Agency, Dallas, TX.

HWFP, *Waste Isolation Pilot Plant Hazardous Waste Facility Permit* NM4890139088-TSDF (current revision), New Mexico Environment Department, Santa Fe, NM.

WIPP-021, *Hazards Analysis for the Waste Isolation Pilot Plant Transuranic Waste Handling Safety Basis*, Revision 6, Nuclear Waste Partnership LLC, Carlsbad, NM.

WP 02-EC.11, *Waste Isolation Pilot Plant Pollution Prevention Program Plan* (current revision), Nuclear Waste Partnership LLC, Carlsbad, NM.

WP 02-RC.01, *Hazardous and Universal Waste Management Plan* (current revision), Nuclear Waste Partnership LLC, Carlsbad, NM.

WP 02-RC3108, *Request for Disposal*, Management Control Procedure (current revision), Nuclear Waste Partnership LLC, Carlsbad, NM.

WP 02-RC3109, *Waste Accumulation Area Inspections*, Management Control Procedure (current revision), Nuclear Waste Partnership LLC, Carlsbad, NM.

WP 02-RC3110, *Low-Level and Mixed Low-level Waste Characterization for Off-Site Release for Disposal*, Management Control Procedure (current revision), Nuclear Waste Partnership LLC, Carlsbad, NM.

WP 05-WH1025, *CH Waste Downloading and Emplacement* (current revision), Nuclear Waste Partnership LLC Carlsbad, NM.

WP 05-WH1036, *Site-derived Mixed Waste Handling* (current revision), Nuclear Waste Partnership LLC, Carlsbad, NM.

WP 08-NT3103, *Shipment of Waste*, Management Control Procedure (current revision), Nuclear Waste Partnership LLC, Carlsbad, NM.

WP 12-IH.02-4, *WIPP Industrial Hygiene Program – Hazard Communication and Hazardous Materials Management Plan* (current revision), Nuclear Waste Partnership LLC, Carlsbad, NM.

WP 12-RE3003, *Radiological Release of Potentially Contaminated Materials, Waste, and Items*, Nuclear Waste Partnership LLC, Carlsbad, NM.

Table of Contents

10.0 INITIAL TESTING, IN SERVICE SURVEILLANCE, AND MAINTENANCE 10-1
10.1 Introduction 10-1
10.2 Requirements 10-2
10.3 Initial Testing Program 10-3
10.4 In Service Surveillance Program 10-4
10.5 Maintenance Program 10-5
10.6 References 10-6

List of Tables

Table 10.1-1 Program References 10-2

This page intentionally left blank

10.0 INITIAL TESTING, IN SERVICE SURVEILLANCE, AND MAINTENANCE

10.1 INTRODUCTION

This chapter summarizes the Initial Testing, In Service Surveillance, and Maintenance Programs at the Waste Isolation Pilot Plant (WIPP) as they relate to facility safety per the U.S. Department of Energy (DOE) Standard DOE-STD-3009-2014, *Preparation of Nonreactor Nuclear Facility Documented Safety Analysis*. The format of this chapter was left as described in DOE-STD-3009-94, CN3, for Revision 5 of the Documented Safety Analysis (DSA), as allowed by DOE-STD-3009-2014. The Safety Management Program (SMP) Chapters (7.0–18.0) will be reformatted as a consolidated Chapter 7.0 for Revision 6 of the DSA. This chapter presents information demonstrating that testing is performed to ensure the tested Structures, Systems, and Components (SSCs); other systems that perform important defense-in-depth functions; equipment relied on for the safe operation, safe shutdown of the nuclear facility, and for maintaining the facility in a safe shutdown condition as documented in the safety basis (e.g., DSA); and safety support systems meet their functional requirements and performance criteria such that the WIPP operations have reasonable assurance SSCs fulfill the normal and safety functions described in this DSA.

The following key elements (KEs) apply to SSCs identified in accordance with DOE Order 433.1B:

- **KE 10-1**: Development and implementation of In Service Inspections for DFs.
- **KE 10-2**: Testing, calibration, operability and preventive/corrective maintenance in accordance with applicable code requirements, manufacturer recommendations, established technical requirements, and engineering judgement consistent with tracking, trending, and failure history.
- **KE 10-3**: Tracking and trending of the performance and deficiencies of the equipment covered by KE 10-2 above.

For safety analysis purposes, the key attributes (KAs) of the WIPP Initial Testing, In Service Surveillance, and Maintenance Programs described in this chapter are as follows:

- KA 10-1: The initial testing of specified items, services, and processes is controlled through procedures that address the implementation requirements for the Initial Testing Program.
- KA 10-2: The In Service Inspection Program ensures that testing, calibration, or inspection requirements are applied to operational equipment; Safety SSCs; DFs; other systems that perform important defense-in-depth functions; equipment relied on for the safe operation, safe shutdown of the nuclear facility, and for maintaining the facility in a safe shutdown condition as documented in the safety basis (e.g., DSA); and safety support systems to maintain operation of the facility as described in this DSA.
- KA 10-3: Tests are controlled, planned, performed, and documented. Inspection points are identified in the inspection procedures. Characteristics to be inspected, methods of inspection, and acceptance criteria are specified. Acceptance parameters and other inspection or acceptance test requirements are specified as part of the design documentation and work planning process. Technically qualified personnel, other than those who performed or directly supervised the work, perform inspections and acceptance tests.
- KA 10-4: Instruments and equipment used for verifying conformance to requirements are calibrated at specified intervals, and maintained to required accuracy limits.

- KA 10-5: The Maintenance Program ensures that maintenance activities are conducted to preserve and restore the availability, operability, and reliability of Safety SSCs; other systems that perform important defense-in-depth functions; equipment relied on for the safe operation, safe shutdown of the nuclear facility, and for maintaining the facility in a safe shutdown condition as documented in the safety basis (e.g., DSA); and safety support systems, which provides a high degree of confidence that facility equipment wear is appropriately identified and corrected where necessary.
- KA 10-6: Post-maintenance testing is performed to verify that components fulfill their design function before being returned to service after maintenance.

Program documents referenced in this chapter are summarized in Table 10.1-1.

Table 10.1-1 Program References

Document Number	Title
GPDD SDD	*General Plant Design Description (GPDD) System Design Description (SDD)*(SDD GPDD)
WP 04-CO.01	*Conduct of Operations* (procedure series)
WP 09-SU.01	*WIPP Start Up Test Program*
WP 09-CN3018	*Design Verification*
WP 10-AD.01	*Metrology Program*
WP 10-AD3028	*Calibration and Control of Measurement and Test Equipment*
WP 10-WC.03	*NWP Equipment Calibration Program*
WP 10-WC3010	*Periodic Maintenance Administration and Controlled Document Processing*
WP 10-WC3011	*Work Control Process*
WP 10-WC3014	*Periodic Maintenance Activity Screening Process*
WP 10-WC3017	*Post-Maintenance Testing*
WP 12-NS3017	*In Service Inspection of WIPP Design Features*
WP 13-QA1006	*Quality Assurance Plant Inspections*
DOE/WIPP 06-3335	*Waste Isolation Pilot Plant Nuclear Maintenance Management Program*

10.2 REQUIREMENTS

The standards, regulations, and DOE Orders that are required to establish the Initial Testing, In Service Surveillance, and Maintenance Programs at the WIPP include the following:

- 10 CFR 830, “Nuclear Safety Management.”
- 30 CFR 57, “Safety and Health Standards – Underground Metal and Nonmetal Mines.”
- DOE Order 420.1C, *Facility Safety.*
- DOE Order 422.1, *Conduct of Operations.*
- DOE Order 426.2, *Personnel Selection, Training, Qualification and Certification Requirements for DOE Nuclear Facilities.*

- DOE Order 430.1B, Change 2, *Real Property Asset Management.*
- DOE Order 433.1B, *Maintenance Management Program for DOE Nuclear Facilities.*
- DOE-STD-1073-2003, *Configuration Management Program.*

Guides also used to establish the Maintenance Program at the WIPP include the following:

- DOE Guide 433.1A, *Nuclear Facility Maintenance Management Program Guide for Use with DOE Order 433.1B.*

10.3 INITIAL TESTING PROGRAM

Testing of the WIPP Safety SSCs; other systems that perform important defense-in-depth functions; equipment relied on for the safe operation, safe shutdown of the nuclear facility, and for maintaining the facility in a safe shutdown condition as documented in the safety basis (e.g., DSA); and safety support systems is required by the *SDD General Plant Design Description* and the Nuclear Waste Partnership LLC (NWP) Quality Assurance Program described in Chapter 14.0. The WIPP Initial Testing Program verifies and documents the operation of plant SSCs according to specifications and/or other site approved design documents.

WP 09-SU.01 establishes the controls for verification and documentation that Safety SSCs; other systems that perform important defense-in-depth functions; equipment relied on for the safe operation, safe shutdown of the nuclear facility, and for maintaining the facility in a safe shutdown condition as documented in the safety basis (e.g., DSA); and safety support systems meet established design criteria and functional requirements of approved test procedures. Tests are required to be controlled, planned, performed, and documented. Modification work orders or test procedures are developed per WP 09-SU.01 and require identification of applicable test requirements, plans, and procedures; the item or work product tested; name of tester; type of observation and method of testing; test criteria or reference documents used to determine acceptance; results and acceptability of the test; and measuring and test equipment, including calibration information. A startup test may be a formal startup test, an acceptance test, or a post-modification retest.

- Startup tests document SSC performance and operability as installed at WIPP and ensure that any deviations from design requirements are reviewed for acceptability before relying on the SSC. Startup tests may include testing documentation from the manufacturer, cognizant system engineer, or elsewhere that demonstrates that the SSC meets system design requirements.
- Startup/post-modification tests/retests are specifically written to test the subject SSC to the engineering and design specifications, which are documented by the cognizant system engineer in the test/retest section of the modification work order in accordance with WP 09-SU.01.

Startup tests/retests are reviewed and approved by a qualified startup test engineer. WP 09-SU.01 specifies the qualifications and responsibilities of the startup test engineers.

The responsible Operations organization typically reviews and participates in startup testing and retesting, accepting, as applicable, the SSC upon successful completion of the testing.

Readiness for initial operations, including restart after significant facility modification, is confirmed through the graded performance of operational readiness reviews or readiness assessments.

10.4 IN SERVICE SURVEILLANCE PROGRAM

The In Service Surveillance Program addresses testing and calibrations, surveillance test equipment and results trending, programmatic review, and training of personnel performing surveillances.

- **Testing and Calibrations**: In service testing and calibration is applied to Safety SSCs; other systems that perform important defense-in-depth functions; equipment relied on for the safe operation, safe shutdown of the nuclear facility, and for maintaining the facility in a safe shutdown condition as documented in the safety basis (e.g., DSA); and safety support systems. WP 10-WC3014 outlines the screening process and provides the means for evaluating and documenting decisions relating to in service testing and calibration requirements. In service testing and calibration ensures the safe and reliable operation of the aforementioned systems/equipment. In service surveillance testing and calibration is performed in accordance with approved procedures and conducted in accordance with established schedules as described in WP 10-WC3010. In service surveillance is also performed by implementation of the WP 04-CO.01 series of procedures. WP 04-CO.01-2 describes the development and use of round sheets that identify the equipment to be monitored. Operators use the round sheets to record key equipment parameters, including when equipment parameters exceed maximum/minimum values. Supervisory personnel and cognizant system engineers review the round sheet data, including a review for adverse trends. Identified trends are evaluated to determine whether immediate corrective action is required and appropriate cognizant personnel are informed of the trend to identify whether other actions are required.
- **Surveillance Test Equipment and Results Trending**: Measuring and test equipment used in performing in service surveillance testing and calibration is controlled and calibrated per WP 10-AD3028. Notice of Deficiency/Out-of-Tolerance Notification and Trending of historical data obtained from surveillance tests and other maintenance activities is performed per WP 10-AD3028 and WP 10-WC3010.
- **Design Features**: Design features (DFs) are features that perform a credited safety function, but do not require, or infrequently require, maintenance or surveillance. These are identified in Chapter 3.0. The Surveillance Requirements (SRs) for these DFs are located in WP 12-NS3017, *In Service Inspection of WIPP Design Features*. In service inspection procedure WP 12-NS3017, *In Service Inspection of WIPP Design Features*, provides the basis for the selected inspection frequency for each DF. The frequencies were selected to ensure early detection of precursors to degradation, damage, and other conditions that could impair the DF's safety function, and were generally based on (a) the susceptibility of the DF to change; (b) the potential for operational damage; and (3) the robustness of the DF compared to its operating environment and lengthy periodicity of major maintenance activities. In addition, the attributes selected for the inspection, as shown in the in service inspection procedure, were based on (1) the goal of early detection of precursors to degradation, damage, and other conditions that could result in a DF being unable to perform its credited function; and (2) the salience of the attribute to the safety function of the DF.
- **Programmatic Review*:*** Programmatic reviews are conducted to ensure the In Service Surveillance Program remains effective and personnel are trained for the activity as described in Chapter 14.0.
- **Training of Personnel Who Perform Surveillance Testing**: The managers of personnel performing surveillance testing have the overall responsibility and authority for the content and effective conduct of the training and qualification programs within their organizations. Training and Qualification Programs are developed, based on input from managers, and administered by the WIPP Technical Training Department as described in Chapter 12.0.

- **Underground Ventilation Filtration System / Interim Ventilation System (UVFS/IVS)**: A corrosion condition monitoring program will be implemented for the IVS ductwork after the system begins operation. UVFS ductwork is assessed with regard to accumulation of salt, including at the base of the Exhaust Shaft. This is implemented through a program of periodic inspections and continued monitoring.

10.5 MAINTENANCE PROGRAM

The Maintenance Program is described in DOE/WIPP 06-3335. The Maintenance Program is implemented to ensure that maintenance activities are conducted to preserve and restore the availability, operability, and reliability of the WIPP SSCs important to the operation of the facility. This includes Safety Class (SC) and Safety Significant (SS) SSCs; other systems that perform important defense-in-depth functions; equipment relied on for the safe operation, safe shutdown of the nuclear facility, and for maintaining the facility in a safe shutdown condition as documented in the safety basis (e.g., DSA); and safety support systems. Maintenance work activities are performed by the WIPP maintenance personnel or subcontractors in accordance with WP 10-WC3011. Subcontracted activities are also specified in a statement of work.

The Work Control Program has a significant role in the Maintenance Program and includes the following elements:

- A configuration management process established to ensure the integrity of the SSCs; other systems that perform important defense-in-depth functions; equipment relied on for the safe operation, safe shutdown of the nuclear facility, and for maintaining the facility in a safe shutdown condition as documented in the safety basis (e.g., DSA); and safety support systems.
- A prioritization process used to properly emphasize safety requirements, the maintenance backlog, system availability and operability, and requirements for those infrastructure elements identified as part of the nuclear facility safety basis.
- A process for feedback and improvement established to provide relevant information regarding operations, maintenance, and assessment efforts.
- Maintenance procedures and other work-related documents (e.g., drawings and instructions) to provide appropriate work direction and to ensure that maintenance is performed safely, correctly, and efficiently.
- An interface with the cognizant system engineer to support maintenance activities associated with assigned systems.
- An accurate maintenance history.
- Post-maintenance testing process established to verify that Safety SSCs; other systems that perform important defense-in-depth functions; equipment relied on for the safe operation, safe shutdown of the nuclear facility, and for maintaining the facility in a safe shutdown condition as documented in the safety basis (e.g., DSA); and safety support systems will fulfill their design function when returned to service after maintenance.
- Control and calibration of measuring and test equipment and monitoring and data collection equipment.
- Maintenance history and trending process established for trending the maintenance history of plant equipment, sustaining system health and reliability, and implementing the requirements of

DOE-STD-1073-2003 to identify improvements in the Maintenance Program, as well as needed equipment modifications.

The maintenance organization, responsibilities, and interfaces are prescribed in the maintenance and work control procedure sets. The WIPP organizational structure is summarized in Chapter 17.0. Chapter 17.0 describes the managers' responsibilities for maintenance personnel training.

Surface maintenance facilities include a mechanical shop, an electrical shop, and an area for instrumentation and control calibration. Measurement and test equipment and tools for specific jobs are checked out from a tool crib. There is also a maintenance shop in the north end of the Underground (UG) for making equipment repairs.

10.6 REFERENCES

10 CFR 830, "Nuclear Safety Management," *Code of Federal Regulations*. U.S. Government Printing Office, Washington, DC.

30 CFR 57, "Safety and Health Standards – Underground Metal and Nonmetal Mines," *Code of Federal Regulations*. U.S. Government Printing Office, Washington, DC.

DOE Guide 433.1A, *Nuclear Facility Maintenance Management Program Guide for Use with DOE Order 433.1B*, September 12, 2011, U.S. Department of Energy, Washington, DC.

DOE Order 420.1C, *Facility Safety*, December 13, 2012, U.S. Department of Energy, Washington, DC.

DOE Order 422.1, *Conduct of Operations*, June 29, 2010, U.S. Department of Energy, Washington, DC.

DOE Order 426.2, *Personnel Selection, Training, Qualification, and Certification Requirements for DOE Nuclear Facilities*, April 21, 2010, U.S. Department of Energy, Washington, DC.

DOE Order 430.1B, Change 2, *Real Property Asset Management*, March 10, 2009, U.S. Department of Energy, Washington, DC.

DOE Order 433.1B, *Maintenance Management Program for DOE Nuclear Facilities*, April 21, 2010, U.S. Department of Energy, Washington, DC.

DOE-STD-1073-2003, *Configuration Management Program*, October 2003, U.S. Department of Energy, Washington, DC.

DOE-STD-3009-94, CN3. *Preparation Guide for U.S. Department of Energy Nonreactor Nuclear Facility Documented Safety Analyses*, March 2006, U.S. Department of Energy, Washington, DC.

DOE-STD-3009-2014, *Preparation of Nonreactor Nuclear Facility Documented Safety Analysis*, November 2014, U.S. Department of Energy, Washington, DC.

DOE/WIPP 06-3335, *Waste Isolation Pilot Plant Nuclear Maintenance Management Program* (current revision), U.S. Department of Energy, Carlsbad Field Office, Carlsbad, NM.

GPDD, *General Plant Design Description (GPDD) System Design Description (SDD)* (current revision), Nuclear Waste Partnership LLC, Carlsbad, NM.

WP 04-CO.01, *Conduct of Operations* (current revision), Nuclear Waste Partnership LLC, Carlsbad, NM.

WP 09-CN3018, *Design Verification* (current revision), Nuclear Waste Partnership LLC, Carlsbad, NM.

WP 09-SU.01, *WIPP Start Up Test Program* (current revision), Nuclear Waste Partnership LLC, Carlsbad, NM.

WP 10-AD.01, *Metrology Program* (current revision), Nuclear Waste Partnership LLC, Carlsbad, NM.

WP 10-AD3028, *Calibration and Control of Measurement and Test Equipment*, Management Control Procedure (current revision), Nuclear Waste Partnership LLC, Carlsbad, NM.

WP 10-WC.03, *NWP Equipment Calibration Program* (current revision), Nuclear Waste Partnership LLC, Carlsbad, NM.

WP 10-WC3010, *Periodic Maintenance Administration and Controlled Document Processing* (current revision), Nuclear Waste Partnership LLC, Carlsbad, NM.

WP 10-WC3011, *Work Control Process*, (current revision), Nuclear Waste Partnership LLC, Carlsbad, NM.

WP 10-WC3014, *Periodic Maintenance Activity Screening Process*, Nuclear Waste Partnership LLC, Carlsbad, NM.

WP 10-WC3017, *Post Maintenance Testing* (current revision), Nuclear Waste Partnership LLC, Carlsbad, NM.

WP 12-NS3017, *In Service Inspection of WIPP Design Features*, (current revision), Nuclear Waste Partnership LLC, Carlsbad, NM.

WP 13-QA1006, *Quality Assurance Plant Inspections* (current revision), Nuclear Waste Partnership LLC, Carlsbad, NM.

This page intentionally left blank

Table of Contents

11.0 OPERATIONAL SAFETY 11-1
11.1 Introduction 11-1
11.2 Requirements 11-3
11.3 Conduct of Operations 11-3
11.4 Fire Protection 11-7
11.4.1 Fire Hazards 11-7
11.4.2 Fire Protection Program and Organization 11-7
11.4.3 Combustible Loading Control 11-10
11.4.4 Firefighting Capabilities 11-11
11.4.5 Firefighting Readiness Assurance 11-12
11.5 Ground Control 11-12
11.6 References 11-13

List of Tables

Table 11.3-1. Program References 11-7
Table 11.4-1. Fire Protection Program References 11-10

This page intentionally left blank

11.0 OPERATIONAL SAFETY

11.1 INTRODUCTION

This chapter summarizes the key elements (KEs) of the Waste Isolation Pilot Plant (WIPP) programs that provide for operational safety through conduct of operations, fire protection, and ground control as they relate to facility safety per the U.S. Department of Energy (DOE) Standard DOE-STD-3009-2014, *Preparation of Nonreactor Nuclear Facility Documented Safety Analysis*. The format of this chapter was left as described in DOE-STD-3009-94, CN3, for Revision 5 of the Documented Safety Analysis (DSA), as allowed by DOE-STD-3009-2014, but with the addition of a section on ground control. The Safety Management Program (SMP) Chapters (7.0–18.0) will be reformatted as a consolidated Chapter 7.0 for Revision 6 of the DSA.

Conduct of operations specifically focuses on the bases of operations programs specified by DOE Order 422.1, *Conduct of Operations*. This order addresses many of the topics covered in the *Code of Federal Regulations*, Title 10, Part 830 (10 CFR 830), "Nuclear Safety Management," Subpart B, "Safety Basis Requirements" (e.g., management, organization, the institutional safety provisions, procedures, training, and human factors) and, where appropriate, references are made to other chapters in this DSA that address the topics. Opportunities for improvements in Conduct of Operations as identified in the Accident Investigation Board Reports (March and April 2014, and April 2015) and other sources were evaluated and incorporated into the program as found appropriate.

The WIPP Fire Protection Program (FPP) has been enhanced based on lessons learned from the February 5, 2014, Underground (UG) haul truck fire. The Accident Investigation Board Reports were reviewed for programmatic improvement opportunities. Fire protection enhancements include upgrading UG fire protection equipment, improved controls for combustible loading, prioritized scheduling of maintenance to manage fire protection controls, new fire protection equipment, improvements in the engineering review of fire loading and maintenance process, and including higher frequencies of fires in safety analysis.

Ground control activities, which mitigate the potential and consequences for unplanned rock fall from the back (i.e., ceiling) and ribs (i.e., sides) of underground openings, are performed in accordance with 30 CFR 57, Subpart B, "Ground Control."

The KEs of the WIPP Operational Safety Program are:

- **KE 11-1**: Routine maintenance and inspection of non-waste handling vehicles in the UG for leaks and accumulation of combustible materials (fire protection).
- **KE 11-2**: Formal FPE combustible control inspections to include inspection criteria, specified frequency of inspections, documentation of identified issues, issue disposition, tracking and trending of issues, and performance metrics.
- **KE 11-3**: Operability and testing of equipment (audible, visual) used for abnormal event communication/notification between workers (both aboveground and in the UG) and the Central Monitoring Room (CMR).
- **KE 11-4**: Placement of fuel barrier of absorbent materials at the static Waste Face when waste emplacement or retrieval has not occurred for a period of 10 days.
- **KE 11-5**: Fire prevention/suppression controls include the following KEs:

  - Underground diesel powered equipment is evaluated for fire risk in accordance with NFPA 122. All equipment determined to pose an unacceptable fire risk in the NFPA 122 analysis will be protected with an automatic fire suppression system prior to use.
  - Areas in the UG where there is an increased combustible loading (e.g., refueling station, maintenance shop, combustible storage area, maintenance offices, lunch room, oil storage area) will be protected by automatic fire suppression systems.
  - Ignition sources (e.g., hot work, designated smoking areas, portable heaters, electrical equipment) are controlled in accordance with the WIPP FPP and Design Control Program.
  - Underground combustible materials are controlled in accordance with the WIPP FPP (e.g., combustible control zone around personnel conveyances, combustible load permit process).

- **KE 11-6**: Hoisting and Rigging Program which protects safety Structures, Systems, and Components (SSCs), waste packaging, and personnel from dropped loads.
- **KE 11-7**: Mine entrance requirements impacting personnel safety (e.g., Continuous Air Monitor (CAM) operation, radiological conditions, ventilation capabilities, personnel training, personnel limits for in service conveyances, back-up power).
- **KE 11-8**: Mine evacuation requirements (e.g., unobstructed planned escape routes, mine exit markings, communications, Abnormal Operations Procedures).
- **KE 11-9**: Equipment deficiency tracking (including equipment in reduced status) that identifies, tracks, and evaluates safety impacts and implements compensatory measures until equipment is returned to service.
- **KE 11-10**: Ground control inspections are conducted routinely, and remedial actions performed for unstable ground conditions by qualified personnel.
- **KE 11-11**: Maintenance and configuration control of ground control equipment.
- **KE 11-12**: Procedures address the actions to be performed by operators in response to CMR notifications, annunciators, and other types of facility displays that indicate an abnormal condition.

The key attributes (KAs) of the WIPP Operational Safety Programs which describe how the SMPs meet the requirements of site procedures, and state and federal requirements are described in this chapter are as follows:

- KA 11-1: The WIPP facilities implement the requirements of DOE Order 422.1, and WIPP facilities have an implementing matrix for the guidelines specified in DOE Order 422.1.
- KA 11-2: The fire hazards for the WIPP nuclear facilities are defined in the facility-specific Fire Hazard Analysis (FHA), which meets the requirements of DOE Order 420.1C, *Facility Safety*. Life safety code evaluations are identified in the facility FHA development as specified in DOE Order 420.1C.
- KA 11-3: WIPP implements a Fire Prevention Program that meets or exceeds the requirements of nationally recognized codes and standards such as DOE Order 420.1C, the National Fire Protection Association *Uniform Fire Code*™ (NFPA 1), *Standard for Fire Protection for Facilities Handling Radioactive Materials* (NFPA 801), and the Mine Safety and Health Administration (MSHA) as evaluated in the FHA.

- KA 11-4: The WIPP FPP includes maintaining a trained Fire Protection Engineer (FPE), a trained and equipped fire brigade, and a trained fire protection system testing and maintenance staff.
- KA 11-5: The WIPP fire alarm and suppression systems are functionally tested, inspected, and maintained to meet NFPA and DOE standards and requirements.

11.2 REQUIREMENTS

The regulations, standards, MSHA requirements, and DOE Orders that are required to establish the operational safety programs at the WIPP facility include the following:

- 10 CFR 851, "Worker Safety and Health Program."
- 29 CFR 1910.120, "Occupational Safety and Health Standards – Hazardous Waste Operations and Emergency Response."
- 29 CFR 1910.147, "The Control of Hazardous Energy (Lockout/Tagout)."
- 29 CFR 1926, "Safety and Health Regulations for Construction."
- 30 CFR 57, "Safety and Health Standards – Underground Metal and Nonmetal Mines."
- DOE Order 151.1C, *Comprehensive Emergency Management System.*
- DOE Order 420.1C, *Facility Safety*, Chapter II, "Fire Protection."
- DOE Order 422.1, *Conduct of Operations.*

11.3 CONDUCT OF OPERATIONS

This section summarizes the applicability of the conduct of operations to WIPP and identifies the salient features of the Conduct of Operations Program required by DOE Order 422.1. Operation of the WIPP is conducted in accordance with the WIPP *Conduct of Operations* (WP 04-CO.01 (procedure series)), approved procedures (Table 11.3-1), and the *Waste Isolation Pilot Plant Technical Safety Requirements* (DOE/WIPP 07-3373). This DSA considers the term "operations" as reflecting those daily activities, resources, management, and communication required to support the WIPP facility in disposing of defense-generated Transuranic (TRU) Waste.

- **Organization and Administration**: WP04-CO.01-1, *Conduct of Operations Program – Operations Organization and Administration*, establishes policies, programs, and procedures that define an effective operations organization, including the following elements:
  - Organizational roles, responsibilities, authority, and accountability;
  - Adequacy of personnel and material resources to accomplish operations;
  - Monitoring and self-assessment of operations;
  - Management and worker accountability for the safe performance of work;
  - Management training, qualification, and succession (supervisors achieve certification when required for their duties, WIPP Operations currently has no management positions requiring a specific certification.);
  - Methods for hazards analysis and implementation of hazards controls in the work planning and execution process; and

  - Methods for approving, posting, maintaining, and controlling access to electronic operations documents (procedures, drawings, schedules, maintenance actions, etc.).

- **Shift Routines and Operating Practices**: WP 04-CO.01-2, *Conduct of Operations Program – Shift Routines and Operating Practices,* discusses the shift routines and operating practices that apply to the WIPP operating and support personnel. Operation of the WIPP facility is performed in accordance with approved operating procedures by qualified personnel. Operations shift routines and operating practices include adherence to established safety requirements, prompt notification of operating personnel regarding changes in facility status, operator tours and inspections of work areas, wearing of personal protective equipment (PPE), responding to indications, resetting of protective devices, authority to operate equipment, and shift operating bases. The responsibility for maintaining proper configuration of the facility and authorizing changes of general surface and UG equipment rests with the Facility Shift Manager (FSM). Changes in equipment status are communicated to the Central Monitoring Room Operator (CMRO).

- **Control Area Activities**: The control areas at WIPP consist of the CMR and the Hoist Control Room at each of the three hoists (i.e., Salt Handling Shaft, Air Intake Shaft, and Waste Shaft). Access to and formality and discipline of operations in the control areas are addressed procedurally in WP 04-CO.01-3, *Conduct of Operations Program – Control Area Activities for WIPP*.

- **Communications**: WP 04-CO.01-4, *Conduct of Operations Program – Communications,* addresses the requirements for operational communications at WIPP. Communications at WIPP are accomplished through the use of the public address system, the site notification system via plectrons, radios, pagers, mine phones, and telephones. The CMR is the focal point for communications between surface and UG operations. Personnel are responsible for conducting emergency and operational communications in accordance with procedures and for reporting defective communication equipment. The proper use of audible communication equipment is essential during emergencies and for operational clarity. Approved communication terminology and methods are specified. Emergency communications are periodically tested to ensure functionality.

- **Control of On-shift Training**: Equipment/systems qualification training occurs in the form of instructed on-the-job training (OJT), following established training programs to maintain instructional uniformity. The responsibilities and OJT process are identified in WP 14-TR3308, *On-the-Job Training,* and WP 04-CO.01-5, *Conduct of Operations Program – Control of On-Shift Training*.

- **Investigation of Abnormal Events**: WP 04-CO.01-6, *Conduct of Operations Program – Investigation of Abnormal Events, Conditions, and Trends,* establishes the requirements for prompt investigation of incidents to determine the cause, assess the extent of impact, determine whether the event is reportable to the DOE, and identify corrective actions to prevent recurrence. WP 15-MD3102, *Event Investigation*, describes the methodology to investigate and document the incident/event and identify the causes, the lessons to be learned, and the corrective actions.

- **Notifications**: WP 04-CO.01-7, *Conduct of Operations Program – Notifications,* establishes the requirements for timely notifications to the DOE and other appropriate agencies of events, conditions, or issues that have or may cause safety, health, Quality Assurance (QA), security or environmental concerns at the WIPP facility. An event is a real-time occurrence or incident that may involve safety, health, quality, security, or environmental considerations and includes but is not limited to industrial accidents, Waste Handling accidents, fires, personnel injuries, equipment damage or malfunction, severe weather, higher than expected levels of contamination or radiation

that exceed requirements or limits, and operating anomalies such as loss of power or a Technical Safety Requirement (TSR) violation.

- **Control of Equipment and System Status**: Facility equipment and system status is controlled to ensure that facility configuration is maintained. Aspects of the controls include status change authorization and reporting; equipment and systems alignment; lockout and tagout; work authorization and approval; post-maintenance equipment testing and return to service; status of alarms; temporary modification control; and distribution and control of equipment and systems documents as described in WP 04-CO.01-8, *Conduct of Operations Program – Control of Equipment and System Status*.

  The FSM is the senior operating person on shift and is tasked with maintaining an overview of operations. The FSM has the responsibility for maintaining proper configuration and authorizing changes of general surface and UG equipment and systems. The Hoisting Manager has the responsibility for maintaining proper configuration and authorizing changes of hoisting equipment and systems. The Waste Operations Manager has the responsibility for maintaining proper configuration of and authorizing changes to Waste Handling equipment and systems.

  The Central Monitoring System (CMS), with display in the CMR, monitors the status of plant systems and equipment including the Waste Handling Building (WHB) ventilation, UG ventilation, electrical distribution, CAMs, plant air, and the WHB and Support Building chilled water systems. The CMRO monitors the CMS display and notifies the FSM of alarm conditions. The CMS also provides limited control capability of key plant equipment.

- **Lockouts and Tagouts**: WP 04-CO.01-9, *Conduct of Operations Program – Lockout/Tagout* establishes the WIPP Lockout/Tagout Program required by DOE Order 422.1 and "The Control of Hazardous Energy (Lockout/Tagout)" (29 CFR 1910.147). WP 04-AD3011, *Equipment Lockout/Tagout*, implements the lockout/tagout activities used for isolating, blocking, and securing facility systems and components; the placement, removal, and transfer of the lockout/tagout devices (tags and locks); and the methods to verify the effectiveness of the lockout/tagout.

- **Independent Verification**: WP 04-CO.01-10, *Conduct of Operations Program – Independent Verification*, and WP 04-AD3005, *Administrative Control of System Lineups* provide requirements for independent verification and instructions for the following:

  – Determining which systems require lineups and which systems require independent verification.

  – Developing system lineups.

  – Performing complete or partial system lineups.

  – The performance and review of system lineups.

  – Documentation for system lineups.

- **Log Keeping**: Formal written or electronic documentation of facility operations activities occurs through log maintenance. At a minimum, a log is maintained in the CMR in accordance with WP 04-CO.01-11, *Conduct of Operations Program – Logkeeping*. Guidance on the use of logbooks and recording information is provided in WP 04-AD3008, *Shift Operating Logs and Round Sheets*.

- **Operations Turnover**: Guidelines are provided for operations shift turnover in WP 04-CO.01-12, *Conduct of Operations Program – Turnover and Assumption of Responsibilities*, to ensure that the information required to adequately perform shift

responsibilities is documented by the current shift and reviewed by the oncoming shift. The primary purpose of turnover is to ensure that oncoming personnel have an accurate picture of the overall facility status, including items such as conditions related to abnormal lineups, status of major components, planned or in-progress surveillances or activities, and other special instructions.

- **Operations Aspects of Facility Chemistry and Unique Processes**: The unique processes (WP 04-CO.01-13, *Conduct of Operations Program – Control of Interrelated Processes*) relevant to WIPP include experiments conducted by external entities in the north end of the WIPP UG. The experiments are considered when planning power outages, ground control activities, or changes in ventilation that have the potential to affect the experiments. VOC monitoring is conducted by the site environmental group. The VOC measurements can be affected by chemicals in the UG depending on the configuration of the ventilation. Operations personnel coordinate with monitoring personnel when the airflow configuration could affect a specific sample.
- **Required Reading**: The WIPP Required Reading Program is established in MP 1.30, *Required Reading,* and WP 04-CO.01-14, *Conduct of Operations Program – Required Reading*. Required reading material includes but is not limited to procedures, equipment changes, operating experience information, and other information needed to keep operating personnel aware of facility activities and conditions, including safety information. The Required Reading Program ensures that designated individuals read, understand, and remain informed of important information. Completion of required reading is documented.
- **Timely Orders to Operators**: Orders to operators (WP 04-CO.01-15, *Conduct of Operations Program – Timely Orders to Operators*) are essential tools to communicate special conditions and instructions to shift personnel. Timely orders are used when activities or conditions are limited in time and do not require plant operating procedures. Orders to operators provide a method for management to rapidly distribute essential information and administrative instructions to personnel. Orders to operators are segregated into daily and long-term orders to facilitate review by shift personnel. Orders to operators do not supersede approved procedures.
- **Operations Procedures**: WP 04-CO.01-16, *Conduct of Operations Program – Operations Procedures* describes the requirements for developing and maintaining accurate, understandable written technical procedures that ensure safe and effective facility and equipment operation at WIPP. Procedures are developed for anticipated operations, evolutions, tests, and abnormal or emergency situations. Operators perform the procedures as written, and will stop work and notify management when procedures cannot be executed as written.
- **Operator Aid Postings**: WP 04-MD3003, *Control of Operator Aids,* and WP 04-CO.01-17, *Conduct of Operations Program – Operation Aid Postings* are implemented to control the use of operator aids and ensure that only up-to-date information is contained in the operator aids. Operator aids include copies of procedures, system drawings, information tags, and graphs that help operators perform their duties.
- **Equipment and Piping Labeling**: WP 09-CN3021, *Component Indices* and WP 04-CO.01-18, *Conduct of Operations Program – Equipment and Piping Labeling,* establish the requirements for controlling, and the method for assignment of, equipment numbering and labeling, including numbering instrument loops, valves, pipes, dampers, cables, conduit runs, and structures. WP 09-CN3021 also addresses the specific responsibilities for maintaining the WIPP SSC component indices.

Table 11.3-1. Program References

Document Number	Title
MP 1.30	*Required Reading*
WP 04-CO.01	*Conduct of Operations* (procedure series)
WP 04-AD3005	*Administrative Control of System Lineups*
WP 04-AD3008	*Shift Operating Logs and Round Sheets*
WP 04-AD3011	*Equipment Lockout/Tagout*
WP 04-MD3003	*Control of Operator Aids*
WP 09-CN3021	*Component Indices*
WP 14-TR3308	*On-the-Job Training*
WP 15-MD3102	*Event Investigation*

11.4 FIRE PROTECTION

11.4.1 Fire Hazards

The main fire hazards to the material processed at the WIPP Waste Handling facilities presented in Chapter 3.0 are the Waste Handling equipment used to move the Waste Containers. Other fire hazards include combustibles such as wood pallets, crates, plywood, and paper associated with work activities; plastic signs, plastic containers, plastic slipsheets, and shrink wrap; PPE; petroleum-based combustibles (e.g., grease, hydraulic fluid); hydrogen gas generated by lead-acid batteries on facility equipment and from battery-charging stations; flammable gas and flammable compressed gases in cylinders; and flammable material in the Waste Containers (e.g., cellulose, gases, rubber, and plastics).

Non-radioactive pyrophoric materials are prohibited and pyrophoric radioactive materials may only occur in residual amounts (≤ 1 percent by weight) in both Contact-Handled (CH) and Remote-Handled (RH) TRU Waste per DOE/WIPP 02-3122, *Transuranic Waste Acceptance Criteria for the Waste Isolation Pilot Plant* (WIPP WAC). Generator sites' adherence to the WIPP WAC controls the fire hazards of the waste shipped to WIPP. A thermal event, including fire, occurred in a non-conforming drum in February 2014.

WIPP-023, *Fire Hazard Analysis for the Waste Isolation Pilot Plant*, assesses the adequacy of the WIPP fire detection, alarm, and suppression systems to mitigate anticipated fires. Where applicable, deficiencies are dispositioned in accordance with FPP requirements.

To prevent fires from starting or propagating, combustible loading in the Exhaust Filter Building (EFB) and in the WHB and all UG areas is procedurally controlled through WP 12-FP3003, *Combustible Material Checks for the Waste Handling Building, Exhaust Filter Building, and Underground*, as discussed in Chapters 3.0, 4.0, and 5.0.

11.4.2 Fire Protection Program and Organization

WP 12-FP.01, *WIPP Fire Protection Program*, establishes the requirements for a comprehensive fire and related hazards protection program for the WIPP facility based on DOE Order 420.1C; MSHA requirements; NFPA 801 requirements and other NFPA codes and standards listed in WIPP-049; and other applicable federal, state, and local fire safety requirements. The WIPP FPP incorporates the

principles of the Nuclear Waste Partnership LLC (NWP) Safety Management Policies for Integrated Safety Management (DOE/CBFO 09-3442, *Integrated Safety Management System Description*) described in Chapter 17.0. The objectives of the FPP are to minimize the potential for the following:

- Occurrence of a fire or related event.
- Fires that cause an unacceptable onsite or offsite release of radiological or non-radiological hazardous material that could impact the health and safety of employees, the public, or the environment.
- Unacceptable interruption of vital DOE programs as a result of fire and related hazards.
- Property loss from fire exceeding limits established by DOE.
- Fire damage to critical process controls and Safety Significant (SS) SSCs.
- Personnel injury due to exposure to fire and/or products of combustion.
- Personnel endangerment due to inability to egress due to smoke obscuring exit route.

Objectives are met through design and programmatic controls. Fire safety practices are required of all employees and subcontractors during their daily work and are an integral part of all activities at WIPP.

The WIPP design incorporates automatic fire detection, alarm, and suppression systems in buildings; automatic suppression on UG equipment; and the use of noncombustible or fire-resistant materials in building construction.

The FPP was enhanced after the accident investigation following the UG fire event of February 2014 to improve life safety considerations and now complies with fire protection and suppression currently used in commercial mining operations in the United States. Programmatic elements supporting the emphasis on life safety include:

- ML-1 classification of all liquid fuel vehicles. This classification requires that:
  - Maintenance activities are performed using Work Control Documents.
  - Cog engineer/FPE approval required for work activities.
  - QA oversight/inspection requirements are required.
  - Procurements require a scope of work.
  - Vendors are on the approved vendor (QSL) list.
  - Modifications are controlled.
  - Currently existing equipment that was not purchased under the ML-1 requirements are handled through a commercial grade dedication effort.
- Installation of a mine-wide notification system to provide personnel with immediate notification of a UG fire and necessary information on proper emergency response, which will be operable at the time of implementation of this DSA.
- Electric powered fire response vehicles with fire suppression equipment are strategically placed in the UG according to ongoing activities with available trained personnel.

Fire hazards are controlled throughout the WIPP by the implementation of programmatic controls described in WP 12-FP.01 and fire protection procedures as summarized in Table 11.4-1. Specific

Administrative Controls (SACs) related to the FPP are discussed in Chapter 4.0. The main elements of the FPP include the following:

- FPP and facility assessments, self-surveys, and corrective actions to meet DOE Orders.
- FPEs perform reviews to determine the FPP implementation and to evaluate any impacts on fire safety, fire protection systems, and life safety, and support qualified Unreviewed Safety Question (USQ) reviewers in evaluating impacts on the safety basis.
- Facility, system, and equipment design reviews.
- An FHA integrated with this DSA and the TSRs for all significant WIPP structures, including new facilities that present unique or significant fire safety risks.
- Development and maintenance of emergency response plans and site pre-fire plans and procedures by Emergency Services, with Emergency Management and Fire Protection Engineering participation, that govern and facilitate all aspects of emergency response at WIPP.
- Inspection, maintenance, and testing of fire protection equipment and systems at regular intervals.
- Development and maintenance of a Life Safety and Fire Prevention Program that addresses topics including the following:
  - Exit and evacuation plans.
  - Building inspections.
  - Control of combustible materials.
  - Flammable and combustible controls.
  - Hot work control.
  - Impairment approvals and controls for temporary disabling of fire protection equipment/systems.
  - Protection from wildland fires.
- The occupants of the WIPP UG are protected from the effects of a fire through the following controls and programs in addition to KE 11-7 and KE 11-8:
  - UG occupant limits.
  - Marking of egress and non-egress pathways.
  - Use of miner’s lamps.
  - Use of W65 self-rescuer respirators and self-contained self-rescuers.
  - Personal notification and tracking system.
  - WIPP Combustible Control Program.
  - Area specific automatic fire suppression.

The FPP maintains procedures for Fire Protection system impairments (WP 12-FP3001, *Fire Protection Impairment*), hot work control (WP 12-FP3002, *Hot Work Permits*), and control of combustible material (WP 12-FP3003, *Combustible Material Checks for the Waste Handling Building, Exhaust Filter Building, and Underground*). The required fire control measures are for the purpose of decreasing the propagation possibility and consequences of fire to ensure protection of the workers and the public.

The WIPP FPP is principally administered through the Engineering Department. The Fire Protection Engineering Manager is responsible for the implementation of the WIPP FPP and for providing staffing and resources for maintaining the FPP, including cognizant system engineers for the Fire Alarm System and Fire Suppression System. Fire Protection Engineering is responsible for administering the WIPP FPP and ensuring its integration with this DSA, the FHA for WIPP (WIPP-023), subsequent FHAs of nuclear and nonnuclear buildings at the facility, and the *Waste Isolation Pilot Plant Hazardous Waste Facility Permit* (HWFP). NWP organizations are required to perform inspections, maintenance, and testing of fire protection systems and equipment. The Fire Brigade is made up of Emergency Services Technicians, the Emergency Response Team (ERT), and protective forces personnel, and is administered through the Emergency Management Group. Emergency response personnel are responsible for inspections of Fire Suppression Systems (FSSs) and responding to fires and other emergencies as described in WP 12-9, *WIPP Emergency Management Plan*. Emergency Services Technicians are responsible for keeping the assigned emergency apparatus in good operating condition. Details of the organizational structure and responsibilities of the WIPP FPP are described in WP 12-FP.01. The NWP organizational structure is summarized in Chapter 17.0.

Table 11.4-1. Fire Protection Program References

Document Number	Title
WP 12-9	*WIPP Emergency Management Plan*
WP 12-FP.01	*WIPP Fire Protection Program*
WP 12-FP3001	*Fire Protection Impairment*
WP 12-FP3002	*Hot Work Permits*
WP 12-FP3003	*Combustible Material Checks for the Waste Handling Building, Exhaust Filter Building, and Underground*
DOE/WIPP 11-3471	*Baseline Needs Assessment for the Waste Isolation Pilot Plant*

11.4.3 Combustible Loading Control

Combustible loading control is a significant part of the WIPP FPP. Combustible loading is procedurally controlled and is required by Administrative Controls (ACs) in the WIPP TSRs. Guidance and instructions for controlling the introduction, spacing, storage, and handling of ordinary combustibles, combustible/flammable liquids, and flammable gases in the WHB, the EFB, and the UG at the WIPP are described in WP 12-FP3003. Combustible loading controls for the WHB, EFB, and UG include vehicle restrictions, including vehicle types allowed and standoff distances in the WHB, active Disposal Room, near the disposal array, and near waste in transit in the UG. Combustible loading controls also place controls and restrictions on the use and storage of transient combustibles of flammable gas and flammable compressed gas in the WHB, EFB, and UG. Combustible loading control includes facility inspections, assessments, and Fire Protection Engineering reviews. Periodic inspections are performed to identify and correct potential fire hazards and/or conditions of noncompliance with WP 12-FP3003.

NWP Management has recently strengthened emphasis on minimization of UG combustibles by issuing Management Policy MP 6.9. This policy endorses an Only Essential Combustibles approach and consists of the following elements:

- Prevent unnecessary combustible materials from being taken below ground.
- Properly use and store flammable materials, liquids, and combustibles.
- Prompt removal and disposal of accumulations of combustible materials (good housekeeping).

- Proactively identify hazards and mitigate them.
- Communicate this policy to those who work at WIPP to ensure actions are conducted in a manner consistent with this policy.

WP 12-FP3006 enforces this policy and ensures that combustible materials, transient combustible materials, fossil-fueled equipment, flammable and combustible liquids, and flammable gases that are used in the UG are managed in accordance with applicable requirements delineated in DOE Order 420.1C, *Facility Safety*, NFPA 801, *Standard for Facilities Handling Radioactive Materials*, the *NWP Policy for Underground Combustible Controls*, WIPP 12-FP.01, *WIPP Fire Protection Program*, and the *WIPP Fire Hazards Analysis*.

11.4.4 Firefighting Capabilities

The WIPP Emergency Management organization develops and maintains emergency response plans and procedures that govern and facilitate all aspects of emergency response at the WIPP, including fire protection and mutual aid agreements for firefighting. The Emergency Response Program discusses the management of incidents, including radiological and chemical materials. Details of the WIPP Emergency Management Program are described in Chapter 15.0.

NWP performed a baseline needs assessment of the WIPP emergency response capabilities to meet the requirements of DOE Order 420.1C, in accordance with new directives, guidance, and expectations, including the *Comprehensive Emergency Management System* (DOE Order 151.1C) and related guides. Based on the identified hazards in the DSA and the Emergency Planning Hazards Assessment (EPHA), the required levels of service for each area were analyzed. The *Baseline Needs Assessment for the Waste Isolation Pilot Plant* (DOE/WIPP 11-3471) identifies the minimum resources necessary to respond to a fire and simultaneous medical emergency and options for implementation.

Emergency Services performs the review of the WIPP site pre-fire plans with participation by Emergency Management and FPEs. The pre-fire plans contain important firefighting information for each building at WIPP, such as the location of fire suppression equipment, hazardous materials (HAZMAT) (i.e., radiological and chemical), exits, and electrical panels. Upon receipt of a fire alarm, the FSM determines the location and notifies the responders of the location. The responders refer to the pre-fire plan to determine any special precautions. Pre-fire plans are reviewed and updated as necessary to accommodate any changes at the site.

Emergency Response maintains firefighting instructions in surface and UG fire response procedures that identify entry conditions, actions, exit conditions, and after exit actions from fire response conditions. Facility Operations maintains procedures for primary, alternate, and abnormal operation of the fire water supply system and equipment.

Firefighting equipment at WIPP includes two fully equipped pumper engines, associated firefighting equipment, and trained firefighters. A list of emergency equipment is provided in the HWFP. In addition, memoranda of understanding between the WIPP and key community organizations are important aspects of the available protective actions governed by legal cooperation agreements. The mutual aid agreement between the DOE and the Eddy County Commission provides for the actual assistance of the parties in the furnishing of fire protection for the Eddy County Fire District and the WIPP site. Additional information concerning the memoranda of understanding is described in Chapter 15.0.

Emergency Services Technicians, ERT members, and protective force personnel are trained firefighters who receive extensive onsite training, including cardiopulmonary resuscitation, hazardous waste worker,

hazardous waste responder, radiation worker, and fire response in accordance with the NFPA *Standard on Facility Fire Brigades* (NFPA 600). Details of training development, maintenance, and implementation are described in Chapter 12.0. Fire response for an UG fire at WIPP is described in the WIPP FHA (WIPP-023). The emphasis is on incipient response prior to and during UG evacuation to assure the life safety of UG personnel. Personnel not imminently involved in the fire will evacuate the UG. UG entry after evacuation is supported by a properly trained and equipped Mine Rescue Team. UG firefighting after evacuation is performed by the Mine Rescue Team only if needed to rescue unaccounted personnel.

Potential fires involving hydraulic oil or diesel fuel are of concern and the most common fire encountered in the U.S. Metal/Nonmetal Mining industry. The WIPP FPP places a restriction on hydraulic oil used for UG and Waste Handling equipment. In addition to proper hydraulic oil consideration, it is imperative that the WIPP UG equipment with automatic FSSs also incorporate automatic engine shutoff upon FSS operation to stop the flow of hydraulic oil and fuel. Equipment with automatic FSSs should be provided for evaluated UG diesel equipment with significant combustible liquid capacity, as required a hazard evaluation completed per NFPA-122.

11.4.5 Firefighting Readiness Assurance

The fire water supply and suppression system requires periodic inspections and surveillance to ensure system operability. The fire protection systems inspection, maintenance, and testing program require NWP organizations to perform inspection, maintenance, and testing of fire protection equipment and systems at regular intervals. Emergency Services Technicians conduct inspections of facility FSSs and emergency equipment and are responsible for keeping the assigned emergency apparatus in good operating condition. The inspections, maintenance, and testing are accomplished in accordance with applicable DOE directives and implementation guidance as described in WP 12-FP.01.

Exit and evacuation drills are performed periodically to maintain awareness and preparedness as described in WP 12-FP.01. Emergency Management conducts drills and exercises for the purpose of training and preparing for response to emergency events and validating elements of the Emergency Management Program for the WIPP as described in Chapter 15.0. The Emergency Management Exercise Program Plan for the current year and the five-year plan identify the planned exercises to validate the emergency response capabilities.

All fire protection inspection, maintenance, and testing documentation is maintained as records. FPEs initiate corrective actions required to resolve deficiencies identified during inspections, maintenance, or testing activities. Quality improvement, which addresses nonconformances and issues management, and records management, is discussed in Chapter 14.0.

11.5 GROUND CONTROL

The WIPP Ground Control Program incorporates requirements of 30 CFR 57 and includes visual inspections of openings, geotechnical monitoring, installation of ground support components, and analysis/mitigation of ground support component failures and potential ground failures. The results are compiled in annual report DOE/WIPP 02-3212, *Ground Control Annual Plan for the Waste Isolation Pilot Plant*. The Plan is updated to address developments in the WIPP ground support practices and materials and any changes in operational requirements. Results of periodic visual inspections and geotechnical field activities are compared with design criteria to ensure proper corrective measures are implemented. These measures include ground support (e.g., spot bolting, pattern bolting, supplemental bolting), removal of rock, floor milling, and mining. In the event ground control measures are not sufficient to ensure safety, areas of the underground may be closed.

Prior to performing routine ground control remediation (e.g., scaling), personnel must complete 30 CFR required training. Personnel performing additional remediation activities (e.g., bolting, milling, seal cutting, mining) are required to complete equipment specific qualifications and perform these activities in accordance with approved procedures.

Equipment utilized during ground control activities include geotechnical instrumentation, hybrid and liquid fueled bolting machines, seal cutter, and milling/mining machines. Maintenance (preventive and corrective) and calibration of this equipment falls under the WIPP Maintenance and Configuration Management programs.

11.6 REFERENCES

10 CFR 830, " Nuclear Safety Management," Subpart B, "Safety Basis Requirements," *Code of Federal Regulations*. U.S. Government Printing Office, Washington, DC.

10 CFR 851, "Worker Safety and Health Program," *Code of Federal Regulations*. U.S. Government Printing Office, Washington, DC.

29 CFR 1910, "Occupational Safety and Health Standards," Section 1910.120, "Hazardous Materials Operations and Emergency Response," Subpart H, "Hazardous Materials," *Code of Federal Regulations*. U.S. Government Printing Office, Washington, DC.

29 CFR 1910, "Occupational Safety and Health Standards," Section 1910.147, "The Control of Hazardous Energy (Lockout/Tagout)," *Code of Federal Regulations*. U.S. Government Printing Office, Washington, DC.

29 CFR 1926, "Safety and Health Regulations for Construction," *Code of Federal Regulations*. U.S. Government Printing Office, Washington, DC.

30 CFR 57, "Safety and Health Standards – Underground Metal and Nonmetal Mines," *Code of Federal Regulations*. U.S. Government Printing Office, Washington, DC.

30 CFR 57, "Safety and Health Standards – Underground Metal and Nonmetal Mines," Subpart B, "Ground Control," *Code of Federal Regulations*. U.S. Government Printing Office, Washington, DC.

DOE Order 151.1C, *Comprehensive Emergency Management System*, November 2, 2005, U.S. Department of Energy, Washington, DC.

DOE Order 420.1C, *Facility Safety*, December 13, 2012, U.S. Department of Energy, Washington, DC.

DOE Order 422.1, *Conduct of Operations*, June 29, 2010, U.S. Department of Energy, Washington, DC.

DOE-STD-3009-94, CN3, *Preparation Guide for U.S. Department of Energy Nonreactor Nuclear Facility Documented Safety Analyses*, March 2006, U.S. Department of Energy, Washington, DC.

DOE-STD-3009-2014, *Preparation of Nonreactor Nuclear Facility Documented Safety Analysis*, November 2014, U.S. Department of Energy, Washington, DC.

DOE/CBFO 09-3442, *CBFO Integrated Safety Management System Description* (current revision), U.S. Department of Energy, Carlsbad Field Office, Carlsbad, NM.

DOE/WIPP 02-3122, *Transuranic Waste Acceptance Criteria for the Waste Isolation Pilot Plant* (current revision), U.S. Department of Energy, Carlsbad Field Office, Carlsbad, NM.

DOE/WIPP 02-3212, *Ground Control Annual Plan for the Waste Isolation Pilot Plant* (current revision), U.S. Department of Energy, Carlsbad Field Office, Carlsbad, NM.

DOE/WIPP 07-3373, *Waste Isolation Pilot Plant Technical Safety Requirements* (current revision), Nuclear Waste Partnership LLC, Carlsbad, NM.

DOE/WIPP 11-3471, *Baseline Needs Assessment for the Waste Isolation Pilot Plant* (current revision), U.S. Department of Energy, Carlsbad Field Office, Carlsbad, NM.

HWFP, *Waste Isolation Pilot Plant Hazardous Waste Facility Permit* NM4890139088-TSDF (current revision), New Mexico Environment Department, Santa Fe, NM.

MP 1.30. *Required Reading*, Management Policy (current revision), Nuclear Waste Partnership LLC, Carlsbad, NM.

MP 6.9, *WIPP Underground Combustible Controls* (current revision), Nuclear Waste Partnership LLC, Carlsbad, NM.

NFPA 1, 2006, *Uniform Fire Code*™, 2006 Edition, National Fire Protection Association, Quincy, MA.

NFPA 122, *Standard for Fire Prevention and Control in Metal/Nonmetal Mining and Metal Mineral Processing Facilities*, 2015 Edition, National Fire Protection Association, Quincy, MA.

NFPA 600, *Standard on Facility Fire Brigades*, 2015 Edition, National Fire Protection Association, Quincy, MA.

NFPA 801, 2014, *Standard for Fire protection for Facilities Handling Radioactive Materials*, 2014 Edition, National Fire Protection Association, Quincy, MA.

WIPP-023, *Fire Hazard Analysis for the Waste Isolation Pilot Plant*, Revision 7, Nuclear Waste Partnership LLC, Carlsbad, NM.

WIPP-049, *NFPA Codes and Standards Applicable for Use at the Waste Isolation Pilot Plant*, Revision 2, Nuclear Waste Partnership LLC, Carlsbad, NM.

WP 04-AD3005, *Administrative Control of System Lineups*, Management Control Procedure (current revision), Nuclear Waste Partnership LLC, Carlsbad, NM.

WP 04-AD3008, *Shift Operating Logs and Round Sheets*, Management Control Procedure (current revision), Nuclear Waste Partnership LLC, Carlsbad, NM.

WP 04-AD3011, *Equipment Lockout/Tagout*, Management Control Procedure (current revision), Nuclear Waste Partnership LLC, Carlsbad, NM.

WP 04-CO.01, *Conduct of Operations* (current revision), Nuclear Waste Partnership LLC, Carlsbad, NM.

WP 04-MD3003, *Control of Operator Aids*, Management Control Procedure (current revision), Nuclear Waste Partnership LLC, Carlsbad, NM.

WP 09-CN3021, *Component Indices*, Management Control Procedure (current revision), Nuclear Waste Partnership LLC, Carlsbad, NM.

WP 12-9, *WIPP Emergency Management Plan* (current revision), Nuclear Waste Partnership LLC, Carlsbad, NM.

WP 12-FP.01, *WIPP Fire Protection Program* (current revision), Nuclear Waste Partnership LLC, Carlsbad, NM.

WP 12-FP3001, *Fire Protection Impairment*, Management Control Procedure (current revision), Nuclear Waste Partnership LLC, Carlsbad, NM.

WP 12-FP3002, *Hot Work Permits*, Management Control Procedure (current revision), Nuclear Waste Partnership LLC, Carlsbad, NM.

WP 12-FP3003, *Combustible Material Checks for the Waste Handling Building, Exhaust Filter Building, and Underground*, Management Control Procedure (current revision), Nuclear Waste Partnership LLC, Carlsbad, NM.

WP 12-FP3006, *Combustible Permitting for the WIPP Underground*, Management Control Procedure (current revision) Nuclear Waste Partnership LLC, Carlsbad, NM.

WP 14-TR3308, *On-the-Job Training*, Management Control Procedure (current revision), Nuclear Waste Partnership LLC, Carlsbad, NM.

WP 15-MD3102, *Event Investigation* (current revision), Nuclear Waste Partnership LLC, Carlsbad, NM.

This page intentionally left blank

Table of Contents

12.0 PROCEDURES AND TRAINING 12-1
12.1 Introduction 12-1
12.2 Requirements 12-2
12.3 Procedure Program 12-2
12.3.1 Development of Procedures 12-3
12.3.2 Maintenance of Procedures 12-5
12.4 Training Program 12-5
12.4.1 Development of Training 12-6
12.4.2 Maintenance of Training 12-9
12.4.3 Modification of Training Materials 12-9
12.5 References 12-9

List of Tables

Table 12.3-1. Procedure Program References 12-3
Table 12.4-1. Training Program References 12-6

This page intentionally left blank

12.0 PROCEDURES AND TRAINING

12.1 INTRODUCTION

This chapter summarizes the essential characteristics of the Procedures and Training Programs at the Waste Isolation Pilot Plant (WIPP) as they relate to facility safety in accordance with the U.S. Department of Energy (DOE) Standard DOE-STD-3009-2014, *Preparation of Nonreactor Nuclear Facility Documented Safety Analysis*. The format of this chapter was left as described in DOE-STD-3009-94, CN3, for Revision 5 of the Documented Safety Analysis (DSA), as allowed by DOE-STD-3009-2014. The Safety Management Program (SMP) Chapters (7.0–18.0) will be reformatted as a consolidated Chapter 7.0 for Revision 6 of the DSA. The chapter describes the processes used to develop, verify, and validate the technical content of procedures and the WIPP training programs as well as the processes used to keep them current through feedback, periodic reviews, and continuous improvement processes. The ongoing implementation of these processes is a necessary part of safety assurance. Through their effective implementation, the WIPP facility is operated and maintained using established processes by personnel who are trained commensurate with their responsibilities.

The key elements (KEs) of the WIPP Procedures and Training are:

- **KE 12-1**: Preparation of procedures related to safe operation of the facility and/or safety Structures, Systems, and Components (SSCs) with participation by end users and appropriate subject matter experts, verified to be technically correct, validated to be workable as written.
- **KE 12-2**: Worker training and qualifications on responding to incidents (e.g., use of rescue equipment, assembly areas).
- **KE 12-3**: Training and qualification programs are designed and developed to ensure personnel obtain initial requisite knowledge and skills resulting in abilities to effectively execute assigned duties during normal, abnormal, and emergency conditions. Continuing training is provided to maintain requisite knowledge and skills as warranted for changes such as emergent Evaluation of the Safety of the Situation (ESS) documents. Personnel are not permitted to perform assigned duties independently until requisite training and qualification are complete.

For safety analysis purposes, the key attributes (KAs) of the WIPP procedures and training programs described in this chapter are as follows:

- KA 12-1: Work processes are controlled by approved procedures and management controls appropriate to the specific tasks to be performed.
- KA 12-2: Procedures are maintained under change control.
- KA 12-3: Procedures are periodically reviewed consistent with WP 15-PS3002, *Controlled Document Processing*.
- KA 12-4: Training includes incorporation of results from a formal “lessons learned” process.

12.2 REQUIREMENTS

The regulations, standards, and DOE Orders that form the basis for the WIPP procedures and training programs include the following:

- *Code of Federal Regulations*, Title 10, Part 851.23 (10 CFR 851.23), "Safety and Health Standards."
- 10 CFR 830 Subpart A, "Quality Assurance Requirements."
- 10 CFR 835, "Occupational Radiation Protection."
- 30 CFR Parts 47, 48, 49, 57, 58, & 62, "MSHA Safety Regulations."
- 40 CFR 260 Series and Part 270, "Protection of Environment."
- DOE Order 151.1C, *Comprehensive Emergency Management.*
- DOE Order 210.2A, *DOE Corporate Operating Experience Program.*
- DOE Order 414.1D, *Quality Assurance.*
- DOE Order 420.1C, *Facility Safety.*
- DOE Order 422.1, *Conduct of Operations.*
- DOE Order 426.2, *Personnel Selection, Training, Qualification, and Certification Requirements for DOE Nuclear Facilities.*
- DOE Order 435.1, *Radioactive Waste Management.*
- DOE Order 440.1B, *Worker Protection Program for DOE (Including the National Nuclear Security Administration) Federal Employees.*
- DOE Order 450.2, *Integrated Safety Management.*
- DOE Order 460.1C, *Packaging and Transportation Safety.*

12.3 PROCEDURE PROGRAM

The Procedure Program is designed to implement primary functions of the WIPP Integrated Safety Management System (ISMS) to provide administrative and technical manuals and procedures that describe processes used by WIPP employees and managers. Development and use of procedures ensure that WIPP program functions are effectively integrated and that program requirements are appropriately applied, as described in WP 15-GM.03, *Integrated Safety Management System Description*. The WIPP ISMS is based on the DOE integrated safety management guiding principles contained in DOE Order 450.2, *Integrated Safety Management*. The WIPP ISMS is reflected in the Nuclear Waste Partnership LLC (NWP) Safety Management Policy *Integrated Safety Management System Description* (WP 15-GM.03), which provides guidance for the development of safety management functions and identifies responsibilities for procedural adequacy, awareness and implementation. Fundamentally, it is imperative that operators, maintenance personnel, technicians, and technical personnel responsible for implementation of the safety basis are provided with well-developed, accurate, current, and approved procedures to perform their duties.

WP 04-CO.01, *Conduct of Operations* describes the series of procedures in the WIPP program and identifies the implementing procedures and guidance. The WP 04-CO.01 procedure series states that operation of the facility will be in accordance with approved operating procedures and will be performed

by qualified personnel. Formal written operating procedures are prepared for modifications that would affect the safety and/or the design of the facility as defined in this DSA. Procedures govern configuration control, maintenance, and calibration of the WIPP SSCs; other systems that perform important defense-in-depth functions; SSC support systems; and equipment relied on for safe operation, safe shutdown, and for maintenance of safe shutdown as documented in Chapter 3.0 of this DSA.

WP 13-1, *Nuclear Waste Partnership LLC Quality Assurance Program Description* requires that technical documents and procedures be reviewed for adequacy, correctness, and completeness before approval and issuance as controlled documents, as described in Chapter 14.0.

Documents relevant to implementation of the Procedure Program referenced in this chapter are listed in Table 12.3-1.

Table 12.3-1. Procedure Program References

Document Number	Title
WP 04-CO.01	*Conduct of Operations* (series of procedures)
WP 13-1	*Nuclear Waste Partnership LLC Quality Assurance Program Description*
WP 15-GM.03	*Integrated Safety Management System Description*
WP 15-PS.01	*Procedures Program*
WP 15-PS.2	*Procedure Writer's Guide*
WP 15-PS3002	*Controlled Document Processing*
WP 15-PS3004	*Verification and Validation*
WP 15-PS3103	*Document Distribution*

12.3.1 Development of Procedures

Procedures prescribe the actions and steps that are essential to safe and consistent performance of administrative, operations, maintenance, and technical activities to ensure that the facility is operated within its design bases. The Procedures Program is described in WP 15-PS.01, and includes both management and procedure writer roles, responsibilities, authorities, and authorities for development of procedures. Procedures are developed as described in WP 15-PS3002 and WP 15-PS.2. Instructions and guidance documents are used to supplement procedures and provide additional information to users. Procedures are selected for development based on the need for Administrative Controls (ACs) to do the following:

- Identify the associated activity's scope and boundaries.
- Implement hazard controls for identified hazards associated with the activity.
- Implement requirements identified by cognizant disciplines (e.g., system engineering, radiological protection, industrial hygiene).
- Provide action steps/work instructions to safely and compliantly execute the activity.
- Ensure users implement a current version of instructions to ensure proper implementation.

Procedures are required when a defined task or activity is to be performed that meets one of the following criteria:

1. Accomplishes work or activities defined in WP 13-1 or creates quality records.

2. Requires specific technical direction for operating equipment and/or systems included in the configuration management process.

3. Requires specific direction for physical activities that require repeatability and documented results, as described in WP 15-PS.2.

Technical procedures are broken down into two types, as described below:

1. **Technical procedures** prescribe precisely how to accomplish the various technical tasks associated with starting up, testing, operating, calibrating, and maintaining NWP equipment and systems. These procedures specify fixed tasks and define activities in a way that allows these operations to be performed safely and efficiently.

2. **Emergency, alarm response, and abnormal operating procedures** define the action steps to take when an abnormal condition exists. Emergency procedures address conditions that require immediate and absolute attention to mitigate problems, reestablish safety boundaries, and bring operations and equipment back within established operating parameters. Alarm response procedures address the actions to be performed in response to annunciators and other types of facility displays that indicate an abnormal condition. Abnormal operating procedures describe the actions to stabilize the facility and prevent further degradation of the safety envelope. The content and format of these procedure types are described in WP 15-PS.2 to ensure consistent format.

The cognizant organization manager assigns a trained procedure writer, who, along with a planning team, develops the technical content of procedures. They receive training as necessary to ensure that they are knowledgeable in the procedure process they are implementing. The procedure is written with a level of detail necessary to safely perform the activity. Independent or concurrent dual verification signoff is provided, when required. Acceptance criteria and other requirements in the procedure are identified so the user can determine whether the results are within the acceptable range. As Low As Reasonably Achievable (ALARA) principles for hazardous waste, chemicals, and radiological contamination are considered when developing the procedure. Applicable radiological hold and survey points are identified. Technical Safety Requirements (TSRs) and other applicable requirements or limits are identified.

Technical procedure correctness and compliance with regulatory requirements are verified through review by the technical authority and affected organizations (i.e., the organization responsible for interpreting and maintaining the WIPP site in compliance with the requirement). The draft procedure is then subjected to verification and user validation per WP 15-PS3004, where appropriate. The verification process ensures the procedure is technically correct, meets its intended purpose, and is consistent with source documents while the validation process ensures that the procedure is usable by assigned/specified personnel. After completion of review and validation, the procedure is evaluated via the Unreviewed Safety Question (USQ) process followed by approval by the designated approval authority.

In addition to technical procedures, preventive maintenance work control documents and maintenance work instructions are prepared for maintenance activities. These procedures and instructions are prepared by the planner and planning team using a similar process to that used to prepare technical procedures.

12.3.2 Maintenance of Procedures

Procedure issuance, use, and change is controlled in accordance with an established document control process that maintains and identifies current revisions of documents and obsolete or superseded documents, as described in Chapter 14.0. Existing procedures are periodically reviewed to compare baseline references to the technical content of the procedure and to verify that referenced documents are still applicable and correctly cited. Changes to procedures are made as necessary to incorporate new requirements, feedback from operations experience, changes in facility configuration, changes in the DSA or TSRs, changes in human/machine interfaces, or changes identified during reviews for consistency with the *Waste Isolation Pilot Plant Hazardous Waste Facility Permit* (HWFP). Changes to procedures mandate a technical review equivalent to the original review, in accordance with the controlled document processing procedure, that must be signed off by the cognizant organization manager before issuance as an approved change. USQ review is required for changes to procedures. These reviews maintain congruence between the safety basis, the facility's actual condition, the procedures, and the training for the procedures. Training and qualification for the use of new procedures and continuing training to address procedure changes are described in Section 12.4.

12.4 TRAINING PROGRAM

The WIPP Training Program is organized and managed to select, train, and qualify personnel to the requirements of DOE Order 426.2. The WIPP Training Program provides employees with the training to meet the ISMS guiding principle that "personnel will possess the experience, knowledge, skills, and abilities necessary to discharge their responsibilities in a safe, environmentally sound manner," as identified in the NWP policy for integrated safety management (WP 15-GM.03). The goal of the WIPP Training Program is to prepare personnel to carry out their job responsibilities and operate and maintain the WIPP facility in a safe and environmentally responsible and compliant manner using training elements that have been analyzed, designed, developed using the Systematic Approach to Training and kept current by the use of feedback and continuous improvement processes.

The WIPP Training Program is described in WP 14-TR.01, *WIPP Training Program* and the *Waste Isolation Pilot Plant Training Implementation Matrix* (TIM). The Training Program is designed and maintained to implement applicable regulatory and DOE requirements, including the requirements of 10 CFR 851.23 and DOE Order 426.2 for establishing performance-based training programs and the personnel qualification requirements for DOE nonreactor nuclear facilities. The training program addresses the development of a formal training program for personnel and site subcontractors in job-related subjects from fundamental technical skills and specialty training to supervisory and management skills. Training program policies and procedures define job function, responsibility, authority, and accountability of NWP personnel involved in managing, implementing, and conducting training. Documents relevant to the implementation of the training program referenced in this chapter are summarized in Table 12.4-1.

To achieve the training program objective, employees are provided with training relevant to their positions and commensurate with their responsibilities. All employees at WIPP, regardless of employer, receive General Employee Training (GET). GET includes an introduction to radiological protection, the *Resource Conservation and Recovery Act of 1976* (RCRA) (42 USC 6901, et seq.), hazard communication, emergency preparedness processes, and other relevant topics within 30 days of employment. In this way, everyone at the WIPP facility is provided basic training regarding safety and health, regulatory requirements, and emergency procedures. The training program provides employees exposed or potentially exposed to hazards with the appropriate initial and continuing health and safety training in accordance with 10 CFR 851.23. Operators, maintenance personnel, technicians, and technical

personnel receive additional classroom and/or on-the-job training (OJT) and qualification, as described in the TIM. The training is designed specifically to teach them how to perform their duties safely, and to ensure the facility's compliance with the regulations. Subcontractor personnel, including those who perform specialized activities, must meet WIPP training requirements for the job function to be performed or be supervised by a person who meets the training criteria.

Table 12.4-1. Training Program References

Document Number	Title
WP 04-CO.01	*Conduct of Operations* (series of procedures)
TIM	*Waste Isolation Pilot Plant Training Implementation Matrix*
WP 14-TR.01	*WIPP Training Program*
WP 14-TR3004	*Training Development*
WP 14-TR3301	*Administrative Review Board*
WP 14-TR3307	*Qualification Programs*
WP 14-TR3308	*On-the-Job Training*
WP 14-TR3309	*Training Evaluation*
WP 14-TR3311	*Vendor Training*
WP 14-TR3312	*Exceptions/Equivalencies and Extensions*
WP 15-GM.03	*Integrated Safety Management System Description*
WP 15-PA.01	*Operating Experience/Lessons Learned Program*

12.4.1 Development of Training

WP 14-TR.01 defines the systematic process used in the analysis, design, and development of the WIPP training programs. WP 14-TR3004 provides instructions for the development of WIPP training. The technical content of training is analyzed, designed, developed, implemented, and evaluated, using the following elements:

- Needs/job and task analysis.
- Development of learning objectives based on analysis results.
- Development of lesson plans, training guides, and examination materials.
- Assessment of trainee mastery of learning objectives.
- Evaluation of the effectiveness of training.

The degree of analysis (i.e., needs analysis, job analysis, and task analysis) will vary based on the hazard level or risk, task complexity, and job function. Using a graded approach that includes the relative importance to safety, safeguards, and security and the magnitude of any hazard involved, several options exist for analysis, as follows:

- A table-top method where a team of trainers, supervisors, and subject matter experts meet to identify duty areas, tasks within the duty area, and tasks to be included in the training program.
- Verification and validation of task list from similar facilities and job duty areas.

- Use of consensus-based content guides to determine training program content.

Job analyses are conducted for qualified positions to determine tasks for training for both normal and emergency duties, establish program goals, and define the scope of training program content. A detailed task analysis may be developed based on a graded approach. The graded approach takes into consideration the existing procedures controlling the activity and whether the consequence of performing the task improperly is of low consequence. For qualified positions, task analyses are performed and task-to-training matrices are developed that include a list of tasks, training determination, and training setting. Based on the training analysis conducted, training is developed and implemented. Materials to conduct training (e.g., lesson plans, OJT guides, training aids, and student materials) are then developed. During the actual training, trainee mastery of the learning objectives is periodically evaluated. Initial and continuing training programs are established to ensure personnel are qualified to perform job requirements.

Training methods and qualification requirements for identified functions are summarized below:

- **Conduct of Normal, Abnormal, and Emergency Operations**: Training methods and qualifications for normal and abnormal operations are described in the TIM, and on-shift and classroom training is described below. Training and qualifications for emergency operations are summarized below and described in detail in Chapter 15.0.
- **On-shift and Classroom Training**: On-shift qualification training for equipment/systems occurs in the form of instructed OJT, which may be performed in work, lab, or classroom environments. OJT is performed following established training programs to maintain instructional uniformity. The method of conducting OJT; performance evaluations during the qualification process; and responsibilities of the manager, instructor, and trainee are identified in WP 14-TR3308. The qualification program is described in WP 14-TR3307. On-shift training is described in the WP 04-CO.01-5 procedure.
- **Criticality Safety Training**: Personnel with responsibilities that may affect Nuclear Criticality Safety (NCS), for example Waste Handling personnel and their supervisors or individuals who generate and review NCS evaluations, are trained appropriate to their assigned functions. Chapter 6.0 discusses the criticality program and associated training in further detail.
- **General Employee Training**: Annual GET is required for all employees, subcontractors, and visitors who have unescorted facility access. Any changes made to GET are included in continuing training programs for all facility personnel. The following areas are included in GET:
  - General description of facilities.
  - Policies and procedures.
  - Radiological Health and Safety Programs.
  - Hazard communication.
  - Industrial Safety and Hygiene (IS&H) Program.
  - Fire Protection Program (FPP).
  - Security Program.
  - Conduct of operations.
- **Radiological Protection Training**: Radiological protection training is included in GET and addresses the employee’s responsibilities for keeping exposures to radiation and radioactive

materials ALARA. If a person requires unescorted access in a radiological area, additional radiological safety training is required. Radiation Worker Training I and II and respiratory protection training are required for personnel whose jobs require unescorted access within radiological posted areas. Chapter 7.0 discusses the Radiation Protection Program in further detail.

- **Radiological Control Technician Training**: Training program content for Radiological Control Technicians (RCTs) is in accordance with the requirements of "Occupational Radiation Protection" (10 CFR 835). Training program elements are in accordance with the requirements of DOE Order 426.2, and implemented in WP 14-TR.01 and the TIM. Training is provided for personnel who are assigned to work in Waste Handling areas. Training is commensurate with the hazard level and complexity of job duties performed in a Waste Handling area. Chapter 7.0 discusses radiological worker training in further detail.
- **Hazardous Material Training**: Training is provided for workers, supervisors, and managers who are assigned to work with hazardous materials (HAZMAT). Training includes environmental, worker safety, and health subject areas commensurate with their job assignments, as identified in work control documents. Chapter 8.0 discusses the program for HAZMAT protection in further detail. Employees handling hazardous or universal waste are required to complete and maintain hazardous waste worker training as described in Chapter 9.0.
- **Surveillance Testing and Maintenance Training**: Training is provided for operations and maintenance personnel involved in surveillance testing. The WIPP procedures address maintenance activities such as training of maintenance personnel, maintenance of SSCs, post-maintenance testing, and control and calibration of measuring equipment. Chapter 10.0 discusses the Surveillance Testing and Maintenance Training Program in further detail.
- **Fire Protection Program**: Fire protection training is governed by the WIPP FPP and is included in initial GET. Employees who perform fire watches, personnel conducting combustible control inspections, or serve as firefighters receive additional training. Chapter 11.0 discusses the FPP in further detail. Employees are expected to evaluate and respond to incipient fires only with portable fire extinguishers if they have trained to use the extinguishers and feel safe in doing so. Employees receive training on the different classes of fires and their ignition sources, fire extinguishers, and fire prevention as part of GET and miner training. Employees are not expected to fight fires past the incipient stage. The site has live-fire-trained workers to perform fire watches and response teams to deal with fire emergencies and perform fire watches. Vehicle Attendants are trained and qualified to perform their notification and vehicle spotting duties.
- **Quality Assurance Training**: Quality Assurance (QA) training is included in initial GET. Chapter 14.0 discusses the Quality Assurance Program in further detail.
- **Emergency Preparedness Training**: Basic training is provided to all permanently assigned personnel, including other DOE contractors and subcontractors, through GET and periodic refresher training with respect to the actions they should take during an emergency event. Chapter 15.0 discusses emergency preparedness in further detail.
- **Underground Access Training**: Training is provided to all personnel requiring entry to the Underground (UG). Personnel receive training on self-rescuer donning and use, self-contained self-rescuer donning and use, evacuation expectations, and access and egress routes.

12.4.2 Maintenance of Training

WP 14-TR.01 and WP 14-TR3309 implement the requirement for the periodic review of training programs. Program reviews are a shared effort between Technical Training and the functional groups. These reviews are used to update training programs to reflect changes to the facility, procedures, regulations, DSA, and TSRs. The reviews incorporate applicable industry operating experience in accordance with site controlled procedures.

Training records are considered quality records and are maintained as described in WP 14-TR.01. Details of the NWP Records Management Program are described in Chapter 14.0.

12.4.3 Modification of Training Materials

DOE-STD-1070-94, *Guidelines for Evaluation of Nuclear Facility Training Programs* requires a periodic comprehensive evaluation of individual training programs and materials by qualified individuals. Using the combined efforts of the WIPP training instructors and cognizant personnel, programs and materials are evaluated, revised, and updated in accordance with WP 14-TR.01. Line managers' responsibilities include review and update of qualification and training programs to reflect changes to the facility, procedures, regulations, and applicable industry operating experience as described in WP 14-TR.01.

Technical and human factor deficiencies in training may also be identified as follows:

- During work performance from operator or maintenance personnel input.
- During training evaluations performed per WP 14-TR3309.
- During review of training problems by the Administrative Review Board per WP 14-TR3301.
- During assessments.
- As a result of lessons learned as described in WP 15-PA.01.

Improvements or deficiencies are identified and tracked systematically until incorporated into the training programs.

12.5 REFERENCES

10 CFR 830, Subpart A, "Quality Assurance Requirements," *Code of Federal Regulations*. U.S. Government Printing Office, Washington, DC.

10 CFR 835, "Occupational Radiation Protection," *Code of Federal Regulations*. U.S. Government Printing Office, Washington, DC.

10 CFR 851, "Worker Safety and Health Program," Section 851.23, "Safety and Health Standards," *Code of Federal Regulations*. U.S. Government Printing Office, Washington, DC.

30 CFR 47, "Hazard Communication," *Code of Federal Regulations*. U.S. Government Printing Office, Washington, DC.

30 CFR 48, "Training and Retraining of Miners," *Code of Federal Regulations*. U.S. Government Printing Office, Washington, DC.

30 CFR 49, "Mine Rescue Teams," *Code of Federal Regulations*. U.S. Government Printing Office, Washington, DC.

30 CFR 57, "Safety and Health Standards – Underground Metal and Nonmetal Mines," *Code of Federal Regulations*. U.S. Government Printing Office, Washington, DC.

30 CFR 58, "Health Standards for Metal and Nonmetal Mines," *Code of Federal Regulations.* U.S. Government Printing Office, Washington, DC.

30 CFR 62, "Occupational Noise Exposure," *Mine Safety and Health Administration*. U.S. Government Printing Office, Washington, DC.

40 CFR 260, "Hazardous Waste Management System: General." *Code of Federal Regulations*. U.S. Government Printing Office, Washington, DC.

40 CFR 261, "Identification and Listing of Hazardous Waste." *Code of Federal Regulations*. U.S. Government Printing Office, Washington, DC.

40 CFR 262, "Standards Applicable to Generators of Hazardous Waste," *Code of Federal Regulations*. U.S. Government Printing Office, Washington, DC.

40 CFR 263, "Standards Applicable to Transporters of Hazardous Waste." *Code of Federal Regulations*. U.S. Government Printing Office, Washington, DC.

40 CFR 264, "Standards for Owners and Operators of Hazardous Waste Treatment, Storage, and Disposal Facilities." *Code of Federal Regulations*. U.S. Government Printing Office, Washington, DC.

40 CFR 265, "Interim Status Standards for Owners and Operators of Hazardous Waste Treatment, Storage, and Disposal Facilities." *Code of Federal Regulations*. U.S. Government Printing Office, Washington, DC.

40 CFR 266, "Standards for the Management of Specific Hazardous Waste and Specific Types of Hazardous Waste Management Facilities." *Code of Federal Regulations*. U.S. Government Printing Office, Washington, DC.

40 CFR 267, "Standards for Owners and Operators of Hazardous Waste Facilities Operating under a Standardized Permit." *Code of Federal Regulations*. U.S. Government Printing Office, Washington, DC.

40 CFR 268, "Land Disposal Restrictions." *Code of Federal Regulations*. U.S. Government Printing Office, Washington, DC.

40 CFR 270, "EPA Administered Permit Programs: The Hazardous Waste Permit Program." *Code of Federal Regulations.* U.S. Government Printing Office, Washington, DC.

42 USC 6901, et seq., *Resource Conservation and Recovery Act of 1976*.

DOE Order 151.1C, *Comprehensive Emergency Management System*, November 2, 2005, U.S. Department of Energy, Washington, DC.

DOE Order 210.2A, *DOE Corporate Operating Experience Program*, April 8, 2011, U.S. Department of Energy, Washington, DC.

DOE Order 414.1D, *Quality Assurance*, April 25, 2011, Administrative Change 1, May 8, 2013, U.S. Department of Energy, Washington, DC.

DOE Order 420.1C, *Facility Safety*, December 13, 2012, U.S. Department of Energy, Washington, DC.

DOE Order 422.1, *Conduct of Operations*, June 29, 2010, U.S. Department of Energy, Washington, DC.

DOE Order 426.2, *Personnel Selection, Training, Qualification, and Certification Requirements for DOE Nuclear Facilities*, April 21, 2010, U.S. Department of Energy, Washington, DC.

DOE Order 435.1, Change 1, *Radioactive Waste Management*, January 9, 2007, U.S. Department of Energy, Washington, DC.

DOE Order 440.1B, *Worker Protection Program for DOE (Including the National Nuclear Security Administration) Federal Employees*, May 17, 2007, U. S. Department of Energy, Washington, DC.

DOE Order 450.2, 2011, *Integrated Safety Management*, April 25, 2011, U.S. Department of Energy, Washington, DC.

DOE Order 460.1C, 2010, *Packaging and Transportation Safety*, May 14, 2010, U.S. Department of Energy, Washington, DC.

DOE-STD-1070-94, *Criteria for Evaluation of Nuclear Facility Training Programs*, June 2013, Replaced by Reaffirmation on June 2014, U.S. Department of Energy, Washington, DC.

DOE-STD-3009-94, CN3. *Preparation Guide for U.S. Department of Energy Nonreactor Nuclear Facility Documented Safety Analysis*, March 2006, U.S. Department of Energy, Washington, DC.

DOE STD 3009-2014, *Preparation of Nonreactor Nuclear Facility Documented Safety Analysis*, November 2014, U.S. Department of Energy, Washington, DC.

HWFP, *Waste Isolation Pilot Plant Hazardous Waste Facility Permit*, NM4890139088-TSDF (current revision), New Mexico Environment Department, Santa Fe, NM.

TIM, *Waste Isolation Pilot Plant Training Implementation Matrix* (current revision), Technical Training Department, Nuclear Waste Partnership LLC, Carlsbad, NM.

WP 04-CO.01, *Conduct of Operations* (current revision), Nuclear Waste Partnership LLC, Carlsbad, NM.

WP 13-1, *Nuclear Waste Partnership LLC Quality Assurance Program Description* (current revision), Nuclear Waste Partnership LLC, Carlsbad, NM.

WP 14-TR.01, *WIPP Training Program* (current revision), Nuclear Waste Partnership LLC, Carlsbad, NM.

WP 14-TR3004, *Training Development*, Management Control Procedure (current revision), Nuclear Waste Partnership LLC, Carlsbad, NM.

WP 14-TR3301, *Administrative Review Board*, Management Control Procedure (current revision), Nuclear Waste Partnership LLC, Carlsbad, NM.

WP 14-TR3307, *Qualification Programs*, Management Control Procedure (current revision), Nuclear Waste Partnership LLC, Carlsbad, NM.

WP 14-TR3308, *On-the-Job Training*, Management Control Procedure (current revision), Nuclear Waste Partnership LLC, Carlsbad, NM.

WP 14-TR3309, *Training Evaluation*, Management Control Procedure (current revision), Nuclear Waste Partnership LLC, Carlsbad, NM.

WP 14-TR3311, *Vendor Training*, Management Control Procedure (current revision), Nuclear Waste Partnership LLC, Carlsbad, NM.

WP 14-TR3312, *Exceptions/Equivalencies and Extensions*, Management Control Procedure (current revision), Nuclear Waste Partnership LLC, Carlsbad, NM.

WP 15-GM.03, *Integrated Safety Management System Description* (current revision), Nuclear Waste Partnership LLC, Carlsbad, NM.

WP 15-PA.01, *Operating Experience/Lessons Learned Program*, Management Control Procedure (current revision), Nuclear Waste Partnership LLC, Carlsbad, NM.

WP 15-PS.01, *Procedures Program* (current revision), Nuclear Waste Partnership LLC, Carlsbad, NM.

WP 15-PS.2, *Procedure Writer's Guide* (current revision), Nuclear Waste Partnership LLC, Carlsbad, NM.

WP 15-PS3002, *Controlled Document Processing* (current revision), Nuclear Waste Partnership LLC, Carlsbad, NM.

WP 15-PS3004, *Procedure Verification and Validation* (current revision), Nuclear Waste Partnership LLC, Carlsbad, NM.

WP 15-PS3103, *Document Distribution* (current revision), Nuclear Waste Partnership LLC, Carlsbad, NM.

Table of Contents

13.0 HUMAN FACTORS – DELETED 13-1

This page intentionally left blank

13.0 HUMAN FACTORS – DELETED

This page intentionally left blank

Table of Contents

14.0 QUALITY ASSURANCE 14-1
14.1 Introduction 14-1
14.2 Requirements 14-2
14.3 Quality Assurance Program and Organization 14-3
14.4 Quality Improvement 14-4
14.5 Documents and Records 14-5
14.6 Quality Assurance Performance 14-6
14.6.1 Work Processes 14-6
14.6.2 Design 14-7
14.6.3 Procurement 14-8
14.6.4 Inspection and Testing for Acceptance 14-8
14.6.5 Independent Assessment 14-9
14.7 References 14-10

List of Tables

Table 14.3-1. Program References 14-4

This page intentionally left blank

14.0 QUALITY ASSURANCE

14.1 INTRODUCTION

This chapter summarizes the Nuclear Waste Partnership LLC (NWP) Quality Assurance (QA) Program as it relates to facility safety at the Waste Isolation Pilot Plant (WIPP) per U.S. Department of Energy (DOE) Standard DOE-STD-3009-2014, *Preparation of Nonreactor Nuclear Facility Documented Safety Analysis*. The format of this chapter was left as described in DOE-STD-3009-94, CN3, for Revision 5 of the Documented Safety Analysis (DSA), as allowed by DOE-STD-3009-2014. The Safety Management Program (SMP) Chapters (7.0–18.0) will be reformatted as a consolidated Chapter 7.0 for Revision 6 of the DSA. The principal features described in this chapter include the following:

- QA Program and organization.
- Quality improvement.
- Document control and records management.
- The QA process used to ensure the performed safety-related work meets requirements.

NWP applies a graded approach for the application of QA requirements to WIPP items and activities in accordance with the following guidance:

- *Code of Federal Regulations*, Title 10, Part 830 (10 CFR 830), "Nuclear Safety Management," Subpart A, "Quality Assurance Requirements."
- DOE Order 414.1D, *Quality Assurance.*
- DOE/CBFO 94-1012, *U.S. Department of Energy Carlsbad Field Office Quality Assurance Program Document.*

The graded-approach process determines the level of quality-related controls appropriate for each item or activity. The NWP graded-approach process is implemented in *Graded Approach to Application of QA Controls* (WP 09-CN3005).

Facility nuclear safety is assured, in part, through implementation of a QA Program based on 10 CFR 830, Subpart A, requirements and other pertinent regulations, standards, and DOE Orders (cited in Section 14.2) and graded application of quality control to items and services provided by NWP and its suppliers. In accordance with the graded approach, the highest level of quality controls is applied to nuclear safety–related items and services. The NWP QA Department independently verifies quality by measures such as procurement reviews, supplier qualification, assessments, and inspections.

The key element (KE) of the WIPP QA Program is as follows:

- **KE 14-1**: Password protection of Safety Significant (SS) Programmable Logic Controllers.

For safety analysis purposes, the key attributes (KAs) of the WIPP QA Program described in this chapter are as follows:

- KA 14-1: NWP implements a QA Program meeting the requirements of 10 CFR 830, "Nuclear Safety Management," Subpart A.
- KA 14-2: Processes to detect and prevent quality problems are implemented.

- KA 14-3: Document control and records management processes are established that ensure documents and records are accurate and complete, and in a form that can be controlled, protected, retained, and retrieved for the required duration.
- KA 14-4: Procurements and acquisitions are planned, documented, and executed, and prospective suppliers are evaluated. Processes are in place to prevent procurement of suspect counterfeit items. Supplier performance is monitored during the life of their subcontract to ensure they continue to satisfy the requirements of 10 CFR 830.122, "Quality Assurance Criteria."
- KA 14-5: Instruments and equipment used for verifying conformance to requirements, monitoring processes, or collecting data are controlled, calibrated at specified intervals, and maintained to required accuracy limits.
- KA 14-6: Computer software used in applications important to safety, health, environmental, and quality aspects of work is subject to appropriate controls, including configuration management, throughout the software life cycle.
- KA 14-7: Managers at all levels plan, schedule, and conduct assessments of their management systems and processes important to achieving objectives.
- KA 14-8: Independent assessments are performed to measure the adequacy of work performed in complying with applicable requirements, and independent assessments are performed that evaluate the quality of the NWP items and services and that promote improvement.
- KA 14-9: QA audits are performed that include verification of QA Program compliance.

14.2 REQUIREMENTS

The regulations, standards, and DOE Orders that are required to form the basis for the NWP QA Program include the following:

- 10 CFR 830, "Nuclear Safety Management," Subpart A, "Quality Assurance Requirements."
- 40 CFR 194, "Criteria for the Certification and Re-certification of the Waste Isolation Pilot Plant's Compliance with the 40 CFR Part 191 Disposal Regulations," Section 194.22, "Quality Assurance."
- DOE Order 414.1D, *Quality Assurance.*
- DOE/CBFO 94-1012, *U.S. Department of Energy Carlsbad Field Office Quality Assurance Program Document.*
- EM-QA-001, *EM Quality Assurance Program (QAP).*
- ASME NQA-1, 1989, *Quality Assurance Program Requirements for Nuclear Facilities.*
- ASME NQA-2a, 1990, *Quality Assurance Requirements of Computer Software for Nuclear Facility Applications.*
- ASME NQA-3, 1989, *Quality Assurance Program Requirements for the Collection of Scientific and Technical Information on Site Characterization of High-level Nuclear Waste Repositories* (excluding Section 2.1 (b) and (c), and Section 17.1) (incorporation by reference as specified in 40 CFR 194.5, "Publications Incorporated by Reference").

14.3 QUALITY ASSURANCE PROGRAM AND ORGANIZATION

The NWP QA Program is defined in *Nuclear Waste Partnership LLC Quality Assurance Program Description* (NWP QAPD) (WP 13-1), and implemented in NWP procedures. The NWP QA Program Policy Statement is included in WP 13-1 and identifies the NWP commitment to performing work activities in a manner to minimize risk and environmental impacts and to maximize safety, reliability, and performance. The policy identifies the NWP personnel responsibilities relative to quality. The NWP QAPD and other site management systems form the basis for the *Integrated Safety Management System Description* (ISMS) (DOE/CBFO 09-3442 and WP 15-GM.03). The ISMS provides a formal, organized process to plan, perform, assess, and improve the safe conduct of work.

The NWP QAPD provides for efficient conduct of work that ensures protection of workers, the public, and the environment, taking into account the work to be performed and the associated hazards. The NWP QAPD requires that work be planned, documented, performed under controlled conditions, and periodically assessed to establish work item quality and process effectiveness and to promote improvement. Problems are identified, graded by importance, tracked, corrected, and evaluated for trends so that recurrence is avoided and performance may be improved. Continuous improvement is achieved through the use of tools such as management assessments, independent assessments, and issues management.

Effective implementation of the NWP QA Program is dependent on the efforts of all levels of the NWP organization. The NWP President and Project Manager has overall responsibility and authority for the development and implementation of the QA Program. The NWP QA Manager reports to the NWP President and Project Manager and is delegated responsibility for establishing the overall NWP QA Program and ensuring effective QA Program implementation. Department managers representing the primary functional organizations report directly to the President and Project Manager. Department managers are responsible for implementing the NWP QAPD and have specific QA responsibilities delineated in the NWP QAPD. Line managers are responsible for achieving quality in their area. Employees are responsible for achieving and maintaining quality in their work, and for promptly reporting to management any condition adverse to quality.

The NWP organization structure and staffing are discussed in Chapter 17.0, “Management, Organization, and Institutional Safety Provisions.”

Qualification requirements for personnel performing quality-related work are established and documented in the NWP Training Program. The *Quality Assurance Department Administrative Program* (WP 13-QA.04) defines training and indoctrination requirements for all NWP QA personnel. Inspection and test, nondestructive examination, and assessment personnel are qualified in accordance with the NWP QAPD (WP 13-1), WP 13-QA.04, and the *WIPP Training Program* (WP 14-TR.01), to meet the requirements of the American Society of Mechanical Engineers (ASME) NQA-1 (1989) and supplements. The WIPP Training Program is described in Chapter 12.0, “Procedures and Training.”

Program documents referenced in this chapter are summarized in Table 14.3-1.

Table 14.3-1. Program References

Document Number	Title
DOE/CBFO 09-3442	*CBFO Integrated Safety Management System Description*
WP 04-CO.01	*Conduct of Operations* (procedure series)
WP 15-GM1002	*Issues Management Processing of WIPP Forms*
WP-09	*Conduct of Engineering*
WP 09-CN.04	*Backfit Analysis Process*
WP 09-CN3005	*Graded Approach to Application of QA Controls*
WP 09-CN3018	*Design Verification*
WP 09-CN3021	*Component Indices*
WP 09-SU.01	*WIPP Start-Up Test Program*
WP 10-WC3011	*Work Control Process*
WP 10-AD.01	*Metrology Program*
WP 13-1	*Nuclear Waste Partnership LLC Quality Assurance Program Description*
WP 13-QA.03	*Quality Assurance Independent Assessment Program*
WP 13-QA.04	*Quality Assurance Department Administrative Program*
WP 13-QA.05	*Suspect/Counterfeit Items Program*
WP 13-QA3004	*Nonconformance Report*
WP 13-QA3012	*Supplier Evaluation/Qualification*
WP 14-TR.01	*WIPP Training Program*
WP 15-GM.03	*Integrated Safety Management System Description*
WP 15-CA1002	*Self-Assessment*
WP 15-PC3609	*Preparation of Purchase Requisitions*
WP 15-PM3517	*Stores Inventory Control*
WP 15-RM	*WIPP Records Management Program*
WP 15-RM3002	*Records Filing, Inventorying, Scheduling, and Dispositioning*
WP 15-PS3002	*Controlled Document Processing*
WP 16-2	*Software Screening and Control*

14.4 QUALITY IMPROVEMENT

Quality improvement is a comprehensive management process carried out to improve items, services, products, or processes. This section focuses on the correction processes used for identified conditions adverse to quality. Correction of adverse conditions affecting quality includes identifying the causes of adverse conditions and working to prevent recurrence. All personnel are responsible for identifying adverse conditions affecting quality and are encouraged by management to suggest improvements. Quality problems may involve nonconforming items, conditions adverse to quality, and significant conditions adverse to quality.

Control of nonconforming items (i.e., items and materials that do not conform to specified requirements or whose conformance is indeterminate) is implemented in accordance with *Nonconformance Report* (WP 13-QA3004). Nonconforming items are documented on nonconformance reports; controlled to prevent inadvertent use; identified by marking, tagging, or other appropriate means; and segregated or controlled administratively. The nonconforming characteristics are reviewed, and recommended dispositions are proposed and approved. Implementation of the disposition is verified by the QA Department before the nonconformance report is closed.

Control of conditions adverse to quality (i.e., programmatic and/or process failures, malfunctions, deficiencies, and nonconformances) is implemented in accordance with *Issues Management Processing of WIPP Forms* (WP 15-GM1002). Conditions adverse to quality are documented on WIPP forms. Responsible management investigates conditions adverse to quality, determines the extent and impact of the condition, and determines the corrective action response.

If a condition adverse to quality is determined to be potentially significant, as defined in WP 15-GM1002, the condition is submitted to and evaluated by the QA Department, relevant regulatory compliance functions, and the appropriate management responsible for the condition, to determine whether a work suspension order is necessary. If necessary, work is suspended until the condition is corrected and verified by the QA Department. The QA Department verifies implementation of corrective actions for significant conditions adverse to quality.

14.5 DOCUMENTS AND RECORDS

Document review, approval, issuance, and control requirements, and records management requirements are delineated in the NWP QAPD (WP 13-1). Documents that prescribe processes, specify requirements, or establish design are prepared, approved, issued, and controlled in accordance with approved procedures. Documents are reviewed for adequacy, correctness, and completeness by designated technically competent reviewers prior to approval and issuance as controlled documents. Document changes are indicated by a change history summary in the revised document and reviewed by the organizations or technical disciplines affected. Editorial or minor changes may be made without the same level of review and approval as the original or otherwise changed document.

The distribution and use of documents and forms is controlled. Procedures are developed and controlled as described in Chapter 12.0, “Procedures and Training.” Documents used to perform work are distributed to affected personnel for use at the work location. Effective dates are established for and placed on approved documents. Controls are established and maintained to identify the current status/revision of documents and forms. Obsolete or superseded documents and forms are controlled to avoid their inadvertent use. *Controlled Document Processing* (WP 15-PS3002) and associated procedures ensure that documents are reviewed for adequacy, approved for release by authorized personnel, and distributed for use at the locations where required.

The NWP records management program is implemented through *WIPP Records Management Program* (WP 15-RM). Records are specified, prepared, reviewed, approved, controlled, and maintained to accurately reflect completed work and facility conditions and to comply with statutory or contractual requirements. *Records Filing, Inventorying, Scheduling, and Dispositioning* (WP 15-RM3002) and associated procedures ensure that records are reviewed for completeness and dispositioned.

QA records are completed documents (regardless of medium) that furnish evidence of the quality of items and/or activities. Such records are designated as QA records in the Records Inventory and Disposition Schedule (RIDS), when applicable, as described in WP 15-RM. QA records are provided reasonable

protection from damage until completed, authenticated, and submitted to the records management system. Requirements and responsibilities for QA record transmittal, distribution, receipt, indexing, retention, maintenance, storage, disposition, and retrievability are established in WP 15-RM. Disposition requirements for individual records are documented in the RIDS. The records storage arrangements provide adequate protection of records to preclude damage as deemed appropriate for the type of record being stored.

Records of hazard inventory information, hazard assessments, exposure measurements, and exposure controls are maintained to meet the requirements of 10 CFR 851.26, "Recordkeeping and Reporting," in accordance with the programs described in Chapters 6.0 through 12.0 of this DSA, and according to records management requirements in WP 13-1.

14.6 QUALITY ASSURANCE PERFORMANCE

This section presents an overview of processes to ensure that the performed work meets requirements.

14.6.1 Work Processes

The NWP QAPD (WP 13-1) delineates requirements for work process controls that provide for the efficient conduct of work and performance of tasks under controlled conditions. Work is performed to established, approved, and documented technical standards and Administrative Controls (ACs), and under controlled conditions using approved instructions, procedures, drawings, or other appropriate means. Work process documents provide a level of detail appropriate for the complexity of the specific task, the work environment and worker proficiency. Work process documents are readily accessible to the worker. Performance of work is implemented through the *Work Control Process* (WP 10-WC3011) and *Conduct of Operations* (WP 04-CO.01) procedures as described in Chapter 11.0, "Operational Safety." Specific requirements that affect the performance of work by organizations are incorporated into each organization's procedures.

Engineering systems (e.g., Underground Ventilation Filtration System, Liquid Fueled Vehicle/Equipment Fire Suppression Systems, Programmable Logic Controllers) that may be reclassified will be evaluated to determine if the existing Structure, System or Component (SSC) can reasonably be expected to perform its proposed new safety function(s). Performance of this scope of work will be implemented through the *Backfit Analysis Process* (WP 09-CN.04).

Additional compensatory controls will be implemented for systems upgraded through the Backfit Analysis Process or new systems identified through the graded approach to be Safety Significant containing software, such as Programmable Logic Controllers. These controls will ensure that: (1) entry into the software shall be password protected to prevent access except under approved work packages and by authorized personnel; (2) configuration changes to the software cannot be made except under approved work packages and by authorized personnel; (3) the software cannot be taken out of service without entry into appropriate Limiting Conditions for Operation (LCO); (4) the software undergoes appropriate regression testing prior to return to service to verify performance has been restored; (5) the software provides the correct indication of the credited function.

Work processes are performed by qualified personnel who have been trained as described in Chapter 12.0 and have the resources and ACs to accomplish assigned tasks. Criteria for the successful performance of work are defined for the worker and periodically reviewed by line managers to ensure that the desired quality is being achieved and to identify areas needing improvement.

Individuals perform work in accordance with controlled procedures developed and maintained as described in Chapter 12.0. When work cannot be accomplished as described in the implementing procedure or accomplishment of such work would result in an undesirable situation, a condition adverse to quality, or an unacceptable safety risk, the work is suspended in accordance with *Stop Work Policy* (MP 1.2) and the procedure changed in accordance with the approved procedure change process.

Items are identified and controlled to ensure their proper use and maintained to prevent their damage, loss, or deterioration. *Component Indices* (WP 09-CN3021) and *Stores Inventory Control* (WP 15-PM3517) implement requirements for item identification and control. Suspect/counterfeit items are controlled in accordance with *Suspect/Counterfeit Items Program* (WP 13-QA.05).

Special processes (i.e., processes dependent on the control of the process, where the results are highly dependent on the skill of the operator, or where quality of the results cannot be readily determined by inspection or test of the product) are controlled through implementing procedures established to ensure special process parameters are controlled and specified environmental conditions are maintained. Special process implementing procedures include or reference the conditions (e.g., personnel qualifications, equipment, and calibration requirements) relevant to the process as specified in the NWP QAPD (WP 13-1).

Handling, storage, and shipping is conducted in accordance with established work and inspection implementing procedures, shipping instructions, or other specified documents. Items are marked or labeled as necessary to adequately identify, maintain, and preserve them. Special environments or controls are indicated as necessary. Handling, storage, and shipping requirements are implemented in WP 15-PM3517 and WIPP shipping procedures for various organizations.

Status indicators, such as tags on valves and switches to prevent inadvertent operation, are used to indicate operating status of items as described in *Conduct of Operations Program – Control of Equipment and System Status* (WP 04-CO.01-8) and *Conduct of Operations Program – Lockout/Tagout* (WP 04-CO.01-9) procedures and summarized in Chapter 11.0.

14.6.2 Design

Quality requirements for design control are delineated in the NWP QAPD and implemented in *Conduct of Engineering* (WP-09). Using a graded approach, the NWP QAPD requires that the design input be identified, documented, and approved before use at a level of detail adequate to support design decisions. Designs incorporate applicable requirements and design basis into design documents. The codes and standards applied to the design are based on the functional classification of the item being designed, as discussed in Chapter 2.0 of this DSA. New designs or modifications to existing designs are verified to an extent commensurate with the design's complexity and importance to safety, the environment, the degree of standardization, the state of the art, and similarity with previously approved designs. Design verification is performed using one or a combination of the following methods: design review, alternate calculations, or qualification testing as described in *Design Verification* (WP 09-CN3018). Computer software used to perform design analyses is developed, qualified, and used in accordance with software requirements in the QAPD as described in *Software Screening and Control* (WP 16-2). Changes to the design input and design are identified, documented, and approved.

14.6.3 Procurement

Quality requirements for procurement are delineated in the NWP QAPD (WP 13-1). Procurement planning, documentation, selection of suppliers, evaluation of supplier performance, and acceptance of purchased items and services are the elements of procurement control implemented at WIPP.

Procurement planning and document requirements are detailed in *Preparation of Purchase Requisitions* (WP 15-PC3609) and *Supplier Evaluation/Qualification* (WP 13-QA3012). Procurement of items and services is planned and controlled to ensure that technical and QA requirements are accurate, complete, and clearly understood by suppliers. Procurement documents define the scope of work and requirements applicable to the item or service being procured. Procurement documents are prepared by trained personnel as specified in WP 15-PC3609 and are reviewed prior to issuance to verify that the documents include appropriate provisions to ensure that items or services meet the prescribed requirements. Procurement document reviews include representatives from affected technical organizations as well as the QA Department for items and services subject to the QA Program.

The QA Department is responsible for performing supplier evaluations for quality-related items and services in accordance with WP 13-QA3012. Supplier selection is based on an evaluation of the supplier's capability to provide items or services in accordance with procurement document requirements. The evaluation is based on the supplier's history, documentation, or an onsite evaluation of the supplier's facilities, personnel, and QA Program implementation including a pass down of QA requirements in the event the supplier subcontracts a portion of the contract to another supplier. Suppliers are evaluated and accepted by the QA Department before starting work. Approved suppliers are evaluated periodically to verify that they continue to provide acceptable items and services.

14.6.4 Inspection and Testing for Acceptance

Quality requirements for inspection and testing are delineated in the NWP QAPD (WP 13-1). Using a graded approach, inspections and tests are planned and performed in accordance with approved implementing procedures, using established performance and acceptance criteria based on specified requirements. Items and processes are inspected to verify quality, including source, receipt, in-process, final, and in service inspections. Tests are controlled, planned, performed, and documented. The initial test program, including startup tests, post-modification tests, and retests; the In Service Surveillance program; and the maintenance program, are summarized in Chapter 10.0, "Initial Testing, In Service Surveillance, and Maintenance."

The status of inspections and tests is identified either on the items or in documents traceable to the items to ensure that required inspections and tests are performed, and that items that have not passed the required inspections and tests are not inadvertently installed, used, or operated. Nonconforming items and conditions adverse to quality found during inspections and tests are controlled in accordance with NWP nonconformance and issues management procedures.

Personnel who perform inspections or tests to verify conformance of items to specified acceptance criteria are qualified in accordance with approved procedures to meet qualification requirements established in the NWP QAPD (WP 13-1). Qualification requirements are implemented in WP 13-QA.04 and the *WIPP Start-Up Test Program* (WP 09-SU.01).

Measuring and test equipment that is used to verify conformance with requirements, monitoring processes, or collecting data is controlled, calibrated at specified intervals, and maintained to required

accuracy limits. Calibration requirements are implemented in *Metrology Program* (WP 10-AD.01) and WIPP maintenance procedures.

14.6.5 Independent Assessment

Planned and periodic assessments are conducted to measure management effectiveness, item, service quality, and process effectiveness to promote improvement. NWP independently assesses SMPs, KEs, and KAs for each, to verify their adequacy and effectiveness. Results of these assessments are used as inputs to the annual SMP Health Assessment in accordance with *Performance Monitoring and Reporting* (WP 15-CA1004).

- **Independent Assessments**: Independent assessment requirements are delineated in the NWP QAPD and are implemented in *Quality Assurance Independent Assessment Program* (WP 13-QA.03). Independent assessments may be performed as audits or surveillances. Audits are generally larger, more formal assessments of QA Program elements or supplier programs. Surveillances are generally smaller assessments of specific activities.

  Planned and periodic assessments are conducted to evaluate the adequacy of program documents and implementation, including effectiveness of established programs, and processes for compliance with the NWP QAPD, other QA Program documents, and purchase order requirements, as applicable. Assessments focus on improving items, services, and processes by emphasizing the achievement of quality by line organizations. Independent assessments are performed by a group or organization with sufficient authority and freedom from the line organization being assessed to carry out its responsibilities. Assessment team members are selected on the basis of technical qualification and knowledge of the item and/or process being assessed. When a formal QA audit is performed, the assessment team leader is a lead auditor. Lead auditors are qualified in accordance with WP 13-QA.04 and WP 14-TR.01 to meet qualification requirements in the NWP QAPD.

  Assessment results are documented and reported to responsible management. Conditions adverse to quality are controlled in accordance with NWP assessment and nonconformance procedures as described in Section 14.4.

- **Management Assessments**: NWP uses the management assessment process delineated in the NWP QAPD (WP 13-1) and implemented in accordance with *Self-Assessment* (WP 15-CA1002) to evaluate the adequacy and effectiveness of its management control systems. While retaining overall responsibility for the assessment process, senior management requires managers at all levels to assess the performance of the activities assigned to their organization. This is accomplished through a formal management assessment process.

  Management assessments include strategic planning, scheduled assessments, reviews, and actual work processes. Such assessments are planned and performed as an ongoing activity to verify conformance to applicable requirements and identify opportunities to improve performance and cost effectiveness. Results and conclusions from these assessments are documented and evaluated. Corrective actions are taken to resolve identified problems and to achieve continuous improvement. Provisions are included to track and follow up on planned corrective actions from the assessments.

14.7 REFERENCES

10 CFR 830, "Nuclear Safety Management," Subpart A, "Quality Assurance Requirements," *Code of Federal Regulations*. U.S. Government Printing Office, Washington, DC.

10 CFR 830, "Nuclear Safety Management," Section 830.122, "Quality Assurance Criteria," *Code of Federal Regulations*. U.S. Government Printing Office, Washington, DC.

10 CFR 851, "Worker Safety and Health Program," Section 851.26, "Recordkeeping and Reporting," *Code of Federal Regulations*. U.S. Government Printing Office, Washington, DC.

40 CFR 194, "Criteria for the Certification and Re-certification of the Waste Isolation Pilot Plant's compliance with the 40 CFR Part 191 Disposal Regulations," Section 194.5, "Publications Incorporated by Reference," *Code of Federal Regulations*. U.S. Government Printing Office, Washington, DC.

40 CFR 194, "Criteria for the Certification and Re-certification of the Waste Isolation Pilot Plant's Compliance with the 40 CFR Part 191 Disposal Regulations," Section 194.22, "Quality Assurance," *Code of Federal Regulations*. U.S. Government Printing Office, Washington, DC.

ASME NQA-1, 1989, *Quality Assurance Program Requirements for Nuclear Facilities*, American Society of Mechanical Engineers, New York, NY.

ASME NQA-2a, 1990 Addenda, *Quality Assurance Requirements of Computer Software for Nuclear Facility Applications*, Part 2.7 to ASME NQA-2-1989 edition, American Society of Mechanical Engineers, New York, NY.

ASME NQA-3, 1989, *Quality Assurance Program Requirements for the Collection of Scientific and Technical Information for Site Characterization of High-level Nuclear Waste Repositories*, American Society of Mechanical Engineers, New York, NY.

DOE/CBFO 09-3442, *CBFO Integrated Safety Management System Description* (current revision), U.S. Department of Energy, Carlsbad Field Office, Carlsbad, NM.

DOE/CBFO 94-1012, *U.S. Department of Energy Carlsbad Field Office Quality Assurance Program Document* (current revision), U.S. Department of Energy, Carlsbad Field Office, Carlsbad, NM.

DOE Order 414.1D, *Quality Assurance*, April 25, 2011, Administrative Change 1, May 8, 2013, U.S. Department of Energy, Washington, DC.

DOE-STD-3009-94, CN3. *Preparation Guide for U.S. Department of Energy Nonreactor Nuclear Facility Documented Safety Analyses*, March 2006, U.S. Department of Energy, Washington, DC.

DOE-STD-3009-2014, *Preparation of Nonreactor Nuclear Facility Documented Safety Analysis*, November 2014, U.S. Department of Energy, Washington, DC.

EM-QA-001, *EM Quality Assurance Program (QAP)*, Nuclear Waste Partnership LLC, Carlsbad, NM.

MP 1.2, *Stop Work Policy* (current revision), Nuclear Waste Partnership LLC, Carlsbad, NM.

WP 04-CO.01, *Conduct of Operations* (series, current revisions), Nuclear Waste Partnership LLC, Carlsbad, NM.

WP 09, *Conduct of Engineering* (current revision), Nuclear Waste Partnership LLC, Carlsbad, NM.

WP 09-CN.04, *Backfit Analysis Process*, (current revision), Nuclear Waste Partnership LLC, Carlsbad, NM.

WP 09-CN3005, *Graded Approach to Application of QA Controls* (current revision), Management Control Procedure, Nuclear Waste Partnership LLC, Carlsbad, NM.

WP 09-CN3018, *Design Verification* (current revision), Management Control Procedure, Nuclear Waste Partnership LLC, Carlsbad, NM.

WP 09-CN3021, *Component Indices* (current revision), Management Control Procedure, Nuclear Waste Partnership LLC, Carlsbad, NM.

WP 09-SU.01, *WIPP Start-Up Test Program* (current revision), Nuclear Waste Partnership LLC, Carlsbad, NM.

WP 10-AD.01, *Metrology Program* (current revision), Nuclear Waste Partnership LLC, Carlsbad, NM.

WP 10-WC3011, *Work Control Process* (current revision), Nuclear Waste Partnership LLC, Carlsbad, NM.

WP 13-1, *Nuclear Waste Partnership LLC Quality Assurance Program Description* (current revision), Nuclear Waste Partnership LLC, Carlsbad, NM.

WP 13-QA.03, *Quality Assurance Independent Assessment Program*, (current revision), Nuclear Waste Partnership LLC, Carlsbad, NM.

WP 13-QA.04. *Quality Assurance Department Administrative Program* (current revision), Nuclear Waste Partnership LLC, Carlsbad, NM.

WP 13-QA.05, *Suspect/Counterfeit Items Program* (current revision), Nuclear Waste Partnership LLC, Carlsbad, NM.

WP 13-QA3004, *Nonconformance Report* (current revision), Management Control Procedure, Nuclear Waste Partnership LLC, Carlsbad, NM.

WP 13-QA3012, *Supplier Evaluation/Qualification* (current revision), Management Control Procedure, Nuclear Waste Partnership LLC, Carlsbad, NM.

WP 14-TR.01, *WIPP Training Program* (current revision), Nuclear Waste Partnership LLC, Carlsbad, NM.

WP 15-CA1002, *Self-Assessment* (current revision), Management Control Procedure, Nuclear Waste Partnership LLC, Carlsbad, NM.

WP 15-CA1004, *Performance Monitoring and Reporting* (current revision), Nuclear Waste Partnership LLC, Carlsbad, NM.

WP 15-GM.03, *Integrated Safety Management System Description* (current revision), Nuclear Waste Partnership LLC, Carlsbad, NM.

WP 15-GM1002, *Issues Management Processing of WIPP Forms* (current revision), Management Control Procedure, Nuclear Waste Partnership LLC, Carlsbad, NM.

WP 15-PC3609, *Preparation of Purchase Requisitions* (current revision), Management Control Procedure, Nuclear Waste Partnership LLC, Carlsbad, NM.

WP 15-PM3517, *Stores Inventory Control* (current revision), Management Control Procedure, Nuclear Waste Partnership LLC, Carlsbad, NM.

WP 15-PS3002, *Controlled Document Processing* (current revision), Management Control Procedure, Nuclear Waste Partnership LLC, Carlsbad, NM.

WP 15-RM, *WIPP Records Management Program* (current revision), Nuclear Waste Partnership LLC, Carlsbad, NM.

WP 15-RM3002, *Records Filing, Inventorying, Scheduling, and Dispositioning* (current revision), Management Control Procedure, Nuclear Waste Partnership LLC, Carlsbad, NM.

WP 16-2, *Software Screening and Control* (current revision), Management Control Procedure, Nuclear Waste Partnership LLC, Carlsbad, NM.

Table of Contents

15.0 EMERGENCY PREPAREDNESS PROGRAM 15-1
15.1 Introduction 15-1
15.2 Requirements 15-2
15.3 Scope of Emergency Preparedness 15-3
15.4 Emergency Preparedness Planning 15-4
15.4.1 Emergency Response Organization 15-4
15.4.1.1 Central Monitoring Room 15-5
15.4.1.2 Field Response and Incident Command 15-5
15.4.1.3 Emergency Operations Center 15-6
15.4.1.4 Federal Offsite Emergency Response 15-7
15.4.1.5 Mutual Aid Agreements 15-7
15.4.2 Assessment Actions 15-7
15.4.2.1 Recognition and Categorization of Operational Emergencies 15-7
15.4.2.2 Acquisition of Radiological and Other Hazardous Material Information 15-8
15.4.2.3 Acquisition of Meteorological Information 15-8
15.4.2.4 Estimation of Source Terms and Release Rates 15-8
15.4.2.5 Estimation of Dispersion and Dose Rates 15-9
15.4.2.6 Field Monitoring Teams 15-9
15.4.2.7 Radiological Control 15-9
15.4.2.8 Chemical Monitoring 15-9
15.4.3 Notification 15-10
15.4.4 Emergency Facilities and Equipment 15-10
15.4.5 Protective Actions 15-12
15.4.6 Training and Exercises 15-13
15.4.6.1 Training 15-13
15.4.6.2 Drills and Exercises 15-13
15.4.7 Recovery and Reentry 15-14
15.4.7.1 Entry and Reentry 15-14
15.4.7.2 Termination and Recovery 15-15
15.5 References 15-15

This page intentionally left blank

15.0 EMERGENCY PREPAREDNESS PROGRAM

15.1 INTRODUCTION

This chapter summarizes the essential characteristics of the Emergency Preparedness Program at the Waste Isolation Pilot Plant (WIPP) as it relates to facility safety per U.S. Department of Energy (DOE) Standard DOE-STD-3009-2014, *Preparation of Nonreactor Nuclear Facility Documented Safety Analysis*. The format of this chapter was left as described in DOE-STD-3009, CN3 for Revision 5 of the Documented Safety Analysis (DSA), as allowed by DOE-STD-3009-2014. The Safety Management Program (SMP) Chapters (7.0–18.0) will be reformatted as a consolidated Chapter 7.0 for Revision 6 of the DSA. The chapter includes: a summary of the scope of the *WIPP Emergency Management Plan* (WP 12-9); a description of the program organization, responsibilities, and emergency response capabilities; and a description of emergency preparedness planning.

The Emergency Management Plan provides an organized structure for response to the scope of emergencies identified at WIPP. The objective of the WIPP Emergency Management Program is to minimize the impact of emergency events on the health and safety of plant personnel, the general public, and the environment.

The Emergency Management Program is implemented through WP 12-9, emergency response procedures, and emergency management administrative procedures. In emergency events that could threaten human health or the environment, including hazardous material (radioactive and non-radioactive) (HAZMAT)/waste events, the plan, procedures, and standard operating guides are implemented as is the *Waste Isolation Pilot Plant Hazardous Waste Facility Permit* (HWFP) (NM4890139088-TSDF), Attachment D, “RCRA Contingency Plan.”

The WIPP Emergency Management Program does not provide radiological response to transportation accidents occurring offsite, other than categorizing any offsite transportation event involving WIPP materials as an Operational Emergency Not Requiring Classification, if required. Instead, The DOE Carlsbad Field Office (CBFO) determines the appropriate DOE response for offsite transportation accidents and will initiate responses for these events. WIPP personnel are available to support local and state organizations in such cases, as directed by the CBFO.

The key elements (KEs) of the WIPP Emergency Management Program are as follows:

- **KE 15-1**: Hazards are identified and analyzed through a technical planning basis process to provide pre-determined protective actions and Protective Action Recommendations to protect workers and the public.
- **KE 15-2**: Emergency plans and procedures provide the framework for actions to be taken by workers and responders.
- **KE 15-3**: Emergency response capabilities (e.g., operable equipment, minimum staffing, Incident Command System, Emergency Operations Center) are identified and maintained to respond and protect workers, public, property, and environment.
- **KE 15-4**: Emergency drills and exercises are planned and conducted to provide validation of plans, procedures, and response capabilities.

For safety analysis purposes, the key attributes (KAs) of the WIPP Emergency Management Program described in this chapter are as follows:

- KA 15-1: Nuclear Waste Partnership LLC (NWP) implements the Emergency Management Program as described in WP 12-9.
- KA 15-2: NWP prepares the *U.S. Department of Energy Waste Isolation Pilot Plant Emergency Planning Hazard Survey* (WP 12-RP.01), which identifies the scope of the Emergency Management Program by ensuring that hazards are identified and analyzed as required. The report is maintained in accordance with program documents. The hazard survey serves as a basis for identifying requirements for an Emergency Planning Hazard Assessment (EPHA).
- KA 15-3: NWP develops and maintains the *Waste Isolation Pilot Plant Emergency Planning Hazard Assessment* (DOE/WIPP 08-3378) in accordance with program documents. Emergency Action Levels (EALs) are developed for the spectrum of potential operational emergencies identified in the EPHA. The EALs are revised as necessary when an updated EPHA has been issued.
- KA 15-4: NWP personnel develop and maintain Protective Action Criteria (PAC) that indicate levels where action is necessary to prevent or limit personnel exposure to HAZMAT. Protective actions and Protective Action Recommendations have been developed for HAZMAT and other scenarios identified in the EPHA, as applicable.
- KA 15-5: Emergency Response Organization (ERO) personnel receive National Incident Management System training as described in WP 12-9 and program plans.
- KA 15-6: The WIPP Facility Shift Manager (FSM) or designee evaluates events or conditions to determine whether they meet the EAL criteria. If the event or condition meets the EAL criteria, then the actions are taken according to WP 12-9 and procedures.
- KA 15-7: Emergency response facilities and equipment are maintained in a state of readiness by NWP for response to emergencies. Facilities and equipment used by external partner organizations are maintained by the external organization that responds in accordance with the established mutual aid agreements.
- KA 15-8: WIPP full-time employees, subcontractors, and visitors who have unescorted facility access receive General Employee Training (GET) that includes emergency preparedness training and accompanying actions required during an emergency, including protective actions. Unescorted visitors requiring access to the WIPP receive an orientation regarding emergency preparedness and protective actions prior to receiving a temporary security badge.
- KA 15-9: Emergency preparedness training for emergency response personnel includes exercises and drills to maintain program proficiency and provide for continuous improvement.
- KA 15-10: WIPP emergency response capabilities meet the requirements of DOE Order 420.1C, *Facility Safety*.

15.2 REQUIREMENTS

The standards, regulations, and DOE Orders that are required to form the basis for the Emergency Management Program at the WIPP include the following:

- 10 CFR 851, “Worker Safety and Health Program.”
- 10 CFR 835, “Occupational Radiation Protection,” Section 835.1302, “Emergency Exposure Situations.”

- 29 CFR 1910.120(p), "Occupational Safety and Health Standards," "Certain Operations Conducted Under the Resource Conservation and Recovery Act of 1976 (RCRA)."
- 30 CFR 49, "Mine Rescue Teams."
- 40 CFR 264, "Standards for Owners and Operators of Hazardous Waste Treatment, Storage, and Disposal Facilities."
- 40 CFR 265, Subpart D, "Contingency Plan and Emergency Procedures."
- DOE Order 151.1C, *Comprehensive Emergency Management System.*
- DOE Order 232.2, *Occurrence Reporting and Processing of Operations Information.*
- DOE Order 420.1C, 2012, *Facility Safety.*
- *Waste Isolation Pilot Plant Hazardous Waste Facility Permit* (HWFP) (NM4890139088-TSDF).

15.3 SCOPE OF EMERGENCY PREPAREDNESS

The Emergency Management Program provides an organized structure for response to the scope of emergencies identified at WIPP. An Emergency Planning Hazard Survey, conducted as required by DOE Order 151.1C, is documented in WP 12-RP.01. The report concluded that an EPHA was required for WIPP under the same provision.

The WIPP EPHA, documented in DOE/WIPP 08-3378, analyzed event scenarios similar to the Design Basis Accidents (DBAs) in this DSA, standard workplace hazards, and malevolent acts. EPHA event scenarios ranged from minor to beyond design basis events. The EPHA identifies and describes the Waste Handling processes and operations, and identifies the HAZMAT inside the WIPP Property Protection Area (PPA). The EPHA provides accident consequence analysis and incorporates the Protective Action Guides as published by the U.S. Environmental Protection Agency (EPA) in *Manual of Protective Action Guides and Protective Actions for Nuclear Incidents* (EPA-400-R-92-001). Unlike a typical safety basis document, an EPHA does not use bounding analyses; rather, EPHA analyses must be conservative. DBAs are based on extremely conservative assumptions that are not always appropriate for emergency planning.

The Emergency Management Program applies to response actions relative to the following categories of emergencies:

- Aircraft crash.
- Beyond design basis natural phenomena events.
- Earthquakes/seismic events.
- Medical emergencies.
- Public Health Emergencies.
- Radiological or other HAZMAT emergencies.
- Security emergencies (malevolent acts).
- Severe weather emergencies.
- Structural fires.
- Wildland fires.

- Underground (UG) emergencies.
- Waste Container breaches (surface and UG).

15.4 EMERGENCY PREPAREDNESS PLANNING

This section summarizes emergency preparedness planning activities at the WIPP, including activation of the ERO, assessment actions, notification processes, emergency facilities and equipment, protective actions, training and exercises, assessment actions, and recovery actions. Each of these topics is summarized below and described in detail in the subsequent subsections.

- The Emergency Management Program described in WP 12-9 identifies the necessary actions to activate the ERO and respond to site-wide and area emergencies and defines the lines of authority. These actions and the responsibilities of emergency response personnel and organizations are detailed in the program, as discussed in Section 15.4.1.
- Assessment actions by which the onset of an operational emergency is recognized are summarized in Section 15.4.2. Operational emergencies at the WIPP are classified by EALs that provide specific, predetermined criteria allowing the WIPP personnel to categorize operational emergencies. The process of categorizing and classifying operational emergencies is described in WP 12-9 and detailed in procedures.
- Initial notifications, follow-up notifications, and external agencies notification for operational emergencies are summarized in WP 12-9 and implemented through procedures as summarized in Section 15.4.3.
- Emergency facilities and equipment include identified onsite and offsite facilities for designated personnel to respond to the emergency. Equipment includes: onsite communications; spill response; fire detection and fire suppression equipment; personal protective equipment (PPE); emergency medical equipment; and general plant emergency equipment. Details are discussed in Section 15.4.4.
- The emergency planning process is based on an all-hazards approach and includes considerations for surface and UG emergencies and integrates applicable DOE Orders and other requirements such as those outlined in Occupational Safety and Health Administration (OSHA) and Mine Safety and Health Administration (MSHA) codes and standards.
- Identification of the EALs and protective actions for events, including those involving Contact-Handled (CH) or Remote-Handled (RH) Waste, are described in WP 12-9, detailed in procedures, and discussed in Section 15.4.5.
- Emergency management training consists of formal classroom instruction, self-paced training modules, on-the-job training (OJT), drills, and exercises, as described in WP 12-9, detailed in program plans, and discussed in Section 15.4.6.
- The recovery phase of an emergency is that portion of the response designed to restore the affected area to its pre-emergency state. The recovery process is summarized in Section 15.4.7, described in WP 12-9, and detailed in procedures.

15.4.1 Emergency Response Organization

The ERO structure and responsibilities described in WP 12-9 are summarized in this section.

15.4.1.1 Central Monitoring Room

The ERO is initiated when the Central Monitoring Room Operator (CMRO) is notified of an incident and deploys emergency response assets, implements initial protective actions, and notifies the on-shift WIPP FSM according to procedures. When the FSM recognizes that an operational emergency or significant incident is imminent, in progress, or has occurred, the FSM immediately assumes responsibilities for emergency response, including the following actions:

- Categorizing and classifying the incident.
- Issuing protective actions to onsite personnel.
- Approving and transmitting emergency notifications to offsite agencies.
- Providing Protective Action Recommendation to offsite agencies.
- Directing activation of the Emergency Operations Center.

The FSM is responsible for monitoring balance-of-plant status during the incident. CMROs are responsible for reporting information concerning events to the FSM, monitoring balance-of-plant conditions, and coordinating activities with the Incident Commander. Either the FSM or CMRO will provide first-responders with appropriate information, such as hazards, location of incident, safe route, wind direction, and other incident details as they become available while the Emergency Operations Center is being activated and becoming operational.

The Operational Assistance Team may be activated to provide technical, logistical, and administrative support to the FSM. The Operational Assistance Team is composed of section/group managers and other personnel with the technical expertise and experience necessary to assist during emergency situations. Operational Assistance Team members are directed by the FSM and may be reassigned to other locations/organizations as needed.

Once the Emergency Operations Center achieves minimum staffing and is declared operational, the crisis manager or deputy crisis manager will conduct a turnover briefing with the FSM and formally assume the roles and responsibilities for emergency management functions in support of the Incident Commander.

15.4.1.2 Field Response and Incident Command

Trained responders including WIPP Fire Department, WIPP Protective Force, and local/state law enforcement report to the event scene. One of the senior responders assumes responsibility as the Incident Commander based on the type of event, indicators from the initial notification, facility designations, conditions at the scene, or other factors. Once identified, the Incident Commander assumes control of the incident scene following a briefing from the FSM, establishes an Incident Command Post and informs the CMRO of its location.

The Incident Commander is responsible for the overall coordination and direction of all incident activities, until relieved by another qualified person and formally transferring command. The Incident Commander directs activities at the incident scene and uses the Incident Command System, which provides defined operating characteristics and interactive management components.

The Incident Commander remains solely responsible for the incident response until a unified command structure is established with other response entities. This includes overall responsibility for the safety and health of all personnel and for other persons operating within the Incident Command System, such as

supplemental fire departments and law enforcement agencies responding in accordance with mutual aid agreements (e.g., Memoranda of Understanding, Memoranda of Agreement, Mutual Aid Agreements, and Agreements in Principle).

Offsite agencies supporting response efforts typically integrate into the Incident Command System forming a Unified Command structure. Unified Command uses individuals designated by their jurisdictional authorities to jointly determine objectives, plans, and priorities and work together to execute them.

Fire Department personnel are full-time emergency response personnel who respond when lives and/or property are threatened at WIPP (e.g., medical, fire, HAZMAT). The on-shift Fire Department Lieutenant (senior officer on-scene) typically serves as the Incident Commander for medical, fire, and HAZMAT response or the Operations Section Chief for other responses, as needed. Fire Department personnel can provide support to the Mine Rescue Team, but are not qualified as Mine Rescue Team members.

The Emergency Response Team (ERT) is an industrial Fire Brigade that consists of volunteer site employees from many departments and supplements the WIPP Fire Department capabilities. The Fire Brigade is maintained in accordance with National Fire Protection Association (NFPA) Standards 600 and 1081. This training does not include wildland firefighting. ERT members are trained as first responders in firefighting, limited technical rescue, and HAZMAT response. The number of responders needed is specific to the emergency situation. In the event of an emergency, ERT members will leave their normally assigned duties and assume the duties of the ERT. This group is available on any shift, varying in number during normal working hours, to assist the Fire Department during emergency responses. The ERT responds to emergencies that threaten lives and/or property at WIPP (e.g., medical, fire, HAZMAT). The ERT can provide support to the Mine Rescue Team, but are not qualified as Mine Rescue Team members.

The Mine Rescue Teams are made up of volunteer members and are responsible for UG reentry and rescue. Mine Rescue Teams are trained in accordance with 30 CFR 49. Mine Rescue Team training includes breathing apparatus, barricading, first aid, gas detection, search and recovery, ventilation, fire control, contaminated patient handling, and mine mapping. The Mine Rescue Teams participate in mine rescue competitions and site drills to test the effectiveness of training. Mine Rescue Team members, like the ERT, must be activated and leave regular positions and duties. The Mine Rescue Team can provide support to the FD/ ERT; however, they are not trained in interior attack structural or wildland firefighting, confined space, HAZMAT, high angle rescue, or trench rescue.

Protective Force personnel will respond to notification of a WIPP-related emergency in a manner consistent with the WIPP Security Plan. The Security Section Manager (or designee) will verify that the necessary security actions have taken place and will further respond to the event. Security plans, procedures, and DOE Orders provide guidance on actions that will be taken in each type of credible security emergency. During security or law enforcement events, security will request mutual aid assistance from offsite agencies and will act as the Incident Commander.

15.4.1.3 Emergency Operations Center

The Emergency Operations Center consists of various subject matter experts who ensure an adequate level of support for the onsite response and recovery activities and provide the Emergency Operations Center site-specific information relative to offsite interaction and strategic decision-making. During a major event, CBFO and NWP senior management stakeholders may need to be involved in the overall incident to support strategic decision-making, focusing on policy decisions, and significant expenditures.

15.4.1.4 Federal Offsite Emergency Response

The DOE Radiological Assistance Program (RAP) Team makes emergency radiological response teams available to any accident location with a number of specialized monitoring instruments to aid in the rapid assessment and mitigation of major radiological incident consequences. WIPP supports the regional RAP Team with personnel and equipment for responding to offsite radiological emergencies. A DOE RAP Team Leader from the CBFO or another facility will respond to an event with the WIPP RAP Team. The team provides resources, monitoring/sampling, assessment, contamination control, and decontamination assistance in radiological emergencies.

The Incident/Accident Response Team is a CBFO program administered by NWP according to the WIPP Incident/Accident Response Team Plan for the purpose of providing expertise in packaging and transportation to safely expedite the recovery of any Type B Transuranic (TRU) Waste package involved in an incident/accident. The primary function of the Incident/Accident Response Team is to ensure the safe and uneventful recovery of any Type B package with safety and protection of the team members, emergency responders, the public, and the environment taking priority over all other considerations.

15.4.1.5 Mutual Aid Agreements

The WIPP offsite interface program identifies mutual aid requirements, facilitates the establishment of mutual aid agreements with jurisdictions possessing necessary resources, and establishes an ongoing dialogue with offsite emergency management agencies and other key stakeholders. These interfaces support the development of integrated plans and procedures and the planning and conduct of mutual aid-required training, drills, and exercises. The offsite interface effort includes the potential for offsite impacts from site emergencies and the level of assistance that may be required from offsite emergency organizations to support a response.

Appropriate mutual aid agreements between CBFO and local and state agencies are established to document an assistance commitment and to define the points of contact, mutual expectations, and working relationships. Depending on the location, severity, and type of emergency, mutual aid assistance may be requested to support responses at WIPP. Assistance may also be requested from WIPP to support responses by offsite agencies through mutual aid agreements. A summary of the Mutual Aid Agreements is included in WP 12-9.

15.4.2 Assessment Actions

This section summarizes the processes by which the onset of an operational emergency is recognized and the methodology used to obtain meteorological information and estimate release rates and source terms.

15.4.2.1 Recognition and Categorization of Operational Emergencies

An operational emergency must be declared when a major unplanned or abnormal event or condition occurs that: involves or affects the site/facilities and activities by causing or having the potential to cause serious health and safety or environmental impacts; requires resources from outside the immediate/affected area or local event scene to supplement the initial response; and requires time-urgent notifications to initiate response activities at locations beyond the event scene.

Operational emergencies involving the release of HAZMAT (i.e., chemical or radiological hazardous material) on or from DOE sites or facilities are classified according to the severity to ensure rapid response communications and notifications commensurate to the degree of hazard presented by the event.

The primary focus of the classification process is the initiation of immediate actions to protect the personnel onsite and offsite. A graded approach is used based on the severity of the event or conditions.

Operational emergencies not requiring classification must be declared when events occur that represent a significant degradation in the level of safety at a site/facility and that require time-urgent response efforts from outside the site/facility. Types of potential operational emergencies not requiring classification incidents at WIPP include those affecting health and safety, the environment, security and safeguards, and offsite DOE transportation activities. Operational emergencies involving the uncontrolled airborne release of HAZMAT must be classified as an Alert, Site Area Emergency, or General Emergency, in order of increasing severity.

Events and event symptoms are recognized through direct observation and/or monitoring of indicators. Emergency response actions can be triggered by the events listed in Section 15.3. The FSM follows procedures and uses EALs to categorize and classify incidents, as applicable. EALs are specific, pre-determined, observable criteria used by the decision-making authority to promptly detect, recognize, and determine the categorization/classification of emergencies and associated protective actions. EALs are developed for a wide spectrum of potential operational emergencies identified in the EPHA and associated procedure.

15.4.2.2 Acquisition of Radiological and Other Hazardous Material Information

The hazards survey documented in WP 12-RP.01 determined that the radiological and other HAZMAT content of the TRU Waste received and disposed of at WIPP is the source of material at risk (MAR) that could cause an operational event to be classified as an Alert or higher classification.

The WIPP Waste Data System (WDS) provides an online source of data identifying the waste form, type of payload, weight, and radionuclide inventory of each Waste Container shipped to WIPP. The WIPP Waste Information System is a subset of the WDS. The Emergency Operations Center Consequence Assessment Team performing dose assessment has access to WDS radiological data. Additionally, *Consequence Assessment* procedure contains a list of radiological MAR for events described in this DSA and the EPHA that can be used for initial dose assessment.

15.4.2.3 Acquisition of Meteorological Information

The WIPP site meteorological monitoring tower is located approximately 1,970 feet northeast of the Waste Handling Building (WHB). Instrumentation on the tower measures and records wind speed, wind direction, and temperature at elevations of 2, 10, and 50 meters. The data are displayed in the Central Monitoring Room (CMR) and in the Emergency Operations Center. Potential dose consequences estimated per the consequence assessment procedure are performed by the Consequence Assessment Team in the Emergency Operations Center, and personnel performing the procedure have access to the meteorological information.

15.4.2.4 Estimation of Source Terms and Release Rates

Initial consequence assessment is performed as soon as the Emergency Operations Center is activated and the Consequence Assessment Team has reported to the Emergency Operations Center. Initial plume models may be a worst-case scenario, clearly marked as such, and may use real-time meteorological data. Once an accurate estimate of the source term is available, subsequent modeling uses the estimated source term together with real-time meteorological data.

Plume modeling projections are performed in accordance with the *Consequence Assessment* procedure, and consist of the following:

- Source term data, which identifies the hazardous substance, the release rate or quantity, release mechanism, and conditions pertaining to the assumptions used in the model.
- Meteorology, including ambient temperature, atmospheric stability class, wind direction, and wind speed.
- Maximum deposition projections for radiological releases to include concentrations, location, and downwind distance.
- Plume footprint (as model allows), showing a base map of the site and surrounding area overlaid with a graphic image of the plume, real or projected time, and the concentrations of the plume as a function of the PAC.

15.4.2.5 Estimation of Dispersion and Dose Rates

Radiological release consequence determinations are made in accordance with consequence assessment procedure using the NARAC (National Atmospheric Release Advisory Center) and HotSpot computer-based dispersion modeling software. The NARAC system is used as the continuous dose assessment tool for corroborating timely initial assessment and field monitoring of radiological, chemical, and/or biological releases. This computer-based system uses actual weather and terrain data to assess transport, diffusion, and deposition on a regional scale. HotSpot is a Gaussian straight-line plume model used to calculate atmospheric dispersion and dose.

15.4.2.6 Field Monitoring Teams

Field Monitoring Teams may be dispatched to gather actual onsite or offsite field data and compare it against Consequence Assessment Team projections. Actual monitoring data are used to assess actual environmental consequences, verify computer projections of the location and magnitude for radiological and chemical releases, and conduct habitability studies. Monitoring data may be provided to offsite agencies by the Emergency Operations Center.

15.4.2.7 Radiological Control

WIPP Radiological Control maintains necessary equipment to perform radiological monitoring at the incident area. The Radiological Control Technicians (RCTs) are dispatched to perform radiological monitoring to determine safe evacuation routes and conduct monitoring at the furthest distance from the source of where measurable readings are probable. The RCTs use the outer boundaries of the affected sectors at that distance to initiate measurements to determine the footprint of the plume. When RCTs are dispatched to perform area surveys, they assess the immediate consequences of a radiological release by collecting air samples, determining ambient radiation levels, and determining the extent of contamination. This information is also used by the Consequence Assessment Team to refine source term calculations and plume models and assess consequences.

15.4.2.8 Chemical Monitoring

The Environmental, Safety, and Health Department maintains the necessary equipment to perform limited chemical sampling and airborne concentration sampling. Chemical sampling data are used by Consequence Assessment Team personnel to refine projection models and assess risks. The chemical inventory at WIPP was analyzed in the Emergency Planning Hazard Survey (WP 12-RP.01) and screened

out of the EPHA with the exception of beryllium (for which there is no practical or expedient method to monitor for a release), and therefore does not constitute the need for a chemical field monitoring capability. Mutual aid for non-radiological HAZMAT teams may be requested to support a chemical release incident that would affect WIPP.

15.4.3 Notification

All onsite emergencies must be reported immediately to the CMRO. Emergency notification of site employees is performed by the CMRO using the site alarm system and the facility public address system. In the event the CMR loses power, the CMRO will use the available public address system, mine pager phone, direct radio frequencies, and/or Protective Force personnel to provide emergency notifications and protective action information.

The FSM is responsible for initial notifications regarding an operational emergency. Notifications are made offsite to Eddy County, Lea County, the State of New Mexico, and the DOE HQ Watch Office using the Emergency Notification Form, followed by a phone call confirming receipt according to procedures. The initial notification must be made within 15 minutes of categorization and classification for an Operational Emergency Requiring Classification or within 30 minutes of categorization for an Operational Emergency Not Requiring Classification, as required by DOE Order 151.1C. A second Emergency Notification Form will be sent to the same offsite agencies approximately one hour after the first form was sent, and at timely intervals thereafter or any time important information changes. The FSM will send all additional Emergency Notification Forms, unless the Emergency Operations Center is operational and has assumed responsibility for the notifications. A final termination Emergency Notification Form will be sent after the emergency response has been terminated.

Dependent upon the type of incident, the FSM may also be required by procedures to make additional notifications including notification to local ranchers and oilfield companies, and the State Mine Accident Emergency Operations Center, MSHA, and required RCRA notifications.

Notification requirements for emergency events and/or occurrences not categorized as operational emergencies are detailed in DOE Order 232.2, *Occurrence Reporting and Processing of Operations Information*. These notifications are also made according to procedures.

The Joint Information Center (JIC) is activated at the direction of the Emergency Operations Center Public Affairs Officer, NWP Communications Manager, or DOE Spokesperson. The JIC can be activated either in whole or in part, as required by EALs or, as warranted, based on the event, level of news media attention, or public concern. The Emergency Operations Center Public Affairs Officer serves as the main interface between the JIC and the Emergency Operations Center. The JIC is authorized to issue emergency public information in a timely and accurate manner to employees, affected communities, the general public, news media, and elected officials.

15.4.4 Emergency Facilities and Equipment

This section summarizes pertinent aspects of emergency facilities (i.e., location, function) and equipment (i.e., communication capabilities, emergency equipment) required to support the facility emergency responses.

NWP performs a Baseline Needs Assessment of the WIPP emergency response capabilities to meet the requirements of DOE Order 420.1C, in accordance with directives, guidance, and expectations including DOE Order 151.1C in order to establish minimum fire suppression resources and support the

determination of overall Emergency Management needs. Based on the identified hazards in the DSA and the EPHA, the required levels of emergency response were analyzed. DOE/WIPP 11-3471 identifies the minimum resources necessary to respond to a fire and simultaneous medical emergency and options for implementation.

- **Central Monitoring Room**: The primary CMR, located in Building 451, is the coordination point for site activities and the focal point for communications between the surface and UG facilities. The CMR contains instrumentation and equipment for reading UG and surface operations parameters, including radiation monitors and alarms. The CMR also has the capability of controlling some plant functions.
- **Alternate Central Monitoring Room**: The alternate CMR is located within the Security Operations Center in the Guard and Security Building (458). Capabilities at the alternate location are currently limited and include access to landline telephones, mine pager phones, and Central Monitoring System (CMS) access (once logged in).
- **Emergency Operations Centers**: The Emergency Operations Center-Skeen-Whitlock Building is a dedicated, state-of-the-art facility located on the first floor of the Skeen-Whitlock Building at 4021 National Parks Highway in Carlsbad, New Mexico. The Emergency Operations Center-WIPP is a dedicated facility located Room 108 on the first floor of the Safety and Emergency Services Building (452). This location may also be used as a fixed Incident Command Post, area command, and other contingency needs. The Emergency Operations Center locations may be secured at the direction of the crisis manager, allowing access for approved personnel only. During normal operations, the Emergency Operations Center locations may be used as a location for ERO training and emergency management activities. In addition to serving the needs of WIPP, the Emergency Operations Center locations may also be used to provide assistance to the city of Carlsbad, Eddy County, Lea County and the state of New Mexico if requested as part of the mutual aid agreements with these entities.
- **Fire/EMS Station and Vehicle Bays**: The Fire Department vehicles and equipment are deployed from the Fire Department vehicle bays located in the Safety and Emergency Services Building (452). Emergency medical facilities are located in Room 120 of the same building, adjacent to the bays, and are used to care for injured or ill personnel.
- **Joint Information Center**: The JIC is a non-dedicated facility located in Rooms T111 and T112 of the Skeen-Whitlock Building in Carlsbad, New Mexico. Access to the rooms is controlled when the JIC is activated. During normal operations, the rooms function as conference rooms.
- **Decontamination Facilities**: A decontamination trailer is available at WIPP with hot and cold running water. It has decontamination equipment available that includes towels, soap, shampoo, modesty garments, gloves, bags, etc.
- **Medical Facilities**: Medical facilities are staffed by Site Health Services and located in Room 121 of the Safety and Emergency Services Building (452). There is a dedicated facility with day-shift staff trained to the advanced life support level who primarily respond to occupational-related injuries or illness.
- **Security Operations Center**: The Security Operations Center is located in the Guard and Security Building (458) at the WIPP and is a dedicated facility staffed 24/7 to monitor, process, and validate all security alarms and incidents within the WIPP.
- **Communications Equipment**: Multiple independent communication/notification systems and equipment are used at the WIPP site to notify onsite populations and offsite authorities. Many of the communication systems are used daily for routine activities. Other systems are used only

during emergencies and require formal testing on specified frequencies to ensure operability. Emergency communications equipment is on various frequencies depending on the equipment and its purpose. The plant monitoring and communications systems include onsite and plant-to-offsite coverage and are designed to provide immediate instructions to ensure personnel safety, facility safety and security, and efficient operations during normal and emergency conditions. This includes an alarm system to notify personnel of situations that require their action to protect themselves. The WIPP Emergency Management Communications Plan describes many of the site's emergency communication systems.

- **Emergency Equipment**: WIPP maintains various types of emergency equipment. The emergency equipment is inspected and maintained by the Fire Department, RCTs, ERTs, Mine Rescue Team members, and the emergency management staff in accordance with applicable procedures. A detailed list of WIPP emergency equipment, to include Fire Department equipment, transportation equipment, mine rescue equipment, and emergency power equipment, is contained in the WIPP RCRA Contingency Plan. Radiological and non-radiological HAZMAT detection equipment, ranges, and types are described in Chapter 7.0, "Radiation Protection," and Chapter 8.0, "Hazardous Material Protection," respectively.

15.4.5 Protective Actions

Protective actions are measures taken to prevent or minimize potential health and safety impacts on workers, responders, or the public. Conservative decision-making relating to protective actions is the foundation for protecting people. WIPP protective actions include evacuate, shelter in place, remain indoors, and self-barricade. Protective actions are implemented in a 360-degree radius for all events, regardless of the wind direction, during the initial emergency response phase, and are monitored and revised as needed throughout the event.

The WIPP EPHA serves as the basis for EALs, which are the specific, pre-determined, observable criteria used by the decision-making authority to promptly detect, recognize, and determine the categorization/classification of emergencies and associated protective actions. EALs are developed for a wide spectrum of potential operational emergencies identified in the EPHA and associated procedure.

Pre-planned, conservative protective actions are associated with the EALs and incorporated into the categorization/classification procedure used by the FSM or crisis manager, so that the issuance of protective actions is automatic upon declaration of an operational emergency and selection of an EAL. Protective actions are then communicated to site personnel through the various site communication systems.

Default protective actions for worst-case scenarios are generally implemented prior to or upon declaration of an operational emergency, although pre-planned protective actions may be implemented in the very early stages of an event, when little information is known about the severity of the incident. The protective actions may be revised based on the incident and weather conditions as determined by the FSM or crisis manager and the Incident Commander.

Upon recognition of an event, individuals typically take immediate actions to evacuate from the area to a safe location. Populations in nearby facilities (within the hazard area), however, may not be aware that an incident has taken place, making it extremely important to notify these personnel that they should take protective actions. In most cases, the primary strategy for protecting site workers is early recognition and notification to shelter in place, followed by a well-planned evacuation.

Evacuation is the movement of persons from a dangerous place due to the threat or occurrence of an emergency event to a designated area. Primary and alternate assembly areas (for building evacuations) and staging areas (for site evacuations) have been established. Depending upon the type of emergency and level of response required it may be necessary to evacuate part or all of the affected facilities at WIPP including the UG, which requires workers to brass-in and brass-out for accountability.

For HAZMAT operational events, additional protective actions such as decontamination and access control may be applicable. In addition, to help protect workers and the public, an Emergency Planning Zone was determined. The Emergency Planning Zone is the area within which the EPHA results indicate a need for specific and detailed planning to protect people from the consequences of HAZMAT releases. The WIPP EPHA provides the basis for the Emergency Planning Zone.

The re-evaluation of protective actions / protective action recommendations is performed throughout the response as additional information is acquired about the event. The evaluation of habitability for areas being used by responders and personnel sheltering-in-place is part of the continuing evaluation for protective actions.

Accountability is one of the critical concerns of the ERO. An accountability process is followed when protective actions are implemented according to appropriate procedures. When the accountability process is complete, whether personnel are missing or not, the information is reported (including the names of missing personnel if known) to the FSM. The FSM then reports the results to the Incident Commander and crisis manager in the Emergency Operations Center, if operational, with emphasis on those missing. The Incident Commander is responsible for the accountability of all responding personnel. The Fire Department and ERTs are trained to perform search and rescue activities if personnel are missing.

In the event of a General Emergency, the default Protective Action Recommendations would be to evacuate the Emergency Planning Zone. Because most access road traffic is large oilfield vehicles, road closure is moved to the intersections with the Jal and Hobbs Highways, as the WIPP access roads have limited locations where large vehicles can turn around. Further, closure at the Jal and Hobbs Highways will ensure that the public is restricted from areas potentially impacted by worst case accidents postulated in the safety basis and the EPHA.

15.4.6 Training and Exercises

Training is provided to all of the ERO, including the JIC, and is a combination of formal classroom or self-paced instruction, OJT, drills, and exercises.

15.4.6.1 Training

Training for ERO personnel, including initial and refresher training, is described in WP 12-9 and the Emergency Management Training Program. Training is developed as described in Chapter 12.0, “Procedures and Training.” The purpose of this training is to ensure safety during emergency responses and to provide skilled emergency management and response personnel to efficiently and effectively respond to an emergency incident. Full-time employees, subcontractors, and visitors who have unescorted facility access receive initial GET that includes emergency preparedness training within 30 days of employment as described in Chapter 12.0.

15.4.6.2 Drills and Exercises

A coordinated program of drills and exercises is an integral part of the WIPP Emergency Management Program. A formal Drill and Exercise Program has been developed that validates all elements of the

WIPP Emergency Management Program over a three-year period. In lieu of actual emergency incidents, drills, and exercises validate both facility- and site-level Emergency Management Program elements by initiating a response to a simulated, realistic event or condition in a manner that replicates an integrated response to an actual event. Emergency drill and exercise scenarios are developed to target desired emergency response capabilities for training and/or testing following a structured and coordinated process according to plans and procedures. This process also incorporates document content requirements for events, drills, and exercises.

Members of the ERO are required to participate in at least one drill or exercise annually to demonstrate proficiency in assigned response duties and responsibilities.

An evaluated facility operations-based exercise must be conducted annually to demonstrate emergency response capabilities. A site-level operations-based exercise that includes external evaluation and invitations to offsite response organizations, known as a full participation exercise, must be conducted every three years. The DOE and offsite agencies and organizations that provide mutual aid to WIPP during emergencies are notified of, and may participate in, the full participation exercise.

15.4.7 Recovery and Reentry

15.4.7.1 Entry and Reentry

Entry activities are actions taken by responders such as rescuing live or potentially live victims, stopping radiological or other HAZMAT leaks, shutting off valves/controls, and similar activities. These actions are performed following strict procedures and are typically time-urgent activities requiring immediate approval by the Incident Commander. Approval of dose or concentration limits is required for time-urgent entry activities.

Reentry activities involve reentering a facility or affected area that has been evacuated or closed to personnel access during the course of the emergency. Reentry into a fixed facility should be coordinated with the CMR/FSM to ensure situational awareness of facility and plant systems status. The two types of reentry are before termination (during the mitigation of the emergency) and following termination. Reentry activities that occur before termination of the operational emergency require a contingency plan or reentry plan to ensure the safety of reentry personnel, including planning for the rescue of reentry teams. The activities of reentry and rescue teams are planned to minimize risk to personnel, and follow specific protocols.

Post-termination reentry is approved by the Recovery Manager(s) after consultation with CBFO and NWP senior leadership. Each individual authorized to perform emergency actions likely to result in occupational doses exceeding the values of the limits provided in 10 CFR 835.202, “Occupational Dose Limits for General Employees,” subparagraph (a), must be trained according to 10 CFR 835.901, “Radiation Safety Training,” subparagraph (b), and briefed beforehand on the known or anticipated hazards to which the individual will be subjected. Dose limits greater than 25 rem to the whole body for urgent life-saving reentry must be approved by the Incident Commander after consultation from the Emergency Operations Center Safety-Health Physics (radiological/criticality incidents) and with concurrence from the crisis manager, if available. In this circumstance WP 12-9, *WIPP Emergency Management Plan*, designates the Incident Commander/crisis manager as “operating management” with regard to 10 CFR 835.1302. The Emergency Operations Center will be briefed before or after entry/reentry is made, based on time urgency for life safety. For non-life-saving reentry, the crisis manager will be briefed and approve the reentry plan prior to entering the hazard area.

15.4.7.2 Termination and Recovery

The termination process, as outlined in WP 12-9 and performed in accordance with procedures, begins when personnel in charge of the response effort determine that conditions are sufficiently stabilized to begin comparing event conditions to pre-established termination criteria. An operational emergency is terminated by the Emergency Operations Center following discussions with the Incident Commander. The emergency cannot be terminated until a predetermined set of criteria have been met, a Preliminary Recovery Plan Outline has been developed and approved, and a termination Emergency Notification Form has been approved. The Preliminary Recovery Plan Outline provides the recovery organization with a starting point.

Submission of the Preliminary Recovery Plan Outline at the termination of the emergency signals the transition from the emergency phase into the recovery phase. Recovery, which is performed in accordance with procedures, includes those actions necessary to return an incident area and the surrounding environment to pre-emergency or an agreed upon safe condition. Upon termination of the emergency, the ERO is replaced by the recovery organization to manage and implement the recovery plan. If the emergency produced offsite impacts, then the recovery organization should include a liaison for offsite interface with the state and local agencies to assist in the development and implementation of recovery actions. Post-termination reentry exposure limits are approved by the Recovery Manager after consultation with CBFO and NWP senior leadership.

15.5 REFERENCES

10 CFR 835, “Occupational Radiation Protection,” Section 835.202, “Occupational Dose Limits for General Employees,” *Code of Federal Regulations*. U.S. Government Printing Office, Washington, DC.

10 CFR 835, “Occupational Radiation Protection,” Section 835.901, “Radiation Safety Training,” *Code of Federal Regulations*. U.S. Government Printing Office, Washington, DC.

10 CFR 835, “Occupational Radiation Protection,” Section 835.1302, “Emergency Exposure Situations,” *Code of Federal Regulations*. U.S. Government Printing Office, Washington, DC.

10 CFR 851, “Worker Safety and Health Program,” Appendix A.2, “Fire Protection,” *Code of Federal Regulations*. U.S. Government Printing Office, Washington, DC.

29 CFR 1910, “Occupational Safety and Health Standards,” Section 1910.120, “Hazardous Waste Operations and Emergency Response,” Subparagraph (p), “Certain Operations Conducted Under the Resource Conservation and Recovery Act of 1976 (RCRA),” *Code of Federal Regulations*. U.S. Government Printing Office, Washington, DC.

30 CFR 49, “Mine Rescue Teams,” *Code of Federal Regulations*. U.S. Government Printing Office, Washington, DC.

40 CFR 264, “Standards for Owners and Operators of Hazardous Waste Treatment, Storage, and Disposal Facilities,” *Code of Federal Regulations*. U.S. Government Printing Office, Washington, DC.

40 CFR 265, “Interim Status Standards for Owners and Operators of Hazardous Waste Treatment, Storage, and Disposal Facilities,” Subpart D, “Contingency Plan and Emergency Procedures,” *Code of Federal Regulations*. U.S. Government Printing Office, Washington, DC.

DOE Order 151.1C, *Comprehensive Emergency Management System*, November 2, 2005, U.S. Department of Energy, Washington, DC.

DOE Order 232.2, *Occurrence Reporting and Processing of Operations Information*, August 30, 2011, U.S. Department of Energy, Washington, DC.

DOE Order 420.1C, *Facility Safety*, December 4, 2012, U.S. Department of Energy, Washington, DC.

DOE-STD-3009-94, CN3. *Preparation Guide for U.S. Department of Energy Nonreactor Nuclear Facility Documented Safety Analyses*, March 2006, U.S. Department of Energy, Washington, DC.

DOE-STD-3009-2014, *Preparation of Nonreactor Nuclear Facility Documented Safety Analysis*, November 2014, U.S. Department of Energy, Washington, DC.

DOE/WIPP 08-3378, *Waste Isolation Pilot Plant Emergency Planning Hazard Assessment* (current revision), U.S. Department of Energy, Carlsbad Area Office, Carlsbad, NM.

DOE/WIPP 11-3471, *Baseline Needs Assessment for WIPP* (current revision), Nuclear Waste Partnership LLC, Carlsbad, NM.

EPA-400-R-92-001, 1992, *Manual of Protective Action Guides and Protective Actions for Nuclear Incidents*, May 1992, U.S. Environmental Protection Agency, Washington, DC.

HWFP, *Waste Isolation Pilot Plant Hazardous Waste Facility Permit* NM4890139088-TSDF (current revision), New Mexico Environment Department, Santa Fe, NM.

NFPA 600, *Standard on Facility Fire Brigades*, 2015 Edition, National Fire Protection Association, Quincy, MA.

NFPA 1081, 2012, *Standard for Industrial Fire Brigade Member Professional Qualification*, 2012 Edition, National Fire Protection Association, Quincy, MA.

WP 12-9, *WIPP Emergency Management Plan* (current revision), Nuclear Waste Partnership LLC, Carlsbad, NM.

WP 12-RP.01, *U.S. Department of Energy Waste Isolation Pilot Plant Emergency Planning Hazards Survey Report* (current revision), Nuclear Waste Partnership LLC, Carlsbad, NM.

Table of Contents

16.0 PROVISIONS FOR DECONTAMINATION AND DECOMMISSIONING – DELETED..... 16-1

This page intentionally left blank

16.0 PROVISIONS FOR DECONTAMINATION AND DECOMMISSIONING - DELETED

This page intentionally left blank

Table of Contents

17.0 MANAGEMENT, ORGANIZATION, AND INSTITUTIONAL SAFETY PROVISIONS 17-1
17.1 Introduction 17-1
17.2 Requirements 17-3
17.3 Organizational Structure, Responsibilities, and Interfaces 17-3
17.3.1 Organizational Structure 17-4
17.3.2 Organizational Responsibilities 17-6
17.3.3 Staffing and Qualifications 17-8
17.4 Safety Management Policies and Programs 17-8
17.4.1 Contractor Assurance System 17-9
17.4.2 Configuration Management 17-9
17.4.3 Occurrence Reporting and Lessons Learned 17-10
17.4.4 Safety Culture 17-11
17.5 References 17-13

List of Tables

Table 17.1-1. Program References 17-2

List of Figures

Figure 17.3-1. Nuclear Waste Partnership LLC Organization Structure 17-5

This page intentionally left blank

17.0 MANAGEMENT, ORGANIZATION, AND INSTITUTIONAL SAFETY PROVISIONS

17.1 INTRODUCTION

The purpose of this chapter is to present information on the management, organization, and institutional safety provisions at the Waste Isolation Pilot Plant (WIPP) that support facility safety per U.S. Department of Energy (DOE) Standard DOE-STD-3009-2014, *Preparation of Nonreactor Nuclear Facility Documented Safety Analysis*. The format of this chapter was left as described in DOE-STD-3009-94, CN3, for Revision 5 of the Documented Safety Analysis (DSA), as allowed by DOE-STD-3009-2014. The Safety Management Program (SMP) Chapters (7.0–18.0) will be reformatted as a consolidated Chapter 7.0 for Revision 6 of the DSA.

The objectives of this chapter are to describe (1) the overall structure of the organizations and entities involved in safety-related functions, including key responsibilities and interfaces; and (2) the safety programs that promote safety consciousness and morale, including safety culture, performance assessment, configuration and document control, occurrence reporting, and staffing and qualification. The WIPP is managed and operated by Nuclear Waste Partnership LLC (NWP).

The key element (KE) of the WIPP Management, Organization, and Institutional Safety Provisions is as follows:

- **KE 17-1**: Configuration management of Structures, Systems, and Components (SSCs) identified in accordance with DOE Order 433.1B, *Maintenance Management Program for DOE Nuclear Facilities*.

For safety analysis purposes, the key attributes (KAs) of the NWP management, organization and institutional safety provisions described in this chapter are as follows:

- KA 17-1: NWP implements an Integrated Safety Management System (ISMS) based on DOE Policy 450.4A, *Integrated Safety Management Policy*, 48 *Code of Federal Regulations* (CFR) 970.5223-1, “Integration of ES&H into Work Planning and Execution.”
- KA 17-2: The responsibility for safe operation of WIPP lies with line management, culminating with the NWP President and Project Manager.
- KA 17-3: Organizational roles and responsibilities for performing the NWP scope of work are specified.
- KA 17-4: NWP implements a Contractor Assurance System in accordance with DOE Order 226.1B.
- KA 17-5: Reserved.
- KA 17-6: NWP implements an Unreviewed Safety Question (USQ) process that meets the requirements of the *Code of Federal Regulations*, Title 10, Part 830.203 (10 CFR 830.203), “Unreviewed Safety Question Process.”
- KA 17-7: Occurrence reporting processes that implement the requirements of *Occurrence Reporting and Processing of Operations Information* (DOE Order 232.2) are maintained.
- KA 17-8: NWP implements an Operating Experience and Lessons Learned program in accordance with DOE Order 210.2A.

- KA 17-9: Assessment and Corrective Action Processes are implemented to address safety reviews and performance assessments (WP 15-CA1002, *Self-Assessments*).
- KA 17-10: Occupational Safety and Industrial Hygiene Programs for workers are implemented in accordance with the requirements of 10 CFR 851, "Worker Safety and Health Program" and WP 15-RA.01, *Nuclear Safety and Worker Safety and Health Compliance Program.*
- KA 17-11: NWP safety programs incorporate the applicable Mine Safety and Health Administration (MSHA) requirements found in 30 CFR 57, "Safety and Health Standards – Underground Metal and Nonmetal Mines."
- KA 17-12: NWP embraces and develops strategies to attain a strong safety culture consistent with DOE Policy 450.4A and DOE Guide 450.4-1C.
- KA 17-13: NWP implements a Document Control process in accordance with DOE Order 422.1.

A summary of organizational and safety management policies and program documents referenced in this chapter are summarized in Table 17.1-1.

Table 17.1-1. Program References

Document Number	Title
DOE/CBFO 09-3442	*CBFO Integrated Safety Management System Description*
MC 3.1	*Environmental, Safety and Health Department*
MP 1.12	*Worker Protection Policy*
MP 1.28	*Integrated Safety Management*
MP 1.40	*Management and Supervisor Training Qualifications*
TIM	*Waste Isolation Pilot Plant Training Implementation Matrix*
WP 02-AR3001	*Unreviewed Safety Question Determination*
WP 02-RP.03	*Waste Isolation Pilot Plant Human Factors Evaluation*
WP 09	*Conduct of Engineering*
WP 12-ES3918	*Reporting Occurrences in Accordance with DOE Order 232.2*
WP 12-IS.01-1	*Industrial Safety Program – Barricades and Barriers*
WP 12-IS.01-6	*Industrial Safety Program – Visitor, Vendor, User, Tenant, and Subcontractor Safety Controls*
WP 12-IS3002	*Job Hazard Analysis Performance and Development*
WP 13-1	*Nuclear Waste Partnership LLC Quality Assurance Program Description*
WP 15-GM.02	*Worker Safety and Health Program Description*
WP 15-GM.03	*Integrated Safety Management System Description*
WP 15-GM1002	*Issues Management Processing of WIPP Forms*
WP 15-PA.01	*Operating Experience / Lessons Learned Program*
WP 15-PA2000	*Lessons Learned Bulletin Development*
WP 15-PS.2	*Procedure Writer's Guide*

Document Number	Title
WP 15-PS3002	*Controlled Document Processing*
WP 15-PS.01	*Procedures Program*
WP 15-RA.01	*Nuclear Safety and Worker Safety and Health Compliance Program*

17.2 REQUIREMENTS

The standards, regulations, and DOE orders required for establishing the safety basis for WIPP specific to management, organization, and institutional safety provisions include the following:

- 10 CFR 830, "Nuclear Safety Management."
- 10 CFR 851, "Worker Safety and Health Program."
- 29 CFR 1910, "Occupational Safety and Health Standards."
- 29 CFR 1926, "Safety and Health Regulations for Construction."
- 30 CFR 57, "Safety and Health Standards – Underground Metal and Nonmetal Mines."
- 48 CFR 970.5223-1, "Integration of Environment, Safety, and Health into Work Planning and Execution."
- DOE Order 210.2A, *DOE Corporate Operating Experience Program.*
- DOE Order 225.1B, *Accident Investigations.*
- DOE Order 226.1B, *Implementation of Department of Energy Oversight Policy.*
- DOE Order 231.1B, *Environment, Safety, and Health Reporting.*
- DOE Order 232.2, *Occurrence Reporting and Processing of Operations Information.*
- DOE Order 420.1C, *Facility Safety.*
- DOE Order 414.1D, *Quality Assurance.*
- DOE Order 422.1, *Conduct of Operations Requirements.*
- DOE Order 425.1D, *Verification of Readiness to Start Up or Restart Nuclear Facilities.*
- DOE Order 426.2, *Personnel Selection, Training, Qualification, and Certification Requirements for DOE Facilities.*
- 19.6.5 NMAC, "New Mexico Mine Safety Code for All Mines Including Open-Cut and Open-Pit."

17.3 ORGANIZATIONAL STRUCTURE, RESPONSIBILITIES, AND INTERFACES

This section summarizes the NWP organizational structure, responsibilities, and interfaces. The organizational structure and the allocation of roles and responsibilities within the organizational structure are subject to change.

The DOE owns and has overall responsibility for the WIPP facility. NWP, as the Management and Operating Contractor of WIPP, provides the management staff, sets the safety culture, issues policies, and

implements programs. The NWP organizations and programs are developed and implemented to ensure and enhance facility safety. The NWP organization structure, responsibilities, and interfaces are summarized in Sections 17.3.1 and 17.3.2 and are identified in the following:

- MP 1.28, *Integrated Safety Management*: This Management Policy identifies the NWP commitment to integrated safety management, the ISMS guiding principles, and safety responsibilities of the NWP President and Project Manager, department managers, line managers, and employees.
- WP 13-1, *Nuclear Waste Partnership LLC Quality Assurance Program Description*: This document defines the NWP implementation of 10 CFR 830, "Nuclear Safety Management," Subpart A, "Quality Assurance Requirements," and DOE Order 414.1D, *Quality Assurance*.
- WP 15-GM.03, *Integrated Safety Management System Description*: This document describes how safety and health are integrated into the work planning and execution at WIPP.
- WP 15-GM-08, *Project Management Plan:* This document defines the organizational alignments and summary level roles and responsibilities for the implementation of the WIPP mission. The document identifies the second level management structure and summarizes their roles and responsibilities.

Program documents described in Chapters 6.0 through 18.0 of this DSA identify program responsibilities and interfaces.

NWP has access to AECOM corporate expertise in disciplines including waste management, risk assessment, safety analysis, environmental services, technical and analytical services, regulatory compliance, transportation, legal, quality assurance (QA), and other disciplines that can be called upon to share information related to and enhance facility safety.

17.3.1 Organizational Structure

As the Management and Operating Contractor for WIPP, NWP is structured to provide management of the following:

- Site operations including Waste Handling and maintenance;
- Repository development, including mining, ground control, hoisting, characterization, and transportation services; and
- Operating support services, including but not limited to industrial safety and health, security, engineering, nuclear safety, radiological control and dosimetry, emergency management, QA, and environmental services.

The NWP organization is structured into operational and operating services organizations under the direction of the President and Project Manager. The senior staff includes the Deputy Project Manager and Recovery Manager, Deputy Recovery Manager, Engineering Manager, QA Manager, Environmental Safety & Health Manager, Human Resources Manager, National TRU Program (NTP) Manager, Operations Manager, and the Chief Financial Officer. The structure of the primary operations and operating service organizations is presented in Figure 17.3-1 and described in the Project Management Plan. Interfaces between operations and operating services are identified in program documents described in Chapters 6.0 through 16.0 of this DSA.

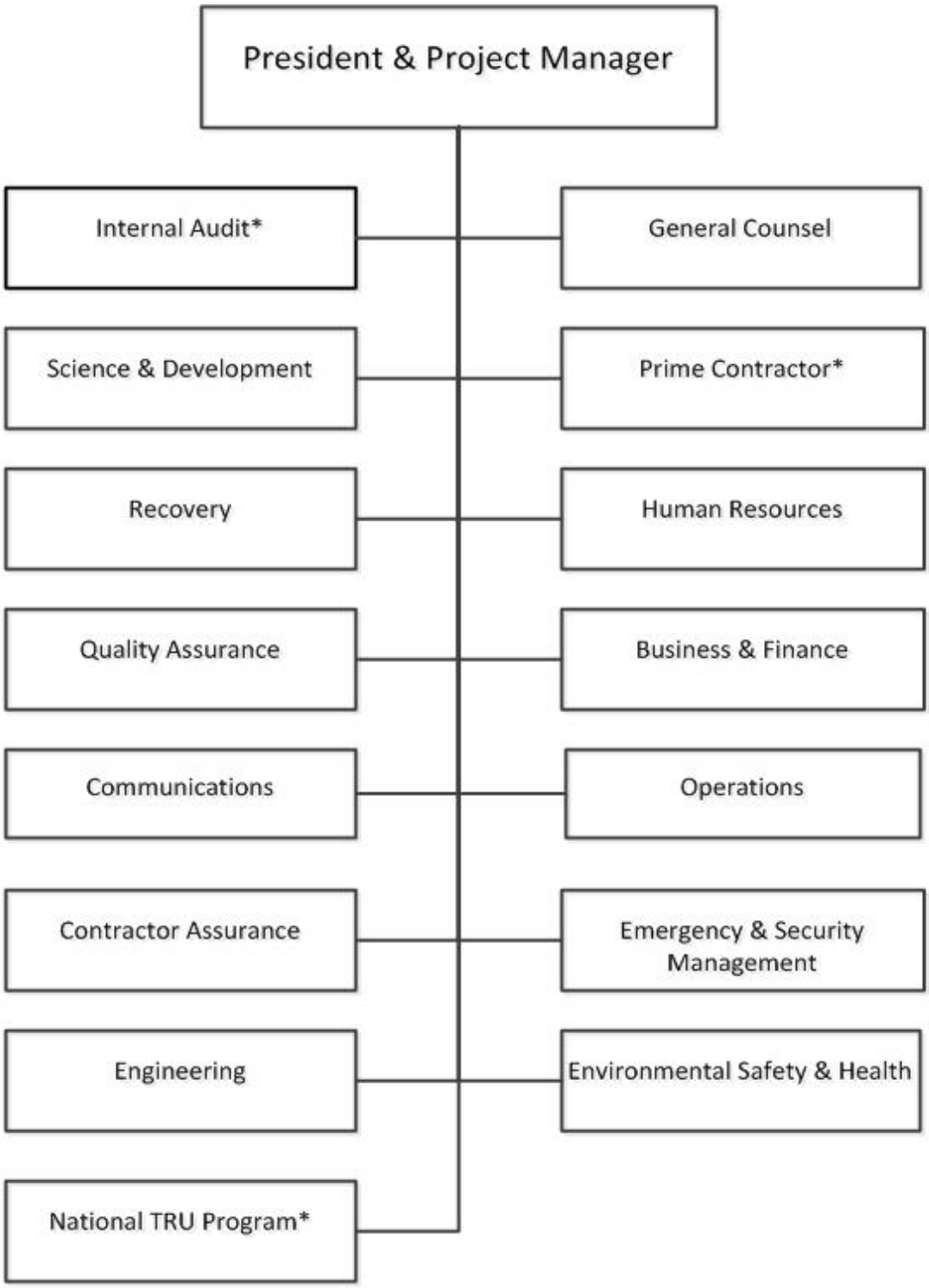

*Information only. Information provided to clarify intra-NWP interfaces. Position is not part of the WIPP operating organization.

Figure 17.3-1. Nuclear Waste Partnership LLC Organization Structure

17.3.2 Organizational Responsibilities

NWP is responsible for general management, day-to-day operations and site Waste Handling operations, mine construction, and operating services. As part of its responsibility, NWP ensures that all inputs to facility operations are reviewed for health, safety, and environmental implications.

The NWP senior staff defines roles and responsibilities to ensure effectiveness of communication during work planning and execution. The NWP President and Project Manager is responsible for managing the company and guiding the management team toward the safe performance of all work. The responsibility for safe operation of WIPP lies with line management, culminating with the President and Project Manager. The President and Project Manager is ultimately responsible for safe accomplishment of work and leads in setting the company standards and expectations for all work under this contract. Management functions are performed according to requirements defined in the operating contract and management policies. Managers are directed to perform field observations and communicate directly with line managers and employees to assess the effectiveness of all site processes in applying safety and environmental standards and requirements.

The NWP President and Project Manager is responsible for leading the NWP management team. The management team is responsible for implementation of the ISMS described in Section 17.4.4. Through implementation of the ISMS, NWP integrates safety, health, and environmental protection into operations and planning and promotes interface between operations and operating services.

The NWP organizational responsibilities are designed to support the following WIPP and interfacing NTP functions:

- **Facility Operations**: Operation and control of surface SSCs including utilities (e.g., electrical, water, sanitary waste); interface with offsite suppliers of electrical and water services.
- **Underground Operations Integration**: Operation and control of Underground (UG) SSCs.
- **Site Infrastructure**: Project and field management of the site's construction activities. Management of plant helpers to support general grounds clean-up, office relocations, and other minor maintenance. Responsible for the site's Condition Assessment Survey program.
- **Waste Operations**: Operation of Waste Handling equipment, handling, storage, and disposal of Transuranic (TRU) Waste at WIPP.
- **Mining Operations:** UG operations, including mining operations and ground control; hoisting operations for operation of the WIPP shafts and hoists.
- **Maintenance Operations**: Maintenance of surface and UG SSCs.
- **Work Control**: Preparation for maintenance and construction support work control documents.
- **Engineering**: Design of new SSCs or modification of existing SSCs; cognizant system engineer program; review of proposed designs; geotechnical engineering; resolution of technical, maintenance, and operational problems; Fire Protection Program (FPP); configuration control. Geotechnical and radiological engineering are part of engineering.
- **Security**: Onsite security of facility and personnel.
- **Emergency Management**: Emergency response planning and training, conduct of drill and exercise program, performance of surveillances, and testing of fire protection systems.

- **Environmental, Safety and Health**: Industrial Safety and Hygiene (IS&H); occupational medical and radiological controls and dosimetry.
- **Radiological Controls and Dosimetry**: Radiation safety.
- **Nuclear Safety**: Criticality safety; development of the Evaluations of the Safety of the Situation (ESSs), DSAs and Technical Safety Requirements (TSRs); development, performance and maintenance of the USQ/Potentially Inadequate Safety Analyses (PISA) process.
- **Regulatory/Environmental**: Regulatory compliance; hazardous site-generated waste; environmental monitoring.
- **Contractor Assurance**: Implementation of DOE Order 226.1B, *Implementation of Department of Energy Oversight Policy*, through the identification of program and performance deficiencies and opportunities for improvement; supporting the development of programs that resolve deficiencies or address continuous improvement; establishing and effectively implementing corrective and preventive actions and sharing lessons learned.
- **Quality Assurance**: Identification, development, and definition of quality requirements; interpretation and implementation of QA Program elements; review of quality-related procurements and performance of receipt inspections and vendor evaluations where appropriate; performance of assessments and audits.
- **Procurement**: Planning and preparation of procurements with the requisitioner; incorporation of project-specific safety requirements into subcontracts; submittal of relevant safety information to subcontractors; obtaining subcontractor safety qualifications for IS&H review; verifying subcontractor completion of training.
- **Business Management**: Financial resources; accounting; material and property control; procurement services. Planning and scheduling; integration of technical programs, program development, and program reporting; strategic planning and long-term budget development; performance analysis; work scope priority recommendation.
- **Human Resources (Training)**: Coordination of personnel-related functions supporting facility safety, operations, planning and implementing the employee technical training programs, and certification/qualification of operating staff.
- **Communications**: Public information programs, governmental affairs, technical outreach, and communications; visitor's program at the WIPP; identification and resolution of issues between WIPP and outside institutions.
- **Transportation**: External emergency management training provided to prepare emergency response personnel bordering the WIPP transportation routes and assist DOE with implementation; transportation of hazardous materials (HAZMAT) offsite.
- **National TRU Program Manager**: Direction of the day-to-day operations and activities of the Central Characterization Program (CCP) department ensuring operational integration with other NWP departments. Assure compliance with DOE Orders and directives related to retrieval, characterization, and transportation of TRU Waste.

Responsibilities and interfaces of operations and operating service organizations, including line management, are identified in program documents described in Chapters 6.0 through 18.0 of this DSA.

All personnel are responsible for identifying conditions adverse to safety. Safety concerns and near misses are reported using the WIPP form process described in WP 15-GM1002. This document implements the NWP issues management process, as described in Chapter 14.0.

17.3.3 Staffing and Qualifications

The WIPP management process for personnel selection, qualification, and training is conducted in accordance with DOE Order 426.2, resulting in trained and qualified personnel who can conduct plant operations in a safe and efficient manner. Facility staffing levels for normal day-to-day activities include management, administrative, maintenance, operations support, radiological control, and engineering personnel. Minimum staffing for TRU Waste Handling, including the ability to respond to potential accident environments, were evaluated in *Waste Isolation Pilot Plant Human Factors Evaluation* (WP 02-RP.03). The report concluded that "the facility staff is fully capable of accomplishing their responsibilities in potential accident environments involving the hazardous materials handled at the site." The *Emergency Management Emergency Response Organization Baseline Needs Assessment* (DOE/WIPP 11-3471) identifies the minimum resources necessary to respond to a fire and simultaneous medical emergency and options for implementation.

NWP has established required management training for designated NWP managers. The training requirements include (1) supervisory skills training (e.g., leadership, interpersonal communication, responsibility, and authority); and (2) management training (e.g., QA, emergency plans, facility modifications, environmental issues, and nuclear/industrial/radiation safety). The WIPP management and supervisor training qualifications are described in MP 1.40.

WP 09 specifies the training requirements for the WIPP site cognizant system engineers. Cognizant system engineering is defined by DOE Order 420.1C.

The WIPP Technical Training department has a Training Implementation Matrix as required by DOE Order 426.2. The Training Implementation Matrix defines the administration of qualification and training programs, and establishes the responsibility, authority, and methods for implementing those programs. The Training Implementation Matrix describes the operating organization, lists each position that is subject to DOE Order 426.2, and includes a matrix that shows the status of training and qualification programs relative to the requirements. Information related to specific operations and operating services personnel training is described in Chapters 6.0 through 11.0, 14.0, and 15.0 of this DSA. Details of training and qualification program development are described in Chapter 12.0.

Staff safety performance is evaluated through a combination of activities described in Section 17.4.1.

17.4 SAFETY MANAGEMENT POLICIES AND PROGRAMS

The Worker Safety and Health Program Description (WSHPD) (WP 15-GM.02) and the ISMS Description (WP 15-GM.03) identify the elements, methods, and processes by which NWP meets the requirements in 10 CFR 851 while integrating with the ISMS description and the NWP Voluntary Protection Program, thus serving as the overall foundational base program description for worker safety and health. The NWP overall safety program is based primarily on integrating safety into operations and focuses on continuous improvement, which results in a proactive safety culture.

The NWP safety and health policy and goals are described in MP 1.12 and MP 1.28.

The Environmental, Safety and Health Department, as the interpretive authority, is responsible for ensuring the NWP safety and health program meets the requirements of applicable safety and health regulations, DOE directives, and industry standards as described in MC 3.1.

17.4.1 Contractor Assurance System

The NWP Contractor Assurance System, administered by the NWP Contractor Assurance Organization, brings together the processes NWP uses to monitor and evaluate the content and implementation of WIPP Safety Management and Functional Area Programs. This ensures that the elements of these programs meet the applicable requirements (e.g., regulatory and contractual) for environmental, safety and health; QA; integrated safety management; safeguards and security; cyber security; and emergency management, as defined by Attachment 1, Contractor Requirements Document of DOE Order 226.1B, *Implementation of Department of Energy Oversight Policy*.

The Contractor Assurance System uses performance feedback and improvement programs to strengthen compliance and to promote continuous improvement in NWP's operation of the WIPP. This ensures that requirements are identified and flowed down into NWP procedures, performance is monitored and assessed, and corrective actions are initiated when areas requiring improvement are identified. Continuous feedback and improvement relative to safety, quality, and work execution are expected and supported; with performance summaries and lessons learned being captured and communicated to the NWP organization.

The Contractor Assurance System elements include the following:

- Directives Management.
- Regulatory Screening and Reporting.
- Assessments.
- Issues Management and Corrective Action.
- Performance Analysis, Trending, and Reporting.
- Lessons Learned and Continuous Feedback & Improvement.

QA processes, including independent audits, surveillances, and nonconformance reporting, along with the DOE Carlsbad Field Office (CBFO) field observations and NWP internal employee feedback (e.g., post-job reviews, employee concerns, and differing professional opinions) also provide essential insights into the health of both the Safety Management and Functional Area Programs and the effectiveness of their implementation.

17.4.2 Configuration Management

A rigorous configuration management program exists to ensure system configuration is maintained and confirm system changes do not impact the system's ability to provide design and safety functions. Design configuration management is described and implemented through the WP 09 series of procedures, which includes requirements for design of new SSCs, design modifications to existing SSCs, and development of associated design documentation, such as drawings and specifications. The program includes requirements for design review documentation, design verification, System Design Descriptions (SDDs), component labeling, as-built information, etc. Additional information concerning engineering design control is provided in Chapter 14.0.

The configuration management program implements the following elements as required by DOE Order 420.1C, particularly with regard to equipment identified in accordance with DOE Order 433.1B:

- Configuration management is used to develop and maintain consistency among system requirements and performance criteria.
- Configuration management integrates the elements of system requirements and performance criteria, system assessments, change control, work control, and documentation control.
- System design basis documentation and supporting documents are compiled and kept current using formal change control and work control processes, or when design basis information is not available, documentation includes:
  - system requirements and performance criteria essential to performance of the system's safety functions,
  - the basis for the system requirements, and
  - a description of how the current system configuration satisfies the requirements and performance criteria.
- Key design documents are identified and consolidated to support facility safety basis development and documentation.
- System maintenance and repair are controlled through a formal change control process to ensure that changes are not inadvertently introduced and that required system performance is not compromised.

17.4.3 Occurrence Reporting and Lessons Learned

The WIPP occurrence reporting process is described in WP 12-ES3918, and implements the requirements of DOE Order 232.2. The occurrence reporting procedure is used by the Facility Manager (the Operations Manager serves in this capacity) or his designee and the Facility Shift Manager (FSM) or his designee to categorize events that occur during any activities, projects, and operations. Occurrence reporting directives require that notifications be timely in accordance with the significance of the occurrence and that written reports contain appropriate information describing the occurrence, significance, causal factors, and corrective actions. Timely information is provided to the DOE for occurrences/events that could adversely affect WIPP programs or equipment or the health and safety of workers, the public, and the environment.

WP 12-ES3918 requires the event to be investigated to determine the causes and to develop corrective actions. Trending of occurrence report information is performed on a quarterly basis to determine whether there is a common causal factor, a series of causal factors, or contributing attributes that result in a recurring event.

The WIPP Lessons Learned Program was established as required by DOE Order 210.2A and is implemented by *Operating Experience / Lessons Learned Program* (WP 15-PA.01). The Lessons Learned Program promotes continuing improvement in plant safety and reliability. Lessons Learned Bulletins are developed from information obtained from DOE safety notices, external occurrence reports, internal occurrence reports, internal investigative reports, and other pertinent industry documents. Lessons Learned Bulletins are distributed to the WIPP project participants and are available in the WIPP Lessons Learned Alerts database for future reference.

17.4.4 Safety Culture

The WIPP mission is to dispose of TRU and TRU-Mixed Waste in an environmentally sound and safe manner. While accomplishing this mission, protection of the environment, the public, and the safety and health of employees is the number one priority for the conduct of operations. The management approach to occupational health and safety at WIPP emphasizes the integration of safety into all aspects of the WIPP facility. Senior management is visibly involved in safety and health programs by establishing goals, approving management policies, providing accountability mechanisms, implementing site tracking systems, participating in employee communications, reviewing injury/illness trends, reviewing safety and health summaries, and providing resources to perform jobs safely. The WIPP management has communicated its expectations of site personnel and subcontractors regarding safety through policies, programs, and procedures.

The NWP safety culture is developed and sustained using DOE Guide 450.4-1C Attachment 10, *Safety Culture Focus Areas and Associated Attributes.* NWP uses Safety Culture Improvement and Sustainment Plans to foster continuous improvement in the three main focus areas of Leadership, Employee/Worker Engagement, and Organizational Learning.

- Leadership:
  - NWP leadership demonstrates safety commitment by leading safety initiatives, management engagement, and time in the field and risk based conservative decision-making.
  - NWP leadership supports open communication and an environment free from retribution.
  - There are clear expectations and accountability at WIPP.
- Employee/Worker Engagement includes:
  - Expectation for personal commitment to everyone’s safety.
  - Demonstrated teamwork and mutual respect.
  - Participation in work planning and improvement.
  - Conducting work mindful of hazards and controls.
- Organizational Learning is demonstrated by:
  - NWP’s commitment to continuous learning through programs such as the Leadership Academy for First Line Supervisors and the Leaders’ Forum.
  - Expectations that align with NWP Core Values such as
    a. Expectation to report and learn from errors and problems.
    b. Expectation to help in effective resolution of reported problems.
    c. Expectation to have a questioning attitude.
  - Performance monitoring.
  - Use of lessons learned from multiple sources.

Because of its unique mission and configuration, NWP demonstrates a successful blending of mine safety and nuclear safety cultures. Applicable safety processes and programs are listed below.

Safety and health processes, such as policies, plans, procedures, walk-around inspections, planning meetings, job hazard analyses, critiques, and feedback meetings, are the means by which the safety

management functions are implemented and performed. Details regarding the specific processes implemented at WIPP to perform work safely are identified in WP 15-GM.02, DOE/CBFO 09-3442, and WP 15-GM.03.

The NWP safety programs incorporate the following WIPP programs and initiatives to promote safety and involve workers in facility safety, and ensure that workers understand the potential risks to the facility and fellow workers.

- **Integrated Safety Management System**: The ISMS description (DOE/CBFO 09-3442 and WP 15-GM.03) is the means by which worker safety and health requirements described by the NWP WSHPD are integrated into mission work activities performed by NWP.
- **Voluntary Protection Program**: Management and worker support is evidenced by the WIPP Voluntary Protection Program Merit recognition, which DOE recommended for WIPP after the February 2014 events. WIPP had initiated a large number of new processes and programs in its corrective actions with safety elements built into them. The programs were recognized as promising but many were still in the implementation process so a Merit status was recommended for NWP. Management and workers are committed to and working toward Voluntary Protection Program Star status.
- **Worker Safety and Health Program Description**: WP 15-GM.02, the NWP WSHPD, implements the specific requirements of 10 CFR 851, including identification of safety and health standards, baseline surveys to be conducted to ensure protection of workers, and occupational health requirements, as well as flow down to applicable subcontractors.
- **Job Hazard Analysis**: The job hazard analysis processes are described in WP 12-IS3002, *Job Hazard Analysis Performance and Development*.
- **Safety Awareness Committee Required by the Voluntary Protection Program and the Worker Protection Program**: This is the main safety committee created to promote employee involvement.
- **Nuclear Safety Culture Steering Team**: This team is responsible for monitoring and trending the health of WIPP's nuclear safety culture, and facilitating desired nuclear safety culture behaviors. The WIPP Nuclear Safety Culture Steering Team provides oversight of the nuclear safety culture improvement initiatives and sustained continuous improvement efforts, and is responsible for reviewing performance for cultural implications and determining what actions are to be taken based on their conclusions.

NWP uses the following guiding principles as the basis for WP 15-GM.03 and its daily operation:

- Line Management Responsibility for Safety.
- Clear Roles and Responsibilities.
- Competence Commensurate with Responsibilities.
- Balanced Priorities.
- Identification of Safety Standards and Requirements.
- Hazard Controls Tailored to Work Being Performed.
- Operations Authorization.

- Safety Culture Elements.
  - Leadership:
    - NWP leadership demonstrates safety commitment by leading safety initiatives, management engagement, and time in the field and risk based conservative decision-making.
    - NWP leadership supports open communication and an environment free from retribution.
    - There are clear expectations and accountability at WIPP.
  - Employee/Worker Engagement includes:
    - Expectation for personal commitment to everyone's safety.
    - Demonstrated teamwork and mutual respect.
    - Participation in work planning and improvement.
    - Conducting work mindful of hazards and controls.

A strong safety culture is a prerequisite and key to the effective integration of safety into all phases of work planning and execution. This core value of safety is fundamental to every work activity at WIPP and is the basis for the continued growth and strength of this safety culture.

17.5 REFERENCES

10 CFR 830, "Nuclear Safety Management," Subpart A, "Quality Assurance Requirements," *Code of Federal Regulations*. U.S. Government Printing Office, Washington, DC.

10 CFR 830, "Nuclear Safety Management," Section 830.203, "Unreviewed Safety Question Process," *Code of Federal Regulations*. U.S. Government Printing Office, Washington, DC.

10 CFR 851, "Worker Safety and Health Program," *Code of Federal Regulations*. U.S. Government Printing Office, Washington, DC.

29 CFR 1910, "Occupational Safety and Health Standards," *Code of Federal Regulations*. U.S. Government Printing Office, Washington, DC.

29 CFR 1926, "Safety and Health Regulations for Construction," *Code of Federal Regulations*. U.S. Government Printing Office, Washington, DC.

30 CFR 57, "Safety and Health Standards – Underground Metal and Nonmetal Mines," *Code of Federal Regulations*. U.S. Government Printing Office, Washington, DC.

48 CFR 970, "DOE Management and Operating Contracts," Section 970.5223-1, "Integration of Environment, Safety, and Health into Work Planning and Execution," *Code of Federal Regulations*. U.S. Government Printing Office, Washington, DC.

19.6.5 NMAC, "New Mexico Mine Safety Code for All Mines Including Open-Cut and Open-Pit," *New Mexico Administrative Code*.

DOE/CBFO 09-3442, *CBFO Integrated Safety Management System Description* (current revision), U.S. Department of Energy, Carlsbad Field Office, Carlsbad, NM.

DOE Guide 450.4-1C, *Integrated Safety Management System Guide*, September 29, 2011, U.S. Department of Energy, Washington, DC.

DOE Guide 450.4-1C, Attachment 10, *Safety Culture Focus Areas and Associated Attributes*, September 29, 2011, U. S. Department of Energy, Washington, DC.

DOE Order 210.2A. *DOE Corporate Operating Experience Program*, April 4, 2011, U.S. Department of Energy, Washington, DC.

DOE Order 225.1B, *Accident Investigations*, March 4, 2011, U.S. Department of Energy, Washington, DC.

DOE Order 226.1B, *Implementation of Department of Energy Oversight Policy*, April 25, 2011, U.S. Department of Energy, Washington, DC.

DOE Order 231.1B, *Environment, Safety, and Health Reporting*, June 27, 2011, U.S. Department of Energy, Washington, DC.

DOE Order 232.2, *Occurrence Reporting and Processing of Operations Information*, August 30, 2011, U.S. Department of Energy, Washington, DC.

DOE Order 414.1D, *Quality Assurance*, April 25, 2011, U.S. Department of Energy, Washington, DC.

DOE Order 420.1C, *Facility Safety*, Chapter III, "Nuclear Criticality Safety," December 13, 2012, U.S. Department of Energy, Washington, DC.

DOE Order 422.1, *Conduct of Operations Requirements*, June 29, 2010, U.S. Department of Energy, Washington, DC.

DOE Order 425.1D, *Verification of Readiness to Start Up or Restart Nuclear Facilities*, April 16, 2010, U.S. Department of Energy, Washington, DC.

DOE Order 426.2, *Personnel Selection, Training, Qualification, and Certification Requirements for DOE Nuclear Facilities*, April 21, 2010, U.S. Department of Energy, Washington, DC.

DOE Order 433.1B, *Maintenance Management Program for DOE Nuclear Facilities*, April 21, 2010, U.S. Department of Energy, Washington, DC.

DOE Policy 450.4A, *Integrated Safety Management Policy*, April 25, 2011, U.S. Department of Energy, Washington, DC.

DOE-STD-3009-94, CN3, *Preparation Guide for U.S. Department of Energy Nonreactor Nuclear Facility Documented Safety Analyses*, March 2006, U.S. Department of Energy, Washington, DC.

DOE-STD-3009-2014, *Preparation of Nonreactor Nuclear Facility Documented Safety Analysis*, November 2014, U.S. Department of Energy, Washington, DC.

DOE/WIPP 11-3471, *Emergency Management Emergency Response Organization Baseline Needs Assessment* (current revision), Nuclear Waste Partnership LLC, Carlsbad, NM.

MC 3.1, *Environmental Safety and Health Department* (current revision), Management Charter, Nuclear Waste Partnership LLC, Carlsbad, NM.

MP 1.12, *Worker Protection Policy* (current revision), Management Policy, Nuclear Waste Partnership LLC, Carlsbad, NM.

MP 1.28, *Integrated Safety Management* (current revision), Management Policy, Nuclear Waste Partnership LLC, Carlsbad, NM.

MP 1.40, *Management and Supervisor Training Qualifications* (current revision), Management Policy, Nuclear Waste Partnership LLC, Carlsbad, NM.

TIM, *Waste Isolation Pilot Plant Training Implementation Matrix* (current revision), Technical Training Department, Nuclear Waste Partnership LLC, Carlsbad, NM.

WP 02-AR3001, *Unreviewed Safety Question Determination* (current revision), Management Control Procedure, Nuclear Waste Partnership LLC, Carlsbad, NM.

WP 02-RP.03, *Waste Isolation Pilot Plant Human Factors Evaluation*; (current revision), Nuclear Waste Partnership LLC, Carlsbad, NM.

WP 09, *Engineering Conduct of Operations* (current revision), Nuclear Waste Partnership LLC, Carlsbad, NM.

WP 12-ES3918, *Reporting Occurrences in Accordance with DOE Order 232.2* (current revision), Management Control Procedure, Nuclear Waste Partnership LLC, Carlsbad, NM.

WP 12-IS.01-1, *Industrial Safety Program – Barricades and Barriers* (current revision), Nuclear Waste Partnership LLC, Carlsbad, NM.

WP 12-IS.01-6, *Industrial Safety Program – Visitor, Vendor, User, Tenant, and Subcontractor Safety Controls* (current revision), Nuclear Waste Partnership LLC, Carlsbad, NM.

WP 12-IS3002, *Job Hazard Analysis Performance and Development* (current revision), Nuclear Waste Partnership LLC, Carlsbad, NM.

WP 13-1, *Nuclear Waste Partnership LLC Quality Assurance Program Description* (current revision), Nuclear Waste Partnership LLC, Carlsbad, NM.

WP 15-CA1002, *Self-Assessment* (current revision), Nuclear Waste Partnership LLC, Carlsbad, NM.

WP 15-GM.02, *Worker Safety and Health Program Description* (current revision), Nuclear Waste Partnership LLC, Carlsbad, NM.

WP 15-GM.03, *Integrated Safety Management System Description* (current revision), Nuclear Waste Partnership LLC, Carlsbad, NM.

WP 15-GM.08, *Project Management Plan* (current revision), Nuclear Waste Partnership LLC, Carlsbad, NM.

WP 15-GM1002, *Issues Management Processing of WIPP Forms* (current revision), Nuclear Waste Partnership LLC, Carlsbad, NM.

WP 15-PA.01, *Operating Experience / Lessons Learned Program* (current revision), Nuclear Waste Partnership LLC, Carlsbad, NM.

WP 15-PA2000, *Lessons Learned Bulletin Development*, Nuclear Waste Partnership LLC, Carlsbad, NM.

WP 15-PS.01, *Procedures Program* (current revision), Nuclear Waste Partnership LLC, Carlsbad, NM.

WP 15-PS.2, *Procedure Writer's Guide* (current revision), Nuclear Waste Partnership LLC, Carlsbad, NM.

WP 15-PS3002, *Controlled Document Processing* (current revision), Management Control Procedure, Nuclear Waste Partnership LLC, Carlsbad, NM.

WP 15-RA.01, *Nuclear Safety and Worker Safety and Health Compliance Program* (current revision), Nuclear Waste Partnership LLC, Carlsbad, NM.

Table of Contents

18.0 WIPP WASTE ACCEPTANCE CRITERIA COMPLIANCE PROGRAM 18-1
18.1 Organizational Roles and Responsibilities 18-3
18.2 Transuranic Waste Acceptance Criteria for the Waste Isolation Pilot Plant (DOE/WIPP 02 3122) 18-4
18.3 WIPP Facility Waste Acceptance Criteria Compliance Program Description 18-5
18.4 WIPP Certified Programs 18-5
18.4.1 Program Certification / Recertification 18-5
18.4.2 Waste Certification 18-6
18.5 Prior to Authorizing Shipment 18-8
18.5.1 Waste Stream Profile Review and Approval Program (WP08-NT.03) 18-8
18.5.2 Review of Radiography Media for TRU Waste Confirmation (WP 02-RC1102) 18-8
18.5.3 Review of Visual Examination Records for TRU Waste Confirmation (WP 02-RC1108) 18-10
18.6 Upon Receipt at WIPP 18-11
18.7 At DOE Sites: Generator Site Technical Review 18-11
18.8 Previously Certified Waste Preclusion of Shipments 18-11
18.9 Key Elements 18-12
18.10 References 18-14

List of Figures

Figure 18.0-1. Regulatory Basis of WIPP Transuranic Waste Acceptance Criteria 18-2

This page intentionally left blank

18.0 WIPP WASTE ACCEPTANCE CRITERIA COMPLIANCE PROGRAM

This chapter addresses the Waste Isolation Pilot Plant (WIPP) Waste Acceptance Criteria (WAC) Compliance Program as it relates to facility safety per the U.S. Department of Energy (DOE) Standard DOE-STD-3009-2014, *Preparation Guide for U.S. Department of Energy Nonreactor Nuclear Facility Documented Safety Analyses*. The format of this chapter follows the guidance of DOE-STD-3009-2014 for the organization and content of Safety Management Programs (SMPs) Documented Safety Analysis (DSA) sections. The point-of-compliance for WIPP management and operating (M&O) contractor activities described in this chapter with regards to DSA compliance is prior to authorizing shipment to WIPP unless otherwise specified.

The WIPP WAC (DOE/WIPP 02-3122) serves as the Carlsbad Field Office (CBFO) summary directive for ensuring that CH and RH TRU Waste is managed and disposed of in a manner that protects the health and safety of workers, public and the quality of the environment. The Hazards Analysis of this DSA uses selected WAC requirements as Initial Conditions (ICs) in the analyses of postulated scenarios. For example, reviews of Non-Destructive Assay processes and implementation provide added assurance that fissile material is within limitations.

Figure 18.0-1 provides a pictorial representation of the flow down of WIPP requirements which provide the basis for the WIPP WAC.

The solid arrows shown in Figure 18.0-1 represent the flow-down of waste stream level and individual payload container-based requirements. The two dotted arrows shown in Figure 18.0-1 represent the flow-down of summary-level requirements only; the U.S. Nuclear Regulatory Commission (NRC) and the New Mexico Environment Department (NMED) regulatory documents provide a complete listing of the requirements. However, all requirements apply, even if not fully detailed in the WIPP WAC.

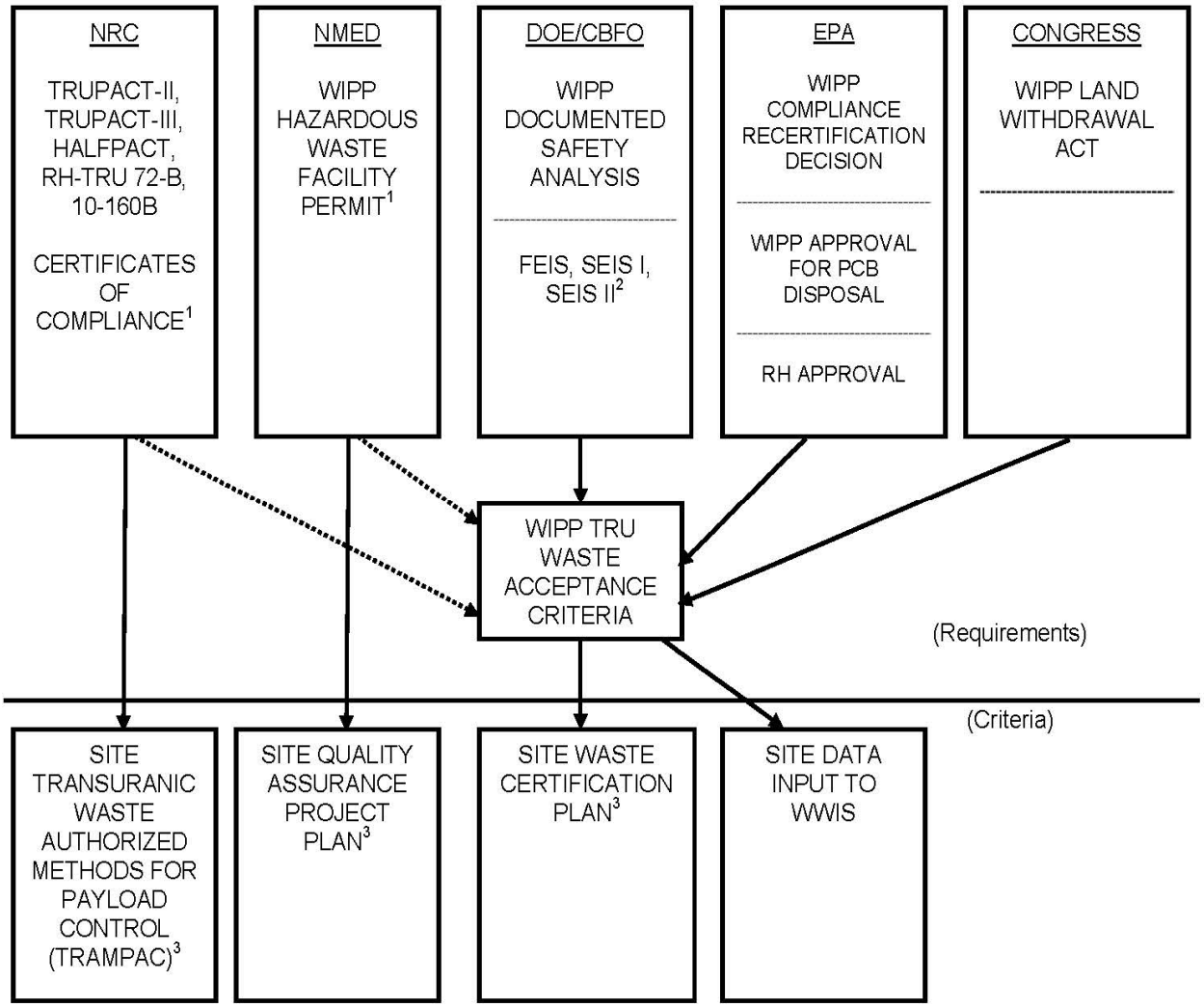

1 The TRUPACT-II, TRUPACT-III, and Remote Handled Authorized Methods for Payload Control (TRAMPACs) as referenced by the TRUPACT-II, TRUPACT-III, HalfPACT, and RH-TRU 72-B Certificates of Compliance, the Safety Analysis Report as referenced by the 10-160B Certificate of Compliance and the WIPP HWFP provide detailed requirements. The WIPP WAC provides only an overview of these requirements.
2 Final Environmental Impact Statement (FEIS) (DOE/EIS-0026), Supplemental Environmental Impact Statement (SEIS) (DOE/EIS-0026-FS).
3 All work performed by the site for the CBFO must be performed under an approved QA program. The site-specific TRAMPAC can be a separate document or can be embodied in the Site Waste Certification Plan. The Model 10-160B Safety Analysis Report does not require the preparation of a site-specific TRAMPAC. Instead, acceptable methods for payload compliance for the Model 10-160B package are implemented by an NRC-approved, site-specific appendix to the Model 10-160B Safety Analysis Report.

Figure 18.0-1. Regulatory Basis of WIPP Transuranic Waste Acceptance Criteria

18.1 ORGANIZATIONAL ROLES AND RESPONSIBILITIES

CBFO

- Owner of WIPP (Co-permittee).

  CBFO is primarily responsible for administration of the WIPP Management & Operating Contract and Management of the National TRU Program (NTP).

- Manages the NTP for DOE.

  CBFO NTP is responsible for communicating program requirements, approving implementing plans and procedures for the characterization and certification of TRU waste, overseeing the compliant implementation of approved plans and procedures by WIPP Certified Programs (see WIPP certified programs below), designating the DOE sites where the Central Characterization Program (CCP) will be placed and the inventories to be characterized and certified. (See Section 2.2 of the WIPP WAC.)

- Certifies WIPP characterization and transportation programs.

  The CBFO Manager is the certifying authority for WIPP certified programs (see WIPP certified programs below) with certification decisions based primarily on recommendations from NTP and the CBFO Quality Assurance Division. The CBFO Manager initiates memorandums of agreement with DOE sites regarding mutual interface and agreed upon requirements (including TRU waste repackaging and treatment requirements). These memorandums of agreement will include provisions for CBFO and WIPP M&O contractor oversight of DOE Site repackaging and treatment activities performed for WIPP acceptability.

- Quality Assurance (QA).

  CBFO QA provides independent oversight of CBFO and WIPP M&O contractor activities including those required to comply with the WIPP WAC by conducting audits, surveillances, and assessments. CBFO QA leads WIPP certification audits to evaluate the adequacy, implementation, and effectiveness of WIPP program requirements (including the WIPP WAC) as implemented through WIPP certified program plans (see WIPP certified programs below), procedures, and implementing actions. CBFO QA makes recommendations to the CBFO Manager to initially certify and annually recertify WIPP certified programs (see WIPP certified programs below).

- The CBFO owns the WIPP WAC and has the main authority and responsibility within DOE for TRU Waste disposal.

WIPP M&O Contractor

- Operator of WIPP (Co-permittee).

  Responsible for all operations at the WIPP, and for characterization, integration, and disposal of designated waste for the CBFO NTP as the functional manager of the CCP by site.

- Authorizes release of each shipment through the Waste Data System (WDS).

- QA.

  Implements and maintains a QA Program in accordance with the quality assurance provisions of 40 CFR194, and that implements the quality program requirements contained in the CBFO Quality Assurance Program Document. The M&O contractor QA conducts audits, surveillances,

and assessments of work performed pursuant to the WIPP Management & Operating Contract including waste characterization and certification activities performed by the CCP by site to plans and procedures approved by the CBFO NTP and CBFO QA.

WIPP Certified Programs (CCP by site and Contractor for the Idaho Advanced Mixed Waste Treatment Project (AMWTP))

- Certifies TRU waste containers to meet the WIPP WAC disposal requirements prior to seeking shipment authorization.
- Certifies waste containers meet the applicable TRAMPAC and NRC Certificate of Compliance (CCP by site only).
- Approves the Interface Waste Management Documents List (IWMDL), including changes to the list. Concurs on changes to the procedures on the list prior to shipment of waste containers certified under the subject change.

DOE Sites

- Manages TRU waste including packaging, repackaging, and treatment in accordance with site-specific contracts and included DOE Orders, implements conditions agreed to in memorandum of agreement between the CBFO Manager and the DOE site.
- Transfers TRU waste to the WIPP certified program for characterization and certification.

DOE Headquarters

- Provides policy, guidance, and oversight for DOE EM sites, facilities, and operations.

18.2 TRANSURANIC WASTE ACCEPTANCE CRITERIA FOR THE WASTE ISOLATION PILOT PLANT (DOE/WIPP 02 3122).

The governing document for the WAC Compliance Program is the WIPP WAC.

The WIPP WAC summarizes individual and the most restrictive overlapping conditions, limitations, and prohibitions flowed down from the WIPP program requirements documents.

The WIPP WAC is a CBFO controlled document that identifies:

- The responsible organizations and associated activities for ensuring that the TRU Waste is managed in a manner that protects human health and safety and the environment;
- The authorization basis of the CH requirements and lists the associated WIPP WAC relating to the physical, chemical, and radiological attributes of the waste, as well as the properties of the applicable payload containers and packages; and
- The authorization basis of the RH requirements and lists the associated WIPP WAC relating to the physical, chemical, and radiological attributes of the waste, as well as the properties of the applicable payload containers and packages.

Supplemental information relating to radioassay (Appendix A, “Radioassay Requirements for Contact-Handled Transuranic Waste”) and radiotoxic inhalation hazard analyses (Appendix B, “^{239}Pu Equivalent Activity”) are also provided in the WIPP WAC. Appendix C, “Glossary,” provides definitions for terms

used in the document. Appendix D, “Payload Container Integrity Checklist,” addresses the visual inspection requirements and compliance criteria for determining if CH and RH payload containers meet the WIPP WAC requirements. Appendix E, “Payload Management of TRU Alpha Activity Concentration,” describes the policy and implementation methods for the payload management of TRU alpha activity concentration when overpacking Waste Containers. Appendices F, “Radiography Requirements for Contact-Handled Transuranic Waste,” and Appendix G, “Visual Examination Requirements for Contact-Handled Transuranic Waste for EPA Compliance,” provide the radiography and visual examination requirements relating to the EPA’s physical characterization requirements for CH Waste.

18.3 WIPP FACILITY WASTE ACCEPTANCE CRITERIA COMPLIANCE PROGRAM DESCRIPTION

The WIPP M&O contractor has a limited number of activities which support WIPP WAC compliance given the program requirements that all Waste Containers must be certified as meeting the WIPP WAC prior to shipment to WIPP. Waste Containers are restricted from being opened for examination of the contents or repackaging at WIPP. The WIPP M&O contractor is provided oversight opportunities at DOE sites through memorandums of agreement between the CBFO Manager and the DOE sites.

The requirements relating to waste characterization, certification, and transportation are summarized in the WIPP WAC. Certified programs must develop and implement a QA program that meets applicable requirements of the CBFO *Quality Assurance Program Document* (QAPD) and is approved and verified through certification audits conducted by CBFO. Characterization of TRU Waste must be in accordance with the performance requirements of the *WIPP Waste Analysis Plan*, the *Waste Characterization Program Implementation Plan* and the WIPP WAC, and implemented in accordance with a site-specific *Quality Assurance Project Plan*. However, the WIPP WAC is the document which conveys the DSA requirements. Certification of payload containers for shipment by certified programs in the TRUPACT-II, TRUPACT-III, HalfPACT, RH-TRU 72-B, or 10-160B are performed under a CBFO-approved QA program that provides confidence that the requirements for the transportation system have been met. The certified programs must develop and maintain procedures for characterizing and certifying TRU waste for shipping and disposal that flow down the requirements from the WIPP WAC into their Site Waste Certification Plans to maintain certification from CBFO. Non-administrative changes to these procedures shall be submitted to CBFO for review and approval prior to implementation.

18.4 WIPP CERTIFIED PROGRAMS

18.4.1 Program Certification / Recertification

The Certified Programs (CCP by site and the contractor for the AMWTP) undergo initial certification and annual recertification audits conducted by the CBFO. The WIPP M&O contractor functionally manages the CCP for the CBFO National TRU Program.

The CBFO certification/recertification process includes:

- Review, approve, and audit program documents.
- Review, approve, and audit procedures.
- Audit personnel qualification.
- Audit Equipment Calibration.

- Performance Demonstration Program (PDP) for NDA.
- Audit waste characterization activities and data validation and verification.
- New Mexico Environment Department (NMED) approval of the audit report.
- Environmental Protection Agency (EPA) concurrence of certification.
- CBFO manager approval.

These audits are performed to verify the adequacy of procedures reflecting program requirements (compliance), implementation of the procedure (procedure adherence), and the effectiveness of procedure implementation (desired result) when applied to populations of TRU waste within the scope of the audits.

18.4.2 Waste Certification

The CCP by site and the contractor for the AMWTP at the Idaho National Laboratory manage their respective Certified Programs by performing the following:

- Acceptable Knowledge (AK) by waste stream.
  - Enhanced AK and enhanced chemical compatibility (see section 18.4.2.1).
- Nondestructive Examination to verify waste container contents match AK using RTR or Visual Examination.
- Nondestructive Assay, Dose-to-Curie, or sampling and radiochemistry for radiological properties.
- Flammable Gas Analysis for transportation (CCP by site only).
- Validation of data from processes listed above.
- Waste Certification.
- Waste container integrity inspection.
- Waste Data System input:
  - Validates WIPP WAC MAR, fissile material, and non-fissile material limits are not exceeded.
- Transportation Certification (CCP by site only).

The WIPP WAC quantitative and qualitative conditions, limitations, and prohibitions flow down to the Certified Programs Waste Certification Plans. These conditions, limitations, and prohibitions flow from the Waste Certification Plans to the implementing procedures. Effective implementation of Certified Program procedures by trained and qualified personnel ensures compliance with the WIPP WAC. The Certified Programs must certify the CH and RH TRU waste payload containers meet the requirements of the Certified Programs' Program Documents, including the Waste Certification Plans, before that waste can be transported to, managed at, and disposed of in the WIPP underground disposal units. The collective information obtained from AK, waste characterization records, and other required waste characterization data serves as the information basis for the certification decision.

Several new activities and process enhancements were established after the 2014 Radiological Release Event. These are discussed in detail below.

18.4.2.1 Enhanced Acceptable Knowledge

18.4.2.1.1 Interface Waste Management Documents List

The IWMDL, which is generated by the Certified Program, identifies DOE Site plans, procedures, and reports associated with current waste management and packaging (e.g., waste management, waste generation, waste treatment, waste packaging, waste repackaging, waste remediation, waste stream delineation, and waste characterization procedures) to be reviewed before containers are added to the Waste Containers List or Container Tracking Spreadsheet in order to continue characterization activities. TRU waste will not be provided to the Certified Program until the IWMDL is updated with the latest version of the procedure.

Procedure verification will include the review of waste management and packaging activities performed under the procedures listed on the IWMDL. This “walk down” for the initial list of documents included in the list, and new procedures added to the list, will involve observing the performance of procedural steps implemented by the DOE Site relating to the management of prohibited items, including potentially reactive, corrosive, ignitable, and incompatible TRU waste materials. Subsequent revisions to documents on the list will be reviewed by the AK Expert. Changes affecting waste management or packaging will be verified with the cognizant points of contact and/or SMEs on the IWMDL.

The IWMDL, including changes to the list, will be approved by the Certified Program. Changes to procedures on the list will be concurred upon by the Certified Program prior to shipment of waste containers certified under the subject change.

18.4.2.1.2 Certified Program Enhanced Chemical Compatibility Evaluation

As part of the process for characterizing and certifying TRU waste for disposal at WIPP, it is necessary to consider the range of possible chemical combinations that could occur in each waste stream. Potential adverse chemical reactions (e.g., generation of heat, fire, explosion, or toxic fumes) that stem from combining potentially incompatible chemicals must be evaluated to support safe and compliant waste management. To expand upon this evaluation, chemical compatibility has been enhanced to require formal documentation and generation of a chemical compatibility evaluation memo (CCEM) for the waste stream, or sub-population of the waste stream, as needed. The CCEMs are written by the Certified Programs using procedural requirements based on the method described in the 1980 EPA method EPA-600/2-80-076, “A Method for Determining the Compatibility of Hazardous Wastes” (EPA Method). The CCEM will document and communicate the evaluation including the conclusions. CCEMs concluding the potential for chemical incompatibility will provide the basis for placing an administrative hold on the affected waste via issuance of a nonconformance report (NCR). CCEMs concluding the potential for chemical incompatibility are provided to the CBFO for information only. CCEMs concluding that the waste is acceptable are provided to CBFO for formal review and approval.

18.4.2.1.3 Basis of Knowledge for Evaluating Oxidizing Chemicals in TRU Waste

The Basis of Knowledge Document will be provided by CBFO and implemented in conjunction with the AK procedures of the Certified Programs. The Basis of Knowledge Document will specify when waste with oxidizing chemicals is acceptable as is, or when treatment will be required along with the treatment that must be performed.

18.4.2.1.4 Certified Program Acceptable Knowledge Assessments

To ensure that the AK documentation relating to the management of potentially reactive, corrosive, ignitable, and incompatible TRU waste materials is adequate, current, and accurately described in existing AK Summary Reports, a onetime AK assessment will be performed for waste streams having a currently certified container in a waste stream that has a population of unshipped containers. New AK Summary Reports and the supporting documentation must address all of the evaluation parameters described in this section or an AK assessment must be performed.

18.5 PRIOR TO AUTHORIZING SHIPMENT

The WIPP M&O Contractor performs the following WIPP WAC compliance activities to include verification of approved Waste Stream Profiles, confirmation of Radiography Media, and confirmation of Visual Examination Records.

18.5.1 Waste Stream Profile Review and Approval Program (WP08-NT.03)

The document summarizes the applicable requirements and criteria for the WIPP review and approval of Waste Stream Profile Forms (WSPFs) that are prepared by the DOE TRU Waste Certified Programs and submitted to each Co-Permittee for approval. Each WSPF and accompanying Characterization Information Summary (CIS), herein referred jointly as the WSPF, submitted for approval must meet the applicable requirements described in the Hazardous Waste Facility Permit (HWFP) Waste Analysis Plan (WAP) and the WIPP WAC.

Characterization requirements for individual containers of TRU mixed waste are specified on a waste stream basis. Each WSPF is reviewed to verify that the information provided is complete and accurate, and that the waste stream complies with the WIPP WAC and the WAP prior to approval. Upon written notification of approval of the WSPF by each Co-Permittee, the DOE Site is authorized to ship waste containers from the approved waste stream to WIPP.

Upon receipt of the Co-Permittees' approval letter for the waste stream, the WIPP M&O Contractor Data Administrator (DA) enters the approval date into the WSPF Administrative Table, which causes the WDS database to recognize the approved waste stream profile number. This allows the DOE Site WDS user to submit certification data to the WDS for waste containers from the approved waste stream and subsequently allows DA approval of certified container data prior to shipment of containers from the approved waste stream. Changes that could affect data quality (e.g., addition of EPA hazardous waste numbers, significant changes to the characterization information summary) must be submitted as a new revision to the approved WSPF and undergo the same review and approval as the original package.

18.5.2 Review of Radiography Media for TRU Waste Confirmation (WP 02-RC1102)

This procedure provides instructions for the review of Certified Programs' real-time radiography (RTR) audio/video tapes or recording media and radiographic data forms in order to meet the Hazardous Waste Facility Permit (HWFP) requirement for confirmation of certified waste prior to shipment to the WIPP from the DOE site.

Confirmation is completed on seven percent of the certified waste containers in each waste stream shipment which have been randomly selected via the TRU Waste Confirmation Module Report in the WDS for waste confirmation. Certified Programs provide the RTR media, data forms (Batch Data

Reports), and Nonconformance Reports (if applicable) for those containers. Confirmation includes a WIPP M&O Contractor initial review to ensure:

- Hazardous Waste Numbers listed on the container data report(s) and associated WSPFs are acceptable at the WIPP per the HWFP.
- The absence of prohibited items.
- The physical form (Summary Category Group) of the waste is consistent with the waste stream description and the Waste Matrix Code (debris, homogenous solids, and soil/gravel) documented on the WSPF.
- Nonconformance report(s) have been dispositioned.
- RTR data sheets and media are complete.

Subsequent to the initial review, a WIPP M&O Contractor Independent Observation (IO) will be completed. The IO review includes the RTR media, data packages, and all forms related to the selected containers

Subsequent to the initial review and IO, each container selected for confirmation will undergo a WIPP M&O Contractor Independent Technical Review (ITR) which ensures:

- Data generation and reduction were conducted in a technically correct manner in accordance with the methods used.
- Data were reported in the proper units and numbers of significant figures.
- Media is complete, if applicable.
- Data have been reviewed for transcription errors.
- DOE Site RTR video and audio media recording were reviewed (IO) on a waste container basis at a minimum of once per Batch Data Report or once per day of operation, whichever is less frequent. The RTR video/audio recording was reviewed against the data reported on the RTR form to ensure that the data are correct and complete.
- If review of RTR scans recorded by the DOE Site was used to perform confirmation, two IOs were performed for each shipment or two IOs per day, whichever is less frequent.

Following ITR, a WIPP M&O Contractor independent Permittees Confirmation Representative (PCR) review is completed to ensure:

- The data are technically reasonable based on the technique used.
- The data have received independent technical review.
- The data indicates that the waste examined contained no ignitable, corrosive, or reactive waste and that the physical form of the waste was consistent with the waste stream description in the WSPF.
- The data meets the established Quality Assurance Objectives.

Following subsequent review and approval by the DOE management representative, the WIPP M&O Contractor PCR confirms the shipment and notifies the DOE Site that the confirmation process is complete and the waste can be shipped to the WIPP site.

18.5.3 Review of Visual Examination Records for TRU Waste Confirmation (WP 02-RC1108)

This procedure provides instructions for the review of DOE Site visual examination audio/video tapes or recording media and/or visual examination data forms. This procedure has been prepared to meet the Hazardous Waste Facility Permit (HWFP) requirement for confirmation of certified waste prior to shipment to the Waste Isolation Pilot Plant (WIPP) from the DOE Sites.

Confirmation is completed on seven percent of the certified waste containers in each waste stream shipment which have been randomly selected via the TRU Waste Confirmation Module Report in the WDS for waste confirmation. DOE Sites provide the visual examination media, data forms (Batch Data Reports), and Nonconformance Reports (if applicable) for those containers. Confirmation includes a WIPP M&O Contractor initial review to ensure:

- Hazardous Waste Numbers listed on the container data report(s) and associated WSPFs are acceptable at the WIPP per the HWFP.
- The absence of prohibited items.
- The physical form (Summary Category Group) of the waste is consistent with the waste stream description and the Waste Matrix Code (debris, homogenous solids, and soil/gravel) documented on the WSPF.
- Nonconformance Report(s) have been dispositioned.
- Visual examination data sheets and, if applicable, media are complete and accurate.

Subsequent to the initial review, each container selected for confirmation will undergo review by a WIPP M&O Contractor ITR which ensures:

- Data generation and reduction were conducted in a technically correct manner in accordance with the methods used.
- Data were reported in the proper units and numbers of significant figures.
- Media is complete, if applicable.
- Data have been reviewed for transcription errors.

A third review by a WIPP M&O Contractor independent PCR is completed to ensure:

- The data are technically reasonable based on the technique used.
- The data have received independent technical review.
- The data indicates that the waste examined contained no ignitable, corrosive, or reactive waste and that the physical form of the waste was consistent with the waste stream description in the WSPF.
- The data meets the established Quality Assurance Objectives.

Following subsequent review and approval by the DOE management representative, the WIPP M&O Contractor PCR confirms the shipment and notifies the DOE site that the confirmation process is complete and the waste can be shipped to the WIPP site.

18.6 UPON RECEIPT AT WIPP

WIPP M&O Contractor trained and qualified personnel perform a Technical Safety Requirement (TSR) Surveillance Requirement (SR) to ensure the Shipping Manifest is consistent with the WDS prior to waste container removal from its shipping package. Upon removal of waste containers from shipping packages in the Waste Handling Building, WIPP M&O Contractor personnel conduct visual SRs to evaluate for potential non-compliant containers (e.g., structural defects, improper container configuration, discoloration, radiological contamination, etc.) and/or indications of pressurization. Identified package/container non-compliances are addressed in accordance with the associated Limiting Condition for Operation's Required Action(s). Additionally, the WIPP M&O Contractor tracks the position of each container in the event that a DOE Site later advises of a potential WIPP WAC non-compliance.

WIPP's Unreviewed Safety Question Determination and Suspect Container Response Program (TSR 3/4.7) are maintained to provide a structured way to resolve any potential non-compliances with the WIPP WAC. In the event that a potential noncompliant payload and/or container is determined to be of concern, LCO 3.7.1 is entered, initiating a process for resolution or development of a response plan. In the event that the potential non-compliance is determined to create a situation outside the safety basis, the Unreviewed Safety Question (USQ) / Potentially Inadequate Safety Analyses (PISA) process is entered. Waste discrepancies are divided into three categories that determine the course of action required. These are non-reportable discrepancies, reportable discrepancies, and significant manifest discrepancies. If a noncompliant or potentially noncompliant payload and/or container(s) is/are identified, the payload and/or container(s) must be properly identified, posted, and not downloaded to the Underground (UG) until the LCO 3.7.1 requirements are met.

18.7 AT DOE SITES: GENERATOR SITE TECHNICAL REVIEW

The WIPP M&O Contractor performs Generator Site Technical Reviews, which are reviews of DOE Sites' and Certified Programs' implementation of WIPP requirements (excluding DOE activities). These reviews are stand-alone reviews/evaluations independent of those performed by other organizations (e.g., CBFO, NTP, CBFO Quality Assurance, Certified Programs, DOE-HQ, etc.) The Generator Site Technical Review Program ensures that necessary and sufficient processes and procedures are in place and implemented to assure WIPP WAC compliant waste containers. Cognizant personnel from the WIPP M&O Contractor complete programmatic assessments of the sufficiency and implementation of the DOE Site's packaging and treatment and certified programs with regard to their required performance to assure WIPP WAC implementation.

The Generator Site Technical Review provides the detail on DOE Sites' programs and program implementation (including changes to existing procedures and processes) to assure that any deficiencies similar to the ones preceding the February 2014 release are detected and noncompliant shipments avoided.

18.8 PREVIOUSLY CERTIFIED WASTE PRECLUSION OF SHIPMENTS

To ensure that waste certified prior to the implementation of DSA Revision 5b are subject to adequate reviews prior to shipment to WIPP, the following actions have occurred:

- All payloads previously virtually built in the payload module of WDS have been removed.
- The packaging table in WDS has been coded as read only. This will prevent any new payloads from being finalized in WDS application. This is a temporary measure in place until a permanent

modification to the WDS is implemented to delineate all the checks listed in the section below. The packaging table in WDS will be turned back on to allow for payloads to be built for final approval.

All currently certified waste containers in the complex as well as those containers continuing to be certified will undergo the following prior to shipment:

- Certified Program will implement an enhanced AK process including an enhanced chemical compatibility evaluation for the waste streams, or waste stream sub-populations, and submits to CBFO for review.
- Certified Programs will implement the Basis of Knowledge document in the AK process for evaluating oxidizing chemicals in TRU waste streams to determine acceptability or need for treatment.
- CBFO will concur with enhanced chemical compatibility evaluation and implementation of the Basis of Knowledge for the evaluated waste stream.
- CBFO will approve waste streams with acceptable enhanced chemical compatibility evaluation documentation provided by the Certified Programs.
- WIPP M&O Contractor Payload Engineers will evaluate TRUCON codes to ensure compliance with the enhanced chemical compatibility evaluation.
- The WIPP M&O Contractor will implement additional checks in the WDS for each container before those containers can be used to populate payloads in WDS.
- The WIPP M&O Contractor will obtain written approval from CBFO prior to release of waste streams for shipment.
- The WIPP M&O Contractor will verify each container requested is part of a CBFO-approved waste stream and authorizes shipment in WDS.

Waste containers residing in WIPP's Waste Handling Building prior to DSA Revision 5b approval and implementation had been certified and received at WIPP prior to the February 2014 event. This waste will undergo the same enhanced chemical compatibility evaluation described above. Waste determined to be subject to the Basis of Knowledge cannot be emplaced prior to implementation.

Waste containers in the Waste Handling Building may not be emplaced without written authorization from CBFO.

18.9 KEY ELEMENTS

The WIPP WAC Compliance Program requires the participation of multiple organizations; however, the following Key Elements (KEs) are aspects of the Program which are performed by the WIPP M&O Contractor.

- **KE 18-1**: The WIPP M&O Contractor verifies each container is part of an approved waste stream with the enhanced Acceptable Knowledge process prior to authorizing shipment in WDS.

  Basis for selection: This KE aids in ensuring all TRU waste containers are compliant with the WIPP WAC prior to being authorized for shipment in order to implement the initial conditions and assumptions of the safety analysis as to the nature, quantity, and confinement of TRU Waste at WIPP.

- **KE 18-2**: The WIPP M&O Contractor reviews approved WSPFs to verify the information provided is complete and accurate, and that the waste stream complies with Hazardous Waste Facility Permit (HWFP) Waste Analysis Plan (WAP) and the WIPP Waste Acceptance Criteria (WAC) (DOE/WIPP 02-3122, *Transuranic Waste Acceptance Criteria for the Waste Isolation Pilot Plant*) prior to authorization for shipment.

  Basis for selection: This KE aids in ensuring individual waste containers are specified on a waste stream basis which has been verified to be complete, accurate, and compliant with WIPP WAC and WAP prior to authorizing shipment in order to implement the initial conditions and assumptions of the safety analysis.

- **KE 18-3**: The WIPP M&O Contractor verifies the HWFP requirement for confirmation of certified waste prior to shipment to the WIPP from the DOE Sites.

  Basis for selection: This KE aids in ensuring waste containers do not contain prohibited waste (e.g., ignitable, corrosive, reactive waste) and that the physical form is consistent with the waste stream description in order to implement the initial conditions and assumptions of the safety analysis through the review of radiography and visual examination media as applicable

- **KE 18-4**: The WIPP M&O Contractor performs Generator Site Technical Reviews, which are reviews of DOE Sites' and Certified Programs' implementation of WIPP requirements (excluding DOE activities).

  Basis for selection: This KE aids in ensuring WIPP WAC compliance by confirming the ability of the Certified Programs to ensure noncompliant materials are not present in waste containers, limit the quantity of individual waste container material at risk (MAR), and ensure individual waste container fissile material (i.e., FGE) is within mass limits in order to implement the initial conditions and assumptions of the safety analysis.

- **KE 18-5:** The MAR statistics for waste certified for future shipment to WIPP are reviewed periodically by the WIPP M&O Contractor (no less frequently than annually) to ensure the values stated in Tables 3.4-1 and 3.4-2 (based on DOE-STD-5506 statistical analysis methodology) continue to provide conservative, unmitigated consequences in the Safety Analysis; further, each payload proposed for shipment to WIPP is additionally screened to ensure handling and emplacement of small groupings of containers will remain bounded by the Safety Analysis.

  Basis for selection: The MAR statistics in Tables 3.4-1 and 3.4-2 are based on a conservative subset of DOE Complex waste remaining to be disposed at WIPP. This distinctly high MAR subset is chosen as the primary means of ensuring that actual shipments and subsequent waste emplacements will pose accident risks bounded by the analysis in a manner consistent with the MAR methodology prescribed in DOE-STD-5506-2007. This KE specifies two additional checks to confirm the continued conservatism of the MAR algorithm as applied for multi-container events. Action is taken, as necessary, should a potential non-conservatism be identified. The rationale for these checks is as follows:

  - The first check requires the development of comparable MAR statistics for the existing backlog of unshipped certified waste packages to confirm that packaging practice over time does not deviate significantly from prior experience. The summary statistics for the to-go subset are to be compared with the MAR statistics in Tables 3.4-1 and 3.4-2 and no change is required provided the tabulated values remain bounding for the Waste Containers to be received from the DOE Sites and emplaced at WIPP. The intent of this check is to ensure the overall statistical analysis conducted per DOE-STD-5506 when completing the safety analysis remains valid and bounding by identifying any trend of

increasing MAR far enough in advance to enable WIPP to plan to accommodate it (e.g., via a safety basis change).

– The second check focuses on individual payloads proposed for shipment to WIPP. The intent of this check is to ensure that local groupings of high MAR containers remain bounded by the Safety Analysis (i.e., if involved in a postulated accident, these localized groupings would not produce a higher source term than analyzed in Safety Analysis consequence calculations.) The evaluation will address the potential for unintentional MAR concentration during waste handling and emplacement with particular attention paid to any high MAR sub-population. If necessary, a strategy is developed and implemented to ensure Safety Analysis assumptions remain bounding.

18.10 REFERENCES

40 CFR Part 761. “Polychlorinated Biphenyls (PCBs) Manufacturing, Processing, Distribution in Commerce, and Use Prohibitions.” *Code of Federal Regulations*, Washington, DC, Office of the Federal Register, National Archives and Records Administration.

69 FR 39456. “Revision to the Record of Decision for the Department of Energy’s Waste Isolation Pilot Plant Disposal Phase.” *Federal Register* 69: 39456-39459, June 30, 2004, Department of Energy, Washington, DC.

75 FR 70584. “Criteria for the Certification and Recertification of the Waste Isolation Pilot Plant’s Compliance with the Disposal Regulations: Recertification Decision: EPA Final Rule.” *Federal Register* 75: 70584-70595, November 18, 2010, Radiation Protection Division, Washington, DC.

CCP-PO-001, CCP *Transuranic Waste Characterization Quality Assurance Project Plan* (current revision), NWP, Carlsbad, NM.

CCP-PO-002, *CCP Transuranic Waste Certification Plan* (current revision), NWP, Carlsbad, NM.

DOE/CBFO 12-3491, *National TRU Waste Management Plan* (current revision), U.S. Department of Energy, Carlsbad Field Office, Carlsbad, NM.

DOE/EIS-0026, 1980. *Final Environmental Impact Statement for the Waste Isolation Pilot Plant*, October 1980, Washington, DC, U.S. Department of Energy.

DOE/EIS-0026-FS, 1990. *Final Supplemental Environmental Impact Statement for the Waste Isolation Pilot Plant*, January, Washington, DC.

DOE STD 3009 2014, *Preparation Guide for U.S. Department of Energy Nonreactor Nuclear Facility Documented Safety Analyses*, November 2014, U.S. Department of Energy, Washington, DC.

DOE/WIPP 02-3122, *Transuranic Waste Acceptance Criteria for the Waste Isolation Pilot Plant* (current revision), U.S. Department of Energy, Carlsbad Field Office, Carlsbad, NM.

HWFP, *Waste Isolation Pilot Plant Hazardous Waste Facility Permit*, NM4890139088-TSDF (current revision), New Mexico Environment Department, Santa Fe, NM.

Public Law 94-580, 90 Stat. 2795. *Resource Conservation and Recovery Act of 1976*.

Public Law 96-164, 93 Stat. 1259. *National Security and Military Applications of Nuclear Energy Authorization Act of 1980*, Section 218(a).

Public Law 102-579, 106 Stat. 4777, 1992 (as amended by Public Law 104-201, 1996). *Waste Isolation Pilot Plant Land Withdrawal Act.*

Safety Analysis Report for Model 10-160B Type B Radwaste Shipping Cask. NRC-Docket No. 71-9204. Office of Regulatory Procedures, U.S. Nuclear Regulatory Commission, Washington, DC.

U.S. Department of Energy. *Quality Assurance Program Document*. DOE/CBFO-94-1012. Carlsbad, New Mexico, Carlsbad Field Office, U.S. Department of Energy.

U.S. Department of Energy. *Remote-Handled TRU Waste Characterization Program Implementation Plan.* DOE/WIPP-02-3214. Carlsbad, New Mexico, Carlsbad Field Office, U.S. Department of Energy.

U.S. Department of Energy. *Waste Isolation Pilot Plant Initial Report for PCB Disposal Authorization*. DOE/WIPP 02-3196. Carlsbad, New Mexico, Carlsbad Field Office, U.S. Department of Energy.

U.S. Environmental Protection Agency, Letter and enclosed *Conditions of Approval* from Carl E. Edlund (Director, Multimedia Planning and Permitting Division, EPA) to Edward Ziemianski, Acting Manager, Carlsbad Field Office, DOE, dated January 5, 2011, granting approval for WIPP to dispose of TRU and TRU-mixed wastes containing PCBs.

U.S. Environmental Protection Agency, Letter and Enclosures from Frank Marcinowski (Director, Radiation Protection Division), to R. Paul Detwiler (Acting Manager, Carlsbad Field Office), dated March 26, 2004.

U.S. Nuclear Regulatory Commission. TRUPACT-II *Certificate of Compliance.* NRC Docket No. 71-9218. Washington, D.C., Office of Regulatory Procedures, U.S. Nuclear Regulatory Commission.

U.S. Nuclear Regulatory Commission. TRUPACT-III *Certificate of Compliance*. NRC Docket No. 71-9305. Washington, D.C., Office of Regulatory Procedures, U.S. Nuclear Regulatory Commission.

U. S. Nuclear Regulatory Commission. HalfPACT *Certificate of Compliance.* NRC Docket No. 71-9279. Washington, D.C., Office of Regulatory Procedures, U.S. Nuclear Regulatory Commission.

U.S. Nuclear Regulatory Commission. RH-TRU 72-B *Certificate of Compliance*. NRC Docket No. 71-9212. Office of Regulatory Procedures, U.S. Nuclear Regulatory Commission, Washington, DC.

U.S. Nuclear Regulatory Commission. 10-160B *Certificate of Compliance*. NRC Docket No. 71-9204. Office of Regulatory Procedures, U.S. Nuclear Regulatory Commission, Washington, DC.

WP 08-NT.03, *Waste Stream Profile Review and Approval Program* (current revision), Nuclear Waste Partnership LLC, Carlsbad, NM.

WP 13-1, *Nuclear Waste Partnership LLC Quality Assurance Program Description* (current revision), Nuclear Waste Partnership LLC, Carlsbad, NM.

WP 02-RC1102, *Review of Radiography Media for TRU Waste Confirmation* (current revision), Nuclear Waste Partnership LLC, Carlsbad, NM.

WP 02-RC1108, *Review of Visual Examination Records for TRU Waste Confirmation* (current revision), Nuclear Waste Partnership LLC, Carlsbad, NM.