Waste Isolation Pilot Plant

Remote-Handled (RH) Waste Preliminary Safety Analysis Report

DOE/WIPP 03-3174

CONTENTS

CHAPTER	TITLE
1	EXECUTIVE SUMMARY
2	SITE CHARACTERISTICS
3	PRINCIPAL DESIGN AND SAFETY CRITERIA
4	FACILITY DESIGN AND OPERATION
5	HAZARD AND ACCIDENT ANALYSIS
6	DERIVATION OF TECHNICAL SAFETY REQUIREMENTS
7	RADIOLOGICAL AND HAZARDOUS MATERIAL PROTECTION
8	INSTITUTIONAL PROGRAMS
9	QUALITY ASSURANCE
10	DECONTAMINATION AND DECOMMISSIONING
APPENDIX A	WASTE CONTAINER INVENTORY CALCULATIONS
APPENDIX B	PLUTONIUM-239 EQUIVALENT ACTIVITY
APPENDIX C	HAZOP SESSION SUMMARY TABLE
APPENDIX D	DETERMINATION OF FREQUENCIES OF SELECTED ACCIDENTS
APPENDIX E	SOURCE TERM/DOSE CALCULATIONS
ATTACHMENT 1	DOE/WIPP-03-3178 WASTE ISOLATION PILOT PLANT REMOTE HANDLED (RH) PRELIMINARY TECHNICAL SAFETY REQUIREMENTS

This page intentionally blank

ACRONYMS

AC	Administrative Control
AIHA	American Industrial Hygiene Association
AIS	Air Intake Shaft
ALARA	As Low As Reasonably Achievable
ANS	American Nuclear Society
ANSI	American National Standard Institute
ARF	Airborne Release Fraction
ARMS	Area Radiation Monitors
ASME	American Society of Mechanical Engineers
BLM	Bureau of Land Management
BR	Breathing Rate
Bq	Becquerel
C&C	Consultation and Cooperation
CA	Controlled Area
CAO	Carlsbad Area Office (DOE)
CAM	Continuous Air Monitor
CCA	Consultation and Cooperation Agreement
CCDF	Complimentary Cumulative Distribution Function
CCTV	Closed Circuit Television
CD	Containers Damaged
CEDE	Committed Effective Dose Equivalent
CFR	Code of Federal Regulations
CH	Contact Handled
Ci	Curie
CI	Container Inventory
CMR	Central Monitoring Room
CMS	Central Monitoring System
D&D	Decontamination and Decommissioning
DAC	Derived Air Concentration
DBA	Design Basis Accident
DBE	Design Basis Earthquake
DBT	Design Basis Tornado
DCF	Dose Conversion Factor
DOE	Department of Energy
DOE-EM	Department of Energy, Office of Environmental Restoration
DOI	Department of Interior
DOP	Dioctylphthalate
DOT	Department of Transportation
DR	Damage Ratio
ECO	Engineering Change Order
EEG	Environmental Evaluation Group
EEGL	Emergency Exposure Guidance Level
EFB	Exhaust Filter Building
EOC	Emergency Operations Center
EPA	Environmental Protection Agency
ERDA	Energy Research and Development Administration
ERPG	Emergency Response Planning Guideline

ACRONYMS

ESH	Environment, Safety, and Health
ERT	Emergency Response Team
FAS	Fixed Air Sampler
FEP	Features, Events, and Processes
FGE	Fissile Gram Equivalent
FEIS	Final Environmental Impact Statement
FLIRT	First Line Initial Response Team
FMEA	Failure Mode and Effects Analysis
FSEIS	Final Supplement Environmental Impact Statement
FY	Fiscal Year
GM	General Manager
GPDD	General Plant System Design Description
HAZOP	Hazard and Operability Study
HEP	Human Error Probability
HEPA	High Efficiency Particulate Filter
HVAC	Heat, Ventilation, and Air Conditioning
ICRP	International Commission on Radiological Protection
ICV	Inner Containment Vessel
IDLH	Immediately Dangerous to Life and Health
LCO	Limiting Condition for Operation
LCS	Limiting Control Setting
LPF	Leakpath Factor
LPU	Local Processing Unit
LWA	Land Withdrawal Act
MAR	Material at Risk
MDC	Minimum Detectable Concentrations
MEI	Maximally Exposed Individual
MgO	Magnesium Oxide
MOC	Management and Operating Contractor
MOI	Maximally Exposed Off-site Individual
MRF	Material Release Fraction
MSDS	Material Safety Data Sheet
MSHA	Mine Safety and Health Administration
NFPA	National Fire Protection Agency
NIST	National Institute of Science and Technology
NMBMMR	New Mexico Bureau of Mines and Mineral Resources
NMDG&F	New Mexico Department of Game and Fish
NRB	Nuclear Review Board
NRC	Nuclear Regulatory Commission
NVP	Natural Ventilation Pressure
OHP	Operational Health Physics
ORNL	Oak Ridge National Laboratory
ORR	Operational Readiness Review
OSHA	Occupational Safety and Health Administration
PABX	Private Automatic Branch Exchange
PA	Public Address or Performance Assessment
PEL	Permissible Exposure limit

ACRONYMS

PE-Ci	Plutonium Equivalent Curie
ppmv	Parts per Million Volume
PSM	Process Safety Management
Pu	Plutonium
QA	Quality Assurance
QAPD	Quality Assurance Program Description
QC	Quality Control
RADCON	Radiological Control
RBP	Radiological Baseline Program
RCRA	Resource Conservation and Recovery Act
rem	roentgen equivalent man
REMS	Radiation Effluent Monitoring System
RF	Respirable Fraction
RFAR	Radio Fire Alarm Reporter
RH	Remote Handled
RBA	Radiological Buffer Area
RMA	Radioactive Material Area
RMS	Radiation Monitoring System
ROD	Record of Decision
RWP	Radiation Work Permit
SAR	Safety Analysis Report
SCR	Silicon Controlled Rectifier
SDD	System Design Descriptions
SEIS	Supplement Environmental Impact Statement
SH	Salt Handling Shaft
SOP	Standard Operating Procedure
SL	Safety Limit
SNL	Sandia National Laboratory
SPDV	Site and Preliminary Design Validation
SPEGL	Short-term Public Exposure Guidance Level
SR	Surveillance Requirement
SRS	Savannah River Site
SSC	System, Structure, and Component
STD	Standard
Sv	Sievert
SWB	Standard Waste Box
TDOP	Ten Drum Overpack
TDS	Total Dissolved Solids
TEDE	Total Effective Dose Equivalent
TEEL	Temporary Emergency Exposure Limit
TLD	Thermoluminescent Detector
TLV-C	Threshold Limit Value-Ceiling
TLV-STEL	Threshold Limit Value-Short Term Exposure Limit
TLV-TWA	Threshold Limit Value-Time Weighted Average
TRUPACT	Transuranic Package Transporter
TRU	Transuranic
TSC	Technical Support Contractor

ACRONYMS

TSR	Technical Safety Requirements
U/G	Underground
UBC	Uniform Building Code
UPS	Uninterruptible Power Supply
USGS	United States Geological Survey
USQ	Unreviewed Safety Questions
VOC	Volatile Organic Compound
WAC	Waste Acceptance Criteria
WACC	Working Agreement for Consultation and Cooperation
WHB	Waste Handling Building
WIPP	Waste Isolation Pilot Plant
WWIS	WIPP Waste Information System

GLOSSARY OF TERMS

ABNORMAL CONDITION. Any deviation from normal conditions that adversely affects or potentially adversely affects the safety performance of the facility.

ACCEPTABLE KNOWLEDGE. An EPA term which includes process knowledge and results from previous testing, sampling, and analysis associated with the waste. Acceptable knowledge includes information regarding the raw materials used in a process or operation, process description, products, and associated wastes. Acceptable knowledge documentation includes the site history and mission, site-specific processes or operations, administrative building controls, and all previous and current activities that generate a specific waste.

ACCIDENT. An unplanned sequence of events that results in undesirable consequences.

ACCIDENT ANALYSIS. For the purposes of implementing the USQ order, the term accident analysis refers to those bounding analyses selected for inclusion in the SAR. The accident analysis is the systematic development of numerical estimates of the expected consequence and frequency of potential accidents.

ACTINIDE. An element in the actinide series beginning with element 89 and continuing through element 103. All the transuranic nuclides considered in this document are actinides.

ACTIVE INSTITUTIONAL CONTROL. (1) Controlling access to a disposal site by any means other than passive institutional controls, (2) performing maintenance operations or remedial actions at a site, (3) controlling or cleaning up releases from a site, or (4) monitoring parameters related to disposal system performance (40 CFR § 191.12).

ACTIVITY. A measure of the rate at which a material emits nuclear radiation, usually given in terms of the number of nuclear disintegrations occurring in a given length of time. The unit of activity used in this document is the curie (Ci).

ADMINISTRATIVE CONTROLS. Provisions relating to organization and management, procedures, record keeping, assessment, and reporting necessary to ensure the safe operation of the facility.

AIR DISPERSION FACTOR. The ratio of the average concentration of a hazardous constituent released into the atmosphere to its maximum concentration at or beyond the unit boundary.

AIR IMMERSION. The pathway of direct external dose from a passing cloud of dispersed radioactive material.

AIR LOCK. An intermediate chamber between zones of different static pressure.

ALARA. As Low As Reasonably Achievable; radiation protection program for minimizing personnel exposures.

ALPHA PARTICLE. A positively charged particle emitted in the radioactive decay of certain radionuclides. Made up of two protons and two neutrons bound together, it is identical to the nucleus of a helium atom. It is the least penetrating of the three common types of radiation; alpha, beta, and gamma radiation, but has the highest ionization factor.

AMERICIUM-241. A transuranic element resulting from the beta decay of plutonium-241.

GLOSSARY OF TERMS

ATMOSPHERIC DISPERSION. Movement of a contaminant due to the cumulative effect of the random motions of air.

AUTHORIZATION BASIS. Those aspects of the facility design basis and operational requirements relied upon by DOE to authorize operation. The authorization basis is described in the SAR and other safety analyses.

BARRIER. "[A]ny material or structure that prevents or substantially delays movement of water and/or radionuclides toward the accessible environment. For example, a barrier may be a geologic structure, a canister, a waste form with physical and chemical characteristics that significantly decrease the mobility of radionuclides, or a material placed over and around waste, provided that the material or structure substantially delays movement of water or radionuclides" (40 CFR § 191.12). Barriers also prevent or delay the movement of hazardous constituents.

BETA PARTICLE. A negatively charged particle emitted in the radioactive decay of certain radionuclides; a free electron.

BECQUEREL. A unit in the International System of Units (SI), of measurement of radioactivity equal to one transformation per second.

BRINE. Saline water containing calcium (Ca), sodium (Na), potassium (K), chlorides (Cl), and minor amounts of other elements.

BOUNDING. Producing greater consequences than other scenarios; or would bound the remainder of scenarios.

CANISTER. As used in this document, a container, usually cylindrical, for remotely handled TRU waste. The waste will remain in this canister during and after burial. A canister affords physical containment but not shielding; shielding is provided during shipment by a cask.

CARCINOGEN. An agent capable of producing or inducing cancer.

CARCINOGENICITY. The ability of a substance to cause the development of cancerous growths in living tissue. Such substances are usually grouped in two classifications: (1) those that are known to induce cancer in man or animals either by operational exposure in industry or by ingestion in feedstuffs and (2) those that have been found to cause cancer in animals under experimental conditions.

CASK. A massive shipping container providing shielding for highly radioactive materials and holding one or more canisters.

CENTRAL MONITORING ROOM (CMR). A room at the WIPP facility equipped to monitor alarm functions and provide reliable communications.

CENTRAL MONITORING SYSTEM (CMS). A computer system that monitors the WIPP facility instrumentation; operated from the Central Monitoring Room.

GLOSSARY OF TERMS

COMMITTED EFFECTIVE DOSE EQUIVALENT (CEDE). The sum of the committed dose equivalents to various organs or tissues in the body from radioactive material taken into the body, each multiplied by the tissue-specific weighting factor. Expressed in terms of rem (or sievert).

CONCENTRATION. The amount of a substance contained in a unit quantity (mass or volume) of a sample.

CONSERVATIVE. As a term used with predictions or estimates, "conservative" means one in which the uncertain inputs are used in a way that overestimates an adverse impact.

CONSEQUENCE. The direct, undesirable result of an accident sequence.

CONSULTATION AND COOPERATION AGREEMENT. An agreement that affirms the intent of the Secretary of Energy to consult and cooperate with the State of New Mexico with respect to State public health and safety concerns. The term "Agreement" means the July 1, 1981, Agreement for Consultation and Cooperation, as amended by the November 30, 1984, "First Modification," the August 4, 1987, "Second Modification," and the March 22, 1988, modification to the Working Agreement.

CONTACT-HANDLED WASTE. Transuranic waste with a surface dose rate not greater than 200 millirem per hour.

CONTAINER INVENTORY. The amount of radioactive or hazardous material within a container or source.

CREEP. A very slow, usually continuous, time-dependent movement of soil or rock; refers to the geologic phenomenon experienced as the gradual flow of salt under compressive loading.

CREEP CLOSURE. Closure of underground openings, especially openings in salt, by plastic flow of the surrounding rock under lithostatic pressure.

CRITICALITY. A state in which a self-sustaining nuclear chain reaction is achieved.

DECOMMISSIONING. Actions taken upon abandonment of the repository to reduce potential environmental, health, and safety impacts, including repository sealing as well as activities to stabilize, reduce, or remove radioactive materials or demolish surface structures.

DECOMMISSIONING PHASE. The term "decommissioning phase" means the period of time beginning with the end of the disposal phase and ending when all shafts at the Waste Isolation Pilot Plant repository have been backfilled and sealed.

GLOSSARY OF TERMS

DEFENSE IN DEPTH. Defense in depth is a safety design concept or strategy that shall be applied at the beginning and maintained throughout the facility design process. This safety design strategy is based on the premise that no one layer of protection is completely relied upon to ensure safe operation.

DEFENSE WASTE. Nuclear waste deriving from the manufacture of nuclear weapons and the operation of naval reactors. Associated activities, such as the research carried on in the weapons laboratories, also produce defense waste.

DESIGN BASIS. The set of requirements that bound the design of the structure, systems, or components of the facility.

DESIGN BASIS EARTHQUAKE (DBE). An earthquake that is the most severe design basis accident of this type and that produces the vibratory ground motion for which safety class items are designed to remain functional. The DBE is the most severe credible earthquake that could occur at the WIPP site as described in Chapter 2. DBE SSCs shall be designed to withstand a free-field horizontal and vertical ground acceleration of 0.1g, based on a 1,000-year recurrence period, and retain their safety functions.

DESIGN BASIS TORNADO (DBT). A tornado that is the most severe design basis accident of that type applicable to the area under consideration. The DBT is the most severe credible tornado that could occur at the WIPP site as described in Chapter 2. DBT SSCs shall be designed to withstand the highest winds generated by this tornado (183 mi/h [293 km/h]), based on a 1,000,000-year recurrence period, and retain their safety function.

DESIGN LIFE. The design life of components or systems generally refers to the estimated period of time that the component or system is expected to perform within specifications before the effects of aging result in performance deterioration or a requirement to replace the component or system.

DISPOSAL. See Land Disposal.

DISPOSAL FACILITY. A facility or part of a facility into which hazardous waste is intentionally placed and in which hazardous waste will remain after closure.

DISPOSAL PHASE. The term "disposal phase" means the period of time during which transuranic waste is disposed of at the Waste Isolation Pilot Plant, beginning with the initial emplacement of transuranic waste underground for disposal and ending when the last container of transuranic waste is emplaced underground for disposal.

DISPOSAL ROOM. An excavated cavity in the Waste Isolation Pilot Plant underground in which transuranic waste will be emplaced during disposal operations.

DISPOSAL SYSTEM. For purposes of defining the PA conceptual model, the disposal system is defined as the combination of engineered and natural barriers and other assurances that isolate waste after disposal, or the more general features, events, and processes that are capable of affecting performance of the disposal unit.

DOSE. A general term used for brevity in place of dose equivalent, effective dose equivalent, committed effective dose equivalent, etc.

GLOSSARY OF TERMS

DOSAGE. The concentration-time profile for exposure to toxicological hazards.

DOSE CONVERSION FACTOR. A numerical factor used in converting radionuclide uptake (curies) in the body to the resultant radiation dose (rem).

DOSE EQUIVALENT. The product of absorbed dose in rad in tissue, a quality factor, and all other modifying factors at the location of interest. Expressed in rem.

DOSE RATE. The radiation dose delivered per unit time (rem per hour).

DRIFT. A horizontal passageway in a mine.

EFFECTIVE DOSE EQUIVALENT (EDE). The sum of the products of the dose equivalent received by specified tissues of the body and tissue-specific weighting factor. Expressed in rem.

EFFLUENT. Wastewater or airborne emissions discharged into the environment.

EMPLACEMENT. At the Waste Isolation Pilot Plant, the placing of radioactive wastes in the repository.

ENGINEERED BARRIERS. Backfill, seals, and any other man-made barrier components of the disposal system.

EVENT. A phenomenon that occurs instantaneously or within a short time interval relative to the time frame of interest.

EVENT TREE. A logic model that graphically portrays the combinations of events and circumstances in an accident scenario.

EXCLUSIVE USE AREA. This 277-acre area is surrounded by a five-strand barbed wire fence and is restricted for the use of DOE, its contractors and subcontractors in support of the WIPP project. This area is posted against trespass and is excluded from use by the general public. However, public access to the LWA (16 section) area up to the Exclusive Use Area is allowed for grazing purposes (see Figure 5.2-1 and the WIPP Land Management Plan).

FACILITY. Any equipment, structure, system, or component, or activity that fulfills a specific purpose. For the purpose of implementing *DOE Standard 3009*-94, the definition most often refers to buildings, and other structures, their functional systems and equipment, and other fixed systems and equipment installed therein to delineate a facility (*DOE Standard 3009*-94).

FAULT TREE. A tree-like cause-and-effect diagram of hypothetical events. Analysis of fault trees is used to investigate failures in a system or concept.

FILTER BANK. An arrangement of air filters in series and/or parallel.

FISSILE. Describes a nuclide that undergoes fission on absorption of neutrons of any energy, in particular, slow neutrons provided the effective thermal neutron production cross section exceeds the effective thermal neutron absorption cross section.

GLOSSARY OF TERMS

FREQUENCY. The number of occurrences per unit time at which observed events occur or are predicted to occur.

GAMMA RADIATION. Short-wavelength electromagnetic radiation emitted in the radioactive decay of certain radionuclides; high-energy photons.

GAS GENERATION MODEL. A computational model that can simulate and/or predict the rate and quantity of gases generated by waste transformation processes in a disposal room of the decommissioned repository.

GAS GENERATION RATE. The combined gas production rate from all species of gases produced as a result of transuranic waste transformations such as corrosion, microbial degradation, and/or radiolysis at any given time. The rate of gas production throughout the history of the repository is expected to vary depending on repository conditions with respect to humidity, total or partial brine inundation, competitive reactions that absorb specific gases, and the ability of the repository to retain the gases generated. The term is also applied to individual gases.

GENERATOR AND/OR STORAGE SITES. Refers to the Department of Energy sites nationwide where transuranic wastes are generated and/or stored as a result of activities associated with nuclear weapons production.

GROUNDWATER. Water below the land surface in a zone of saturation.

GROUNDSHINE. The pathway of direct external dose received from radioactive material that has been deposited on the ground after being dispersed from the accident site.

GROUT. A mortar or cement slurry (of high water content) used to plug potential fluid-flow paths in geologic or engineered structures.

HAZOP. Hazard and Operability Study. A systematic method in which process hazards and potential operating problems are identified using a series of guide words to investigate process deviations.

HAZARD. A source of danger (i.e., material, process, energy source) with the potential to cause illness, injury, or death, loss of use, or loss of property.

HAZARD ANALYSIS. The determination of material, system, process, and plant characteristics that can produce undesirable consequences, followed by the assessment of hazardous situations associated with a process or activity. Largely qualitative techniques are used to pinpoint weaknesses in design or operation of the facility that could lead to accidents. The SAR Hazards Analysis examines the complete spectrum of potential accidents that could expose members of the public, onsite workers, facility workers, and the environment to hazardous materials.

HAZARDOUS CONSTITUENT. Those chemicals identified in Appendix VIII of 40 CFR Part 261.

HAZARDOUS MATERIAL. Any solid, liquid, or gaseous material that is toxic, explosive, flammable, corrosive, or otherwise physically or biologically threatening to health. Candidate hazards include radioactive materials and hazardous chemicals.

HAZARDOUS WASTE. A hazardous waste as defined in 40 CFR § 261.3.

GLOSSARY OF TERMS

HEADSPACE GASES. The free gas volume at the top of a closed container (between the container lid and the waste inside the container) or containment, such as a drum or bin, containing TRU-mixed or simulated waste. The gas may be generated from biological, chemical, or radiolytic processes; this would include contributions from volatile organic compounds (VOCs) present in the waste.

HEPA FILTER. A high-efficiency particulate air filter usually capable of 99.7 percent efficiency as measured by a standard photometric test using 0.3-micron droplets (aerodynamic equivalent diameter) of dioctylphthalate (DOP).

HORIZON. In geology, an interface indicative of a particular position in a stratigraphic sequence. For instance, the waste-emplacement horizon in the Salado Formation at the Waste Isolation Pilot Plant is the level about 650 meters (2,150 feet) deep where openings are mined for waste disposal.

HUMAN ERROR. Any action (or lack thereof) that exceeds some limit of acceptability where the limits of human performance are defined by the system. Includes actions by designers, operators, or managers that may contribute to or result in accidents.

HUMAN FACTORS. A discipline concerned with designing machines, operations, and work environments to match human capabilities, limitations, and needs.

IDLH. Immediately Dangerous to Life and Health represents a maximum airborne concentration from which one could escape within 30 minutes without any escape-impairing symptoms or any irreversible health effects.

IMMEDIATE WORKER. A worker directly involved in the operation of the facility or process (handling waste containers) when an accidental release occurs.

IN SITU. In the natural or original position. The phrase is used in this document to distinguish in-place experiments, rock properties, and so on, from those measured in the laboratory.

INTERNAL ACCIDENT. Accidents initiated by process systems or human actions under the control of a given facility.

INITIATING EVENT. The first event in an event sequence that can result in an accident unless engineered protection systems or human actions intervene to prevent or mitigate the accident.

INJECTION WELL. A well into which fluids are injected.

INSTITUTIONAL CONTROLS. Human actions to control a waste management facility such as the WIPP. Institutional controls are described as "active" and "passive." Active institutional controls are defined in 40 CFR § 191.12 as: (1) controlling access to a disposal site by any means other than passive institutional controls, (2) performing maintenance operations or remedial actions at a site, (3) controlling or cleaning up releases from a site, or (4) monitoring parameters related to disposal system performance. Passive institutional controls are defined in 40 CFR §191.12 as: (1) permanent markers placed at a disposal site, (2) public records and archives, (3) government ownership and regulations regarding land or resource use, and (4) other methods of preserving knowledge about the location, design, and contents of a disposal system.

GLOSSARY OF TERMS

INTENSITY, EARTHQUAKE. A measure of the effects of an earthquake on humans and structures at a particular place. Not to be confused with magnitude.

INTERNATIONAL SYSTEM OF UNITS. The version of the metric system which has been established by the International Bureau of Weights and Measures and is administered in the United States by the National Institute of Standards and Technology. The abbreviation for this system is "SI".

ISOTOPE. An atom of a chemical element with a specific atomic number and atomic weight. Isotopes have the same number of protons, but different number of neutrons.

LAND DISPOSAL. Emplacement in or on the land, except in a corrective action management unit, and includes, but is not limited to, placement in a landfill, surface impoundment, waste pile, injection well, land treatment facility, salt dome formation, salt bed formation, underground mine or cave, or placement in a concrete vault, or bunker intended for disposal purposes.

LAND WITHDRAWAL ACT. Public Law 102-579, as amended by Public Law 104-201 (H.R. 3230, 104th Congress--1996), which withdraws the land at the Waste Isolation Pilot Plant site from "entry, appropriation, and disposal"; transfers jurisdiction of the land from the Secretary of the Interior to the Secretary of Energy; reserves the land for activities associated with the development and operation of the Waste Isolation Pilot Plant; and includes many other requirements and provisions pertaining to the protection of public health and the environment.

LIKELIHOOD. A measure of the expected probability or frequency of an events occurrence.

LIMITING CONDITION FOR OPERATION. The lowest functional capability or performance levels of safety-related structures, systems, or components.

LONG TERM. Refers to the 10,000 years after shaft sealing for which performance assessment calculations and models assess the behavior of the repository with respect to compliance with 40 CFR Part 191 and 40 CFR § 268.6.

LOWER EXPLOSIVE LIMIT. The lower limit of flammability of a gas or vapor at ordinary ambient temperatures expressed in percent of the gas or vapor in air by volume. This limit is assumed constant for temperatures up to 120 ^{o}C (250 ^{o}F).

MAGNITUDE, EARTHQUAKE. A measure of the total energy released by an earthquake. Not to be confused with intensity.

MARKER BEDS (MB). MBs are well-defined layers of rock that mark distinct divisions in major geological strata or geological time frames.

GLOSSARY OF TERMS

MAXIMALLY EXPOSED INDIVIDUAL (MEI). A hypothetical member of the public who is exposed to a release of radionuclides in such a way that the individual will receive the maximum dose from such a release. Review of the WIPP Land Management Plan (LMP) indicates that public access to the WIPP 16-section area up to the exclusive use area shown is allowed for grazing purposes, and up to the DOE off limits area" for recreational purposes. Although analyses are traditionally conducted for a maximally exposed off-site individual (MOI) at the facility site boundary, in accordance with DOE Order 6430.1A, Section 1300-3.2, the location of the MEI is located at the "closest point of public access," or the WIPP "exclusive use area." The location of the MEI is also consistent with guidance for the implementation of 40 CFR 191, Subpart A.

Exposure to the MEI is greatest at the Exclusive Use Area (closest distance a member of the public may get to the release point due to LMP access restrictions) due to the dispersion model chosen for accident analysis. As discussed in detail in SAR Section 5.2, the release is a non-plume release (vent release as defined in NRG 1.145), not subject to plume lofting or fumigation conditions. The dose to an individual is therefore greatest at the closest allowable access distance to the point of release.

MEAN. The average value. For a given set of *n* values, the mean is the sum of their values divided by *n*.

MEDIAN. The median of a set of data is the value such that half of the observations are less than that value and half are greater than that value.

MERCALLI INTENSITY. A scale of measurement of earthquake intensity.

MITIGATE. To take practicable means to avoid or minimize release of hazardous or radioactive material or consequences to a hypothetical individual or population,

MITIGATION. Equipment and/or procedures designed to interfere with accident propagation and/or reduce accident consequences

MIXED WASTE. Mixed waste contains both radioactive and hazardous components, as defined by the Atomic Energy Act and the Resource Conservation and Recovery Act, respectively.

NASH DRAW. A shallow valley, approximately 5 mi (8.1 km) wide, open to the southwest located to the west of the WIPP site.

GLOSSARY OF TERMS

NONINVOLVED WORKER. An onsite worker not involved in the operation of the facility when a release occurs. For accident analysis consequence assessment, the maximally exposed noninvolved worker is assumed to be located at a distance of 100 meters from each release point due to restrictions on dispersion modeling used in this safety analysis at close-in distances (<100 meters).

NORMAL CONDITIONS. All activities associated with the facility mission carried out within defined process conditions, performance in accordance with procedures, etc.

NORMAL OPERATION. All normal conditions that frequency estimation techniques indicate occur with a frequency greater than 0.1 events per year.

OFF-SITE. A position located at or beyond the WIPP Site Boundary.

OFF LIMITS AREA. An area consisting of approximately 1454 acres which is posted in accordance with 10 CFR Part 860 and has been designated as such in the Federal Register. This area is managed by an off-limits policy which allows DOE to authorize the use of the area as they determine the need. Public access to the WIPP LWA (16 section) area up to the Off Limits Area is allowed for recreational purposes (see Figure 5.2-1 and the WIPP Land Management Plan).

ON-SITE. A position located within the WIPP Site Boundary.

PACKAGE. In the regulations governing the transportation of radioactive materials, the packaging together with its radioactive contents as presented for transport.

PACKAGING. A shipping container without its contents.

PANEL. A group of several underground rooms connected by drifts. Within the Waste Isolation Pilot Plant, a panel consists of seven rooms connected by drifts at each end.

PARTICULATES. Solid particles small enough to become airborne.

PASSIVE INSTITUTIONAL CONTROLS. "(1) [P]ermanent markers placed at a disposal site, (2) public records and archives, (3) government ownership and regulations regarding land or resource use, and (4) other methods of preserving knowledge about the location, design, and contents of a disposal system" (40 CFR § 191.12).

PERFORMANCE ASSESSMENT. A term used to denote quantitative activities carried out to evaluate the long-term ability of the Waste Isolation Pilot Plant to effectively isolate the waste, to ensure long-term health and safety of the public by complying with 40 CFR § 268.6, and to supply data/information to the compliance analysis for demonstrating regulatory compliance. The final analysis of compliance will consist of a qualitative assessment of the quantitative results of the performance assessment.

PLUTONIUM. A metallic, radioactive element, symbol Pu, atomic number 94, in the actinide series of elements; used as a nuclear fuel, to produce radioactive nuclides for research, and as the fissile agent in nuclear weapons.

GLOSSARY OF TERMS

POLYHALITE. An evaporite mineral: $K_2MgCa_2(SO_4)_4 \bullet 2H_2O$. It is a hard, nearly insoluble mineral with no economic value.

POST-CLOSURE PERIOD. A designated period of time beginning with the end of the Decommissioning Phase and extending through the end of the regulatory time frame of 10,000 years.

POTASH. A potassium compound, especially as used in agriculture or industry.

PREVENTIVE FEATURE. Any structure, systems, or component that serves to prevent the release of hazardous material in an accident scenario.

PROPERTY PROTECTION AREA. The interior core of the facility, comprised of about 34 acres and is bordered by a chain link security fence (see Figure 5.2-1).

PUBLIC. Defined in DOE-STD-3009-94 as individuals outside of the DOE Site Boundary. However, review of the WIPP Land Management Plan indicates that public access to the WIPP 16-section area up to the exclusive use area is allowed for grazing purposes, and up to the DOE off limits area" for recreational purposes. Although accident analyses consequences are traditionally conducted for a maximally exposed off-site individual (MOI) at the facility site boundary, in accordance with DOE Order 6430.1A, Section 1300-3.2, the location of the public (MEI) for accident consequence assessment in this safety analysis is at the "closest point of public access," or the WIPP "exclusive use area." The location of the MEI is also consistent with guidance for the implementation of 40 CFR 191, Subpart A.

PUBLIC LAW 96-164. The U.S. Department of Energy National Security and Military Applications of Nuclear Energy Act of 1980. Public Law 96-164 directed the Department of Energy to proceed with the design and development of the Waste Isolation Pilot Plant.

PUBLIC LAW 102-579. *See* Land Withdrawal Act.

QUALITY ASSURANCE. The planned and systematic actions necessary to provide adequate confidence that a structure, system, or component will perform satisfactorily in service.

QUALITY ASSURANCE PROGRAM PLANS (QAPP). Documents that describe the overall program plans and activities to meet the project's quality assurance goals.

QUALITY ASSURANCE PROJECT PLANS (QAPjP). Documents that ensure site-specific waste characterization activities meet the data quality objectives.

QUALITY CONTROL. Those quality assurance activities that provide a means to control and measure the characteristics of a structure, system, or component to established requirements.

RADIOLYSIS. Chemical decomposition by the action of radiation.

GLOSSARY OF TERMS

REAL-TIME RADIOGRAPHY. A nondestructive, nonintrusive examination technique that enables a qualitative (and in some cases semiquantitative) evaluation of the contents of a waste container. Real-Time Radiography utilizes x-rays to inspect the contents of the waste container and allows the operator to view events in progress (real time). Real-Time Radiography is used to examine and verify the physical form of the waste for certain waste forms, identify individual waste components, and verify the absence of certain noncompliant items, as applicable.

REASONABLE. (1) Not conflicting with reason, (2) not extreme or excessive, (3) having the faculty of reason, or (4) possessing sound judgment.

RELEASE POINT. There are two release points for the TRU and mixed wastes accidents described in the SAR, the Exhaust Filter Building exhaust to the atmosphere and the WHB HEPA filtration exhaust to the atmosphere.

REM. A common unit of dose equivalent, effective dose equivalent, etc.

REMOTE-HANDLED WASTE. Transuranic waste with a surface dose rate of 200 millirem per hour or greater. RH-TRU waste received at the WIPP may not exceed a surface dose rate of 1,000 rem per hour (Public Law 102-579, Section 7(a)(1)(A)).

REPOSITORY. The portion of the Waste Isolation Pilot Plant underground system within the Salado Formation, including the access drifts, waste panels, and experimental areas, but excluding the shafts.

REPOSITORY/SHAFT SYSTEM. The Waste Isolation Pilot Plant underground workings, including the shafts, all engineered and natural barriers, and the altered zones within the Salado Formation and overlying units resulting from construction of the underground workings.

RESERVES. Mineral resources that can be extracted profitably by existing techniques and under present economic conditions.

RISK. In accident analysis, the probability of weighted consequences of an accident defined as the accident frequency per year multiplied by the consequences.

RESOURCE CONSERVATION AND RECOVERY ACT PERMIT APPLICATION. An application, which is submitted by the owner/operator of a hazardous waste management unit to the state (if authorized by the Environmental Protection Agency) or to the Environmental Protection Agency, for a Resource Conservation and Recovery Act permit to operate the unit.

RESOURCES. Mineralization that is concentrated enough, in large enough quantity, and in physical and chemical forms such that extraction is currently or potentially feasible and profitable.

RETRIEVABLE. Describes storage of radioactive waste in a manner designed for recovery without loss of control or release of radioactivity.

ROOM. An excavated cavity within a panel in the underground. Within the Waste Isolation Pilot Plant, a room is about 33 ft (10 m) wide, 13 ft (4 m) high, and 300 ft (91 m) long.

GLOSSARY OF TERMS

SAFETY ANALYSIS. A documented process: (1) to provide systematic identification of hazards within a given DOE operation: (2) to describe and analyze the adequacy of the measures taken to eliminate, control, or mitigate identified hazards; and (3) to analyze and evaluate potential accidents and their associated risks.

SAFETY ANALYSIS REPORT. A report that documents the adequacy of safety analysis to ensure that a facility can be constructed, operated, maintained, and shutdown, and decommissioned safely and in compliance with applicable laws and regulations.

SAFETY ASSURANCE. The process of providing adequate confidence that an acceptable safety basis for the facility exists.

SAFETY BASIS. The combination of information relating to the control of hazards at a facility (including design, engineering analyses, and administrative controls) upon which the DOE depends for its conclusion that activities at the facility may be conducted safely.

SCENARIO. A combination of naturally occurring or human-induced events and processes that represent realistic future changes to the repository, geologic, and geohydrologic systems that could cause or promote the escape of radionuclides and/or hazardous constituents from the repository.

SEAL. An engineered barrier designed to isolate the waste and to impede fluid flow in the shafts.

SEISMIC RISK ZONE. A designation of a geographic region expressing the maximum intensity of earthquakes that could be expected there.

SHAFT PILLAR. The cylindrical volume of rock around a shaft from which major underground openings are excluded in order that they not weaken the shaft.

SIEVERT. The SI unit of any quantities expressed as dose equivalent. (1 Sv = 100 rem)

SITE BOUNDARY. The boundary encompassing the WIPP 10,240 acres (LWA 16 sections).

SLUDGE. Refers to de-watered contact-handled transuranic wastes containing both organic and inorganic constituents that must meet the Waste Acceptance Criteria for shipment and disposal at the Waste Isolation Pilot Plant repository. High sludges are contact-handled transuranic waste where the sludge component constitutes 50 percent or more of the waste volume; low sludges are the same type of waste containing less than 50 percent by volume of sludge.

SOURCE TERM. Source term is the quantity of radioactive or hazardous constituents available for transport or the maximum concentration of hazardous constituents in a particular phase, depending on the type of information available.

TECHNICAL SAFETY REQUIREMENTS. Those requirements that define the conditions, safe boundaries, and the management or administrative controls necessary to ensure the safe operation of the facility and to reduce the potential risk to the public and facility workers from uncontrolled releases of radioactive or hazardous materials.

GLOSSARY OF TERMS

TOTAL EFFECTIVE DOSE EQUIVALENT (TEDE). The sum of the effective dose equivalent (EDE) from sources external to the body during the year, plus the committed effective dose equivalent (CEDE).

TOXICITY. The ability of a substance to cause damage to living tissue, impairment of the central nervous system, severe illness or, in extreme cases, death when ingested, inhaled, or absorbed by the skin.

TOXICOLOGICAL HAZARD. Any substance having chemical properties that pose a potential threat to the public, workers, or the environment.

TRANSURANIC NUCLIDE. A nuclide with an atomic number greater than that of uranium (92). All transuranic nuclides are produced artificially and are radioactive.

TRANSURANIC WASTE. The term "transuranic waste" means waste containing more than 100 nanocuries of alpha-emitting transuranic isotopes per gram of waste, with half-lives greater than 20 years, except for: (1) high-level radioactive waste, (2) waste that the Secretary has determined, with the concurrence of the Administrator, does not need the degree of isolation required by the disposal regulations, or (3) waste that the Nuclear Regulatory Commission has approved for disposal on a case-by-case basis in accordance with 10 CFR 61.

TREATMENT. Means any method, technique, or process, including neutralization, designed to change the physical, chemical, or biological character or composition of any hazardous waste so as to neutralize such waste, or so as to recover energy or material resources from the waste, or as to render such waste non-hazardous, or less hazardous; safe to transport, store, or dispose of; or amenable for recovery, amenable for storage, or reduced in volume.

TYPE A PACKAGING. Means a packaging designed to retain the integrity of containment and shielding required by this part under normal conditions of transport as demonstrated by the tests set forth in 49 CFR § 173.465 or 173.466, as appropriate. Note: Radioactive waste is transported to WIPP in Type B packaging.

UNINTERRUPTIBLE POWER SUPPLY (UPS). A power supply that provides automatic, instantaneous power, without delay or transients, on failure of normal power. It can consist of batteries or full-time operating generators. It can be designated as standby or emergency power depending on the application. Emergency installations must meet the requirements specified for emergency.

VOLATILE ORGANIC COMPOUNDS (VOCs). RCRA-regulated organic compounds which readily pass into the vapor state and are present in transuranic mixed waste.

WASTE ACCEPTANCE CRITERIA. A set of conditions established for permitting transuranic wastes to be packaged, shipped, managed, and disposed of at the Waste Isolation Pilot Plant.

WASTE CHARACTERIZATION. Sampling, monitoring, and analysis activities to determine the nature of the waste.

GLOSSARY OF TERMS

WASTE CHARACTERIZATION PROGRAM. The processes of transuranic waste analysis to support the Part B of the Resource Conservation and Recovery Act permit application, other permits, transportation requirements, and other program requirements. These analyses include documentation of waste generation processes, visual examination of waste components, radiography analysis, and waste assay for radionuclide content. Waste matrix and headspace gas chemical analyses are also part of the characterization program.

WASTE FORM. A term used to emphasize the physical and chemical properties of the waste.

WASTE MATRIX. The material that surrounds and contains the hazardous constituents and to some extent protects them from being released into the surrounding rock and groundwater. Only material within the canister (or drum or box) that contains the waste is considered part of the waste matrix.

WASTE STORAGE/DISPOSAL. For the purposes of this Safety Analysis Report, with regard to transuranic waste: the term "storage" refers to the temporary storage of that waste above ground; and, the term "disposal" refers to that waste which has been emplaced in the underground horizon.

WORKING AGREEMENT. Appendix B of the Agreement of Consultation and Cooperation, which sets forth the working details of that Agreement.

WORST CASE. A conservative (high) estimate of the consequences of the most severe accident identified.

This page intentionally blank

CHANGE HISTORY

REVISION	AFFECTED SECTIONS/ PAGE NUMBERS	DATE	ADDITIONAL DESCRIPTION OF NATURE OF REVISIONS
0	Entire Document	01/03	Initial Issue

CHANGE HISTORY

This page intentionally blank

EXECUTIVE SUMMARY
TABLE OF CONTENTS

SECTION	TITLE	PAGE NO.
1.1	Facility Background and Mission	1.1-1
	References for Section 1.1	1.1-3
1.2	Facility Overview	1.2-1
	1.2.1 Facility Location	1.2-1
	1.2.2 Facility Design	1.2-1
	1.2.3 Facility Operations	1.2-2
	References for Section 1.2	1.2-4
1.3	Safety Analysis Overview and Conclusions	1.3-1
	1.3.1 Safety Analysis Report Strategy and Approach	1.3-1
	1.3.1.1 Facility Hazard Classification	1.3-1
	1.3.1.2 Design and Operation Descriptions	1.3-1
	1.3.1.3 RH Waste Handling Hazard Analysis	1.3-2
	1.3.1.4 Defense in Depth	1.3-3
	1.3.1.5 Waste Acceptance Criteria	1.3-4
	1.3.1.6 Nuclear Criticality	1.3-5
	1.3.1.7 Atmospheric Dispersion	1.3-7
	1.3.1.8 Significant Hazards	1.3-7
	1.3.2 Off-site and On-site Risk Evaluation Guidelines	1.3-8
	1.3.2.1 Radiological Evaluation Guidelines	1.3-8
	1.3.2.2 Radiological Evaluations	1.3-9
	1.3.2.3 Non-radiological Evaluation Guidelines	1.3-11
	1.3.2.4 Non-radiological Evaluations	1.3-12
	1.3.2.5 Preventive and Mitigative Features	1.3-13
	1.3.2.6 Technical Safety Requirements	1.3-15
	1.3.3 Safety Analysis Conclusions	1.3-16
	1.3.3.1 Safety Analysis Overview	1.3-16
	1.3.3.2 Comparison to Standards of 40 CFR 61 and 40 CFR 191	1.3-18
	1.3.4 Analysis of Beyond the Design Basis Accidents	1.3-19
	1.3.4.1 Operational Events	1.3-19
	1.3.4.2 Natural Phenomena	1.3-20
	References for Section 1.3	1.3-21
1.4	Organizations	1.4-1
	References for Section 1.4	1.4-2
1.5	Safety Analysis Report Organization	1.5-1
	References for Section 1.5	1.5-2
1.6	Statutes, Federal Rules, and DOE Directives Applicable to the Preclosure WIPP RH TRU Waste Operational Safety	1.6-1

EXECUTIVE SUMMARY
LIST OF FIGURES

FIGURE	TITLE	PAGE NO.
Figure 1.2-1,	WIPP Location in Southeastern New Mexico	1.2-5
Figure 1.2-2,	Spatial View of the WIPP Facility	1.2-6
Figure 1.2-3a,	WIPP Surface Structures	1.2-7
Figure 1.2-3b,	Legend for Figure 1.2-3	1.2-8
Figure 1.2-4,	Underground Subsurface Areas	1.2-9

EXECUTIVE SUMMARY
LIST OF TABLES

TABLE	TITLE	PAGE NO.
Table 1.3-1	MEI Risk Evaluation Guidelines	1.3-24
Table 1.3-2	Noninvolved Worker Risk Evaluation Guidelines	1.3-25
Table 1.5-1,	Consultation and Cooperation (WACC) Agreement/SAR Correlation	1.5-3
Table 1.5-2,	DOE Order 5480.23/ 10CFR830.204/ WIPP SAR Correlation	1.5-8

This page intentionally blank

1.1 Facility Background and Mission

The United States Department of Energy (DOE) was authorized by Public Law 96-164[1] to provide a research and development facility for demonstrating the safe permanent disposal of transuranic (TRU) wastes from national defense activities and programs of the United States exempted from regulations by the U.S. Nuclear Regulatory Commission (NRC). The Waste Isolation Pilot Plant (WIPP), located in southeastern New Mexico near Carlsbad, was constructed to be the repository for disposal of TRU wastes.

In accordance with the 1981 and 1990 Records of Decision (ROD),[2,3] the development of the WIPP was to proceed with a phased approach. Development of the WIPP began with a siting phase, during which several sites were evaluated and the present site selected based on extensive geotechnical research, supplemented by testing.

The site and preliminary design validation phase (SPDV) followed the siting phase, during which two shafts were constructed, an underground testing area was excavated, and various geologic, hydrologic, and other geotechnical features were investigated. The construction phase followed the SPDV phase during which surface structures for receiving waste were built and underground excavations were completed for waste emplacement.

At the conclusion of the construction phase, the DOE proposed a test phase, to be followed by the disposal phase for waste emplacement operations. The test phase was to involve the use of limited quantities of contact-handled (CH) TRU waste to conduct tests in the WIPP underground to provide data for reducing the uncertainties in the performance assessment required for compliance with the long-term waste isolation regulations of the U.S. Environmental Protection Agency (EPA), Subpart B of 40 CFR Part 191.[4] To enable the receipt of CH-TRU waste at the WIPP site for the tests the Congress enacted the WIPP Land Withdrawal Act[5] of 1992 (Public Law 102-579). The law also provided for authorizations of detailed regulatory requirements for the WIPP. As a result of major programmatic redirection in October 1993, the WIPP test phase was modified by substituting the previously planned WIPP underground radioactive tests with laboratory tests.

As a result of successful tests, the EPA and the New Mexico Environmental Department (NMED) authorized operations. WIPP started receiving CH TRU and TRU mixed waste in 1999. WIPP is currently scheduled to receive remote-handled (RH) TRU mixed waste (hereafter referred to as RH TRU waste or RH waste) in the second quarter of FY05.

The disposal phase is currently scheduled to last 35 years,[6, 7] and will consist of receipt, handling, and emplacing TRU waste in the repository for disposal, and will end when the design capacity of the planned repository has been reached.

The decommissioning phase, during which the repository will be prepared for permanent closure, will follow the disposal phase. Surface facilities will be decontaminated and decommissioned, underground excavations will be prepared for closure, and shaft seals will be emplaced. This phase is currently projected to last for 10 years. The post-decommissioning phase will consist of active and passive institutional controls. Active institutional controls will include activities such as control of access to the site, post closure environmental monitoring, implemented consistent with applicable regulations and permit conditions and will continue for at least 100 years [8].

These controls will be designed to ensure that the repository functions as designed, and the potential for future, inadvertent human intrusion is reduced to a level that renders such intrusion unlikely.

This Preliminary Safety Analysis Report (PSAR) documents the safety analyses that develop and evaluate the adequacy of the WIPP RH TRU safety basis necessary to ensure the safety of workers, the public, and the environment from the hazards posed by WIPP waste handling and emplacement operations during the disposal phase and hazards associated with the decommissioning and decontamination phase.

The analyses of the hazards associated with the long-term (10,000 year) disposal of TRU and TRU mixed waste, and demonstration of compliance with the requirements of 40 CFR 191, Subpart B [4] have been addressed in detail in the WIPP Compliance Certification Application (CCA).[8] The EPA reviewed the CCA and subsequently certified that the WIPP was in compliance with the requirements in 40 CFR 191, Subpart B and C on May 13, 1998.[9] SAR Section 5.3, Long-Term Waste Isolation Assessment summarizes the assessment.

References for Section 1.1

1. Public Law 96-164, Department of Energy National Security and Military Applications of Nuclear Energy Authorization Act of 1980, December 1979.

2. U.S. Department of Energy, 46 FR 9162, Record of Decision, Waste Isolation Pilot Plant, January 1981.

3. U.S. Department of Energy, 55 FR 256892, Record of Decision, Waste Isolation Pilot Plant, June 1990.

4. U.S. Environmental Protection Agency, 40 CFR 191, Environmental Radiation Protection for Management and Disposal of Spent Nuclear Fuel, High Level and Transuranic Wastes, Subpart B, Environmental Standards for Disposal, December 1993.

5. Public Law 102-579, Waste Isolation Pilot Plant Land Withdrawal Act, US Congress, October 1992 [as amended by Public Law 104-201].

6. DOE/NTP-96-1204, The National Transuranic Waste Management Plan, U.S. Department of Energy, Carlsbad Field Office.

7. DOE/EIS-0026-S-2, WIPP Disposal Phase Final Supplemental Environmental Impact Statement, U. S. Department of Energy, Carlsbad Area Office, September 1997.

8. DOE/CAO-1996-2184, Title 40 CFR 191 Compliance Certification Application for the Waste Isolation Pilot Plant, October 1996.

9. EPA (U.S. Environmental Protection Agency), 1998. Criteria for the Certification and Re-certification of the Waste Isolation Pilot Plant's Compliance with the Disposal Regulations: Certification Decision: Final Rule, Federal Register, Volume 63, pages 27354 through 27406, May 1998, Radiation Protection Division, Washington, D.C.

This page intentionally blank

1.2 Facility Overview

1.2.1 Facility Location

The WIPP is located in Eddy County in southeastern New Mexico, 26 miles (41.6 km) east of Carlsbad as shown in Figure 1.2-1. The 16 sections of land set aside for the WIPP includes an area of 10,240 acres (4144 hectares). The WIPP is located in an area of low population density with fewer than 30 permanent residents living within a ten-mile radius. The area surrounding the facility is used primarily for grazing, and development of potash, oil, salt, and gas resources. Development of these resources results in a transient population (non-permanent) consisting principally of workers at three potash mines that are located within ten miles of the WIPP. The largest population center nearest the WIPP is the city of Carlsbad with approximately 25,000 inhabitants. Two smaller communities, Loving (population approximately 1300) and Malaga (population approximately 200), are located about 20 miles (32 km) southwest of the facility. As the result of the WIPP Land Withdrawal Act of 1992[1], no mineral resource development is allowed within the WIPP Site Boundary (with the exception of existing leases).

1.2.2 Facility Design

The WIPP is designed to receive and handle a maximum of 10,000 ft^3/yr (283 m^3/yr) RH TRU waste. The WIPP facility is designed to have a total disposal capacity for TRU waste of 6.2×10^6 ft^3 (1.76×10^5 m^3). Current design is that RH waste will be packaged in steel containers which are placed inside shielded road casks then transported to the WIPP facility. The WIPP facility has sufficient capacity to handle the 250,000 ft^3 (7,080 m^3) of RH TRU that was established in the ROD[2] as a total volume. In addition, the WIPP Land Withdrawal Act of 1992[1] limits the total RH TRU activity to 5.1 E 06 Curies.

RH TRU wastes will be disposed in the 100 acre (40.5 hectares) disposal area on a horizon located 2,150 ft (655 m) beneath the surface in a deep, bedded salt formation. Waste will be transferred from the surface to the disposal horizon through a waste shaft using a hoisting arrangement. The disposal phase is currently scheduled to last for 35 years.[3, 4]

The placement of CH and RH waste in the WIPP will be for the purpose of permanent disposal with no intent to retrieve. However, if in the future it is determined that recovery of disposed waste is required, prior to commencement of recovery operations: (1) principal design and safety criteria for structures, systems, and components (SSCs) that protect the public, workers, and the environment from hazards posed by recovery shall be developed, and (2) those hazards associated with the recovery design and process will be analyzed to address recovery.

The WIPP is divided into three functional areas: surface structures, shafts, and subsurface structures as shown in Figure 1.2-2. The WIPP surface structures (Figure 1.2-3a) accommodate the personnel, equipment, and support services required for the receipt, preparation, and transfer of waste from the surface to the underground. The surface structures are located in an area within a perimeter security fence. The primary surface operations at the WIPP are conducted in the Waste Handling Building (WHB), which is divided into the CH TRU waste handling area, the RH TRU waste handling area, and support areas.

The current design of the RH TRU waste handling area includes the following; a RH Bay for cask receiving and preparation; the Cask Unloading Room (CUR) where the 72B cask is prepared for and lowered into the Transfer Cell and where the waste drums are removed from the 10-160B cask and lifted into the Hot Cell; the Hot Cell where radiological surveys on each drum and identity verification of each drum is performed before being placed into facility canisters (max of three drums per canister) and where the facility canisters are lowered into a shielded insert in the Transfer Cell; and the Transfer Cell where

the canister in a 72B cask or the facility canister in a shielded insert are transferred (raised) into the facility cask. During the lift from the 72B cask, radiological surveys and identity verification as well as a physical inspection is performed on the 72B canister; the facility Cask Loading room where the facility cask is loaded with either a 72B canister or a facility canister and then positioned on the waste hoist conveyance for transfer to the underground.

The vertical shafts extending from the surface to the underground horizon (Figure 1.2-2) are the waste shaft, the salt handling shaft, the exhaust shaft, and the air intake shaft. These shafts are lined from the shaft collar to the top of the salt formation, about 850 ft (259 m) below the surface, and are unlined through the salt formation. The shaft lining is designed to withstand the full piezometric water pressure associated with any surrounding water-bearing formation. The waste shaft is located between the CH TRU and RH TRU areas in the WHB. It is nominally 19 feet (5.8 m) in diameter and is serviced by a hoist utilizing a hoist cage that is primarily used for transportation of CH TRU and RH TRU wastes from the surface to underground disposal areas.

The underground areas (Figure 1.2-4) consist of the waste disposal area and the support area. The disposal area has four main entries (two entries for fresh air and two entries for return air) and a number of disposal rooms. The layout of the shafts and entries allows mining and disposal operations to proceed simultaneously. The first disposal panel is used to dispose waste while the next panel is being mined. Successive stages follow in a similar manner.

A typical disposal panel consists of seven disposal rooms. Each room is 33 ft (10 m) wide, 13 ft (4 m) high, and 300 ft (91.5 m) long. The RH waste canisters are placed in 14 ft (4.3 m) long horizontal bore holes on 30 in (0.8 m) centers in the walls (ribs) of the disposal rooms. The disposal rooms are separated by pillars of salt 100 ft (30.5 m) wide and 300 ft (91.5 m) long. Panel entries at the end of each of these disposal rooms are also 33 ft (10 m) wide and 13 ft (4 m) high and will be used for waste disposal, except for the first 200 ft (61 m) from the main entries which are 22 ft (6.7 m) wide by 14 ft (4.3 m) high. This first 200 ft (61 m) will be used for installation of panel closure systems.

1.2.3 Facility Operations

The principal operations of the WIPP involve the receipt of TRU and TRU mixed waste and emplacement in the underground salt repository for disposal. A pictorial view of the 72B RH TRU waste handling process is shown in Figure 4.3-1, while the 10-160B waste handling process is shown in Figure 4.3-2.

RH TRU waste will be shipped to the WIPP in Nuclear Regulatory Commission (NRC) certified shipping packages (72B and 10-160B road casks). The RH waste handling process begins when the truck arrives at the WIPP gate. After the RH TRU road cask is surveyed for contamination and shipping documentation confirmed, the loaded road cask trailer is staged in the parking lot adjacent to the RH entrance to the WHB.

The loaded trailer is moved into the WHB RH bay. Impact limiter(s) are removed before the 72B and/or 10-160B road cask is transferred to their respective road cask transfer car. The outer containment vessel (OCV) lid of the 72B road cask is removed or the bolts loosened on the primary lid of the 10-160B road cask and initial waste handling activities are performed before the road cask is transported to the CUR. The CUR crane lifts the loaded 72B road cask from the road cask transfer car and lowers it into the Transfer Cell onto the shuttle car. In the Transfer Cell, the inner containment vessel lid of the 72B road cask is removed, the identity of the waste cannister is confirmed and remote radiological surveys are performed. The 10-160B road cask is moved to the CUR where the payload of ten 55-gal drums of RH waste is lifted into the Hot Cell by the Hot Cell 15-ton crane. Radiological surveys are performed on

each drum and the identity of each drum is confirmed. Three RH waste drums are loaded into a WIPP facility canister which is lowered into the shielded insert, installed on the shuttle car, located in the Transfer Cell. The grapple hoist in the Facility Cask Loading Room lifts the waste canister into the facility cask. The loaded facility cask is moved into the waste shaft's hoist cage for transfer to the disposal horizon.

At the disposal horizon, the facility cask is transported by a forklift into the waste disposal room. In the disposal room, the waste canister is removed from the facility cask, emplaced in a horizontal borehole and then a shield plug is installed in the borehole. Details of the RH waste operations are provided in Section 4.3.

The RH waste, consisting of radiologically hazardous and chemically hazardous material, received for placement in the WIPP facility must conform with the RH Waste Acceptance Criteria (WAC). Draft criteria have been prepared (RH Draft WAC [5]) and are currently being reviewed. These criteria will be formalized prior to receipt of RH waste. The purpose of the RH WAC is to summarize the waste acceptance criteria that RH-TRU waste must meet before it can be transported to, managed, and disposed of at the WIPP. These criteria serve as the DOE's primary directive for ensuring that TRU waste is managed and disposed of in a manner that protects worker and public health and safety and the environment.

The operational philosophy at the WIPP facility is to start radiologically clean and stay radiologically clean. As a canister is removed from the 72B road cask or drums removed from the 10-160B road cask, contamination surveys, damage inspections, and identity verifications are performed. If any identity discrepancies are found and/or any levels of radiation, contamination, or significant damage in excess of acceptance criteria are found, actions will be taken in accordance with approved procedures. Also, any local area of contamination may be decontaminated prior to continuation of the waste handling process.

References for Section 1.2

1. Public Law 102-579, Waste Isolation Pilot Plant Land Withdrawal Act, October 1992 [as amended by Public Law 104-201].

2. U.S. Department of Energy, 46 FR 9162, Record of Decision, Waste Isolation Pilot Plant, January 1981.

3. DOE/NTP-96-1204, The National Transuranic Waste Management Plan, U. S. Department of Energy, Carlsbad Field Office.

4. DOE/EIS-0026-S-2, WIPP Disposal Phase Final Supplemental Environmental Impact Statement, U. S. Department of Energy, Carlsbad Area Office, September 1997.

5. DOE/WIPP-Draft-3123, Remote-Handled Waste Acceptance Criteria for the Waste Isolation Pilot Plant.

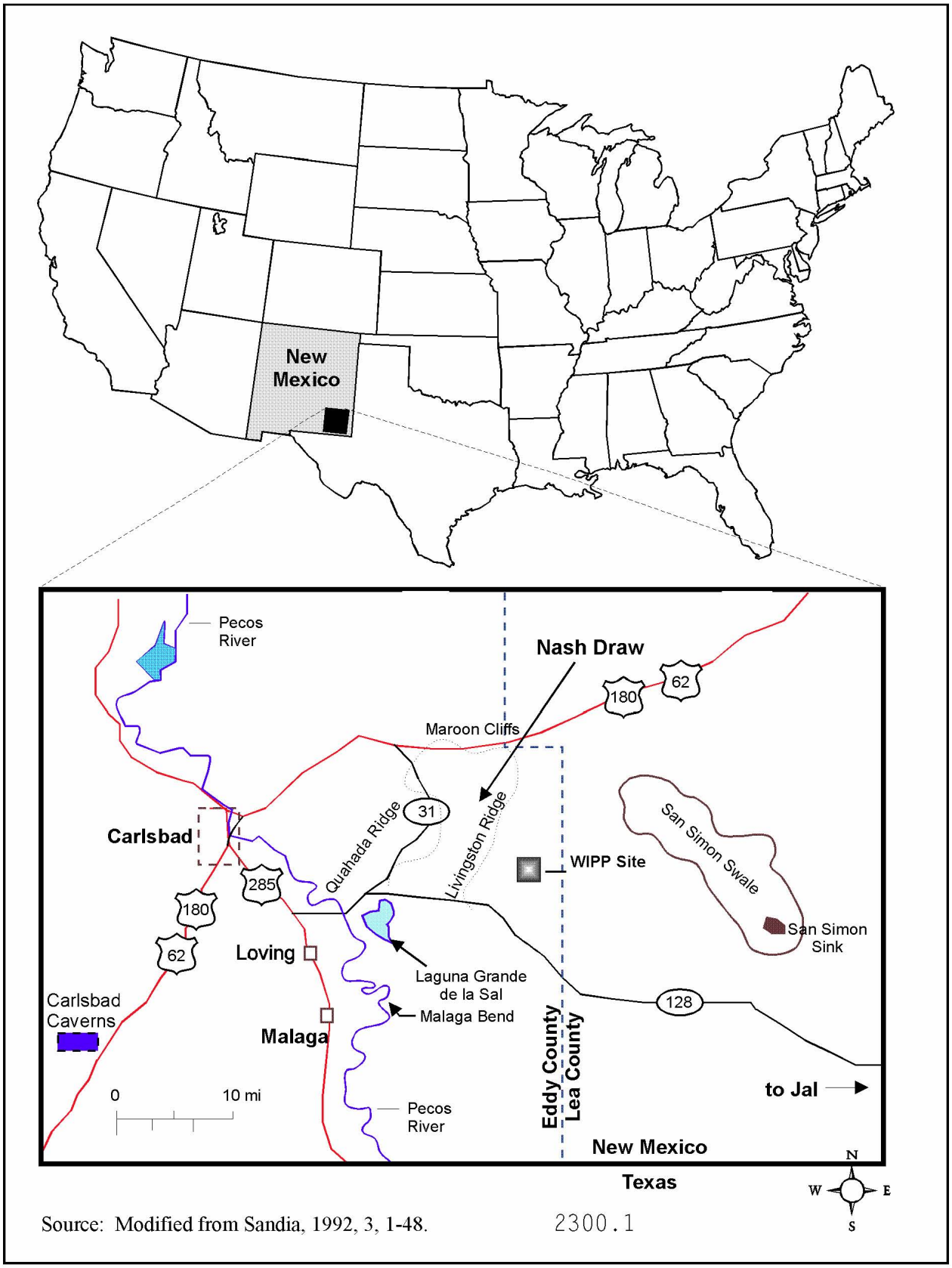

Figure 1.2-1, WIPP Location in Southeastern New Mexico

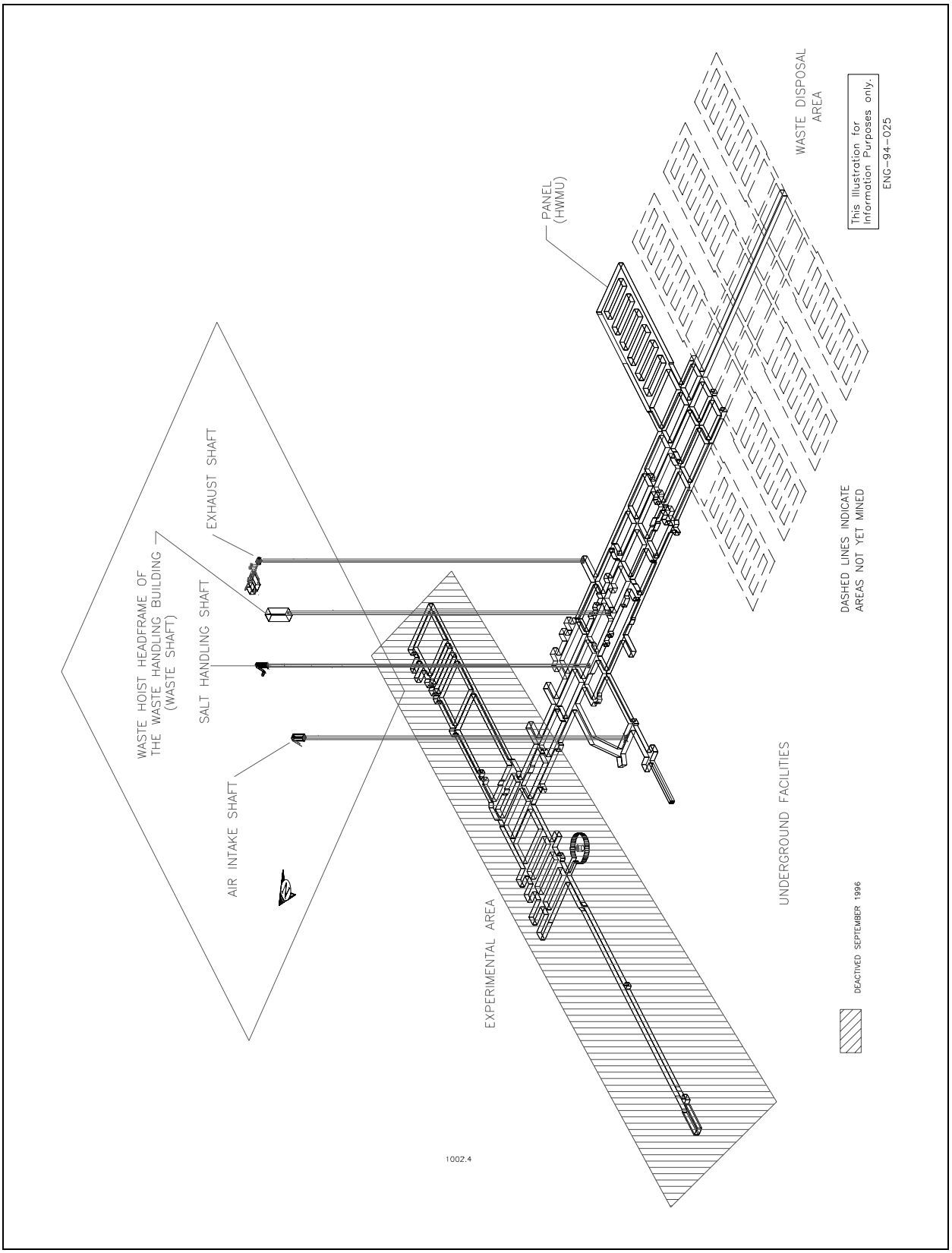

Figure 1.2-2, Spatial View of the WIPP Facility

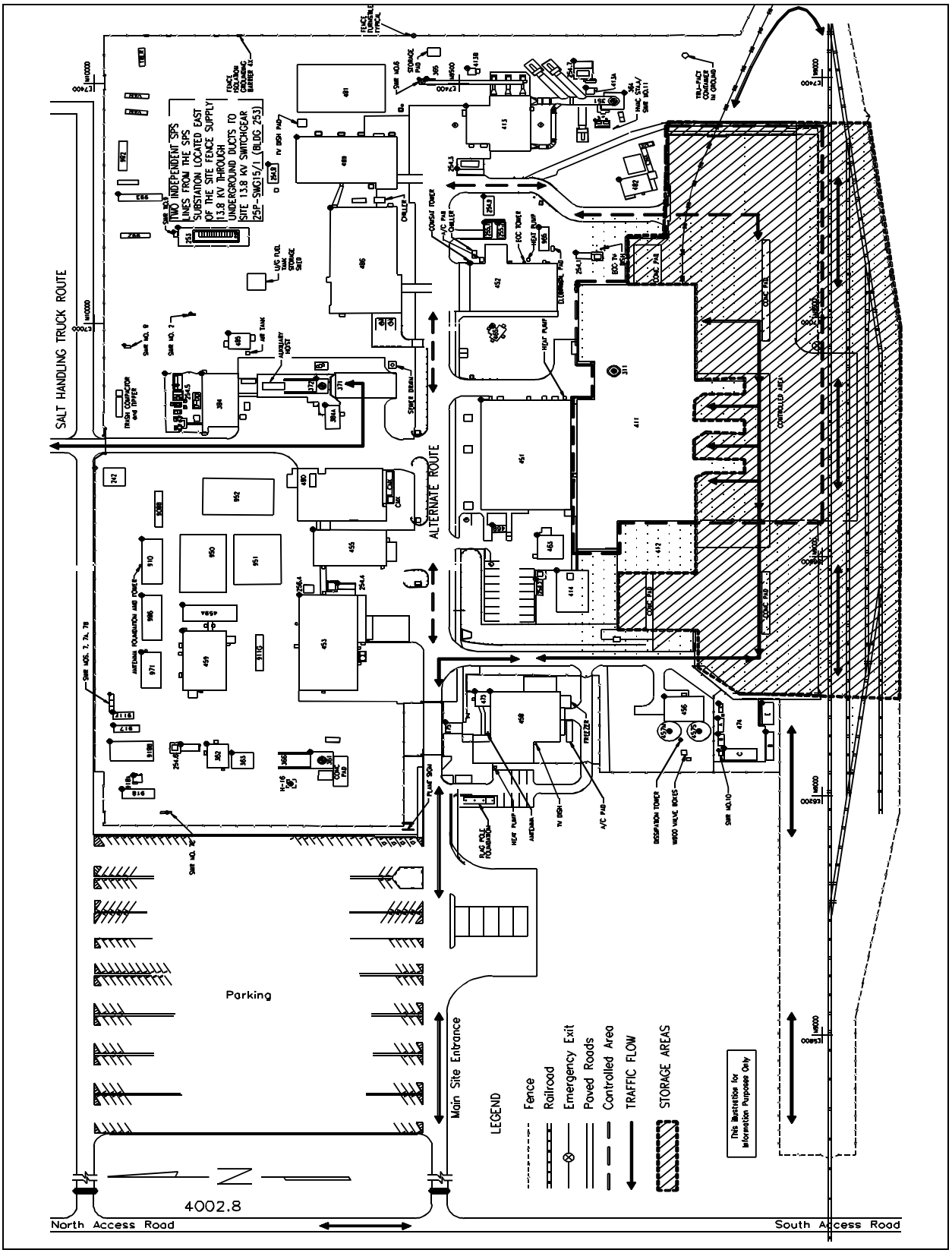

Figure 1.2-3a, WIPP Surface Structures

BLDG./ FAC. #	DESCRIPTION
242	NORTH GATEHOUSE
253	13.8 KV SWITCHGEAR 25P-SWG15/1
254.1	AREA SUBSTATION NO.1 25P-SW15.1
254.2	AREA SUBSTATION NO.2 25P-SW15.2
254.3	AREA SUBSTATION NO.3 25P-SW15.3
254.4	AREA SUBSTATION NO.4 25P-SW15.4
254.5	AREA SUBSTATION NO.5 25P-SW15.5
254.6	AREA SUBSTATION NO.6 25P-SW15.6
254.7	AREA SUBSTATION NO.7 25P-SW15.7
254.8	AREA SUBSTATION NO.8 25P-SW15.8
254.9	AREA SUBSTATION NO.9 25P-SW15.9
255.1	BACKUP GENERATOR #1 25-PE 503
255.2	BACKUP GENERATOR #2 25-PE 504
311	WASTE SHAFT
351	EXHAUST SHAFT
361	AIR INTAKE SHAFT
362	AIR INTAKE SHAFT/HOIST HOUSE
363	AIR INTAKE SHAFT/WINCH HOUSE
364	EFFLUENT MONITORING INSTRUMENT SHED A
365	EFFLUENT MONITORING INSTRUMENT SHED B
366	AIR INTAKE SHAFT HEADFRAME
371	SALT HANDLING SHAFT
372	SALT HANDLING SHAFT HEADFRAME
384	SALT HANDLING SHAFT HOISTHOUSE
384A	SALT HOIST OPERATIONS
411	WASTE HANDLING BUILDING
412	TRUPACT MAINTENANCE FACILITY
413	EXHAUST FILTER BUILDING
413A	EFFLUENT MONITORING ROOM A
413B	EFFLUENT MONITORING ROOM B
414	WATER CHILLER FACILITY & BLDG
451	SUPPORT BUILDING
452	SAFETY & EMERGENCY SERVICES FACILITY
453	WAREHOUSE/SHOPS BUILDING
455	AUXILLIARY WAREHOUSE BUILDING
456	WATER PUMPHOUSE

BLDG./ FAC. #	DESCRIPTION
457N	WATER TANK 25-D-001A
457S	WATER TANK 25-D-001B
458	GUARD AND SECURITY BUILDING
459	CORE STORAGE BUILDING
459A	SANDIA ANNEX
463	COMPRESSOR BUILDING
465	AUXILIARY AIR INTAKE
468	TELEPHONE HUT
473	ARMORY BUILDING
474	HAZARDOUS WASTE STORAGE FACILITY
474A	HAZARDOUS WASTE STORAGE BUILDING
474B	HAZARDOUS WASTE STORAGE BUILDING
474C	OIL & GREASE STORAGE BUILDING
474D	GAS BOTTLE STORAGE BUILDING
474E	HAZARD MATERIAL STORAGE BUILDING
474F	WASTE OIL RETAINER
475	GATEHOUSE
480	VEHICLE FUEL STATION
481	AUXILIARY WAREHOUSE
482	EXHAUST SHAFT HOIST EQUIP. WAREHOUSE
485	COMPRESSOR BUILDING
486	ENGINEERING BUILDING
489	TRAINING BUILDING
H-16	SANDIA TEST WELL (NOT IDENTIFIED)
908B	HBS TRAILER
910	ENVIRONMENTAL MONITORING TRAILER
911G	SANDIA OFFICES TRAILER

BLDG./ FAC. #	DESCRIPTION
917	AIS MONITORING
918	VOC TRAILER
918A	VOC AIR MONITORING STATION
918B	VOC LAB TRAILER
950	WORK CONTROL TRAILER
951	PROCUREMENT / PURCHASING
952	TRAILER (7-PLEX)
965	SAMPLE PREPARATION LAB
971	HUMAN RESOURCES TRAILER
982	TRAILER
986	PUBLICATIONS & PROCEDURES TRAILER
992	SANDIA CALIBRATION LAB TRAILER
993	SANDIA OFFICES TRAILER
SWR NO.1	SWITCHRACK NO. 1
SWR NO.2	SWITCHRACK NO. 2
SWR NO.3	SWITCHRACK NO. 3
SWR NO.6	SWITCHRACK NO. 6
SWR NO.7,7A,7B	SWITCHRACK NO. 7, 7A, 7B
SWR NO.7C	SWITCHRACK NO. 7C
SWR NO.8	SWITCHRACK NO. 8
SWR NO.9	SWITCHRACK NO. 9
SWR NO.10	SWITCHRACK NO. 10
SWR NO.11	SWITCHRACK NO. 11

4003.8

This Illustration for Information Purposes Only

Figure 1.2-3b, Legend for Figure 1.2-3

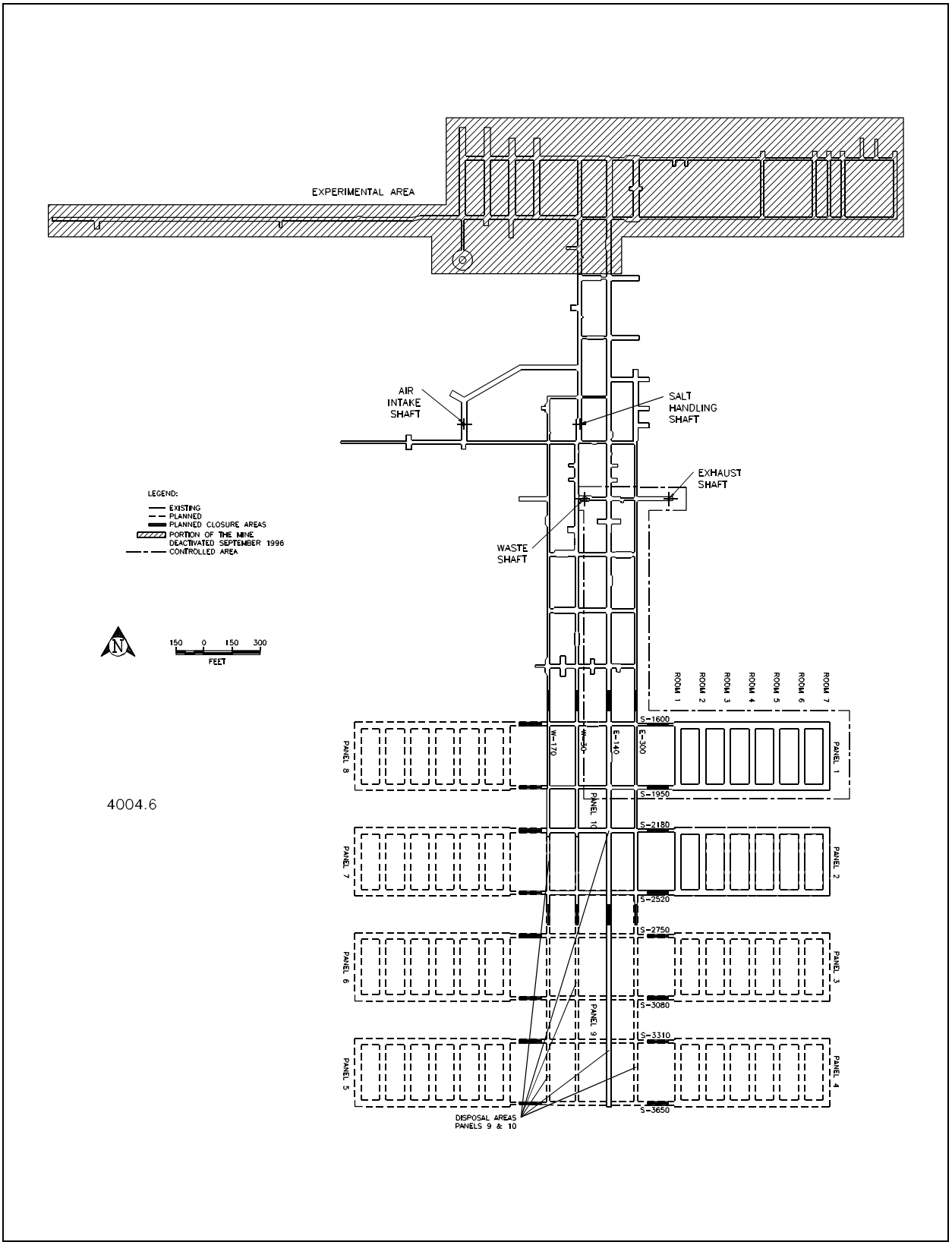

Figure 1.2-4, Underground Subsurface Areas

This page intentionally blank

1.3 Safety Analysis Overview and Conclusions

1.3.1 Safety Analysis Report Strategy and Approach

The WIPP RH PSAR is prepared to satisfy the commitments in the Working Agreement for Consultation and Cooperation[1] (WACC) (Article III, Section C and Article IV, Section K, known as the Working Agreement) between the State of New Mexico and the U.S. Department of Energy. The initial draft was written to ensure compliance with the requirements of DOE Orders 5480.21, Unreviewed Safety Questions,[2] 5480.22, Technical Safety Requirements,[3] 5480.23, Nuclear Safety Analysis Reports,[4] and 420.1, Facility Safety.[5] This draft of the RH PSAR is prepared to comply with the methodology and requirements of 10 CFR 830, Nuclear Safety Management [6](including Parts 830.203, Unreviewed Safety Question Process, 830.204, Documented Safety Analysis, 830.205, Technical Safety Requirements, and 830.206, Preliminary Documented Safety Analysis),[6] and its implementing standards DOE-STD-1027-92[7] and DOE-STD-3009-94[8]. A "Preliminary" SAR generally refers to a facility in the design, construction, or preoperational stage. This PSAR represents a statement and commitment by the DOE that the WIPP can be operated safely and at acceptable risk.

In accordance with the requirements of 10 CFR 830.204 [6], the SAR documents the safety analyses that develop and evaluate the adequacy of the safety bases. The safety bases are defined by 10 CFR 830.3, Definitions,[6] as: "The documented safety analysis and hazard controls that provide reasonable assurance that a DOE nuclear facility can be operated safely in a manner that protects workers, the public, and the environment."

This PSAR establishes and evaluates the adequacy of the WIPP RH TRU safety bases in response to plant normal and abnormal operations, and postulated accident conditions. The WIPP safety bases analyzed include; (1) the adequacy of the design basis of WIPP RH structures, systems, or components (SSCs), and the application of appropriate engineering codes, standards, and quality assurance requirements, (2) the selection of principal design and safety criteria, (3) the assignment of preliminary Technical Safety Requirements (PTSRs), and (4) the management, conduct of operations, and institutional dimensions of safety assurance.

1.3.1.1 Facility Hazard Classification

The hazard classification was determined in accordance with DOE-STD-1027-92, Hazard Categorization and Accident Analysis Techniques for Compliance with DOE Order 5480.23, Nuclear Safety Analysis Reports.[7] A deterministic approach was taken without considering facility segmentation, form location or dispersibility of the material at risk. The material at risk for the determination of the classification was defined as the maximum radiological contents of a single RH waste container as derived in Chapter 5. The WIPP Facility is classified as a Hazard Category 2 facility based on this single waste canister inventory in comparison to the threshold quantities provided in Table A-1 of DOE-STD-1027-92.[7]

1.3.1.2 Design and Operation Descriptions

The System Design Descriptions[9] (SDDs) for the WIPP provide the design information for Chapter 3, Principal Design and Safety Criteria, and Chapter 4, Facility Design and Operation. The SDDs provide the most currently available final engineering design information on waste emplacement operations throughout the disposal phase up to the point of permanent closure.

The Woking Agreement for Consultation and Cooperation (WACC Agreement)[1] SAR requirements for Long Term Waste Isolation Assessment, are summarized in Chapter 5. The Long Term Waste Isolation Assessment is covered in the WIPP Compliance Certification Application (CCA).[10]

The systematic evaluation of the human factors[11] associated with the design and operation of the WIPP to meet the requirements of DOE Order 5480.23[4] (10 CFR 830.204 [6]) and DOE-STD-3009-94[8] is discussed in Chapter 4. The evaluation determined that policies and procedures have been provided to shift personnel concerning actions to be taken in a potential accident environment, and adequate procedures are available for follow up response.

The WIPP site description in terms of geology, hydrology, meteorology, geography, demography, nearby facilities, and cultural and natural resources are based on information provided in the WIPP CCA.[10] Chapter 2 provides a detailed description of the site characteristics.

1.3.1.3 RH Waste Handling Hazard Analysis

The WIPP RH TRU waste handling processes were qualitatively evaluated in two Hazard and Operability Studies (HAZOPs),[12, 13] one for each type road cask (Summarized in Appendix C). This systematic approach to hazard analysis was conducted by leaders knowledgeable in the HAZOP methodology and consisted of personnel from various disciplines familiar with the design and operation of the RH TRU handling processes (HAZOP Team). The HAZOP Teams identified deviations from the intended design and operation of the RH waste handling systems that could: (1) result in process slowdown or shutdown, (2) result in worker injury or fatality, and (3) result in the release of radiological and non-radiological materials from waste containers.

Both HAZOP Teams assigned a qualitative consequence and frequency ranking for each deviation. A hazard evaluation ranking mechanism utilized the frequency and the most significant consequences to separate the low risk hazards from high risk hazards that may warrant additional quantitative analysis of consequences to the maximally exposed individual (MEI), non-involved worker, and immediate worker. Based on this ranking approach HAZOP[12, 13] deviations whose combined hazard rank were identified to be of moderate or high risk (Table 5.1-10) were selected for quantitative analysis in Section 5.2 to: (1) verify and document the basis for the qualitative frequency and consequence assignments in the HAZOP,[12, 13] and (2) identify the need for safety (safety-class or safety-significant) SSCs and PTSRs.

The HAZOPs[12, 13] replace previous hazards analyses in existing documentation including the Final Environmental Impact Statement (FEIS),[14] and the Final Supplement Environmental Impact Statement (SEIS),[15] for the purposes of identifying initiating events for quantitative accident analysis in Section 5.2. These documents were reviewed to ensure that all hazards associated with RH TRU waste handling were identified in the HAZOPs.[12, 13]

The HAZOP Team concluded that:

- Safeguards currently exist at the WIPP to prevent or reduce the frequency of postulated accidents from occurring. Identified safeguards include facility and equipment design, procedures, training, preventative maintenance and inspection, and administrative controls including the RH Waste Acceptance Criteria (WAC)[16] (Table 5.1-10, and Appendix C).
- Mitigation exists to reduce the consequences of any postulated accident to acceptable levels. Identified mitigation includes confinement/ventilation systems and associated HEPA filtration systems (Table 5.1-10, and Appendix C).

Based on the results of the HAZOP,[12, 13] operational events are binned into three accident categories (fire, explosion, and breach of waste canister/drum). Since breach of waste canisters may occur due to drop or vehicle impact, accidents involving both of these breach mechanisms are evaluated. Accidents involving waste container drops are further evaluated based on the energy involved due to drop height. Due to the differences in release and dispersion mechanisms possible, accidents of each category are evaluated for surface and underground areas of the facility. Natural initiating events including seismic and tornado are also evaluated.

Since the performance of the HAZOPs, periodic updates of the WIPP Fire Hazards Analysis Report (FHA)[24] have been performed to meet the requirements of DOE O 420.1.[5] The updated FHA confirms the previous evaluation that the frequency of a room or structural fire, as an accident in the WHB resulting in a direct release of radioactive material from the waste containers engulfed in the fire, is beyond extremely unlikely (<1E-06/yr). The updated FHA confirmed also that due to the limited combustible fire loading of the WHB waste processing rooms and the WHB design features, worse case fire accidents will not thermally challenge waste container integrity.

1.3.1.4 Defense in Depth

The WIPP defense-in-depth provides three layers of defense which include conservative design of the facility's SSCs, protection against anticipated operational occurrences and unlikely events, and passive controls that may be on line continuously or automatically/manually activated.

The objective of the first layer of WIPP defense-in-depth is **accident prevention**. The reduction of risk to both workers and the public from WIPP RH TRU waste handling and emplacement operations is primarily achieved by reducing the frequency of occurrence of postulated accidents. The conservative design of the facility's SSCs, with operations conducted by personnel trained and qualified to the standards set forth in approved procedures, provides the first layer. Specific preventative measures are identified in Appendix C for each postulated deviation as identified in the HAZOP,[12, 13] and in Table 5.1-10 for each deviation considered for quantitative accident analysis.

Additionally, accident prevention for process inherent events such as spontaneous ignition fire, is achieved administratively through the RH WAC[16] which restricts hazardous waste elements (such as the presence of pyrophorics) which may be initiating events for accidents. The following provide administrative controls (ACs) to prevent the risk from postulated accidents from being unacceptable: (1) RH WAC limits on the radionuclide and fissile content of each waste canister/drum; (2) RH WAC limits on hazardous waste such as non-radionuclide pyrophorics, explosives, and compressed gases, (3) waste canister/drum integrity provisions ensure the robustness reflected in the waste canister accident release analyses, and (4) criticality safety is a designed in-storage and handling configuration that ensures that active criticality control is not required.

Prevention of human error as an initiating event is achieved by the extensive training and qualification programs, operational procedures, and conduct of operations programs. PTSR ACs are derived in Chapter 6 and required in the WIPP PTSR Document (Attachment 1 to the PSAR) to ensure that these programs are maintained, and operations continue to be conducted with highly qualified and trained personnel using current approved procedures.

The second layer of defense-in-depth provides protection against anticipated and unlikely operational events that might occur in spite of the protection afforded by the first layer of defense. The second defense layer is characterized by detection and protection systems, and controls that: (1) indicate component, system, or process performance degradation created by compromises of the first layer, and (2) provide adequate mitigation and accommodation of the consequences of those operational accidents which may occur. The WHB and underground radiation monitoring systems, the HEPA filtration systems, and the WIPP emergency management program [25] provide this layer of defense-in-depth.

The third layer of defense-in-depth supplements the first two layers by providing protection against extremely unlikely operational, natural phenomena, and external events. These events represent extreme cases of failures and are analyzed in Section 5.2.3 using conservative assumptions and calculations to assess the radiological and non-radiological effects of such accidents on the maximally exposed individual (MEI), non-involved worker, and immediate worker to verify that a conservative design basis has been established. These accidents include waste canister/drum fire and waste hoist failure.

1.3.1.5 Waste Acceptance Criteria

The waste accepted for placement in the WIPP facility must conform with the RH WAC[16] unless an exception to the RH WAC[16] has been approved as a result of examination in relation to the SAR. Based on the hazards and accident analyses presented in Chapter 5, specific waste characteristics used in the development of the safety analysis, are required in Chapter 6 to be incorporated as RH WAC Operations and Safety Requirements. A PTSR AC for Waste Characteristics require that the safety analysis criteria be incorporated into the RH WAC.[16]

The RH WAC[16] establishes minimum criteria that the waste must meet, and limits that cannot be exceeded in order to ensure that TRU waste is managed and disposed of in a manner that protects worker and public health and safety and the environment. The following waste is unacceptable for management at the WIPP facility:

- Ignitable, reactive, and corrosive waste
- Liquid wastes (all waste must meet the RH WAC [16] criteria regarding residual liquid content)
- Compressed gases
- Incompatible waste (waste must be compatible with backfill, seal and panel closure materials, canister, road cask, facility cask, and as well as with other waste)
- Headspace-gas VOC concentrations resulting in average annual emissions not protective of human health and the environment
- Wastes with EPA codes not listed on Hazardous Waste Facility Permit, Table II.C [26].
- Waste with equal to or more than 50 ppm (50 mg/L) polychlorinated biphenyls (PCB)

The WIPP facility will not accept waste that exhibits the characteristics of ignitability, reactivity, or corrosiveness.

Estimates of the radiological waste canister inventory for safety analysis calculations were obtained by using the radionuclide inventory by final waste form, stored waste volume, and waste site included on the June, 1996 query of the WIPP Transuranic Waste Baseline Inventory Report (BIR)[27] database.

This PSAR has evaluated a reasonable range of Container Inventories (CIs) for "untreated" (not solidified, vitrified, or overpacked) RH TRU waste. Based on a maximum reasonable CI, used in conservative safety analysis with updated airborne release and respirable fractions and the radionuclide limitations for untreated waste, the potential dose consequences due to inhalation by the non-involved worker, the immediate workers, and the MEI from operational accidents with frequencies greater than 1E-06/yr are within the risk evaluation guidelines in Section 5.2.2.

The adequacy of the WIPP facility design and operational administrative controls is evaluated, based on the accident results in Section 5.2.

The source term equation radiological CI used in the accident analyses, is based on the analyses in Section 5.1.2. DOE-STD-3009-94[8] and its Appendix A state that the source term material at risk [MAR = CI * containers damaged (CD)] should "represent a reasonable maximum for a given process or activity, as opposed to artificial maximums unrepresentative of actual conditions."

As described in Section 5.1.2, the maximum plutonium-239 equivalent Curies (PE-Ci) radionuclide inventory for a 72B canister loaded with non-containerized waste (direct loaded) is 80 PE-Ci. The maximum radionuclide inventory for a 72B canister loaded with waste contained in three 55-gallon drums is 240 PE-Ci. The maximum radionuclide inventory for a 10-160B road cask containing ten 55-gallon drums of waste is 20 PE-Ci.

The adequacy of these assumptions and the WIPP RH TRU facility design basis are evaluated in detail based on the accident results in Section 5.2.3. Receipt of waste for disposal at WIPP that does not meet the applicable Operations and Safety Requirements of the RH WAC[16] will first require the performance of an Unreviewed Safety Question Determination (USQD) in accordance with the requirements of 10 CFR 830.203, Unreviewed Safety Question Process.[6]

1.3.1.6 Nuclear Criticality

The intent of a criticality safety program is to prevent the accumulation of fissile and fissionable material and neutron moderating or reflecting materials in quantities and configurations that could result in an accidental nuclear criticality.

To ensure adequate margins of criticality safety for adherence to DOE O 420.1,[5] the WIPP facility was designed so that during each operation involving fissile material K_{eff} does not exceed a value of 0.947 (at the 95 percent probability level) for the most reactive set of conditions considered credibly possible. The calculation of K_{eff} includes the effect of neutron interaction and reflection between fissile elements and dimensional variations resulting from fabrication tolerances and changes due to corrosion and mechanical distortion. As discussed below, these calculations indicate the combination of conditions enabling the K_{eff} limit of 0.947 to be exceeded for the RH waste forms handled at the WIPP facility is incredible.

The WIPP nuclear criticality program elements consist of mass limits control, TRU waste disposal configuration control, and analytical verification of subcriticality.

Mass Limits Control

The WIPP RH WAC[16] limits the fissile or fissionable radionuclide content of RH TRU waste, including allowance for measurement errors, to 325 Fissile-Gram Equivalent (FGE) for a RH waste canister.

TRU Waste Disposal Configuration Control

In addition to the mass limits control, geometry controls are required for the emplacement and/or in-transit handling disposal configurations. Canisters will be stored in horizontal positions in the walls of the Underground disposal rooms with an analyzed minimum center-to-center spacing of 30 in (76 cm).[17]

RH TRU Nuclear Criticality Safety Analysis

In compliance with DOE O 420.1,[5] a criticality analysis[17] was performed to ensure that no credible criticality accident could occur at the WIPP. The analysis was based on the mass limit control and geometry control, with additional conservative assumptions in terms of; isotopic content, density and configuration modeling, moderation, and reflection. Further, for the RH waste analysis, it was assumed that the waste package storage array is infinite in both horizontal directions.

The results of the WIPP RH TRU criticality analysis[17] indicate that, for each of the conditions analyzed, the calculated effective multiplication factor, K_{eff}, is less than 0.95 including uncertainties at 95 percent probability at 95 percent confidence level. Accordingly, no credible criticality hazard exists at the WIPP for RH TRU operations.

DOE Order 420.1[5] requires additional analysis of nuclear criticality safety. The WIPP RH TRU criticality analysis [17] was examined for compliance with the order and all the applicable requirements for the order in performance of criticality analysis were complied with within the analysis.

The WIPP nuclear criticality safety program elements were reviewed to ensure compliance with the six mandatory American Nuclear Society ANSI/ANS nuclear criticality safety standards as the Order requires. The six mandatory standards are: ANSI/ANS-8.1,[18] 8.3,[19] 8.5,[20] 8.7,[21] 8.15,[22] and 8.19.[23]

The WIPP nuclear criticality safety program elements are found to be in compliance with the requirements of ANSI/ANS-8.1, Nuclear Criticality Safety in Operations with Fissionable Materials Outside Reactors,[18] and ANSI/ANS-8.15, Nuclear Criticality Control of Special Actinide Elements,[22] in regard to: mass control, geometry control, and performance of criticality analyses.

The criticality-related administrative control provisions were determined to be in compliance with ANSI/ANS-8.19, Administrative Practices for Nuclear Criticality Safety.[23]

Since it has been established by analyses[17] that a criticality accident is beyond extremely unlikely (frequency ≤ 1 E-06/yr) at the WIPP, ANSI/ANS-8.3,[19] a Criticality Accident Alarm System, is not applicable as called for in the Order.

The two facility-specific standards, ANSI/ANS-8.5, Use of Borosilicate-Glass Raschig Rings as a Neutron Absorber in Solutions of Fissile Material,[20] and ANSI/ANS-8.7, Guide for Nuclear Criticality Safety in the Storage of Fissile Materials,[21] are not applicable to the WIPP.

The existing WIPP nuclear criticality safety program elements are in compliance with the DOE Order 420.1[5] mandatory criticality safety standards.

1.3.1.7 Atmospheric Dispersion

The meteorological conditions used to evaluate both radiological and non-radiological doses are based on Nuclear Regulatory Guide (NRG) 1.145,[28] "Atmospheric Dispersion Models for Potential Accident Consequence Assessments at Nuclear Power Plants." NRG 1.145 [28] provides an NRC acceptable methodology to determine site-specific atmospheric dispersion coefficient (χ/Q'). χ/Q', is a ratio of the air concentration, χ, to the release rate, Q', and is used to determine the dose consequences for a receptor based on the quantity released (i.e., the source term), atmospheric conditions, and the distance to the receptor of interest. This methodology was used to develop the atmospheric dispersion coefficients to assess accidental releases from the WIPP Underground exhaust shaft and the WHB exhaust vent. Section 5.2.1.1 provides a more detailed explanation of atmospheric dispersion at WIPP. The model used is a straight line Gaussian plume which is appropriate to WIPP due to the terrain around the property protection area.

1.3.1.8 Significant Hazards

The accident analyses utilize currently available Rules, DOE Orders, standards and guidance as documented in DOE-STD-3009-94[8] and DOE-STD-1027-92[7], for determination of safety of the public, worker, and the environment. This PSAR provides an analysis of the potential hazards that may exist at the WIPP at the level of analytical effort based on the magnitude of the hazards and the complexity of the RH TRU waste operations conducted. The accidents selected for quantitative analysis are considered "Derivative Design Basis Accidents," (DBAs) as defined in DOE Standard 3009-94[8]. The DBAs are used to estimate the response of WIPP SSCs to "the range of accident scenarios that bound the envelope of accident conditions to which the facility could be subjected" in order to evaluate accident consequences. The following accidents were selected for analysis (the accidents identified with RH are for 72B waste operations, while those with the NC identifier are for 10-160B waste operations):

1. Operational Events

   Fires

   RH1 Fire in the Underground

   RH2 Fire in the WHB

   RH5 Fire followed by explosion in the Underground

   NC1 Fire in the Hot Cell

   NC2 Fire in the Underground

   NC5 Explosion followed by fire in the Hot Cell

   NC6 Fire followed by explosion in the Underground

   Waste Container Breaches

   RH3 Loss of containment in the WHB

   RH4-A Loss of containment in the Underground (waste hoist)

   RH4-B Loss of containment in the Underground (waste transport & emplacement)

   NC3 Loss of confinement in the WHB. This scenario is divided into sub-parts NC3-A, NC3-B, NC3-C, NC3-D, NC3-E, NC3-F, NC3-G, NC3-H, and NC3-I

   NC4 Loss of confinement in the Transfer Cell or Underground

2. Natural Events

RH6 Seismic event

RH7 Tornado event

NC7 Seismic Event

NC8 Tornado event

3. External Events

RH8 Aircraft Crash (applicable to both 72B and 10-160B operations)

It should be noted that accidents NC3-I and NC5 occurred in the Hot Cell and were initiated by the arc of the robotic electric welder that was to be used to weld the lid to a facility canister. The facility canister was redesigned, after the 10-160B HAZOP, so that the lid is mechanically attached to the facility canister and the welder was removed from service. As a result, accidents NC3-I and NC5 were not evaluated.

The principal purpose of the accident analysis is to evaluate the DBAs for the purposes of identifying safety (safety-class or safety-significant) SSCs and TSRs necessary to maintain accident consequences resulting from these DBAs to within the accident risk evaluation guidelines.

For the purposes of establishing safety SSCs, the consequences of these accidents are analyzed to a non-involved worker conservatively assumed to be 328 ft (100 m) from each release point, to the MEI located at the WIPP Exclusive Use Area boundary, and to the immediate worker located in the immediate vicinity of the accident. As discussed in Sections 5.1.2.1.2 and 5.1.7, the assessment of immediate worker consequences will ensure that the maximum allowable radionuclide inventory, in conjunction with the other layers of defense-in-depth, will preclude worker risk from being unacceptable. In the RH waste handling process, there are no immediate workers present in the Hot Cell or Transfer Cell. There is no immediate worker present in the Cask Unloading Room (CUR) when a 10-160B cask is processed.

1.3.2 Off-site and On-site Risk Evaluation Guidelines

DOE Standard 3009-94[8] states that use of a lower binning threshold such as 1E-06/yr is generally appropriate, but should not be used as an absolute cutoff for dismissing physically credible low frequency operational accidents without an evaluation of preventative or mitigative features. As such, identified DBAs whose frequencies are less than 1E-06/yr (beyond extremely unlikely) are also analyzed quantitatively for the sole purpose of providing perspective on the risk associated with the operation of the facility. The results of these analyses are found in the respective accident evaluation in Section 5.2.4.

Guidelines do not exist for the frequency range of beyond extremely unlikely (frequency $\leq$ 1E-06/yr). The consequences of accidents in that range are conservatively evaluated against the guidelines for the extremely unlikely range for the sole purpose of evaluating the risk associated with facility operations.

1.3.2.1 Radiological Evaluation Guidelines

Off-site radiological dose criteria for accident analyses have been well established by national standards through the licensing process of nuclear facilities regulated by the NRC. These criteria are based on the probabilities of occurrence of the accidents or events hypothesized for the accident analysis. For nuclear power plants, the operational accidents or events are classified as Plant Conditions (PC) in accordance with the estimated frequency of occurrence. ANSI/ANS-51.1[29] provides frequency based radiological dose values, recognized by the NRC, which are used by nuclear power plants, those values have adopted by the WIPP to compare accidental releases from postulated events to dose limits based on estimated frequency of occurrence. Table 1.3-1 summarizes the risk evaluation guidelines for the assessment of

off-site radiological exposures.

The same approach is used for the on-site risk evaluation guidelines as for the off-site (public) dose (Table 1.3-2). The on-site risk evaluation guidelines are greater than those for the public by assuming that entry onto the site implies acceptance of a higher degree of risk than that associated with the off-site public. This assumption is not considered remiss with regards to safety assurance because the on-site risk evaluation guidelines do not result in any health effects noticeable to exposed individuals at frequencies greater than 1E-4 event per year and would not result in any acute life-threatening effects.

For accidents with an estimated frequency between 1E-1 and 1E-2 event per year (anticipated) the limit is 5 rem (50 mSv) based on the allowable yearly worker exposure limits cited in 10 CFR 835.[30] For the estimated frequency range of 1 E-2 to 1 E-4 event per year (unlikely), the threshold is 25 rem (250 mSv) for the same reason the NRC provided in 10 CFR 100[31] for using it for design basis reactor accident calculations (i.e., value at which no significant health effects result).

Accidents with an estimated frequency range of 1E-4 to 1E-6 event per year (extremely unlikely) have a limit of 100 rem (1 Sv). The DOE Emergency Management Guide for Hazards Assessment[32] uses 100 rem (1 Sv) whole body exposure as a threshold for early severe effects. It also acknowledges that early severe effects would not actually be experienced for a 50-year dose of 100 rem (1 Sv) due to alpha emitters.

1.3.2.2 Radiological Evaluations

The models and assumptions used in the analysis for determining the amount of radioactivity released to the environment and the extent of exposure to the MEI, non-involved worker, and immediate worker are provided in Section 5.2. Activity releases to the environment are given for each postulated accident. Committed Effective Dose Equivalents (50 yr CEDE) were calculated for what are considered to be hypothetical individuals: the (1) MEI located at the WIPP Exclusive Use Area boundary and off-site public located at the site 16 section boundary, (2) non-involved worker located at 328 ft (100 m) from each release point, and (3) immediate worker located within the immediate vicinity of the accident.

Atmospheric transport is the only significant release and exposure pathway during normal operations and accident conditions during the disposal phase. Based on the site characteristics information in Chapter 2, surface water and groundwater transport from normal or accidental releases of radioactive material is not considered likely. Human exposure pathways from the airborne radioactive material include inhalation, air immersion, ingestion, and ground-shine. Radiological dose consequences are calculated assuming the inhalation pathway in CEDE.

External (ground-shine and air immersion) and ingestion dose calculations are not performed due to their minimal contribution to the Total Effective Dose Equivalent (TEDE). Section A.3 in Appendix A of DOE-STD-3009-94[8] states that the airborne pathway is of primary interest in the non-reactor nuclear facilities, therefore CEDE will be reported as the dose consequences for each accident evaluated. The calculated dose in CEDE is then compared to the non-involved worker and MEI radiological risk evaluation guidelines discussed in Section 5.2.2.

In evaluating hypothetical accidents, the safety analysis assumptions provide consequences which result in postulated releases that are overestimated rather than underestimated. The level of conservatism in each of the safety analysis variables is consistent with DOE-STD-3009-94[8] and bound the full range of possible scenarios, and provides reasonable assurance that when considering the variability in waste form, TRU activity content, and radionuclide distributions that: (1) the safety envelope of the facility is defined, (2) the design of the facility is adequate in response to the accident scenarios analyzed, and (3)

the PTSRs assigned will provide for the protection of the public, the worker, and the environment.

For accidents with an estimated frequency between 1E-2 to 1E-4 event per year (unlikely), the MEI limit is 6.5 rem (65 mSv) and the noninvolved worker limit is 25 rem (250 mSv). Accidents with an estimated frequency range of 1 E-4 to 1 E-6 event per year (extremely unlikely) have a MEI limit of 25 rem (250 mSv), while the non-involved worker limit is 100 rem (1 Sv). Since no current guidelines exist for immediate workers, the non-involved worker limit of 100 rem (1 Sv) is used for the immediate worker limits for all frequencies.

The quantitative frequency analysis (in Section 5.2.3) for each accident produced accidents in the three ranges, Unlikely, Extremely Unlikely, and Beyond Extremely Unlikely.

Additional quantitative frequency analyses in the form of event/fault tree analyses (Appendix D) were performed to identify SSCs, or processes that contribute most to the accident phenomena frequency for the purposes of verifying their adequacy or identifying improvements to reduce the accident frequency and therefore risk to immediate workers (as well as non-involved worker and MEI). Specific accidents evaluated in this manner were: RH3, RH4A, RH4B, RH6, RH7, NC1, NC3 (A-G), and NC5. With the exceptions of RH4B, RH6, NC1, and NC3(A - F), the event tree/fault tree analyses indicated that the no-mitigation frequency of the identified accidents occurring are beyond extremely unlikely (frequency ≤ 1E-06/yr).

Based on the RH accident source term and release mechanism analyses presented in Section 5.2.3 for accident scenarios with a frequency greater than 1E-06/yr (RH2, RH4-B, RH6, NC1, NC3 (A - F), NC4, NC7, and NC8), the calculated worst-case no-mitigation accident consequences to the non-involved worker, the MEI, and immediate worker were found to be below the accident risk evaluation guidelines for the unlikely range 25 rem (250 mSv) for the non-involved worker and 6.5 rem (65 mSv) for the MEI. The highest consequences to the non-involved worker are obtained from NC-1, with an estimated 8.2 rem (82 mSv) approximately 8 percent of 100 rem (1 Sv) guideline and 0.65 rem (.65 mSv) to the MEI approximately 3 percent of 25 rem (250 mSv) guideline. The highest consequences to the immediate worker are obtained from RH4-B, with an estimated 5.4 rem (54 mSv), approximately 5 percent of 100 rem guideline.

The MEI no-mitigation consequences for <u>all</u> accidents analyzed, regardless of frequency, were found to be below 25 rem (250 mSv) risk evaluation guideline. The worst-case for the 10-160B analysis calculated dose to an immediate worker is from NC3-G and NC3-H with an estimated 4.16 rem (41.6 mSv), which is below the on-site risk evaluation guidelines for the unlikely range (6.5 rem).

The consequences to the immediate worker from RH4-B are well within the non-involved worker evaluation guidelines. Therefore, no specific additional worker protection, engineering, or ACs other than those already qualitatively identified as providing defense-in-depth for the immediate worker, are needed.

For scenarios with a frequency less than 1E-06/yr (RH1, RH3, RH4-A, RH5, RH7, NC3-G, and NC3-H), the highest consequences are in RH3, which occurs in the Transfer Cell (no immediate worker present), with an estimated 65.8 rem (658 mSv) to the non-involved worker (approximately 66 percent of 100 rem (1 Sv) guideline), and 5.2 rem (52 mSv) to the MEI (approximately 21 percent of 25 rem (250 mSv) guideline. The non-involved worker consequences (65.8 rem) is below the guideline (100 rem) for selection of Safety Significant SSCs. The Transfer Cell safety features are passive therefore TSR controls are not necessary. The highest dose consequences to the immediate worker occurs during scenario RH4-A with a 116 rem (1.16 Sv) dose, 116 percent of 100 rem guideline.

For protection of the immediate worker, the waste hoist brake system is designated Safety Significant and assigned in Attachment 1, Preliminary Technical Safety Requirements. The risk associated with the potential exposure to the immediate worker from RH4-A is deemed acceptable for the following reasons:

- The conservatism inherent in all of the accident analysis source term variables used to estimate the above consequences,
- The existing elements for protection of the worker discussed in detail in Section 5.1.7.

1.3.2.3 Non-radiological Evaluation Guidelines

DOE orders do not contain a unique set of approved non-radiological risk evaluation guidelines. The WIPP non-radiological risk guidelines are based on Emergency Response Planning Guidelines (ERPG) published by the American Industrial Hygiene Association (AIHA). ERPGs are estimates of concentration ranges for specific chemicals above which acute (< 1 hour) exposure would be expected to lead to adverse health effects of increasing severity. The EPRG-1 values represents a concentration that would have little or no health effects, while EPRG -3 values have the most severe health effects.

The definitions of ERPGs are:

ERPG-1 The maximum concentration in air below which it is believed nearly all individuals could be exposed for up to one hour without experiencing other than mild transient adverse health effects or perceiving a clearly defined objectionable odor.

ERPG-2 The maximum concentration in air below which it is believed nearly all individuals could be exposed for up to one hour without experiencing or developing irreversible or other serious health effects or symptoms that could impair their abilities to take protective action.

ERPG-3 The maximum concentration in air below which it is believed nearly all individuals could be exposed for up to one hour without experiencing or developing life-threatening health effects.

ERPGs have been developed for approximately 100 chemicals and do not exist for some of the chemicals found in TRU mixed waste. Chemicals without established ERPG values will use Temporary Emergency Exposure Limits (TEELs) developed by the DOE Emergency Management Advisory Committee's Subcommittee on Consequence Assessment and Protective Action (SCAPA), Revision 18, Table 4. SCAPA developed TEELs to allow for the preliminary identification of hazardous or potentially hazardous situations for emergency planning even when ERPGs were not available. The TEEL is an interim parameter meant to approximate an ERPG so that emergency planning and preparedness activities can be conducted. Whenever an ERPG is developed for a new chemical, the ERPG replaces the TEEL. The definitions of TEELs are:

TEEL-0 The threshold concentration below which most people will experience no appreciable risk of health effects;

TEEL-1 The maximum concentration in air below which it is believed nearly all individuals could be exposed without experiencing other than mild transient adverse health effects or perceiving a clearly defined objectionable odor.

TEEL-2 The maximum concentration in air below which it is believed nearly all individuals could be exposed without experiencing or developing irreversible or other serious health effects or symptoms that could impair their abilities to take protective action;

TEEL-3 The maximum concentration in air below which it is believed nearly all individuals could be exposed without experiencing or developing life-threatening health effects.

The following TEEL values will be used for those chemicals in TRU waste that do not have an ERPG value.

ERPG-1 TEEL-1

ERPG-2 TEEL-2

ERPG-3 TEEL-3

1.3.2.4 Non-radiological Evaluations

Hazardous waste, as defined in 40 CFR 261, Subparts C and D,[33] often occurs as co-contaminants with TRU waste from defense-related operations, resulting in "TRU mixed waste." The BIR[27] estimates the quantities of RCRA regulated TRU waste to be shipped from each generator site. The most common hazardous constituents in the TRU mixed waste consist of the following: (1) metals such as beryllium, cadmium, lead, mercury (2) solidified sludges; (3) cemented laboratory liquids, and waste from decontamination and decommissioning activities; (4) asbestos; (5) polychlorinated biphenyls (PCBs); (6) halogenated organic solvents such as methylene chloride; Tetrachloroethylene; trichloroethylene; carbon tetrachloride; 1,1,1-trichloroethane, and 1,1,2-trichloro-1,2,2-trifluoroethane; (7) non-halogenated organic solvents such as xylene, methanol, and butyl alcohol. The solvents are referred to as volatile organic compounds (VOCs).

The assumptions used in the analysis for determining the amount of hazardous non-radiological chemicals released to the environment and the extent of exposure to the MEI, non-involved worker, and immediate worker are provided in Section 5.2. Chemical exposures in milligrams per cubic meter (mg/m^3) were calculated for the MEI, off-site public, the non-involved worker, and the immediate worker. Atmospheric dispersion of hazardous chemicals was performed using NRG 1.145,[28] which is described in Section 1.3.16.

For accidents with an estimated frequency between 1E-1 and 1E-2 event per year (anticipated), the MEI limit and the non-involved worker limit is ERPG-1. For the estimated frequency range of 1E-2 to 1E-4 event per year (unlikely), the MEI limit is ERPG-1 and the noninvolved worker limit is ERPG-2. Accidents with an estimated frequency range of 1E-4 to 1E-6 event per year (extremely unlikely) have a MEI limit of ERPG-2 while the non-involved worker limit is ERPG-3. Since no current guidelines exist for immediate workers, EPRG-3 is used for the immediate worker limits for all frequencies.

Based on the RH accident analyses presented in Section 5.2.3, for accident scenarios with a frequency greater than 1E-06/yr, only accident scenario NC1, drum fire in the Hot Cell, required using the guidelines for all the substances listed on Table 5.2-2. Loss of confinement (breach and puncture) accidents and natural phenomena (seismic and tornado) accidents cause the release of VOCs; methylene chloride, carbon tetrachloride, chloroform, and 1,1,2,2-tetrachloroethane. There will not be a buildup of hydrogen gas due to the vent filters installed on the waste drums and on the 72B waste canister. The facility canister is not vented through a filter, but is constructed so as not to be air tight which will prevent a hydrogen build up.

NC1 accident consequences to the non-involved worker and the MEI were found to be less than 1% of evaluation guidelines for the extremely unlikely range (ERPG-2). There are no immediate worker consequences for this accident because all work in the Hot Cell is performed remotely and the Hot Cell has its own ventilation system..

The MEI non-radiological consequences for all accidents analyzed in Section 5.2 and shown on Table 5.2-4a, were 1 percent or less of their respective guidelines. The non-involved worker worst-case consequences for the four VOCs was for carbon tetrachloride which occurred during NC3-D. The non-involved worker carbon tetrachloride consequences during NC3-D were 12 percent of the ERPG-1 guidelines.

The VOCs contained in the RH waste and any hydrogen generated in the RH waste will escape from the waste containers (canisters and 55-gallon drums) and will be rapidly diffused and diluted by the high underground ventilation flow, approximately 35,000 cubic feet per minute. Therefore, the VOCs and hydrogen will have minimal, if any, impact on the repository.

1.3.2.5 Preventive and Mitigative Features

The hazard and accident analysis results are used to indicate whether safety (safety-class or safety-significant) SSCs are required for the WIPP to prevent or mitigate accidental radiological or non-radiological consequences to the MEI and non-involved worker to within the risk evaluation guidelines.

Section 5.2.4.1, Evaluation of the Design Basis, discusses in detail: (1) the identification of defense-in-depth SSCs, (2) the evaluation of safety-class and safety significant SSCs, and (3) the applicability of functional and performance requirements and controls.

The accident analyses indicate that safety (safety-class or safety-significant) SSCs are not required for the WIPP to mitigate any MEI or non-involved worker accident radiological and non-radiological consequence resulting from RH waste operations to below risk evaluation guideline levels.

Secondary confinement is required to remain functional (following DBAs) to the extent that the guidelines in DOE Order O 420.1,[5] Section 4.1.1.2, Design Requirements, are not violated. The risk evaluation guidelines developed in this safety analysis report were used in the absence of definitive criteria in DOE orders or guidance documents for evaluation of secondary confinement. As previously stated, the MEI and non-involved worker unmitigated consequences were found to be below the selected risk evaluation guidelines, including accidents whose frequency is $\leq$1E-06/yr, and as such, secondary confinement is not required. However, existing Design Class II and IIIA secondary confinement SSCs, while not required to mitigate the consequences of an accident from exceeding the risk evaluation guidelines, support the second layer of the WIPP defense-in-depth philosophy. A PTSR AC is derived in Chapter 6 to ensure that these secondary confinement defense-in-depth SSCs are operating as required for each WIPP mode of operation as specified in Table 6-2.

As discussed in the accident scenarios in Section 5.2.3, there is no credible physical mechanism by which the **operational** accidents analyzed in the WHB or the underground will disable the respective ventilation or HEPA filtration systems. No releases are postulated requiring ventilation or HEPA filtration for the Design Basis Earthquake (DBE) and Design Basis Tornado (DBT) scenarios. If waste container breach occurs in the WHB during a credible operational accident, the release to the outside environment is mitigated by the permanently installed continuously on-line two-stage HEPA filter. For accident scenarios in the underground, shift to HEPA filtration of the underground ventilation exhaust system may occur manually (it is assumed that the CMR operator will be notified or be aware of the accident and actuate the shift to filtration), or automatically.

With regard to DBE and DBT scenarios, no releases are expected to be initiated during the DBE or DBT, primarily due to the DBE/DBT design of the WHB structure including tornado doors and specific waste handling equipment such as the WHB 6.25-ton grapple hoist and the RH Bay 140/25-ton crane. As such, the WHB ventilation and filtration systems are not required to mitigate the consequences of the DBE or DBT scenarios.

Based on criteria in Chapter 3, Section 3.1.3.2, the factors that lead to designation of a component as Safety Significant are:

- SSCs whose preventive or mitigative function is necessary to keep hazardous material exposure to the non-involved worker below on-site risk evaluation guidelines,
- SSCs that prevent acute worker fatality or serious injury from hazardous material release that is outside the protection of standard industrial practice, OSHA regulation, or MSHA regulation.

As concluded from WIPP RH PSAR Section 5.2, none of the analyzed scenarios resulted in non-involved worker consequences exceeding the on-site risk evaluation guidelines. Therefore, there are no SSCs that are considered Safety Significant due to the need to prevent or mitigate non-involved worker consequence resulting from RH waste operations.

With regard to the waste hoist failure scenario (RH4A), the consequences involving waste hoist failure while transporting a loaded facility cask was evaluated in Chapter 5. The waste hoist will not be used to simultaneously transport personnel **and** a loaded facility cask Failure of the waste hoist while transporting personnel does not constitute a process related accident involving radioactive materials and as such is considered a standard industrial hazard associated with standard mining operations. Hoisting operations are required to comply with the requirements of 30 CFR 57[34] and the New Mexico Safety Codes for all Mines.[35] For protection of the immediate worker, the waste hoist brake system is designated Safety Significant and specific ACs are derived in Chapter 6 and in Attachment 1, Technical Safety Requirements.

Table 6.1 provides a summary of: (1) the preventive and mitigative defense-in-depth safety functions for each accident analyzed quantitatively in Chapter 5 of the SAR, and (2) the safety features that fulfill those safety functions, and whether they are fulfilled by preventive and mitigative SSCs or ACs (TSRs).

Specific WIPP SSCs are classified as defense-in-depth SSCs, based on the above functional classification results and accident impacts. Rather than the WIPP PSAR specify functional requirements and performance criteria for those defense-in-depth SSCs, the applicable SDDs[9] describe their intended safety functions, and specify the requirements for design, operation, maintenance, testing, and calibration.

As discussed in detail in Chapter 6, based on application of the criteria in 10 CFR 830.205 [6] for the selection of safety and operational limits, and the fact that Safety Class and Safety Significant SSCs (the waste hoist is the only Safety Significant SSC) are not selected for WIPP RH waste operations, PTSR Safety Limits (SLs), Limiting Conditions for Operation (LCOs), and Surveillance Requirements are not required. PTSR ACs assigned for features that play a role in supporting the WIPP defense-in-depth approach are derived in SAR Chapter 6. 10 CFR 830.205 [6] and its implementation guide allow coverage of Safety Significant SSCs through AC. Table 6-1 provides a summary of defense-in-depth safety features and applicable PTSR controls.

Based on the fact that TSR Operational Limits and Surveillance Requirements are not defined for WIPP, operability definitions for defense-in-depth SSCs are not required in the PSAR. SSCs are required in the PTSR to be operated as required during each facility mode as described in Table 6-2, to support the overall WIPP defense-in-depth strategy.

It is concluded from the hazards and accident analyses in this PSAR that the design basis of the WIPP RH TRU waste handling system is adequate in response to postulated range of RH TRU normal operations and accident conditions for the facility.

1.3.2.6 Technical Safety Requirements

PTSRs are developed based on the requirements provided in 10 CFR 830.205 [6], Technical Safety Requirements. Based on the requirements and the results of the hazard and accident analysis, no Safety Limits, Operational Limits, or Surveillance Requirements are defined for the WIPP. Supporting the first layer of defense-in-depth (the prevention of accidents), WIPP PTSR ACs are established as follows:

- To maintain the design, quality, testability, inspect ability, maintainability, and accessibility of the facility, PTSR ACs are required relating to: (1) configuration and document control, (2) maintenance, (3) quality assurance, and (4) geotechnical monitoring. These ACs are important to ensure the frequency of events and the availability of the operating and design conditions remain as analyzed in Section 5.2.3.
- To ensure that the facility operations are conducted by trained and certified/qualified personnel in a controlled and planned manner, TSR ACs are required relating to: (1) facility operations chain of command and responsibilities, (2) facility staffing requirements, (3) procedures, (4) staff qualifications, (5) conduct of operations, and (6) training. These ACs are important to ensuring the low frequency of the accidents analyzed in Section 5.2.3, in particular to those waste handling accidents where human error is the major contributor to the accident initiating event.
- To ensure that hazards are limited within the bounds assumed in Section 5.2, or that the occurrence of a deviation from the assumed hazard bounds are at an acceptably low frequency, PTSR ACs are required relating to: (1) waste characteristics (WAC), (2) waste canister integrity, (3) criticality safety, (4) fire protection, and (5) waste handling PE-Ci limits. The PTSR AC for waste characteristics limits the radionuclide content of each waste canister, restricts the fissile content of the canister, and restricts the presence of waste characteristics unacceptable for management at the WIPP facility. Canister integrity ensures the robustness reflected in the waste release analyses, while criticality safety is a designed in-storage and handling configuration that ensures (in conjunction with waste characteristics) that active criticality control is not required. Waste handling PE-Ci controls limit the radionuclide content of a road cask that can be handled during normal operations.

Supporting the second and third layers of defense-in-depth, WIPP PTSR ACs are identified which establish programs for radiation protection and emergency management. Basic elements and requirements defined for TSR AC programs are enforced by the associated implementing WIPP procedures.

1.3.3 Safety Analysis Conclusions

1.3.3.1 Safety Analysis Overview

Safety analysis was performed for the WIPP to ensure that: 1) potential hazards are systematically identified, 2) unique and representative hazards that may develop into accidents are evaluated, 3) applicable reasonable measures to eliminate, control, or mitigate the accidents are taken, and 4) safety (safety-class or safety-significant) SSCs and accident specific TSRs, based on comparison of accident consequences to the MEI to the off-site evaluation guidelines and the immediate worker and non-involved worker to the on-site risk evaluation guidelines, are identified.

The predicted RH waste (radioactive/chemical) to be received in a waste container at the WIPP was conservatively estimated based on data, as shown in the BIR[27], from the generating sites, process knowledge, and limiting criteria provided in the RH WAC.[16] These estimates provided bounding container inventories used in the determination of potential consequences from postulated accidents.

Hazards associated with the facility RH processes were evaluated through two systematic hazard analysis processes, a 72B HAZOP and a 10-160B HAZOP. The analyses encompassed waste receipt, handling and disposal of RH TRU waste in the WIPP. Each hazards analysis involved a multi-step process which included: 1) identification of the potential hazards associated with the RH TRU waste handling processes, 2) characterization of the waste expected at the WIPP, and 3) a hazard evaluation in the form of a HAZOP.[12, 13] These multi-step processes provided comprehensive examinations of the potential hazards which may require quantitative evaluation in the accident analysis.

The major hazard associated with the RH TRU waste handling process is associated with the radiological and non-radiological hazardous materials within the waste container. Hazards associated with mining operations are considered standard industrial hazards governed by OSHA and MSHA regulations and are considered only when they may be an initiating event leading to the accidental release of radiological or non-radiological hazardous materials. Waste handling operations at the WIPP do not involve high temperature and pressure systems, electromagnetic fields or the use of toxic material in large quantities outside of the waste canisters. Therefore, for the purposes of establishing an inventory of radiological and non-radiological material, only that material contained in the waste containers was considered.

The hazard analysis process identified potential accident scenarios in the categories of: 1) operational accidents (caused by initiators internal to the facility), 2) natural phenomena events (e.g., earthquakes, tornadoes), and 3) external events (caused by man made initiators external to the facility). These potential accident scenarios were then qualitatively ranked in terms of consequence to the public and relative probability to determine unique and representative accidents for further quantitative analysis see Table 5.1-10.

Review of the WIPP Land Management Plan[36] indicates that public access to the WIPP 16-section area up to the exclusive use area shown in Figure 5.2-1 is allowed for grazing purposes, and up to the DOE "off limits area" for recreational purposes. The location of the MEI is at the "closest point of public access," or the DOE "exclusive use area" boundary which is consistent with guidance for the implementation of 40 CFR 191,[37] Subpart A. Calculations are performed in Appendix E for a member of the public at the site boundary for reference purposes.

Although prevailing winds are from the southeast at the WIPP Site, the closest distance to the exclusive use area (without regard to direction) from the exhaust shaft vent and the WHB vent was used in the dose assessment calculations. The closest distance to the exclusive use area boundary from the exhaust shaft vent lies south at approximately 935 ft (285 m) and the closest distance to the exclusive use area boundary from the WHB lies southeast at approximately 1150 ft (350 m) (Figure 5.2-2).

The non-involved worker is assumed to be a worker not directly involved with the waste handling operation for which the accident is postulated. The maximally exposed non-involved worker is assumed to be located at a distance of 328 ft (100 m) from each release point due to the restrictions on dispersion modeling used in this safety analysis, at close-in distances.

A summary of the non-involved worker and MEI radiological and toxicological consequences of analyzed accidents and comparison to risk evaluation guidelines is presented in Tables 5.2-3a, 5.2-3b, 5.2-4a, and 5.2-4b. Off-site (MEI) risk evaluation radiological guidelines are based on ANSI/ANS-51.1,[29] also used by the NRC, which compares dose consequences, due to accidental releases from postulated events, to the estimated frequency of occurrence. Non-involved worker radiological dose consequences are compared to on-site risk evaluation guidelines developed from available supporting DOE and ANSI guidance. The guidelines for chemical exposure are those provided in DOE O 151.1[32] and its guidance documents.

However, on-site risk evaluation guidelines are greater than those for the public as DOE-CBFO accepts the basic premise that entry onto the site implies acceptance of a higher degree of risk than that associated with the off-site public. This assumption is not considered remiss with regard to safety assurance because the on-site risk evaluation guidelines do not result in any acute health effects noticeable to exposed individuals at frequencies greater than 1.0E-4 event per year and would not result in any acute life-threatening effects.

The methodology for verifying the annual occurrence frequencies, qualitatively estimated in the HAZOPs,[12, 13] of operational initiating events is based on the evaluation of process events (leaks), equipment failures, and human error. Appendix D contains the detailed assessment of occurrence frequencies of the accidents evaluated in this section. The occurrence frequencies for process events are estimated based on existing references and engineering judgement. The occurrence frequencies for equipment failures and human errors are based on information from other DOE sites with similar operations, and from generic industry data bases when available, applicable, and appropriate.

Equipment failure rates and human error probabilities were combined with WIPP specific operational data to obtain WIPP specific initiating event occurrence frequencies. A detailed event tree/fault tree analysis for each postulated accident is included in Appendix D. The annual occurrence frequencies derived from the event tree/fault tree analysis are not intended to represent detailed probabilistic calculations requiring sensitivity or uncertainty analysis. The annual occurrence frequencies derived from the event tree/fault tree analysis are used to provide reasonable assurance that an accident frequency is in a specific qualitative frequency range (i.e. extremely unlikely) or "bin" for the purposes of selecting an appropriate risk evaluation consequence guideline.

As required by DOE-STD-3009-94[8], a graded approach is used to achieve the objectives of analysis of accidents. The level of analytical effort is primarily a function of magnitude of the hazard, but also takes into account system complexity, and the degree to which detailed modeling can be meaningfully supported by system definition. For non-reactor nuclear facilities, such as WIPP, the Standard does not present an expectation of or requirement for probabilistic/quantitative risk assessment.

For the purposes of establishing safety (safety-class or safety-significant) preventative and mitigative

SSCs, an iterative process is performed. The safety (safety-class or safety-significant) iterative process (see Section 3.1.3) initially involves comparing the "unmitigated" accident consequences to the MEI and non-involved worker (with associated "unmitigated" accident frequency from the event tree analyses in Appendix D) to the off-site and on-site risk evaluation guidelines respectively. The process is continued taking credit for additional preventative/mitigative SSCs until the risk evaluation guidelines are met. Systems required to keep estimated consequences below the risk evaluation guidelines are designated as safety (safety-class or safety-significant) SSCs.

The assessment of the immediate worker accident consequences is based on the evaluation of operational waste handling scenarios, whose frequency is greater than 1E-06/yr, that may be initiated by waste handling equipment failure or directly through human error by a worker performing a waste handling operation. The immediate worker is that individual directly involved with the waste handling operation for which the accident is postulated. Although procedures dictate that workers exit the area immediately, such accidents present an immediate risk due to the inhalation of airborne radionuclides to the worker performing the waste handling operation. As discussed in Sections 5.1.2.1.2 and 5.1.7, the assessment of immediate worker consequences provides quantitative information in evaluating the adequacy of the WIPP defense-in-depth features (identified in the qualitative HAZOPs[12, 13]) in keeping worker dose from accidents ALARA. No current risk evaluation guidelines exist for the assessment of accident consequences to immediate workers. Therefore, in the absence of guidelines, and for conservatism, the on-site radiological guidelines were used as a reference point for the assessment of consequences to immediate workers and the evaluation of the adequacy of the WIPP defense-in-depth features.

1.3.3.2 Comparison to Standards of 40 CFR 61 and 40 CFR 191

As required by the Working Agreement for Consultation and Cooperation,[1] signed by the U.S. DOE and the State of New Mexico, July 1981, this SAR will document DOE's ability to comply with the provisions of 40 CFR 191, Subpart A.[37] Paragraph 191.03(b) which specifies that the combined annual dose equivalent to any member of the public in the general environment resulting from the discharge of radioactive material and direct radiation from the management and storage of TRU waste shall not exceed 25 mrem (0.25 mSv) to the whole body and 75 mrem (0.75 mSv) to any critical organ. Also, paragraph 61.92 of 40 CFR 61 Subpart H[38] specifies that emissions of radionuclides to the ambient air from DOE facilities shall not exceed those amounts that would cause any member of the public to receive in any year an effective dose equivalent of 10 mrem (0.10 mSv).

WIPP normal operations do not involve or entail any planned or expected releases of airborne radioactive materials to the workplace or the environment. Waste containers accepted for disposal at the WIPP are required to meet the 10 CFR 835[30] external contamination limits. To ensure compliance, the containers are surveyed prior to release from the generator sites and again as the road casks are opened at the WIPP. Since radioactive material remains in the waste containers unless an accident occurs, emissions to the ambient air during normal WIPP waste disposal operation will be below measurable levels and for all practical purposes will not occur. A WIPP analysis[39] demonstrates, through dispersion modeling, that off-site radiological emission consequence to the public and environment resulting from normal waste disposal operations (without taking credit for any mitigation systems; i.e., HEPA filtration) will be minimal. WIPP management anticipates that 40 CFR 191, Subpart A[37] compliance sampling will confirm the dispersion modeling. WIPP hazard analysis demonstrates that EPA emission standards will not be exceeded unless waste containers are breached in a waste handling accident or in another off-normal event and facility mitigation systems fail. Also, the public is expected to receive a negligible dose during normal operations. As a result of the above information, it may be concluded that the WIPP will be operated in compliance with the release standards of 40 CFR 191 Subpart A[37] and 40 CFR 61 Subpart H.[38] Effluent sampling will be conducted to demonstrate compliance with the annual release limits in those standards.

The EPA implementation guidance for 40 CFR 191, Subpart A (EPA 402-R-97-001, Section 2.3 [40]) states "DOE must examine radiation doses to the public due to both actual normal operations and any unplanned or accidental release which occur during the reporting period." Further, EPA 402-R-97-001, Section 2.1[40] states, "Section 191.03(b) states that management and storage of transuranic waste at DOE facilities shall be conducted to provide reasonable assurance that the annual radiation dose to any member of the public in the general environment resulting from discharges of radioactive material and direct radiation from such management and storage shall not exceed specified limits." As shown in this SAR, only certain types of accidents have the capability of producing a dose to the public. The DOE has implemented a program that provides reasonable assurance that the radiation dose resulting from WIPP discharges to any member of the public in the general environment will not exceed 25 mrem (0.25 mSv) to the whole body and 75 mrem (0.75 mSv) to any critical organ (DOE/WIPP-00-3121 [41]).

The following discussion provides a comparison of the calculated dose consequences to the release standards. As the provisions of 40 CFR 191 Part A[37] guidance impose no restrictions on systems that may be considered in the evaluation of dose to the public, comparison of the WIPP accident analysis results to the standards in paragraph 191.03(b) include the availability and effectiveness of mitigation systems that are expected to be in operation should an accident occur. As shown in the accident analysis, these systems are not required in order to meet the safety criteria established by DOE Orders. However, the plant design and operating procedures do provide them for defense-in-depth and additional assurance that releases that might result from accidents will be as low as reasonably achievable. As shown in Appendix E, based on a decontamination factor of 1E-06 provided by the WHB and underground HEPA filtration systems, **the worst-case <u>mitigated</u> accident doses to the maximally exposed individual for all accidents analyzed, regardless of occurrence frequency, will be much less than the <u>annual</u> release limits imposed by 40 CFR 191 Subpart A[37] and 40 CFR 61, Subpart H[38].**

DOE will provide EPA with regularly scheduled reports summarizing the results of compliance sampling and dose calculations. As specified in the WIPP Land Withdrawal Act, reporting will be every two years, the Biennial Environmental Compliance Report (BECR) shall be the documentation in which the DOE provides data to EPA demonstrating compliance with 40 CFR 191, Subpart A.[37] Additional reporting information for Subpart A is documented in DOE/WIPP-00-3121.[41]

1.3.4 Analysis of Beyond the Design Basis Accidents

1.3.4.1 Operational Events

An evaluation of 72-B cask and 10-160B cask operational accidents "beyond" design basis accident (BDBA) is conducted to provide perspective of the residual risk associated with the operation of the facility. As discussed in DOE-STD-3009-94[8], BDBAs are simply those operational accidents with more severe conditions or equipment failure. Based on the analyses in Section 5.2.3, the operational accident scenario involving potential consequences to the non-involved worker, MEI, and immediate worker, whose frequency is less than 1E-06/yr is RH5, Fire followed by Explosion. A 10-160B accident was not selected for BDBA analysis because the radionuclide inventory for the 72B canister bounds that of a facility canister loaded with drums from a 10-160B road cask.

The source term MAR developed in Section 5.2.3 is based on the 72-B waste canister inventory derived in Section 5.1.2.1.2. The analyses assumed that based on the data in Appendix A, that the maximum radionuclide inventory in a 72-B waste canister is 80 PE-Ci for direct loaded waste and 240 PE-Ci for double contained waste. The on-site and off-site risk evaluation guidelines for the extremely unlikely range are used for the consequence evaluation even though the frequency of the BDBA scenarios is beyond extremely unlikely.

The worst case radiological consequences of RH5 are discussed here assuming that waste canister involved in the scenario is at 80 PE-Ci. The same assumptions regarding waste form combustible and noncombustible composition, damage ratio, airborne release fraction (median value instead of bounding), and respirable fraction are assumed. Substitution of these values into the consequence calculations for RH5, indicate doses of approximately 0.6 rem (6 mSv) to the noninvolved worker individual (less than one percent of the 100 rem noninvolved worker risk evaluation guideline for the extremely unlikely range), and 0.05 rem (.5 mSv) (less than one percent of 25 rem MEI risk evaluation guideline for the extremely unlikely range) to the MEI. The noninvolved worker and MEI doses are below their respective risk evaluation guidelines. The estimated 5.4 rem (54 mSv) dose to the immediate worker for the RH5 beyond design basis scenario (Appendix E, Table E-14) does not exceed the noninvolved worker risk evaluation guideline of 100 rem (1 Sv) for the extremely unlikely range. Therefore, no specific additional worker protection engineering or administrative controls are identified and the risk associated with this potential exposure is deemed acceptable.

1.3.4.2 Natural Phenomena

As discussed in Section 3.4.3 of DOE-STD-3009-94[8], natural phenomenon BDBAs are defined by a frequency of occurrence less than that assumed for the DBA. Since the DBT is defined with a 1,000,000 year return period, and the DBE with a 1,000 year return period, the most credible BDBA natural phenomenon event is an earthquake with a vertical ground acceleration of greater than 0.1 g (considered extremely unlikely). DBE SSCs: (1) the WHB structure, and (2) WHB 140/25-ton bridge crane, the CUR 25-ton crane, the Hot Cell crane, and the Facility Cask Loading Room grapple hoist, are assumed to fail resulting in a release of radioactive material.

The source term MAR developed in Section 5.2.3 is based on the 10-160B road cask inventory derived in Section 5.1.2.1.2. The analyses assumed that based on the data in Appendix A, that the maximum radionuclide inventory in a 10-160B road cask is 20 PE-Ci.

It is assumed that the WHB structure fails resulting in the Hot Cell roof collapsing into the Hot Cell resulting in damage to ten 10-160B RH waste drums, with a radionuclide inventory of 20 PE-Ci, awaiting placement in facility canisters and a partially loaded facility canister. The partially loaded facility canister contains two drums from two different 10-160B road casks is in the loading station. Each of the two drums in the facility canister contain the maximum radionuclide inventory of a 10-160B road cask. The total Hot Cell inventory is 60 PE-Ci. It is conservatively assumed that all of the drums and the partially loaded facility canister are breached by the falling Hot Cell roof debris and the Hot Cell crane.

The beyond DBE is basically the same accident as described for NC3-F, with the same MAR, waste form combustible and noncombustible composition, airborne release fraction, and respirable fraction. Using the NC3-F values and a factor of 10 increase in the damage ratio, the consequence calculations for beyond DBE indicate doses of approximately 24.7 rem (247 mSv) to the non-involved worker (approximately 25 percent of the 100 rem non-involved worker risk evaluation guideline for the extremely unlikely range), and 1.9 rem (19 mSv) (approximately 7.6 percent of 25 rem MEI risk evaluation guideline for the extremely unlikely range) to the MEI. The non-involved worker and MEI doses are below the risk evaluation guidelines, respectively. There is no postulated dose to the immediate worker since the event occurs in the Hot Cell which would not be occupied during 10-160B RH waste handling operations or when RH waste is stored there. Therefore, the radiological risk associated with a greater than 0.1 g earthquake is considered acceptable.

References for Section 1.3

1. Working Agreement for Consultation and Cooperation, signed by the U.S. DOE and the State of New Mexico, July 1981 and subsequent revisions.

2. U.S. Department of Energy, DOE Order 5480.21, Unreviewed Safety Questions, December 1991.

3. U.S. Department of Energy, DOE Order 5480.22, Technical Safety Requirements, February 1992.

4. U.S. Department of Energy, DOE Order 5480.23, Nuclear Safety Analysis Reports, April 1992.

5. U.S. Department of Energy, DOE O 420.1, Facility Safety, October 1995.

6. Title 10 Code of Federal Regulations (CFR) Part 830, Nuclear Safety Management

7. U.S. Department of Energy, DOE-STD-1027-92, Hazard Categorization and Accident Analysis Techniques for Compliance with DOE Order 5480.23, Nuclear Safety Analysis Reports, 1992.

8. U.S. Department of Energy, DOE-STD-3009-94, Preparation Guide for U.S. Department of Energy Nonreactor Nuclear Facility Safety Analysis Reports (Change 1, January 2000).

9. Waste Isolation Pilot Plant General Plant System Design Description (GPDD), Rev. 2, April 1997.

10. DOE/CAO-1996-2184, Title 40 CFR 191 Compliance Certification Application for the Waste Isolation Pilot Plant, October 1996.

11. WP 02-RP.03, Waste Isolation Pilot Plant Human Factors Evaluation, May 2002.

12. WP 02-RP.02, Hazard Analysis Results Report for Remote Handled Waste (RH), Waste Isolation Pilot Plant, July 1999.

13. WSMS-WIPP-00-0006, Hazard and Operability Study for the 10-160B Cask Remote Transuranic Waste Handling System (RH), Waste Isolation Pilot Plant, Westinghouse Safety Management Solutions, January 2001.

14. DOE/EIS-0026, Final Environmental Impact Statement, Waste Isolation Pilot Plant, 2 Vols, U.S. Department of Energy, Carlsbad, N.M., 1980.

15. DOE/EIS-0026-FS, Final Supplement Environmental Impact Statement, Waste Isolation Pilot Plant, U.S. Department of Energy, Carlsbad, N.M., 1990.

16. DOE/WIPP-Draft-3123, Remote-Handled Waste Acceptance Criteria for the Waste Isolation Pilot Plant.

17. Waste Isolation Pilot Plant Nuclear Criticality Safety Evaluation for Remote Handled Waste (U), WSMS-WIPP-00-0003, Rev. 1, December 2001.

18. ANSI/ANS-8.1, Nuclear Criticality Safety in Operations with Fissionable Materials Outside Reactors.

19. ANSI/ANS-8.3, Criticality Accident Alarm System.

20. ANSI/ANS-8.5, Use of Borosilicate-Glass Raschig Rings as a Neutron Absorber in Solutions of Fissile Material.

21. ANSI/ANS-8.7, Guide for Nuclear Criticality Safety in the Storage of Fissile Materials.

22. ANSI/ANS-8.15, Nuclear Criticality Control of Special Actinide Elements.

23. ANSI/ANS-8.19, Administrative Practices for Nuclear Criticality Safety.

24. DOE/WIPP-3217, WIPP Fire Hazards Analysis Report, June 2002.

25. WP 12-9, WIPP Emergency Management Program.

26. Hazardous Waste Facility Permit No. NM4890139088-TSDF, issued by the New Mexico Environment Department October 1999.

27. DOE/CAO-95-1121, U.S. Department of Energy Waste Isolation Pilot Plant Transuranic Waste Baseline Inventory Report (TWBIR), Revision 2, December 1995.

28. Nuclear Regulatory Commission Regulatory Guide 1.145, Rev 1, Atmospheric Dispersion Models for the Potential Accident Consequence Assessments at Nuclear Power Plants, United States Nuclear Regulatory Commission, Washington, DC, November 1982.

29. ANSI/ANS-51.1-1983, American National Standards Institute, Standard Nuclear Safety Criteria for the Design of Stationary Pressurized Water Reactor Plants.

30. 10 CFR 835, Occupational Radiation Protection.

31. 10 CFR 100, Reactor Site Criteria.

32. DOE O 151.1A, Comprehensive Emergency Management System, November 2000.

33. 40 CFR 261, Identification and Listing of Hazardous Waste.

34. 30 CFR 57, Safety and Health Standards - Underground Metal and Nonmetal Mines, 8th edition, 1994.

35. New Mexico Mine Safety Code for All Mines, 1990.

36. DOE/WIPP 94-026, Waste Isolation Pilot Plant Land Management Implementation Plan, August 1994.

37. 40 CFR 191, Environmental Radiation Protection for Management and Disposal of Spent Nuclear Fuel, High-Lead and Transuranic Wastes, Subpart A, Environmental Standards for Management and Storage.

38. 40 CFR 61, National Emission Standards for Hazardous Air Pollutants, Subpart H, National Emission Standards for Emissions of Radionuclides Other than Radon from Department of Energy Facilities.

39. WID Inter-Office Correspondence (Letter #DA:00:02029), Radiological Modeling Results, April 2000.

40. EPA 402-R-97-001, Guidance for the Implementation of EPA's Standards for Management and Storage of Transuranic Waste (40 CFR Part 191, Subpart A) At the Waste Isolation Pilot Plant (WIPP), January 1997.

41. DOE/WIPP-00-3121, Implementation Plan for 40 CFR 191 Subpart A, February 2000.

Table 1.3-1 MEI Risk Evaluation Guidelines

Description	Estimated Annual Frequency of Occurrence	Description	Radiological Guidelines	Nonradiological Guidelines
Normal operations	$1 \geq f > 10^{-1}$			
Anticipated	$10^{-1} \geq f \geq 10^{-2}$	Incidents that may occur several times during the lifetime of the facility. (Incidents that commonly occur)	$\leq$ 2.5 rem (25 mSv)	ERPG-1
Unlikely	$10^{-2} \geq f > 10^{-4}$	Accidents that are not anticipated to occur during the lifetime of the facility. Natural phenomena of this class include: Uniform Building Code-level earthquake, 100-year flood, maximum wind gust, etc.	$\leq$ 6.5 rem (65 mSv)	ERPG-1
Extremely Unlikely	$10^{-4} \geq f > 10^{-6}$	Accidents that will probably not occur during the life cycle of the facility.	$\leq$ 25 rem (250 mSv)	ERPG-2
Beyond Extremely Unlikely	$10^{-6} \geq f$	All other accidents.	No Guidelines	No Guidelines

Table 1.3-2 Noninvolved Worker Risk Evaluation Guidelines

Description	Estimated Annual Frequency of Occurrence	Description	Radiological Guidelines	Nonradiological Guidelines
Normal operations	$1 \geq f > 10^{-1}$			
Anticipated	$10^{-1} \geq f \geq 10^{-2}$	Incidents that may occur several times during the lifetime of the facility. (Incidents that commonly occur)	$\leq$ 5 rem (50 mSv)	ERPG-1
Unlikely	$10^{-2} \geq f > 10^{-4}$	Accidents that are not anticipated to occur during the lifetime of the facility. Natural phenomena of this class include: Uniform Building Code-level earthquake, 100-year flood, maximum wind gust, etc.	$\leq$ 25 rem (250 mSv)	ERPG-2
Extremely Unlikely	$10^{-4} \geq f > 10^{-6}$	Accidents that will probably not occur during the life cycle of the facility.	$\leq$ 100 rem (1 Sv)	ERPG-3
Beyond Extremely Unlikely	$10^{-6} \geq f$	All other accidents.	No Guidelines	No Guidelines

This page intentionally blank

1.4 Organizations

The overall responsibility for the design, construction, operation, and decommissioning of the WIPP rests solely with the DOE. Within the DOE, the Assistant Secretary for Environmental Restoration and Waste Management (EM) is responsible for implementing the radioactive waste disposal policy. In 1993, the DOE Carlsbad Area Office (CAO) was created to be directly responsible for the WIPP Project. The CAO was upgraded to a DOE Field Office (CBFO), which reports programmatically to the DOE-EM and administratively to the DOE-AL.

During the construction phase, DOE-AL contracted with the following organizations to participate in the WIPP Project:

- Sandia National Laboratories (SNL), Department of Waste Management Technology, Albuquerque, New Mexico, to serve as the Scientific Advisor

- Bechtel National Incorporated, Advanced Technology Division, San Francisco, California, to serve as the Architect/Engineer

- Westinghouse Electric Corporation, Waste Isolation Division, Carlsbad, New Mexico, to serve first as the Technical Support Contractor (1978-1985) and later as the Management and Operating Contractor (MOC) (1985-2001).

- Washington TRU Solutions (WTS) to serve as MOC (2001 to Present)

SNL, as the Scientific Advisor, has been responsible for developing the conceptual design of the WIPP facility, performing the site selection and characterization studies, and completing the performance assessment of the WIPP facility in compliance with 40 CFR 191 Subparts B and C.[1] SNL is also responsible for performance assessment activities associated with continuous compliance with 40 CFR 191, including re-certification.

In 1985, the DOE-AL contracted with Westinghouse to provide management and operating services as the MOC. In that capacity, Westinghouse was responsible for general management and operating services, including operational safety, engineering management, quality assurance and control, project control, construction management, environmental services, and ensured that all inputs to facility operations were properly reviewed for health, safety, and environmental implications.

In 2001, WTS was contracted by DOE-AL to serve as the MOC. WTS is responsible for providing general management and operating services, including operational safety, engineering management, quality assurance and control, project control, construction management, and environmental services. WTS also ensures that all inputs to facility operations are properly reviewed for health, safety, and environmental implications.

The DOE has entered into a formal agreement with the State of New Mexico for the purpose of consultation and cooperation. The Working Agreement for Consultation and Cooperation (WACC[2]) provides detail about the SAR and provides for the Director of EEG to be the representative for the State. The WACC designates key events, sets time frames for review, provides for comments and resolution of comments, and establishes procedures for review of the WIPP Project activities and for resolving conflicts. The WACC agreement also provides a mechanism for conflict resolution.

References for Section 1.4

1..40 CFR 191, U.S. Environmental Protection Agency, Environmental Radiation Protection for Management and Disposal of Spent Nuclear Fuel, High Level and Transuranic Wastes, Subpart B, Environmental Standards for Disposal, July 1994.

2..Working Agreement for Consultation and Cooperation, signed by the U.S. DOE and the State of New Mexico, July 1981 and subsequent revisions.

1.5 Safety Analysis Report Organization

The WIPP RH SAR was structured to satisfy the specific commitments made in the WACC Agreement[1]. The WACC format is different from the 20 chapter SAR concept of DOE Order 5480.23,[2] and the 17 chapter concept of DOE-STD-3009-94.[3] By applying the graded approach concepts as discussed in DOE-STD-3009-94,[3] 10 of the 20 DOE Order 5480.23[2] chapters and 7 of the 17 DOE-STD-3009-94[3] chapters were consolidated into other identified chapters. This resulted in a 10 chapter WIPP RH PSAR format that is similar to the WACC Agreement[1] format. This graded approach consolidation and reformatting is consistent with the discussion in DOE Order 5480.23[2] Attachment 1, Sections 4.f.(1)(c), and 4.f.(3)(d). PSAR chapter titles are renamed to follow selected DOE-STD-3009-94[3] or DOE Order 5480.23[2] titles and to be consistent with their individual contents. The WIPP SAR format is as follows:

Chapter 1 - Executive Summary
Chapter 2 - Site Characteristics
Chapter 3 - Principal Design and Safety Criteria
Chapter 4 - Facility Design and Operation
Chapter 5 - Hazards and Accident Analysis
Chapter 6 - Derivation of Technical Safety Requirements
Chapter 7 - Radiological and Hazardous Material Protection
Chapter 8 - Institutional Programs
Chapter 9 - Quality Assurance
Chapter 10 - Decontamination and Decommissioning

Table 1.6-1 provides a correlation between the WACC Agreement SAR Format and Content requirements and the WIPP SAR format, and Table 1.6-2 provides a correlation between the WIPP RH SAR format, the SAR topics required by DOE Order 5480.23,[2] and DOE-STD-3009-94.[3] DOE-STD-3009-94[3] contains the format and content standard for documented safety analysis meeting the requirements of 10 CFR 830.[4]

References for Section 1.5

1. Working Agreement for Consultation and Cooperation, signed by the U.S. DOE and the State of New Mexico, July 1981 and subsequent revisions.

2. U.S. Department of Energy, DOE Order 5480.23, Nuclear Safety Analysis Reports, April 1992.

3. U.S. Department of Energy, DOE-STD-3009-94, Preparation Guide for U.S. Department of Energy Nonreactor Nuclear Facility Safety Analysis Reports, (Change 1, January 2000)

4. 10 CFR 830, Nuclear Safety Management

Table 1.5-1, Consultation and Cooperation (WACC) Agreement/SAR Correlation 1 of 5

WACC Topic	SAR Section
Chapter 1 - Introduction and General Description	
1.1 Location	1.1 Facility Background and Mission
1.2 Mission	1.1 Facility Background and Mission
1.3 Organization	1.4 Organizations
1.4 Facilities - both surface and underground	1.2.1 Facility Design
1.5 Operations - including retrieval	1.2.2 Retrieval operations deleted. Disposal-phase operations are discussed with no intent to retrieve.
1.6 Research and Development programs	Deleted - SAR only addresses disposal phase
Chapter 2 - Site Characteristics	
2.1 Geography and Demography	2.1 Geography and Demography of the Area Around the WIPP Facility.
2.2 Nearby Industrial, Transportation and Military Facilities	2.2 Nearby Industrial, Transportation and Military Facilities
2.3 Meteorology	2.5 Meteorology
2.4 Surface Hydrology	Deleted per CBFO direction.
2.5 Subsurface Hydrology	Deleted per CBFO direction.
2.6 Regional Geology	Deleted per CBFO direction.
2.7 Site Geology	Deleted per CBFO direction.
2.8 Vibratory Ground Motion	2.8 Vibratory Ground Motion
2.9 Surface Faulting	Deleted per CBFO direction.
2.10 Stability of Subsurface Materials and Foundations	Deleted per CBFO direction.
2.11 Slope Stability	2.5.2.5 Topography

Table 1.5-1, Consultation and Cooperation (WACC) Agreement/SAR Correlation 2 of 5

WACC Topic		SAR Section	
Chapter 3 - Principal Design Criteria			
3.1	Definition of Mission	1.1	Facility Background and Mission
	Waste Characterization	5.1.2	RH Waste Characterization
	Repository Functions	3.1	General Design Criteria
	Storage Capacities	3.1.1	TRU Waste Criteria
	Retrievability		Deleted
	By-Products	3.1.2	Facility By-Products
3.2	Structural and Mechanical Design	3.2	Structural Design Criteria
3.3	Safety Protection Criteria		
	Confinement	3.3.1	Confinement Requirements
	Handling	3.1	General Design Criteria
	Emplacement	3.1	General Design Criteria
	Retrieval		Deleted
	Fire	3.3.2	Fire Protection
	Explosion	3.3.2	Fire Protection
	Radiological	3.3.3	Radiological Protection
	Criticality	3.3.3.4	Nuclear Criticality Safety
	Mine Safety	3.3.4	Industrial and Mining Safety
3.4	Design Classification	3.1.3	Design Classification of Structures, Systems, and Components
3.5	Decommissioning	3.1.4	Decontamination and Decommissioning
	Decontamination	3.1.4	Decontamination and Decommissioning
	Backfilling		Deleted
	Sealing	3.1.4	Decontamination and Decommissioning
	Record Maintenance	3.1.4	Decontamination and Decommissioning
	Site Markers	3.1.4	Decontamination and Decommissioning

Table 1.5-1, Consultation and Cooperation (WACC) Agreement/SAR Correlation 3 of 5

WACC Topic		SAR Section	
Chapter 4 - Plant Design			
4.1	Location Details	4.1	Summary Description
4.2	Surface Facilities	4.2.1	Surface Facilities
	Waste Building Handling	4.2.1.1	Waste Handling Building
	Support Functions	4.2.1.2 4.2.1.3 4.2.1.4 4.2.1.5	Exhaust Filter Building Water Pumphouse Support Building Support Structures
4.3	Shafts and Subsurface Facilities	4.2.2 4.2.3	Shaft and Hoist Facilities Subsurface Facilities
	Shafts	4.2.2	Shaft and Hoist Facilities
	Storage	4.2.3	Subsurface Facilities
	Experimental Areas	4.2.3	Subsurface Facilities
4.4	Service and Utility systems	4.3 4.4 4.5 4.6 4.7	Process Description Confinement Systems Safety Support Systems Utility and Auxiliary Systems Radioactive Waste (Radwaste) and Hazardous Waste Management
	Ventilation	4.4.1 4.4.2	Confinement Ventilation Systems
	Electrical	4.6.1	Electrical System
	Fire Protection	4.5.1	Fire Protection System
	Waste Water	4.6.3 4.6.4 4.7	Domestic Water System Sewage Treatment System Radioactive Waste (Radwaste) and Hazardous Waste Management
	Salt Handling	4.3.5	Underground Mining Operations
	Radwaste	4.7	Radioactive Waste (Radwaste) and Hazardous Waste Management
	Transportation	2.2.7	Land Transportation
	Alarms	4.5.2	Plant Monitoring and Communications
	Maintenance	8.3.5	Maintenance Program

Table 1.5-1, Consultation and Cooperation (WACC) Agreement/SAR Correlation 4 of 5

WACC Topic	SAR Section
Compressed Air	4.6.2 Compressed Air
Underground Fuel	4.2.3.1 General Design
4.5 Emplacement and Retrieval	4.3 Retrieval Deleted
4.6 Underground Excavation Equipment	Deleted - Standard Industrial (MSHA) Hazard
Chapter 5 - Process Description	
5.1 Contact-handled (CH) waste handling	CH SAR
5.2 Remote-handled (RH) waste handling	4.3.1 RH TRU Waste Handling System
5.3 Experimental handling	Deleted - SAR only addresses disposal phase
5.4 Plant Generated Radwaste	4.7 Radioactive Waste (Radwaste) and Hazardous Waste Management
5.5 General process	
Instrumentation	4.5.2 Plant Monitoring and Communications
Criticality Safety	5.1.5 Prevention of Inadvertent Nuclear Criticality
Waste Logging	4.3.3 WIPP Waste Information System
5.6 Underground excavation	4.3.4 Underground Mining Operations
5.7 Control room	4.5.2.1 Central Monitoring System
5.8 Analytical Sampling	7.1.4.2.1 Effluent Sampling/Monitoring and Environmental Monitoring 7.2.4 Environmental Monitoring
5.9 Retrievability of All Waste Forms	Deleted
Chapter 6 - Radiation Protection	
6.1 As low as reasonably achievable (ALARA)	7.1.2 ALARA Policy and Program 7.2.3.1 ALARA Policy
6.2 Radiation Sources	7.1.3.1.3.2 Direct Radiation Sources
6.3 Radiation protection	7.1.3 Radiological Exposure Control
6.4 On-site dose assessment	7.1.4.1 On-site Dose Assessment 7.2.2.2 On-site Exposure Assessment
6.5 Radiological control program	7.1.1 Radiological Control Program and Organization
6.6 Off-site dose assessment	7.1.4.2 Off-site Dose Assessment 7.2.2.1 Off-site Exposure Assessment

Table 1.5-1, Consultation and Cooperation (WACC) Agreement/SAR Correlation 5 of 5

WACC Topic	SAR Section
Chapter 7 - Accident Analysis	
7.1 Accident classifications	5.2 RH TRU Accident Analysis
7.2 Source terms and analytical methods	5.2 RH TRU Accident Analysis
7.3 Accident descriptions and actual analyses	5.2 RH TRU Accident Analysis
Chapter 8 - Long Term Waste Isolation Assessment	5.3 Long-Term Waste Isolation Assessment
8.1 Identification of potential communication modes	5.3 Long-Term Waste Isolation Assessment
8.2 Modeling methods	5.3 Long-Term Waste Isolation Assessment
8.3 Consequence analyses	5.3 Long-Term Waste Isolation Assessment
Chapter 9 - Conduct of Operations	
9.1 Organizational structure	8.1.3 Organizational Structure, Responsibilities, and Interfaces
9.2 Acceptance tests	8.3.3 Initial Test Program
9.3 Training	8.2.4 Training Program
9.4 Operating procedures	8.2.3 Procedures Program
9.5 Security	Deleted
9.6 Emergencies	8.5 Emergency Preparedness Program
Chapter 10 - Operating Limits and Controls	
10.1 Design limits	Chapter 3
10.2 Operating limits and surveillance requirements	6.4 Derivation of WIPP TSRs
10.3 Design features	Not Required by 5480.22
10.4 Administrative controls	6.4.5 Administrative Controls
10.5 Guidelines for the operating organization	6.4.5 Administrative Controls
Chapter 11 - Quality Assurance	Chapter 9 - Quality Assurance

Table 1.5-2, DOE Order 5480.23/ 10CFR830.204/ WIPP SAR Correlation **Page 1 of 2**

DOE Order 5480.23 Topics	10CFR830 Documented Safety Analysis DOE-STD-3009-94	WIPP SAR Chapter
Chapter 1 - Executive Summary	Unnumbered Executive Summary	Chapter 1 - Executive Summary
Chapter 3 - Site Characteristics	Chapter 1 - Site Characteristics	Chapter 2 - Site Characteristics
Chapter 4 - Facility Description and Operation	Chapter 2 - Facility Description	Chapter 3 - Principal Design and Safety Criteria Chapter 4 - Facility Design and Operation
Chapter 5 - Hazards Analysis and Classification of the Facility Chapter 11 - Analysis of Normal, Abnormal, and Accident Conditions	Chapter 3 - Hazard and Accident Analysis	Chapter 5 - Hazards and Accident Analysis
Chapter 4 - Facility Description and Operation	Chapter 4 - Safety Structures, Systems, and Components	Chapter 3 - Principal Design and Safety Criteria Chapter 4 - Facility Design and Operation
Chapter 16 - Derivation of Technical Safety Requirements	Chapter 5 - Derivation of Technical Safety Requirements	Chapter 6 - Derivation of Technical Safety Requirements
Chapter 8 - Inadvertent Criticality Protection	Chapter 6 - Prevention of Inadvertent Criticality	Chapter 5 - Hazards and Accident Analysis
Chapter 9 - Radiation Protection Chapter 11 - Analysis of Normal, Abnormal, and Accident Conditions	Chapter 7 - Radiation Protection	Chapter 7 - Radiological and Hazardous Material Protection
Chapter 10 - Hazardous Material Protection Chapter 11 - Analysis of Normal, Abnormal, and Accident Conditions	Chapter 8 - Hazardous Material Protection	Chapter 7 - Radiological and Hazardous Material Protection
Chapter 7 - Radioactive and Hazardous Material Waste Management Chapter 11 - Analysis of Normal, Abnormal, and Accident Conditions	Chapter 9 - Radioactive and Hazardous Waste	Chapter 7 - Radiological and Hazardous Material Protection
Chapter 15 - Initial Testing, In service Surveillance, Maintenance	Chapter 10 - Initial Testing, In-Service Surveillance, Maintenance	Chapter 8 - Institutional Programs

Table 1.5-2, DOE Order 5480.23/ 10CFR830.204/ WIPP SAR Correlation **Page 2 of 2**

DOE Order 5480.23 Topics	10CFR830 Documented Safety Analysis DOE-STD-3009-94	WIPP SAR Chapter
Chapter 17 - Operational Safety	Chapter 11 - Operational Safety	Chapter 8 - Institutional Programs
Chapter 13 - Procedures and Training	Chapter 12 - Procedures and Training	Chapter 8 - Institutional Programs
Chapter 14 - Human factors	Chapter 13 - Human Factors	Chapter 4 - Facility Design and Operation Chapter 5 - Hazards and Accident Analysis
Chapter 18 - Quality Assurance	Chapter 14 - Quality Assurance	Chapter 9 - Quality Assurance
Chapter 19 - Emergency Preparedness	Chapter 15 - Emergency Preparedness Program	Chapter 8 - Institutional Programs
Chapter 20 - Provisions for Decontamination and Decommissioning	Chapter 16 - Provisions for Decontamination and Decommissioning	Chapter 10 - Decontamination and Decommissioning
Chapter 12 - Management, Organization, Institutional Safety Provisions	Chapter 17 - Management, Organization, and Institutional Safety Provisions	Chapter 8 - Institutional Programs

Note 1 - WIPP SAR Chapter 3, Principal Design and Safety Criteria, addresses applicable statues, rules, and Departmental Orders, Safety Criteria, and Design Criteria. Chapter 3 supports the compliance aspects of each SAR chapter.

Note 2 - DOE Order 5480.23, Chapter 2, Applicable Statutes, Rules, and Departmental Orders, and Chapter 6, Principal Health and Safety Criteria, are incorporated into all applicable chapters of DOE-STD-3009-94.

This page intentionally blank

1.6 Statutes, Federal Rules, and DOE Directives Applicable to the Preclosure WIPP RH TRU Waste Operational Safety

Public Law 83-703	Atomic Energy Act of 1954, as amended
Public Law 90-148	Clean Air Act
Public Law 91-190	National Environmental Policy Act
Public Law 94-580	Resource Conservation and Recovery Act
Public Law 95-164	Federal Mine Safety and Health Act of 1977
Public Law 96-164	Department of Energy National Security and Military Applications of Nuclear Energy Authorization Act of 1980
Public Law 96-510	Comprehensive Environmental Response, Compensation, and Liability Act
Public Law 102-579	Waste Isolation Pilot Plant Land Withdrawal Act [as amended by Public Law 104-201]
10CFR Part 830	Nuclear Safety Management, February 2001
10CFR Part 835	Occupational Radiation Protection, December 1993
29 CFR Part 1910	Occupational Safety and Health Standards, June 1974
30 CFR Part 57	Safety and Health Standards - Underground Metal and Nonmetal Mines, January 1985
40 CFR Part 61, Subpart H	Subpart H - National Emission Standards for Emissions of Radionuclides Other than Radon from Department of Energy Facilities; 40 CFR Part 61, National Emission Standards for Hazardous Air Pollutants, December 1989
40 CFR Part 191, Subpart A	Subpart A - Environmental Standards for Management and Storage; 40 CFR 191, Environmental Radiation Protection for Management and Disposal of Spent Nuclear Fuel, High-level and Transuranic Radioactive Wastes, November 1985
40 CFR Part 261	Identification and Listing of Hazardous Waste, May 1980
40 CFR Part 262	Standards Applicable to Generators of Hazardous Waste, May 1980
40 CFR Part 264	Standards for Owners and Operators of Hazardous Waste Treatment, Storage, and Disposal Facilities, May 1980
40 CFR Part 265	Interim Status Standards for Owners and Operators of Hazardous Waste Treatment, Storage, and Disposal Facilities, May 1980
40 CFR Part 268	Land Disposal Restrictions, May 1980
40 CFR Part 270	EPA Administered Permit Programs: The Hazardous Waste Permit Program, April 1983
40 CFR Part 280	Technical Standards and Corrective Action Requirements for Owners and Operators of Underground Storage Tanks, September 1988
DOE O 151.1A	Comprehensive Emergency Management System
DOE O 232.1A	Occurrence Reporting and Processing of Operations Information.
DOE O 414.1A	Quality Assurance
DOE O 420.1	Facility Safety
DOE O 430.1A	Life-Cycle Asset Management
DOE O 433.1	Maintenance Management Program for DOE Nuclear Facilities
DOE O 435.1	Radioactive Waste Management
DOE O 451.1B	National Environmental Policy Act Compliance Program
DOE Order 5400.1	General Environmental Protection Program
DOE Order 5480.4	Environmental Protection, Safety, and Health Protection Standards,
DOE Order 5480.19	Conduct of Operations Requirements for DOE Facilities
DOE Order 5480.20A	Personnel Selection, Qualification, Training Requirements for DOE Nuclear Facilities
DOE Order 5480.21	Unreviewed Safety Questions
DOE Order 5480.22	Technical Safety Requirements
DOE Order 5480.23	Nuclear Safety Analysis Reports
DOE Order 6430.1A	General Design Criteria, 1989 (for reference only, superceded by DOE O 420.1 and DOE O 430.1A)

Note: Conversion to, and implementation of, selected applicable DOE O series Orders are not required until inclusion into Managing and Operating Contractor contracts. As such, demonstration of compliance with applicable Orders, replacing any listed above, will be included in the appropriate Annual SAR Update when the Orders become effective and are implemented at WIPP.

SITE CHARACTERISTICS
TABLE OF CONTENTS

SECTION TITLE PAGE NO.

2.1 Geography and Demography of the Area Around the WIPP Facility 2.1-1
2.1.1 WIPP Facility Location and Description 2.1-1
2.1.2 Exclusion Area Land Use and Control 2.1-3
2.1.2.1 Authority 2.1-3
2.1.2.2 Agricultural Uses 2.1-3
2.1.2.3 Water Uses 2.1-3
2.1.2.4 Industrial and Commercial Facilities 2.1-3
References for Section 2.1 . . . . . 2.1-4

2.2 Nearby Industrial, Transportation and Military Facilities 2.2-1
2.2.1 Industrial and Commercial Facilities 2.2-1
2.2.2 Extractive Activities 2.2-1
2.2.3 Oil and Gas Pipelines 2.2-1
2.2.4 Waterways 2.2-2
2.2.5 Military Facilities 2.2-2
2.2.6 Airports and Aviation Routes 2.2-2
2.2.7 Land Transportation 2.2-2
2.2.7.1 Roads and Highways 2.2-2
2.2.7.2 Railroads 2.2-2
2.2.8 Projected Industrial Growth 2.2-3

2.3 Demographics and Land Use in the Carlsbad Resource Area 2.3-1
2.3.1 Demographics 2.3-1
2.3.2 Land Use at the WIPP Site 2.3-1
2.3.3 Land Use in the Carlsbad Resource Area 2.3-2
2.3.3.1 Ranching 2.3-2
2.3.3.2 Farming 2.3-2
2.3.3.3 Recreation 2.3-2
2.3.3.4 Tourism 2.3-3
References for Section 2.3 . . . . . 2.3-4

2.4 Meteorology 2.4-1
2.4.1 Recent Climatic Conditions 2.4-1
2.4.1.1 General Climatic Conditions 2.4-1
2.4.1.2 Regional Meteorological Conditions for Design and Operating Bases . . . 2.4-1
2.4.1.2.1 Heavy Precipitation 2.4-1
2.4.1.2.2 Thunderstorms and Hail 2.4-1
2.4.1.2.3 Tornadoes 2.4-1
2.4.1.2.4 Freezing Precipitation 2.4-2
2.4.1.2.5 Strong Winds 2.4-2
2.4.1.2.6 Restrictive Dispersion Conditions 2.4-2
2.4.1.2.7 Sandstorms 2.4-3
2.4.1.2.8 Snow 2.4-3
2.4.2 Local Meteorology 2.4-3
2.4.2.1 Data Sources 2.4-3

2.4.2.2 Temperature Summary 2.4-3
2.4.2.3 Precipitation Summary 2.4-3
2.4.2.4 Wind Speed and Wind Direction Summary 2.4-4
2.4.2.5 Topography 2.4-4
References for Section 2.4 . . . . . 2.4-5

2.5 Vibratory Ground Motion 2.5-1
2.5.1 Seismicity 2.5-1
2.5.1.1 Pre-1962 Earthquake Data 2.5-1
2.5.1.2 Comprehensive Listing of Earthquakes From All Studies - January 1, 1962 through September 30, 1986 . . . . . 2.5-2
2.5.1.2.1 Magnitudes 2.5-2
2.5.1.2.2 Completeness of the Earthquake Data Set 2.5-3
2.5.1.2.3 Recurrence Interval Formulas 2.5-4
2.5.1.2.4 Geographic Distribution of Earthquakes 2.5-5
2.5.2 Geologic Structures and Tectonic Activity 2.5-6
2.5.3 Correlation of Earthquake Activity with Geologic Structures or Tectonic Provinces 2.5-8
2.5.4 Probabilistic Earthquake Potential 2.5-9
2.5.4.1 Acceleration Attenuation 2.5-9
2.5.4.2 Source Zone Recurrence Formulas and Maximum Magnitudes 2.5-11
2.5.4.3 Calculation of Risk Curves 2.5-15
2.5.5 Design Basis Earthquake 2.5-18
References for Section 2.5 . . . . . 2.5-20

SITE CHARACTERISTICS
LIST OF FIGURES

FIGURE	TITLE	PAGE NO.
Figure 2.1-1	Region Surrounding the WIPP Facility	2.1-5
Figure 2.1-2	WIPP Facility Boundaries	2.1-6
Figure 2.2-1	Natural Gas Wells, Oil Wells and Related Information Within a 10 Mile Radius	2.2-4
Figure 2.2-2a	1995 Natural Gas Pipelines and Well, 5 Mile Radius	2.2-5
Figure 2.2-2b,	Explanation to Figure 2.2-2a	2.2-6
Figure 2.2-3	Airports and Aviation Routes Adjacent to the WIPP Facility	2.2-7
Figure 2.4-1	Monthly Precipitation for the WIPP Site from 1990 through 1994	2.4-7
Figure 2.4-2	1991 Annual Windrose - WIPP Site	2.4-8
Figure 2.4-3	1992 Annual Windrose - WIPP Site	2.4-9
Figure 2.4-4	1993 Annual Windrose - WIPP Site	2.4-10
Figure 2.4-5	1994 Annual Windrose - WIPP Site	2.4-11
Figure 2.4-6	1995 Annual Windrose - WIPP Site	2.4-12
Figure 2.4-7	1996 Annual Windrose - WIPP Site	2.4-13
Figure 2.4-8	1997 Annual Windrose - WIPP Site	2.4-14
Figure 2.4-9	1998 Annual Windrose - WIPP Site	2.4-15
Figure 2.4-10	1999 Annual Windrose - WIPP Site	2.4-16
Figure 2.4-11A	Terrain Elevations Out to 5 Miles from Center of the WIPP Facility	2.4-17
Figure 2.4-11B	Terrain Elevations Out to 5 Miles from Center of the WIPP Facility	2.4-18
Figure 2.4-11C	Terrain Elevations Out to 5 Miles from Center of the WIPP Facility	2.4-19
Figure 2.4-11D	Terrain Elevations Out to 5 Miles from Center of the WIPP Facility	2.4-20
Figure 2.5-1	Earthquakes Located Using Macroseismic or Regional Seismographic Data 1923 - 1977	2.5-23
Figure 2.5-2	Valentine, Texas, Earthquake Isoseismals	2.5-24
Figure 2.5-3	Earthquakes Located with the Help of Data from Station CLN(April 1974 - February 1979)	2.5-25
Figure 2.5-4a	Earthquakes Location Using Kermit Array Data November 1975 through July 1977	2.5-26
Figure 2.5-4b	Explanation to Figure 2.5-4a	2.5-27
Figure 2.5-5	Histograms of Number of Earthquakes: 1 January 1962 through 30 September 1986	2.5-28
Figure 2.5-6	Earthquakes Recurrence Data (Log N versus M): 1 January 1962 through 30 September 1986	2.5-29
Figure 2.5-7	Earthquake Recurrence Data (Log N versus M): 18 May 1974 through 24 July 1980 and 29 August 1983 through 30 September 1986	2.5-30
Figure 2.5-8	Epicenters for All Located Earthquakes: 1 January 1962 through 30 September 1986	2.5-31
Figure 2.5-9	Epicenters for All Located Earthquakes: 5 April 1974 through 6 October 1978	2.5-32
Figure 2.5-10	Epicenters for Located Earthquakes with M≥2.5: 1 January 1962 through 30 September 1986	2.5-33
Figure 2.5-11	Epicenters for Located Earthquakes with M≥2.5: 1 January 1962 through 3 February 1965	2.5-34
Figure 2.5-12	Epicenters for Located Earthquakes with M≥2.5: 4 February 1965 through 9 March 1968	2.5-35
Figure 2.5-13	Epicenters for Located Earthquakes with M≥2.5: 10 March 1968 through 13 April 1971	2.5-36
Figure 2.5-14	Epicenters for Located Earthquakes with M≥2.5: 14 April 1971 through 17 May 1974	

. . . . . 2.5-37
Figure 2.5-15 Epicenters for Located Earthquakes with M≥2.5: 18 May 1974 through June 21, 1977 . . . . . 2.5-38
Figure 2.5-16 Epicenters for Located Earthquakes with M≥2.5: 22 June 1977 through 24 July 1980 . . . . . 2.5-39
Figure 2.5-17 Epicenters for Located Earthquakes with M≥2.5: 25 July 1980 through 28 August 1983 . . . . . 2.5-40
Figure 2.5-18 Epicenters for Located Earthquakes with M≥2.5: 29 August 1983 through 30 September 1986 . . . . . 2.5-41
Figure 2.5-19 Earthquakes Located Using Macroseismic or Regional Seismographic Data 1923 - 1977 and Suggested Site Subregions 2.5-42
Figure 2.5-20 Site Region Structural Features and the Great Plains-Basin and Range Physiographic Boundary 2.5-43
Figure 2.5-21 Earthquakes Located with the Help of Data from Station CLN and Suggested Site Subregions 2.5-44
Figure 2.5-22 Recommended Attenuation Curves 2.5-45
Figure 2.5-23 Algermissen and Perkins Seismic Source Zones 2.5-46
Figure 2.5-24 Structural Features in the WIPP Site Region 2.5-47
Figure 2.5-25 Quadrilateral Representation of Algermissen and Perkins Source Zones 2.5-48
Figure 2.5-26 Alternate Source Geometries 2.5-49
Figure 2.5-27 Risk Curves from Basin and Range or Rio Grande Rift Seismicity 2.5-50
Figure 2.5-28 Risk Curves from Central Basin Platform Seismicity 2.5-51
Figure 2.5-29 Risk Curves from WIPP Facility Source Zone Seismicity 2.5-52
Figure 2.5-30 Generation of Total WIPP Facility Seismic Risk Curve Individual Source Risk Curves 2.5-53
Figure 2.5-31 Total WIPP Facility Risk Curve Extrema 2.5-54

SITE CHARACTERISTICS
LIST OF TABLES

TABLE	TITLE	PAGE NO.
Table 2.2-1	Aviation Routes Within 5 Miles (8 kilometers) of the WIPP Facility	2.2-8
Table 2.4-1	Maximum Wind Speeds for Roswell, New Mexico	2.4-21
Table 2.4-2	Recurrence Intervals for High Winds in Southeastern New Mexico	2.4-22
Table 2.4-3	Seasonal Frequencies of Inversions	2.4-23
Table 2.4-4	Seasonal Values of Mean Mixing Heights	2.4-24
Table 2.4-5	Annual Average, Maximum, and Minimum Temperatures	2.4-25
Table 2.5-1	Earthquakes Occurring Before 1962 and Centered Within 300 Km of the WIPP Facility	2.5-55
Table 2.5-2	Modified Mercalli Intensity Scale of 1931	2.5-56
Table 2.5-3	Instrumental Origin Times, Locations and Magnitudes of Earthquakes	2.5-57
Table 2.5-4	Risk Curve Parameters	2.5-67

This page intentionally blank

SITE CHARACTERISTICS

This Chapter provides information on the location of the WIPP facility and the site characteristics to support and clarify assumptions used in the hazards and accident analysis to identify and analyze potential external and natural phenomena accident initiators and accident consequences external to the facility. Included is information on: (1) site geography, (2) demographics, (3) nearby industrial, transportation, and military facilities, (4) meteorology, (5) demographics and land use, and (6) seismicity. Information relating to ecology, extractable resources, water and air quality, environmental radioactivity, surface and ground water hydrology, and geology, necessary to support the long-term performance assessment of the repository, may be found in DOE/CAO-1996-2184, Title 40 CFR 191 Compliance Certification Application for the Waste Isolation Pilot Plant, October 1996.[1]

2.1 Geography and Demography of the Area Around the WIPP Facility

2.1.1 WIPP Facility Location and Description

The WIPP Facility is located in Eddy County in southeastern New Mexico (Figure 2.1-1). The center of the WIPP facility is approximately 103°47’27" W longitude and 32°22’11" N latitude.

Prominent natural features within five mi (8 km) of the center of the WIPP facility include Livingston Ridge and Nash Draw, which are located about five mi (8 km) west. Livingston Ridge, the most prominent physiographic feature near the WIPP facility, is a northwest facing bluff (about 75 ft [22.9 m] high) that marks the east edge of Nash Draw (a shallow drainage course about 5 mi [8 km] wide).

Other prominent natural features are the Pecos River which is about 12 mi (19.3 km) west at its nearest point, and the Guadalupe Mountains which include the Carlsbad Caverns National Park about 42 mi (67 km) and the Guadalupe Mountains National Park which is about 65 mi (104.5 km) west southwest. The nearest prominent man-made features are the city of Loving (with a 1990 population of 1243) which is 18 mi (29 km) west southwest, and the city of Carlsbad (with a 1990 population of 24,896) which is 26 mi (41.8 km) west.

The area of land that lies within the WIPP Site Boundary and committed to the WIPP facility is a square with sides measuring four mi (6.4 km) each. It contains 10,240 acres or 4,146 hectares (16 mi^2 or 41.4 km^2) including Sections 15-22 and 27-34 in township T22S, R31E. The area containing the WIPP facility surface structures is surrounded with a chain link fence and covers about 35 acres (14 hectares) in Sections 20 and 21 of T22S, R31E. This fenced area is known as the Property Protection Area. The location and orientation of the WIPP facility surface structures are shown in Figure 1.2-3. These structures include the Waste Handling Building (WHB) where radioactive waste is received and prepared for underground disposal, four shafts to the underground area, a Support Building containing laboratory and office facilities, showers, change rooms for underground workers, an Exhaust Filter Building (EFB), and a water supply system. Support structures outside of the chain link fence include sewage stabilization ponds, other auxiliary buildings, two mined-rock (salt) piles, and collection ponds for managing site runoff.

There are no industrial, commercial, institutional, recreational or residential structures within the WIPP Site Boundary and no through public highways, railways or waterways traverse the WIPP Site Boundary. Access to the WIPP facility is provided by two access roads that connect with U.S. Highway 62/180, 13 mi (21 km) to the north, and NM Highway 128 (Jal Highway), 4 mi (6.4 km) to the south. The north access road, which connects the site to U.S. Highway 62/180, is an access road built specifically for the DOE to transport TRU mixed waste from the highway to the site. The north access road is restricted for use by the personnel, agents and contractors of the DOE on official business related to the WIPP Project, or to personnel, permittees, licensees or lessees of the BLM. The south access road is county highway maintained by Eddy County and multiple-use access is allowed unless it is determined that access by industry or the general public represents a significant safety risk to WIPP personnel. There are four natural gas pipelines that traverse the vicinity of the WIPP facility. One pipeline that is within the WIPP Site Boundary is oriented northeast southwest and is about 1.2 mi (1.9 km) north of the center of the WIPP surface structures at its closest point. This pipeline, along with other pipelines in the area of the WIPP facility, are discussed in Section 2.2.3.

The areas that have been designated as subdivisions within the WIPP Site Boundary are defined below and depicted in Figure 2.1-2.

The Property Protection Area is an area of approximately 35 acres (14 hectares) surrounded by a chain link fence. Most of the WIPP facility surface structures are located within this area. Except for the salt storage piles, and the wastewater stabilization ponds.

The Exclusive Use Area is an area of approximately 277 acres (112 hectares) surrounded by a barbed wire fence and posted no trespassing. Review of the WIPP Land Management Plan indicates that public access to the WIPP 16 section area up to the DOE "Exclusive Use Area" is allowed for grazing purposes and up to the DOE "Off-limits Area" for recreational purposes. Public access is controlled by the WIPP 24-hour security force, which regularly patrols the restricted access areas (Section 8.6).

The Off-limits Area (shown in Figure 2.1-2) is an area of approximately 1,421 acres (575 hectares) and is posted no trespassing. Access to this area will be restricted.

The WIPP Site Boundary encompasses an area of 10,240 acres (4,146 hectares) (16 sections). The DOE will not permit subsurface mining, drilling, or resource exploration unrelated to the WIPP Project within the WIPP Site Boundary during facility operation or after decommissioning. This prohibition precludes slant drilling under the WIPP facility from within or outside the WIPP facility, with the exception of existing rights under federal oil and gas leases No. NMNM 02953 and NMNM 02953C, which shall not be affected unless a determination is made to require the acquisition of such leases to comply with final disposal regulations or with the solid waste disposal act (42 U.S.C. 6901 et seq).[2]

Within the Property Protection Area, public access is restricted to employees and approved visitors. Within the Exclusive Use Area access is restricted to authorized personnel and vehicles. Mining and drilling for purposes other than those which support the WIPP project are prohibited within the 16-section (Land Withdrawal Act (LWA). In addition, small areas have been fenced to control access to material storage areas, borrow pits, the sewage stabilization ponds, and biological study plots.

A zone, provided between the mined area underground and the WIPP Site Boundary is a minimum of 1 mi (1.6 km) wide. This thickness was specified based on recommendations made by Oak Ridge National Laboratory (ORNL). The ORNL recommendation of 1 to 5 mi (1.6 to 8 km) for the size of the zone of intact salt was to preclude unacceptable penetration of the salt formation. The ORNL stated that the actual size of the zone must be based on site dependent factors including drilling operations, mining operations and salt dissolution rates. This was addressed in the Geological Characterization Report [3]

where the authors state that the 1 mi (1.6 km) thickness should provide more than 250,000 years of isolation using very conservative dissolution assumptions.

2.1.2 Exclusion Area Land Use and Control

2.1.2.1 Authority

The 10,240 acres (4,146 hectares) that lie within the WIPP Site Boundary are on federal land. During construction all the federal lands within the WIPP Site Boundary were managed in accordance with the terms of Public Land Order 6403 and a DOE/Bureau of Land Management (BLM) Memorandum of Understanding (MOU)[4] and the BLM Resource Management Plan.

During operations, the area within the WIPP Site Boundary will remain under federal control. This includes all facility areas described in Section 2.1.1.1

On October 30, 1992, the WIPP (LWA), Public Law 102-579 as amended by Public Law 104-201, was signed by President Bush transferring the land from the Department of the Interior (DOI) to the DOE. Consistent with the mission of the WIPP facility, lands within and around the WIPP Site Boundary are administered according to a multiple land use policy. Mining and Drilling for purposes other than those which support the WIPP project are prohibited within the 16-section LWA area subject such conditions and restrictions as may be necessary to permit the conduct of WIPP-related activities.[2]

2.1.2.2 Agricultural Uses

All the land within the WIPP Site Boundary up to the Exclusive Use Area has been leased for grazing, which is the only significant agricultural activity in the vicinity of the WIPP facility. The Smith Ranch, owned by Kenneth Smith, Inc. of Carlsbad, New Mexico, has lease rights to 2880 acres (1,166 hectares) within the northern portion of the WIPP Site Boundary. J. C. Mills of Abernathy, Texas, owner of the Mills Ranch, has lease rights to 7,360 acres (2,980 hectares) within the southern portion of the WIPP Site Boundary.

2.1.2.3 Water Uses

There are no significant uses of surface or groundwater in the vicinity of the WIPP facility. Several windmills have been erected throughout the area to pump groundwater for livestock watering. Additionally, several ponds have been created to capture runoff for livestock.

2.1.2.4 Industrial and Commercial Facilities

There are no industrial surface facilities within a 5 mi (8 km) radius of the WIPP facility. Ranching is the only commercial operation within 5 mi (8 km) of the facility, with the exception of oil and gas related activities. The 5 mi (8 km) radius encompasses grazing allotments of three separate ranches; however, only one ranch house is located in the area. It is about 3.5 mi (5.6 km) from the center of the WIPP facility in the south southwest sector. There are four potash mines and two chemical processing plants (adjacent to the mines) between 5 and 10 mi (8.0 to 16.1 km) of the WIPP facility.

References for Section 2.1

1. DOE/CAO-1996-2184, Title 40 CFR 191 Compliance Certification Application for the Waste Isolation Pilot Plant, October 1996.

2. Public Law 102-579, Waste Isolation Pilot Plant Land Withdrawal Act, US Congress, October, 1992 [as amended by Public Law 104-201].

3. SAND 78-1596, Geological Characterization Report for the WIPP Site, Southeastern New Mexico Sandia National Laboratories, Albuquerque, NM, 1978

4. Memorandum of Understanding, Bureau of Land Management and the Department of Energy, July 1984.

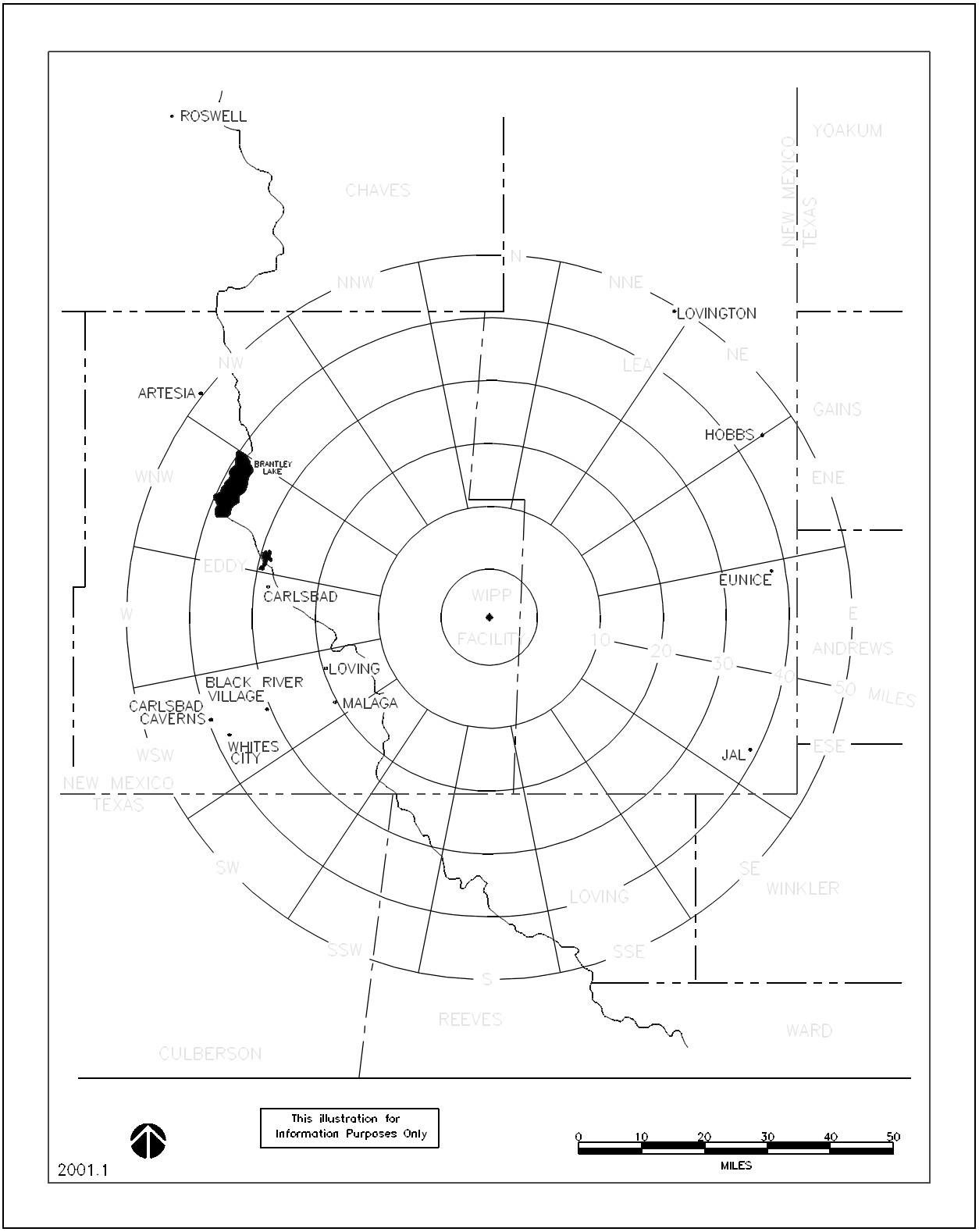

Figure 2.1-1 Region Surrounding the WIPP Facility

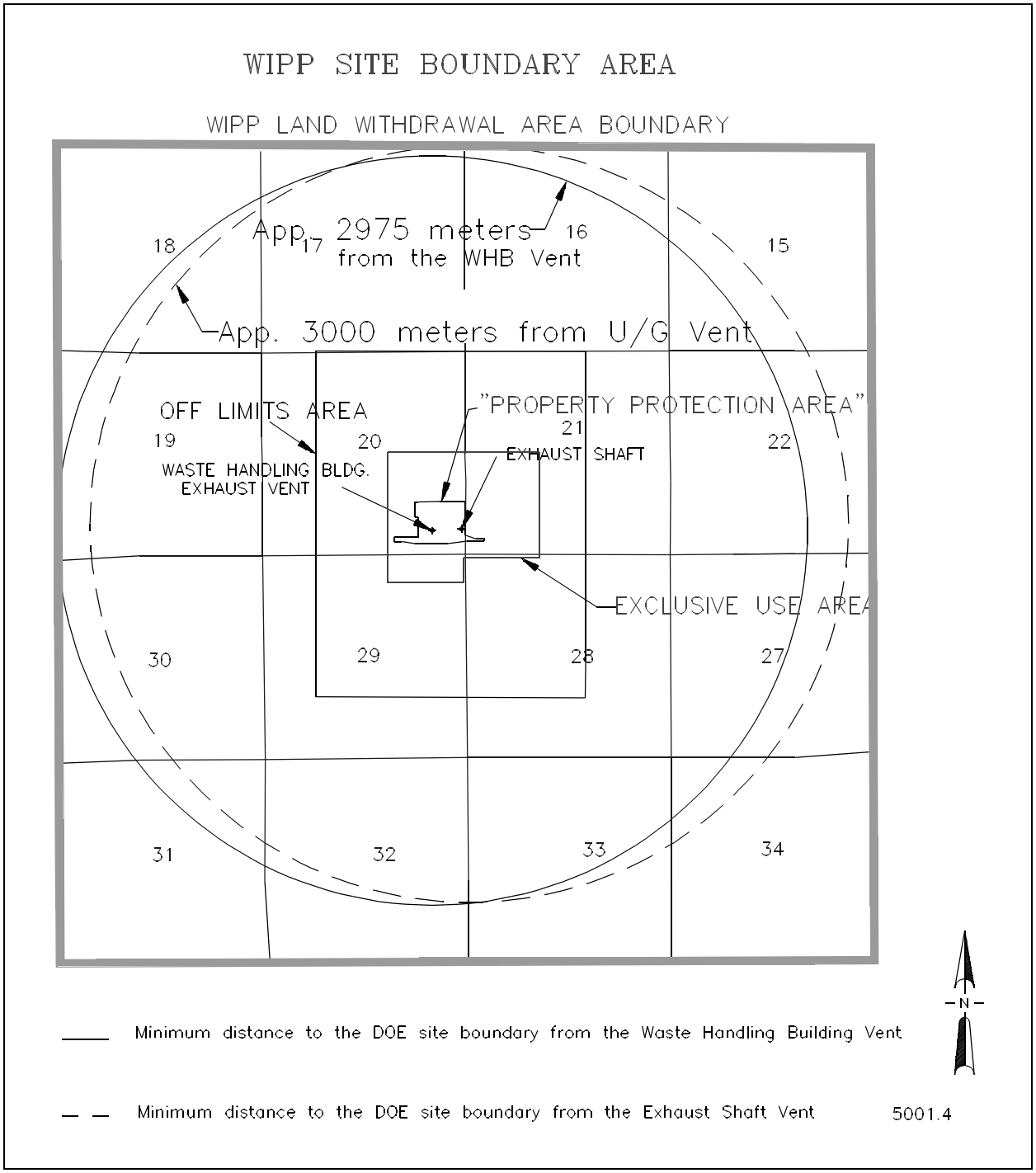

Figure 2.1-2 WIPP Facility Boundaries

2.2 Nearby Industrial, Transportation and Military Facilities

The extractive activities, transportation routes, and military operations that may have a potential affect on operations at the WIPP facility are discussed in this section.

2.2.1 Industrial and Commercial Facilities

There are numerous oil and gas related facilities within a 5 mi (8 km) radius of the WIPP facility. The 5 mi (8 km) radius encompasses grazing allotments of three separate ranches; however, only one ranch house is located in the area. It is about 3.5 mi (5.6 km) from the center of the WIPP facility in the south southwest sector. There are four potash mines and two chemical processing plants (adjacent to the mines) between 5 and 10 mi (8.0 and 16.1 km) of the WIPP facility.

2.2.2 Extractive Activities

Within a 5 mi (8 km) radius from the center of the WIPP Land Withdrawal Area (LWA), both oil and gas are extracted below the Salado formation. The majority of the newer wells produce oil and gas from the Brushy Canyon formation of the Delaware Mountain Group. Gas wells typically produce from the deeper Pennsylvanian-age formations (Atoka, Strawn, and Morrow formations). As of April 1995, there were 136 oil wells (some which produce both oil and gas), 21 gas wells, and 21 plugged wells within 5 mi (8 km) of the Land Withdrawal Act (LWA) boundary (Figure 2.2-2a). The completion of these wells is stratigraphically below the repository horizon. There are likewise an additional 292 oil wells, 47 gas wells, and 83 plugged wells within 10 mi (16.1 km) of the LWA boundary (Figure 2.2-1). The plugged wells include both wells that are considered "dry holes" and wells that are no longer productive and have been permanently sealed.

Besides the oil and gas extractive activities, there are four active potash mines within 10 mi (16.1 km) of the WIPP LWA. Potash is extracted from the McNutt Potash member which is stratigraphically above the WIPP repository horizon.

2.2.3 Oil and Gas Pipelines

There are no crude oil pipelines within 5 mi (8 km) of the WIPP facility. There are, however, sixteen natural gas pipelines located within a 5 mi (8 km) radius of the WIPP facility. Many producing wells within the 10 mi (16.1 km) radius of the WIPP are connected to tank batteries by gathering systems of flexible, plastic tubing. These lines are typically buried at the time of installation; however, there are areas where these lines rest upon the surface of the ground. They carry a mixture of crude oil, natural gas, and produced waters. At the accumulation tanks, these fluids are separated, and the gas is then fed into pipelines. Thirteen of these pipelines have right-of-way lease permits issued by the U.S. Department of the Interior (DOI), BLM for access to federal land, while four have permits issued by the State of New Mexico, State Land Office, for access to state lands. Two pipelines require both federal and state right-of-way lease permits. There is one pipeline located on federal land for which no right-of-way lease permit information is available. The natural gas pipelines are owned and operated by three companies:

- El Paso Natural Gas Company, El Paso, Texas;
- Natural Gas Pipeline Company of America, Chicago, Illinois;
- Transwestern Pipeline Company, Roswell, New Mexico

Figure 2.2-2a shows the location of each pipeline within 5 mi (8 km) of the WIPP facility, along with pertinent information regarding each pipeline.

One major non-oil or gas pipeline lies within the WIPP Site Boundary. This is a 10 in (25.4 cm) City of Carlsbad water pipeline that provides the WIPP facility with potable water.

2.2.4 Waterways

There are no navigable waterways within a 5 mi (8 km) radius of the WIPP facility. The nearest river is the Pecos River which is 12 mi (19.3 km) west of the WIPP facility.

2.2.5 Military Facilities

There are no military facilities within a 5 mi (8 km) radius of the WIPP facility. Holloman Air Force Base is the nearest military facility to the WIPP Site and is located 138 mi (222.1 km) to the northwest.

2.2.6 Airports and Aviation Routes

There are no airports within a 10 mi (16.1 km) radius of the site. The nearest airstrip, 12 mi (19.3 km) north of the WIPP facility, is privately operated by Transwestern Pipeline Company. The nearest commercial airport is Cavern City, 28 mi (45.1 km) west of the WIPP facility near Carlsbad. Other airports in the area are Eunice (32 mi [51.5 km] east), Hobbs Airport (42 mi [67.6 km]) northeast), Jal (40 mi [64.4 km] southeast), Lovington (50 mi [80.5 km] northeast), and Artesia (51 mi [82.1 km] northwest). The relationship of these airports to the WIPP facility is shown in Figure 2.2-3.

Portions of two federal airways are within 5 mi (8 km) of the WIPP facility. Each airway is 10 mi (16.1 km) wide. The centerline of low altitude airway V-102 is 3 mi (4.8 km) northwest of the WIPP facility and high altitude airway J-15 is 4 mi (6.4 km) northeast of the WIPP facility at their nearest points. These airways are shown in Figure 2.2-3. Traffic data for these airways are given in Table 2.2-1. The combined traffic on both routes is about 28 Instrument Flight Rule (IFR) flights per peak day. There are no approach or landing zones within 5 mi (8 km) of the WIPP facility.

2.2.7 Land Transportation

2.2.7.1 Roads and Highways

Other than the highways that provide north or south access, only one other highway lies within a 5 mi (8 km) radius. New Mexico Highway 128, which is between 4 and 5 mi (6.4 to 8 km) southwest of the WIPP facility (Figure 1.2-1). It connects the small community of Jal with NM 31, which leads into Loving and provides access to Carlsbad. New Mexico Highway 128 is used by ranchers, school buses, potash miners, and by oil and gas company vehicles occasionally transporting drilling rigs (wide loads) to sites in the area. In 1985, it had an average daily traffic flow of about 400 vehicles. Several dirt roads in the area are maintained for ranching, pipeline maintenance, and access to drilling sites.

2.2.7.2 Railroads

Except for the rail spur that serves the WIPP facility, there are no railroad lines within the 5 mi (8 km) radius of the WIPP facility. Rail lines to International Minerals and Chemical Corp. Main Plant and Nash Draw operation, and the Mississippi Chemical Corp. East plant, all potash mining operations, are located between 6 and 10 mi (9.7 to 16.1 km) of the WIPP facility. All railroad lines within the general vicinity of the WIPP facility are used specifically to transport potash ore.

2.2.8 Projected Industrial Growth

While no industrial activity occurs within 5 mi (8 km) of the WIPP facility, active potash mining is occurring. These ores are extracted from the Salado formation but are brought to the surface further than 5 mi (8 km) from the WIPP. Other extractive activities are oil and gas production (as detailed in section 2.2.2). No extractive activity is allowed within the LWA with the exception of section 31 (the southwest corner section of the LWA). There is currently one gas well producing from that section below the 6000 ft (1828.8 m) land withdrawal designation. This well was slant drilled from section 6 of Township 23 South. The other fifteen sections of the LWA are withdrawn to the center of the earth. Other permit applications for slant drilling into section 31 from outside sections have been denied by the BLM.

Four potash mining operations located around the WIPP facility were contacted concerning their anticipated growth. If these operations expand, there is a possibility that at least two new shafts will be sunk in the approximate 2 to 5 mi (3 to 8 km) radius. Plans for expansion are not firm because they are dictated in most cases by the market conditions for potash. Even if this expansion were to occur, it would not pose a safety risk for the WIPP facility since surface and underground operations would be restricted to areas outside the WIPP Site Boundary.

Except for the possible potash mining expansion previously discussed, no significant increase in future economic activity is forecast within 5 mi (8 km) of the WIPP facility.

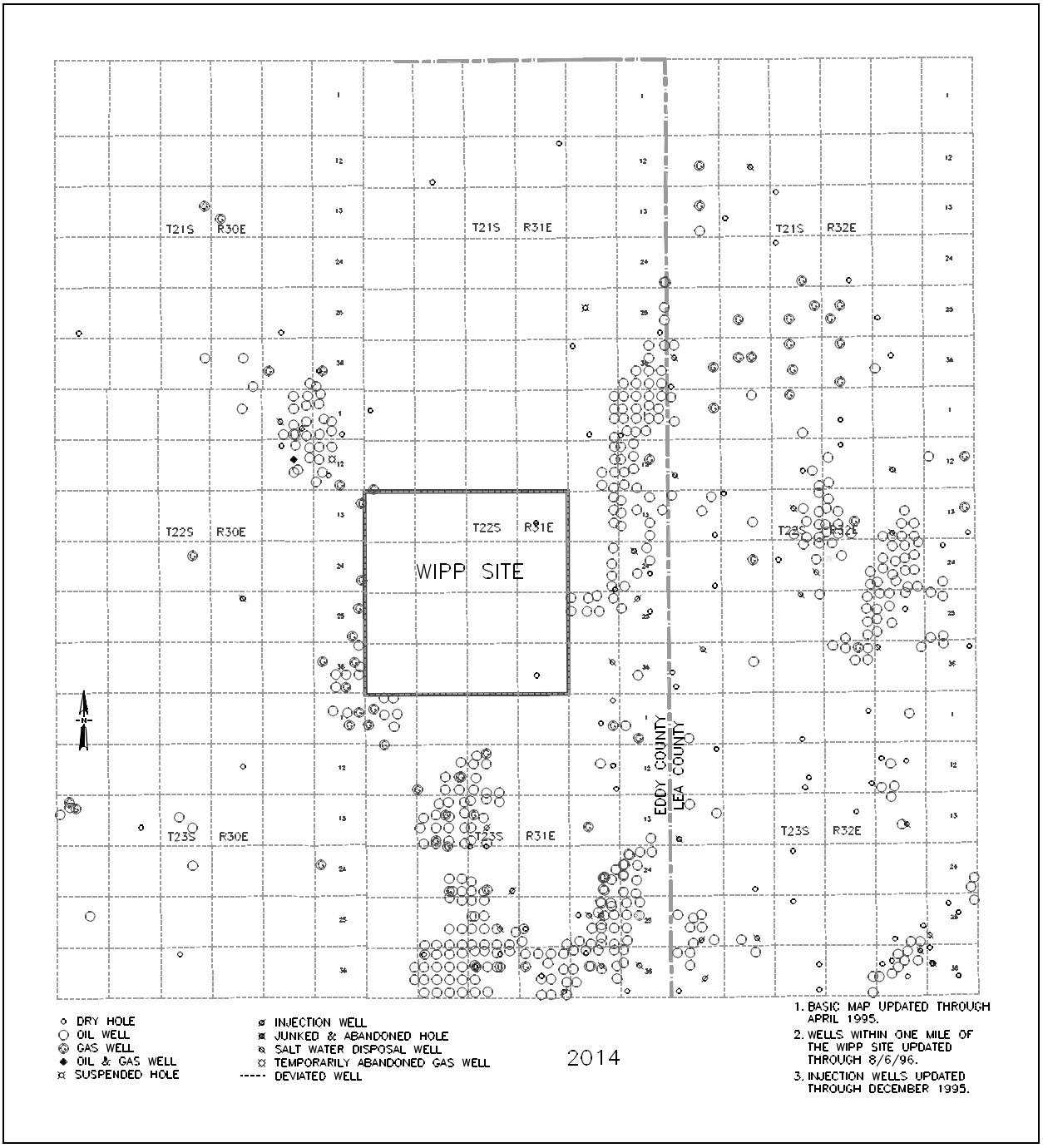

Figure 2.2-1 Natural Gas Wells, Oil Wells and Related Information Within a 10 Mile Radius

(1 kilometer=0.62 miles)

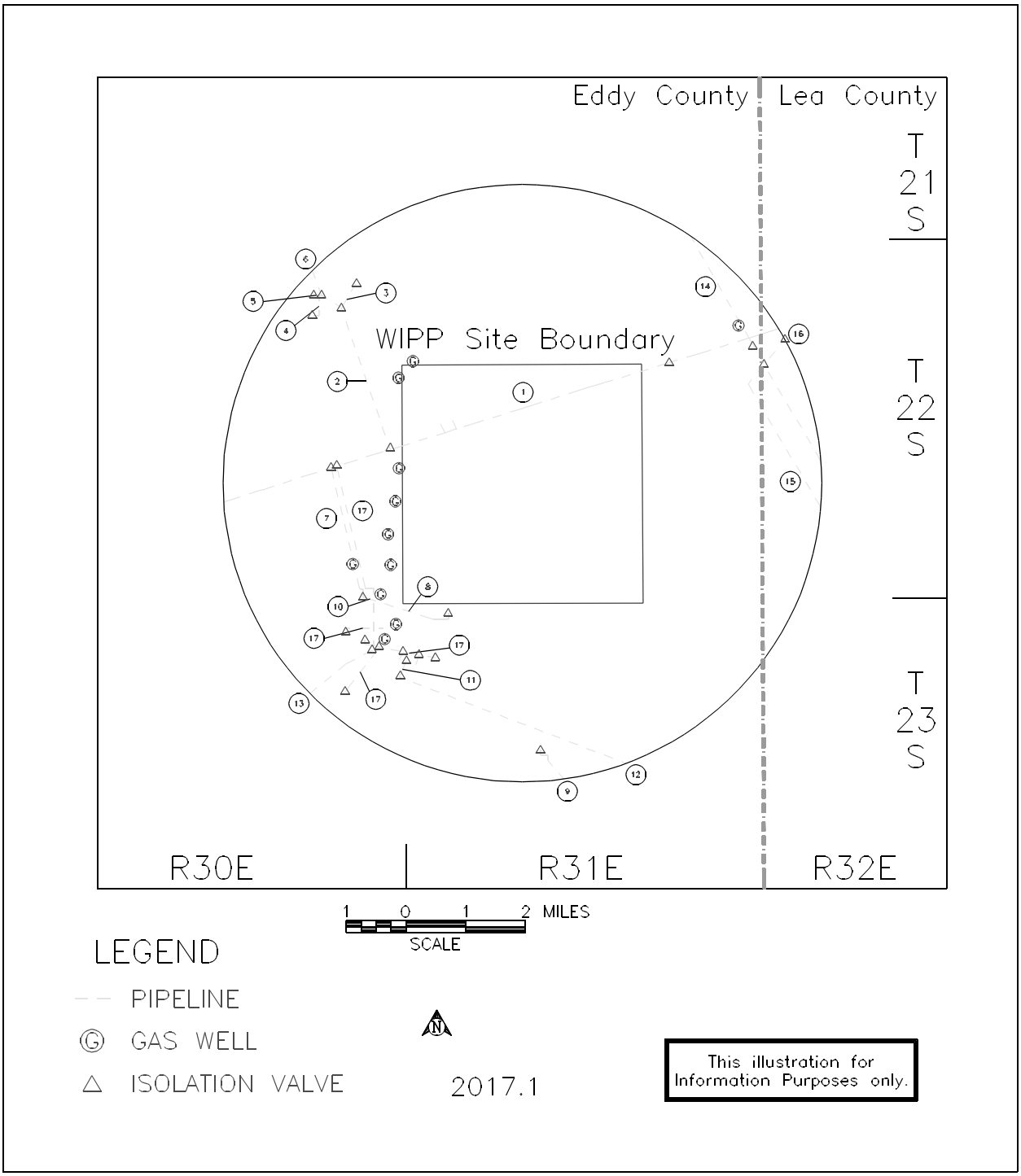

Figure 2.2-2a 1995 Natural Gas Pipelines and Well, 5 Mile Radius

(1 kilometer=0.62 miles)

Figure 2.2-2b, Explanation to Figure 2.2-2a

1. El Paso Natural Gas Co., Eunice-Carlsbad Line (LC060762) 12.75" Dia Gas Line, Built 1945, Located 1.125 miles NNW of WIPP. Operating Pressure 721 PSIG, Burial Depth 24".

2. El Paso Natural Gas Co., James "A" No. 1 (NM17321) 4.5"/8.625" Dia Gas Line, Built 1974, Located 2.375 miles WNW of WIPP. Operating Pressure 721 PSIG, Burial Depth 24".

3. El Paso Natural Gas Co., Cabana No. 1 (NM18432) 4.5" Dia Gas Line, Built 1974, Located 4.25 miles NW of WIPP. Operating Pressure 721 PSIG, Burial Depth 24".

4. El Paso Natural Gas Co., James "E" No. 1 (NM19974) 4.5" Dia Gas Line, Built 1974, Located 4.25 miles NW of WIPP. Operating Pressure 721 PSIG, Burial Depth 24".

5. El Paso Natural Gas Co., El Paso "201" Spur Line (NM20125) 4.5" Dia Gas Line, Built 1974, Located 4.625 miles NW of WIPP. Operating Pressure 721 PSIG, Burial Depth 24".

6. El Paso Natural Gas Co., James "C" No. 1 (RW18344) 6.625" Dia Gas Line, Built 1974, Located 4.625 miles NW of WIPP. Operating Pressure 721 PSIG, Burial Depth 24".

7. El Paso Natural Gas Co., James Ranch Unit No. 1 (NM046228) (RW14190) 4.5" Dia Gas Line, Built 1958, Located 3.06125 miles WSW of WIPP. Operating Pressure 721 PSIG, Burial Depth 24".

8. El Paso Natural Gas Co., James Ranch Unit No. 7 (NM26987) 4.5" Dia Gas Line, Built 1976, Located 2.625 miles SW of WIPP. Operating Pressure 721 PSIG, Burial Depth 24".

9. El Paso Natural Gas Co., Arco State No. 1 (RW17822) 6.625" Dia Gas Line, Built 1971, Located 4.625 miles S of WIPP. Operation Pressure 837, Burial Depth 24".

10. El Paso Natural Gas Co., Lateral EE-4 (NM16959/(RW18065) 4.5" Dia Gas Line, Built 1973, Located 3.125 miles SW of WIPP. Operating Pressure 1200 PSIG, Burial Depth 36".

11. Natural Gas Pipeline Co. Of America, Lateral EE-6 Built 1974, 4.5" Dia Gas Line, Built 1974, Located 3.2 miles SSW of WIPP. Operating Pressure 1200 PSIG, Burial Depth 36".

12. Natural Gas Pipeline Co. Of America, Lateral EE-3 (NM16029) 8.625" Dia Gas Line, Built 1972, Located 3.4 miles SSW of WIPP. Operating Pressure 1200 PSIG, Burial Depth 36".

13. Natural Gas Pipeline Co. Of America, Lateral EE-7 (NM22471) 4.5" Dia Gas Line, Built 1974, Located 4.7 miles SW of WIPP. Operating Pressure 1200 PSIG, Burial Depth 36".

14. Transwestern Pipeline Co., West Texas Lateral (NM070224) 24" Dia Gas Line, Built 1960, Located 4.5 miles ENE of WIPP. Operating Pressure 1200 PSIG, Burial Depth 30".

15. Transwestern Pipeline Co., West Texas Lateral (NM8722) 30" Dia Gas Line, Built 1969, Located 4.25 miles ENE of WIPP. Operating Pressure 930 PSIG, Burial Depth 30".

16. Transwestern Pipeline Co., Monument Lateral (NM073482) 10" Dia Gas Line, Built 1960, Located 4.5 miles ENE of WIPP. Operating Pressure 930 PSIG, Burial Depth 30".

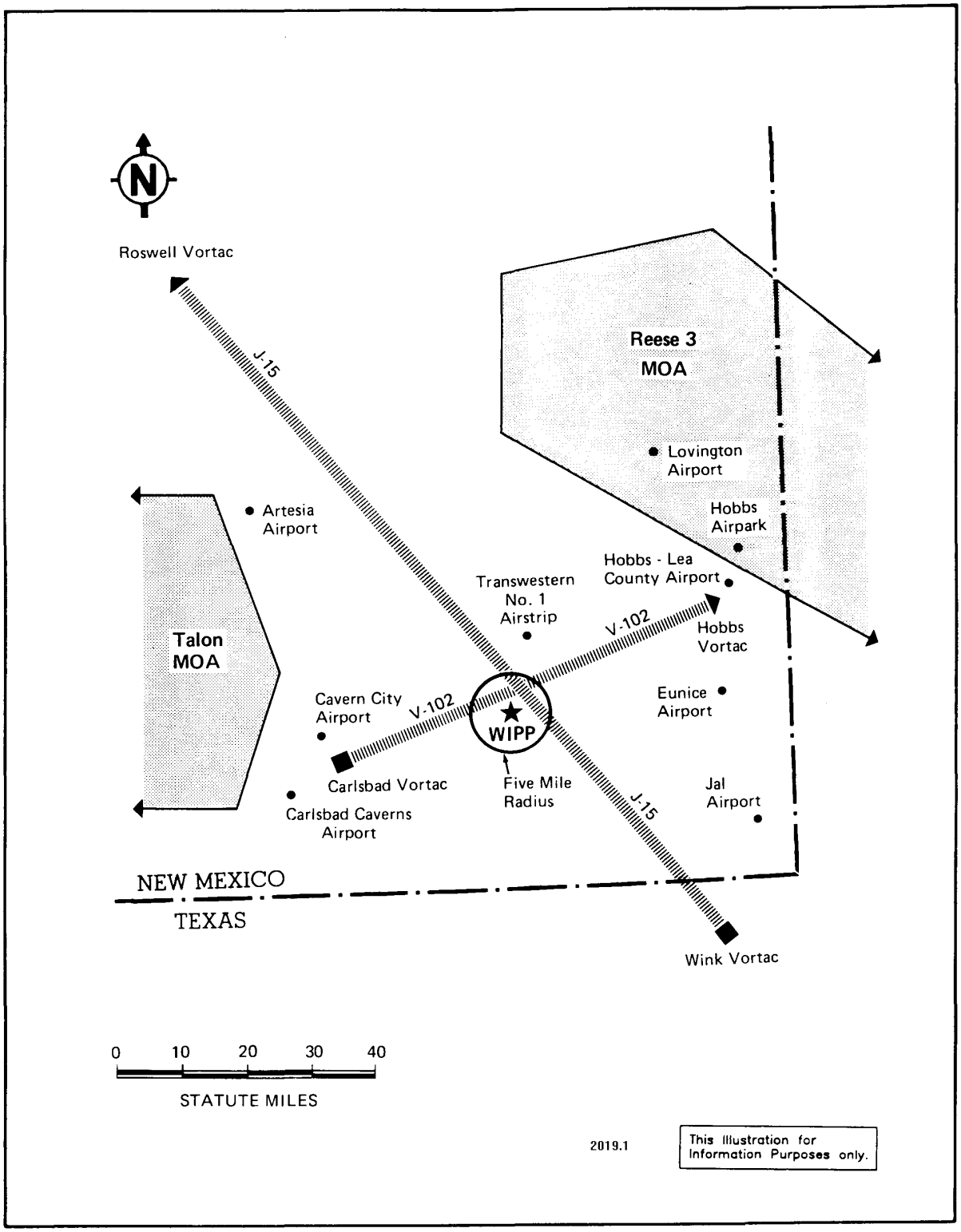

Figure 2.2-3 Airports and Aviation Routes Adjacent to the WIPP Facility

(1 kilometer=0.62 miles)

Table 2.2-1 Aviation Routes Within 5 Miles (8 kilometers) of the WIPP Facility*

Name of Route	Altitude	Destination	Minimum Type	Origin and Flights/Day	Aircraft Flight Rule
FAA V-102	3,000 ft AGL	Carlsbad VORTAC Hobbs VORTAC	Commercial, military, and private	5 **	IFR
FAA J-15	18,000 ft MSL	Wink VORTAC Roswell VORTAC	Commercial, military, and private	23	IFR

* U.S. Department of Transportation, Federal Aviation Administration, Air Traffic Service, "En Route IFR Peak Day Charts, FY 1976."

** Flights per day on V-102 does not include aircraft operating under Visual Flight Rules.

NOTE: 1976 was the last year day charts were logged by FAA. Local airfield does not monitor this information.

2.3 Demographics and Land Use in the Carlsbad Resource Area

2.3.1 Demographics

The WIPP is located in the Southeastern part of Eddy County, near Lea County. The population density of Eddy County is 11.63 persons per square mile (4.49 persons /km^2); the Lea County population density is 12.69 persons per square mile (4.90 persons/km^2) (Census of Population).[1]

Demographics for the communities surrounding the WIPP site are listed below, by county.

EDDY COUNTY

Community	Population	Location Relative to the WIPP Site
Artesia	10,610	53 mi (85.3 km) northwest
Carlsbad	24,896	26 mi (41.8 km) west
Loving	1,243	18 mi (29 km) west-southwest
Total Eddy County	48,605	

LEA COUNTY

Community	Population	Location Relative to the WIPP Site
Eunice	2,731	40 mi (64.4 km) east
Hobbs	29,115	40 mi (64.4 km) east
Jal	2,153	45 mi (72.4 km) southeast
Lovington	9,322	40 mi (80.5 km) northeast
Total Lea County	55,765	

2.3.2 Land Use at the WIPP Site

At present, land within 10 mi (16 km) of the site is used for potash-mining operations, active oil and gas wells, and grazing. This pattern is expected to change little in the future.

The Waste Isolation Pilot Plant Land Withdrawal Act (LWA) (Public Law 102-579 as amended by Public Law 104-201),[2] provides the DOE with lands for operation of the WIPP project. The law provides for the transfer of the WIPP site lands from the Department of the Interior (DOI) to the DOE and effectively withdraws the lands, subject to existing rights, from entry, sale, or disposition; appropriation under mining laws; and operation of the mineral and geothermal leasing laws. The LWA directed the Secretary of Energy to produce a management plan to provide for grazing, hunting and trapping, wild life habitat, the disposal of salt, and tailings and mining (PTB).[3]

There are no hydrocarbon production wells within the volumetric boundary defined by the LWA. One active well, referred to as James Ranch 13, was drilled in 1982 to tap gas resources beneath Section 31. This well was initiated in Section 6, outside the WIPP site boundary. The well enters Section 31 below a depth of 6,000 feet (1,829 meters) beneath ground level (PTB).[3]

Grazing leases have been issued for all land sections immediately surrounding the WIPP, with the exception of the 277 acre (112.1 hectare) Exclusive Use Area[5]. Grazing within the WIPP site lands operates within the authorization of the Taylor Grazing Act of 1934, the Federal Land Policy and Management Act (FLPMA), the Public Rangelands Improvement Act of 1978, and the Bankhead-Jones Farm Tenant Act of 1973. The responsibilities of the DOE include supervision of ancillary activities associated with grazing (e.g., wildlife access to livestock water development, assure water developments inside WIPP lands are configured according to the regulatory requirements, etc.) and ongoing coordination with respective allottees. Administration of grazing rights, including the collection of grazing fees, shall be in cooperation with the BLM in accordance with an existing Memorandum of Understanding (MOU) and the coinciding Statement of Work through guidance established in the East Roswell Grazing Environmental Impact Statement (DOE/WIPP 94-2033).[4] Portions of two grazing allotments administered by the BLM fall within the land withdrawal area: Livingston Ridge (No. 77027), and Antelope Ridge (No. 77032) (DOE/WIPP 93-004).[5]

2.3.3 Land Use in the Carlsbad Resource Area

Major land uses in the Carlsbad resource area include potash mining, oil and gas recovery (discussed previously), ranching, farming, recreation, and tourism.

2.3.3.1 Ranching

There are 286 ranching units in the Carlsbad resource area (New Mexico Agricultural Statistics).[6] The approximate areas, in acres (1 hectare= 2.47 acre), are as follows:

County	Total	Federal	State	Deeded
Eddy	2,675,000	1,627,827	577,225	470,149
Lea	2,812,160	416,960	1,199,221	1,195,979

The number of livestock located on these ranching units will vary depending upon grazing conditions. However, the number of livestock (in head) for the Carlsbad resource area as reported in the 1993 *New Mexico Agricultural Statistics*[6] are:

County	Cattle	Dairy Herd	Sheep	Goats/ Horses/Pigs
Eddy	25,000	9,100	12,000	1,200
Lea	22,000	7,200	5,800	1,560

2.3.3.2 Farming

There are approximately 160,000 acres (64,750 hectare) of farmland in the Carlsbad resource area. The principal crops grown include cotton, alfalfa, and sorghum grains. There are also significant quantities of pecans grown in this area, and minor amounts of truck vegetables.

2.3.3.3 Recreation

Due to the topography, climatic conditions, and wildlife in the area of the WIPP site, an extensive (non-facility based) variety of recreational opportunities are available to include: hunting for both big and small game animals; camping; horseback riding; hiking; watching wildlife (e.g., bird watching); and

sightseeing. The WIPP area contains significant biodiversity in addition to historic and prehistoric sites. These offer rewarding opportunities for scientific research and interpretive recreation.

2.3.3.4 Tourism

There are two national parks (Guadalupe Mountains and Carlsbad Caverns), a national forest (Lincoln), and two state parks (Living Desert Zoo and Gardens, and Brantley) located within or near the Carlsbad resource area. The Carlsbad Caverns National Park, which is 36 mi (58 km) southeast of the WIPP site, has approximately 1 million visitors per year. There are three dams on the Pecos River that provide recreational activities during the summer months. The closest surface water to WIPP (the Pecos River) is located about 12 mi (19.3 km) away.

References for Section 2.3

1. Census of Population, General Population Characteristics of New Mexico, Bureau of the Census. U.S. Department of Commerce, 1990

2. Public Law 102-579, Waste Isolation Pilot Plant Land Withdrawal Act, U.S. Congress, 1992 [as amended by Public Law 104-201].

3. WIPP-CAO-95-1014, Project Technical Baseline for Regulatory Compliance (PTB), United States Department of Energy, Carlsbad, N.M., Rev. 0, April 1995.

4. DOE/WIPP 94-2033, Waste Isolation Pilot Plant Annual Site Environmental Report for Calendar Year 1993, September, 1994, Carlsbad, NM, 1994a.

5. DOE/WIPP 93-004, Waste Isolation Pilot Plant Land Management Plan, 1993b.

6. New Mexico Agricultural Statistics, U. S. Department of Agriculture, New Mexico Agricultural Statistics Service, Las Cruces, NM, 1993.

2.4 Meteorology

2.4.1 Recent Climatic Conditions

Current climatic conditions are provided to allow for the assessment of impacts of these factors on the disposal unit and the site. The WIPP facility does not rely on climatic conditions to control waste migration; however, meteorological information is used in the evaluation of the air pathway during operation of the facility.

2.4.1.1 General Climatic Conditions

The climate of the region is semiarid, with generally mild temperatures, low precipitation and humidity, and a high evaporation rate. Winds are mostly from the southeast and moderate. In late winter and spring, there are strong west winds and dust storms. During the winter, the weather is often dominated by a high-pressure system situated in the central portion of the western United States and a low-pressure system located in north-central Mexico. During the summer, the region is affected by a low-pressure system normally situated over Arizona.[1]

2.4.1.2 Regional Meteorological Conditions for Design and Operating Bases

2.4.1.2.1 Heavy Precipitation

The maximum 24 hour rainfall at Roswell was 5.65 in (14.4 cm) in November 1901.[2] The maximum 24-hour snowfall in Roswell was 15.3 in (38.9 cm) in December 1960. The greatest snowfall during a 1-month period was 23.3 in (59.2 cm) in February 1905.[3]

2.4.1.2.2 Thunderstorms and Hail

The region has about 40 thunderstorm days annually. About 87.5% of these occur from May to September.[2] A thunderstorm day is recorded if thunder is heard; but, the thunderstorm record is not related to observations of rain or lightning and does not indicate the severity of storms in the region.

Hail usually occurs in April through June and is not likely to develop more than three times a year. During a 39-year period at Roswell, hail was observed 97 times (about 2.5 times a year), occurring nearly two thirds of the time between April and June.[4] For the 1° square (32° to 33° N by 103° to 104°W) surrounding the WIPP facility, hailstones 0.75 in (1.9 cm) and larger were reported eight times from 1955 to 1967 (slightly less than once a year).

2.4.1.2.3 Tornadoes

For the period 1916-1958, 75 tornadoes were reported in New Mexico on 58 tornado days.[5] Data for 1953 through 1976 indicate a state wide total of 205 tornadoes on 152 tornado days,[6] or an average of 9 tornadoes a year on 6 tornado days. The greatest number of tornadoes in 1 year was 18 in 1972; the least was 0 in 1953. The average tornado density in New Mexico during this period was 0.7 per 1,000 mi^2 (2,590 km^2). Most tornadoes occur in May and June.[7] From 1955 through 1967, 15 tornadoes were reported within the 1° square containing the WIPP surface facility.[8]

H.C.S. Thom has developed a procedure for estimating the probability of a tornado striking a given point.[9] The method uses a mean tornado path length and width and a site specific frequency. Applying Thom's method to the WIPP facility yields a point probability of 0.00081 on an annual basis, or a recurrence interval of 1,235 years. An analysis by Fujita yields a point tornado recurrence interval of 2,832 years in the Pecos River Valley.[10]

According to Fujita, the WIPP design basis tornado with a million year return period has a maximum wind speed of 183 mi/hr (294.6 km/hr), translational velocity of 41 mi/h (66 km/hr), a maximum rotational velocity radius of 325 ft (99.1 km), a pressure drop of 0.5 lb/in^2 (3.4 kPa), and a pressure drop rate of 0.09 lb/in^2/s (0.62 kPa/s).

2.4.1.2.4 Freezing Precipitation

The region of the WIPP facility has about 1 day of freezing rain or drizzle a year.[4] An ice accumulation of more than 0.25 in (0.63 cm) has not been observed. Any ice accumulation that does occur is thin because of the scarcity of precipitation during the winter months and because daytime temperatures rise well above freezing.

2.4.1.2.5 Strong Winds

The maximum 1-min wind speeds recorded at Roswell are shown in Table 2.4-1. The fastest 1-min wind ever recorded at Roswell was 75 mi/h (120.7 km/h) from the west in April 1953.[11] Windstorms with speeds of 50 knots (93 km/hr) or more occurred ten times (during the period between 1955 and 1967) about one a year.[7] The mean recurrence interval for annual high winds at 30 ft (9.1 m) above the ground in south eastern New Mexico is shown in Table 2.4-2.[9,12] The 100-year recurrence 30 ft (9.1 m) level wind speed in southeastern New Mexico is 82 mi/h (132 km/hr). Based on a gust factor of 1.3,[13] the highest instantaneous gust expected once in 100 years at 30 ft (9.1 m) above grade is 107 mi/h (172.2 km/h). The vertical wind profile for two 100-year recurrence intervals has been estimated from the 30 ft (9.1 m) values using the 1/7 power law[16] and is presented in Table 2.4-2.

2.4.1.2.6 Restrictive Dispersion Conditions

Hosler[14] and Holzworth[15] analyze records from several National Weather Service stations with the objectives of characterizing atmospheric dispersion potential. Seasonal and annual frequencies of inversions based at or below 500 ft (152.4 m) for the WIPP facility region are shown in Table 2.5-3. Most of these inversions are diurnal (radiation-induced) and occur because the radiation cooling at the earth's surface is increased by conditions that frequently exist at the WIPP facility. The conditions are lack of moisture, clear skies and low air density. When these conditions exist in the early morning, radiation lost from the surface is not adequately absorbed and re-radiated by upper level air to heat the air at the surface sufficiently. Consequently, the air at the surface quickly becomes cooler than the upper level air and the colder surface air becomes trapped.

Holzworth gives estimates of the average depth of vertical mixing, which indicates the thickness of the atmospheric layer available for the mixing and dispersion of effluents.[15] The seasonal afternoon mixing heights for the region (Table 2.4-4) range from 1,320 m (4,329.6 ft) in winter to 3,050 m (10,004 ft) in summer. Seasonal morning mixing heights in the region range from 300 m (984 ft) in winter to 680 m (2,230.4 ft) in summer.

2.4.1.2.7 Sandstorms

Blowing dust or sand may occur occasionally in the region due to the combination of strong winds, sparse vegetation and the semiarid climate. High winds associated with thunderstorms are frequently a source of localized blowing dust. Dust storms covering an extensive area are rare, and those that reduce visibility to less than 1 mi (1.6 km) occur only with the strongest pressure gradients such as those associated with intense extratropical cyclones which occasionally form in the region during winter and early spring. Winds of 50 to 60 mi/h (80.5 to 96.6 km/h) and higher may persist for several days if these pressure systems become stationary.[3] Ten windstorms of 58 mi/h (93.4 km/h) and greater were reported during 1955-1967 within the 1° square in which the WIPP facility is located.[7] Blowing dust or sand may reduce visibility to less than 5 mi (8.0 km) over an area of thousands of square miles. However, restrictions of less than 1 mi (1.6 km) are quite localized and depend on soil type, conditions, cultivation practices and vegetation in the immediate area.[3]

2.4.1.2.8 Snow

The 100-year recurrence maximum snowpack for the WIPP facility region is 10 lb/ft^2 (0.5 kPa).[12] The probable maximum winter precipitation (PMWP) in the WIPP facility region is taken to be the probable maximum 48-hour precipitation during the winter months of December through February. The PMWP for the WIPP facility is estimated to be 12.8 in (32.5 cm) of rain (i.e., 66 lb/ft^2 or 3.2 kPa).[16,17] The snowload for the WIPP facility is calculated (ground level equivalent) to be 27 lb/ft^2 (1.3 kPa). Specific roof loads are estimated based on ANSI's methodology.[12]

2.4.2 Local Meteorology

2.4.2.1 Data Sources

On site meteorological data (hourly) are used to characterize the local meteorology of the WIPP facility.

2.4.2.2 Temperature Summary

Temperatures are moderate throughout the year, although seasonal changes are distinct. The mean annual temperature in southeastern New Mexico is 63°F (17.2°C). In the winter (December through February), night-time lows average near 23°F (-5°C), and average maxima are in the 50s. The lowest recorded temperature at the nearest Class-A weather station in Roswell was -29°F (-33.8°C) in February 1905. In the summer (June through August), the day-time temperature exceeds 90°F (32.2°C) approximately 75 percent of the time.[1] The National Weather Service documented a measurement of 122°F (50°C) at the WIPP site as the record high temperature for New Mexico. This measurement occurred on June 27, 1994. Table 2.4-5 shows the annual average, maximum, and minimum temperatures from 1990 through 1999.

2.4.2.3 Precipitation Summary

Precipitation is light and unevenly distributed throughout the year, averaging 13 in (33 cm) for the past five years. Winter is the season of least precipitation, averaging less than 0.6 in (1.5 cm) of rainfall per month. Snow averages about 5 in (13 cm) per year at the site and seldom remains on the ground for more than a day at a time because of the typically above-freezing temperatures in the afternoon. Approximately half the annual precipitation comes from frequent thunderstorms in June through September. Rains are usually brief but occasionally intense when moisture from the Gulf of Mexico spreads over the region.[1] Monthly average, maximum, and minimum precipitations recorded at the WIPP

site from 1990 through 1994 are summarized in Figure 2.4-1.

2.4.2.4 Wind Speed and Wind Direction Summary

The frequencies of wind speeds and directions for the WIPP site are depicted by windroses in Figures 2.4-2 through 2.4-10. In general, the predominant wind direction at the WIPP site is from the southeast.

2.4.2.5 Topography

The land surface in the vicinity of the WIPP facility is a semiarid, wind blown plain sloping gently to the west and southwest. Its surface is made somewhat hummocky by an abundance of sand ridges and dunes. The average slope within a 3 mi (4.8 km) radius is about 50 ft/mi (9.5 m/km) from the east to west.

A plot of terrain profiles from the center of the WIPP facility out to 5 mi (8.1 km) is presented in Figure 2.4-12 for each of the 16 direction sectors.

References for Section 2.4

1. DOE/EIS-0026, Final Environmental Impact Statement, Waste Isolation Pilot Plant, U.S. Department of Energy, Washington, DC, 1980.

2. Weather Bureau Technical Paper No. 2, Maximum Recorded U.S. Point Rainfall, (Rev.) U.S. Department of Commerce, 1963.

3. Climates of the States, Vol. 2 - Western States, Roswell, New Mexico, U.S. National Oceanic and Atmospheric Administration (NOAA), Water Information Center, Inc., Port Washington, NY, 1974.

4. Technical Report EP-83, Hail Size and Distribution, U.S. Army, Quartermaster Research and Engineering Center, 1958.

5. Technical Paper No. 20, Tornado Occurrences in the United States, U.S. Department of Commerce, 1960.

6. Climatological Data National Summary, National Oceanic and Atmospheric Administration (NOAA), 1976.

7. Technical Memorandum WBTM FCST 12, Severe Local Storm Occurrence, 1955-1957, Environmental Sciences and Services Administration (ESSA), U.S. Department of Commerce, Silver Spring, 1969.

8. WASH 1300, Technical Basis for Interim Regional Tornado Criteria, U.S. Atomic Energy Commission, Washington, DC.

9. Monthly Weather Review, Tornado Probabilities, November-December 1963.

10. SMRP Research Paper No. 155, A Site-Specific Study of Wind and Tornado Probabilities at the WIPP Site in Southeast-New Mexico, Research Project, Department of Geophysical Sciences, University of Chicago, 1978.

11. Environmental Data Service, June 1968, Weather Atlas of the United States, (originally titled Climatic Atlas of the United States), reprinted in 1975 by Gale Research Co.

12. ANSI A58.1-1972, Building Code Requirements for Minimum Design Loads in Buildings and Other Structures, Revision of A58.1-1955, American National Standards Institute, Inc., July 1972.

13. DGAF 140, Relations Between Gusts and Average Wind Speeds for Housing Load Determination, Daniel Guggenheim, Airship Institute, Cleveland, Ohio, 1946.

14. Monthly Weather Review, 89 (9), Low-Level Inversion Frequency in the Contiguous United States, 1961.

15. U.S. Environmental Protection Agency (EPA), Mixing Heights, Wind Speeds and Potential for Urban Air Pollution Throughout the Contiguous United States, Research Triangle Park, North Carolina, 1972.

16. Hydrometeorological Report No. 33, Seasonal Variations of the Probable Maximum Precipitation East of the 105th Meridian for Areas from 10 to 1,000 Square Miles and Durations of 6, 12, 24 and 48 Hours, Weather Bureau, 1956.

17. Housing and House Finance Agency, Snow Load Studies, Office of the Administrative Division of Housing Research, 1956.

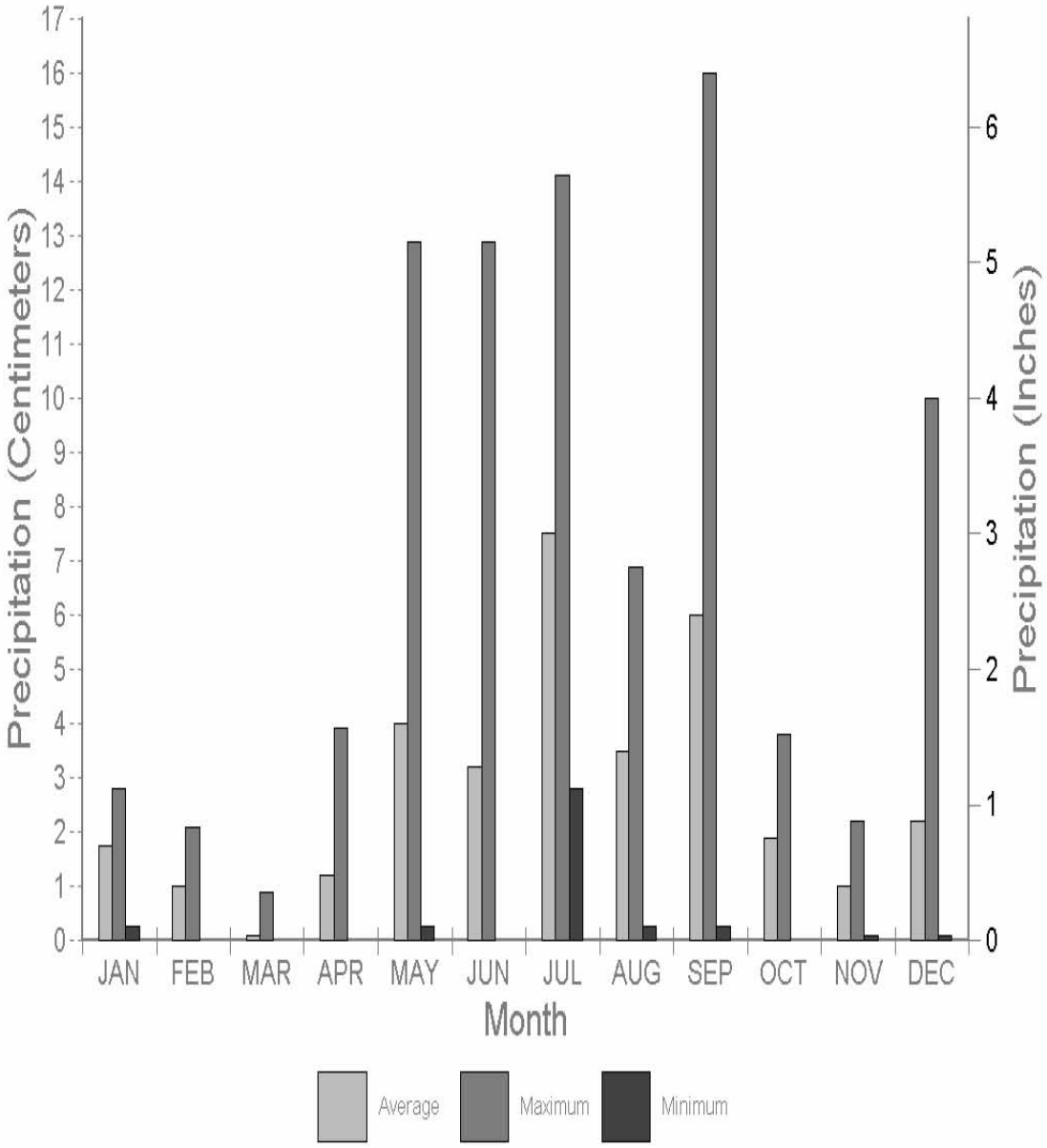

Figure 2.4-1 Monthly Precipitation for the WIPP Site from 1990 through 1994

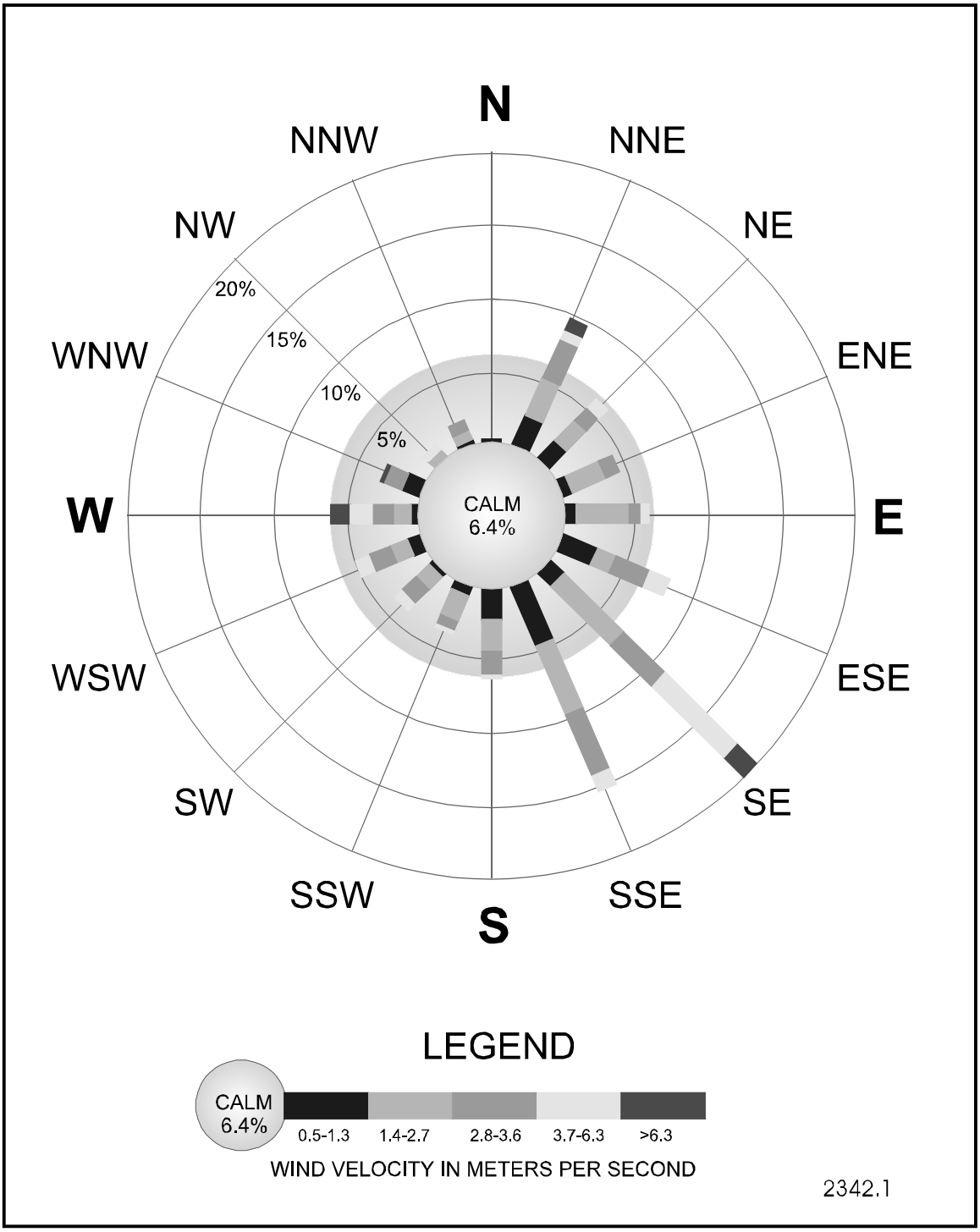

Figure 2.4-2 1991 Annual Windrose - WIPP Site

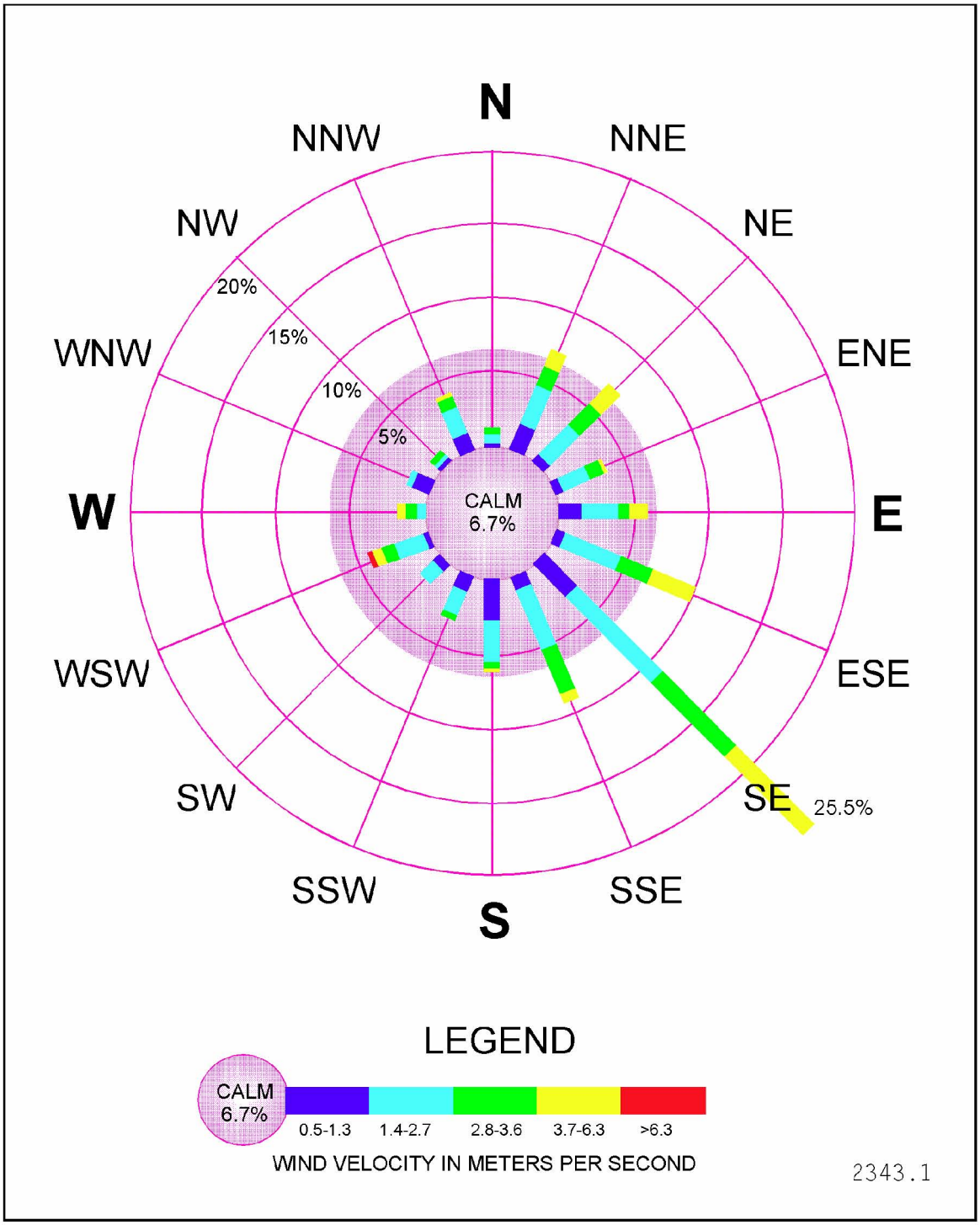

Figure 2.4-3 1992 Annual Windrose - WIPP Site

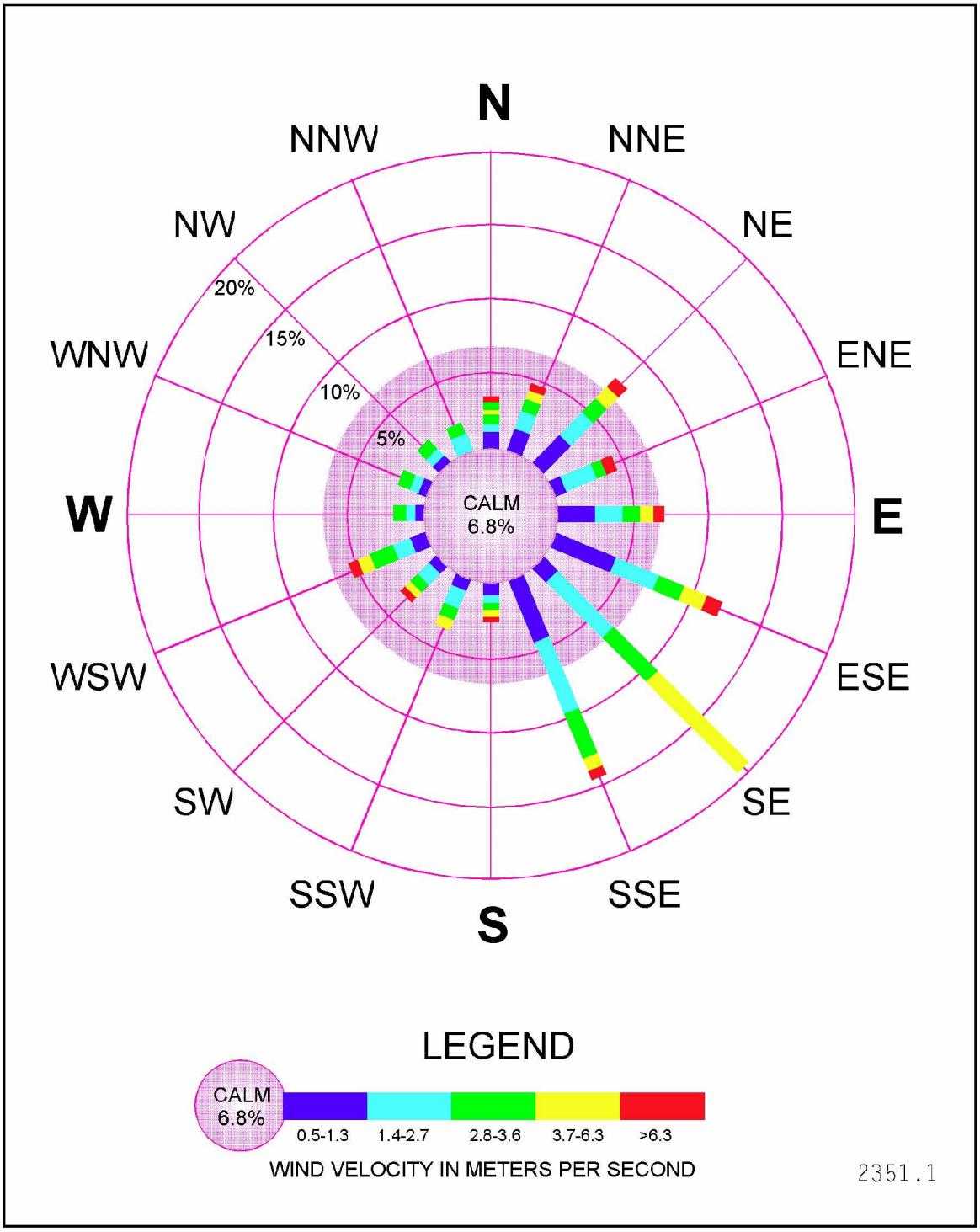

Figure 2.4-4 1993 Annual Windrose - WIPP Site

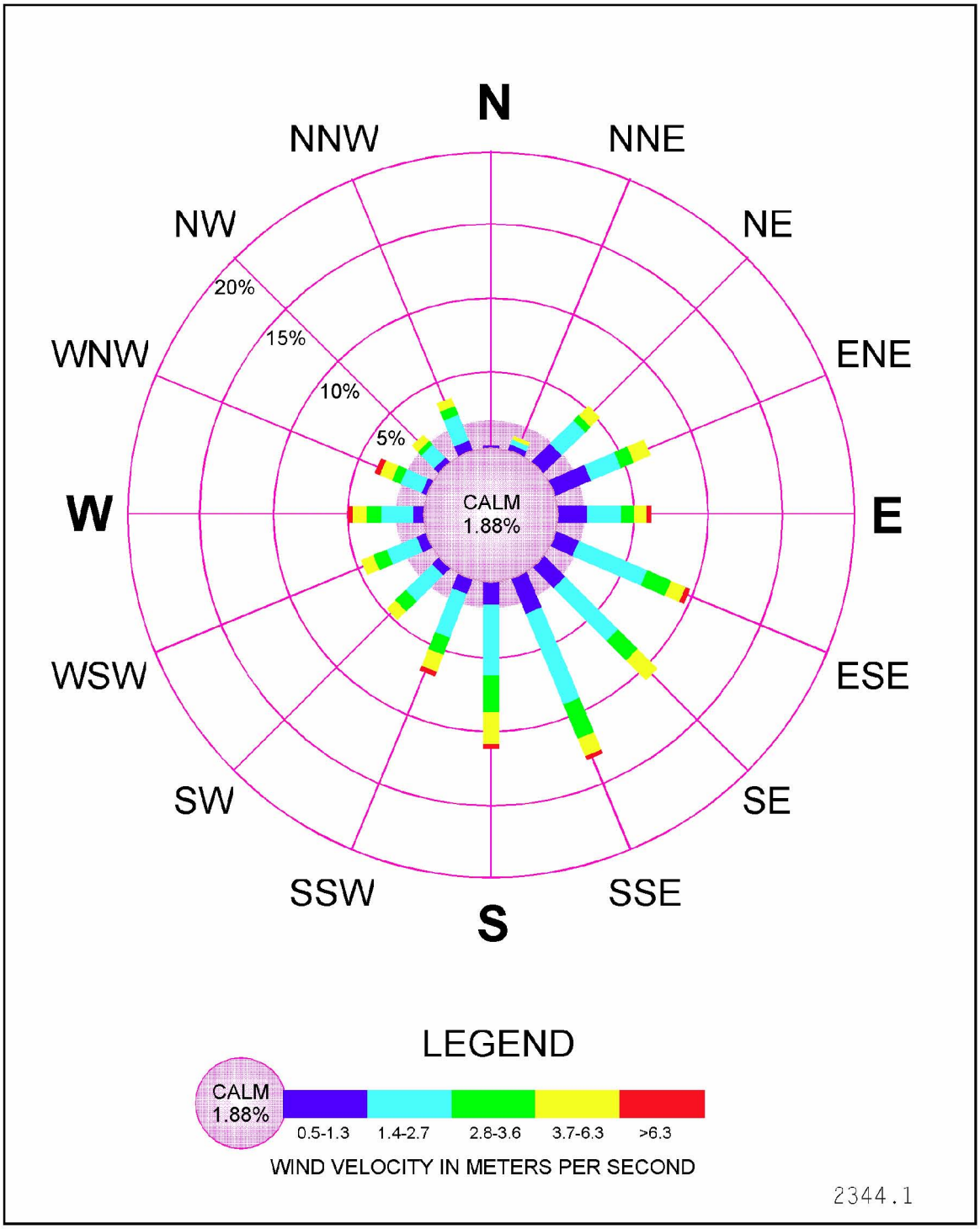

Figure 2.4-5 1994 Annual Windrose - WIPP Site

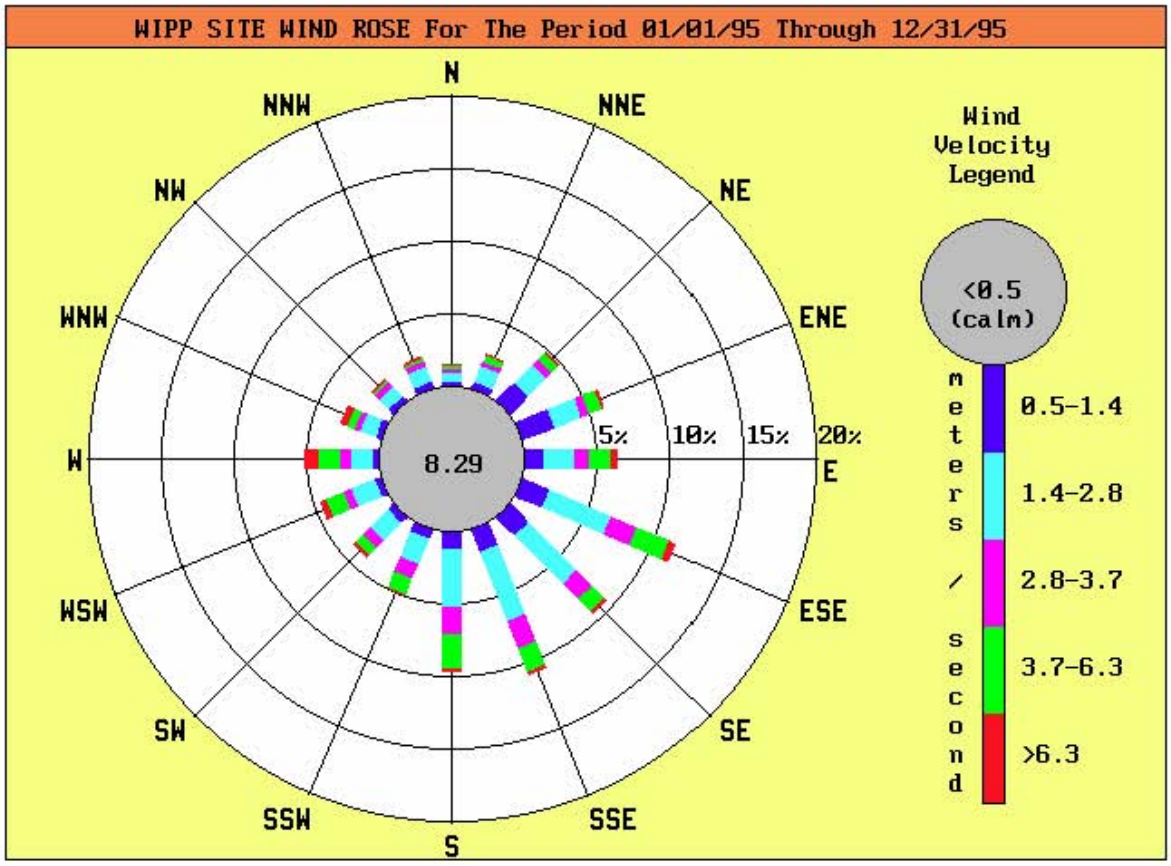

Figure 2.4-6 1995 Annual Windrose - WIPP Site

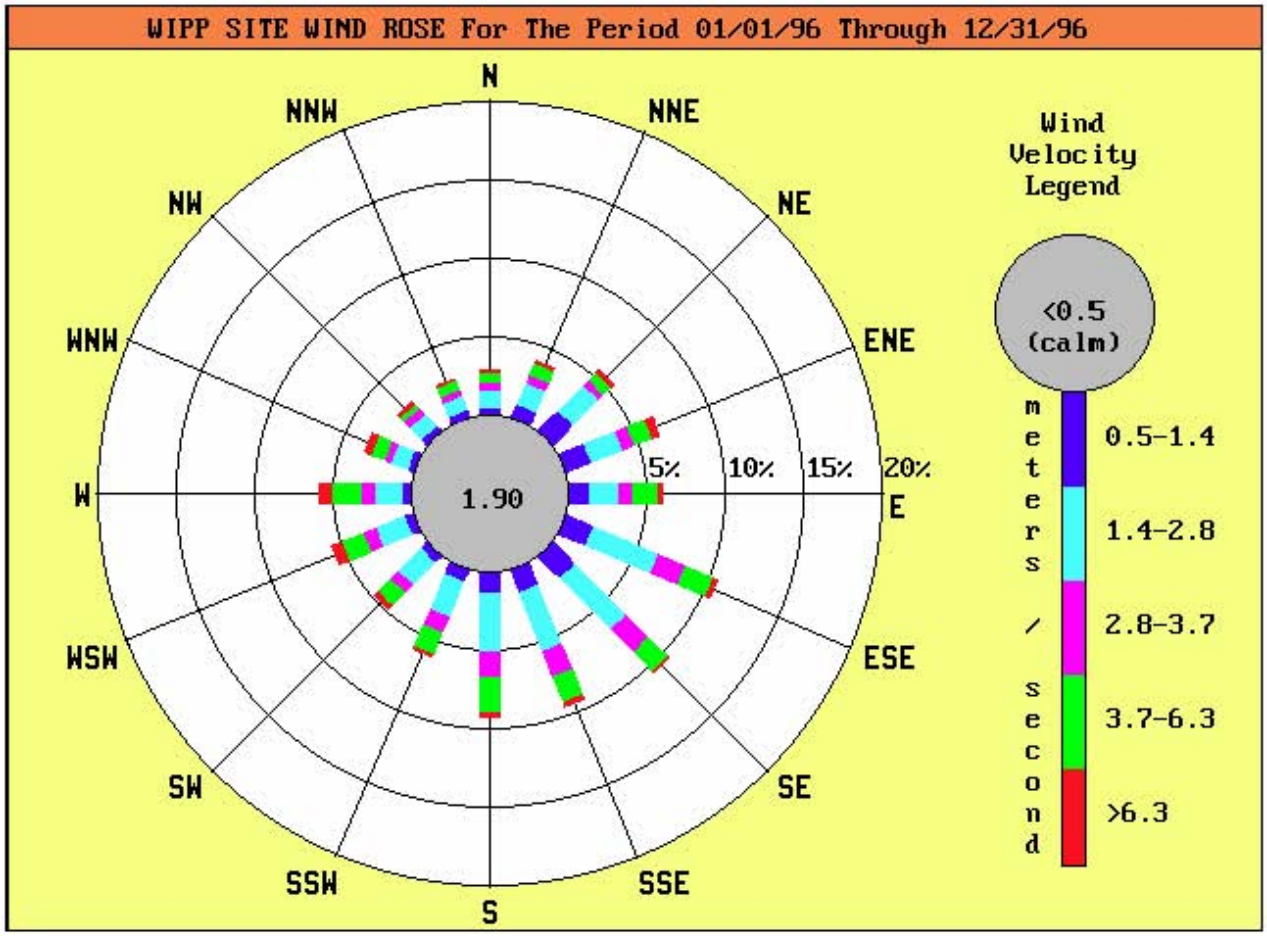

Figure 2.4-7 1996 Annual Windrose - WIPP Site

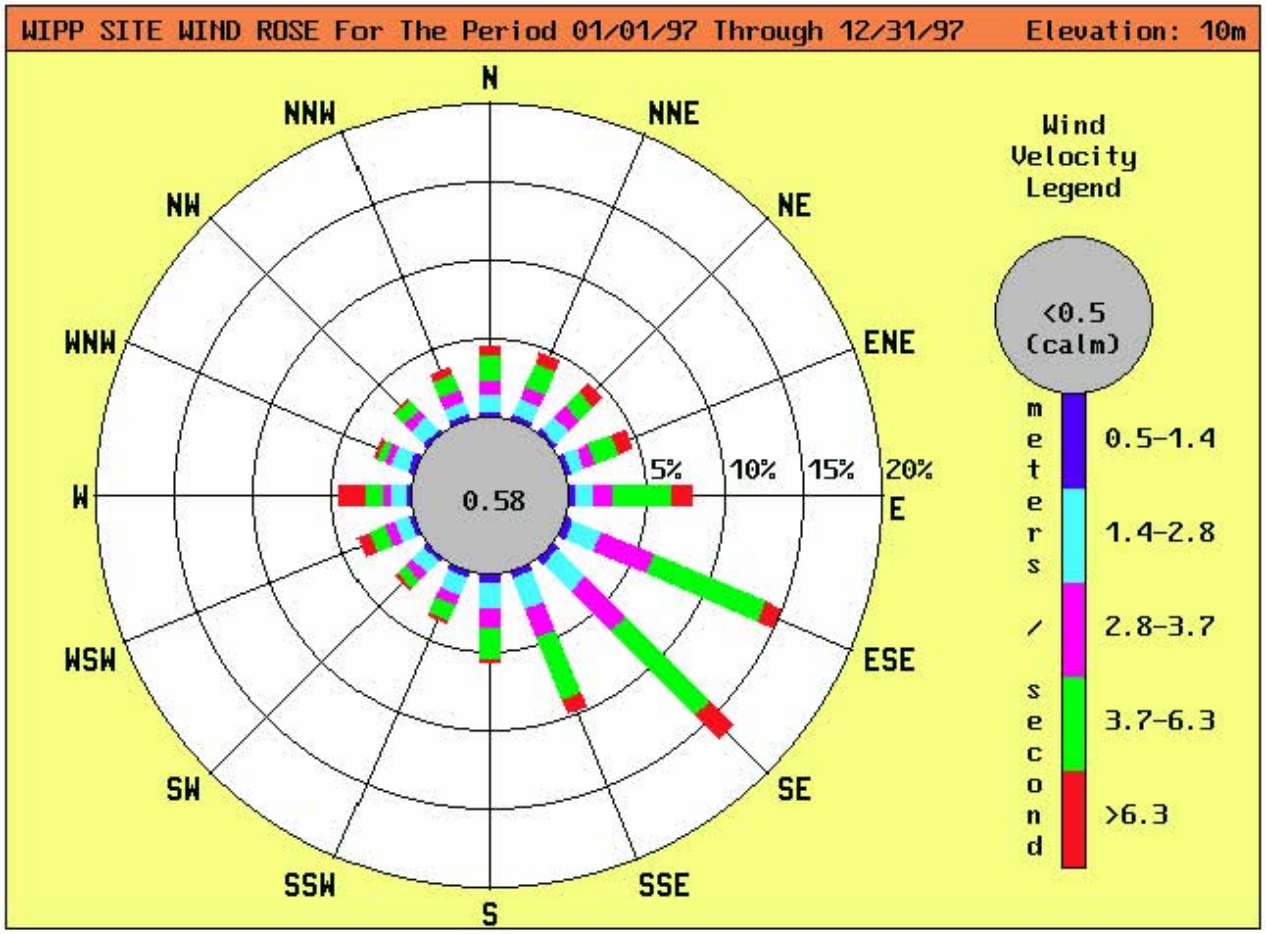

Figure 2.4-8 1997 Annual Windrose - WIPP Site

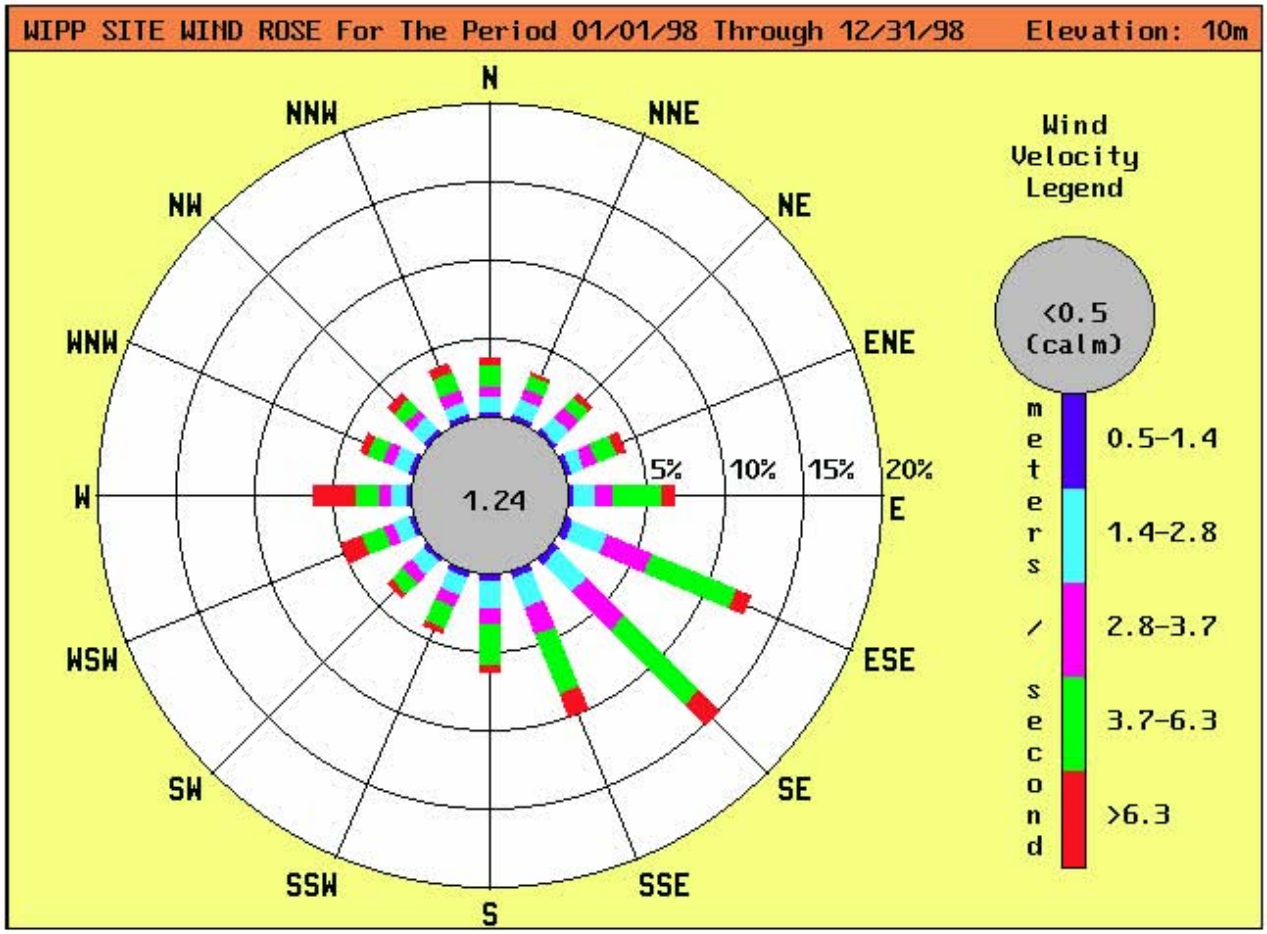

Figure 2.4-9 1998 Annual Windrose - WIPP Site

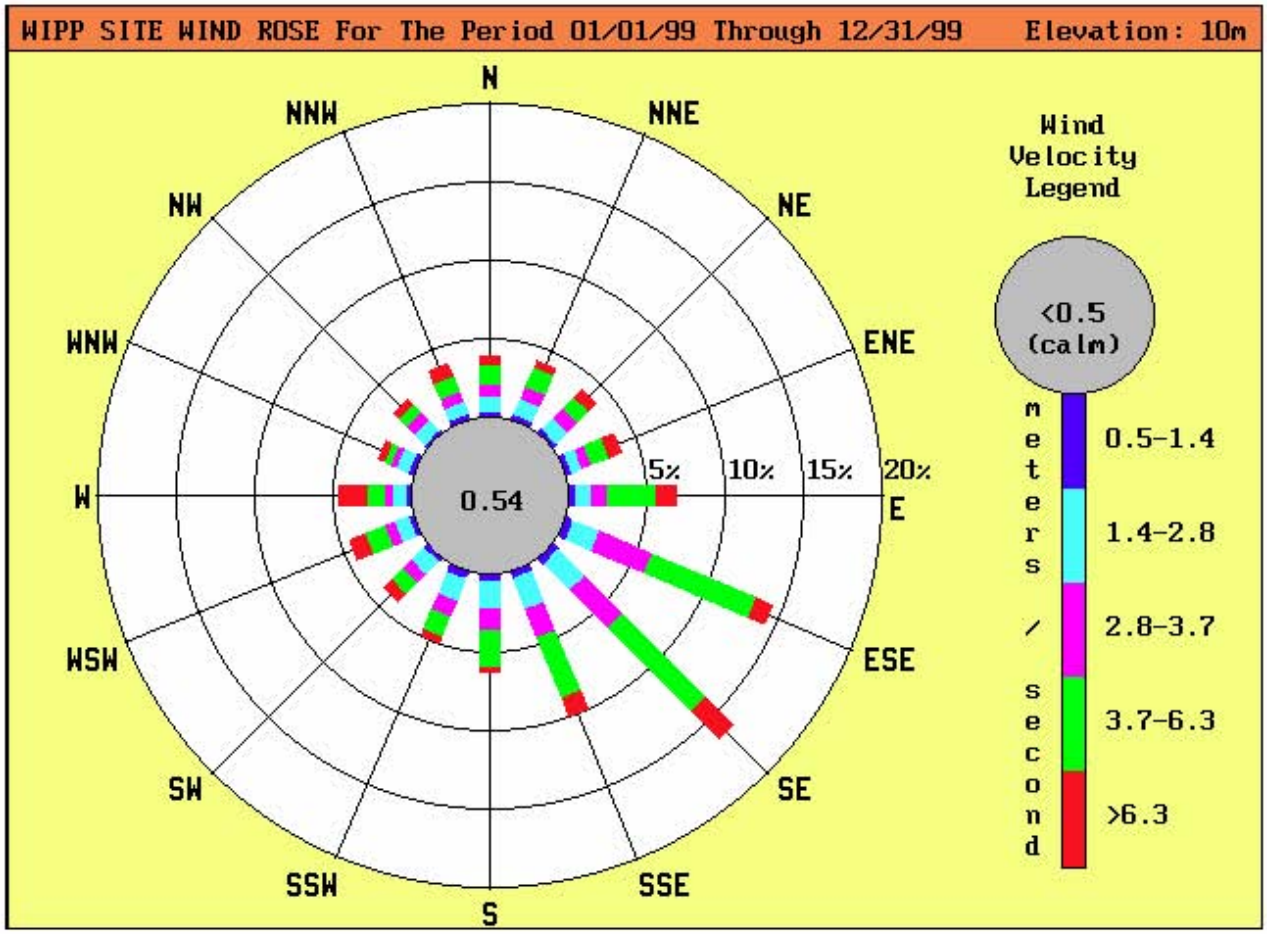

Figure 2.4-10 1999 Annual Windrose - WIPP Site

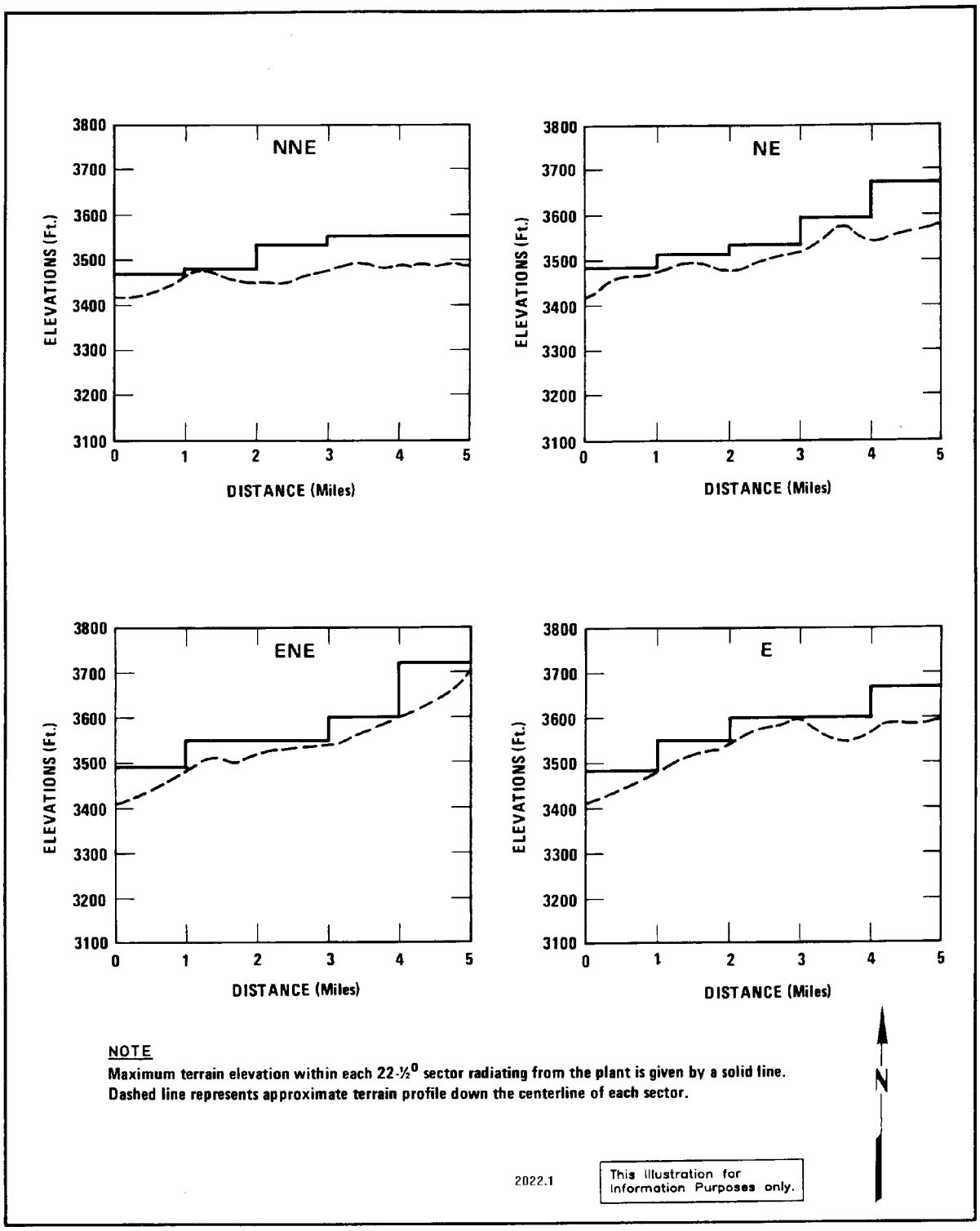

Figure 2.4-11A Terrain Elevations Out to 5 Miles from Center of the WIPP Facility Sheet 1 of 4

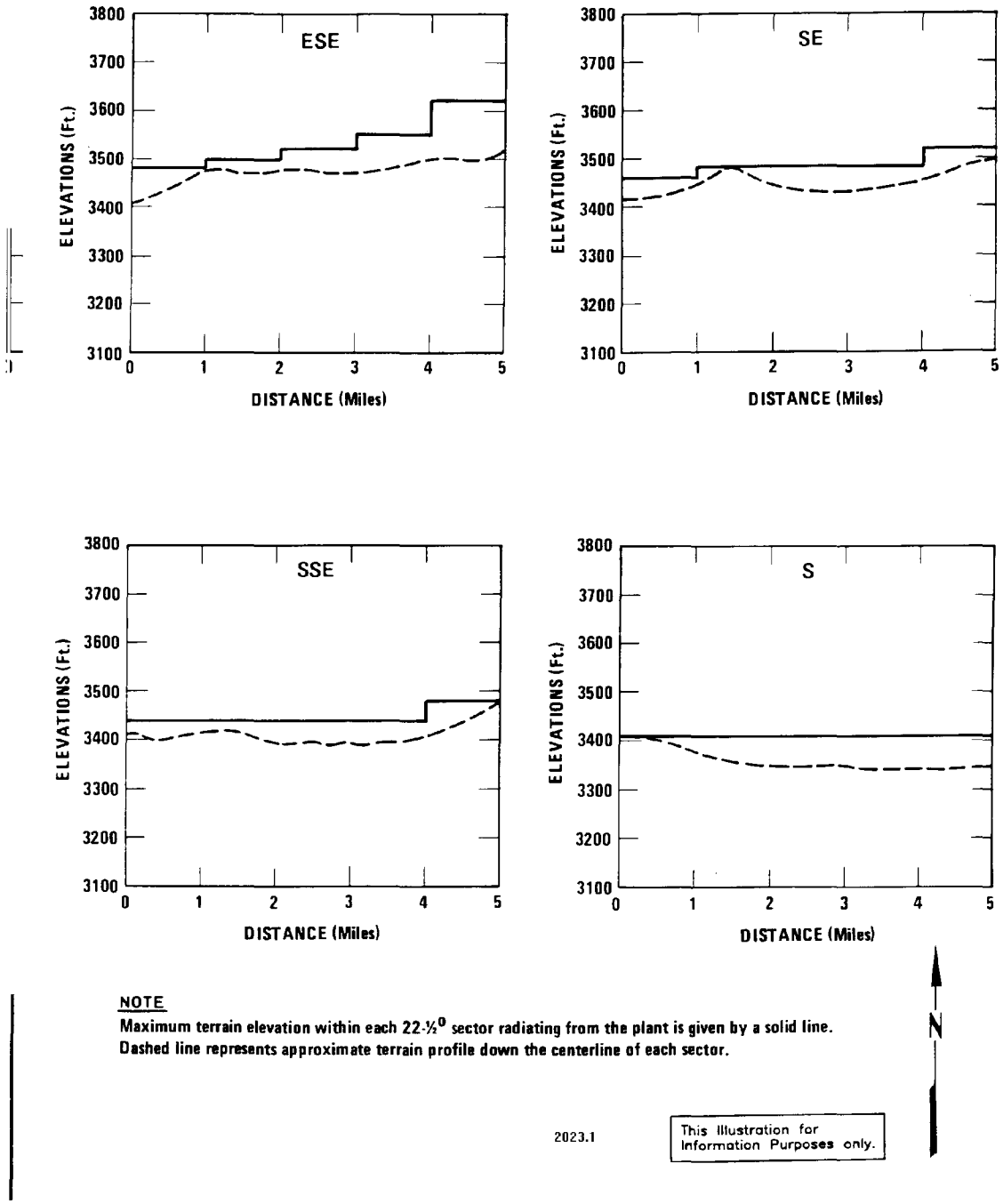

Figure 2.4-11B Terrain Elevations Out to 5 Miles from Center of the WIPP Facility Sheet 2 of 4

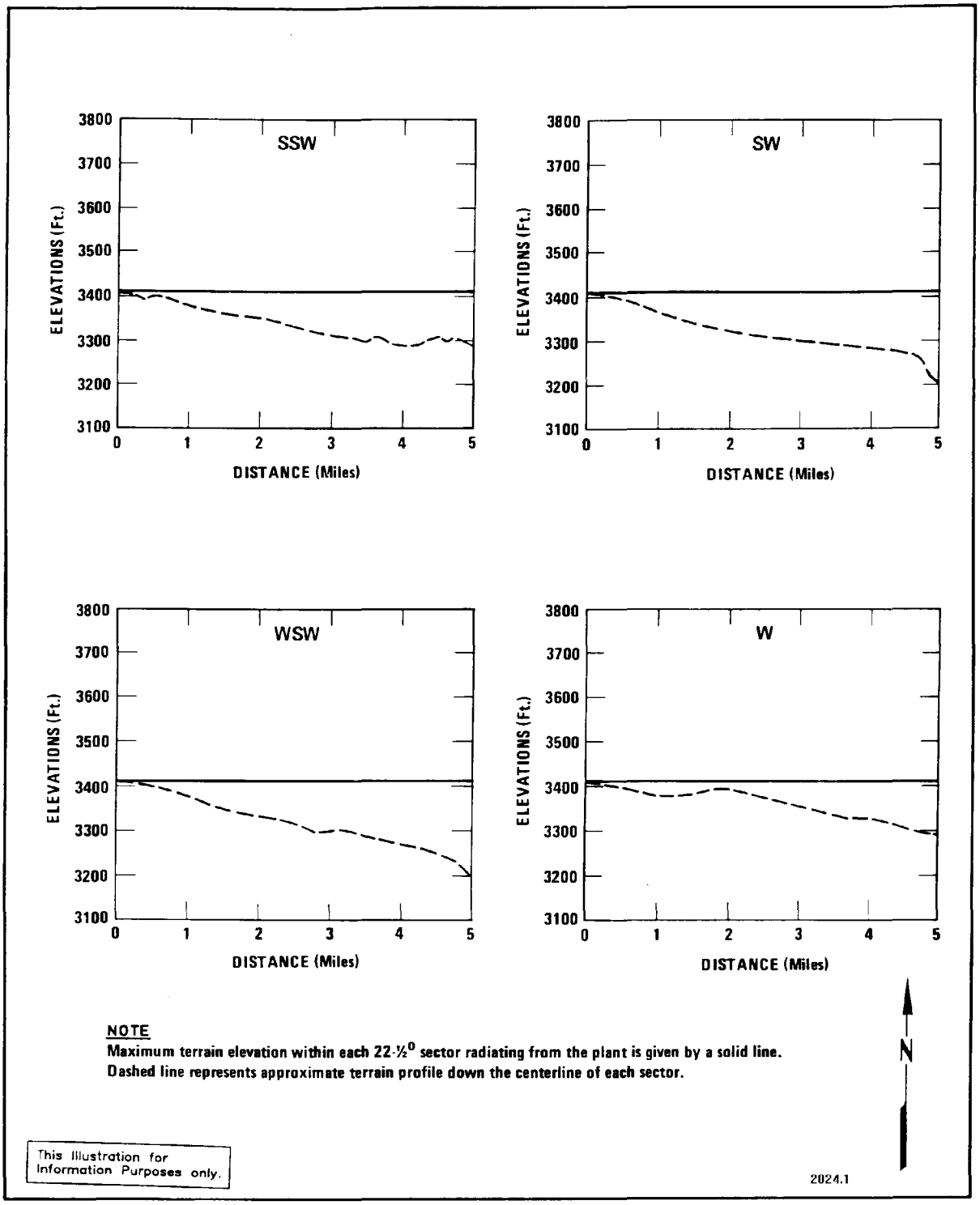

Figure 2.4-11C Terrain Elevations Out to 5 Miles from Center of the WIPP Facility Sheet 3 of 4

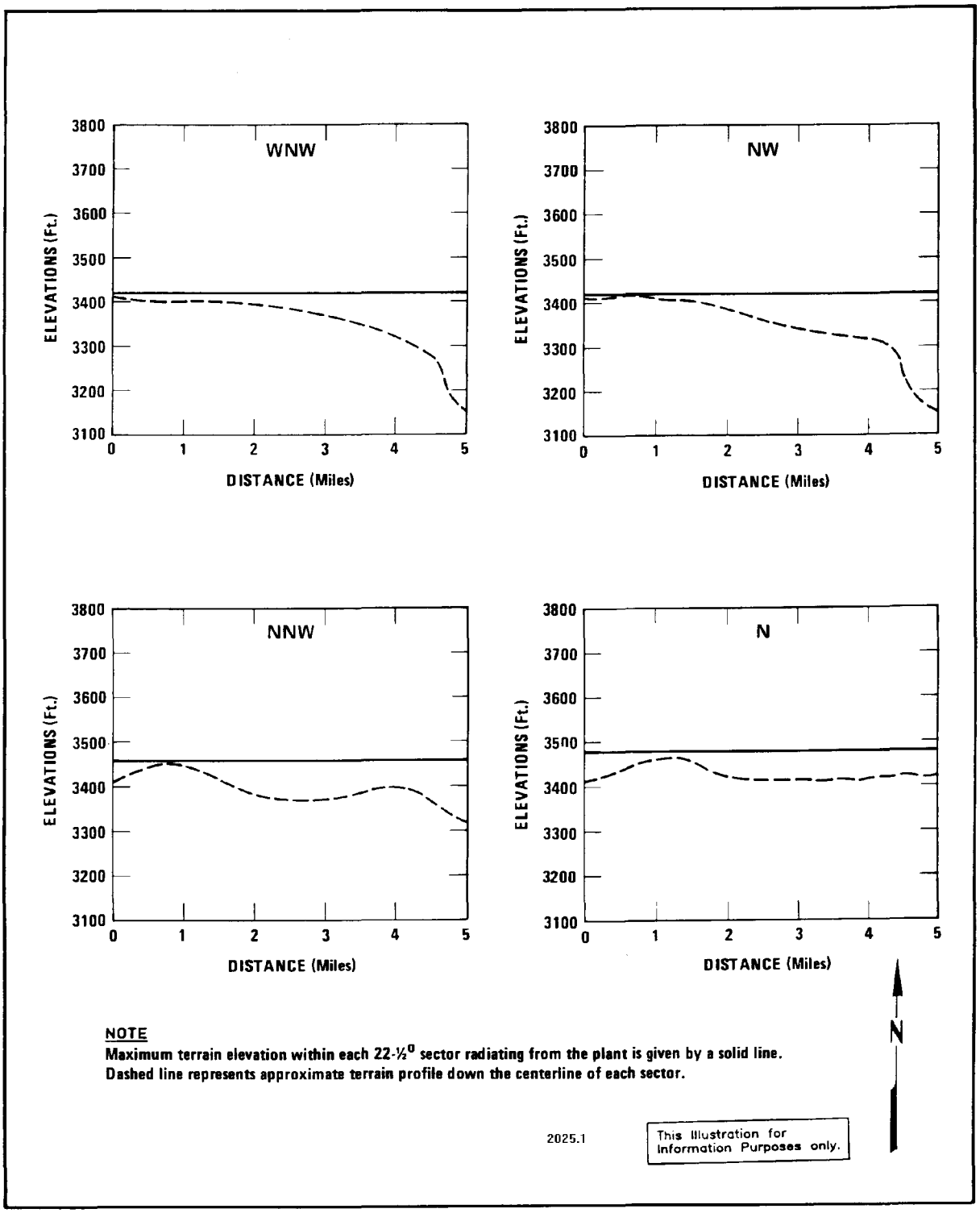

Figure 2.4-11D Terrain Elevations Out to 5 Miles from Center of the WIPP Facility Sheet 4 of 4

Table 2.4-1 Maximum Wind Speeds for Roswell, New Mexico*

Month	Max wind speed, mph	Month	Max wind speed, mph
January	67	July	66
February	70	August	72
March	66	September	54
April	75	October	66
May	72	November	65**
June	73	December	72

*Climates of the States, Vol. 2 - Western States, Roswell, NM, U.S. National Oceanic and Atmospheric Administration (NOAA), Water Information Center, Inc., Asheville, NC, 1974, p. 804.Local Climatological Data, Annual Summary 1985, Roswell, NM, NOAA-ED.

**Occurred more than once.

Table 2.4-2 Recurrence Intervals for High Winds in Southeastern New Mexico*

	Speed, mph			
Recurrence, years	30’	50’	100’	150’
2	58	62	65	73
10	68	73	81	86
25	72	77	86	91
50	80	86	95	101
100	82	88	97	103

*O. G. Sutton, Micrometeorology (McGraw-Hill Book Co., Inc., New or, 1953), p. 238.

Table 2.4-3 Seasonal Frequencies of Inversions*

Season	Inversion frequency (% of total hours)	Maximum %**
Spring	32	65
Summer	25	68
Fall	35	72
Winter	46	78
Annual	35	70

*C. R. Hosler, "Low-Level Inversion Frequency in the Contiguous United States," Monthly Weather Review, 89 (9) (1961).

**Frequency of 24-hour periods with at least 1 hour of inversion based at or below 500 feet.

Table 2.4-4 Seasonal Values of Mean Mixing Heights*

Season	Mean afternoon mixing height, m	Mean morning mixing height, m
Spring	2800	480
Summer	3050	680
Fall	2000	440
Winter	1320	300
Annual	2400	479

*G. C. Holzworth, Mixing Heights, Wind Speeds and Potential for Urban Air Pollution Throughout the Contiguous United States, U.S. Environmental Protection Agency (EPA), Research Triangle Park, NC (1972).

Table 2.4-5 Annual Average, Maximum, and Minimum Temperatures*

Year	Annual Average Temperature (oC)	Annual Average Temperature (oF)	Maximum Temperature (oC)	Maximum Temperature (oF)	Minimum Temperature (oC)	Minimum Temperature (oF)
1990	17.8	64.0	46.1	115.0	-13.9	7.0
1991	17.2	63.0	42.8	109.0	-7.8	18.0
1992	17.2	63.0	42.8	109.0	-10.0	14.0
1993	17.8	64.0	42.8	109.0	-18.9	-2.0
1994	17.8	64.0	50.0	122.0	-14.4	6.0
1995	17.2	63.0	42.2	108.0	-8.3	17.0
1996	17.2	63.0	41.1	106.0	-13.9	7.0
1997	16.1	61.0	38.9	102.0	-13.9	7.0
1998	18.9	66.0	42.8	109.0	-11.1	12.0
1999	17.8	64.0	41.7	107.0	-10.0	14.0
Average	17.5	63.5	43.1	109.6	-12.2	10.0

Source: WIPP Annual Site Environmental Report for Calendar Years 1990 through 1999 (Draft)

This page intentionally blank

2.5 Vibratory Ground Motion

This section is directed towards establishing the seismic design basis for vibratory ground motion directly applicable to Design Class I and II confinement structures and components at the WIPP facility. The application of the results contained in this section to seismic design of plant facilities is discussed in Section 3.2.7. This presentation is aimed at conservatively estimating the Design Basis Earthquake (DBE) for the WIPP site facility.

The approach used in this analysis is to develop a probabilistic peak acceleration to be used in design. This peak acceleration is derived from a correlation between historical earthquake activity and various active geologic structures and tectonic provinces. These results are used to establish the site's DBE in Section 2.5.5.

2.5.1 Seismicity

In this section, data are presented for earthquakes within 180 mi (290 km) of the WIPP facility. This area is defined as the WIPP facility region for this discussion. The information for the WIPP facility region earthquakes before 1962 is based on chronicles of the effects of those tremors on people, structures and land forms (called macroseismic evidence). Virtually all information on earthquakes occurring after the beginning of 1962 in the WIPP facility region is derived from instrumental data recorded at various seismograph stations.

2.5.1.1 Pre-1962 Earthquake Data

Most earthquakes reported in New Mexico before 1962 occurred in the Rio Grande Valley area between Albuquerque and Socorro, a distance of more than 186 mi (300 km) from the WIPP site. About half of the earthquakes of Modified Mercalli Intensity (MMI) V or greater in New Mexico between 1868 and 1973 were in this region. In conformity with previous studies,[1,2,3] those events are not of immediate concern to this study. There has been one earthquake associated with moderate to considerable damage (intensity VIII) prior to 1962 within the WIPP facility region. The Valentine, Texas earthquake of 1931, occurred about 120 mi (193 km) south-southwest of the location of the WIPP facility. The area within 120 mi (193 km) of the WIPP facility has experienced only low-intensity earthquakes (intensity V or less).

Figure 2.5-1 shows locations of earthquakes occurring before 1962 within 186 mi (300 km) of the WIPP site. These epicenters were assigned on the basis of macroseismic evidence and are also listed in Table 2.5-1. Supplemental descriptive material for most of those events is provided primarily by Sanford and Toppozada[1] and other sources.[4,7] All intensities listed in Table 2.5-1 are Modified Mercalli Intensities.[7] An abridged version of this scale is presented in Table 2.5-2.

The Valentine, Texas earthquake of August 16, 1931 was large enough to generate significant interest so that much more data are available for that event. A number of isoseismal maps were compiled soon after its occurrence.[5,7] Recently, Sanford and Toppozada assigned MMI on the basis of descriptions of the effects of this event and plotted the resulting isoseismal map reproduced in Figure 2.5-2. Several features of this plot are noteworthy. First, according to Figure 2.5-2, the intensity location of the WIPP facility from this earthquake was V. Second, isoseismal lines close to the zone of the highest intensity are elongated northwest-southeast conforming to the structural integrity of the region.

Two instrumental locations have been published for the Valentine, Texas earthquake. The United States Coast and Geodetic Survey (USCGS) places the epicenter at 29.9N and 104.2W with an origin time of 11:40:15 Greenwich Mean Time (GMT).[5] Byerly[9] made a detailed instrumental investigation of that earthquake and found the epicenter to be 30.9N and 104.2W with an origin time of 11:40:21 GMT. Byerly's[9] epicenter, 66 mi (106 km) north of the USCGS epicenter, is somewhat closer to the region of highest reported intensity and may for this reason be considered the more accurate of the two.[1] These two instrumental epicenters are plotted in Figure 2.5-2. Although neither of these instrumental locations is particularly close to Valentine, Texas, the USCGS and Byerly epicenters bracket the area of maximum reported intensity fairly well. For the purposes of Figure 2.5-1, Valentine, Texas has been adopted for the location of both the main earthquake and its aftershocks in agreement with Sanford and Toppozada.[1]

The area over which an earthquake is perceptible can be used to estimate its magnitude.[10,11] If a felt area of 4.5×10^5 mi^2 (1.2×10^6 km^2) is accepted as reported by the USCGS,[6] and a magnitude felt area formula for the central United States and Rocky Mountain region is used,[11] a magnitude of about 6.4 is calculated for the Valentine, Texas earthquake. This result is compatible with the maximum intensity reported for the shock[1] and is the same as the magnitude for this event calculated at Pasadena, California.[12]

2.5.1.2 Comprehensive Listing of Earthquakes From All Studies - January 1, 1962 through September 30, 1986

Presented in Table 2.5-3 is a listing of earthquake origin times, locations, and magnitudes, based on instrumental data gathered and analyzed by a number of different organizations. The listing is for earthquakes within the WIPP facility region for the 24 3/4 year interval from January 1, 1962 through September 30, 1986. The organization providing the earthquake parameters listed in the table is identified by an X in the appropriate column. Organizations providing data for the table were as follows:

- New Mexico Institute of Mining and Technology (NMT)
- U.S. Geological Survey (USGS)
- Los Alamos National Laboratory (LANL)
- Albuquerque Seismological Laboratory (ASL)
- University of Texas at Austin (UTA)
- University of Texas at El Paso (UTEP).

2.5.1.2.1 Magnitudes

Recent seismic events occurred at WIPP on January 2, 1992 and April 13, 1995. These events had magnitudes of 5.0 and 5.4 respectively. The January 2, 1992 Rattlesnake Canyon Earthquake had an epicenter located 37 mi (60 km) east southeast of the WIPP site. The Rattlesnake Canyon Earthquake and the April 13, 1995 earthquake had no effect on any of the structures at WIPP, as documented by post event inspections by the WIPP staff and the New Mexico Environment Department. These events were within the parameters used to develop the seismic risk assessment of the WIPP structures (Section 2.5.5). The Rattlesnake Canyon event likely was tectonic in origin based on a 7 +/- mile (12+/- km) depth. (Ref Part B Permit Application, Rev. 5, Appendix D6, Section D6-4 Seismicity).

Up to August 1981, NMT calculated magnitudes differently than other organizations. As a result, systematic differences in calculated magnitudes were observed. In Table 2.5-3, all magnitudes calculated by organizations other than NMT were modified by applying corrections. In all cases, these modifications reduced the reported magnitude by amounts ranging from 0.3 to 0.5.

After August 1981, NMT started using a magnitude scale based on the duration (t_D) of the recorded signal from onset of the P phase to when the trace amplitude approaches background noise. The equation used,

$$M_D = 2.79 \log t_D - 3.63$$

was derived by LANL researchers[21] and determined to be equivalent to the Richter local magnitude scale for earthquakes in northern New Mexico. Ake and Sanford[18] established that the LANL formula can be applied to earthquakes in central New Mexico which fall in the local magnitude range of 1.1 to 4.2. A careful study of the applicability of the formula to earthquakes in southeastern New Mexico and west Texas has not been made.

However, random comparisons between magnitudes calculated from the amplitude of S_g (Shear Wave) and duration of ground motion in the time period 1962 to 1974 indicate general consensus good agreement (within 0.3 magnitude units) between the two methods.

Most recurrence formulas in Section 2.5.4.2 are based on the earthquake data set included in Table 2.5-3, but at lower magnitudes. Therefore, the latest listing of events within the WIPP facility region does not require an upward revision in earthquake risk or the DBE.

2.5.1.2.2 Completeness of the Earthquake Data Set

From January 1, 1962 to April 5, 1974, events in the WIPP facility region were located by readings from stations generally several hundred miles from the epicenter. On April 5, 1974, a single station (CLN) was established near the center location of the WIPP facility which continued operation to September 1980. These stations are plotted in Figure 2.5-3. From November 1975 to late 1979, a seismograph array was in operation near Kermit, Texas. These are shown in Figure 2.5-4.

A small network of stations centered in the Davis Mountains of West Texas was operated by the UTA from July 1977 to July 1978. No stations were running near the location of the WIPP facility from shutdown of station CLN in September 1980 to startup of a three station network in August 1982. The WIPP seismograph network was not fully operational until March 1983.

The histograms in Figure 2.5-5 illustrate how the shifts in instrumentation affected the completeness of the earthquake data set presented in Table 2.5-3. The period from January 1, 1962 through September 30, 1986 was divided into eight time intervals of 1130 days, and the number of events greater than 3.0, 2.5, 2.0, and 1.5 were determined for each interval. The first four intervals (from January 1, 1962 through May 17, 1974) cover the period prior to installation of any stations at, or near the location of the WIPP facility. The fifth and sixth intervals (from May 18, 1974 through July 24, 1980) cover the period when station CLN, the Kermit array, and the UTA networks were in operation. Most of the seventh interval (from July 25, 1980 to August 28, 1983) covers the period between shutdown of station CLN and startup of the WIPP seismographic network. During the last interval (from August 29, 1983 through September 30, 1986) the WIPP array was fully operational.

The histogram in Figure 2.5-5 for events with M3.0 (upper left) suggests a complete data set of this magnitude level. The greatest number of events (6) occurred during the second interval (from February 4, 1965 through March 9, 1968), a period when no seismograph was operating within 135 mi (217 km) of the location of the WIPP facility except station FOTX during the first 67 days of the interval. (Station FOTX was located 72 mi (116 km) southeast of the WIPP facility). The least number of earthquakes occurred in the first, third, and eighth intervals. The WIPP seismographic network was fully operational during the eighth interval, but no seismic instrumentation within 135 mi (217 km) of the location of the WIPP facility existed during the first and third intervals except station FOTX (in operation the last 228 days of the first interval). Because the number of observed quakes with M3.0 does not correlate with the presence or absence of instrumentation at or near the WIPP facility, the data set is believed to be complete at that strength level. If the data set is complete, then the variations in activity observed in the histogram represent true temporal changes in the activity rate for earthquakes with M3.0.

In the lower two histograms of Figure 2.5-5, the period of maximum instrumentation is even more clearly defined by the increase in numbers of earthquakes during the fifth and sixth time intervals. In summary, the general shape of the histograms relative to temporal changes in instrumentation indicates the data set is probably complete above magnitude 2.7, and that it becomes progressively less complete at lower magnitudes.

2.5.1.2.3 Recurrence Interval Formulas

Many studies have demonstrated a linear relation between the logarithm of the cumulative number of earthquakes (N) and the magnitude (M), i.e.,

$$\log N = a - bM.$$

The values of the constants "a" and "b" are derived from existing earthquake data by plotting log N versus M and performing linear regression on those points that fall above the minimum magnitude where the data set is complete. The formulas obtained in this manner can be extrapolated to determine the recurrence interval for the maximum probable earthquake in the region. Section 2.5.4.2 describes in some detail how these relations can be used in establishing risk and ultimately the DBE.

Shown in Figures 2.5-6 and 2.5-7 is a log N versus M plot for the combined time periods from January 1, 1962 through September 30, 1986. Seismographs were not in operation near the WIPP facility from July 24, 1980 to August 29, 1983. Linear regression for data points greater than magnitude 1.9 yields the recurrence equation,

$$\log N = 4.05 - 1.01\ M.$$

The value of "b," 1.01, is three percent less than that obtained by Sanford et al. (1.04) using data for the 3 1/4 year period, April 1974 through June 1977. The "a" values cannot be compared because (1) the magnitudes in Table 2.5-3 are on the average approximately 0.4 less than those listed in Sanford et al.,[45] (2) the time period is approximately three times greater here than in Sanford et al,[3] and (3) the degree of activity at the M2.0 strength level was not as great in later periods as it was from April 1974 through June 1977 (see histograms in Figure 2.5-5).

2.5.1.2.4 Geographic Distribution of Earthquakes

Table 2.5-3 differs in another important way from earlier listings of earthquakes within 180 mi (290 km) of the WIPP facility. All but a few shocks in the table have epicenters determined by the algorithm HYPO 71 Revised,[19] rather than by the circle-arc method. The locations from the latter method were retained only when a satisfactory solution could not be obtained from HYPO 71.[19] Inclusion of crustal shear wave (Sg) arrival time readings in the HYPO 71[19] program probably makes it superior to the circle-arc method.

The accuracy of locations in Table 2.5-3 depends on many variables: the number, distance, and distribution of stations providing readings for the solution, and the quality of crustal compressional wave (Pg) and Sg phases picked. For the events that occurred within or near arrays of stations, primarily during the period April 1974 through September 1980, the accuracy of locations is reliable. However, for most of the earthquakes during the 24 3/4 year period, the locations depended on readings from stations several hundred kilometers away, falling in a narrow azimuthal range relative to the epicenter. The error in location under these circumstances can be considerable. However, even in the worst case (generally earthquakes in the far southern and southeastern regions of the study area) the locations are believed to be within ±16 mi (±25 km).

Figure 2.5-8 is a map showing all epicenters listed in Table 2.5-3. The distribution of earthquake activity in this figure is compatible with the boundaries of source regions discussed in Section 2.5.4.1. On the basis of the seismic activity, the eastern boundary of the Rio Grande rift source zone can be placed at the boundary proposed by Algermissen and Perkins[21] or at the alternate boundary proposed in Section 2.5.4.1. The later boundary is clearly less well-defined by seismic activity than the Algermissen and Perkins boundary.

All boundaries proposed for the Central Basin Platform (CBP) in Section 2.5.4.1 are generally compatible with the distribution of earthquake activity in Figure 2.5-8, but none are totally satisfactory. The earthquake epicenters in the vicinity of the CBP appear to require enlargement of the source zone to the southwest and contraction to the east and northeast. The nearest approach of CAP seismicity to the WIPP site appears to be east of boundaries proposed by Algermissen and Perkins[22] and those suggested by geologic and tectonic consideration.

Figure 2.5-9 is a map showing epicenters from Table 2.5-3 that fall in the time period April 5, 1974 through October 6, 1978. To some extent, the maps presented in Figures 2.5-8 and 2.5-9 distort the distribution of seismic activity. Detection of smaller quakes in the data set was variable in space and time as a result of changes in the numbers and distribution of seismograph stations. To avoid this problem, Figure 2.5-10 shows only epicenters for earthquakes with $M \geq 2.5$, a cut-off level only slightly below the magnitude at which the data set is believed complete.

The temporal variability of earthquake activity on the CAP and elsewhere within 180 mi (290 km) of the WIPP facility is illustrated in Figures 2.5-11 through 2.5-18. Plotted in these figures are epicenters for events with M2.5 which occurred in eight sequential time periods, each of 1130 days duration from January 1, 1962 to September 30, 1986.

2.5.2 Geologic Structures and Tectonic Activity

A study of the WIPP facility region suggests a fundamental geologic and tectonic separation into two significantly different subregions: (1) the Permian Basin and (2) the Basin and Range subregions. The geologic structures and tectonism of the Permian Basin are dominantly associated with large-scale basin, interbasin and basin margin subsidence or emergence that occurred during the Paleozoic era. Basin and Range structures and tectonism to the west are those associated with Basin and Range topography. The activity characteristic of this subregion began in middle to late Tertiary time and is probably still occurring to some extent.

The Permian Basin subregion is defined as that part of the Permian Basin within the site region. The WIPP facility is slightly more than 60 mi (97 km) from the western margin of the Permian Basin (Figure 2.5-19). The Permian Basin is a broad structural feature made up of a series of Paleozoic sedimentary basins whose last episodes of large-scale subsidence during late Permian time were associated with a thick accumulation of evaporites. This basin now exists as a subsurface structural feature extending roughly from the Amarillo uplift on the north to the Marathon thrust belt on the south and some 300 mi (483 km) eastward from the Diablo platform and Sacramento and Guadalupe Mountain areas into west-central Texas.[23]

The development of the Permian Basin began with the formation of a broad sag (named the Tobosa basin[24]) following deposition of lower Ordovician strata. Prior to the late Mississippian, several periods of minor folding, faulting and uplift with erosion occurred. Nevertheless, general structural stability prevailed.[48,49,50] Subsequently, tectonic activity accelerated in the area climaxing in late Pennsylvanian and was split into two rapidly subsiding basins (the Midland to the east and the Delaware to the west) by the medial Central Basin Platform.[25] Structural development of the Permian Basin within this framework continued until late Permian when broad-scale basement stabilization occurred concurrently with evaporite deposition.

Thus, the major tectonic elements of the Permian Basin were completely formed before the deposition of Permian salt-bearing rocks, and relative crustal stability of the region has been maintained since Permian time. Since then, the Permian Basin has been characterized throughout the Mesozoic and Cenozoic eras by erosional processes interrupted by only minor episodes of terrestrial and shallow water deposition. Regionally, the Permian Basin has been tilted and warped, but deep-seated faults since Permian time are rare except along the western margin of the basin outside the area of salt preservation. In areas where salt is near the surface, such as southeastern New Mexico, there are no indication of younger deep-seated faulting and only a few isolated igneous intrusives of post-Permian age.[25]

The Basin and Range subregion is defined as that part of the Basin and Range physiographic province within the site region. As shown in Figure 2.5 19, this subregion borders the western margin of the Permian Basin subregion to the west and southwest of the site. The Basin and Range subregion is characterized by fault block mountain ranges, many of which are bounded on the west by major high-angle normal fault systems. Uplift along these fault systems has resulted in gentle eastward tilting of the mountain blocks and the formation of intermontane or graben-like valleys. Major development of these characteristic structural features occurred from late Tertiary into early Pleistocene time.[48,49,50] Continued tectonism in the Basin and Range subregion is suggested by widely scattered Quaternary fault offsets on the order one to several meters. A number of fault offsets of this age along the western flanks of the Guadalupe, Delaware, Sacramento and San Andres mountains are described in the literature.[26,27,48,49,50] More recently, additional but similar fault systems have been found and described within the Basin and Range physiographic province in Trans-Pecos, Texas.[28]

The different physiographies of the two site subregions, as defined and briefly described above, are closely related to their distinctive geologic histories and structural configurations. This is suggested by Figure 2.5-20 which shows the boundary between the great Plains and Basin and Range physiographic provinces.[48,49,50] For this reason, Figure 2.5-19 is a good approximation to the boundary between the Permian Basin and Basin and Range subregions as suggested by the geologic evidence just outlined.

The results of a 1978 leveling survey between El Paso, Texas and Carlsbad, New Mexico,[29] are consistent with this geologically suggested regional separation. Comparison of this survey with previous leveling surveys along the same route carried out in 1934, 1943 and 1958, indicates that the Diablo Plateau region of Trans-Pecos, Texas (in the Basin and Range subregion as defined above) has been uplifted approximately 4 to 5 centimeters during this interval in archlike fashion in relation to the end points of the survey. Extending east from El Paso, the leveling route traverses Basin and Range subregion-type structures including the Hueco Basin, the Hueco Mountains, the Diablo Plateau, the Salt Basin and the Guadalupe Mountains before terminating on the High Plains in the Permian Basin subregion near Carlsbad. The observed relative uplift correlates well with the broad aspects of the tectonic evolution of the Diablo Plateau. The observed elevation changes are most easily attributed to deep-seated tectonic activity.[29]

The observed movements along the El Paso - Carlsbad line are not the largest in the area. Movements along the Roswell-Pecos line, which is entirely within and near the western margin of the Permian Basin subregion, are larger (Figure 5 of Reference 42). However, the movements on this route, which runs along a railroad near the Pecos River, are probably dominated by artificial water withdrawal.[?,?] Carlsbad appears to be relatively "inactive" with respect to Roswell, which is located well outside regions of known neotectonic activity.[29]

In summary, the WIPP facility region leveling data are consistent with the geologic evidence in that they suggest current tectonic activity in the Basin and Range subregion and current stability in the Permian Basin subregion. Because current tectonic activity implies crustal movement that in turn implies elastic strain accumulation and release, earthquakes are often considered a barometer of tectonic activity. The occurrence of more frequent and larger earthquakes is thus consistent with a higher level of tectonism.

Earthquakes occurring between 1923 and 1979 and between April 1974 and February 1979 are superimposed on the suggested site subregions in Figures 2.5-19 and 2.5-21, respectively. From Figure 2.5-19 it may be seen that most pre-instrumental and a substantial proportion of 1962 to 1977 instrumental earthquakes are located in the Basin and Range subregion. In the Permian Basin subregion, an important cluster of instrumental epicenters occurs on the Central Basin Platform, and a thin scattering of both instrumental and pre-instrumental events appears throughout the rest of this subregion. In the case of pre-instrumental events in the WIPP facility region, this distribution of shocks may be at least partly controlled by a population density that has always been greatest along the Rio Grande rift (within the Basin and Range subregion). A somewhat similar pattern appears in Figure 2.5-21, although in this figure (for which the smaller magnitude events on the Central Basin Platform have been made recordable by the inclusion of data from station CLN at the location of the WIPP facility) the recent predominance of the Central Basin Platform in terms of the total number of recorded events is apparent. The largest recorded earthquake in the Basin and Range subregion is the 1931 Valentine, Texas event whose magnitude is estimated to be about 6.4. The largest event on the Central Basin Platform is of magnitude 3 to 4 depending upon precisely how magnitudes of events in these areas are calculated. The largest event in the Permian Basin subregion but, not on or near the Central Basin Platform, was the 16 June 1978 event near Snyder, Texas, at the extreme eastern margin of the site region. This event was about 4.7 in magnitude.

Based on 11 years of instrumental data (1962 - 1972 inclusive), analysis of earthquakes throughout New Mexico of magnitude greater than or equal to 2.5 (which are believed to have been uniformly located during this interval) indicates a roughly comparable level of earthquake activity in the inactive and in the active physiographic provinces.[2,18] This result must further qualify the confidence with which the modest differences in historical seismicity levels (in terms of number of events) in the (inactive) Permian Basin and (active) Basin and Range subregions can be argued to be significant.

Thus, in light of geologic evidence and consistent recent leveling survey data, the Basin and Range subregion, as shown in Figures 2.5-19 or 2.5-21, exhibits a higher level of recent tectonism than the Permian Basin subregion. This is supported by the maximum magnitude earthquakes occurring in these subregions during historical time. The distribution of all known site region earthquakes shows that, with the exception of the Central Basin Platform area, the Permian Basin subregion has experienced marginally fewer events than the Basin and Range subregion. A significant cluster of small events is located along the Central Basin Platform.

2.5.3 Correlation of Earthquake Activity with Geologic Structures or Tectonic Provinces

The best available evidence does not suggest that recorded earthquakes have been well correlated with faults anywhere in the WIPP facility region. This is true for both the surface faults of the Basin and Range subregion (a number of which show evidence of Quaternary movement) and for the geologically older subsurface faults in the Permian Basin subregion.

Although no earthquakes in the WIPP facility region are known to be correlated to specific faults, a substantial cluster of seismic activity has occurred on and near the Central Basin Platform since about the mid-1960s. This suggests division of the Permian Basin subregion into a Central Basin Platform portion and a background portion. The seismicity pattern leading to this suggestion is made fairly explicit in Figures 2.5-19 and 2.5-21. There is no known evidence of any differences since late Permian time in the geologic histories of the Central Basin Platform and surrounding portions of the Permian Basin (Sections 2.5.2). In addition, there does not appear to be enough data at present to convincingly determine the direction of tectonic forces and the type of faulting on the Central Basin Platform;[4] therefore, this information could not be used to distinguish the Central Basin Platform.

First Shurbet,[13] and later Sanford and Toppozada[1] and Rogers and Malkiel[15] suggested that Central Basin platform earthquakes are not tectonic but are instead related to water injection and withdrawal for secondary recovery operations in oil fields in the Central Basin Platform area. Such a mechanism for the Central Basin Platform seismic activity could provide a reason why the Central Basin Platform is separable from the rest of the Permian Basin on the basis of seismicity data but not by using other common indicators of tectonic character. Both the spatial and temporal association of Central Basin Platform seismicity with secondary recovery projects at oil fields in the area are suggestive of some cause and effect relationship of this type.[15]

In summary, the best available evidence does not suggest that known earthquakes are well correlated with faults in the WIPP facility region. A substantial number of earthquakes have occurred on and near the Central Basin Platform since about the mid-1960s. The cause of the spatial coincidence of recent seismicity with this buried large-scale Paleozoic structure is not known. With this exception, WIPP facility region earthquakes may be correlated with two tectonic provinces for the purposes of this study. The first is a relatively inactive province made up of the eastern and northeastern two-thirds (approximately) of the WIPP facility region (and encompassing the WIPP facility). The other WIPP facility region tectonic province is a relatively inactive province made up of the rest of the WIPP facility region. A simple and reasonable model of these two general WIPP facility region tectonic provinces is furnished by the Permian Basin/Basin and Range subregion characterization of Section .5.2.

2.5.4 Probabilistic Earthquake Potential

In recent years, several procedures have been developed that allow formal determination to be made of earthquake probabilistic design parameters[30,31] and a number of studies have been performed incorporating these procedures[22,32,33] In typical seismic risk analyses of this kind, the region of study is divided into seismic source areas within which future events are considered equally likely to occur at any location. For each seismic source area, the rate of occurrence of event above a chosen threshold level is estimated using the observed frequency of historical events. The sizes of successive events in each source are assumed to be independent and exponentially distributed; the slope of the log number versus frequency relationship is estimated from the relative frequency of different sizes of events observed in the historical data. This slope, often termed the b value,[16] is determined either for each seismic source individually or for all sources in the region jointly. Finally, the maximum possible size of events for each source is determined, using judgment and the historical record.[37] Thus, all assumptions underlying a measure of earthquake risk potential derived from this type of analysis are explicit, and a wide range of assumptions may be employed in the analysis procedure.

In this section, the particular earthquake risk parameter calculated is peak acceleration expressed as a function of annual probability of being exceeded at the WIPP site. The particular analysis procedure applied to the calculation of this probabilistic peak acceleration is taken from a computer program written by McGuire.[33] In that program the seismic source zones are modeled geometrically as quadrilaterals of arbitrary shape. Contributions to site earthquake risk from individual source zones are integrated into the probability distribution of acceleration, and the average annual probability of exceedence then follows directly. The theory and mechanics of McGuire's computer program may be found in a number of papers,[30,34] so they are not outlined here.

In the analysis, input parameters at each stage of the development are taken from the best conservative estimates. Where more than one good estimate exists, alternative values are examined. The principal input parameters are: site region acceleration attenuation, source zone geometry, recurrence statistics, and maximum magnitudes. Based on theses parameters, several curves showing probabilistic peak acceleration are developed, and the conclusions that may be drawn from these curves are considered. The data treated in this way are used to arrive at a general statement of risk from vibratory ground motion at the site during its active phase of development and use.

2.5.4.1 Acceleration Attenuation

The first input parameters considered are those having to do with acceleration attenuation in the site region as a function of earthquake magnitude and hypocentral distance. The risk analysis used in this study employs an attenuation law of the form,

$$a = b_1 \exp(b_2 M_L) R\text{-}b^3$$

where a is acceleration in cm/s^2, M_L is Richter local magnitude, and R is the distance in Kilometers. A number of relationships of the above from exist in the literature.[36,38] In all these studies, however, the constants b_1, b_2, and b_3 are found for data collected exclusively, or almost exclusively, west of the Rocky Mountains and are therefore perhaps not directly applicable at the WIPP facility region. Theoretical and empirical evidence indicates fundamental difference in acceleration attenuation between the western and central parts of the United States.[20,39,40]

The particular formula used in this study is based on a central United States model developed by Nuttli.[41,42] The formula coefficients $b_1 = 17$, $b_2 = 0.92$, and $b_3 = 1.0$ were selected as the best ones.

Curves using these coefficients are shown in Figure 2.5-23. This adopted attenuation law represents a conservative compromise between the estimated curves of various authors and the required form.[37,41,44]

Seismic Source Zones

Geologic, tectonic and seismic evidence indicates that three seismic source zones may be used to adequately characterize the region. These are well approximated by the Basin and Range subregion, the Permian Basin subregion exclusive of the Central Basin Platform, and the Central Basin Platform itself. The seismic source zones are outlined in Figures 2.5-19 and 2.5-21. However, specific boundaries are only intended to be simply defined approximations. For the purpose of earthquake risk analysis at the WIPP facility, some measure of the effect of the likely uncertainty in these source zone boundaries is desirable. Rather than allow the source zone boundaries to vary randomly by some amount, alternative boundaries are used based on an independent analysis of the WIPP facility region. These are taken from the study by Algermissen and Perkins of earthquake risks throughout the United States,[21] and were used in a previous analysis of WIPP site seismic risk by SNL.[15] A detailed discussion of how this characterization was developed and how it best fits recent estimates of site region seismic properties may be found in that reference.

Site region seismic source zones after Algermissen and Perkins are shown in Figure 2.5-23. Superposed on this figure are the earth-quake epicenters of Figure 2.5-1. It is clear from this superposition that the zonation presented generally conforms with historical seismicity. The source zonation of Figure 2.5-23 has no explicit analog to the Permian Basin subregion exclusive of the Central Basin Platform. This is considered part of the broad background region.

Another estimate of the appropriateness of the source zones as drawn in Figure 2.5-23 can be obtained from a consideration of Quaternary faulting. As shown in Figure 2.5-24, evidence of Quaternary fault offset is almost, but not quite completely, contained within the two western seismic source zones of Algermissen and Perkins. These two zones may be combined under the name "Rio Grande rift" since they include the parts of those provinces significant to the evaluation of probabilistic acceleration at the WIPP facility.

The general Algermissen and Perkins model, then, consists of three sources:

- The Rio Grande rift zone drawn by combining the western source zones as discussed above.
- The Central Basin Platform zone as shown in Figure 2.5-26.
- A WIPP site source zone centered at the site to model background seismicity in the High Plains. The manner in which the irregular Algermissen and Perkins source zones are adapted to the quadrilateral source zone configuration, which is required for the application of the seismic risk analysis method as discussed above, is straightforward (Figure 2.5-25).

For the purposes of this study, some minor modifications of the Algermissen and Perkins source zones were made. Geologic and tectonic evidence suggests that the physiographic boundary between the Basin and Range and Great Plains provinces provides a good and conservative approximation of the source zones as discussed in Sections 2.5.2 and 2.5.3. In addition, refined information from the Kermit array[15] indicates that the geometry used to model the limits of the Central Basin Platform source zone may be modified somewhat from the original preferred model for the WIPP site region seismic source zones in this study. This model is preferred because it is based more completely on consideration of geologic and tectonic information, as well as seismic data, and because it results in more conservative development of risks at the WIPP facility.

There is one purely geometrical issue to be resolved. It involves specifying a focal depth for events in each of the model source zones. There is little doubt that the focal depths of earthquakes in the WIPP facility region should be considered shallow. Early instrumental locations were achieved using an arc intersection method employing travel-time-distance curves calculated from a given crustal model, and the assumption of focal depths of 5 km, 10 km, or for later calculations, 8 km. Good epicentral locations could generally be obtained under these assumptions.

Within the range discussed, (that is, focal depths to 10 km) the issue of selecting a proper depth for the probabilistic acceleration analysis at the WIPP site may be shown to be important only in the site source zone itself. For example, the difference in hypocentral distance (the distance to be used in the acceleration attenuation formula) for a closest approach event in the Central Basin Platform is only 1.05 km in this depth range, assuming that the closest approach of this source zone is 35 km as indicated by Figures 2.5-25 and 2.5-26. This is clearly the greatest difference of this kind outside the WIPP facility source zone. Within the WIPP facility source zone the selection of focal depth can be very important simply because the form of the attenuation law used asymptotically approaches infinite acceleration at very small distances. This is certainly not mechanically realistic and is not the intent of the empirical fitting process to an attenuation law of this form. A focal depth of 5 km is used in all source zones of this study including that of the site. For smaller hypocentral distances, the form of the attenuation law adopted here severely exaggerates the importance of very small, very close shocks, in the estimation of probabilistic acceleration at the WIPP site (Figure 2.5-22).

2.5.4.2 Source Zone Recurrence Formulas and Maximum Magnitudes

The risk calculation procedure used in this study requires that earthquake recurrence rates for each seismic source zone be specified. This is done formally by computing the constants "a" and "b" in the equation,

$$\log N = a - b M$$

where N is the number of earthquakes of magnitude greater than or equal to M within a specified area occurring during a specified period.

For the WIPP facility region, three formulas of this type are needed—one for the active province west and southwest of the site (the Basin and Range subregion or Rio Grande rift source zone), another for the inactive province of the WIPP facility exclusive of the Central Basin Platform (the Permian Basin subregion or background source zone), and a final one for the Central Basin Platform. In practice, the difficulties in finding meaningful recurrence formulas for such small areas in a region of low historical earthquake activity are formidable.

Several estimates of recurrence rates in the WIPP facility region have been published.[1,14,21] For earthquakes within 180 mi (290 km) of the WIPP facility, exclusive of shocks from the Central Basin Platform and aftershocks of the 1931 Valentine, Texas earthquake, Sanford and Toppozada[1] find recurrence formulas of the form:

$$\log N_O = 1.65 - 0.6 M_L$$

using instrumental data only, and

$$\log N_O = 1.27 - 0.6 M_L$$

using both historical and instrumental data. In these and following recurrence formulas in this section, M_L is the Richter local magnitude and N_O is the number of earthquakes in the area of interest normalized to a time period of one year and an area of 3.6×10^4 mi^2 (9.3×10^4 km^2).

Because the numbers of shocks used to establish the linear portions of these curves are very small (16 and 25, respectively), and the total time intervals over which data were collected are very short (11 and 50 years, respectively), an error in the slope (or b value) is quite possible. In fact, a certain dissatisfaction with these results on the part of Sanford and Toppozada[1] is indicated by their development of alternative curves defined to have a slope of 1.0 instead of 0.6. To the problems imposed by the spatially and temporally restricted data set available must be added the fundamental uncertainty associated with the definition of magnitude in the WIPP facility region. However, Sanford et al.[3] indicate that data collected since the Sanford and Toppozada[1] study of 1974 do not change any of the original conclusions regarding the magnitude, location, and recurrence intervals of major earthquakes within 180 mi (290 km) of the WIPP facility.

Recent work[14] allows a preliminary treatment of the data. This work is based on 11 years of instrumental seismicity data which have been reinterpreted with respect to magnitude. In addition, recurrence formulas are computed for broad physiographic regions of New Mexico vastly increasing the data base. For example, Sanford et al.[14] find

$$\log N_O = 2.4 - 1.0\ M_L$$

for the High Plains physiographic province of the Permian Basin subregion or background source zone, and

$$\log N_O = 2.5 - 1.0\ M_L$$

for the Basin and Range - Rio Grande rift region. The b value in these equations is further substantiated by very recent work[44] in which all instrumental data on New Mexico earthquakes from 1962 through 1977 has been considered. The general criterion used in this earthquake risk analysis for the Rio Grande rift/Basin and Range subregion and Permian Basin/background source zones is the Sanford et al.[14] recurrence formula for the physiographic province. For this recurrence formula, an individual source zone occurs with the "a" value scaled to reflect area difference. The area of the High Plains province of interest for this analysis is approximately a 60 mi (97 km) radius [1.2×10^4 mi^2 (3.1×10^4 km^2)] surrounding the WIPP facility, but exclusive of part of the Central Basin Platform. Thus, the proper recurrence formula for site area background seismicity becomes,

$$\log N_O = 1.93 - M_L \text{Site source zone.}$$
(background)

Similarly, the part of the Southern Basin and Range - Rio Grande rift region of interest has been referred to in the above discussion as the Algermissen and Perkins[22] Rio Grande rift source zone and has an area of about 4.1×10^4 mi^2 (1.1×10^5 km^2). The proper recurrence formula for the Algermissen and Perkins Rio Grande rift source zone becomes,

$$\log N = 2.56 - 1.0\ M_L.$$

The Basin and Range subregion as shown in Figure 2.5-19 has an area of about 6.4×10^4 mi^2 (6.4×10^5 km^2). Thus, the proper recurrence formula for the Basin and Range Subregion becomes,

$$\log N = 2.75 - 1.0\ M_L.$$

This leaves only the Central Basin Platform, which is treated somewhat differently. Although the initial formulas[14] above were developed for areas near 7.2×10^4 mi^2 (1.9×10^5 km^2) (with some increased confidence in their validity because of the relatively large areas of data collection), this cannot be done for the Central Basin Platform source zone because it is unique and of very limited area. Therefore, it cannot be treated as a scaled-down version of some broader region. Although recent work using data from the Kermit array[15] is available for this source zone, the recurrence formulation of Sanford et al.[2] is used in this risk analysis primarily for consistency in approach. Based on the seismicity detected in the Central Basin Platform since the installation of station CLN in April 1974, the cumulative number of shocks versus magnitude may be expressed as,

$$\log N_O = 3.84 - 0.9\, M_L.$$

If the active portion of the Central Basin Platform is assumed to have an area of 2.9×10^3 mi^2 (7.5×10^3 km^2) during this period,[2] the proper recurrence relation for the Central Basin Platform source zone becomes,

$$\log N = 2.74 - 0.9\, M_L.$$

Because the Central Basin Platform seismicity is so really limited, this same recurrence formula is used for all alternative geometric characterizations. This has the effect of maintaining a constant activity rate for the Central Basin Platform as an entity.

These are the primary recurrence relationships used in the current risk analysis for the WIPP site. However, whereas magnitudes as used in the site region attenuation law above, or in consideration of maximum magnitude for a given source zone below, are by definition Richter local magnitudes, M_L, the earthquakes used to determine the recurrence formulas have measured magnitudes crucial to formula development. Some apparent disagreement exists in how site region magnitudes should be computed, with some suggestion [15] that the local magnitudes determined by Sanford et al.[2] may be, in some sense, too low. In order to test the effect of this possibility, an alternate set of recurrence formulas is derived by incrementing the M_L values in the above relationships by 0.5, in general agreement with the suggested relation between a "corrected" magnitude[15] and the local magnitude of Sanford et al.[2] The effect of this process is clearly to increase the activity rate of all source zones.

The four formulas now become:

$\log N = 2.43 - M_{CORR}$	Site source zone (background)
$\log N = 3.06 - M_{CORR}$	Algermissen & Perkins Rio Grande rift source zone
$\log N = 3.25 - M_{CORR}$	Basin & Range subregion
$\log N = 3.19 - 0.9\, M_{CORR}$	Central Basin Platform

The final parameter to be determined before WIPP facility risk may be computed is source zone maximum magnitude. A simple consideration of maximum historical magnitude within each of the three general source zones is not conservative. This is particularly true of the northern part of the Rio Grande rift source zone (Zone 43 of Algermissen and Perkins[22]) where a maximum historical intensity of only V is known. As discussed above, the fault scarps in these areas, particularly along the margins of the San Andres and Sacramento mountains, imply that major earthquakes have occurred in this region within the past 5 x 10^5 years. The length of the faulting in these two areas [about 36 to 60 mi (58 to 97 km)] suggests the possibility of earthquakes comparable in strength to the Sonoran earthquake of 1887.[1]

That Sonoran earthquake (M - 7.8) produced 50 mi (80 km) of fault scarp with a maximum displacement of about 28 ft (8.5 m) extending southward from the U.S. - Mexico border at about 109W longitude. Sanford and Toppozada[1] assume that a similar future event is possible west of a line whose location is in good general agreement with the eastern boundary of either the Rio Grande rift zone as shown in Figure 2.5-25, or the Basin and Range subregion as shown in Figure 2.5-26. This eclipses the more southerly Valentine, Texas earthquake, whose magnitude was about 6.4. For this analysis, a maximum magnitude event of 7.8 is assumed possible anywhere within the Rio Grande rift/Basin and Range subregion source zone.

The selection of maximum magnitude events for the WIPP facility source zone and the Central Basin Platform source zone is more difficult. Algermissen and Perkin[21] assign a maximum historical intensity of VI to the Central Basin Platform. This is presumably the earthquake of August 14, 1966 which has been assigned this intensity in United States Earthquakes 1966.[45] On the basis of this intensity and the empirical relationship of Gutenberg and Richter,[43] a maximum magnitude event of 4.9 has been selected for the Central Basin Platform by Algermissen and Perkins as appropriate for their probabilistic acceleration analysis. The magnitude scale was designed to give some indication of the elastic energy released at the earthquake source, and in this context a 4.9 value is almost certainly an exaggeration of the energy really released during that particular earthquake. This conclusion is based on both macroseismic and instrumental evidence. In addition, several magnitudes have been published for this earthquake (USCGS-3.4; Sanford et al.[2] - 2.5) which are substantially lower than the 4.9 value used by Algermissen and Perkins. As discussed above, the maximum historical magnitude in the Central Basin Platform source zone is probably between 3.0 and 4.0, even after uncertainty in magnitude calculation methods is considered.

The features of this source zone that might bear on its possible maximum magnitude are the lack of recent geologic evidence of tectonism and the high activity rate that may or may not be directly associated with secondary oil recovery efforts. Sanford and Toppozada[1] conjecture that the maximum magnitude might be 6.0 for this source zone, and in this study of risks, their example is followed for one set of calculations. Because this value may be exceptionally conservative, an alternative maximum magnitude of 5.0 is also considered.

With regard to the WIPP facility zone, there is even less indication that significant magnitude events are reasonably likely. There is no Quaternary fault offset,? and seismic activity is low. However, recent studies[17] show that some level of background seismicity must currently be considered for the site area if conservatism is to be served. Apparently, an earthquake that current best evidence indicates was tectonic in origin, and with a magnitude of 3.6 has, occurred within the site source zone itself, within about 40 km of the WIPP facility. In addition, the June 16, 1978 event with an approximate magnitude of 4.4 occurred within the Permian Basin subregion although near its extreme eastern margin. That event may have been induced by secondary oil recovery operations. Two maximum magnitudes are considered for the WIPP facility source zone in the risk analysis of this section: 4.5, that is, maximum historical event near the site of tectonic origin plus about one magnitude unit; and 5.5, the maximum event recorded anywhere within the Permian Basin subregion, plus about one magnitude unit.

2.5.4.3 Calculation of Risk Curves

Risk Curves for the WIPP facility calculated using the McGuire[35] formulation are presented in this section; first for individual model WIPP facility region source zones, and then for a few illustrative combinations of risks from all source zones in the WIPP facility region to form total WIPP facility risk curves. In particular, a set of curves is calculated for the WIPP facility source zone, another set for the Central Basin Platform and a third set for the Basin and Range or Rio Grande rift source zone to the west of the site. With a presentation of this type, the effect of earthquake source parameter variation may be explored source by source, and the inherent complexity of the broad spectrum parameter approach is thereby somewhat compartmentalized. The strength of the broad spectrum approach is that it allows an objective (although not precisely formulated) estimate of the uncertainty in risk values associated with given peak accelerations under the suite of possible geologic and seismic assumptions discussed previously.

For the Basin and Range subregion or the Rio Grande rift source zone, two geometries (Figures 2.5-23 and 2.5-26) and two recurrence formulas (Section 2.5.4.2), but only one maximum magnitude are considered. Thus, a total of four risk curves, for this general source area to the west of the site, are presented in Figure 2.5-27. The specific parameters associated with each of the four curves are listed in Table 2.5-4.

In the case of the Central Basin Platform source zone, three geometries (Figures 2.5-23 and 2.5-26), two maximum magnitudes, and two recurrence formulas are considered, so that a total of 12 risk curves are implied. However, preliminary calculations for the Central Basin Platform source zone as suggested by recent seismicity (Central Basin Platform source zone is outlined by heavy dashed lines in Figure 2.5-26) show that risks from this particular model of the Central Basin Platform source zone geometry are generally less at low accelerations and much less at higher accelerations than those derived from the two alternative geometries for given maximum magnitude and recurrence formula conditions. For example, considering the case of a maximum Central Basin Platform source zone with a magnitude of 6.0 , and a recurrence formula of the form $\log N = 3.19\text{-}0.9\ M_{CORR}$ annual risks of $3.07\text{x}10^{-3}$, $6.80 \text{ x } 10^{-3}$, and $1.50\text{x}10^{-3}$ at the 1.3 ft/s^2 (40 cm/s^2) acceleration level and $5.89\text{x}10^{-4}$, $1.46\text{x}10^{-3}$ and $3.67\text{x}10^{-5}$ at about the 2 ft/s^2 (60 cm/s^2) acceleration level are computed at the site using the Algermissen and Perkins,[21] Central Basin Platform geology and recent Central Basin Platform seismicity suggested source geometries, respectively. Thus, the four risk curves for the seismically implied Central Basin Platform source geometry as shown in Figure 2.5-26, in association with the two maximum magnitudes and recurrence formulas for this source zone discussed above, cannot produce the most conservative estimation of risk at the WIPP facility. Because of the way risks from various source zones are combined to derive total risk curves, the do not lead to significantly lower estimates of total WIPP facility risks than those obtained using the Algermissen and Perkins geometry, given the particular form of the individual source zone risk curves in this study. Therefore, risk curves corresponding to the two alternative geometries are shown in Figure 2.5-28.

Finally, two maximum magnitudes and two recurrence formulas are considered for the background seismicity of the site source zone. The four risk curves thereby implied are shown in Figure 2.5-29. To aid in the task of keeping the assumptions underlying all these curves accessible, the parameters associated with each curve in Figures 2.5-27 through 2.5-29 are listed in Table 2.5-4.

The effects of varying the maximum magnitude within a given source zone are straightforward, although the details of these effects at the WIPP facility depend on the specific source-site geometric configuration. The general effect of increasing the maximum magnitude in any source zone is to increase the maximum acceleration at the WIPP facility attributable to that source zone, and to increase the WIPP facility risks from that source zone at all lower acceleration levels. In the case of the Central Basin Platform source zone, increasing the maximum source magnitude from 5.0 to 6.0 has the effect of increasing the WIPP facility risk from this source by a factor of 12.7 for the case of the Algermissen and Perkins[21] geometry, and about 18.5 for the geologically suggested source geometry at the 40 cm/s^2 acceleration level. This may be seen by comparing curves (1,2), (3,4), (5,6), and (7,8) of Figure 2.5-28. At low risk levels, the asymptotic approach of the lower maximum magnitude curves (the odd numbered curves of Figure 2.5-28) to an acceleration of just under 1.6 ft/s^2 (50 cm/s^2), and of the higher maximum magnitude (or even numbered) curves to an acceleration of about 3.94 ft/s^2 (120 cm/s^2), is clear. Very similar behavior is exhibited in Figure 2.5-29 for the background seismicity of the WIPP facility source zone. In this case, the ratio of site risks at the 1.3 ft/s^2 (40 cm/s^2) acceleration level due to curves generated using maximum magnitudes of 4.5 and 5.5 is 1.21, and somewhat over twice this at the 4.59 ft/s^2 (140 cm/s^2) level.

The effect of different recurrence formulas may be seen in any of Figures 2.5-27 through 2.5-29. As discussed above, the reason for considering different recurrence formulas is primarily to address the issue of uncertainty in the WIPP facility region magnitude determination, since the way in which magnitudes of recently recorded earthquakes are determined has a direct bearing on the form of the recurrence formulas derived for source zones in the WIPP facility region. In contrast, the maximum magnitudes specified for each of these source zones do not depend critically on calculated magnitudes, and therefore, are not dependent on the method of magnitude determination. For a given source zone geometry, maximum magnitude, and acceleration attenuation law, all risk curves approach the same maximum acceleration asymptote. The effect of any uncertainty in magnitude determination (acting through differences in recurrence formulas) is most noticeable at relatively higher risk levels. This may be seen by comparing curve pairs (1,2) or (3,4) in Figure 2.5-27, pairs (1,3), (2,4), (5,7) or (6,8) in Figure 2.5-28, or pairs (1,3) or (2,4) in Figure 2.5-29. For each of these risk curve pairs, the curves differ only in recurrence formula. The risk level at which convergence occurs for each of these pairs is clearly dependent on the risk level at which asymptotic behavior becomes evident under a given set of conditions. Convergence is not evident under the parameters used for the site source zone at the probabilities considered. For the two Central Basin Platform source zone geometries, convergence takes place at probabilities near 10^{-5} for a maximum source zone magnitude of 5.0, and at lower probabilities for the higher 6.0 maximum magnitude. This relatively simple behavior of curves from two different geometries occurs because the closest approach to the site is virtually identical for each of the two alternate Central Basin Platform source zones whose risk curves are platted in Figure 2.5-28. For earthquakes in the Basin and Range subregion or Rio Grande rift source zone, convergence is not evident at the lowest annual risk level calculated. For each of the cases discussed, different recurrence formulas lead to significantly different accelerations at risks lower than the convergence values. The final effect of parameter variation on the individual source zone risk curves has to do with the variation of the geometries of these zones. This effect is most easily seen in Figure 2.5-27 where effects of maximum magnitude variation do not occur. Curve pairs (1,3) and (2,4) in this figure differ only in source zone geometry characterization. The ratio of these curve pairs is not greatly dependent on risk level, being near 2.1, 3.4, and 2.6 for accelerations of 40, 80 and 3.94 ft/s^2 (120 cm/s^2), respectively.

In both cases, risks from the Basin and Range subregion characterization are somewhat higher at a given acceleration level than those from the Rio Grande rift source zone of Algermissen and Perkins, because a slightly greater proportion of the Basin and Range subregion is closer to the WIPP facility, as may be seen by comparing Figures 2.5-25 and 2.5-26. For the Central Basin Platform source zone curve pairs (1,5), (2,6), (3,7), and (4,8) differ only by source geometry. The asymptotic convergence of these risk curve pairs closely approximates the behavior of convergence under recurrence formula variation discussed above, and at about the same risk levels for given maximum magnitude conditions. Again, variation is greatest at high risk levels. Ratios of risk levels for the curve pairs above are almost independent of the recurrence formula being 1.5 for curve pairs (1,5) and (3,7) and 2.2 for pairs (2,6) and (4,8) at the 1.3 ft/s^2 (40 cm/s^2) acceleration level.

In very general terms, increasing the maximum magnitude of any source zone using the recurrence formulas suggested by the magnitude calculation of Rogers and Malkiel,[15] or selecting the geology implied Central Basin Platform and Basin and Range subregion source zone geometries, has the effect of increasing site risk levels. Using these observations, several extreme WIPP facility risk curves are generated below.

Although much can be learned by considering each WIPP facility region source zone separately, several important issues cannot be addressed until total risk curves are generated combining the contributions from the individual source zones. The process is illustrated graphically in Figure 2.5-30. In this figure are shown the individual source zone curves for the Algermissen and Perkins[21] Central Basin Platform and Rio Grande rift zones (Figure 2.5-25) for maximum magnitudes of 6.0 and 7.8 respectively, and for the site source zone using a maximum magnitude of 5.5. In each case, the Sanford et al.[2] recurrence formulas are used. These are curve 2 of Figure 2.5-28, 1 of figure 2.5-27, and 2 of Figure 2.5-29. The total WIPP facility risk curve calculated by combining these three individual curves is shown as a solid light line in Figure 2.5-30. This particular total risk curve closely approximates the most conservative curve calculated in the WIPP Geological Characterization Report (Figure 5.3-6 of Reference 30, curve 4), except that a maximum WIPP facility source zone magnitude of 5.5 instead of 5.0 is used. One point is clear from Figure 2.5-31, under the assumptions used to calculate the source zone risks shown in this figure, the significance of the Rio Grande rift source zone to the total risk at the WIPP facility is relatively small at all acceleration levels. In fact, this is a general result for all combinations of source zone parameters considered. For the earthquake recurrence relationships considered for the various source zones, this will be true at lower acceleration levels no matter what assumptions are made about the maximum magnitudes in the WIPP facility and Central Basin Platform source zones. At higher acceleration levels, this will be true unless the lowest maximum magnitude proper for the WIPP facility source zone is lower than the 4.5 value considered here.

Note further that for the case considered in Figure 2.5-30, where 6.0 is the maximum magnitude event for the Central Basin Platform source zone, probabilities are largely controlled by earthquakes in this zone up to accelerations of around 0.04 g. For higher accelerations, the WIPP facility source zone is more important. The cross-over acceleration is clearly a function of the relative maximum magnitudes in the Central Basin Platform and WIPP facility source zones. For a lower maximum magnitude in the WIPP facility source zone relative to the Central Basin Platform source zone, the latter zone would be expected to dominate the WIPP facility total risk curve to higher acceleration levels. If the Central Basin Platform source zone maximum magnitude is lower relative to the WIPP facility source zone, its significance is totally eclipsed by the WIPP facility source zone at all acceleration levels. Perhaps the most obvious feature of the total risk curve of Figure 2.5-31 is its dominance by the WIPP facility source zone at higher accelerations. Consideration of different combinations of source zone parameters indicates that this feature of risk curves at the WIPP facility is universal for all cases derivable from the parameters considered. Therefore, if the probabilities at which these higher acceleration levels occur are thought to be of interest, it is the assumptions made about the immediate WIPP facility area that are most critical.

The question of total WIPP facility risk at a number of acceleration levels and under a number of assumptions about source zone parameters is addressed graphically in Figure 2.5-31, where several extreme cases are considered. Four curves in all are shown. Curves 1 and 2 both assume maximum source zone magnitudes of 7.8, 6.0, and 5.5 for the Basin and Range subregion (or Rio Grande rift), Central Basin Platform, and WIPP facility source zones, respectively, and recurrence formulas suggested by the Roger and Malkiel[15] magnitudes. That is, curve 1 of Figure 2.5-31 is the result of combining individual source zone risks at the WIPP facility represented by curve 4 of Figure 2.5-27, curve 8 of Figure 2.5-28, and curve 4 of Figure 2.5-29. Similarly, curve 2 of Figure 2.5-31 is the result of combining individual source zone risks at the site represented by curves 2 and 4 of Figures 2.5-27 through 2.5-29, respectively. The difference between curves 1 and 2 of Figure 2.5-31 is that curve 2 uses source zone geometries taken from Algermissen and Perkins,[21] while curve 1 uses the slightly more conservative alternate source zone geometries discussed in Section 2.5.4.2. Curves 3 and 4 of Figure 2.5-31 both assume smaller maximum source zone magnitudes of 7.8, 5.0, and 4.5 for source zones taken in the same order as above and recurrence formulas suggested by Sanford et al.[14] The individual risk curves used to generate these two total risk curves may be deduced from the above description and Table 2.5-4. The differences between curves 3 and 4 are precisely the geometric differences between curves 1 and 2.

It is clear from the four total site risk curves of Figure 2.5-31 that the geometric differences considered for the source zones do not introduce important differences in total WIPP facility risk at any acceleration level, although what small differences do exist are most evident at low accelerations. More importantly, for all parametric variations allowed in this study, extremum curves as shown in this figure imply accelerations associated with 10^{-3}/y risks ranging between about 1.31 and 2.46 ft/s^2 (40 and 75 cm/s^2), accelerations associated with 10^{-4}/y risks between 75 and 130 cm/s^2, and 10^{-5}/y risk accelerations between 4.27 and 8.04 ft/s^2 (130 and 245 cm/s^2).

2.5.5 Design Basis Earthquake

The stringent seismic criteria for nuclear power plants do not apply to the WIPP facility due to the unique character of the design and function of the facility. In particular, the terms "Operating Basis Earthquake" (OBE) and "Safe Shutdown Earthquake" (SSE) are not applied to the WIPP facility. Rather, the term "Design Basis Earthquake" (DBE) is used for the design of Class II and IIIA confinement structures and components (Section 3.2.7). As used here, the DBE is equivalent to the design earthquake used in Regulatory Guide 3.24 (U.S. Nuclear Regulatory Commission).[?] That is, in view of the limited consequences of seismic events in excess of those used as the basis for seismic design, the DBE is such that it produces ground motion at the WIPP facility with a recurrence interval of 1,000 years (Section 3.1.3). In practice the DBE is defined in terms of the 1,000-year acceleration and design response spectra.

The generation of curves expressing probability of occurrence or risk as a function of peak WIPP facility ground acceleration is discussed in detail in Section 2.5.4 for a number of possible characterizations of WIPP facility region source zones and source zone earthquake parameters. The most conservative (and the least conservative) risk curves are shown in Figure 2.5-31.

From this figure, the most conservative calculated estimate of the 1000 year acceleration at the WIPP facility is seen to be approximately 0.075g. The geologic and seismic assumptions leading to this 1000-year peak acceleration include the consideration of a Richter magnitude 5.5 earthquake at the site, a 6.0 magnitude earthquake on the Central Basin Platform, and a 7.8 magnitude earthquake in the Basin and Range subregion. These magnitudes correspond roughly to equivalent epicentral intensity events of VII, VIII and XI on the Modified Mercalli intensity scale.[8] These values, especially the first two, are considered quite conservative, and the other parameters used in the 0.075g derivation are also very conservatively chosen. For additional conservatism, a peak design acceleration of 0.1g is selected for the WIPP facility DBE. The design response spectra for vertical and horizontal motions are taken from Regulatory Guide 1.60 (U.S. Nuclear Regulatory Commission)[46] with the high frequency asymptote scaled to this 0.1g peak acceleration value. These response spectra are shown in Figures 3.2-2 and 3.2-3.

This DBE and the risk analysis that serves an important role in its definition are directly applicable to Design Class II and IIIA confinement structures and components at the WIPP Facility. Underground structures and components are Design Class IIIB and as such are not subject to DBE. Mine experience and studies on earthquake damage to underground facilities[47] show that tunnels, mines, wells, etc., are not damaged for sites having peak accelerations at the surface below 0.2g.

Design Class IIIB underground facilities do not require the consideration of seismic effects based on the above, and seismic load combinations with increased allowable stresses will not control the design.

References for Section 2.5

1. New Mexico Bureau of Mines and Mineral Resources, Seismicity of Proposed Radioactive Waste Isolation Disposal Site in Southeastern New Mexico, 1974.

2. New Mexico Institute of Mining and Technology, Report to Sandia Laboratories, A Report on Seismic Studies of the Los Medanos Area in Southeaster New Mexico, 1978.

3. SAND80-7096, New Mexico Institute of Mining and Technology, Report to Sandia National Laboratories Seismicity in the Area of the Waste Isolation Pilot Project. Released as a Sandia National Laboratories Report, 1980.

4. U.S. Dept. Commerce, United States Earthquakes 1930, Coast and Geodetic Survey, Washington, D.C., 1932.

5. U.S. Dept. Commerce, United States Earthquakes, 1931, Coast and Geodetic Survey, Washington, D.C., 1932.

6. U.S. Dept. Commerce, United States Earthquakes 1936, Coast and Geodetic Survey, Washington, D.C., 1938.

7. Seismol. Soc. Am. Bull., Modified Mercalli Intensity Scale of 1931, 1931.

8. Univ. Tex. Bull. No. 3201, The Valentine, Texas Earthquake, 1933.

9. Seismol. Soc. Am. Bull., Catalog of Nevada Earthquakes, 1852-1960, 1965.

10. Prentice-Hall Inc., Englewood Cliffs,N.J., Earthquake Engineering, 1970.

11. Princeton Univ. Press, Seismicity of the Earth and Associated Phenomena, 1954.

12. New Mexico Bureau Mines and Mineral Resources, Seismicity of the Rio Grand Rift in New Mexico, 1972.

13. Geol. Soc. Am. Abstracts with Programs, The Seismicity of New Mexico 1962 through 1972, 1976.

14. U.S. Dept of the Interior, U.S. Geological Survey, Monthly Listing, Preliminary Determination of Epicenters, Washington, D.C., 1973, 1974, 1977.

15. Sandia Laboratories, Geological Characterization Report, 1978.

16. New Mexico Institute of Mining and Technology, Oak Ridge Operations Contract No. AT-(40-1)-4582, A Report on Seismic Recording at the Los Medranos Area of Southeastern New Mexico, 1974-1975, 1976.

17. New Mexico Institute of Mining and Technology, Geophysics Open-File Report 45, A Magnitude Scale for Central New Mexico Based on Signal Duration, 1983.

18. U.S. Geol. Surv. Open-file Report, A Computer Program for Determining Hypocenter, Magnitude, and First Motion Pattern of Local Earthquakes, 1972.

19. J. Geophys. Res., 78, Seismic Wave Attenuation and Magnitude Relations for Eastern North America, 1973.

20. Los Alamos Scientific Laboratory, Informal Report LA-6406-MS, LASL Seismic Programs in the Vicinity of Los Alamos, New Mexico, 1976.

21. U.S. Geol. Srv. Open-file Report 76-416, A Probabilistic Estimate of Maximum Ground Acceleration in the Contiguous United States, 1976.

22. A.A.P.G. Bull. 47, Late Paleozoic Tectonics and Mountain Ranges, Western Texas to Southern Colorado, 1963.

23. Habitat of Oil-A Symposium, Oil and Geology in the Permian Basin of Texas and New Mexico, 1958.

24. New Mexico Bureau of Mines and Mineral Resources, New Mexico Institute of Mining and Technology, Oil and Gas Potential of a Proposed Site for the Disposal of High-Level Radioactive Waste, Oak Ridge Nat'l Laboratories, Open-file Report, 1974.

25. Science, 79, Scarps in Tularosa Valley, New Mexico, 1934.

26. Am.J. Sci., Recent Fault Scarps, Organ Mountain District, New Mexico, 1938; U.S. Geol. Surv. Prof. Paper 215, Geology of the Southern Guadalupe Mountains, Texas, 1948.

27. Geology, 6, Quaternary Faulting in Trans-Pecos Texas, 1978.

28. J. Geophys. Res., 83, No. B 11, Contemporary Uplift of the Diablo Plateau, West Texas, from Leveling Measurements, 1978.

29. U.S. Geological Survey, The National Atlas of the United States of America, U.S. Dept. of the Interior, Washington, D.C., 1970.

30. Fourth World Conf. on Earthquake Engineering, Santiago, Chile, Vol. I, The Major Influences on Seismic Risk, 1969.

31. J. Struct. Div., Am. Soc. Civil Eng., 10, Seismic Risk Analysis of Boston, 1975.

32. Dept. of Civil Eng., A Study of Seismic Risk for Nicaragua, Report 11, Stanford Univ., Stanford, California, 1975.

33. Seismol. Soc. Am. Bull., 67, Effects of Uncertainty in Seismicity on Estimates of Seismic Hazard for the East Coast of the United States, 1977.

34. Interscience, London, Probabilistic Analysis of Damage to Structures Under Seismic Load; Dynamic Waves in Civil Engineering, 1971.

35. Seismol. Soc. Am. Bull., 63, Seismic Risk Analysis Based on a Quadratic Magnitude-Frequency Law, 1973.

36. Earthquake Eng. Res. Center, Report no 68-5, Characteristics of Rock Motions during Earthquakes, 1968.

37. Seismol. Soc. Am. Bull., 64, Prediction of Peak Ground Motion from Earthquakes, 1974.

38. Seismol. Soc. Am. Bull., 57, Magnitude Determination at Regional and Near-Regional Distances in the United States, 1967.

39. J. Geophys. Res., 78, Radiation and Attenuation of Rayleigh Waves from the Southeastern Missouri Earthquake of October 21, 1965, 1973.

40. Seismol. Soc. Am. Bull., 63, The Mississippi Valley Earthquakes of 1811 and 1812 - Intensities, Ground Motion and Magnitudes, 1973.

41. U.S. Army Waterways Experiment Station, Vicksburg, Mississippi, Design Earthquakes for the Central United States, Misc. Paper S-73-1, 1973.

42. Seismol. Soc. Am. Bull., 32, Earthquake Magnitude, Intensity, Energy and Acceleration, 1942.

43. Seismol. Soc. Am. Bull., 63, Accelerations in Rock for Earthquakes in the Western United States, 1973.

44. New Mexico Institute of Mining and Technology, Geophysics Open-file Report 26, Earthquake activity in New Mexico (1849 through 1977), 1978.

45. U.S. Department Commerce, United States Earthquakes 1966, 1974.

46. U.S. Nuclear Regulatory Commission, Regulatory Guide 1.60, Design Spectra for Seismic Design of Nuclear Power Plants, Revision 1, December 1973.

47. Vol. 1 Proceedings 1979 RETC, AIME, Littleton, CO., Earthquake Damage to Underground Facilities, Draft, 1979.

48. SAND 88-0157, UC-70, Sandia National Laboratories, Summary of Site-Characterization Studies conducted From 1983 Through 1987 at the Waste Isolation Pilot Plant (WIPP) Site, Southeastern New Mexico, Reprinted January 1989.

49. SAND 78-1596, Sandia National Laboratories, Geological Characterization Report, Waste Isolation Pilot Plant (WIPP) Site, Volume I, Southeastern New Mexico, August 1978.

50. SAND 78-1596, Sandia National Laboratories, Geological Characterization Report, Waste Isolation Pilot Plant (WIPP) Site, Southeastern New Mexico, Volume II, August 1978.

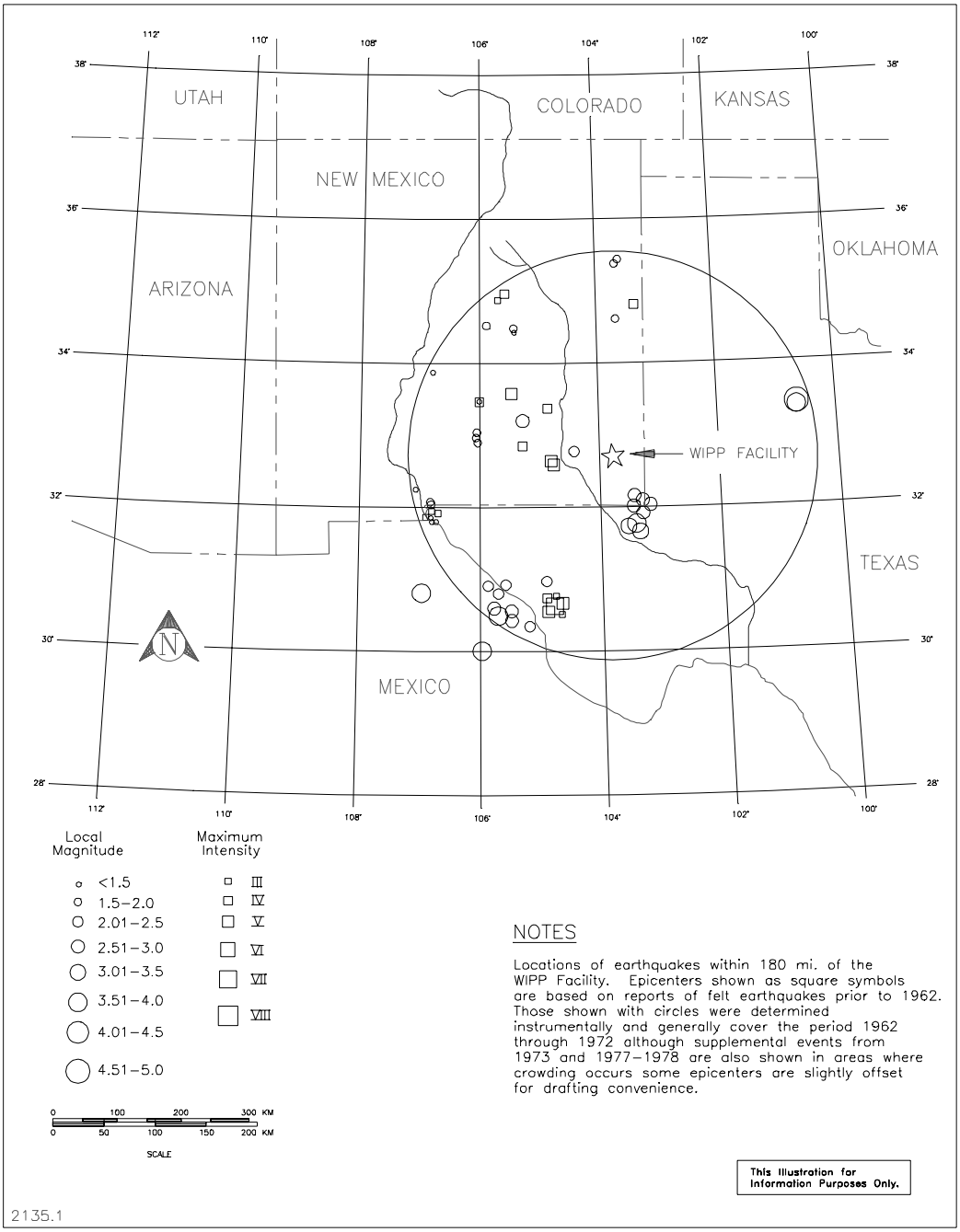

Figure 2.5-1 Earthquakes Located Using Macroseismic or Regional Seismographic Data 1923 - 1977

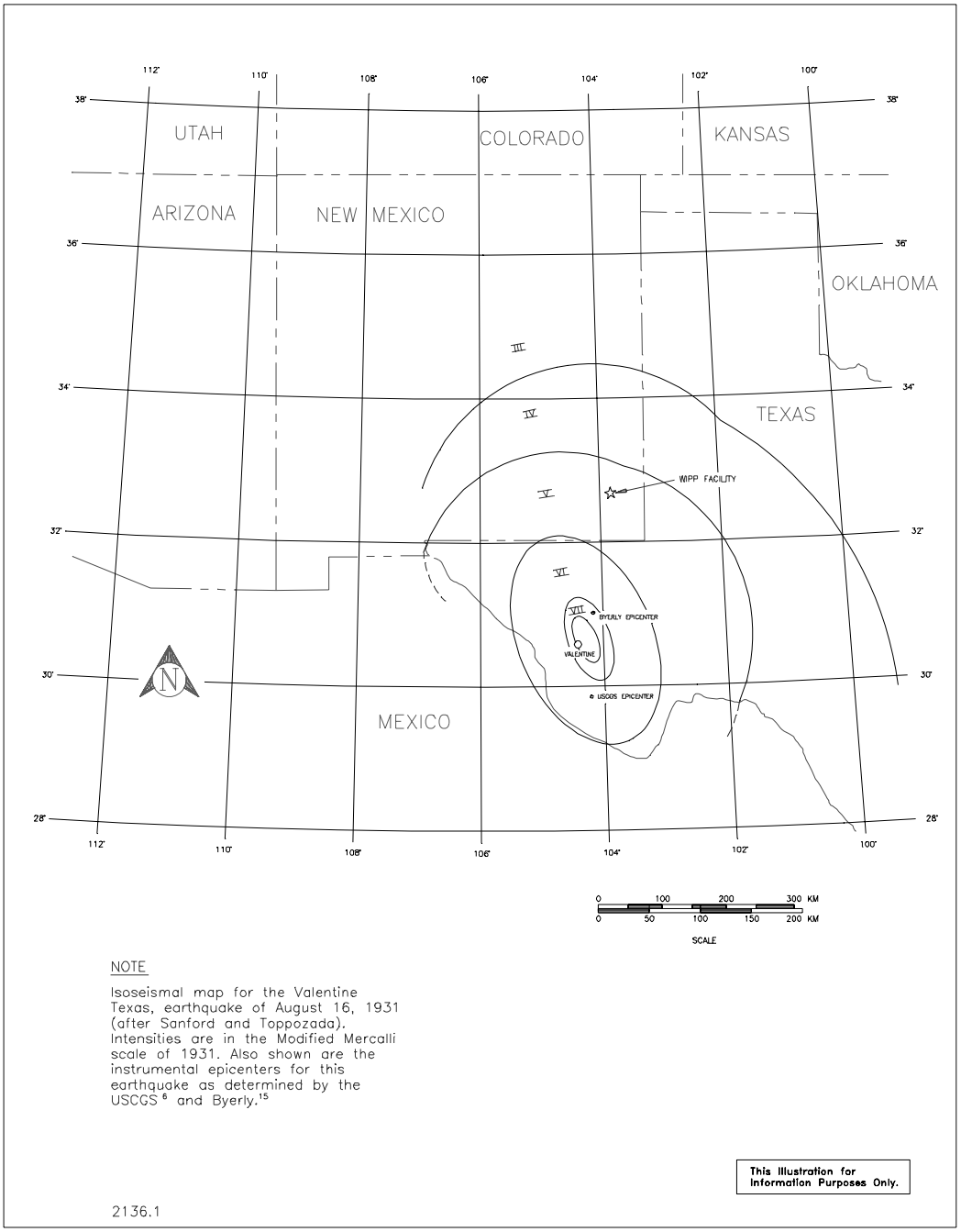

Figure 2.5-2 Valentine, Texas, Earthquake Isoseismals

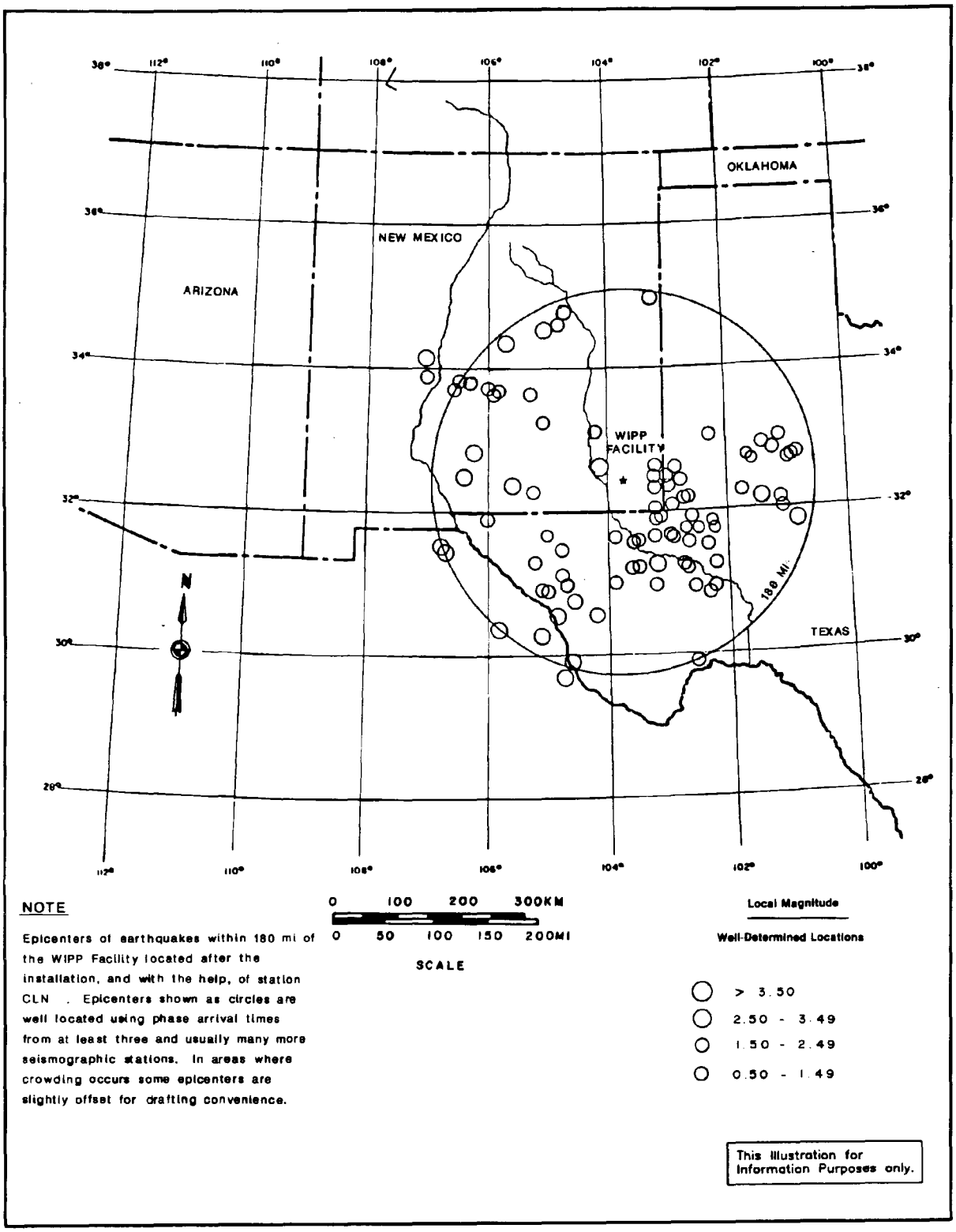

Figure 2.5-3 Earthquakes Located with the Help of Data from Station CLN(April 1974 - February 1979)

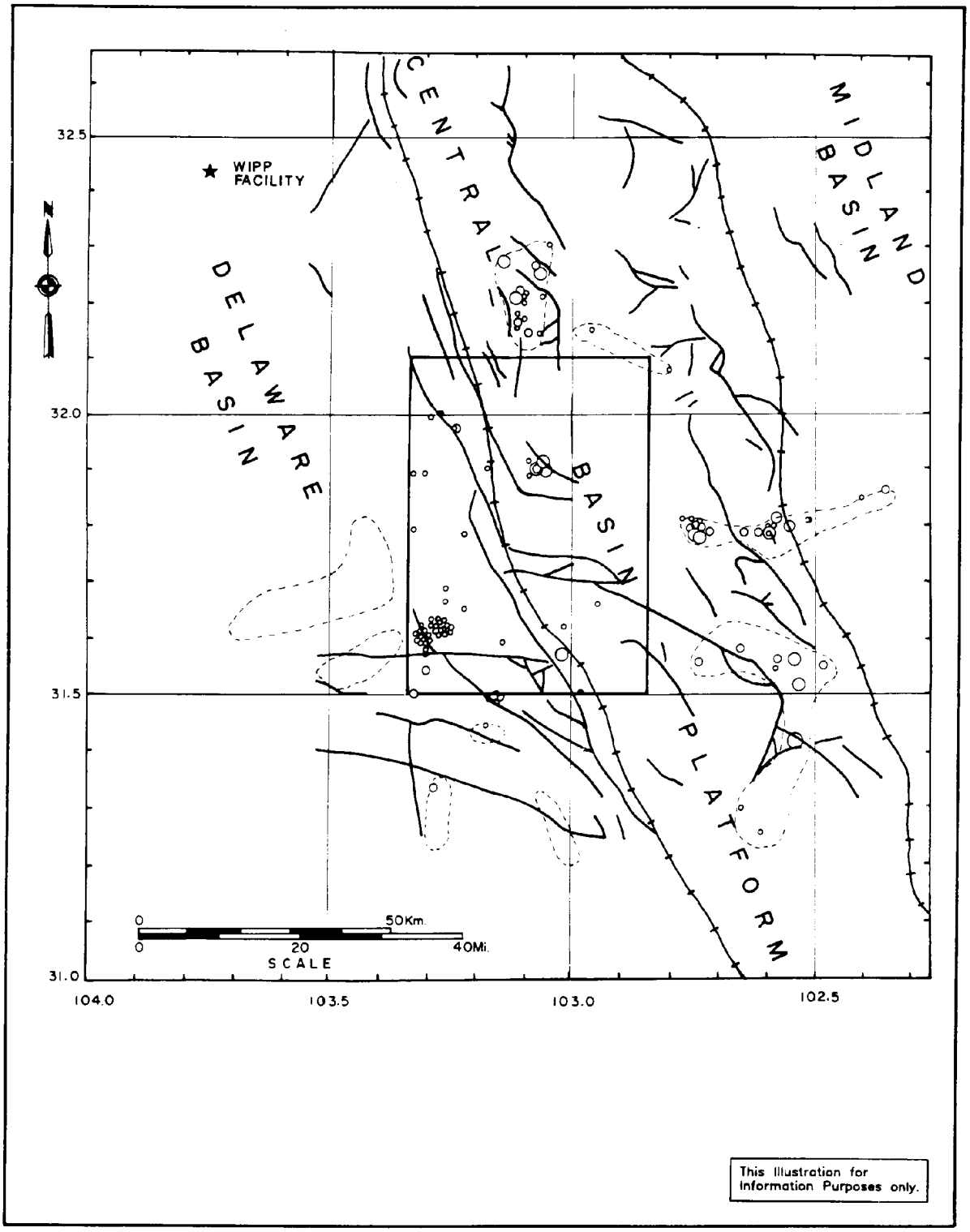

Figure 2.5-4a Earthquakes Location Using Kermit Array Data November 1975 through July 1977

NOTE

Earthquakes located using the Kemit array network.[15] All located events within the array (denoted by the small rectangular area in the map to the left and in the regional scale inset above) are shown, as well as those shocks on the array's periphery located by five or more array stations. The light dashed lines enclose peripheral epicenters whether or not they satisfy the five station criterion. Solid lines are pre—Permian faults, and the cross hatched lines the approximate boundary of the Central Basin Platform, both after Rogers and Malkiel.[15] The regional location map below shows the total map area to the left as well as the Kermit array limits in a large scale context.

Magnitude (M_{LD})

- ∘ ≤ 2.35
- ○ 2.36—2.85
- ◯ 2.86—3.35
- ⬭ ≥ 3.36

2139.2

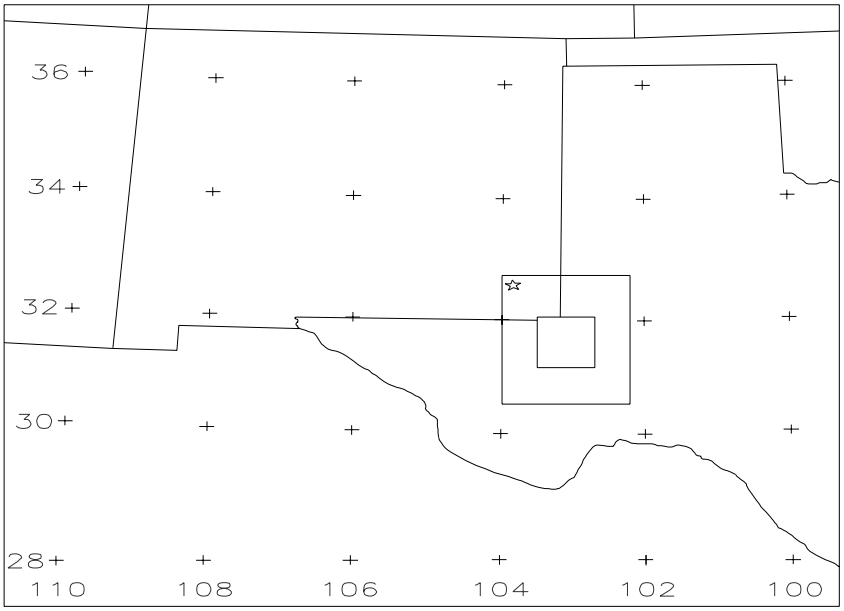

Figure 2.5-4b Explanation to Figure 2.5-4a

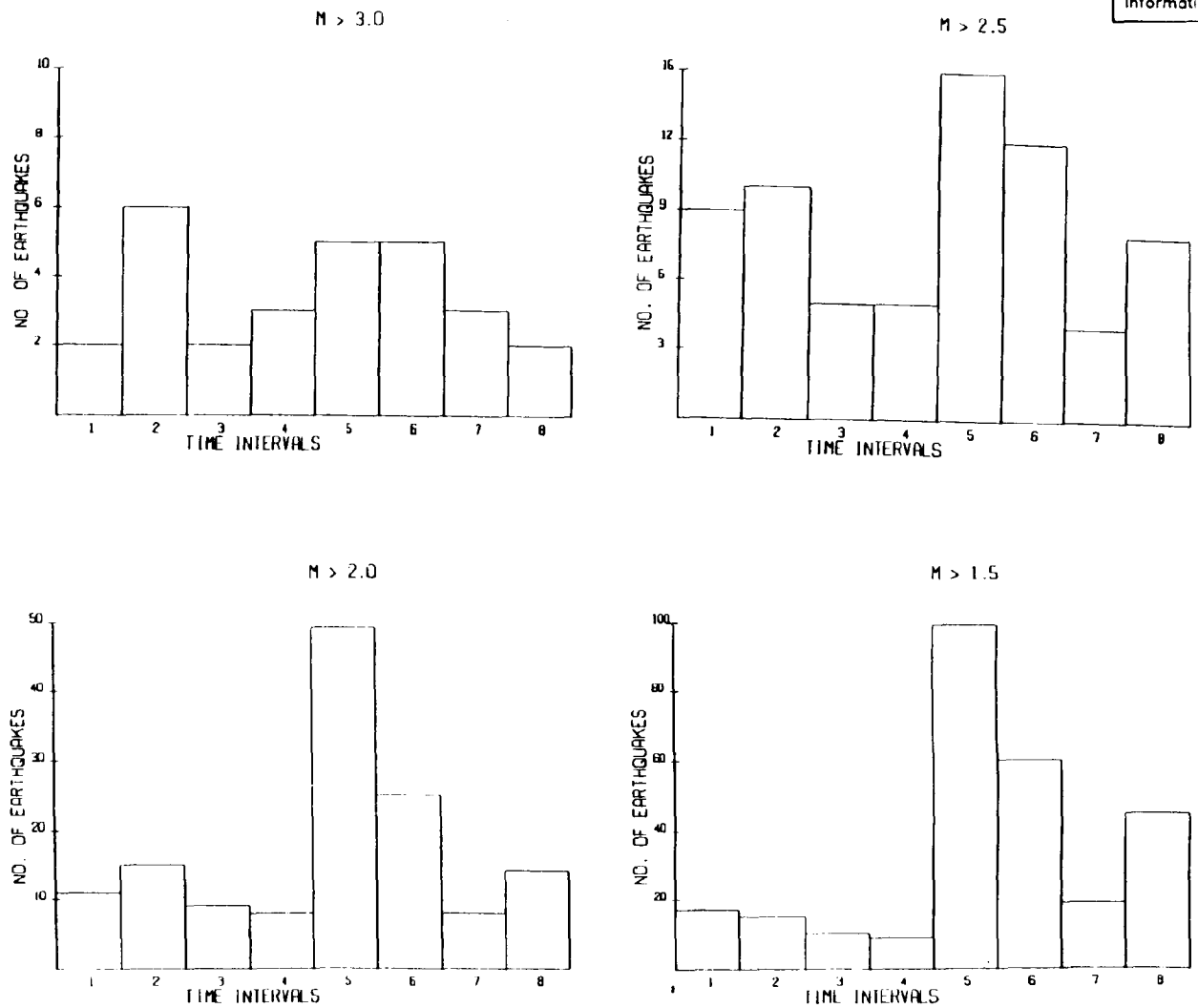

NOTE:

The 24 3/4 year period from 1 January 1962 through 30 September 1986 was divided into eight sequential intervals of 1130 days each. Shown in these four histograms are the numbers of events in each interval with M≥3.0, M≥2.5, M≥2.0 and M≥1.5.

Figure 2.5-5 Histograms of Number of Earthquakes: 1 January 1962 through 30 September 1986

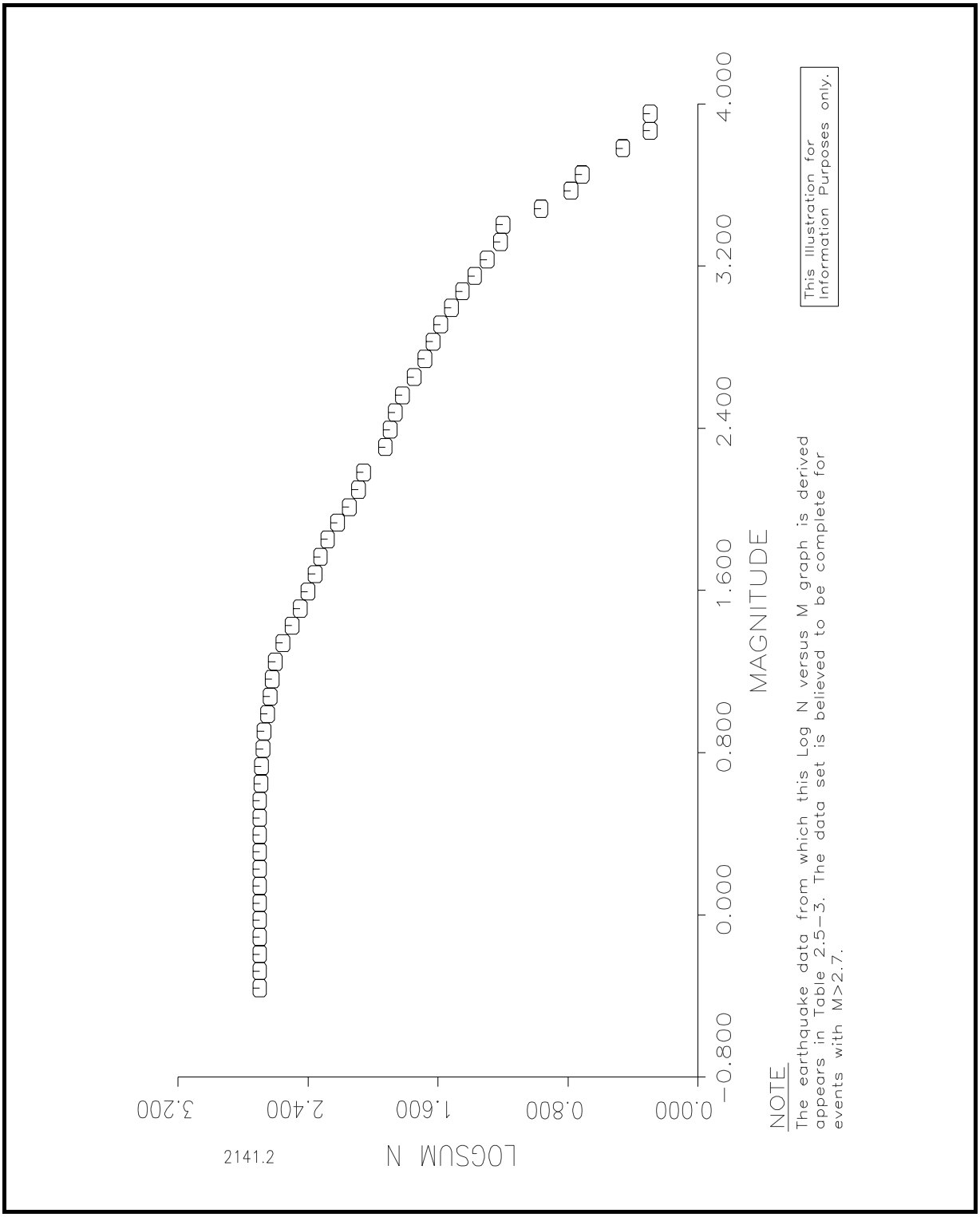

Figure 2.5-6 Earthquakes Recurrence Data (Log N versus M): 1 January 1962 through 30 September 1986

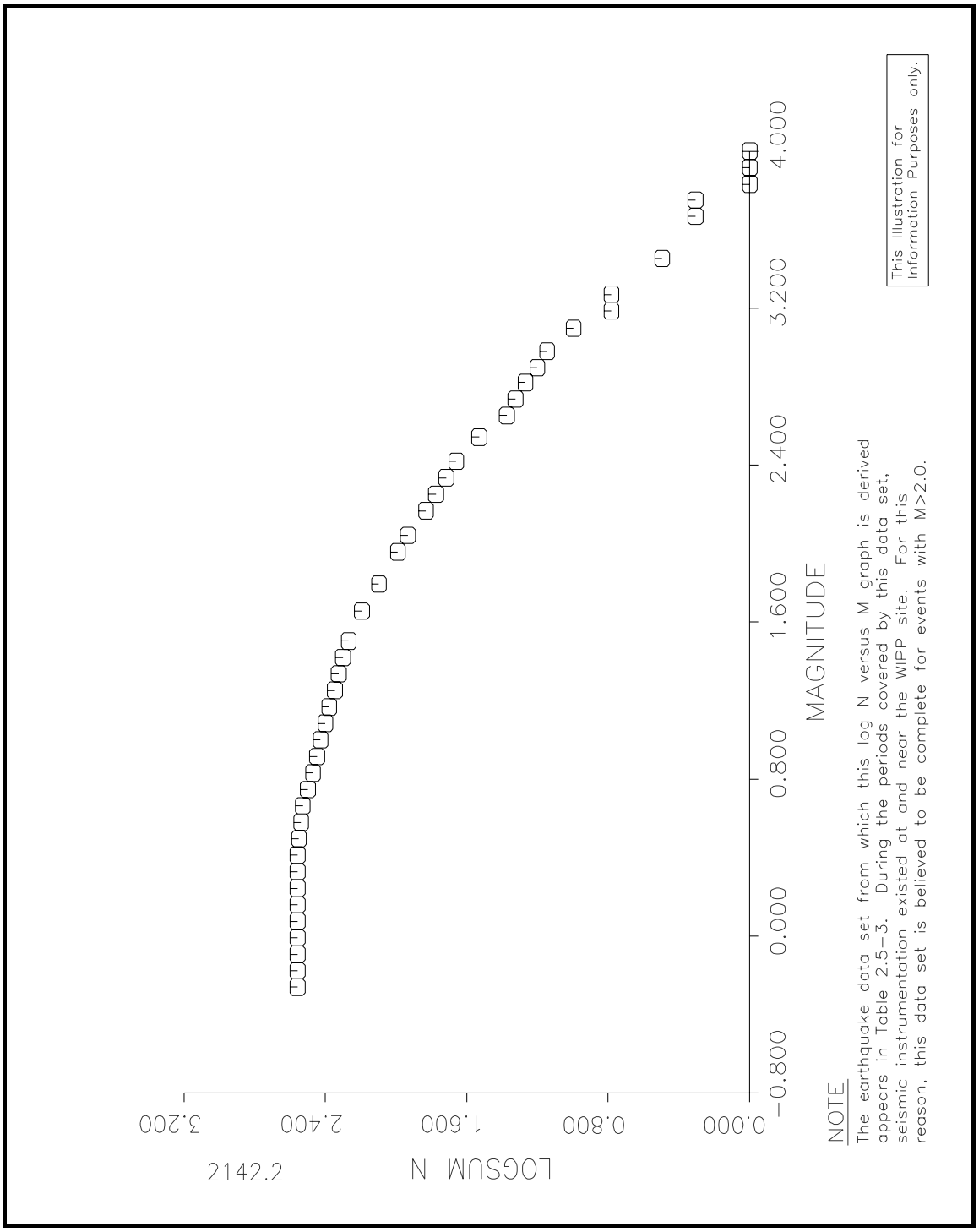

Figure 2.5-7 Earthquake Recurrence Data (Log N versus M): 18 May 1974 through 24 July 1980 and 29 August 1983 through 30 September 1986

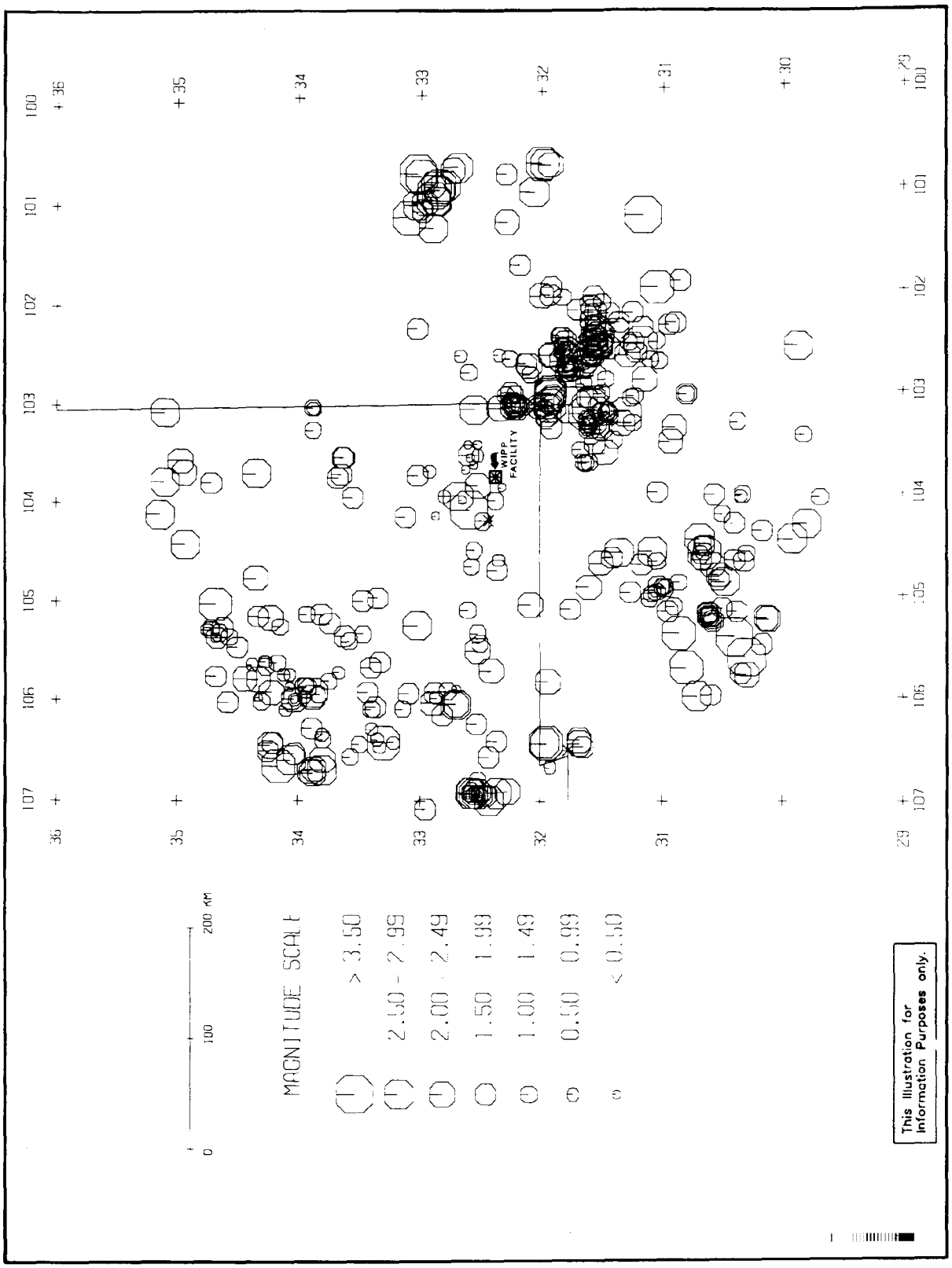

Figure 2.5-8 Epicenters for All Located Earthquakes: 1 January 1962 through 30 September 1986

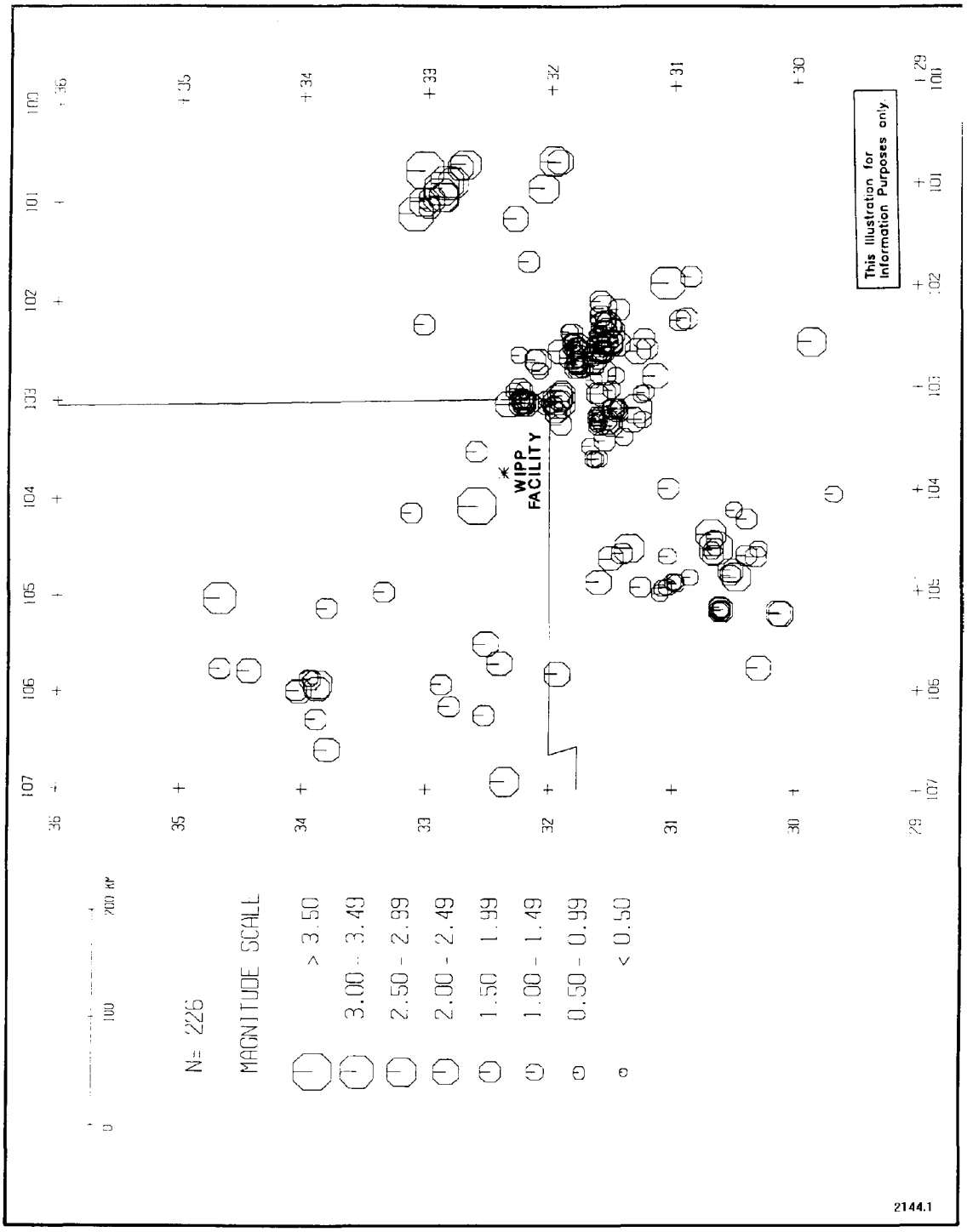

Figure 2.5-9 Epicenters for All Located Earthquakes: 5 April 1974 through 6 October 1978

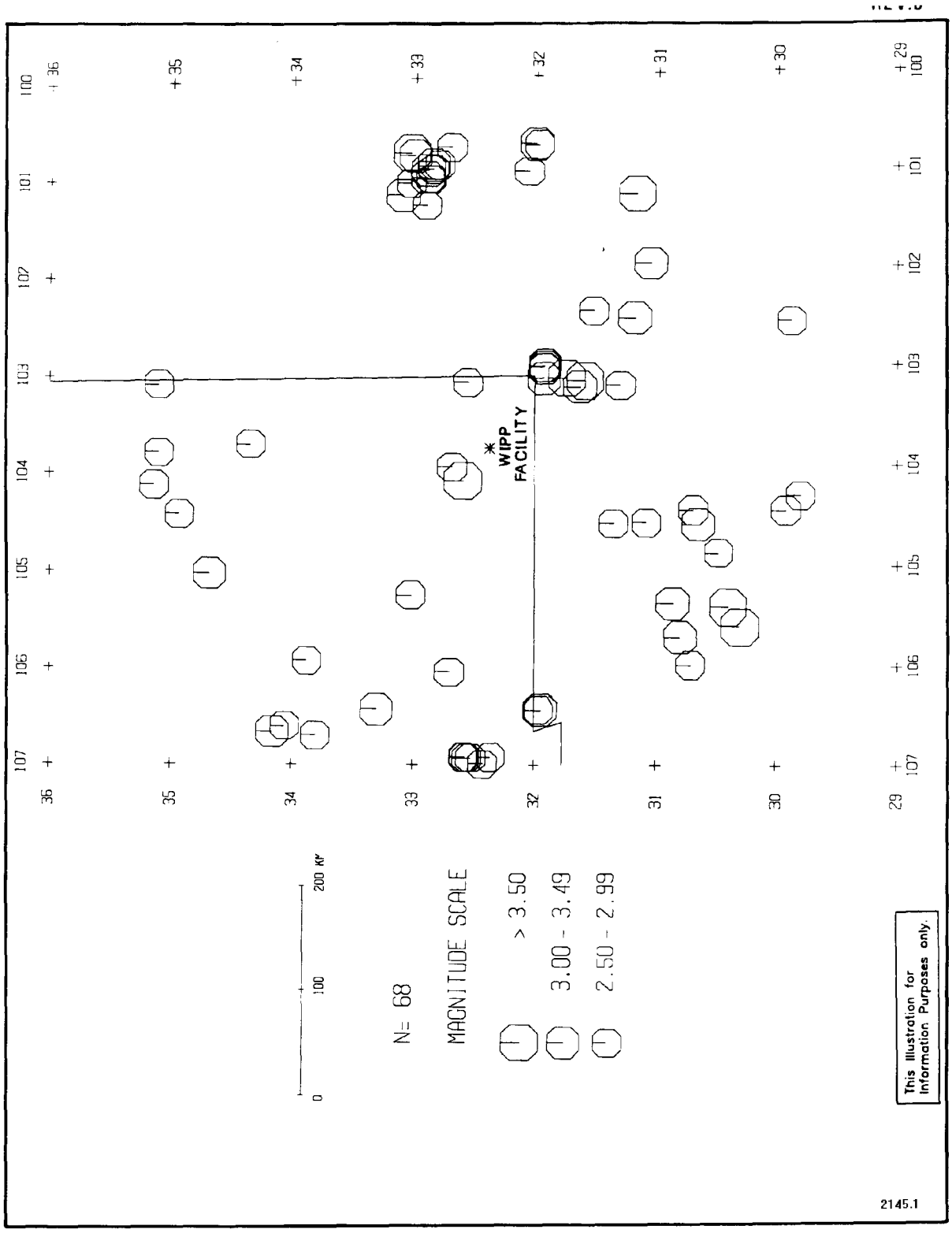

Figure 2.5-10 Epicenters for Located Earthquakes with M≥2.5: 1 January 1962 through 30 September 1986

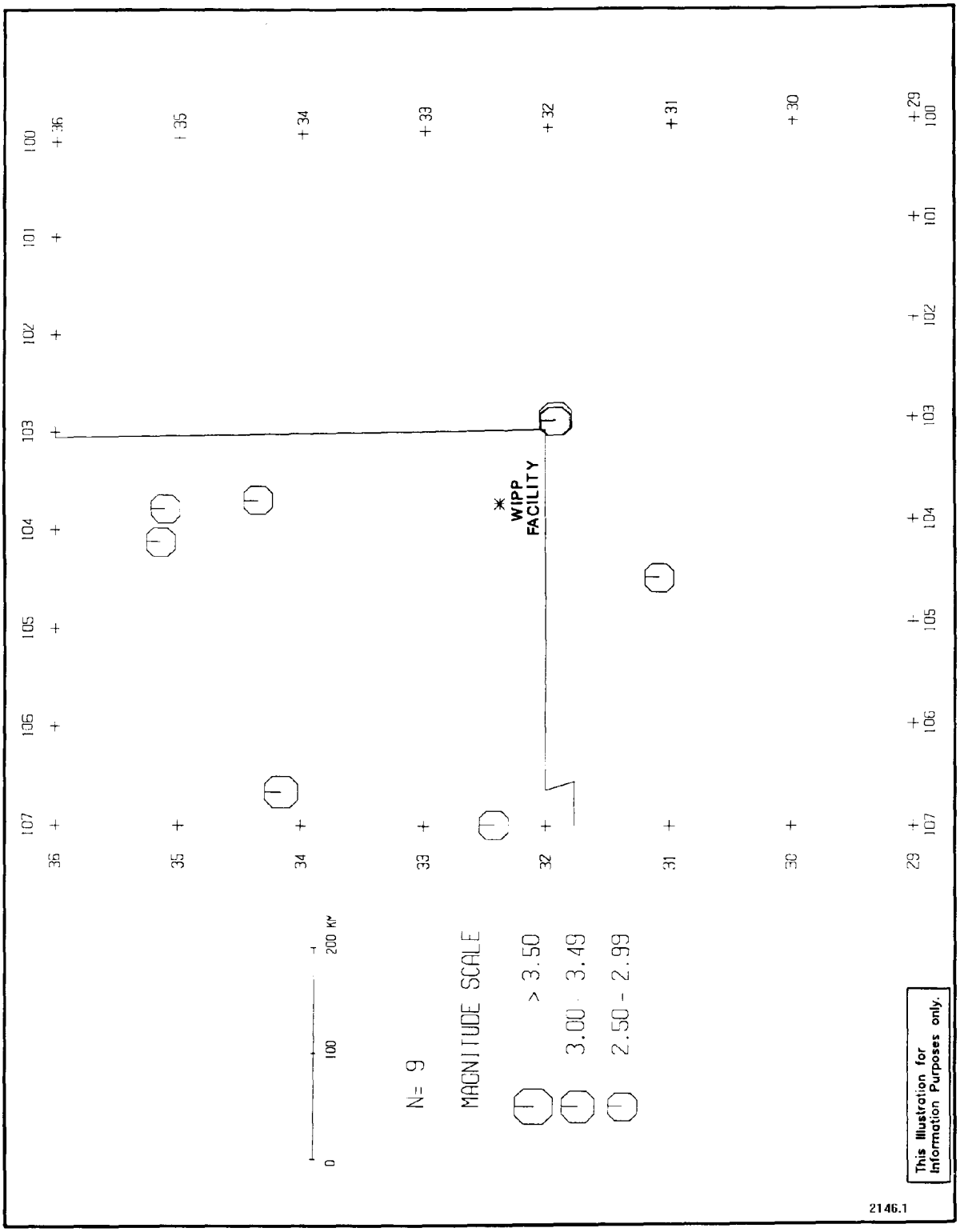

Figure 2.5-11 Epicenters for Located Earthquakes with M≥2.5: 1 January 1962 through 3 February 1965

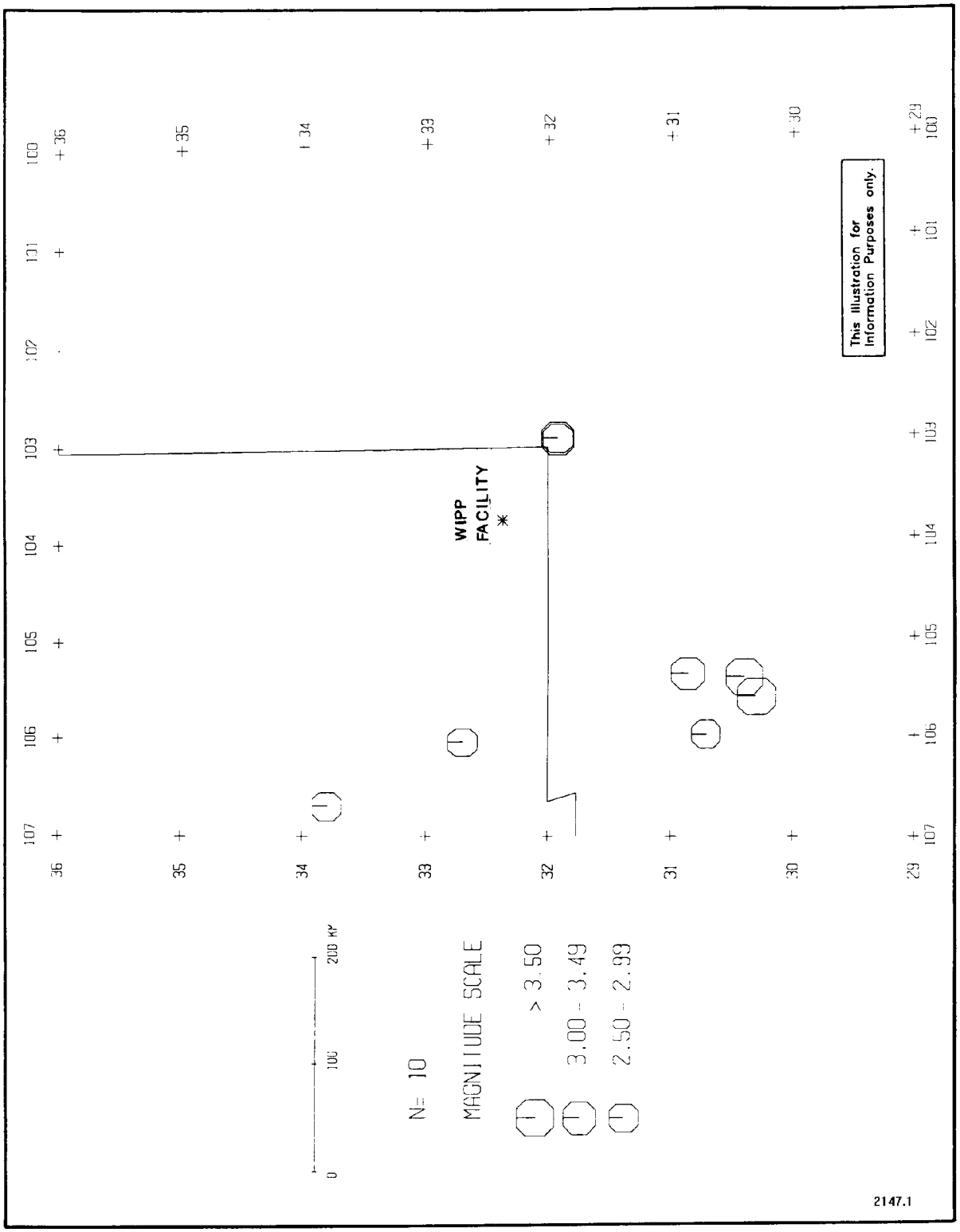

Figure 2.5-12 Epicenters for Located Earthquakes with M ≥ 2.5: 4 February 1965 through 9 March 1968

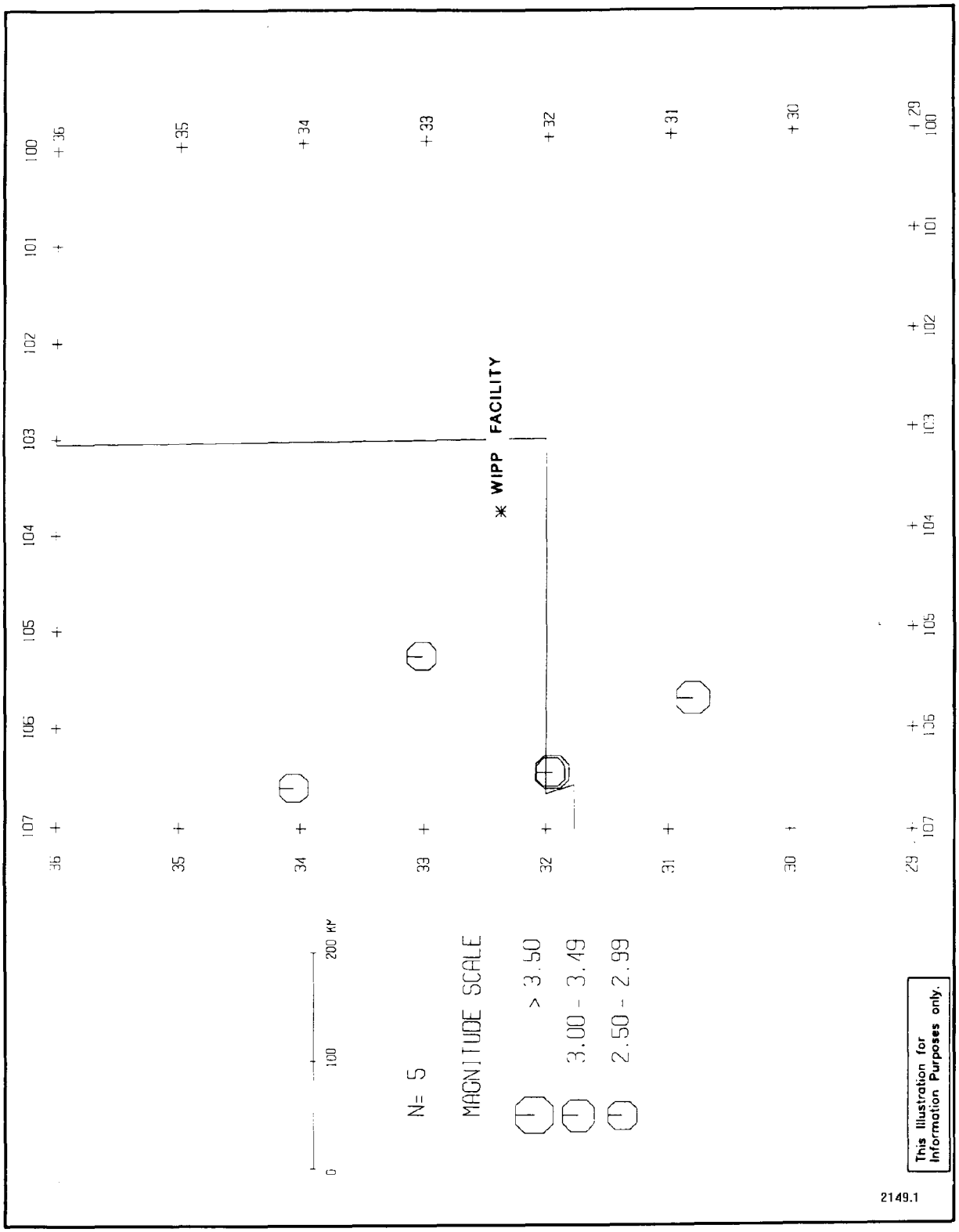

Figure 2.5-13 Epicenters for Located Earthquakes with M ≥ 2.5: 10 March 1968 through 13 April 1971

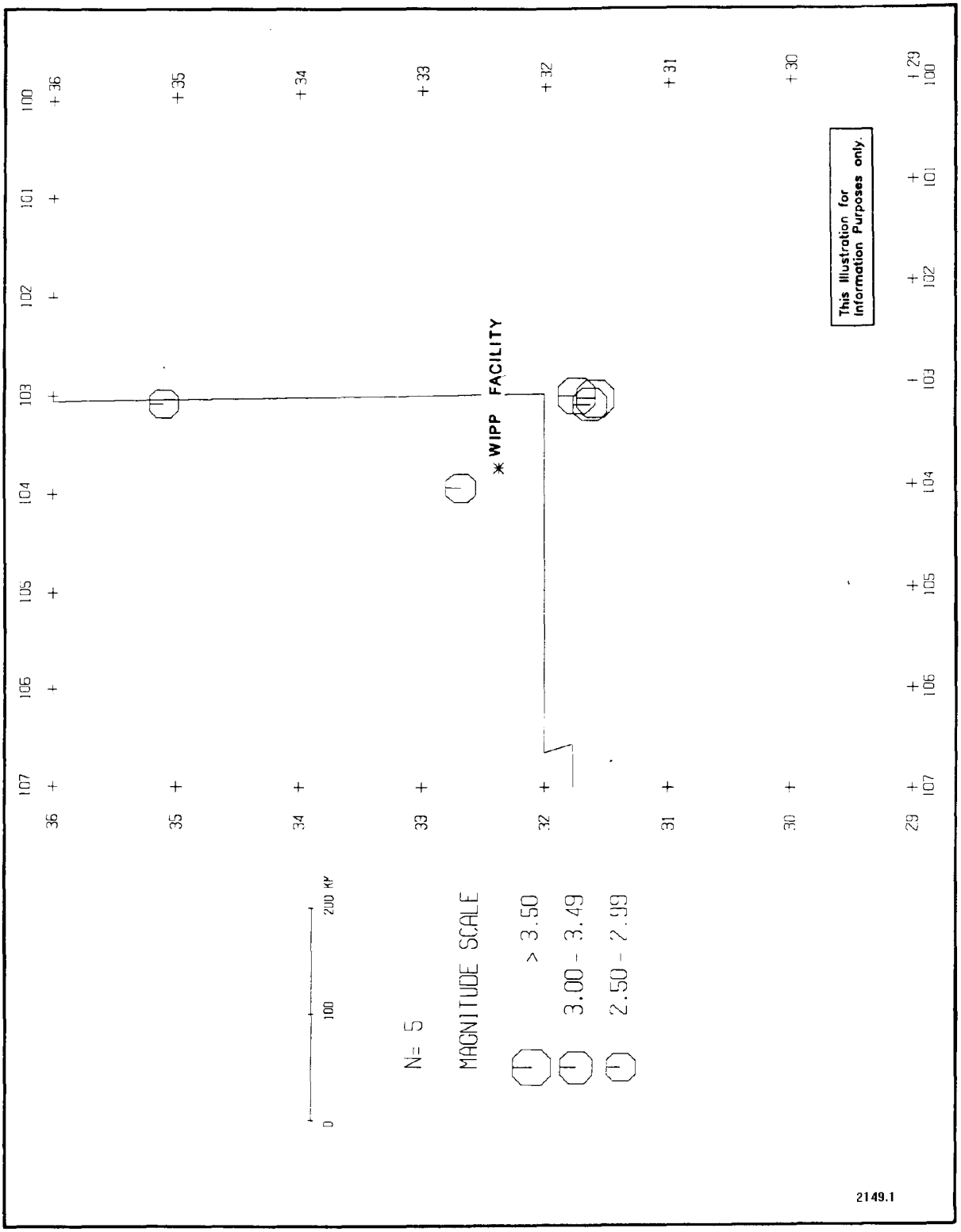

Figure 2.5-14 Epicenters for Located Earthquakes with M≥2.5: 14 April 1971 through 17 May 1974

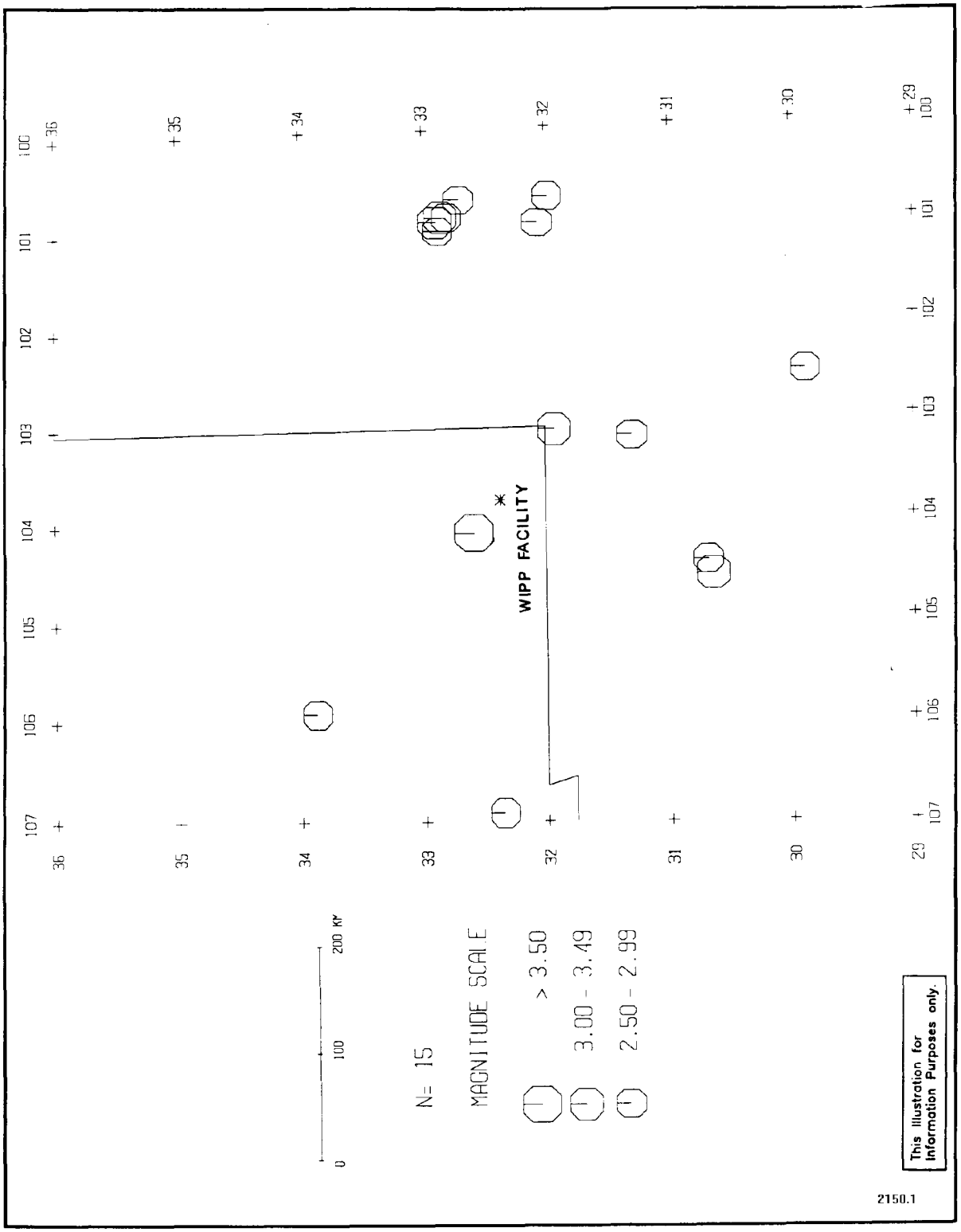

Figure 2.5-15 Epicenters for Located Earthquakes with M ≥ 2.5: 18 May 1974 through June 21, 1977

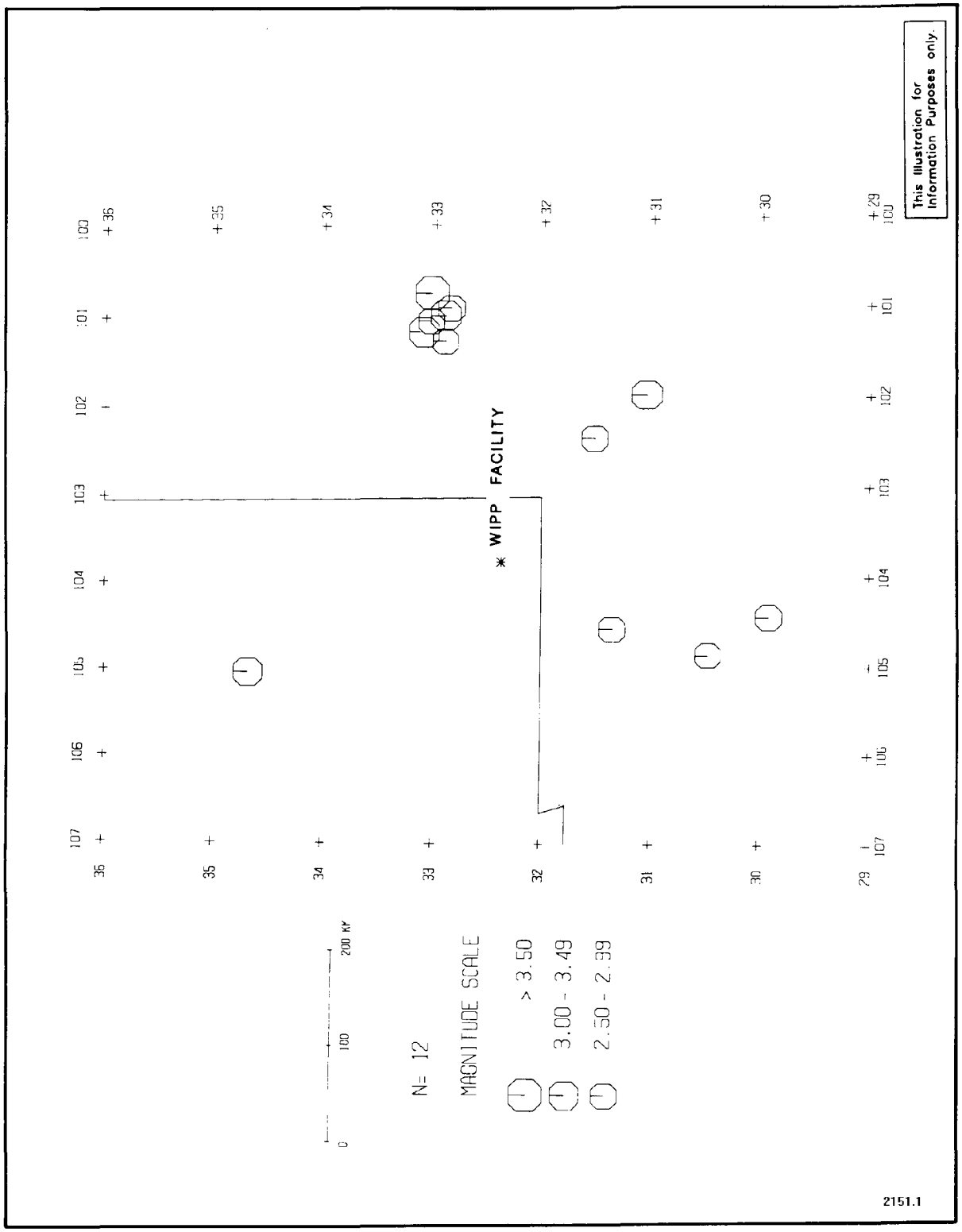

Figure 2.5-16 Epicenters for Located Earthquakes with M≥2.5: 22 June 1977 through 24 July 1980

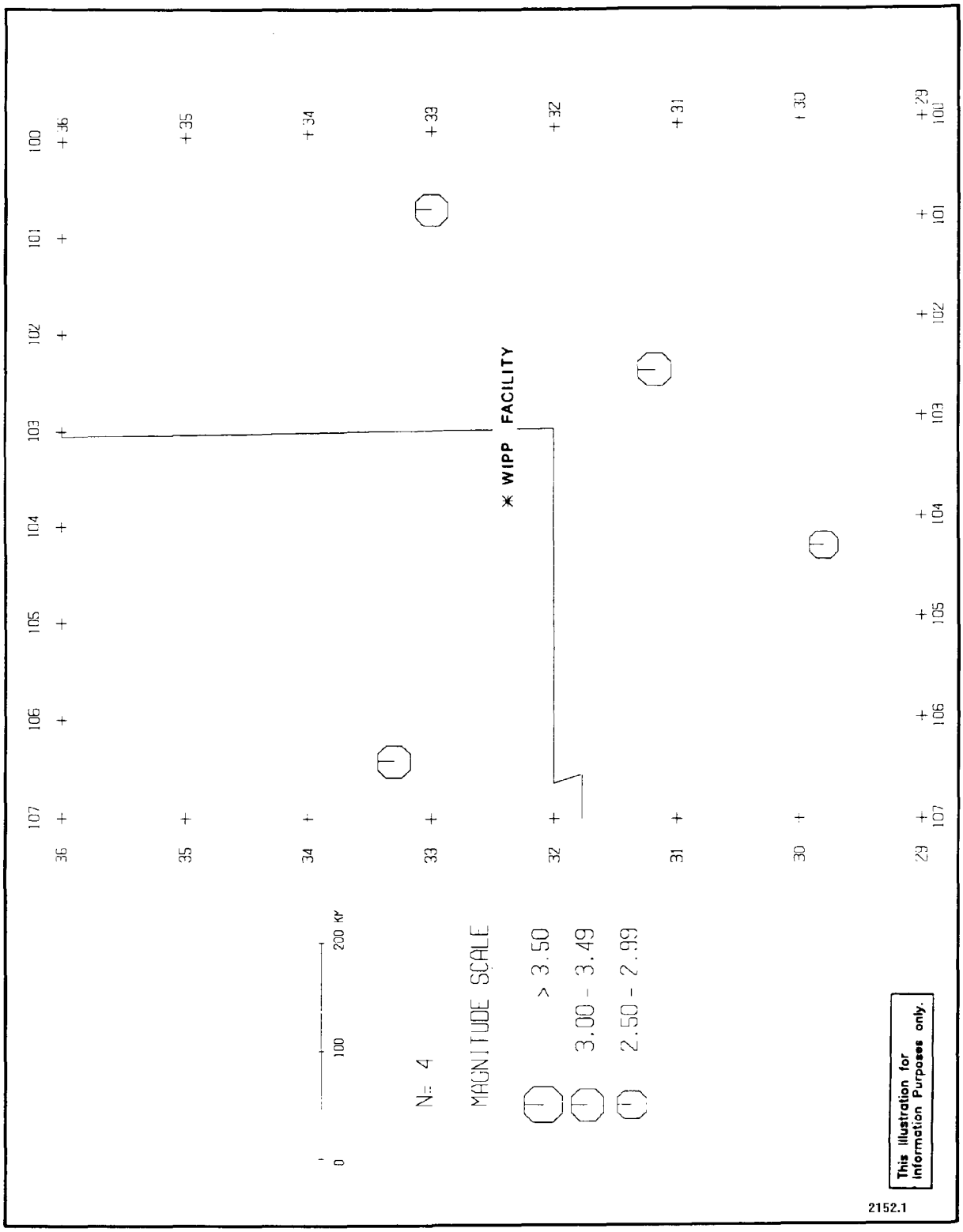

Figure 2.5-17 Epicenters for Located Earthquakes with M ≥ 2.5: 25 July 1980 through 28 August 1983

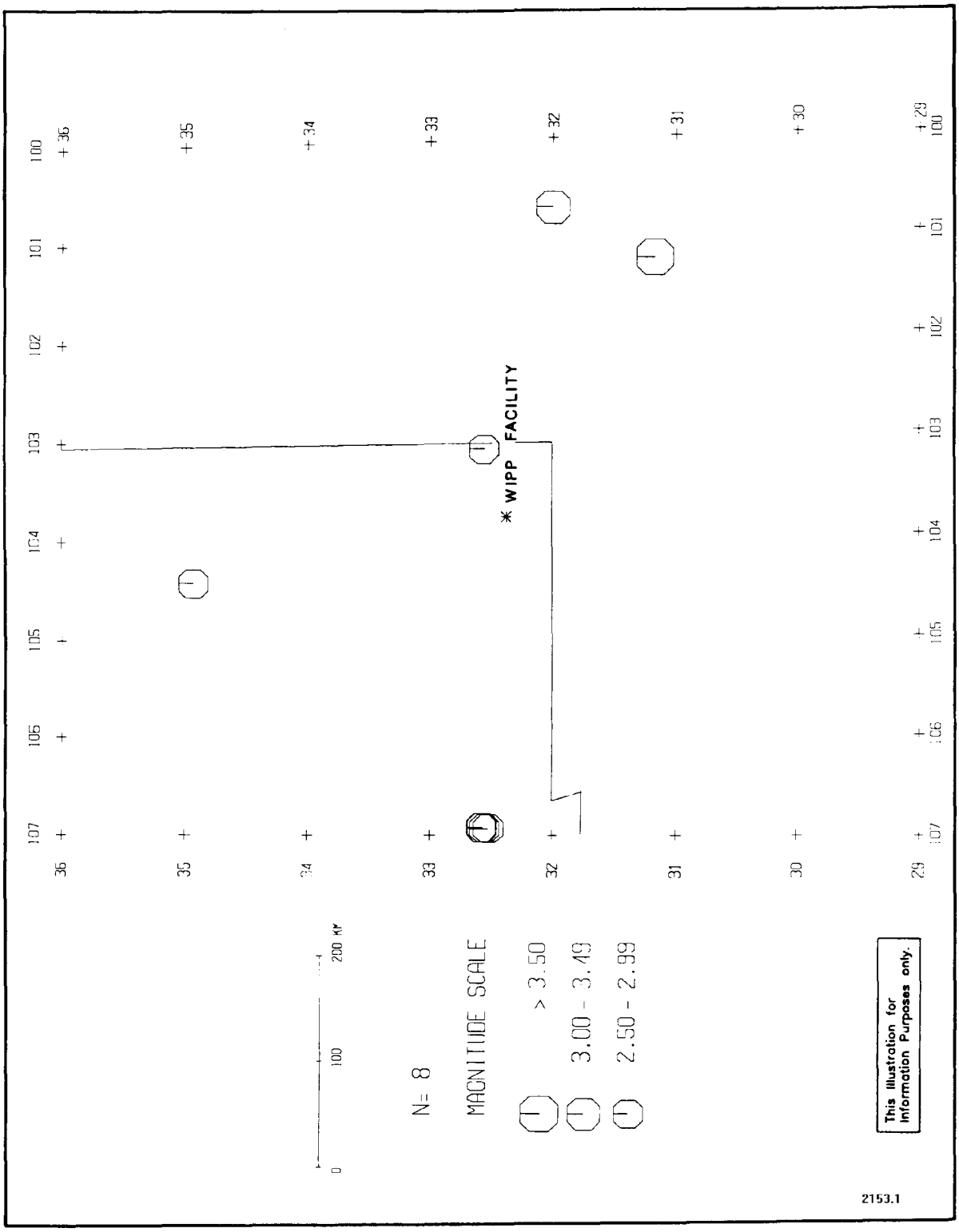

Figure 2.5-18 Epicenters for Located Earthquakes with M≥2.5: 29 August 1983 through 30 September 1986

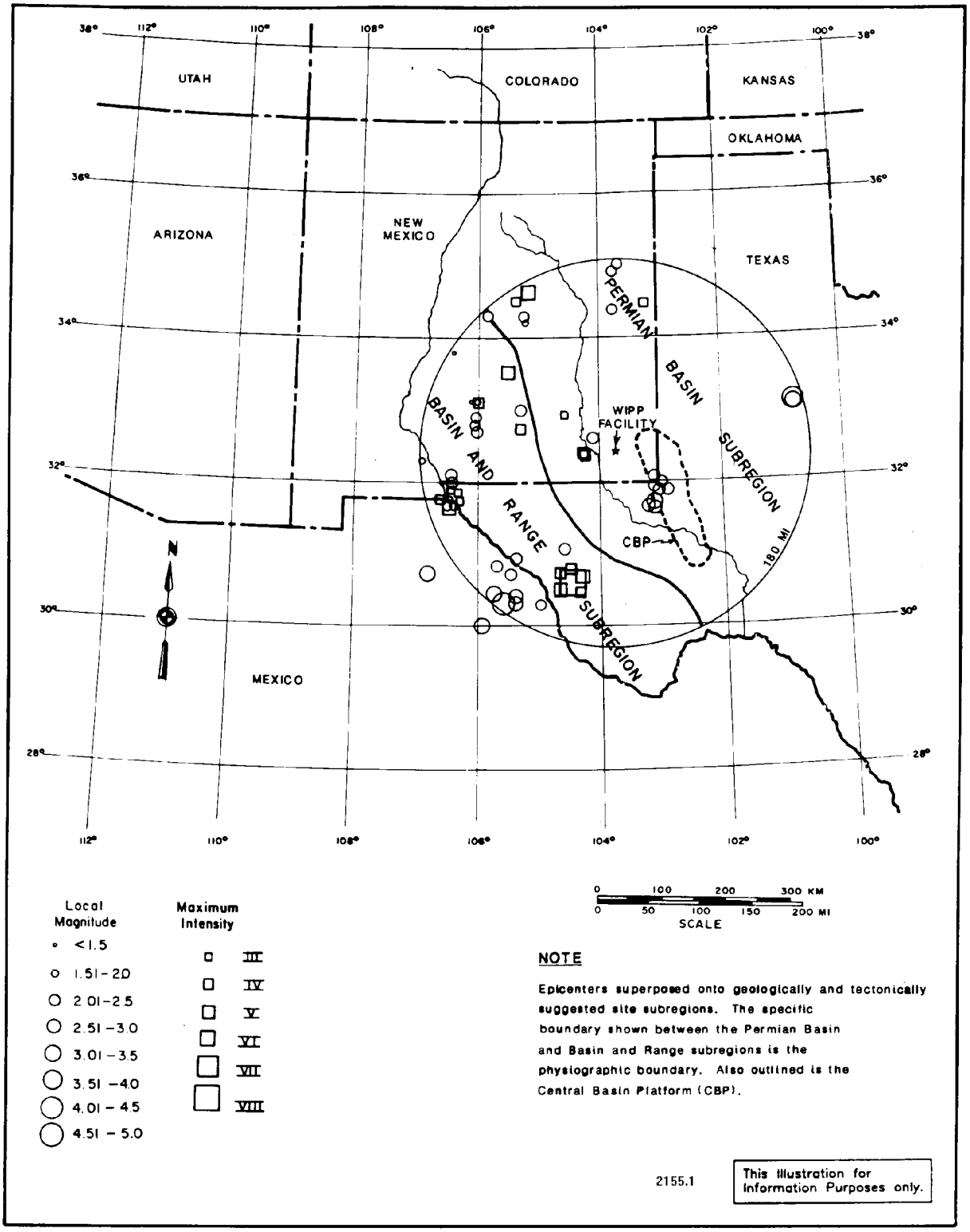

Figure 2.5-19 Earthquakes Located Using Macroseismic or Regional Seismographic Data 1923 - 1977 and Suggested Site Subregions

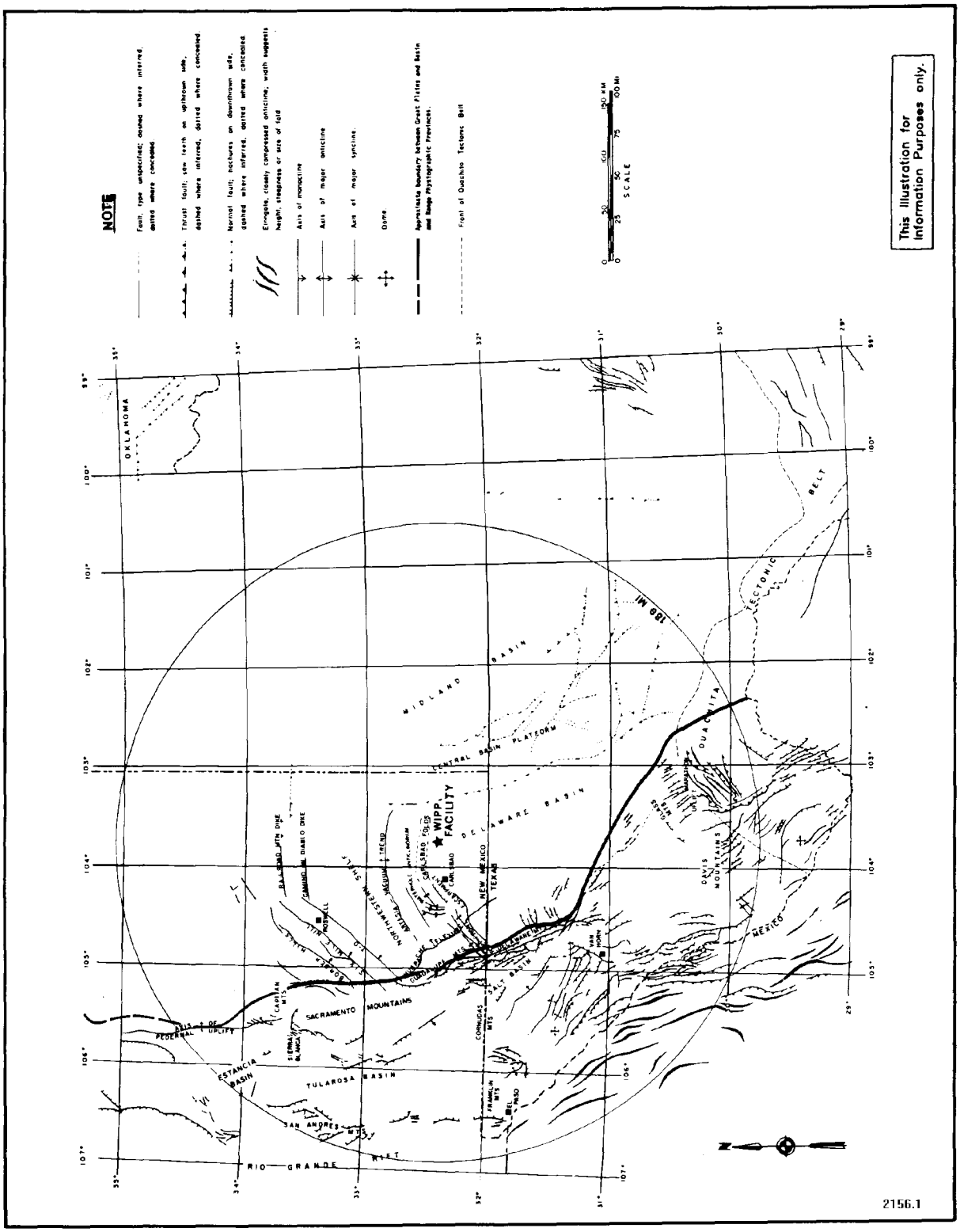

Figure 2.5-20 Site Region Structural Features and the Great Plains-Basin and Range Physiographic Boundary

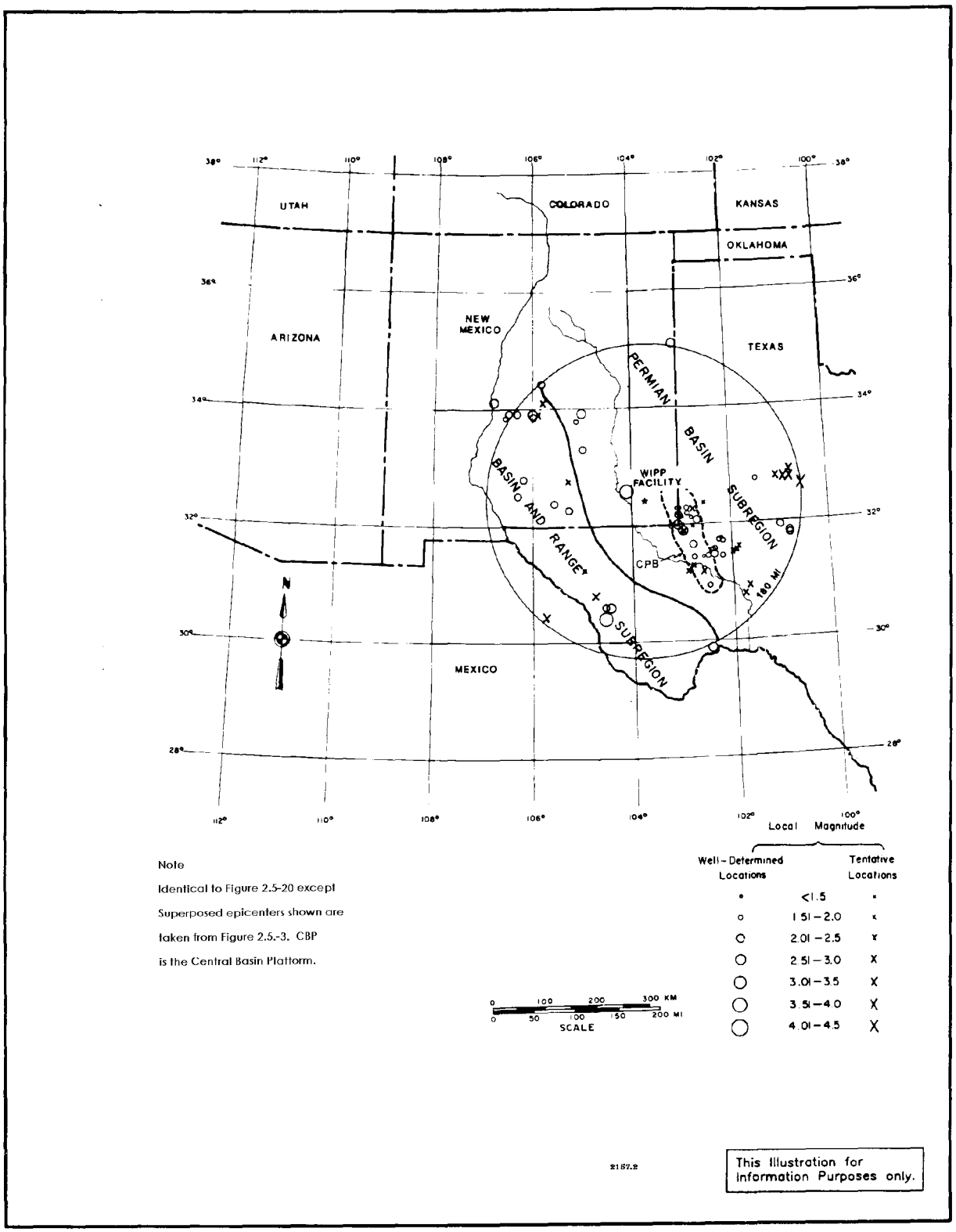

Figure 2.5-21 Earthquakes Located with the Help of Data from Station CLN and Suggested Site Subregions

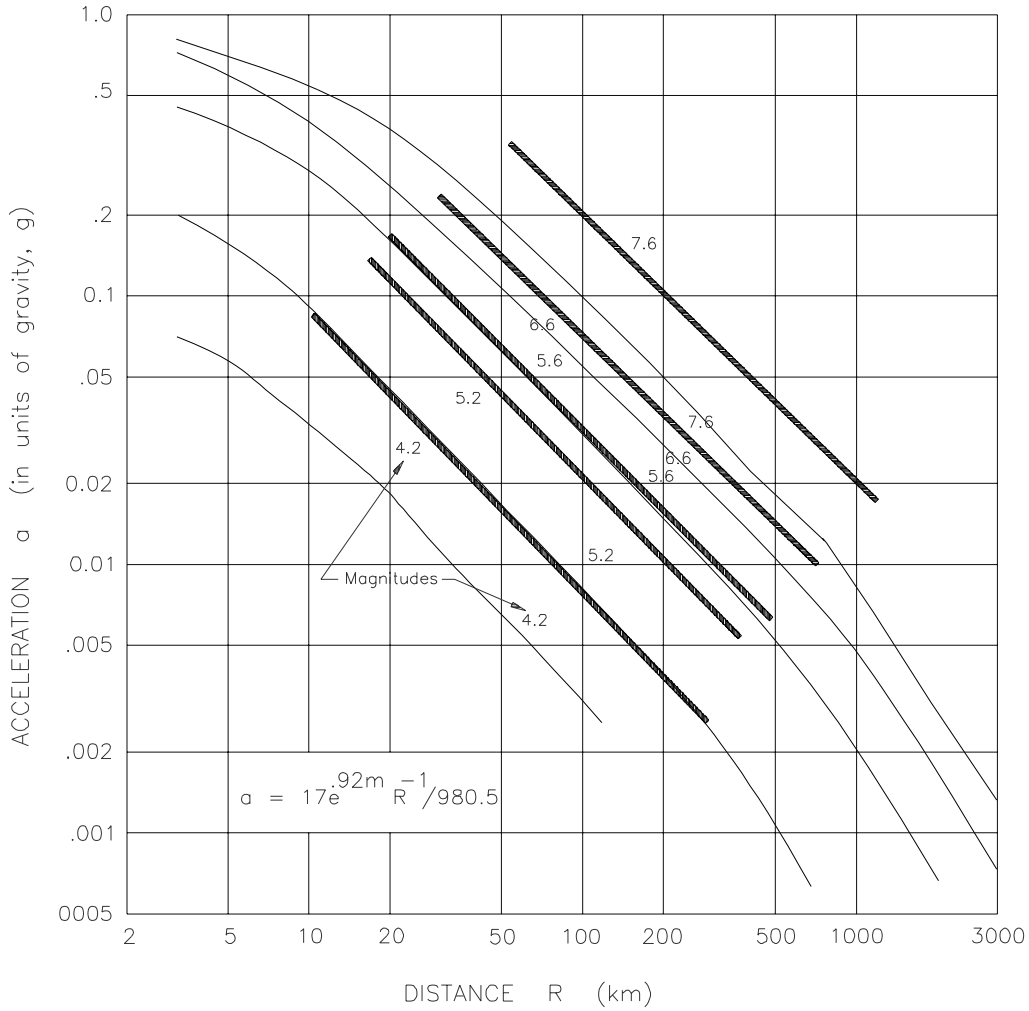

NOTE

Comparison of acceleration attenuation curves for various magnitudes for areas of the United States east of 105°W longitude after Algermissen and Perkins[29] (light lines) with those used in the site hazard analysis of this report (heavy lines). The equation for the recommended attenuation curves is shown in the inset.

This illustration for Information Purposes Only

2158.2

Figure 2.5-22 Recommended Attenuation Curves

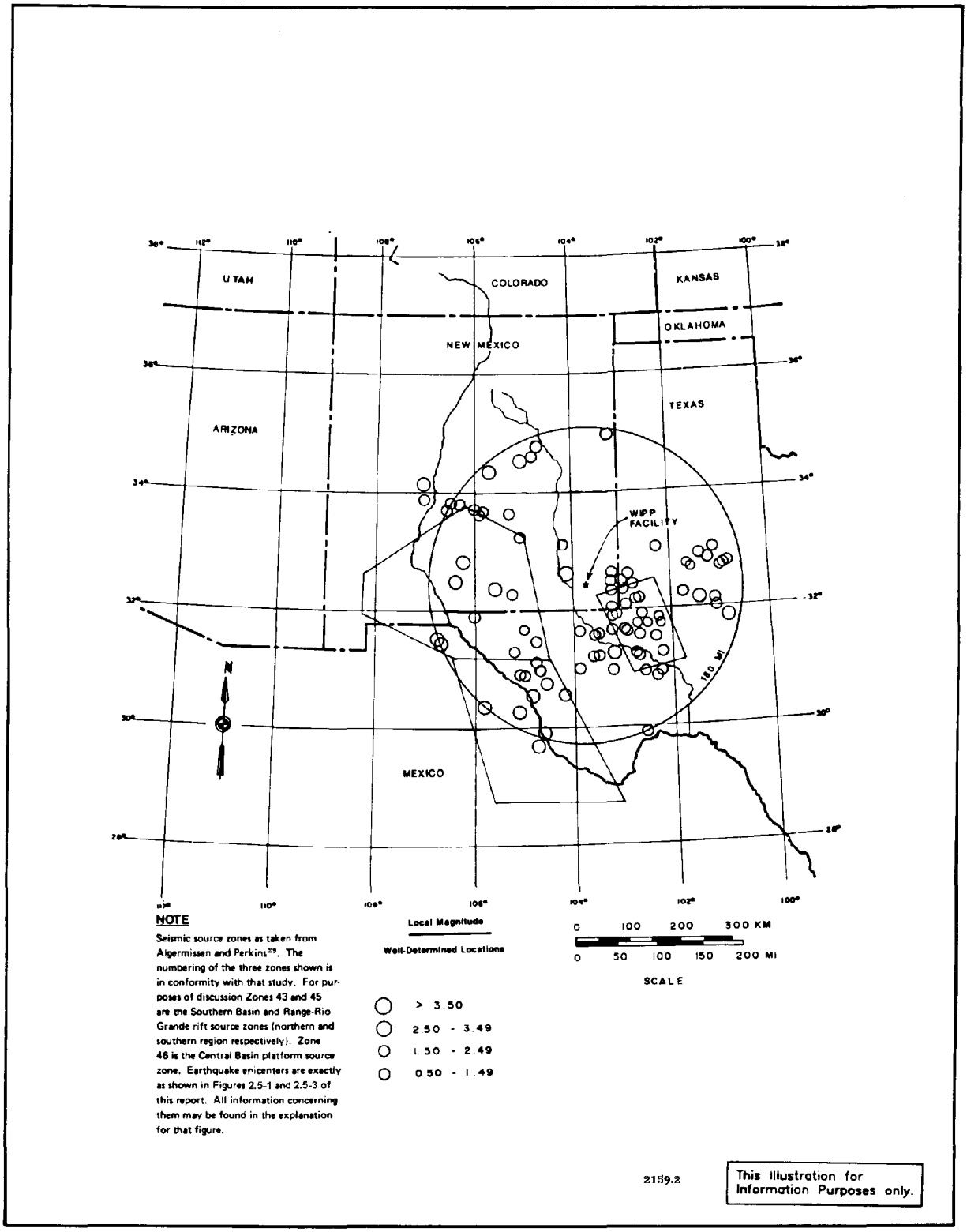

Figure 2.5-23 Algermissen and Perkins Seismic Source Zones

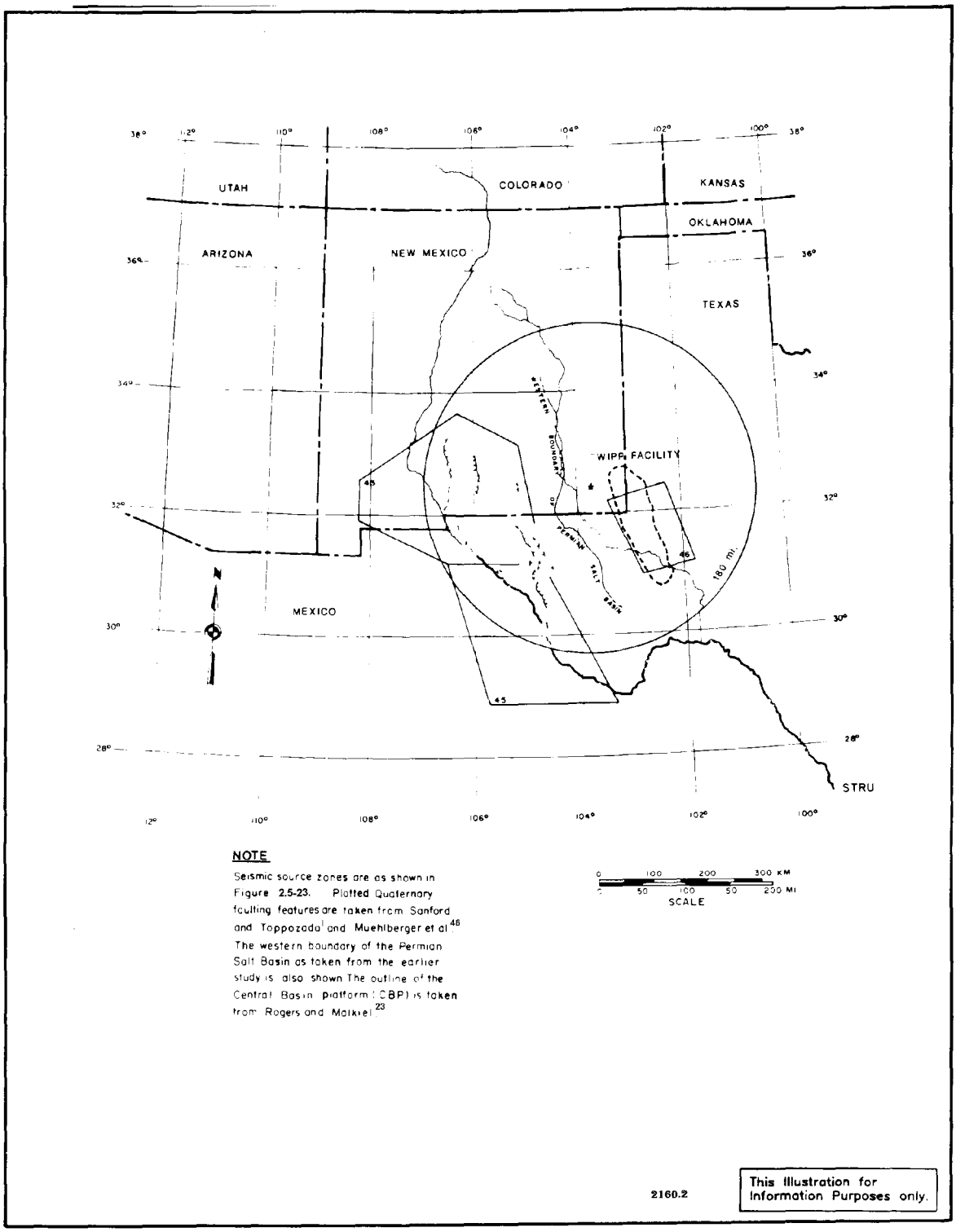

Figure 2.5-24 Structural Features in the WIPP Site Region

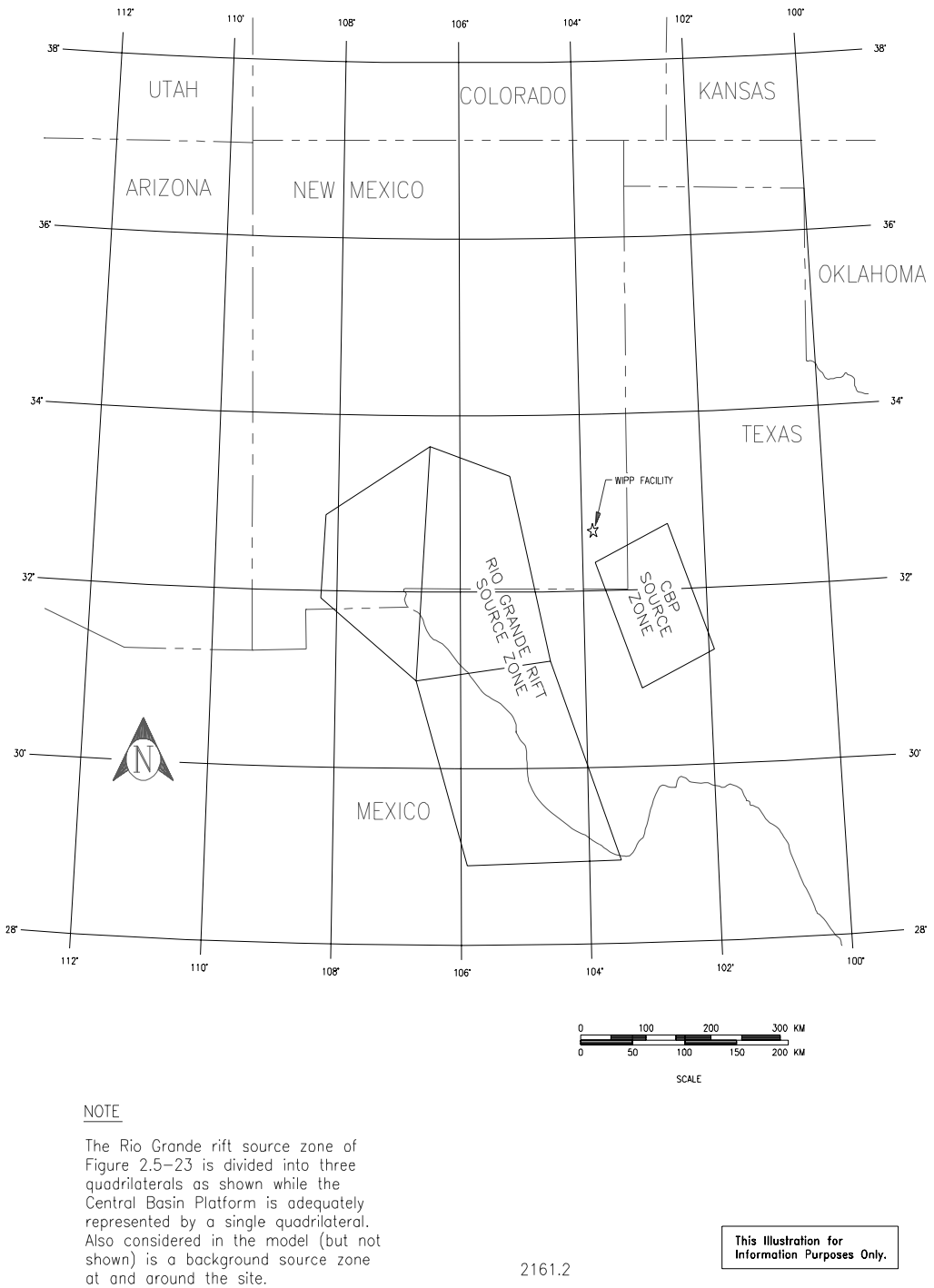

NOTE

The Rio Grande rift source zone of Figure 2.5–23 is divided into three quadrilaterals as shown while the Central Basin Platform is adequately represented by a single quadrilateral. Also considered in the model (but not shown) is a background source zone at and around the site.

2161.2

This Illustration for Information Purposes Only.

Figure 2.5-25 Quadrilateral Representation of Algermissen and Perkins Source Zones

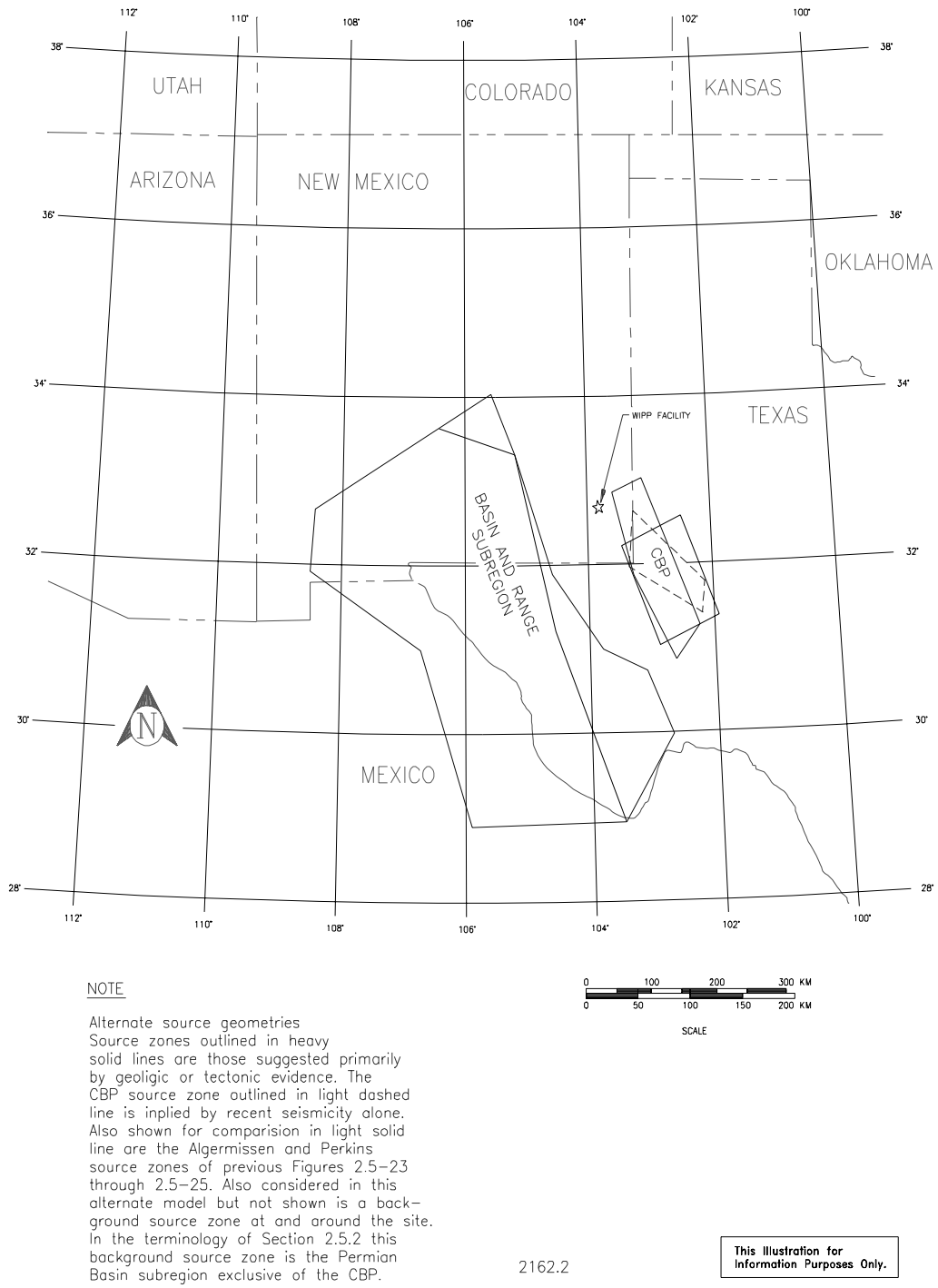

NOTE

Alternate source geometries
Source zones outlined in heavy solid lines are those suggested primarily by geoligic or tectonic evidence. The CBP source zone outlined in light dashed line is inplied by recent seismicity alone. Also shown for comparision in light solid line are the Algermissen and Perkins source zones of previous Figures 2.5–23 through 2.5–25. Also considered in this alternate model but not shown is a back–ground source zone at and around the site. In the terminology of Section 2.5.2 this background source zone is the Permian Basin subregion exclusive of the CBP.

2162.2

This Illustration for Information Purposes Only.

Figure 2.5-26 Alternate Source Geometries

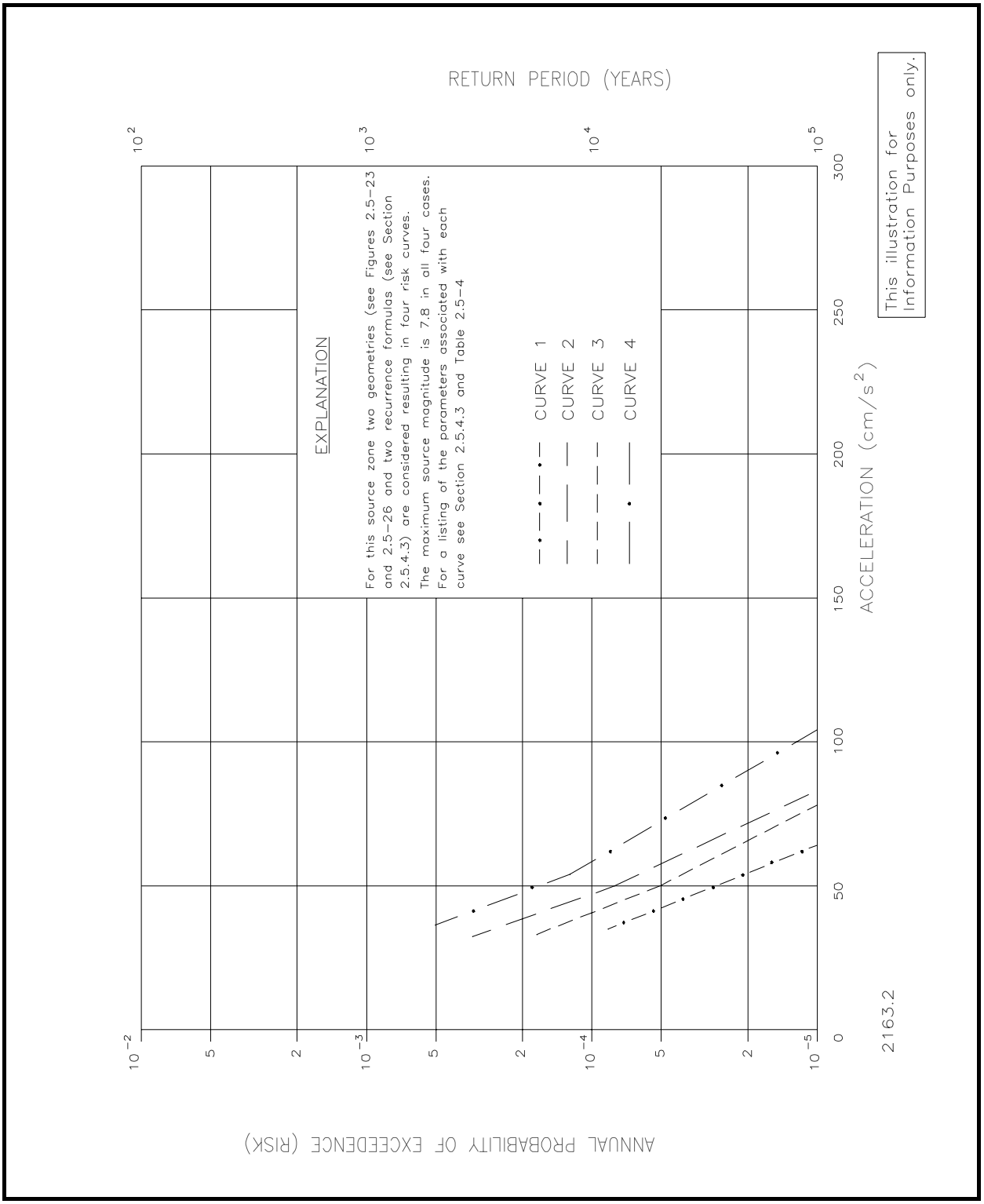

Figure 2.5-27 Risk Curves from Basin and Range or Rio Grande Rift Seismicity

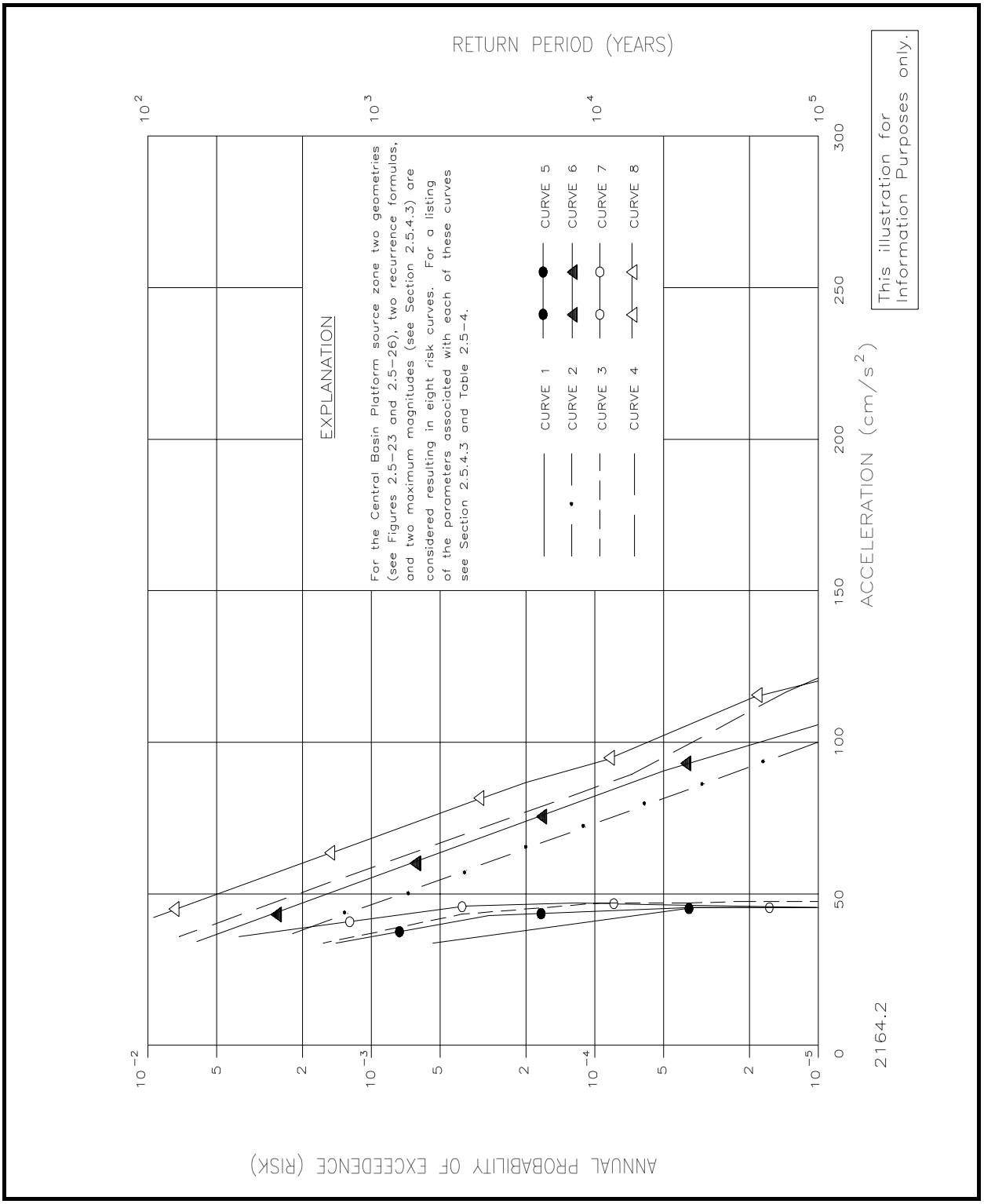

Figure 2.5-28 Risk Curves from Central Basin Platform Seismicity

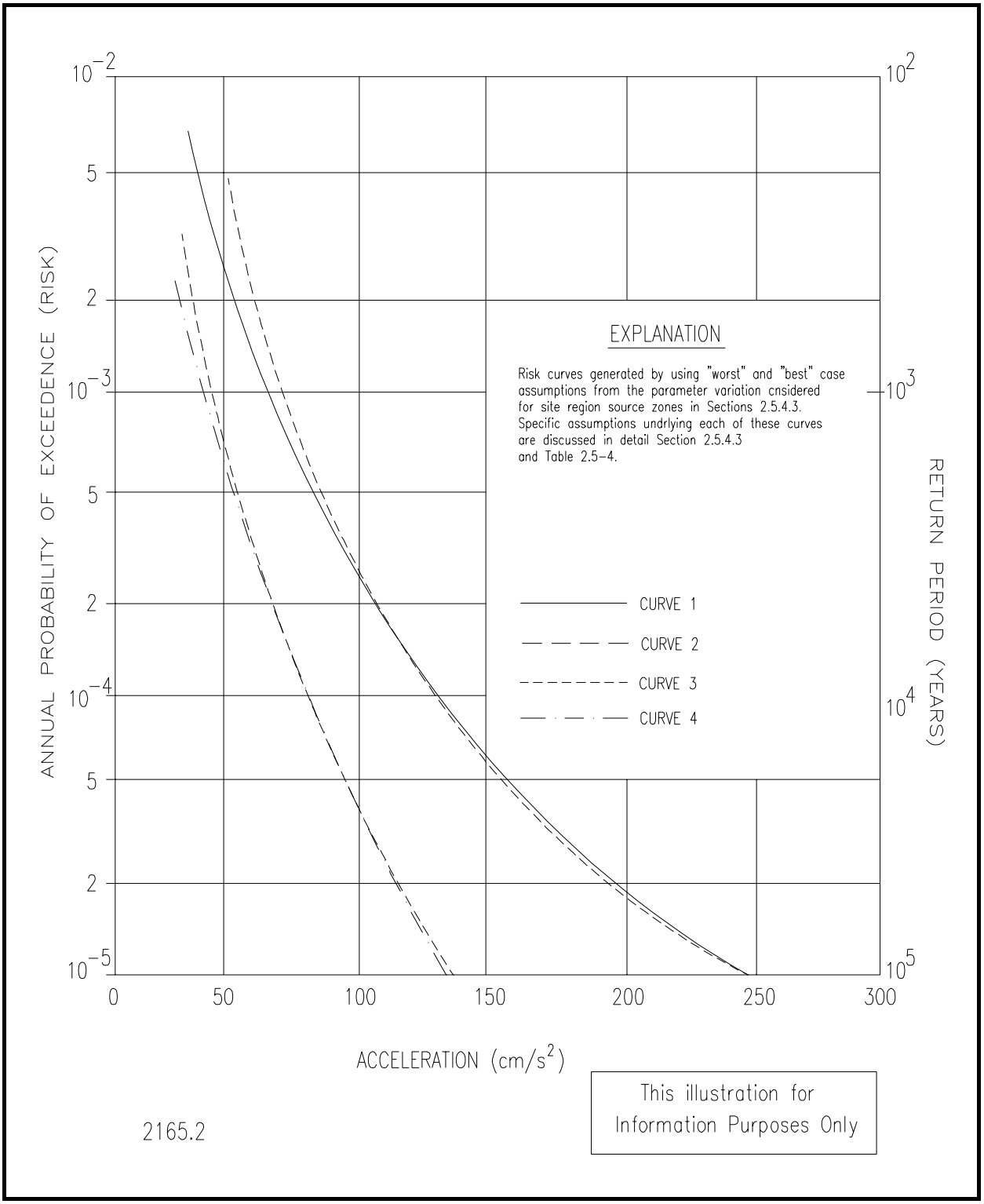

Figure 2.5-29 Risk Curves from WIPP Facility Source Zone Seismicity

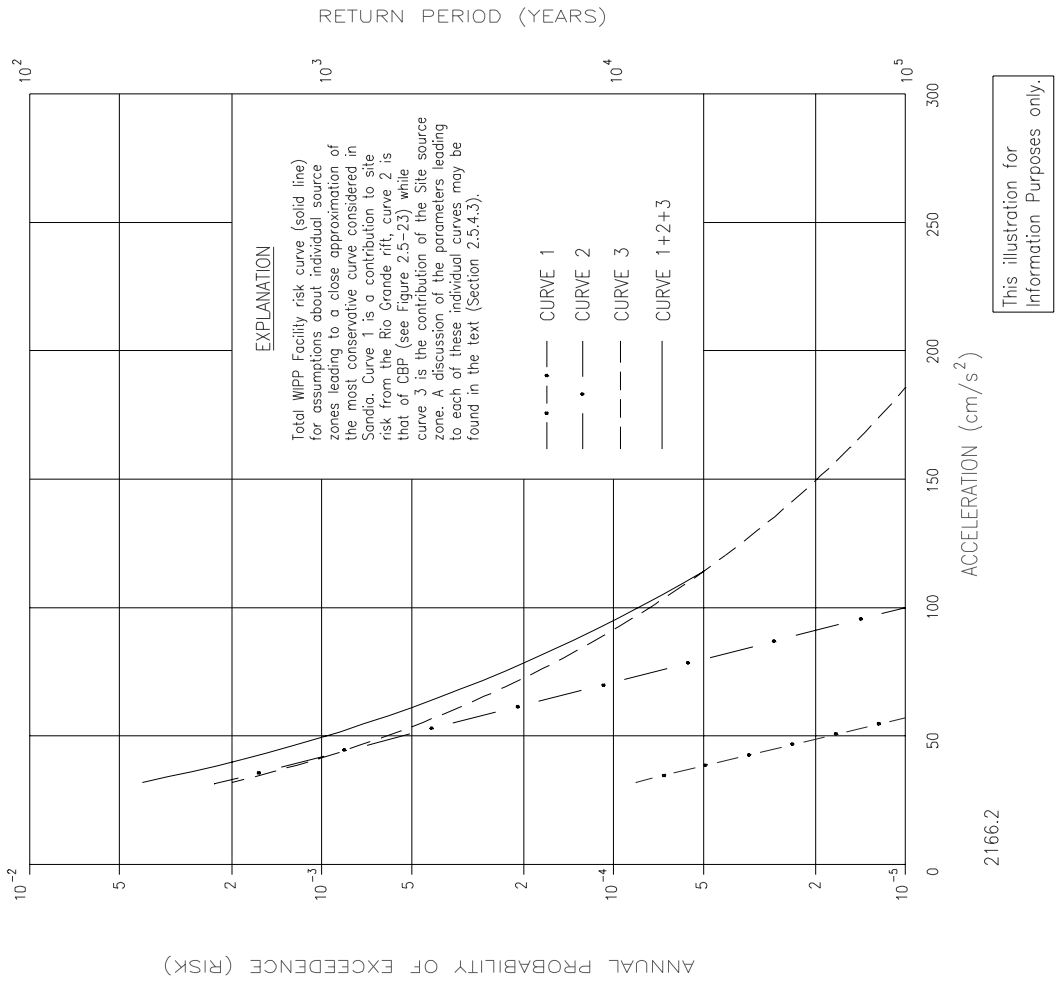

Figure 2.5-30 Generation of Total WIPP Facility Seismic Risk Curve Individual Source Risk Curves

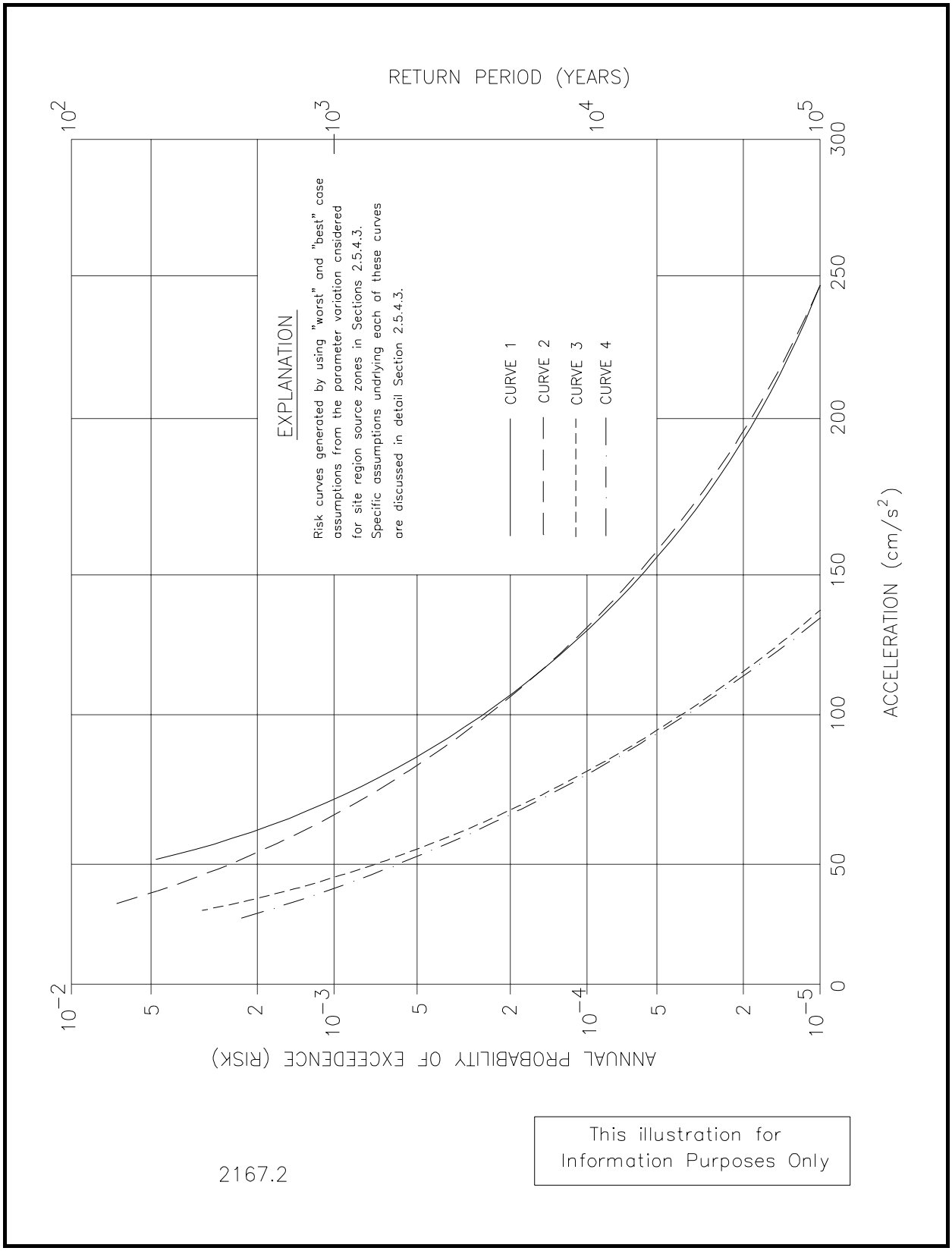

Figure 2.5-31 Total WIPP Facility Risk Curve Extrema

Table 2.5-1 Earthquakes Occurring Before 1962 and Centered Within 300 Km of the WIPP Facility*

Date Yr/Mo/Day	Origin, Time, GMT	Location	Intensity	Distance
23/03/07	04:03	El Paso, Tex.	V	260
26/07/17	22:00	Hope and Lake Arthur, N.M.	III	90
30/10/04	03:25	34.5°N 105°W	(IV)	280
31/08/16	11:40	Valentine, Tex.	VIII	210
31/08/16	19:33	Valentine, Tex.	(V)	210
31/08/18	19:36	Valentine, Tex.	V	210
31/08/19	01:36	Valentine, Tex.	(V)	210
31/10/02	?	El Paso, Tex.	(III)	260
31/11/03	14:50	29.9°N 104.2°W	(V)	295
35/12/20	05:30	34.4°N 103.2°W	III-IV	230
36/01/08	06:46	Carlsbad, N.M.	(IV)	40
36/08/08	01:40	El Paso, Tex.	(III)	260
36/10/15	18:00	El Paso, Tex.	(III)	260
37/03/31	22:45	El Paso, Tex.	(IV)	260
37/09/30	06:15	Ft. Stanton, N.M.	(V)	200
43/12/27	04:00	Tularosa, N.M.	IV	220
49/02/02	23:00	Carlsbad, N.M.	(IV)	40
49/05/23	07:22	34.6°N 105.2°W	VI	280
52/05/22	04:20	Dog Canyon, N.M.	IV	158
55/01/27	00:37	Valentine, Tex.	IV	210

* A.R. Sandord and T.R. Toppozada, "Seismicity of Proposed Radio- active Waste Isolation Disposal Site in Southeastern New Mexico," New Mexico Bureau of Mines and Mineral Resources, Circ. 143, pp. -15 (1974).

Table 2.5-2 Modified Mercalli Intensity Scale of 1931*

(Abridged)

I. Not felt except by a very few under especially favorable circumstances. (I Rossi-Forel scale.)

II. Felt only by a few persons at rest, especially on upper floors of buildings. Delicately suspended objects may swing. (I to II Rossi-Forel scale.)

III. Felt quite noticeably indoors, especially on upper floors of buildings, but many people do not recognize it as an earthquake. Standing motor cars may rock slightly. Vibration like passing of truck. Duration estimated. (III Rossi-Forel scale.)

IV. During the day felt indoors by many, outdoors by few. At night some awakened. Dishes, windows, doors disturbed; walls make cracking sound. Sensation like heavy truck striking building. Standing motor cars rock noticeably. (IV to V Rossi-Forel scale.)

V. Felt by nearly everyone; many awakened. Some dishes, windows, etc., broken; a few instances of cracked plaster; unstable objects overturned. Disturbance of trees, poles and other tall objects sometimes noticed. Pendulum clocks may stop. (V to VI Rossi-Forel scale.)

VI. Felt by all; many frightened and run outdoors. Some heavy furniture moved; a few instances of fallen plaster or damaged chimneys. Damage slight. (VI to VII Rossi-Forel scale.)

VII. Everybody runs outdoors. Damage negligible in buildings of good design and construction; slight to moderate in well-built ordinary structures; considerable in poorly built or badly designed structures; some chimneys broken. Noticed by persons driving motor cars. (VIII Rossi-Forel scale.)

VIII. Damage slight in specially designed structures; considerable in ordinary substantial buildings with partial collapse; great in poorly built structures. Panel walls thrown out of frame structures.

Fall of chimneys, factory stacks, columns, monuments, walls. Heavy furniture overturned. Sand and mud ejected in small amounts. Changes in well water. Disturbs persons driving motor cars. (VIII+ to IX Rossi-Forel scale.)

IX. Damage considerable in specially designed structures; well-designed frame structures thrown out of plumb; great in substantial buildings with partial collapse. Buildings shifted off foundations. Ground cracked conspicuously. Underground pipes broken. (IX Rossi-Forel scale.)

X. Some well-built wooden structures destroyed; most masonry and frame structures destroyed with foundations; ground badly cracked. Rails bent. Landslides considerable from river banks and steep slopes. Shifted sand and mud. Water splashed (slopped) over banks. (X Rossi-Forel scale.)

XI. Few, if any, (masonry) structures remain standing. Bridges destroyed, broad fissures in ground. Underground pipe lines completely out of service. Earth slumps and land slips in soft ground. Rails bent greatly.

XII. Damage total. Waves seen on ground surfaces. Lines of sight and level distorted. Objects thrown upward into the air.

---

* H.O. Wood and F. Neumann, "Modified Mercalli Intensity Scale of 1931," Seismal. Soc. Am. Bull., 21, pp. 277-283 (1931).

Table 2.5-3 Instrumental Origin Times, Locations and Magnitudes of Earthquakes Within 180 Mi of the WIPP Facility January 1, 1962 Through September 30, 1986 *

Date	Origin Time	Epicenter			Located By					Mag.
Yr/Mo/Da	GMT Lat.	Long. North	West	N	UMT	LSGS	AANL	USL	UTA	TEP
62 03 03	18:16:48.1	33.80	106.40		X					1.2
62 03 06	09:59:09.7	31.08	104.55		X					2.9
62 03 22	04:23:53.4	34.25	106.51		X					1.7
62 04 09	23:42:58.0	34.21	106.44		X					1.8
62 09 01	16:15:07.9	34.16	106.66		X					3.0
63 02 22	07:02:08.1	32.42	106.99		X					2.5
63 02 22	08:53:18.1	32.45	106.94		X					1.5
63 03 08	06:16:40.0	32.95	107.08		X					1.6
63 06 02	05:07:34.6	34.23	106.46		X					2.0
63 12 19	16:47:28.4	35.14	104.13		X					2.9
63 12 30	08:48:14.6	34.03	106.54		X					1.7
64 02 11	09:24:31.0	34.35	103.73		X					2.5
64 03 03	01:26:26.6	34.97	103.59		X					2.2
64 06 18	20:20:18.5	33.14	106.10		X					1.2
64 06 19	05:28:38.8	33.09	105.95		X					1.7
64 11 08	09:26:00.5	31.93	102.98		X					2.9
64 11 21	11:21:23.8	31.92	102.98		X					2.6
65 02 03	11:32:34.4	35.10	103.80		X					2.9
65 02 03	19:59:32.4	31.92	102.96		X					3.2
65 05 27	18:50:53.9	33.88	106.73		X					2.0
65 05 27	18:58:40.9	33.90	106.71		X					2.0
65 05 29	13:01:08.2	33.87	106.69		X					2.0
65 07 28	03:52:07.4	33.80	106.70		X					2.6
65 08 30	05:17:29.8	31.92	102.98		X					2.7
66 08 14	15:25:47.1	31.92	102.98		X					3.1
66 08 17	18:47:21.0	30.71	105.98		X					2.9
66 08 19	04:15:44.6	30.30	105.60			X				4.8
66 08 19	08:38:21.9	30.30	105.60			X				3.8
66 09 17	21:30:13.0	34.94	103.71		X					2.2
66 11 26	20:05:41.0	30.86	105.36		X					3.0
66 11 28	02:20:57.3	30.40	105.40			X				3.5
66 12 05	10:10:37.8	30.40	105.40			X				3.5
67 09 29	03:52:48.0	32.27	106.91		X					2.0
68 03 09	21:54:25.7	32.70	106.05		X					2.9
68 03 23	11:53:38.7	32.70	106.05		X					2.2
68 05 02	02:56:43.8	33.02	105.27		X					2.6
68 08 22	02:22:25.5	34.33	105.80		X					2.0
69 05 12	08:26:18.5	31.95	106.44		X					3.2
69 05 12	08:49:16.3	31.96	106.44		X					2.5
69 06 01	17:18:24.2	34.23	105.18		X					2.0
69 06 08	11:36:01.9	34.23	105.18		X					2.4
69 10 19	11:51:34.4	30.80	105.70			X				3.4
71 01 27	07:56:28.3	34.06	106.60		X					2.6
71 03 25	02:43:02.4	34.58	106.03		X					1.7
71 07 30	01:45:50.3	31.74	103.09		X					3.7
71 07 31	14:53:48.0	31.59	103.12		X					3.6
71 09 24	01:01:54.0	31.63	103.18		X					3.0
72 02 27	15:50:03.9	32.89	106.04		X					2.2
72 07 26	04:35:43.9	32.68	103.98		X					2.9

Table 2.5-3 Instrumental Origin Times, Locations and Magnitudes of Earthquakes Within 180 Mi of the WIPP Facility January 1, 1962 Through September 30, 1986 *

Date	Origin Time	Epicenter		Located By					Mag.
Yr/Mo/Da	GMT	Lat. North	Long. West	NMT	USGS	LANL	ASL	UTA	UTEP
72 12 09	05:58:38.9	31.68	106.44	X					2.2
72 12 10	14:37:50.2	31.68	106.41	X					2.2
72 12 10	14:58:02.5	31.65	106.48	X					1.9
74 02 02	20:39:22.6	35.10	103.10	X					2.9
74 07 31	17:34:48.5	33.12	104.18	X					1.8
74 08 17	07:35:17.3	30.30	105.77	X					2.4
74 08 26	07:33:21.5	34.44	105.79	X					2.3
74 09 26	23:44:08.5	32.81	106.16	X					1.9
74 10 02	02:40:20.0	31.98	100.71	X					2.6
74 10 27	16:18:53.9	30.53	104.79	X					2.2
74 11 01	10:45:49.6	33.80	106.60	X					2.0
74 11 12	02:31:59.0	32.06	100.98	X					2.5
74 11 12	02:35:34.2	32.13	102.67	X					1.8
74 11 12	07:14:27.7	31.93	100.72	X					2.2
74 11 21	16:22:58.6	32.53	106.25	X					1.9
74 11 21	18:59:05.8	32.10	102.69	X					2.3
74 11 22	08:54:00.1	32.99	101.14	X					1.9
74 11 22	14:11:13.2	33.81	105.15	X					1.5
74 11 28	03:35:20.5	32.59	104.12	X					3.7
75 01 30	16:00:39.9	31.15	102.85	X					2.1
75 04 08	15:29:42.4	32.18	101.70	X					1.6
75 04 20	16:59:56.4	31.29	102.60	X					2.0
75 07 25	08:11:40.0	29.88	102.54	X					2.8
75 08 01	07:27:41.2	30.65	104.57	X					3.2
75 08 03	03:26:53.1	31.04	103.97	X					1.9
75 10 10	11:16:55.5	33.35	104.99	X					1.9
76 01 10	01:49:58.5	31.74	102.75	X					1.9
76 01 15	20:43:57.6	30.95	102.31	X					1.8
76 01 19	04:03:31.4	31.95	103.10	X					2.4
76 01 21	23:11:17.2	30.90	102.29	X					1.7
76 01 22	07:21:57.7	31.92	103.05	X					2.0
76 01 25	04:48:27.3	31.93	103.09	X					3.1
76 01 28	07:37:54.7	32.29	101.27	X					2.1
76 02 04	16:15:30.0	31.67	103.54	X					1.3
76 02 14	05:35:22.1	31.61	102.47	X					1.6
76 02 19	08:23:58.4	31.60	103.66						X 1.2
76 02 19	08:45:31.5	31.63	103.67						X 1.2
76 02 19	09:23:36.6	31.65	103.66						X 1.0
76 03 05	02:58:18.0	31.92	102.59	X					2.1
76 03 20	12:42:20.4	31.26	104.95	X					1.8
76 03 20	16:15:58.1	32.20	103.10	X					1.7
76 03 27	22:25:21.9	32.21	103.10	X					1.7
76 04 01	14:40:27.7	33.94	105.88	X					1.8
76 04 01	14:46:58.2	33.88	105.98	X					2.2
76 04 01	14:51:16.5	33.94	105.87	X					1.3
76 04 03	20:40:51.4	31.30	103.17	X					2.5
76 04 06	18:09:00.3	33.88	105.93	X					2.6
76 04 12	08:02:34.9	32.25	103.11	X					1.5
76 04 18	03:48:18.5	32.88	105.94	X					1.6

Table 2.5-3 Instrumental Origin Times, Locations and Magnitudes of Earthquakes Within 180 Mi of the WIPP Facility January 1, 1962 Through September 30, 1986 *

Date	Origin Time	Epicenter			Located By						Mag.
Yr/Mo/Da	GMT Lat.	Long. North	West	N	UMT	LSGS	AANL	USL	UTA	TEP	
76 04 21	08:40:07.5	32.23	103.06		X						1.8
76 04 30	19:28:34.8	31.96	103.20		X						1.5
76 04 30	19:51:12.5	31.91	103.32		X						1.5
76 05 01	11:13:40.1	32.34	103.11		X						2.3
76 05 03	06:52:59.3	32.52	105.52		X						2.0
76 05 03	08:00:38.9	32.03	103.14		X						1.3
76 05 03	11:27:39.3	32.03	103.06		X						1.2
76 05 06	17:18:24.0	31.95	103.20		X						1.8
76 05 06	17:28:45.1	31.90	103.17		X						1.1
76 05 08	11:46:40.8	31.97	103.12		X						1.0
76 05 11	23:04:40.2	32.25	102.96		X						1.9
76 05 21	13:17:27.8	32.41	105.72		X						2.0
76 06 14	23:29:59.5	31.59	102.59		X						1.7
76 06 15	02:19:56.3	31.55	102.29		X						1.7
76 06 15	08:50:20.6	31.56	102.42		X						2.2
76 07 28	12:21:50.6	33.03	102.30		X						1.9
76 08 05	18:53:09.2	31.57	103.02							X	2.2
76 08 06	21:12:38.6	31.78	102.59							X	1.8
76 08 10	09:03:14.3	31.83	102.42		X						1.7
76 08 10	09:12:28.6	31.77	102.61							X	1.3
76 08 10	10:15:18.7	31.79	102.54		X						2.0
76 08 15	19:12:04.3	30.14	105.22		X						2.2
76 08 25	01:21:23.5	31.65	102.88		X						1.1
76 08 25	01:27:47.5	31.57	102.42		X						2.0
76 08 26	15:22:18.1	31.79	102.57		X						1.6
76 08 29	19:49:24.4	30.12	105.23		X						2.1
76 08 30	11:51:24.8	31.57	102.58		X						1.8
76 08 30	13:07:47.5	33.89	106.29		X						1.6
76 08 31	12:46:22.2	31.57	102.81		X						2.0
76 09 03	21:00:24.7	31.55	103.48							X	1.7
76 09 05	10:39:43.4	32.26	102.62		X						1.1
76 09 05	16:10:27.7	31.61	103.31							X	1.4
76 09 10	19:18:43.4	31.91	103.09							X	1.5
76 09 17	02:47:46.5	32.20	103.10		X						2.2
76 09 17	03:56:29.5	31.46	102.52		X						2.3
76 09 19	10:23:23.3	32.14	103.10		X						1.2
76 09 19	10:40:48.0	30.69	104.43		X						2.7
76 10 14	11:02:59.0	32.29	102.98		X						1.2
76 10 22	05:06:11.1	31.57	102.17		X						2.0
76 10 23	12:51:35.8	31.59	102.32		X						1.5
76 10 25	00:27:04.8	31.83	102.65		X						2.1
76 10 25	10:52:27.3	31.85	102.40							X	1.3
76 10 26	10:44:44.1	31.33	103.28							X	2.0
76 11 03	23:24:06.4	30.86	101.88		X						1.8
76 12 12	23:00:14.2	31.52	102.50		X						2.4
76 12 12	23:25:57.6	31.57	102.61		X						1.5
76 12 15	08:51:45.1	31.64	102.75		X						1.1
76 12 18	18:27:45.7	31.62	103.02							X	1.5
76 12 19	21:26:15.8	31.78	102.56		X						1.8

Table 2.5-3 Instrumental Origin Times, Locations and Magnitudes of Earthquakes Within 180 Mi of the WIPP Facility January 1, 1962 Through September 30, 1986 *

Date	Origin Time	Epicenter		Located By					Mag.	
Yr/Mo/Da	GMT	Lat. North	Long. West	NMT	USGS	LANL	ASL	UTA	UTEP	
76 12 19	23:54:23.3	32.22	103.09	X						1.5
76 12 19	23:56:47.4	32.23	103.10						X	2.1
76 12 23	08:36:58.0	34.68	105.77	X						1.9
77 01 04	18:31:37.6	32.36	106.92		X					2.7
77 01 04	23:41:58.0	34.03	106.00				X			2.4
77 01 05	12:19:02.0	34.05	106.00				X			1.7
77 01 08	20:20:27.2	31.50	102.98						X	1.1
77 01 29	09:40:40.1	30.53	104.84	X						1.9
77 02 04	07:48:16.2	30.67	104.64	X						1.7
77 02 10	01:22:50.8	32.21	103.07	X						1.1
77 02 18	14:10:36.5	32.24	103.07	X						1.2
77 03 01	11:50:45.9	31.25	103.28						X	1.2
77 03 05	22:56:14.6	31.47	102.84	X						1.4
77 03 12	00:05:23.8	31.62	103.29						X	1.1
77 03 14	10:10:25.6	32.97	101.06	X						2.4
77 03 20	07:54:08.4	32.23	103.07	X						1.6
77 03 23	11:02:51.8	31.81	102.51						X	1.1
77 03 29	00:35:34.7	31.60	103.28	X						1.0
77 04 03	12:39:57.4	31.26	103.03						X	1.1
77 04 03	13:48:09.2	31.49	103.17						X	1.6
77 04 03	14:24:07.3	31.45	103.20	X						1.5
77 04 04	00:44:05.3	31.48	103.17						X	1.6
77 04 04	01:47:50.4	31.44	103.18						X	1.3
77 04 04	04:35:56.8	31.50	103.17						X	1.3
77 04 04	04:47:30.4	31.46	103.18	X						1.3
77 04 04	05:01:29.8	31.23	103.01						X	1.3
77 04 07	05:45:40.3	32.23	103.07	X						1.9
77 04 07	18:56:55.1	31.53	103.29	X						1.4
77 04 12	23:18:26.7	31.22	102.58	X						1.7
77 04 16	06:44:22.2	31.61	103.22	X						0.8
77 04 17	21:47:09.9	31.55	102.30	X						1.3
77 04 18	18:08:24.1	31.60	103.28	X						1.4
77 04 22	22:56:34.8	32.21	102.97	X						1.0
77 04 25	10:12:51.4	32.09	102.78	X						1.4
77 04 26	09:03:07.3	31.90	103.03	X						2.1
77 04 28	12:54:38.2	31.81	102.53	X						0.9
77 04 28	12:55:40.1	31.80	102.53	X						2.2
77 04 28	15:22:36.8	31.78	102.53	X						1.3
77 04 29	03:09:41.3	31.81	102.58	X						1.3
77 05 01	21:33:58.7	31.45	103.16						X	1.1
77 06 07	23:01:20.9	32.85	100.90	X						3.2
77 06 08	00:51:26.0	32.70	100.72	X						2.6
77 06 08	13:29:12.0	32.89	100.95	X						3.0
77 06 08	13:39:25.	32.8	100.9	X						2.6
77 06 17	03:37:05.9	32.87	101.04	X						2.7
77 06 28	23:59:46.6	31.54	103.30						X	2.0
77 07 01	01:06:19.2	31.50	103.34						X	1.7
77 07 05	10:40:27.4	31.60	102.10	X						1.7
77 07 11	12:31:55.7	31.79	102.69	X						1.7

Table 2.5-3 Instrumental Origin Times, Locations and Magnitudes of Earthquakes Within 180 Mi of the WIPP Facility January 1, 1962 Through September 30, 1986 *

Date	Origin Time	Epicenter		Located By						Mag.
Yr/Mo/Da	GMT	Lat. North	Long. West	NMT	USGS	LANL	ASL	UTA	UTEP	
77 07 11	13:29:49.7	31.77	102.68	X						1.3
77 07 11	17:19:37.6	30.98	104.90					X		1.2
77 07 12	17:06:06.8	31.78	102.72	X						1.5
77 07 18	12:37:31.7	31.77	102.76	X						1.8
77 07 22	04:01:10.6	31.80	102.75	X						1.9
77 07 22	04:18:10.7	31.79	102.71	X						1.5
77 07 22	04:36:50.8	31.77	102.69	X						0.9
77 07 24	09:23:00.7	31.79	102.70	X						1.5
77 07 26	02:01:08.7	31.78	102.68	X						0.7
77 07 28	12:17:17.8	31.10	105.02					X		1.1
77 07 28	23:35:43.1	31.00	104.91					X		1.0
77 08 01	16:44:51.1	30.97	104.92					X		1.0
77 08 06	20:43:59.7	31.04	104.96					X		1.2
77 08 09	16:07:00.5	31.04	104.65					X		1.1
77 08 12	07:49:11.4	31.40	103.45						X	1.2
77 08 20	02:29:22.2	31.60	103.33						X	1.5
77 08 21	03:01:09.7	30.48	104.86	X						2.6
77 10 13	21:36:11.0	32.74	100.75	X						2.2
77 10 17	21:24:43.2	31.57	102.46						X	1.5
77 10 24	22:50:04.6	31.54	102.51						X	1.3
77 10 25	01:02:32.2	31.52	102.51						X	1.0
77 10 29	00:49:11.6	30.50	104.19					X		1.1
77 11 05	12:28:53.7	31.08	104.97					X		1.1
77 11 14	07:26:27.4	31.60	104.90	X						2.2
77 11 27	20:48:18.1	33.03	101.08	X						2.5
77 11 28	01:40:50.3	32.90	101.02	X						3.4
77 12 07	23:14:19.5	31.56	102.51						X	1.2
77 12 16	11:56:41.9	31.57	102.54	X						1.4
77 12 21	01:36:20.9	31.49	102.36	X						1.4
77 12 29	10:50:55.0	31.62	103.26						X	1.2
77 12 31	13:19:04.5	31.60	102.46						X	1.7
78 01 02	10:10:47.1	31.60	102.53						X	1.8
78 01 12	14:55:02.3	31.45	102.18	X						1.9
78 01 15	23:18:08.2	31.66	102.64	X						1.6
78 01 18	08:53:19.5	31.62	103.23	X						1.2
78 01 19	03:42:35.1	32.60	103.58	X						1.8
78 01 21	01:17:02.4	31.50	104.66					X		2.4
78 01 24	14:26:22.4	30.68	104.59					X		1.1
78 02 04	15:35:48.4	31.62	103.26						X	1.0
78 02 05	10:46:25.0	31.63	103.26						X	1.0
78 02 05	14:19:53.0	31.41	104.61	X						1.8
78 02 10	14:02:29.9	31.63	103.26						X	1.2
78 02 18	14:22:37.1	31.35	104.56	X						2.8
78 02 18	14:29:20.3	30.62	105.16					X		1.7
78 02 18	15:29:37.0	30.60	105.18					X		1.1
78 02 18	16:44:04.7	30.61	105.19					X		1.0
78 02 18	17:30:08.5	30.61	105.19					X		2.1
78 02 18	17:54:09.8	30.61	105.19					X		1.5
78 02 18	18:45:16.5	30.62	105.20					X		1.3

Table 2.5-3 Instrumental Origin Times, Locations and Magnitudes of Earthquakes Within 180 Mi of the WIPP Facility January 1, 1962 Through September 30, 1986 *

Date	Origin Time	Epicenter		Located By						Mag.
Yr/Mo/Da	GMT	Lat. North	Long. West	NMT	USGS	LANL	ASL	UTA	UTEP	
78 02 19	07:05:18.7	30.61	105.18					X		1.1
78 02 19	12:12:00.0	30.61	105.19					X		2.1
78 02 20	02:52:55.4	30.62	105.20					X		1.1
78 03 02	08:57:51.8	32.18	103.07	X						1.2
78 03 02	10:04:50.1	31.52	102.41	X						2.8
78 03 02	11:27:09.4	31.61	102.69						X	1.2
78 03 02	11:55:57.1	31.59	102.61						X	1.8
78 03 19	10:48:49.1	31.50	102.51	X						1.8
78 03 28	05:51:35.4	29.69	104.04					X		1.1
78 04 06	09:13:27.4	30.86	104.86					X		1.2
78 04 07	00:57:41.6	31.94	105.33	X						2.3
78 04 12	23:05:00.0	30.66	104.48					X		1.1
78 05 30	13:19:31.7	30.65	104.56					X		1.4
78 06 03	11:40:18.2	30.40	104.64					X		1.6
78 06 06	20:05:00.1	30.30	104.58					X		1.4
78 06 16	11:46:54.2	33.03	100.77		X					4.4
78 06 16	11:53:33.0	33.10	101.20					X		3.4
78 06 29	20:58:45.1	31.05	101.94	X						3.4
78 07 05	02:45:06.7	31.78	102.55	X						1.2
78 07 05	10:40:28.9	31.60	102.25	X						1.7
78 07 18	12:07:32.8	30.40	104.28	X						1.8
78 07 21	05:02:36.2	34.68	105.04	X						3.1
78 07 21	20:35:41.6	31.24	102.48	X						1.7
78 08 12	12:45:27.7	31.62	103.27	X						0.9
78 08 14	13:29:43.7	31.61	102.56	X						2.2
78 08 19	19:44:36.5	31.57	103.21	X						0.8
78 09 29	17:59:41.4	30.32	104.66				X			1.9
78 09 29	20:07:43.3	31.52	102.51	X						2.3
78 09 30	23:31:47.5	31.66	102.71	X						1.9
78 10 02	09:35:06.9	31.54	102.51	X						1.7
78 10 02	09:58:33.4	31.60	102.55	X						1.7
78 10 02	11:25:09.9	31.51	102.52	X						2.0
78 10 03	06:12:17.2	31.91	102.99	X						1.8
78 10 06	15:23:46.3	31.53	102.34	X						2.2
79 01 19	09:07:55.1	30.50	105.12					X		1.5
79 02 13	19:02:13.4	30.17	104.36					X		1.5
79 02 16	23:50:32.5	31.03	104.90					X		1.7
79 03 28	15:20:02.8	31.10	102.65	X						1.0
79 04 25	00:19:26.0	31.93	101.99	X						1.6
79 04 28	01:01:40.0	30.58	104.69	X						2.1
79 06 09	01:28:59.1	30.65	104.50					X		1.6
79 06 28	19:23:45.4	30.38	105.15					X		1.6
79 07 05	01:05:05.9	32.90	101.31	X						2.7
79 07 17	07:26:14.4	32.52	103.88	X						2.0
79 08 03	05:29:38.3	32.85	100.94	X						2.6
80 02 05	23:56:54.7	29.92	104.44						X	2.9
80 03 21	08:35:23.7	31.56	102.41	X						1.0
81 08 13	23:39:52.4	31.91	102.58	X						2.2
81 09 16	03:08:53.8	33.74	105.24	X						1.8

Table 2.5-3 Instrumental Origin Times, Locations and Magnitudes of Earthquakes Within 180 Mi of the WIPP Facility January 1, 1962 Through September 30, 1986 *

Date	Origin Time	Epicenter		Located By						Mag.
Yr/Mo/Da	GMT	Lat. North	Long. West	NMT	USGS	LANL	ASL	UTA	UTEP	
82 01 04	16:56:08.1	31.18	102.49							3.4
82 07 22	14:38:55.6	34.27	105.62	X						0.5
82 08 28	08:04:18.2	32.55	104.52	X						1.1
82 09 22	15:41:52.5	34.10	106.10	X						0.5
82 10 26	00:37:49.8	33.64	103.58	X						1.5
82 11 03	23:23:50.0	32.86	105.99	X						0.6
82 11 25	18:50:08.6	32.90	100.88	X						2.3
82 11 28	02:36:48.0	33.00	100.80					X		3.3
83 01 09	11:49:04.0	30.35	105.76	X						1.9
83 01 12	10:11:12.5	34.33	105.17	X						1.5
83 01 29	11:44:52.2	31.38	102.36	X						2.2
83 03 03	18:13:44.7	29.80	104.29	X						2.8
83 03 31	20:51:21.2	32.36	106.42	X						1.7
83 04 04	09:57:21.0	30.58	105.25	X						1.2
83 04 11	11:19:15.0	31.28	102.48	X						1.2
83 04 17	19:39:02.0	33.43	105.93	X						1.7
83 04 24	05:13:02.0	32.32	103.90	X						-1.5
83 04 30	07:34:18.8	33.30	106.43	X						3.4
83 05 14	01:35:00.0	31.92	106.67	X						0.8
83 05 17	01:40:20.0	31.47	103.57	X						2.0
83 05 20	03:44:29.0	31.50	102.08	X						1.2
83 06 03	20:31:21.0	29.83	103.42	X						1.1
83 06 05	06:17:22.0	32.52	105.35	X						1.3
83 06 18	23:52:22.0	31.05	102.47	X						1.1
83 06 21	23:01:13.0	33.63	103.58	X						1.6
83 07 06	22:17:02.0	30.38	103.28	X						1.2
83 07 09	04:31:19.0	30.33	104.00	X						1.0
83 07 09	17:06:02.0	30.35	104.02	X						0.7
83 07 13	20:38:00.0	32.87	104.17	X						0.2
83 07 21	15:35:26.0	30.95	105.15	X						1.6
83 08 02	08:16:11.0	32.58	103.60	X						0.0
83 08 02	09:23:17.0	32.55	103.67	X						0.0
83 08 04	00:50:31.0	32.60	105.12	X						1.3
83 08 14	13:35:59.0	33.47	105.35	X						1.1
83 08 19	03:17:02.0	31.92	101.92	X						1.5
83 08 19	03:31:07.0	31.58	102.17	X						1.3
83 08 23	15:05:02.0	30.58	105.25	X						1.9
83 08 26	04:56:40.0	31.37	102.28	X						1.9
83 08 30	21:16:01.0	32.35	104.62	X						0.9
83 08 31	11:10:07.0	32.52	103.58	X						0.6
83 08 31	22:25:58.0	31.80	102.45	X						1.9
83 09 06	11:12:48.0	33.75	105.82	X						1.0
83 09 29	07:44:11.0	34.93	104.43	X						2.7
83 09 30	11:42:35.0	30.57	104.00	X						1.6
83 11 09	00:12:49.0	32.67	102.58	X						0.9
83 11 12	03:11:18.0	32.60	102.75	X						1.3
83 11 16	21:01:50.0	32.52	103.47	X						-0.4
83 12 01	10:05:59.0	31.83	102.02	X						1.4
83 12 03	23:46:51.0	30.90	103.33	X						2.1

Table 2.5-3 Instrumental Origin Times, Locations and Magnitudes of Earthquakes Within 180 Mi of the WIPP Facility January 1, 1962 Through September 30, 1986 *

Date	Origin Time	Epicenter		Located By						Mag.
Yr/Mo/Da	GMT	Lat. North	Long. West	NMT	USGS	LANL	ASL	UTA	UTEP	
83 12 26	11:05:11.0	31.17	102.33	X						1.5
84 01 02	10:29:36.0	31.70	102.15	X						1.8
84 01 03	09:38:18.0	30.80	103.00	X						1.5
84 01 03	10:20:00.0	30.80	103.00	X						1.5
84 01 03	10:28:33.0	30.80	103.00	X						1.3
84 01 16	08:49:03.0	33.88	103.08	X						0.8
84 01 16	12:09:44.0	33.88	103.08	X						1.1
84 02 23	05:43:30.0	32.65	104.02	X						-0.7
84 03 02	09:08:56.0	30.90	105.10	X						1.4
84 03 12	12:37:10.0	32.62	103.72	X						0.2
84 03 23	01:37:36.0	32.30	100.80	X						1.5
84 03 24	22:58:00.0	34.75	105.30	X						0.5
84 04 17	16:16:46.0	32.43	106.57	X						1.5
84 05 12	17:29:55.0	34.17	105.63	X						1.1
84 05 21	20:25:26.0	32.37	104.03	X						1.2
84 05 26	00:57:16.0	32.60	103.47	X						-0.2
84 06 28	01:58:29.0	34.33	105.98	X						0.1
84 07 17	08:24:06.0	32.77	105.92	X						1.3
84 07 20	21:56:58.0	34.68	105.38	X						0.3
84 08 01	04:04:07.0	32.70	105.90	X						0.4
84 08 14	06:32:22.0	33.50	106.45	X						1.3
84 08 18	12:46:18.0	31.53	103.12	X						1.8
84 08 21	05:39:23.0	33.57	106.57	X						1.4
84 08 25	00:01:32.0	32.92	103.73	X						0.9
84 08 28	12:13:54.0	34.27	105.67	X						1.0
84 08 31	02:49:02.0	34.72	105.30	X						1.3
84 09 11	14:47:34.0	32.00	100.70	X						3.0
84 09 21	01:44:21.0	34.67	105.38	X						1.5
84 09 25	23:23:02.0	32.35	102.58	X						0.8
84 10 03	08:09:56.0	32.80	103.98	X						0.7
84 10 04	05:15:06.0	33.88	103.30	X						1.3
84 11 10	23:10:00.0	34.57	105.37	X						1.1
84 11 27	19:06:03.0	33.62	105.37	X						1.6
84 12 04	20:36:30.0	32.55	103.12	X						2.5
84 12 08	00:37:37.0	34.72	105.28	X						1.4
84 12 12	23:53:40.0	33.33	105.63	X						1.5
85 01 06	14:30:45.0	34.35	104.78	X						2.3
85 01 06	22:49:30.0	33.58	105.42	X						1.1
85 03 09	22:53:28.0	33.93	105.15	X						1.3
85 03 12	04:01:41.0	33.40	106.10	X						1.3
85 03 18	05:37:39.9	32.36	104.72	X						1.6
85 04 16	12:26:02.0	34.03	106.00	X						0.8
85 04 16	12:27:06.0	34.03	106.00	X						0.4
85 05 03	15:28:20.0	31.17	104.68	X						1.9
85 05 04	04:05:50.0	33.35	106.40	X						0.5
85 05 17	03:08:09.0	34.72	105.30	X						1.2
85 05 30	19:54:13.0	32.57	106.93	X						1.0
85 05 30	23:13:12.0	32.55	106.95	X						1.1
85 05 30	23:22:50.0	32.48	106.92	X						1.2

Table 2.5-3 Instrumental Origin Times, Locations and Magnitudes of Earthquakes Within 180 Mi of the WIPP Facility January 1, 1962 Through September 30, 1986 *

Date	Origin Time	Epicenter		Located By					Mag.
Yr/Mo/Da	GMT	Lat. North	Long. West	NMT	USGS	LANL	ASL	UTA	UTEP
85 06 02	13:54:54.0	31.25	102.18	X					1.6
85 06 04	23:06:49.0	34.65	105.33	X					1.4
85 06 05	10:36:01.0	32.57	106.92	X					2.9
85 06 05	11:15:09.0	32.58	106.92	X					1.2
85 06 05	11:47:30.0	32.52	106.80	X					1.1
85 06 10	04:53:03.0	33.83	105.95	X					1.0
85 06 10	21:23:24.0	34.22	105.93	X					2.0
85 06 12	01:58:31.0	34.72	103.82	X					1.8
85 07 28	16:45:53.0	34.07	105.87	X					0.4
85 08 02	01:39:57.0	32.48	104.23	X					1.4
85 08 04	13:57:27.0	33.40	106.30	X					0.9
85 08 12	19:55:12.0	34.30	106.02	X					1.2
85 08 27	04:58:59.0	33.37	106.08	X					1.8
85 09 05	06:56:49.0	33.65	103.75	X					1.8
85 09 05	17:57:52.0	32.55	106.95	X					1.4
85 09 06	05:22:03.0	32.52	106.90	X					0.9
85 09 06	05:22:46.0	32.55	106.93	X					2.6
85 09 09	08:57:58.0	33.95	105.98	X					0.5
85 09 18	14:49:39.0	30.93	103.47	X					2.0
85 09 19	00:37:48.0	32.57	106.90	X					1.0
85 09 22	22:59:30.0	32.57	106.93	X					1.2
85 09 23	01:35:07.0	32.57	106.93	X					1.1
85 09 25	02:13:22.0	33.33	106.47	X					0.8
85 09 25	19:23:22.0	32.52	106.93	X					2.5
85 09 25	20:35:07.0	32.52	106.93	X					0.8
85 09 25	23:01:38.0	32.52	106.93	X					1.1
85 09 26	01:04:23.0	32.52	106.93	X					0.6
85 10 23	02:28:29.0	33.22	106.43	X					0.6
85 11 13	06:17:58.0	32.02	103.12	X					1.8
85 11 13	08:47:19.0	33.67	105.73	X					0.6
85 11 13	23:07:58.0	33.80	106.35	X					0.9
85 11 28	19:39:05.0	31.57	102.02	X					1.8
86 01 15	21:01:41.0	34.50	105.47	X					1.8
86 01 28	03:52:37.0	34.15	105.27	X					1.2
86 01 30	19:07:18.0	33.55	103.98	X					1.9
86 01 30	22:26:37.0	31.17	101.23	X					3.5
86 02 07	12:36:09.0	32.50	105.45	X					1.4
86 03 11	05:57:07.0	32.08	105.07	X					2.0
86 03 21	00:36:13.0	33.40	105.68	X					1.6
86 03 26	05:19:08.0	34.62	105.28	X					1.5
86 04 05	13:41:48.0	34.07	105.75	X					0.9
86 04 17	21:04:30.0	32.58	106.92	X					2.7
86 04 29	23:14:03.0	31.03	102.67	X					1.2
86 04 30	01:28:02.0	31.03	102.67	X					1.1
86 05 11	10:35:44.0	30.60	105.97	X					1.9
86 05 18	14:06:43.0	34.38	105.65	X					0.8
86 05 28	22:15:24.0	31.75	105.12	X					1.6
86 06 07	02:29:50.0	30.17	105.48	X					1.9
86 06 19	05:06:08.0	32.50	106.95	X					1.4

Table 2.5-3 Instrumental Origin Times, Locations and Magnitudes of Earthquakes Within 180 Mi of the WIPP Facility January 1, 1962 Through September 30, 1986 *

Date	Origin Time	Epicenter		Located By						Mag.
Yr/Mo/Da	GMT	Lat. North	Long. West	NMT	USGS	LANL	ASL	UTA	UTEP	
86 06 27	09:47:24.0	32.00	102.00	X						2.2
86 07 09	19:51:02.0	31.50	102.48	X						1.6
86 07 20	19:31:26.0	33.47	105.02	X						1.5
86 08 02	17:51:43.0	33.68	103.78	X						1.7
86 08 14	21:26:52.0	32.57	104.68	X						1.3
86 08 15	07:59:20.0	33.02	103.77	X						1.7
86 09 10	16:50:49.0	34.12	105.75	X						0.8

* REFERENCES 1, 2, 3, 19, 20

Table 2.5-4 Risk Curve Parameters

#	Figure	Curve	Source Zone	Recurrence Formula	M_{max}
1	2.5-27	1	Algermissen & Perkins* Rio Grande rift (see Figure 2.5-12)	$\log N = 2.56 - M_L$	7.8
2	2.5-27	2	Algermissen & Perkins* Rio Grande rift (see Figure 2.5-12)	$\log N = 3.06 - M_{CORR}$	7.8
3	2.5-27	3	Basin & Range subregion (Figure 2.5-15)	$\log N = 2.75 - M_L$	7.8
4	2.5-27	4	Basin & Range subregion (Figure 2.5-15)	$\log N = 3.25 - M_{CORR}$	7.8
5	2.5-28	1	Algermissen & Perkins* Cen. Basin Plat. (see Figure 2.5-12)	$\log N = 2.74 - 0.9M_L$	5.0
6	2.5-28	2	Algermissen & Perkins* Cen. Basin Plat. (see Figure 2.5-12)	$\log N = 2.74 - 0.9M_L$	6.0
7	2.5-28	3	Algermissen & Perkins* Cen. Basin Plat. (see Figure 2.5-12)	$\log N = 3.19 - 0.9\ M_{CORR}$	5.0
8	2.5-28	4	Algermissen & Perkins* Cen. Basin Plat. (see Figure 2.5-12)	$\log N = 3.19 - 0.9\ M_{CORR}$	6.0
9	2.5-28	5	Cen. Basin Plat. geometry suggested by geology (see Figure 2.5-15)	$\log N = 2.74 - 0.9\ M_L$	5.0
10	2.5-28	6	Cen. Basin Plat. geometry suggested by geology (see Figure 2.5-15)	$\log N = 2.74 - 0.9\ M_L$	6.0
11	2.5-28	7	Cen. Basin Plat. geometry suggested by geology (see Figure 2.5-15)	$\log N = 3.19 - 0.9\ M_{CORR}$	5.0
12	2.5-28	8	Cen. Basin Plat. geometry suggested by geology (see Figure 2.5-15)	$\log N = 3.19 - 0.9\ M_{CORR}$	6.0
13	2.5-29	1	WIPP Facility	$\log N = 1.93 - M_L$	4.5
14	2.5-29	2	WIPP Facility	$\log N = 1.93 - M_L$	5.5
15	2.5-29	3	WIPP Facility	$\log N = 2.43 - M_{CORR}$	4.5
16	2.5-29	4	WIPP Facility	$\log N = 2.43 - M_{CORR}$	5.5

* S. T. Algermissen and D. M. Perkins, "A Probabilistic Estimate of Maximum Ground Acceleration in the Contiguous United States," U.S. Geol. Surv. open-file Report 76-416, pp. 1-45, (1976).21 •

This page intentionally blank

PRINCIPAL DESIGN AND SAFETY CRITERIA
TABLE OF CONTENTS

SECTION	TITLE	PAGE NO.
3.1	General Design Criteria	3.1-1
3.1.1	TRU Waste Criteria	3.1-1
3.1.2	Facility By-Products	3.1-2
3.1.2.1	Nonradioactive By-Products	3.1-2
3.1.2.2	Site-Derived Radioactive Waste	3.1-2
3.1.3	Design/Functional Classification of Structures, Systems, and Components	3.1-2
3.1.3.1	Design Classification of SSCs	3.1-2
3.1.3.1.1	Design Class Definitions	3.1-3
3.1.3.1.1.1	Design Class I	3.1-3
3.1.3.1.1.2	Design Class II	3.1-3
3.1.3.1.1.3	Design Class III	3.1-3
3.1.3.1.2	Design Class Interfaces	3.1-4
3.1.3.2	Functional Classification of SSCs	3.1-4
3.1.3.3	Severe Natural Events	3.1-5
3.1.3.3.1	Design Basis Tornado (DBT)	3.1-5
3.1.3.3.2	Design Basis Earthquake (DBE)	3.1-5
3.1.4	Decontamination and Decommissioning	3.1-5
	References for Section 3.1	3.1-6
3.2	Structural Design Criteria	3.2-1
3.2.1	Wind Loadings	3.2-1
3.2.1.1	Vertical Velocity Distribution and Gust Factors	3.2-1
3.2.1.2	Determination of Applied Forces	3.2-1
3.2.2	Tornado Loadings	3.2-1
3.2.3	Applicable Design Parameters	3.2-1
3.2.3.1	Determination of Forces on Structures	3.2-2
3.2.3.2	Plant Structures not Designed for Tornado Loads	3.2-2
3.2.4	Water Level (Surface Flood) Design	3.2-2
3.2.4.1	Phenomena Considered in Design Load Calculations	3.2-2
3.2.4.2	Flood Force Application	3.2-3
3.2.4.3	Flood Protection	3.2-3
3.2.5	Groundwater Design	3.2-3
3.2.5.1	Groundwater Forces	3.2-3
3.2.5.2	Design Loads	3.2-3
3.2.5.3	Protection From Groundwater	3.2-3
3.2.6	Protection Against Dynamic Effects	3.2-4
3.2.7	Seismic Design	3.2-4
3.2.7.1	Input Criteria	3.2-4
3.2.7.1.1	Design Response Spectra	3.2-4
3.2.7.1.2	Derivation of Design Response Spectra	3.2-4
3.2.7.1.3	Critical Damping Values	3.2-4
3.2.7.1.4	Soil Supported Structures	3.2-4
3.2.7.1.5	Soil-Structure Interaction	3.2-5
3.2.7.2	Seismic System Analysis	3.2-5
3.2.7.2.1	Seismic Analysis Method	3.2-5

PRINCIPAL DESIGN AND SAFETY CRITERIA
TABLE OF CONTENTS

SECTION	TITLE	PAGE NO.
3.2.7.2.2	Methods Used to Couple Soil with Seismic Structures	3.2-5
3.2.7.2.3	Development of Floor Response Spectra	3.2-5
3.2.7.2.4	Effects of Variations on Floor Response Spectra	3.2-5
3.2.7.2.5	Use of Constant Vertical Load Factors	3.2-6
3.2.7.2.6	Method Used to Account for Torsional Effects	3.2-6
3.2.7.2.7	Analysis Procedure for Damping	3.2-6
3.2.7.3	Seismic Subsystem Analysis	3.2-6
3.2.7.3.1	Determination of the Number of Earthquake Cycles	3.2-6
3.2.7.3.2	Basis for the Selection of Forcing Frequencies	3.2-6
3.2.7.3.3	Root-Mean Square Basis	3.2-6
3.2.7.3.4	Procedure for Combining Modal Responses	3.2-7
3.2.7.3.5	Significant Dynamic Response Modes	3.2-7
3.2.7.3.6	Basis for Computing Combined Response	3.2-7
3.2.7.3.7	Amplified Seismic Responses	3.2-7
3.2.7.3.8	Modal Period Variation	3.2-7
3.2.7.3.9	Torsional Effects of Eccentric Masses	3.2-7
3.2.7.3.10	Seismic Analysis for Overhead Cranes	3.2-7
3.2.8	Snow Loadings	3.2-8
3.2.9	Equipment and Materials-Derived Loads	3.2-8
3.2.9.1	Nomenclature	3.2-8
3.2.10	Thermal Loadings (Salt)	3.2-9
3.2.11	Combined Load Criteria	3.2-9
3.2.11.1	Nomenclature	3.2-9
3.2.11.2	Load Combinations	3.2-10
3.2.11.2.1	Design Requirements	3.2-10
3.2.11.2.2	Minimum Factors of Safety with Respect to Overturning, Sliding, and Floatation	3.2-11
3.2.12	Soil Erosion Control	3.2-11
	References for Section 3.2	3.2-12
3.3	Safety Protection Criteria	3.3-1
3.3.1	Confinement Requirements	3.3-1
3.3.2	Fire Protection	3.3-1
3.3.3	Radiological Protection	3.3-2
3.3.3.1	Controlled Areas	3.3-2
3.3.3.2	High Radiation Areas	3.3-2
3.3.3.3	Shielding	3.3-2
3.3.3.4	Nuclear Criticality Safety	3.3-2
3.3.4	Industrial and Mining Safety	3.3-3
	References for Section 3.3	3.3-4

PRINCIPAL DESIGN AND SAFETY CRITERIA
LIST OF FIGURES

FIGURE	TITLE	PAGE NO.
Figure 3.2-1,	Idealized Function of Atmospheric Pressure Change vs. Time	3.2-13
Figure 3.2-2,	Horizontal Design Response Spectra	3.2-14
Figure 3.2-3,	Vertical Design Response Spectra	3.2-15

PRINCIPAL DESIGN AND SAFETY CRITERIA
LIST OF TABLES

TABLE **TITLE** **PAGE NO.**

Table 3.1-1, Basic Design Requirements 3.1-7
Table 3.2-1, Design Wind Load 3.2-16
Table 3.2-2, Damping Values of SSCs for Design Basis Earthquake 3.2-17
Table 3.2-3, Design Loads for Surface Structures 3.2-18

PRINCIPAL DESIGN AND SAFETY CRITERIA

This chapter discusses principal design and safety criteria for structures, systems, and components (SSCs) that protect the public, workers, and the environment from hazards posed by Waste Isolation Pilot Plant (WIPP) operations. For the WIPP, SSCs are categorized as Design Class I, II, and III in the WIPP System Design Descriptions (SDDs). Criteria for the selection of Design Class I, II, and III SSCs are identified in the General Plant SDD (GPDD)[1] and are discussed in Section 3.1, General Design Criteria. Design information for WIPP Design Class I, II, and III SSCs is provided in Chapter 4, Facility Design and Operation.

3.1 General Design Criteria

The mission of the WIPP is to permanently dispose of transuranic waste left from the research and production of nuclear weapons. The WIPP facility was designed and constructed according to DOE Order 6430, General Design Criteria Manual for Department of Energy Facilities, draft, dated June 10, 1981,[2] and codes and standards applicable at the time of construction. Facility modifications designed prior to DOE Order 6430 being superceded were designed according to the revision of DOE Order 6430 and codes and standards applicable at the time of modification. Present and future modifications shall be designed according to DOE Orders O 420.1, Facility Safety [3] and O 430.1A, Life-Cycle Asset Management[4], and all applicable codes and standards as described by the SDDs.

The Department of Energy - Carlsbad Area Office (DOE-CAO) and appropriate regulatory agencies determined that permanent disposal in the WIPP facility protects human health and the environment. The placement of CH waste in the WIPP began in March 1999 and will be for the purpose of permanent disposal with no intent to retrieve. However, if in the future it is determined that recovery of disposed waste is required, prior to commencement of recovery operations: (1) principal design and safety criteria for SSCs that protect the public, workers, and the environment from hazards posed by recovery shall be developed, and (2) those hazards associated with the recovery design and process shall be analyzed and result in a change to this SAR to address recovery.

3.1.1 TRU Waste Criteria

The acceptance criteria of remote-handled (RH) transuranic (TRU) waste to be received and disposed at the WIPP facility is defined in this section. While CH waste has a relatively low surface dose rate, lending itself to direct handling, RH waste surface dose rates require remote handling.

The WIPP shall provide disposal capacity of 6.2 million cubic ft (175,460 cubic m) of TRU waste in TRU waste containers for underground disposal over an operating life of 35 years.

The WIPP shall have the capacity to process up to a maximum of 500,000 cubic ft (14,150 cubic m) of CH TRU waste per year, and 10,000 cubic ft (283 cubic m) of RH TRU waste per year.

The acceptance criteria for TRU waste to be disposed at the WIPP facility, and the basis for the criteria, are presented in the RH TRU Waste Acceptance Criteria[5] (RH WAC) for the WIPP. The RH WAC [5] incorporates five related sets of requirements:

- WIPP Operations and Safety Requirements
- Transportation Safety Requirements for the RH Road Casks
- Hazardous Waste Facility Permit Requirements

- Compliance Certification Decision Requirements
- Land Withdrawal Act Requirements

3.1.2 Facility By-Products

3.1.2.1 Nonradioactive By-Products

The major non-radioactive by-product at the WIPP facility is mined salt. Basic design criterion is the mined salt shall be free of radioactive contamination. Other regulated non-radioactive hazardous by-products shall be handled in compliance with applicable codes and standards.

3.1.2.2 Site-Derived Radioactive Waste

Site-derived radioactive waste shall be treated as radioactive mixed waste unless proof is available that wastes are not mixed. The mixed waste shall be handled in accordance with the Hazardous Waste Facility Permit,[6] as implemented by the State of New Mexico Environmental Department. Because derived wastes can contain only those materials present in the waste from which they were derived and any materials or processes applied at WIPP, no additional chemical analysis of the derived waste is required for disposal. Characterization of derived waste shall primarily be based on information provided by the generator and knowledge of the processes and materials at WIPP.

3.1.3 Design/Functional Classification of Structures, Systems, and Components

3.1.3.1 Design Classification of SSCs

The design classification system shall be used for categorizing SSCs of the WIPP facility, and to determine the proper level of design requirements specified for each SSC. These requirements shall be used to ensure that each SSC will perform its required design function reliably when subjected to: (1) design basis accidents, (2) operating loads, (3) environmental operating conditions, and (4) natural phenomena.

Classification categories shall be identified as Design Class I, II, or III, with Design Class III subdivided into Design Class IIIA and IIIB, as defined in Section 3.1.3.1.1.

Where a single item performs two or more functions, and may be assigned to more than one design classification, the more stringent class shall be assigned. Portions of an item performing different functions may be assigned to different classes if the item contains a suitable interface boundary meeting the requirements of Section 3.1.3.1.2, Design Class Interfaces.

The basic design codes and standards applicable to each class are shown in Table 3.1-1. SSCs are assigned a Design Class on an item-by-item basis, in accordance with the WIPP engineering procedure WP 09-CN3023, Design Classification Determination.[7]

3.1.3.1.1 Design Class Definitions

3.1.3.1.1.1 Design Class I

Design Class I shall apply to SSCs for the prevention or mitigation of the consequences of an accident or severe natural phenomena that could result in a 50-year dose commitment beyond the WIPP Exclusive Use Area in excess of 25 rem (250 mSv) Total Effective Dose Equivalent (TEDE). Currently there are no Design Class I SSCs at the WIPP.

3.1.3.1.1.2 Design Class II

Design Class II shall apply to SSCs that:

- Provide permanent confinement
- Provide permanent shielding
- Monitor variables to:
  - Verify that essential WIPP operational limits are not exceeded
  - Indicate the status of safety system bypasses that are not automatically removed as a part of safety system operation
  - Indicate the status of Design Class I items during all conditions of plant operations
  - Verify that off-normal radiological dose limits are not exceeded following accidental releases of radioactive material

3.1.3.1.1.3 Design Class III

This classification shall be divided into Design Class IIIA and IIIB as follows:

Design Class IIIA shall be applied to those SSCs not included in Design Class I or Design Class II, requiring a different level of quality, beyond that expected in commercial-industrial practice, and includes any of the following functional areas:

- Airborne radioactivity monitoring following accidental releases of radioactive materials
- Major sustained stoppage of waste handling and disposal operations due to failure
- Design and fabrication complexity or uniqueness
- Potential for contamination due to component failure
- Special considerations that are required beyond those contained in nationally recognized codes and standards to ensure the health and safety of operating personnel
- Equipment failure could be of special significance to the health and safety of operating personnel
- Equipment with unique subassemblies, when replaced, shall be identical in terms of function, form, and fit

Design Class IIIB: Class IIIB shall be applied to all other items.

3.1.3.1.2 Design Class Interfaces

When the failure of less-stringently classified SSCs could prevent more-stringently classified SSCs from accomplishing their required function, then one of the following options shall be followed:

- Change the design to preclude consequential failure of the more-stringently classified item.
- Reclassify the less stringently classified item to correspond to that of the more-stringently classified SSC.
- Provide an interface barrier to protect the more-stringently classified SSC.

Exceptions to these criteria shall be addressed on a case-by-case basis and described in the design documents.

3.1.3.2 Functional Classification of SSCs

The SSC functional classifications, definitions, and applicability to WIPP are as follows:

- Safety Class. SSCs whose preventive or mitigative function is necessary to keep hazardous material exposure to the maximally exposed individual (MEI) below off-site risk evaluation guidelines defined in the WIPP RH SAR.
- Safety Significant. SSCs not designated as Safety Class, but whose preventive or mitigative function is a major contributor to defense in depth (i.e. prevention of uncontrolled material releases) and/or worker safety as determined from hazards analysis.

  For WIPP, "prevention of uncontrolled material releases" applies to SSCs whose preventive or mitigative function is necessary to keep hazardous material exposure to a non-involved worker below on-site risk evaluation guidelines defined in the WIPP RH SAR. These guidelines apply to personnel located at 100 meters from a discharge point. As discussed in DOE-STD-3009-94,[8] these SSCs are often not developed based on calculations and do not normally have numerical evaluation guidelines. However, these calculations and guidelines are currently included in the WIPP RH SAR, and are therefore used as the basis for designation of this classification.

  As discussed in DOE-STD-3009-94,[8] a Safety Significant SSC designation based on worker safety is limited to those SSCs whose failure is estimated to result in an acute worker fatality or serious injury to workers. For WIPP, a Safety Significant designation based on worker safety applies to SSCs that prevent an acute worker fatality or serious injury from hazardous material release that is outside the protection of standard industrial practice, OSHA regulation, or mine safety regulation (MSHA).

- Defense in Depth. SSCs that fulfill a defense-in-depth safety function important to accident scenarios that are evaluated in the WIPP RH SAR.
- Balance of Plant. This category includes facility SSCs not identified above. SSCs or functions required by OSHA and mine safety regulation are included in this category.

3.1.3.3 Severe Natural Events

3.1.3.3.1 Design Basis Tornado (DBT)

The DBT is the most severe credible tornado that could occur at the WIPP site as described in Chapter 2. DBT SSCs shall be designed to withstand the highest winds generated by this tornado (183 mi/hr [293 km/hr]), based on a 1,000,000-year recurrence period, and retain their safety function.

3.1.3.3.2 Design Basis Earthquake (DBE)

The DBE is the most severe credible earthquake that could occur at the WIPP site as described in Chapter 2. DBE SSCs shall be designed to withstand a free-field horizontal and vertical ground acceleration of 0.1g, based on a 1,000-year recurrence period, and retain their safety functions.

3.1.4 Decontamination and Decommissioning

Design of equipment and areas within a facility that may become contaminated with radioactive or other hazardous materials shall incorporate features to simplify decontamination. Examples of features to be incorporated are identified in DOE Order 420.1.[3]

The WIPP shall be designed to have the capability of being decommissioned, shall have a documented closure plan, and shall provide for the surveillance, maintenance, and decommissioning of the facility as required by DOE O 430.1A[4] and DOE O 433.1 [9], Maintenance Management Program. The WIPP equipment and facilities in which radioactive or hazardous materials are utilized shall be designed to simplify decommissioning and to increase the potential for reuse of the facilities, equipment, and materials.

References for Section 3.1

1 Waste Isolation Pilot Plant General Plant Design Description (GPDD).

2 DOE Order 6430.1, General Design Criteria Manual for Department of Energy Facilities, June 10, 1981 draft (For reference only, superceded by DOE O 420.1 and Doe O 430.1A).

3 DOE O 420.1, Facility Safety.

4 DOE O 430.1A, Life-Cycle Asset Management.

5 WIPP-DOE-Draft 7-3123, Remote-Handled Waste Acceptance Criteria for the Waste Isolation Pilot Plant.

6 Hazardous Waste Facility Permit No. NM4890139088-TSDF, issued by the New Mexico Environment Department October 27, 1999.

7 WP 09-CN3023, Design Classification Determination.

8 DOE-STD-3009-94, Preparation Guide for U.S. Department of Energy Nonreactor Nuclear Facility Safety Analysis Reports (Change 1, January 2000).

9 DOE Order 433.1, Maintenance Management Program for DOE Nuclear Facilities.

Table 3.1-1, Basic Design Requirements Page 1 of 3

Principal Codes and Standards						
	Typical Equipment	**Applicable Codes & Standards**	**Design Class I (7)**	**Design Class II**	**Design Class IIIA**	**Design Class IIIB**
Structure/ Supports		DBE, DBT, ACI-318, AISC	X	(1), (2)	(1)	
		UBC, ANSI A58.1		X	X	X
		SITE SPECIFIC	(1)	(1)	(1)	(1)
Liquid and Process Air Handling Processing and Storage Equipment	Vessel	ASME VIII, NFPA (5)	X, (6)	X	(1)	(1)
	Piping and Valves Pumps	ANSI B31.1, NFPA (5)		X	X	(1)
		UPC				X
	Pumps	API-610, NFPA (5)	X	X	(1)	
	Storage & Tanks	API-650 or API-620	X	X		
	Heat Exchangers	ASME VIII, TEMA	X	X	(1)	(1)
	All Other Equipment	MFR's STD			X	X
Air Handling Ducting & Fans		ARI, SMACNA, AMCA	X, (3)	X, (3)	X, (3)	X
HVAC Filters	Pre Filters	ASHRAE 52.68	X, (3), (4)	X, (3)	X, (3)	X
	HEPA Filters	MIL F 51068C, ANSI N 509, ANSI N 510	X, (3)	X, (3)	X, (3)	X
Mechanical Handling Equipment	Crane & Related Equip.	CMAA	X	X	(1)	
		CMAA, AISC, AWS	X	X	(1)	
		MFR's STD			X	X
Instrumentation and Electrical		IEEE-NE	X			
		ANSI STDS or NEC	X	X	X	X
		MFR's STD		x	X	X

Table 3.1-1, Basic Design Requirements Page 2 of 3

Principal Codes and Standards						
	Typical Equipment	**Applicable Codes & Standards**	**Design Class I (7)**	**Design Class II**	**Design Class IIIA**	**Design Class IIIB**
Quality Assurance Program		ASME NQA-1 & SUPPLEMENTS	X	X	X	
		COMMERCIAL AND INDUSTRY PRACTICES				X

X - Minimum Requirements

NOTES
(1) Requirements shall be determined on case-by-case basis.
(2) Required for structure and supports needed for confinement and control of radioactivity.
(3) Except structures and supports that are designed to withstand DBE/DBT when specified in column 1 of this table. (See Section 3.2 for specific criteria.)
(4) Underwriter's Laboratory (UL) class I listed.
(5) For fire protection systems.
(6) ASME III for other class I vessels.
(7) Currently there are no Design Class I structures, systems, or components at the WIPP.

Definitions			
ACI-318	American Concrete Institute. Building Code Requirements for Reinforced Concrete (ACI-318-77)	ASHRAE 52.68	American Society of Heating, Refrigeration and Air Conditioning Engineers, Inc. Standard 52.68. Method of Testing Air Cleaning Devices Used in Central Ventilation for Removing Particulate Matter
AISC	Specification for Design Fabrication and Erection of Structural Steel for Buildings	ASME VII	American Society of Mechanical Engineers. Section VIII Division I Pressure Vessel
AMCA	Air Moving and Conditioning Association Fan Performance and Sound Testing Requirements AMCA 210.67 and 300	AWS	American Welding Society
ANSI B31.1	American National Standards Institute, Power Piping	CMAA	Crane Manufactures Association of America. Specification No. 70 Specification for Electric Overhead
ANSI A58.1	Building Code Requirements for Minimum Design Loads in Building and Other Structures	IEEE	Institute of Electrical and Electronic Engineers
ANSI N 509	Nuclear Power Plant Air Cleaning Units and Components	MFR'S STD.	A Commercial Catalogue Item Built to the Manufacturer's Design Standard
ANSI N 510	Testing of Nuclear Air Cleaning Systems	MIL-F-51068C	Military Specification, Fire Resistant High Efficiency Particulate Air Filters
API-610	American Petroleum Institute. Centrifugal Pumps for General Refinery Services	NFPA	National Fire Protection Association

Table 3.1-1, Basic Design Requirements Page 3 of 3

Principal Codes and Standards			
Definitions			
API-620	Recommended Rules for Design and Construction of Large, Welded Low and Pressure Storage Tanks	NEC	National Electrical Code
API-650	Welded Steel Tanks for Oil Storage Atmospheric Tanks	SMACNA	Sheet Metal and Air Conditioning Contractors National Association, Inc
ARI	Air Conditioning and Refrigeration Institute	TEMA	Tubular Exchanger Manufacturer's Association
ASME-NQA-1	1989 Edition, Quality Assurance Program for Nuclear Facilities	UBC	Uniform Building Code
		UPC	Uniform Plumbing Code. (American Standard National Plumbing Code ANSI A40.8)

This page intentionally left blank

3.2 Structural Design Criteria

3.2.1 Wind Loadings

The design wind velocity for Design Class II structures shall be 110 mi/hr (177 km/hr) at 30 ft (9.1 m) above ground. The wind velocity selected, with a 1,000-year mean recurrence interval, is adopted from the results of a site specific wind and tornado study.[1] The design wind velocity exceeds the basic wind velocity specified in American National Standard Institute (ANSI) Standard A58.1[2] for the geographical location of the WIPP facility.

The design wind velocity for Design Class III structures shall be 91 mi/hr (146.5 km/hr), with a 50-year mean recurrence interval, except for the Support Building and Exhaust Filter Building, which is 99 mi/hr (159.3 km/hr) with a 100-year mean recurrence interval.

3.2.1.1 Vertical Velocity Distribution and Gust Factors

The vertical velocity distribution used shall be as given in Section 6 of ANSI Standard A58.1[2] using exposure C (flat, open country; flat, open coastal belts; and grassland) for the design wind velocity, including the appropriate gust factors. The ANSI standard contains the effective wind velocity pressures for the overall design of structures in Table 5 of the standard. The ANSI standard contains the effective wind velocity pressures for the design of parts and portions of structures in Table 6, and the effective wind velocity pressures for calculating internal pressures in Table 12.

3.2.1.2 Determination of Applied Forces

The procedures used to convert the wind velocity into applied forces on structures shall be as outlined in ANSI Standard A58.1.[2] Velocity pressures shall be determined from the tables using the design wind velocity. The design wind loads shall be obtained by multiplying the effective velocity pressures by the appropriate pressure coefficients in Sections 6.5 through 6.9, in accordance with Section 6.4 of ANSI Standard A58.1.[2] The design wind loads for enclosed structures are shown in Table 3.2-1.

3.2.2 Tornado Loadings

Tornado loadings applicable to certain Design Class II surface facilities are described in the following sections. For purposes of structural design, the effects of a tornado are described in Section 3.0 of Bechtel topical report BC-TOP-3-A.[3]

3.2.3 Applicable Design Parameters

Tornado-resistant structures shall be designed for tornado loadings (not coincident with any accident condition or earthquake) as outlined in Sections 3.3 and 3.4 of BC-TOP-3-A.[3] The parameters used for the DBT are the result of a site-specific wind and tornado study for the WIPP facility,[1] and the loadings shall be calculated based on the following tornado characteristics:

Maximum wind speed (Including effects of suction vortices)	183 mi/hr	(294.5 km/hr)
Translational velocity	41 mi/hr	(66 km/hr)
Tangential velocity	124 mi/hr	(199.6 km/hr)
Radius of maximum wind	325 ft	(99 m)
Pressure drop	0.5 lb/in^2	(0.035 kg/cm^2)
Rate of pressure drop	0.09 $lb/in^2/s$	(0.006 $kg/cm^2/s$)

The above tornado parameters are based on a 1,000,000-year recurrence period, and the maximum wind speed shall be the vector sum of all velocity components.

3.2.3.1 Determination of Forces on Structures

The methods used to convert the tornado wind and atmospheric pressure change into forces and the distribution of these forces across the structures shall be as outlined in Section 3.5 of BC-TOP-3-A.[3] Combinations of loadings are discussed in Section 3.2.11.

The idealized pressure-time function shown in Figure 3.2-1 shall be used to determine the differential pressure loading resulting from atmospheric change. The atmospheric differential pressure, with a maximum value of 0.5 lb/in^2 (0.035 kg/cm^2), tends to force external surfaces of enclosed structures outward.

3.2.3.2 Plant Structures not Designed for Tornado Loads

Structures not resistant to tornados, whose collapse could result in the loss of required function of tornado-resistant structures, or systems that are under tornado loading conditions shall be analyzed for their mode of failure. This is to ensure that such a collapse does not cause any tornado-resistant structure or system to lose its intended function.

3.2.4 Water Level (Surface Flood) Design

The WIPP facility nominal grade elevation is more than 400 ft (122 m) above the probable maximum flood (PMF) level of the Pecos River, and the WIPP facility is separated from the river by about 12 mi (19.3 km) of gradually rising land. Since there are no perennial or intermittent streams near the WIPP facility that have the potential for sustained flooding of the site, neither buoyancy nor static water forces due to flood elevations shall be considered in the WIPP facility design.

3.2.4.1 Phenomena Considered in Design Load Calculations

Phenomena such as flood currents or wind-induced waves shall not apply, because the grades for the WIPP facility structures are more than 400 ft (122 m) above the PMF level on the Pecos River, and none of the local drainage ways has the potential for sustained flooding of the WIPP facility.

3.2.4.2 Flood Force Application

As stated previously, the WIPP facility structures are above the PMF level and are not subjected to flood loadings.

3.2.4.3 Flood Protection

Protection against the PMF level on the Pecos River shall not be required for WIPP facility SSCs.

The on-site storm drainage system shall be based on a minimum 10-year, 24 hour frequency storm. Culverts shall be designed to discharge a 25-year storm, utilizing the head available at entrance. At on-site roads, the static head shall not exceed the subgrade. Minimum design concentration time shall be five minutes. The site drainage system shall include and provide the following:

- Peripheral ditches
- Culverts
- Ditches
- Under drains

The design shall be such that local probable maximum precipitation does not flood any of the on-site facilities of Design Class IIIA and higher. Onsite stormwater retention basins have a design capacity to hold two consecutive 10-year, 24 hours storm events.

3.2.5 Groundwater Design

3.2.5.1 Groundwater Forces

Forces exerted by water in the geological formations overlying the salt shall be considered as lateral loads on the shafts caused by the piezometric heads in the water-bearing zones of the Rustler Formation, and shall be sealed to prevent seepage into the salt formations.

Surface water shall be prevented from entering the shafts by sloped shaft collars.

3.2.5.2 Design Loads

Groundwater forces shall be combined with other types of loads for structural design, as described in Section 3.2.11, Combined Load Criteria.

3.2.5.3 Protection From Groundwater

Shaft linings and structures shall minimize water seepage, and shall be designed against hydrostatic pressure since the water-bearing unit above the waste disposal level will not be drained. Chemical seals shall be constructed, as required, around the shafts, under the water-bearing unit area to minimize water migration to lower elevations, and water collection rings shall be provided to collect seepage that might enter through the shaft lining.

Since there are no significant sources of moisture or groundwater in the Salado Formation underground mined area, no additional humidity or moisture controls beyond those described shall be required.

3.2.6 Protection Against Dynamic Effects

To prevent plant equipment failures from generating internal missiles, rotating equipment shall be designed, wherever possible, to preclude that possibility. Equipment identified as potential missile sources shall be arranged and oriented so that any missile generated would impact a structure or barrier capable of withstanding that impact, preventing damage to Design Class II SSCs.

3.2.7 Seismic Design

Design Class II confinement SSCs shall be designed to withstand a Design Basis Earthquake (DBE). The DBE, based on a 1,000-year earthquake has been established through a seismic study of the WIPP facility region, as discussed in Chapter 2. This section summarizes the seismic input from Chapter 2, and describes the methods and procedures of seismic analysis.

3.2.7.1 Input Criteria

The maximum ground acceleration for the DBE is 0.1g in both horizontal and vertical directions, and shall be used in analysis and design of surface facilities and equipment. As described in Chapter 2, several WIPP facility region seismic zone characterizations have been taken into account in establishing the maximum ground motion.

3.2.7.1.1 Design Response Spectra

The design response spectra for horizontal and vertical components of the DBE shown in Figure 3.2-2 and Figure 3.2-3, are based on a statistical analysis of the existing strong ground motion earthquake records of various durations, recorded at sites having various geologic conditions and located at various epicentral distances.

3.2.7.1.2 Derivation of Design Response Spectra

Synthetic earthquake time histories shall not be required for seismic design of the WIPP facility since actual response spectra were used.

3.2.7.1.3 Critical Damping Values

The range of damping values (percent of critical) for SSCs shall be as given in Sections 2.2 and 3.2 of BC-TOP-4-A,[4] and are shown in Table 3.2-2.

Damping values of soil and foundation materials are determined by laboratory tests.

The formulas used to determine the equivalent foundation damping coefficient shall be as given in Section 3.3 of BC-TOP-4-A.[4] They are used when a lumped parameter approach is appropriate for soil structure interaction considerations.

3.2.7.1.4 Soil Supported Structures

The Design Class II surface structures shall be constructed either directly on caliche or compacted sandstone, or on a sand layer above the caliche. The foundation support materials shall be designed to withstand the pressures imposed by the appropriate loading combinations, with an adequate safety factor.

3.2.7.1.5 Soil-Structure Interaction

Structural systems affected by soil-structure shall be analyzed, as applicable, in accordance with Section 3.3 and Appendix D of BC-TOP-4-A.[4]

3.2.7.2 Seismic System Analysis

The structures and systems shall be designed for either DBE or Uniform Building Code[5] (UBC) earthquake loads, as specified in Section 3.1.3.

3.2.7.2.1 Seismic Analysis Method

Analytical methods used for seismic analysis shall be as described in Sections 1.0 and 3.0 of BC-TOP-4-A.[4]

The structural mode shapes and frequencies shall be calculated for the models for the fixed base cases. Whenever appropriate, foundation structure interaction shall be analyzed in accordance with the methods given in Section 3.3 of BC-TOP-4-A.[4] A response spectrum analysis shall be conducted for the structure using the above calculated parameters. The results of the analysis shall include acceleration, displacements, shears, moments, and other related information necessary for structural design. Design allowables shall be as given in Section 3.2.11 of this document, for the various loading combinations including seismic loadings.

The simplified method of analysis shall be used for frame type structures in lieu of the analytical method described above. The simplified method shall be acceptable for verifying the structural integrity of frame structures that can be represented by a simple model. No determination of natural frequencies shall be made, but rather the design acceleration shall be assumed to be 1.5 times the peak of the required response spectrum.

3.2.7.2.2 Methods Used to Couple Soil with Seismic Structures

If a detailed design and soil investigation determines that a structure is founded on a sand layer of a depth comparable to its plane dimension, foundation impedances based on elastic half-space theory shall be developed and used to account for the soil-structure interaction as described in Section 3.3.1, of BC-TOP-4-A.[4]

3.2.7.2.3 Development of Floor Response Spectra

A simplified method shall be used to generate the approximate floor response spectra without the need of performing a time history analysis of structures. The method used shall be as developed by Tsai and Tseng,[6] which derives spectrum peak envelopes from the design response spectra shown in Figure 3.2-2 and Figure 3.2-3. Subsequently, the floor response spectra for equipment design shall be developed using these peak envelopes and the frequencies of the soil-structure systems.

3.2.7.2.4 Effects of Variations on Floor Response Spectra

Section 5.2 of BC-TOP-4-A[4] describes the various considerations that shall be used in the seismic analyses, including the effects on floor response spectra of expected variations of structural properties, damping, soil properties, and foundation-structure interaction. These calculations shall include the details of the effects of variations on the floor response spectra.

3.2.7.2.5 Use of Constant Vertical Load Factors

The method of analysis used for both the vertical and horizontal directions shall be the re-spectrum method. The induced forces, moments, and resulting stresses due to motions in the vertical and the two horizontal directions shall be combined by the square root of the sum of the squares (SRSS) technique.

3.2.7.2.6 Method Used to Account for Torsional Effects

Torsional effects, if significant, shall be included in the horizontal models at locations of major mass and/or structural eccentricity. The techniques in Section 3.2 and Appendix C of BC-TOP-4-A[4] shall be used to account for torsional effects.

3.2.7.2.7 Analysis Procedure for Damping

The analysis procedure employed to account for damping in various elements of the model of a coupled system shall be as described in Sections 3.2 and 3.3 of BC-TOP-4-A,[4] including the criteria for evaluating the composite model damping of the system, and accounting for the damping of various structural elements and foundations.

3.2.7.3 Seismic Subsystem Analysis

This section covers the seismic analysis of Design Class II equipment and subsystems essential to confinement.

3.2.7.3.1 Determination of the Number of Earthquake Cycles

During the plant life, one DBE shall be assumed to occur. For the DBE, about 10 maximum stress cycles shall be assumed to be induced in the SSCs, and the SSCs shall be designed on the basis of analytical results. In general, the design of structures and equipment for the WIPP facility shall not be fatigue controlled since most stress and strain changes occur only a small number of times, or produce only minor stress-strain fluctuations or both. Earthquake and Design Basis Accident (DBA) full-design strains occur too infrequently and with too few cycles to generally require fatigue design of structures and equipment.

3.2.7.3.2 Basis for the Selection of Forcing Frequencies

Structural fundamental frequencies shall be calculated in accordance with Section 4.2.1 of BC-TOP-4-A.[4]

3.2.7.3.3 Root-Mean Square Basis

The term "root-mean square basis" used for a combination of modal responses shall be the same equation as SRSS given as follows:

$$Q\ max = (Q_1{}^2\ max + Q_2{}^2\ max + ... + Q_n{}^2\ max)^{1/2}, \text{ where } Q\ max = SRSS$$

3.2.7.3.4 Procedure for Combining Modal Responses

The procedure for combining modal responses (shear, moments, stresses, and deflections or accelerations or both) when a response spectrum modal analysis is used, shall be as follows:

- The SRSS method of combining modal responses shall be used, if modes are not closely spaced.
- All significant modes up to 33 Hz shall be used in the analysis; however, the lowest three modes shall always be used. Above 33 Hz the element acts as a rigid body, and the calculations would be trivial.
- Where closely spaced frequencies of two or more modes occur, these modal responses shall be combined in an absolute sum; the resulting sum is treated as that of a pseudo-mode, then combined with the remaining modes by SRSS.

3.2.7.3.5 Significant Dynamic Response Modes

Seismic designs of subsystems (i.e., floor or wall-mounted components, etc.) shall be based on modal analysis by using the appropriate floor response spectra and the procedures in Section 3.2.7.2.3. The static loads equivalent to the peak of the floor spectrum curve shall be used only for: (1) a subsystem that can be idealized as a single degree-of-freedom system, or (2) a multiple degree-of-freedom system whose fundamental frequency is far from all the other natural frequencies. In such cases, only the fundamental mode shall be considered.

3.2.7.3.6 Basis for Computing Combined Response

The basis for the methods used to determine the possible combined (two-component) horizontal and vertical amplified response loading for seismic design of equipment, including the effect of seismic response of the supports, equipment, and structures and components, shall be as described in BC-TOP-4-A.[4]

3.2.7.3.7 Amplified Seismic Responses

The dynamic analysis method used to analyze subsystems shall be as described in Section 3.2.7.2.1.

3.2.7.3.8 Modal Period Variation

The peaks of floor response spectra shall be widened, by an amount to be determined by the procedure given in Section 5.2 of BC-TOP-4-A,[4] on both sides of the peak, to account for modal period variations due to the variation of structural and foundation properties and idealization in mathematical modeling.

3.2.7.3.9 Torsional Effects of Eccentric Masses

The torsional effects of valves and other eccentric masses shall be included.

3.2.7.3.10 Seismic Analysis for Overhead Cranes

All overhead cranes used for waste handling shall have seismic retainer attachments to prevent them from dislodging during a seismic event.

3.2.8 Snow Loadings

Design Class II structures shall be designed for a snow load of 27 lb/ft.^{2} (0.013 kg/cm^2)

The design snow load is derived by using the 100-year recurrence snow load of 10 lb/ft^2 (0.005 kg/cm^2) specified in ANSI Standard A58.1,[2] and by determining the quantity of standing water from winter precipitation required to arrive at a threshold condition.

Roof snow loads shall be calculated by multiplying the design snow load by the appropriate coefficients (C_s) specified in Figure 5, Figure 6, and Figure 7 of ANSI A58.1.[2]

In the combined loading calculations given in Section 3.2.11, the roof snow loads shall be used in place of the minimum roof live load, where such loading is more critical in governing the design.

3.2.9 Equipment and Materials-Derived Loads

Equipment and materials-derived loads in this section are discussed by first defining loading

nomenclature, then presenting the loading criteria.

3.2.9.1 Nomenclature

D Dead Load - The dead load shall consist of the weight of the structure, permanent equipment, piping, conduits, cables, and other permanent static loads.

L Live Load - The live load shall consist of uniformly distributed occupancy loads, moving vehicle loads, crane or its related equipment loads, snow and ice loads, and other loads which vary with intensity and occurrence. The minimum uniformly distributed live loads, concentrated loads, and minimum roof live loads shall be those specified in ANSI A58.1,[2] Table 1, Table 2, and Table 3. The live load arrangement design shall use the highest stresses in the supporting members. Structures carrying live loads that can induce dynamic, vibratory, or impact forces shall be designed for those forces, as specified in Section 3.4 of the ANSI A58.1,[2] or as determined by appropriate analysis.

S Snow Load - A snow load shall be used in the design of structures, and shall be applied in accordance with Section 7 of ANSI A58.1.[2] Snow load shall be used instead of roof live load, when such loading is more critical to the design.

W Wind Load - A wind speed of 110 mi/h (176 km/h), with a 1,000-year mean recurrence interval, shall be used in the design of Design Class II structures. A wind speed of 99 mi/hr (158 km/hr), with a 100-year mean recurrence interval, shall be used in the design of the structural portions of the Support Building, Exhaust Filter Building, and Building 412. All other Design Class IIIA and IIIB structures shall be designed for a basic wind speed of 91 mi/hr (145.6 km/hr) with a 50-year mean recurrence interval. Conversion of wind speed to wind pressure shall be per Sections 6.1 thru 6.11 of ANSI A58.1[2] and the DOE Guide for Calculation of Design Wind Pressures,[7] Sections A and B.

W_t Total Tornado Load - The loads generated by the design basis tornado, W_t, shall include the effect of tornado wind and pressure differential. The most critical case of the following combinations governs the design.

W_t = Tornado Wind Load (W_w)
W_t = Tornado Differential Pressure (W_p)
$W_t = W_w + 0.5\ W_p$

E′ Seismic Load - Load generated by the DBE.

F Hydrostatic Load - Vertical liquid pressure shall be considered as dead load with regard to variation in liquid depth.

H Soil Pressure - Structures or parts of structures which retain fills, excluding shafts, shall be proportioned to withstand the lateral soil pressure, as given in the WIPP Soils Design Report - Volume I, DR-22-V-01.[8]

Salt Creep - Provisions shall be made for eliminating or accommodating stresses, deformations, and/or movements in structures, such as brattice walls, bulkheads, etc., adjacent to the salt. An adequate gap shall be provided between the salt and structure to accommodate creep effect. For structures, walls, or bulkheads that require sealing, the gap shall be bridged with a fire-resistant or noncombustible flexible material.

T Thermal Load - Provisions shall be made for stresses, deformations, or movements resulting from

variations in temperature. For surface structures, the ambient temperature rise or fall from that at the time of erection, is assumed to be 60°F (15.6°C) for metal structures and 40°F (4.5°C) for concrete or masonry structures. For underground structures, the ambient temperature rise or fall from that at the time of erection is assumed to be 30°F (-1.1°C) for metal structures and 20°F (-7.5°C) for concrete structures.

3.2.10 Thermal Loadings (Salt)

Waste shall be emplaced so thermal loading (heat generation) does not exceed an average of 10 kW/acre (24.7 kW/hectare).[9] Thermal analyses of geologic waste isolation in salt,[9] show that more than 150 kW (142.3 BTU/s) of heat generating waste can be emplaced in an acre of a storage facility without unacceptable impacts on the salt beds or the surrounding environment. However, a conservative design limit of 10 kW/acre (24.7 kW/hectare) shall be established.

3.2.11 Combined Load Criteria

Design Class II confinement structures and supports shall be designed for dead, live, thermal, wind, earthquake, tornado, and soil pressure loads.

The Design Class III structures, and those Design Class II structures and supports not required for confinement, shall be designed in accordance with the UBC.[5]

3.2.11.1 Nomenclature

Nomenclature is defined in Section 3.2.9.1, and additional symbols related to the design of steel and concrete structures shall be defined as follows:

Note: The 33 percent increase in allowable stresses for concrete and steel due to seismic or wind loadings shall not be permitted.

S For steel structures, S shall be the required strength based on the elastic design method and the allowable stresses defined in Part I of the American Institute of Steel Construction (AISC) Specification.[10]

U For concrete structures, U shall be the required strength to resist the design loads. This is based on the strength design method described in America Concrete Institute Standard 318-77.[11]

3.2.11.2 Load Combinations

3.2.11.2.1 Design Requirements

All structures shall be designed to have strengths at all sections at least equal to the structural effects of the design loads as listed in Table 3.2-3 in such combinations as shown below.

<u>Design Class II - Reinforced Concrete Structures</u>

$U = 1.4D + 1.4F + 1.7L + 1.7H$
$U = 1.4D + 1.4F + 1.7L + 1.7H + 1.7W$
$U = 1.05D + 1.05F + 1.3L + 1.3H + 1.3T$
$U = 1.05D + 1.05F + 1.3L + 1.3H + 1.3W + 1.3T$
$U = D + F + L + H + T + E'$
$U = D + F + L + H + T + W_t$

Design Class II - Steel Structures

$S = D + L$
$S = D + L + W$
$1.5S = D + L + T$
$1.5S = D + L + T + W$
$1.6S = D + L + T + E'$
$1.6S = D + L + T + W_t$

Where the structural effects of differential settlement may be significant, it shall be included with the dead load (D) in load combination. An estimation of this effect shall be based on a realistic assessment of such effect occurring in service. When any load reduces the effects of other loads, the corresponding coefficient for that load shall be taken as 0.9, if it can be demonstrated that the load is always present or occurs simultaneously with the other loads, else the coefficient for that load shall be taken as zero.

Design Class IIIA - Reinforced Concrete and Steel Structures

Design Class IIIA structures shall be designed in accordance with the provisions of UBC,[5] except that the design loads shall comply with ANSI A58.1,[2] unless otherwise specified in Table 3.2-3.

Design Class IIIB - Reinforced Concrete, Steel, and Masonry Structures

Design Class IIIB structures shall be designed in accordance with the provisions of UBC,[5] except that the design loads shall comply with ANSI A58.1,[2] unless otherwise specified in Table 3.2-3.

Design Class IIIB - Pre-engineered Metal Building Structures

The pre-engineered metal building shall be designed in accordance with the Metal Building Systems Manual of Metal Building Manufacturers Association,[12] except that the design loads shall comply with ANSI A58.1[2] with the following exceptions:

Wind load shall be calculated based on a basic wind speed, V, of 91 mi/h (145.5 km/h). For building height less than 30 ft (9.15 m), the effective velocity pressures q_F, q_M, and q_P in ANSI A58.1,[2] shall be reduced using the following formulas.

$q_F = 0.00268\ V^2\ (H/30)^{2/7}$
$q_M = 0.00246\ V^2\ (H/30)^{2/7}$
$q_P = 0.00377\ V^2\ (H/30)^{2/7}$

Where H = Mean height of the roof or 15 ft (4.6 m), whichever is greater.

Seismic load shall be in accordance with the requirements set forth in UBC,[5] Seismic Zone No. 1.

Snow load shall be calculated based on a basic snow load of 10 lb/ft^2 (0.005 kg/cm^2).

3.2.11.2.2 Minimum Factors of Safety with Respect to Overturning, Sliding, and Floatation

In addition to the above load combinations, the following combinations and factors of safety shall apply to structures when being checked for overturning, and sliding:

Minimum Factors of Safety

Load Combination	Overturning	Sliding
D+H+W	1.5	1.5
D+ H+E′	1.1	1.1
D+ H+W_t	1.1	1.1

Where Section 3.2.9.1 describes H, D, E′, W, and W_t except that, for conservatism, only the weight of a structure and the components permanently attached to it shall be accounted for in D. The factor of safety against floatation, defined as the ratio of dead load divided by the hydrostatic uplift, shall be 1.1 minimum.

3.2.12 Soil Erosion Control

The design control measures to minimize soil erosion and to control sediment-laden runoff at the WIPP facility shall be in accordance with the amended Water Control Commission regulations, Water Quality Control Commission, State of New Mexico, and applicable federal regulations.

References for Section 3.2

1 The University of Chicago, SMPR Research Paper No. 155, A Site Specific Study of Wind and Tornado Probabilities at the WIPP Site in Southeast New Mexico, UN000075, February 1978.

2 ANSI A58.1-1972, American National Standard Building Code Requirements for Minimum Design Loads in Buildings and other Structures.

3 BC-TOP-3-A, Tornado and Extreme Wind Design Criteria for Nuclear Power Plants, August 1974.

4 BC-TOP-4-A, Seismic Analyses of Structures and Equipment for Nuclear Power Plants, November 1974.

5 Uniform Building Code, 1979 edition.

6 Tsai and Tseng, Standardized Seismic Design Spectra for Nuclear Plant Equipment, Nuclear Engineering and Design, Vol. 45, UN000169, 1978.

7 DOE Guide for Calculation of Design Wind Pressures.

8 DR-22-V-01, WIPP Soils Design Report, Volume I, Bechtel, Inc., 1979.

9 Y/OWI/SUB-76/07220, The Selection and Evaluation of Thermal Criteria for a Geological Waste Isolation Facility in Salt, Science Applications, Incorporated, Oak Ridge, TN, September 1976.

10 American Institute of Steel Construction, Specification for Design, Fabrication, Erection of Structural Steel for Buildings, November 1978.

11 American Concrete Institute Standard 318-77, Building Code Requirement for Reinforced Concrete, December 1977.

12 Metal Building Systems Manual of Metal Building Manufacturers Association, Cleveland, OH.

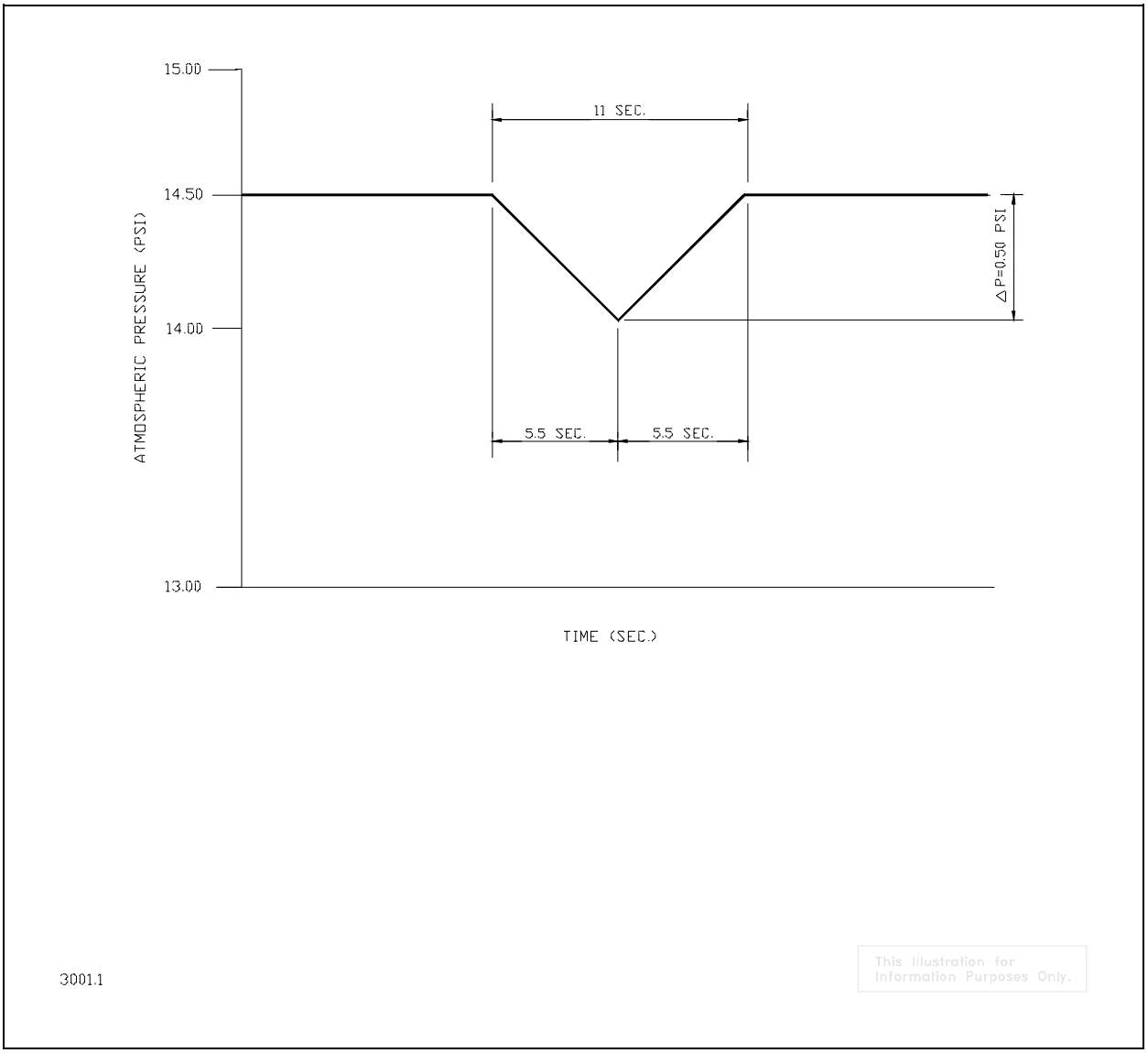

Figure 3.2-1, Idealized Function of Atmospheric Pressure Change vs. Time

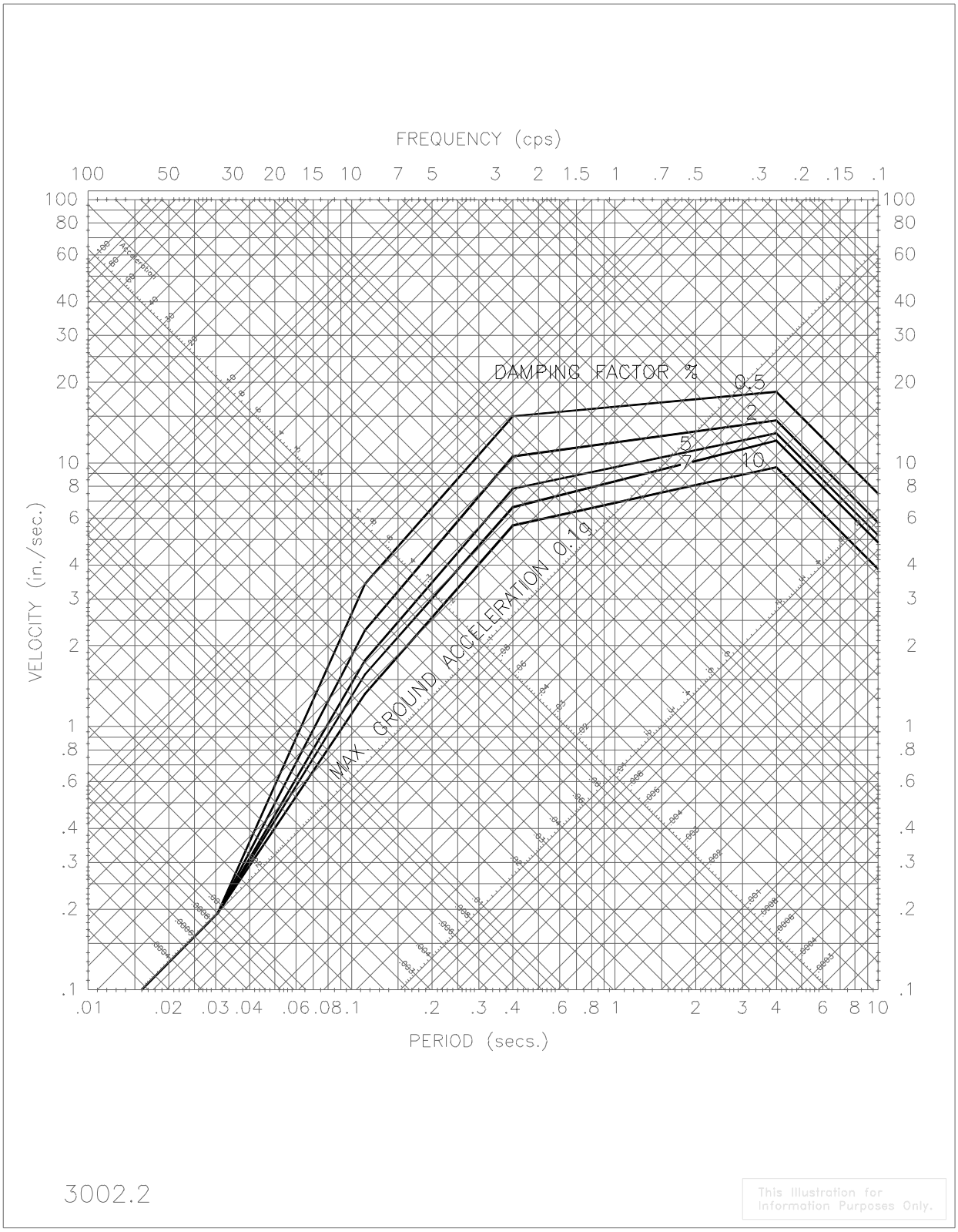

Figure 3.2-2, Horizontal Design Response Spectra

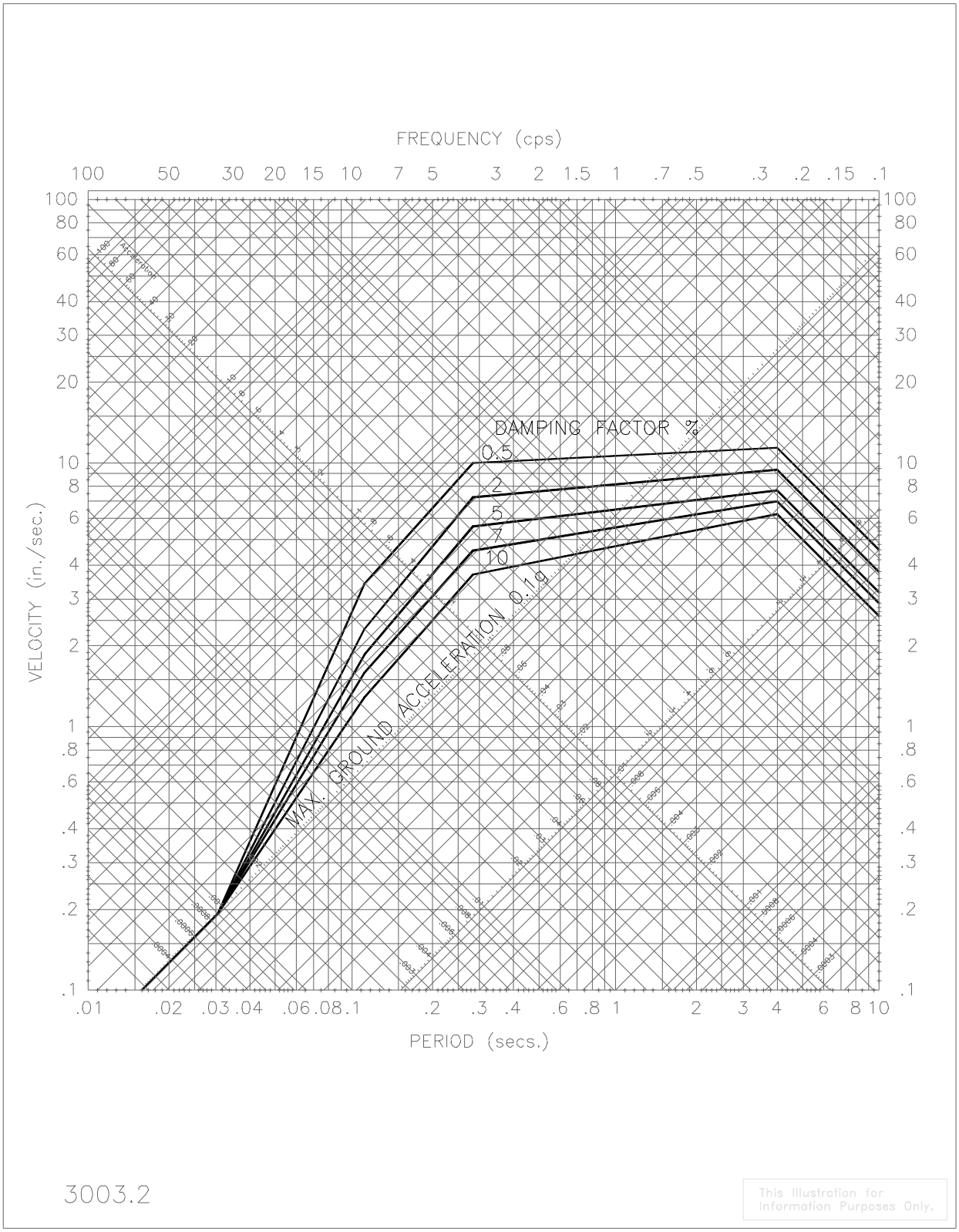

Figure 3.2-3, Vertical Design Response Spectra

Table 3.2-1, Design Wind Load (Enclosed Structures Subjected to 110 mi/h Wind)

	Height, ft (m)	Windward, lb/ft^2 (kg/m$^{2)}$)	Leeward, lb/ft^2 (kg/m^2)	Roof, lb/ft^2 (kg/m^2)	Sides, lb/ft^2 (kg/m^2)	Limitations
External	0-29 (0-8.8)	+26(+127)	-19 (-93)	-22 (-107)	-22 (-107)	Height/Width< 2.5
	30-49 (9.1-14.9)	+35(+171)	-26 (-127)	-25 (-122)	-25 (-122)	Height/Length <2.5
	50-99 (15.2-30.2)	+40(+195)	-30 (-146)	-35 (-171)	-35 (-171)	
	1 0 0 - 1 4 9 (30.5-45.4)	+45(+220)	-34 (-166)	-39 (-190)	-39 (-190)	
Internal Pressure	0-29 (0-8.8)	-9 (-44)	-9 (-44)	-9 (-44)	-9 (-44)	No Openings
	30-49 (9.1-14.9)	-10 (-49)	-10 (-49)	-10 (-49)	-10 (-49)	
	50-99 (15.2-30.2)	-12 (-59)	-12 (-59)	-12 (-59)	-12 (-59)	
	1 0 0 - 1 4 9 (30.5-45.4)	-14 (-68)	-14 (-68)	-14 (-68)	-14 (-68)	
Internal Vacuum	0-30 (0-9.1)	+9 (+44)	+9 (+44)	+9 (+44)	+9 (+44)	No Openings
	30-50 (9.1-15.2)	+10 (+49)	+10 (+49)	+10 (+49)	+10 (+49)	
	5 0 - 1 0 0 (15.2-30.5)	+12(+59)	+12(+59)	+12(+59)	+12(+59)	
	1 0 0 - 1 5 0 (30.5-45.7)	+14(+68)	+14(+68)	+14(+68)	+14(+68)	

Sign convention:
+ Inward force
- Outward force

Table 3.2-2, Damping Values of SSCs for Design Basis Earthquake

Structure or Component	Damping Value % of Critical Damping
Welded steel structures	4
Bolted steel structures	7
Reinforced concrete structures	7
Equipment and large diameter piping systems, pipe diameter greater than 12 in (30.5 cm)	3
Small diameter piping systems, diameter equal to or less than 12 in (30.5 cm)	2
Prestressed concrete structures	5

Table 3.2-3, Design Loads for Surface Structures[1]

DESIGN CLASS	STRUCTURE	SEISMIC DBE	SEISMIC UBC	TORNADO DBT	SNOW lb/ft^2	WIND mi/hr
Class II	Waste Handling Building	X[2]		X	27	110
Class II	Station A	X		X	27	110
Class IIIA	Support Building	(3)	X	(3)	10	99
Class IIIA	Exhaust Filter Building		X		10	99
Class IIIA	Building 412	(3) X		(3)	27	110
Class IIIB	Warehouse/Shops Building		X		10	91
Class IIIB	Water Pumphouse		X		10	91
Class IIIB	SH Shaft Hoist House & Electrical Room		X		10	91

Notes:
(1) For definition of various loads, see Section 3.2.9.1.
(2) "X" indicates applicable load.
(3) The main lateral force resisting members of the Support Building and Building 412 shall be designed for DBE and DBT to protect the Waste Handling Building from structural failure.

3.3 Safety Protection Criteria

3.3.1 Confinement Requirements

The regulatory requirements for confinement applicable to the WIPP are defined in DOE Order O420.1,[1] Facility Safety. Confinement systems for the WIPP shall be designed to the pertinent provisions of DOE Order O 420.1,[1] Facility Safety, and shall accomplish the following:

- Minimize the spread of radioactive and other hazardous materials within the unoccupied process areas
- Prevent, if possible, or minimize the spread of radioactive and other hazardous materials to occupied areas
- Minimize the release of radioactive and other hazardous materials in facility effluents during normal operation and anticipated operational occurrences
- Limit the release of radioactive and other hazardous materials resulting from Design Basis Accident (DBAs) including severe natural phenomena and man-made events, in compliance with the guidelines contained in DOE Order O 420.1,[1] Section 4.1.1.2, Design Requirements

The ventilation system of a confinement system shall maintain airflow into the containment rooms or areas of a building to ensure that the airflow is from non-contaminated areas to potentially contaminated areas, and then to areas potentially at higher levels of contamination.

Confinement systems for the WIPP shall be designed to specific provisions of DOE O 420.1,[1] Facility Safety, as follows:

- The primary confinement shall consist of the waste containers
- The secondary confinement system shall consist of the buildings/structures and associated ventilation systems that enclose the primary confinement, and which are identified in Section 4.4
- The tertiary confinement shall be the natural geologic setting

The secondary confinement shall be designed to ensure that it can withstand the effects of severe natural phenomena and man-made events, including DBAs, and remain functional to the extent that the guidelines in DOE Order O 420.1,[1] Section 4.1.1.2, Design Requirements, are not violated.

3.3.2 Fire Protection

The WIPP fire protection system shall be designed in conformance with the design criteria set forth in DOE Order O 420.1, Facility Safety,[1] and 30 CFR 57.[2] The fire protection system design shall conform to provisions of the following codes and standards, as applicable.

- National Fire Codes of the National Fire Protection Association (NFPA)
- Loss prevention data sheets of Factory Mutual Research Corporation
- Uniform Building Code (UBC)

3.3.3 Radiological Protection

The WIPP facility shall use design considerations that assure and maintain radiation exposures as low as reasonably achievable (ALARA) to the general public and workers. These considerations shall be consistent with the intent of the Radiological Control Manual, DOE/EH-0256T,[3] 10 CFR 835,[4] and recommendations of Nuclear Regulatory Commission (NRC) Regulatory Guides 8.8[5] and 8.10.[6]

3.3.3.1 Controlled Areas

Entrance to and exit from controlled areas within the WIPP facility shall be implemented in accordance with the WIPP Radiation Safety Manual.[7]

3.3.3.2 High Radiation Areas

All high radiation areas shall be designed with access control and warning devices in accordance with the requirements set forth in DOE/EH-0256T[3] and 10 CFR 835.502.[4]

3.3.3.3 Shielding

The shielding design basis shall be to limit the maximum exposure to an individual worker to one-fifth of the annual occupational external exposure limits specified in 10 CFR 835.[4] Within the design basis, personnel exposures shall be maintained ALARA. Specifically, the shielding shall be designed to limit the occupational exposure during normal operation to the administratively selected limit of 1 rem/yr (10 mSv/yr) Total Effective Dose Equivalent (TEDE) for operating personnel.

The integrity, design, and performance of concrete shielding shall be assured by adherence to the requirements and practices recommended in ANSI N 101.6-1972, Concrete Radiation Shields.[8]

3.3.3.4 Nuclear Criticality Safety

Criticality safety requirements shall be considered for the WIPP in accordance with DOE O 420.1.[1] The basic elements and control parameters of programs for nuclear criticality invoked by the DOE order are the American Nuclear Society's ANSI/ANS nuclear criticality safety standards listed below:

ANSI/ANS-8.1[9]	Nuclear Criticality Safety in Operations with Fissionable Materials Outside Reactors
ANSI/ANS-8.3[10]	Criticality Accident Alarm System
ANSI/ANS-8.5[11]	Use of Borosilicate-Glass Raschig rings as a Neutron Absorber in Solutions of Fissile Material
ANSI/ANS-8.7[12]	Guide for Nuclear Criticality Safety in the Storage of Fissile Materials
ANSI/ANS-8.15[13]	Nuclear Criticality Control of Special Actinide Elements
ANSI/ANS-8.19[14]	Administrative Practices for Nuclear Criticality Safety

3.3.4 Industrial and Mining Safety

The WIPP surface SSCs shall be primarily designed to comply with the occupational safety and health program requirements of DOE Order 5483.1A,[15] and the Occupational Safety and Health Administration requirements of 29 CFR 1910[16] and 29 CFR 1926[17] to minimize the potential for industrial accidents.

The WIPP hoists and underground systems and equipment shall be primarily designed in conformance with the requirements of Mine Safety and Health Administration 30 CFR 57[2] and the New Mexico Mine Safety Code For All Mines.[18]

References for Section 3.3

1 DOE O 420.1, Facility Safety.

2 30 CFR 57, Safety and Health Standards - Underground Metal and Nonmetal Mines, 1977.

3 DOE/EH-0256T, Radiological Control Manual, June 1992.

4 10 CFR 835, Occupational Radiation Protection, December 1993.

5 Nuclear Regulatory Commission Regulatory Guide 8.8, Information Relevant to Ensuring Occupational Radiation Exposure As Low As Is Reasonably Achievable (Nuclear Power Reactors), March 1979.

6 Nuclear Regulatory Commission Regulatory Guide 8.10, Operating Philosophy for Maintaining Occupational Radiation Exposure As Low As Is Reasonably Achievable, September 1975.

7 WP 12-5, WIPP Radiation Safety Manual.

8 ANSI N101.6-1972, Concrete Radiation Shields, December 1972.

9 ANSI/ANS-8.1, Nuclear Criticality Safety in Operations with Fissionable Materials Outside Reactors, 1983.

10 ANSI/ANS-8.3, Criticality Accident Alarm System, 1986.

11 ANSI/ANS-8.5, Use of Borosilicate-Glass Raschig Rings as a Neutron Absorber in Solutions of Fissile Material, 1986.

12 ANSI/ANS-8.7, Guide for Nuclear Criticality Safety in the Storage of Fissile Materials, 1975.

13 ANSI/ANS-8.15, Nuclear Criticality Control of Special Actinide Elements, 1981.

14 ANSI/ANS-8.19, Administrative Practices for Nuclear Criticality Safety, 1984.

15 DOE Order 5483.1A, Occupational Safety and Health Program for DOE Contractor Employees at Government Owned Contractor Operated Facilities, June 22, 1983.

16 29 CFR 1910, Occupational Safety and Health Standards, 1970.

17 29 CFR 1926, Safety and Health Regulations for Construction, 1979.

18 New Mexico Institute of Mining Technology, New Mexico Safety Code for All Mines, 1990.

FACILITY DESIGN AND OPERATION
TABLE OF CONTENTS

SECTION	TITLE	PAGE NO.
4.1	Summary Description	4.1-1
	References for Section 4.1	4.1-2
4.2	Facility Design	4.2-1
4.2.1	Surface Structures	4.2-1
4.2.1.1	Waste Handling Building	4.2-1
4.2.1.1.1	RH TRU Waste Handling Areas	4.2-2
4.2.1.1.2	Building 412	4.2-19
4.2.1.1.3	WHB Support Areas	4.2-19
4.2.1.1.4	Waste Handling Building Effluent Monitoring System	4.2-20
4.2.1.2	Exhaust Filter Building	4.2-20
4.2.1.3	Water Pumphouse	4.2-20
4.2.1.4	Support Building	4.2-20
4.2.1.5	Support Structures	4.2-21
4.2.2	Shaft and Hoist Facilities	4.2-21
4.2.2.1	Shaft and Hoist General Descriptions	4.2-21
4.2.2.2	Shaft and Hoist General Features	4.2-22
4.2.2.3	Shaft and Hoist Specific Features	4.2-22
4.2.3	Subsurface Facilities	4.2-24
4.2.3.1	General Design	4.2-24
4.2.3.2	TRU Waste Disposal Area	4.2-25
4.2.3.3	Panel Closure System	4.2-27
	References for Section 4.2	4.2-30
4.3	Process Description	4.3-1
4.3.1	RH TRU Waste Receiving	4.3-1
4.3.2	72B Cask Waste Handling Process	4.3-1
4.3.2.1	Cask Preparation	4.3-1
4.3.2.2	Cask Unloading Room	4.3-2
4.3.2.3	Transfer Cell	4.3-2
4.3.2.4	Facility Cask Loading Room	4.3-2
4.3.3	10-160B Cask Waste Handling Process	4.3-4
4.3.3.1	Road Cask Preparation	4.3-4
4.3.3.2	Cask Unloading Room	4.3-4
4.3.3.3	Hot Cell	4.3-4
4.3.3.4	Transfer Cell	4.3-5
4.3.3.5	Facility Cask Loading Room	4.3-5
4.3.4	Waste Shaft Entry Room	4.3-6
4.3.5	Underground Transfer Area	4.3-6
4.3.6	RH TRU Waste Disposal	4.3-6
4.3.7	Process Interruption Modes	4.3-7
4.3.7.1	Routine Interruptions	4.3-7
4.3.7.2	Emergency/Abnormal Interruptions	4.3-7
4.3.8	WIPP Waste Information System	4.3-8

FACILITY DESIGN AND OPERATION
TABLE OF CONTENTS

SECTION TITLE PAGE NO.

4.3.8.1 72B RH TRU Waste Identification 4.3-9
4.3.8.2 10-160B RH TRU Waste Identification 4.3-9
4.3.9 Underground Mining Operations 4.3-9
4.3.9.1 Mining Method 4.3-9
4.3.9.2 Interface Between Mining and Waste Disposal Activities 4.3-10
4.3.9.3 Mined Material 4.3-10
4.3.9.4 Ground Control Program 4.3-10
4.3.9.5 Geotechnical Monitoring 4.3-15
References for Section 4.3 . . . . . 4.3-17

4.4 Confinement Systems 4.4-1
4.4.1 Waste Handling Building 4.4-1
4.4.2 Underground 4.4-2
4.4.3 Ventilation Systems 4.4-2
4.4.3.1 Surface Ventilation Systems in Controlled Areas 4.4-2
4.4.3.1.1 RH TRU Waste Handling Area 4.4-4
4.4.3.1.2 Mechanical Equipment Room 4.4-5
4.4.3.1.3 Waste Handling Shaft Hoist Tower 4.4-5
4.4.3.1.4 Exhaust Filter Building 4.4-6
4.4.3.2 Surface Support Structures Ventilation System 4.4-6
4.4.3.3 Subsurface Facilities Ventilation System 4.4-8
4.4.3.3.1 Natural Ventilation Pressure 4.4-11
4.4.3.3.2 Hot Weather NVP 4.4-11
4.4.3.3.3 Cold Weather NVP 4.4-12
References for Section 4.4 . . . . . 4.4-13

4.5 Safety Support Systems 4.5-1
4.5.1 Fire Protection System 4.5-1
4.5.1.1 Fire Water Supply and Distribution System 4.5-2
4.5.1.2 Fire Suppression System/Fire Detection and Alarm System 4.5-2
4.5.1.3 Radio Fire Alarm Reporter System 4.5-2
4.5.1.4 Fire Protection System Design, Installation, Testing and Maintenance . . 4.5-3
4.5.2 Plant Monitoring and Communications Systems 4.5-3
4.5.2.1 Central Monitoring System 4.5-3
4.5.2.2 Plant Communications 4.5-4
4.5.2.3 Radiation Monitoring System 4.5-5
References for Section 4.5 . . . . . 4.5-6

4.6 Utility and Auxiliary Systems 4.6-1
4.6.1 Electrical System 4.6-1
4.6.1.1 Normal Power Source 4.6-1
4.6.1.2 Backup Power Source 4.6-2
4.6.1.3 Uninterruptible Power Supply (Essential Loads) 4.6-2
4.6.1.4 Safety Considerations and Controls 4.6-3
4.6.2 Compressed Air 4.6-3

FACILITY DESIGN AND OPERATION
TABLE OF CONTENTS

SECTION	TITLE	PAGE NO.
	4.6.3 Water Distribution System	4.6-4
	4.6.4 Sewage Treatment System	4.6-4
	References for Section 4.6	4.6-5
4.7	Radioactive Waste (Radwaste) and Hazardous Waste Management	4.7-1
	4.7.1 Liquid Radwaste System	4.7-1
	4.7.2 Solid Radwaste System	4.7-1
	4.7.3 Hazardous Waste System	4.7-2
	References for Section 4.7	4.7-3
4.8	Human Factors Engineering Considerations	4.8-1
	References for Section 4.8	4.8-3

FACILITY DESIGN AND OPERATION
LIST OF FIGURES

FIGURE	TITLE	PAGE NO.
Figure 4.1-1,	WIPP Site Boundary and Subdivisions	4.1-3
Figure 4.1-2a,	WIPP Surface Structures	4.1-4
Figure 4.1-2b,	Legend for Figure 4.1-2a	4.1-5
Figure 4.1-3,	Planned Disposal Horizon	4.1-6
Figure 4.2-1a	WHB Plan (Ground Floor)	4.2-31
Figure 4.2-1b	WHB Plan (Upper Floor)	4.2-32
Figure 4.2-2	Waste Transport Routes in the WHB	4.2-33
Figure 4.2-3	WHB (Sections)	4.2-34
Figure 4.2-4	RH TRU 72B Road Cask	4.2-35
Figure 4.2-5	RH TRU 10-160B Road Cask	4.2-36
Figure 4.2-6	140-Ton Crane Cask Lifting Yoke In Use	4.2-37
Figure 4.2-7	72B Road Cask on Transfer Car	4.2-38
Figure 4.2-8	10-160B Transfer Car	4.2-39
Figure 4.2-9	10-160B Cask Lid Lifting Fixture	4.2-40
Figure 4.2-10	RH TRU Canister Assembly	4.2-41
Figure 4.2-11	10-160 B 55-Gallon Drum Lift Device	4.2-42
Figure 4.2-12	Pictorial View of the RH TRU Surface Facilities	4.2-43
Figure 4.2-13	Shield Valve	4.2-44
Figure 4.2-14a	Details of Hot Cell	4.2-45
Figure 4.2-14b	Details of Hot Cell Cross Section at D-D	4.2-46
Figure 4.2-14c	Details of Hot Cell at Cross Section E-E	4.2-47
Figure 4.2-15a	Drum Carriage Lift Fixture	4.2-48
Figure 4.2-15b	Drum Carriage Lift Fixture and Carriages	4.2-49
Figure 4.2-16	Shielded Transfer Drawer	4.2-50
Figure 4.2-17	Transfer Cell Shuttle Car	4.2-51
Figure 4.2-18	Facility Cask	4.2-52
Figure 4.2-19	Facility Cask Transfer Car	4.2-53
Figure 4.2-20	Facility Cask Rotating Device	4.2-54
Figure 4.2-21	6.25-Ton Grapple Hoist	4.2-55
Figure 4.2-22	Facility Grapple	4.2-56
Figure 4.2-23	Telescoping Port Shield	4.2-57
Figure 4.2-24	Bell Shield and Block	4.2-58
Figure 4.2-25	Waste Transfer Machine Assembly Installed on the Alignment Fixture	4.2-59
Figure 4.2-26	Shield Plug Carriage	4.2-60
Figure 4.2-27	Strongback	4.2-61
Figure 4.2-28	RH Emplacement Configuration	4.2-62
Figure 4.2-29	Facility Cask Installed on the Waste Transfer Machine Assembly	4.2-63
Figure 4.2-30	Exhaust Filter Building	4.2-64
Figure 4.2-31	Waste Shaft and Hoist Arrangement	4.2-65
Figure 4.2-32	Shaft Pillar Area Layout and Ventilation Flows	4.2-66
Figure 4.2-33	Typical RH and CH Transuranic Mixed Waste Disposal Configuration	4.2-67
Figure 4.2-34	Typical Disposal Panel	4.2-68
Figure 4.2-35	Design of a Panel Closure System	4.2-69
Figure 4.3-1	72B RH TRU Process	4.3-18
Figure 4.3-2	10-160B RH TRU Process	4.3-19

FACILITY DESIGN AND OPERATION
LIST OF FIGURES

FIGURE	TITLE	PAGE NO.
Figure 4.3-3	72B RH TRU Road Cask on Trailer	4.3-20
Figure 4.3-4	RH TRU Waste Handling Facility Cask Unloading from Cage	4.3-21
Figure 4.3-5	Waste Emplacement Equipment	4.3-22
Figure 4.3-6	Installing Shield Plug	4.3-23
Figure 4.4-1a	WHB and TRUPACT Maintenance Facility	4.4-14
Figure 4.4-1b	Waste Handling Building	4.4-15
Figure 4.4-2a	WHB RH Handling HVAC Flow Diagram	4.4-16
Figure 4.4-2b	WHB RH Handling HVAC Flow Diagram	4.4-17
Figure 4.4-3	Waste Handling Shaft/Hoist Tower HVAC System Flow Diagram	4.4-18
Figure 4.4-4	Exhaust Filter Building HVAC Flow Diagram	4.4-19
Figure 4.4-5	Support Building CMR Area HVAC Flow Diagram	4.4-20
Figure 4.4-6	Underground Ventilation Air Flow Diagram	4.4-21
Figure 4.4-7	Main Fan and Exhaust Filter System Schematic	4.4-22
Figure 4.4-8	Typical Bulkhead Design and Components	4.4-23
Figure 4.4-9	Typical Room Barricade	4.4-24
Figure 4.6-1,	Electrical Distribution System	4.6-6
Figure 4.6-2a	13.8 kV Power Distribution System Single Line Diagram	4.6-7
Figure 4.6-2b	13.8 kV Power Distribution System Single Line Diagram	4.6-8

FACILITY DESIGN AND OPERATION
LIST OF TABLES

TABLE **TITLE** **PAGE NO.**

Table 4.1-1 Design Classes of Structures, Systems, and Components at the WIPP Facility 4.1-7
Table 4.6-1 Diesel Generator Load 4.6-9
Table 4.6-2 UPS Loads 4.6-10
Table 4.8-1 Human Factors Evaluation Requirements of Design Class II/IIIA SSCs 4.8-4

FACILITY DESIGN AND OPERATION

This Chapter provides an overview of (1) the design of the WIPP facility and associated principal structures, systems, and components (SSCs), and (2) the RH waste handling/emplacement process. Sufficient detail is provided to facilitate hazard identification and principal design and safety criteria selection.

As discussed in the General Plant Design Description[1] (GPDD), no Design Class I SSC exists at the WIPP. Design information is provided in this chapter only for those SSCs listed in Table 4.1-1 that have been designated as Design Class II, and IIIA in the GPDD. Design Class IIIB SSCs are briefly described only to the extent necessary to complete the overview of the facility design and operation. Detailed design information on each SSC may be found in the respective System Design Description (SDD). The methodology for establishing the design class and the basis for classification determination for SSCs can be found in Appendix C of the GPDD.

4.1 Summary Description

The WIPP facility is located in Eddy County about 26 miles east of Carlsbad, New Mexico, encompassing 10,240 acres (16 sections) within the site boundary (Figure 4.1-1).

The controlled zones and associated fenced-in areas are described in Chapter 2. The facility is divided into three basic groups: surface structures, shafts, and subsurface structures, shown on Figures 4.1-2a, 4.1-2b, and 4.1-3.

The WIPP facility surface structures accommodate the personnel, equipment, and support services required for the receipt, preparation, and transfer of waste from the surface to the underground. The surface structures are located in an area (approximately 35 acres) within a perimeter security fence (Figure 4.1-2a). RH TRU waste surface traffic flow is shown in Figure 4.1-2a.

The vertical shafts extending from the surface to the underground horizon are the waste shaft, the salt handling (SH) shaft, the exhaust shaft, and the air intake shaft (AIS). These shafts are lined from the shaft collar to the top of the salt formation (about 850 ft [259 m] below the surface), and are unlined through the salt formation. The shaft lining is designed to withstand the full piezometric water pressure associated with any water-bearing formation encountered.

The subsurface structures consist of the waste disposal area, the support area, and the north (experimental) area (Figure 4.1-3). The experimental area was deactivated in September 1996 (Portions of this area were re-entered for the permanent disposal of salt mined from Panel 2 and are being maintained open.

References for Section 4.1

1. U.S. Department of Energy, Waste Isolation Pilot Plant, General Plant System Design Description (GPDD).

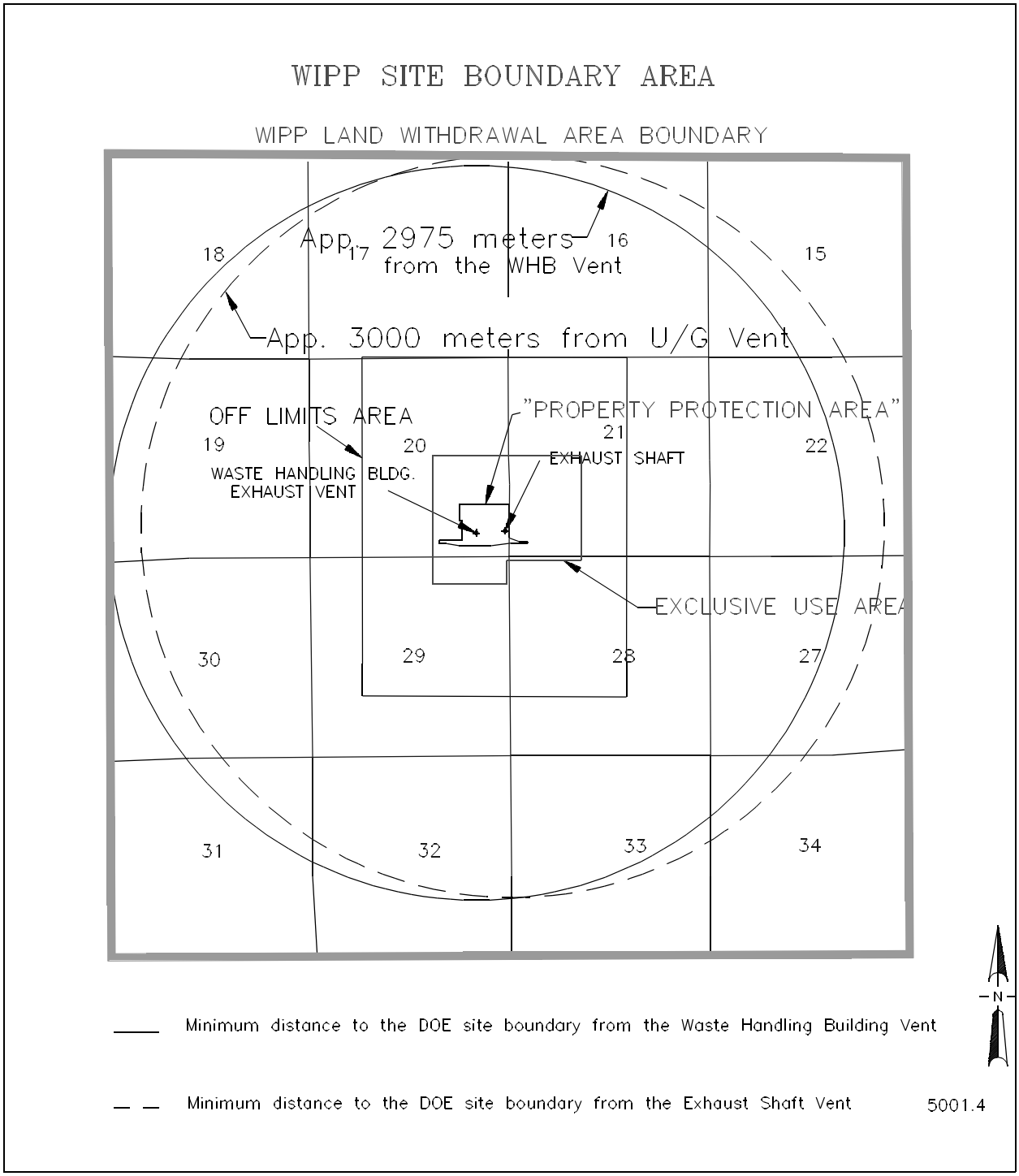

Figure 4.1-1, WIPP Site Boundary and Subdivisions

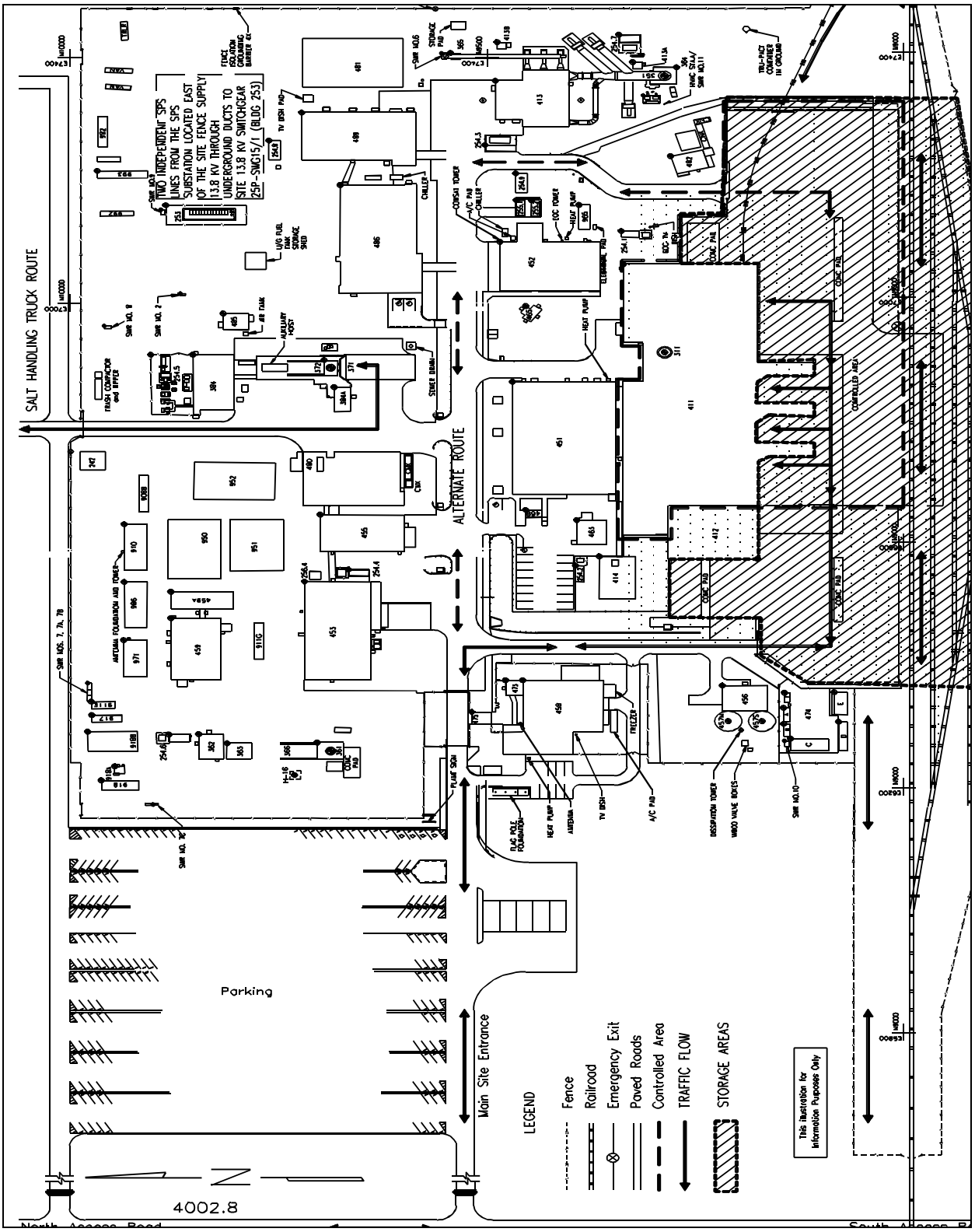

Figure 4.1-2a, WIPP Surface Structures

BLDG./ FAC. #	DESCRIPTION
242	NORTH GATEHOUSE
253	13.8 KV SWITCHGEAR 25P-SWG15/1
254.1	AREA SUBSTATION NO.1 25P-SW15.1
254.2	AREA SUBSTATION NO.2 25P-SW15.2
254.3	AREA SUBSTATION NO.3 25P-SW15.3
254.4	AREA SUBSTATION NO.4 25P-SW15.4
254.5	AREA SUBSTATION NO.5 25P-SW15.5
254.6	AREA SUBSTATION NO.6 25P-SW15.6
254.7	AREA SUBSTATION NO.7 25P-SW15.7
254.8	AREA SUBSTATION NO.8 25P-SW15.8
254.9	AREA SUBSTATION NO.9 25P-SW15.9
255.1	BACKUP GENERATOR #1 25-PE 503
255.2	BACKUP GENERATOR #2 25-PE 504
311	WASTE SHAFT
351	EXHAUST SHAFT
361	AIR INTAKE SHAFT
362	AIR INTAKE SHAFT/HOIST HOUSE
363	AIR INTAKE SHAFT/WINCH HOUSE
364	EFFLUENT MONITORING INSTRUMENT SHED A
365	EFFLUENT MONITORING INSTRUMENT SHED B
366	AIR INTAKE SHAFT HEADFRAME
371	SALT HANDLING SHAFT
372	SALT HANDLING SHAFT HEADFRAME
384	SALT HANDLING SHAFT HOISTHOUSE
384A	SALT HOIST OPERATIONS
411	WASTE HANDLING BUILDING
412	TRUPACT MAINTENANCE FACILITY
413	EXHAUST FILTER BUILDING
413A	EFFLUENT MONITORING ROOM A
413B	EFFLUENT MONITORING ROOM B
414	WATER CHILLER FACILITY & BLDG
451	SUPPORT BUILDING
452	SAFETY & EMERGENCY SERVICES FACILITY
453	WAREHOUSE/SHOPS BUILDING
455	AUXILLIARY WAREHOUSE BUILDING
456	WATER PUMPHOUSE

BLDG./ FAC. #	DESCRIPTION
457N	WATER TANK 25-D-001A
457S	WATER TANK 25-D-001B
458	GUARD AND SECURITY BUILDING
459	CORE STORAGE BUILDING
459A	SANDIA ANNEX
463	COMPRESSOR BUILDING
465	AUXILIARY AIR INTAKE
468	TELEPHONE HUT
473	ARMORY BUILDING
474	HAZARDOUS WASTE STORAGE FACILITY
474A	HAZARDOUS WASTE STORAGE BUILDING
474B	HAZARDOUS WASTE STORAGE BUILDING
474C	OIL & GREASE STORAGE BUILDING
474D	GAS BOTTLE STORAGE BUILDING
474E	HAZARD MATERIAL STORAGE BUILDING
474F	WASTE OIL RETAINER
475	GATEHOUSE
480	VEHICLE FUEL STATION
481	AUXILIARY WAREHOUSE
482	EXHAUST SHAFT HOIST EQUIP. WAREHOUSE
485	COMPRESSOR BUILDING
486	ENGINEERING BUILDING
489	TRAINING BUILDING
H-16	SANDIA TEST WELL (NOT IDENTIFIED)
908B	HBS TRAILER
910	ENVIRONMENTAL MONITORING TRAILER
911G	SANDIA OFFICES TRAILER

BLDG./ FAC. #	DESCRIPTION
917	AIS MONITORING
918	VOC TRAILER
918A	VOC AIR MONITORING STATION
918B	VOC LAB TRAILER
950	WORK CONTROL TRAILER
951	PROCUREMENT / PURCHASING
952	TRAILER (7-PLEX)
965	SAMPLE PREPARATION LAB
971	HUMAN RESOURCES TRAILER
982	TRAILER
986	PUBLICATIONS & PROCEDURES TRAILER
992	SANDIA CALIBRATION LAB TRAILER
993	SANDIA OFFICES TRAILER
SWR NO.1	SWITCHRACK NO. 1
SWR NO.2	SWITCHRACK NO. 2
SWR NO.3	SWITCHRACK NO. 3
SWR NO.6	SWITCHRACK NO. 6
SWR NO.7,7A,7B	SWITCHRACK NO. 7, 7A, 7B
SWR NO.7C	SWITCHRACK NO. 7C
SWR NO.8	SWITCHRACK NO. 8
SWR NO.9	SWITCHRACK NO. 9
SWR NO.10	SWITCHRACK NO. 10
SWR NO.11	SWITCHRACK NO. 11

4003.8

This Illustration for Information Purposes Only

Figure 4.1-2b, Legend for Figure 4.1-2a

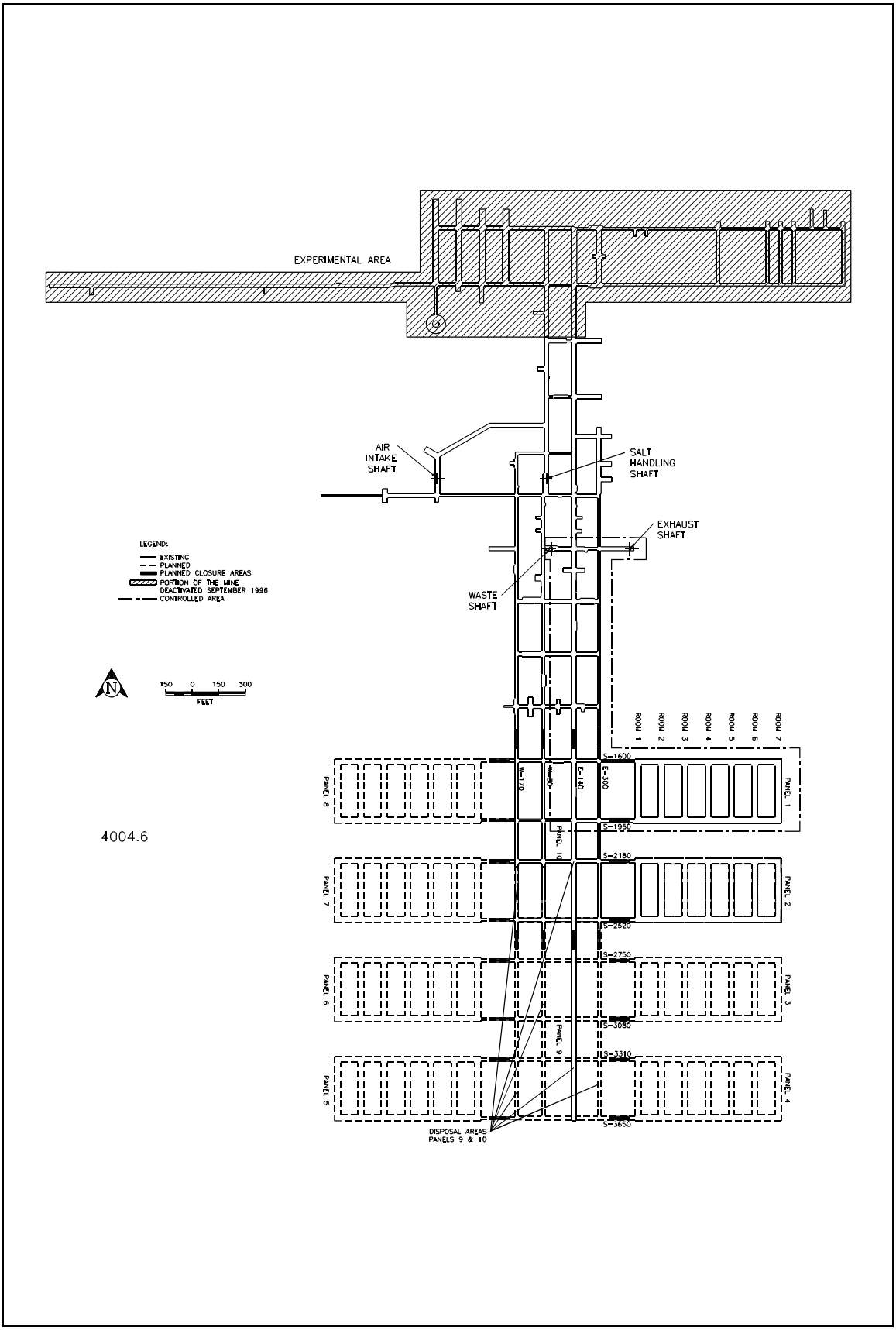

Figure 4.1-3, Planned Disposal Horizon

Table 4.1-1 Design Classes of Structures, Systems, and Components at the WIPP Facility **Page 1 of 5**

System/Component	Design Class (Note 1)	Seismic/Tornado Design Requirements	Design Class Function
PLANT BUILDINGS, FACILITIES, AND MISCELLANEOUS EQUIPMENT (SDD-CFOO)			
Waste Handling Building structure and structural components including tornado doors (Bldg. 411)	II	Design Basis Earthquake (DBE), Design Basis Tornado (DBT)	Provide physical confinement
Auxiliary Air Intake Shaft and Tunnel (Bldg 465)	II	DBE, DBT	Failure could create excess negative pressure in the waste hoist tower
Station A Effluent Monitoring Instrument Shed (Bldg 364)	II	DBE, DBT	Design Class Interface. (Houses Station A)
Effluent Monitoring Rooms A and B (Building 413A and 413B)	II	DBE, DBT	Design Class Interface. (Houses Local Processing Units (LPU)s collecting data from Stations A and B)
Station B Effluent Monitoring Instrument Shed (Bldg 365)	IIIA	Uniform Building Code (UBC)	Design Class Interface. (Houses monitoring equipment for Exhaust Filter Building duct)
Support Building (Bldg 451)	IIIA	UBC (Note 2)	Design Class Interface. (Houses Central Monitoring Room (CMR)
Exhaust Filter Building (Bldg 413)	IIIA	UBC	Design Class Interface. (Houses Exhaust Filtration System)
EFB HEPA Filter Units & Isolation Dampers	II		Failure could prevent mitigation
EFB Exhaust System	IIIA		Failure could prevent mitigation
Building 412 (Originally TRUPACT Maintenance Facility)	IIIA	UBC (Note 2)	Design Class Interface. (Structural interface with WHB)

Table 4.1-1 Design Classes of Structures, Systems, and Components at the WIPP Facility **Page 2 of 5**

System/Component	Design Class (Note 1)	Seismic/Tornado Design Requirements	Design Class Function
PLANT MONITORING AND COMMUNICATION SYSTEM (SDD-CMOO)			
Central Monitoring System	IIIA		Monitors important facility parameters
ENVIRONMENTAL MONITORING SYSTEM (SDD-EM00)			
Volatile Organic Compound (VOC) Monitoring Equipment and sub-systems	IIIA		Monitors release of VOCs
HEATING, VENTILATION, AND AIR CONDITIONING (HVAC) SYSTEM (SDD-HV00)			
Exhaust Filtration System	II		Design Class Interface. (Control of radioactive effluent)
HEPA Filters	II		Control of radioactive effluent
Tornado Dampers	II	DBE, DBT	Control of radioactive effluent
Exhaust Systems HV02, (Bldg 411, RH HVAC), and HV04 (Station A and Bldg 413, Exhaust Filter Building HVAC)	IIIA		Design Class Interface. (Provide filtration and maintain differential pressure)
HVAC for the CMR	IIIA		Design Class Interface. (Maintains acceptable CMR environment)
RADIATION MONITORING SYSTEM (SDD-RM00)			
Stations A3, B2, C, and D1 (including the UPSs)	II	DBE, DBT	Monitors radioactive effluents
The remainder of the RMS SSCs are Design Class IIIA (except PV00 equipment which is IIIB)	IIIA		Monitors radioactive effluents
UNDERGROUND HOIST SYSTEM (SDD-UH00)			
Waste Hoist and Equipment	IIIA	(Note 3)	Failure could cause radioactive material release

Table 4.1-1 Design Classes of Structures, Systems, and Components at the WIPP Facility **Page 3 of 5**

System/Component	Design Class (Note 1)	Seismic/Tornado Design Requirements	Design Class Function
UNDERGROUND VENTILATION SYSTEM (SDD-VU00)			
Exhaust duct elbow at the top of the Exhaust Shaft	II	DBE, DBT	Design Class Interface. (Channels exhaust air to the EFB)
HEPA Filters and Isolation Dampers	II		Control of radioactive effluent
Exhaust Fans for the filtration mode	II		Design Class Interface. (Channels exhaust air through the EFB)
Exhaust System Instruments and Hardware	IIIA		Design Class Interface. (Supports Exhaust Filtration System)
(6) High Pressure Fans for Bulkhead 309 (Pressure Chamber)	IIIA		Maintain buffer zone between RMA and non-RMA
WASTE HANDLING EQUIPMENT (SDD-WH00)			
Facility Cask	II	(Note 4)	Provides permanent shielding
25-Ton Crane - Cask Unloading Room	IIIA	(Note 6)	Failure could cause radioactive materials release
Telescoping Port Shield	II	UBC (Note 5)	Provides permanent shielding
Shield Bell	II	(Note 5)	Provides permanent shielding
Cask Unloading Room Floor Shield Valve	II	(Note 5)	Provides permanent shielding
Hot Cell Shield Valve	II	(Note 5)	Provides permanent shielding

Table 4.1-1 Design Classes of Structures, Systems, and Components at the WIPP Facility **Page 4 of 5**

System/Component	Design Class (Note 1)	Seismic/Tornado Design Requirements	Design Class Function
Transfer Cell Ceiling Shield Valve	II	(Note 5)	Provides permanent shielding
Hot Cell Viewing Windows	II	(Note 5)	Provides permanent shielding
Hot Cell Transfer Drawer	II	UBC (Note 5)	Design Class Interface (Provides permanent shielding)
Hot Cell 15-ton Bridge Crane	IIIA	(Note 6)	Failure could cause radioactive materials release
Hot Cell Bridge and Trolley/PAR 6000 Manipulator	IIIA	(Note 6)	Failure could cause radioactive materials release
Hot Cell Master-Slave Manipulators	IIIA	(Note 7)	Programmatic Impact
Hot Cell Grapple Rotating Block	IIIA		Programmatic Impact
Hot Cell Grapples	IIIA		Failure could cause radioactive materials release
Shielded Insert	IIIA		Failure could cause radioactive materials release
140/25 ton crane	IIIA	UBC (Note 6)	Failure could cause radioactive materials release
Cask Lifting Yoke	IIIA		Programmatic Impact
Facility Cask Rotating Device	IIIA		Programmatic Impact
6.25 ton Overhead Fixed Hoist - Facility Cask Loading Room	IIIA		Failure could cause radioactive materials release

Table 4.1-1 Design Classes of Structures, Systems, and Components at the WIPP Facility **Page 5 of 5**

System/Component	Design Class (Note 1)	Seismic/Tornado Design Requirements	Design Class Function
Facility Cask Loading Room Grapples	IIIA		Failure could cause radioactive materials release
The Horizontal Emplacement and Retrieval Equipment (HERE)	IIIA		Programmatic Impact
Transfer Cell Shuttle Car	IIIA	(Note 6)	Failure could cause radioactive materials release
10-160B Drum Carriage Lift Fixture	IIIA		Failure could cause radioactive materials release

Notes

Note 1 See Table 3.1-2 for Basic Design Requirement and Table 3.2-3 for the Design Loads.
Note 2 The main lateral force resisting members of the Support Building and Building 412 are designed for DBE and DBT to protect the Waste Handling Building from their structural failure.
Note 3 Design loads and requirements dictated by Mine Safety and Health Administration (MSHA).
Note 4 Cask certification requirements exceed DBT/DBE.
Note 5 System completely within a Class II confinement - DBE/DBT not required.
Note 6 Designed to hold load in place in the event of a DBE.
Note 7 Supports designed to prevent manipulator from falling during a DBE.

This page intentionally blank

4.2 Facility Design

4.2.1 Surface Structures

WIPP's structures provide for the handling and subsequent underground emplacement of Transuranic (TRU) waste. Surface waste handling operations are conducted within a controlled area (CA). The normal extent of the CA for simultaneous contact handled (CH) and remote handled (RH) waste handling activities is depicted in Figure 4.1-2a. Radiological control personnel will determine specific boundary locations and posting requirements for CAs, as required by scheduled waste handling activities and radiological conditions inside the Waste Handling Building (WHB). The CA external to the WHB provides for the receipt, storage, and dispatch of truck-transported radioactive waste shipping containers. Radiological control personnel will determine specific boundary locations and posting requirements for the external CA consistent with scheduled activities.

The RH TRU waste shipments, including the transporter trailer and shielded road cask, are transferred into the WHB for subsequent operations.

The land areas around the surface buildings are designed to minimize erosion. Runoff water is diverted as necessary from the buildings, tracks, or roads and returned to the natural drainage path and into the storm water retention basins.

The WIPP facility does not lie within a 100-year flood plain. There are no major surface-water bodies within 5 mi (8 km) of the site, and the nearest river, the Pecos River, is approximately 12 mi (19.3 km) away. The general ground elevation in the vicinity of the surface facilities (approximately 3,400 ft [1,036 m] above mean sea level) is about 500 ft (152 m) above the riverbed, and 400 ft (122 m) above the 100-year flood plain. Protection from flooding or ponding caused by probable maximum precipitation (PMP) events is provided by the diversion of water away from the WIPP facility by a system of peripheral interceptor diversions. Additionally, grade elevations of roads and surface facilities are designed so that storm water will not collect on the site under the most severe conditions. Repository shafts are elevated at least 6 in (15.2 cm) to prevent surface water from entering the shafts. The floor levels of all surface facilities are above the levels for local flooding due to PMP events.

Facilities at the WIPP site have been constructed to contain or control storm water discharges; these include retention basins and storm water diversion berms. The two 180,000 gal (681,354 L) site water tanks are located at the southwest corner of the property protection area, the topography of the site includes a sloping terrain to this corner of the site. There is a catch basin to the west of the water tanks, which is designed with adequate capacity to hold the contents resulting from a failure of both water tanks.

4.2.1.1 Waste Handling Building

The WHB and its associated systems provide a facility to unload TRU waste from the incoming shipping containers and to transfer that waste to the underground disposal area via the waste shaft. The WHB is divided into the following functional areas: the CH TRU waste handling area, the RH TRU waste handling area, the WHB support area, Building 412, and the WHB mechanical equipment room. The general layout of the WHB is shown in Figures 4.2-1a and 4.2-1b, with sectional views shown in Figure 4.2-3.

The WHB is a steel frame structure with insulated steel siding, and includes portions of the building, such as the Hot Cell and Transfer Cell, that are constructed of concrete for shielding and structural purposes. The WHB acts as a confinement barrier to control the potential for release of radioactive material and is classified as Design Class II. The WHB is designed for Design Class II loads, including the Design Basis Earthquake (DBE) and Design Basis Tornado (DBT). Waste handling areas subject to potential for contamination are provided with impermeable protective coatings. The WHB Confinement and Ventilation System is discussed in detail in Section 4.4, the Safety Support Systems in Section 4.5, and the Utility/Auxiliary Systems in Section 4.6.

4.2.1.1.1 RH TRU Waste Handling Areas

The RH TRU waste side of the WHB has two major areas for handling RH waste: the RH bay and the transfer complex. The transfer complex is divided into four sub-areas designed for specific functions: the Cask Unloading Room (CUR), the Transfer Cell, the Hot Cell, and the Facility Cask Loading Room. The major areas within the RH waste handling area are shown in Figures 4.2-1a and 4.2-1b, with sectional views shown in Figure 4.2.3. Waste transport routes in the WHB are shown in Figure 4.2-2.

RH Bay

The WHB RH bay is a high-bay area for receiving and initial handling operations of the 72-B and 10-160B shielded road casks. A trailer carrying a shielded road cask enters the RH bay through a set of double doors on the eastern side of the WHB. For contamination control, the WHB ventilation system is designed to maintain airflow direction to the areas where postulated accidents could occur. Ventilation airflow is from the RH bay into the CUR and Hot Cell; from the CUR into the Transfer Cell; from the Facility Cask Loading Room into the Transfer Cell; and from the Transfer Cell into the Hot Cell. The RH bay houses the following equipment:

Overhead 140/25 Ton Bridge Crane

The Design Class IIIA overhead 140-ton bridge crane with a 25-ton auxiliary hoist is used for road cask handling and maintenance operations. The bridge crane is designed to stay on its rails retaining control of the load during a DBE. The crane is controlled from a control box operated from the floor of the RH Bay. The 140-ton main hoist has a lifting height of 41 ft (12.5 m), while the 25-ton auxiliary hoist has a lifting height of 42 ft (12.8 m).

Motorized Man Lifts

Two motorized man lifts are used to provide waste operations personnel elevated work platforms for access to the 72B and 10-160B casks while the casks are on their transport trailers. Waste operations personnel use the platforms to perform the initial waste handling activities of removing the impact limiters from the road casks and performing any work required for readying the casks for lifting from their trailers. After the 10-160B road cask has been off-loaded, waste operations personnel, working off the lift, remove the lid bolts.

RH TRU 72-B Road Cask

The RH TRU 72-B road cask is a stainless steel, lead-shielded cask designed to provide double containment for shipment of transuranic waste materials. The packaging consists of a cylindrical stainless steel and lead cask body, a separate inner stainless steel vessel, and foam-filled impact limiters at each end of the cask body.

The cask body (OC) consists of a 1.5 in (3.8 cm) thick, 41.1 in (104.5 cm) outer diameter stainless steel outer shell, and a 1 in (2.54 cm) thick, 32.4 in (82.2 cm) inside diameter stainless steel inner shell, with 1.9 in (4.76 cm) of lead shielding between the two shells. A 5 in (12.7 cm) thick bottom forging is welded to the OC. The OC is closed by a 6 in (15.2 cm) thick stainless steel lid and 18, 1.25 inch diameter bolts. The main closure lid has a double bore-type O-ring seal. The containment seal is the inner butyl O-ring seal, which is leak testable. The OC lid has a single vent/sampling port that is sealed with butyl O-rings. The nominal 27,900 lb (12,648 kg) OC provides a containment boundary for the payload and also acts as an environmental barrier. The OC lead shielding assures the surface radiation levels are below DOT limits.

The separate inner vessel (IV) is constructed of a 1.5 in (3.8 cm) thick bottom forging welded to a 0.4 in (0.95 cm) thick, 32 in (81.2 cm) outside diameter shell. The 6.5 in (16.5 cm) IV lid is secured by eight, 7/8-inch bolts and has a single vent/sampling port The IV cavity has a minimum diameter of 26.5 in (67.3 cm), and is 121.5 in (308.6 cm) long. The nominal 4,000 lbs (1824.8 kg) IV provides a containment boundary for the RH waste canister

The RH TRU 72-B road cask is certified by the NRC per 10 CFR 71.63(b). The general road cask arrangement, shown in Figure 4.2-4, includes impact limiters, weighing nominal 2500 lbs (1155 kg) each, at each end of the road cask which function to provide protection of the seal areas during the hypothetical transport accident events. Each impact limiter is constructed of polyurethane foam-filled stainless steel attached to the OC with six, 1.25-inch diameter bolts. The approximate total weight of a 72 B road cask with impact limiters and a fully loaded RH canister is 45,000 lbs (20,412 kg).

The impact limiters are provided with lifting lugs, allowing the use of rigging for handling. Both of the road cask lids have "bayonet" openings in the outside center for insertion of lifting fixtures. Both lids are also provided with threaded holes for insertion of lifting bolts or eyes. The shielded road cask has two transport trunnions, used for support during transport and as a mounting point for the road cask transfer car. It also has four handling trunnions, located 90° apart at the lid end, used for lifting in the RH bay and CUR, and two trunnions located at the opposite end used for rotating the cask from the horizontal to the vertical position.

RH TRU 10-160B Road Cask

The 10-160B road cask is a steel, lead-shielded cask designed to provide single containment for shipment of transuranic waste. The packaging consists of a cylindrical carbon steel and lead cask body with impact limiters at each end. The cask is designed to safely transport ten 55-gal drums of RH TRU waste in two stacked drum pallet/carriage units holding 5 drums each. The maximum transport weight of the contents is 14,500 lb (6577.1 kg)

The cask body consists of a 2.0 in (5.08 cm) thick, 78.5 in. (199.4 cm) outer diameter carbon steel outer shell, and a 1.1 in (2.86 cm) thick, 68 in (172.7 cm) inside diameter carbon steel inner shell, with 1.9 in (4.76 cm) of lead shielding between the two shells. A 5.5 in (13.97 cm) thick flat circular steel bottom plate is welded to the inner and outer shells. The lead shielding assures the surface radiation levels are below DOT limits. The internal cavity dimensions are 68 in (167.6 cm) in diameter and 77 in (195.5 cm) high. The overall length of the cask without impact limiters is 88 in (223.5 cm). An 11 gage stainless steel thermal shield surrounds the cask outer shell in the region between the impact limiters. The cask is closed by a 5.5 in (13.97 cm) thick steel primary lid, weighing 5300 lbs (2404 kg), that is attached to the cask with 24 evenly spaced 1.75 in (4.45 cm) diameter bolts. The lid closure is made in a stepped configuration to eliminate radiation streaming at the lid/cask body interface. A double silicone O-ring provides the lid to cask seal.

The primary lid has a 31 in (78.7 cm) diameter opening that is equipped with a secondary lid. The 5.5 in (14 cm) thick 46 in (116.8 cm) diameter steel secondary lid, weighing 2150 lbs (975.2 kg), is attached to the center of the primary lid with 12 evenly spaced 1.75 in (4.45 cm) diameter bolts. The secondary lid has multiple steps machined in its periphery which match those in the primary lid, eliminating radiation streaming pathways, and is sealed to the primary lid by a double silicone O-ring.

The RH TRU 10-160B road cask is certified by the NRC per 10 CFR 71.63(b). The 10-160B road cask arrangement, shown in Figure 4.2-5, includes impact limiters at each end of the road cask. The upper (lid end) impact limiter weighs 5,300 lbs (2404 kg) while the lower weighs 5,200 lbs (2358 kg). Both impact limiters extend about 12 in (30.5 cm) beyond the outside wall of the cask and are installed prior to transport so that the cask can meet all transport environment and accident conditions. Each 102 in (259 cm) outside diameter impact limiter is constructed of polyurethane foam-filled stainless steel. The impact limiters are secured to each other around the cask by eight ratchet binders. The approximate total weight of a fully loaded 10-160B road cask with impact limiters is 72,000 lbs (32658.65 kg) and has an overall length of 130 in (3.3 m). The impact limiters are provided with lifting lugs, allowing the use of rigging for handling. The 10-160B cask is equipped with four tie-down lugs welded to the outer shell. The cask also has two lifting lugs and two redundant lifting lugs which are removed during transport and reinstalled for waste handling operations. The secondary lid is equipped with three lifting lugs used to lift both lids. Both lids are covered by the top impact limiter and rain cover during transport.

Cask Lifting Yoke

The Design Class IIIA lifting yoke is a lifting fixture that attaches to either hook of the 140/25-ton crane and is designed to lift and rotate the 72B road cask by engaging its handling trunnions. Figure 4.2-6 shows the 140/25-ton overhead crane with the cask lifting yoke lowering a 72B road cask onto the 72B cask transfer car.

72B Road Cask Transfer Car

The 72B road cask transfer car is a self-propelled, rail guided structural steel car with two A-frame supports and a bottom positioning fixture designed to hold the 72B road cask in the vertical position. The point of the A-frame is designed to cradle the transport trunnions of the road cask (Figure 4.2-7), while the positioning fixture prevents the cask from moving.

The four wheeled car, weighing 3950 lbs (1792 kg) , is designed to transport the loaded 72B road cask from the transport trailer to the cask preparation station, then to the CUR. It also repeats the route in reverse for empty road casks. Each of the two front wheels is powered by an electric motor which moves the car at one of two speeds, 16.5 or 66 ft. (5.0 or 20.1 m) per minute.

10-160B Road Cask Transfer Car

The 10-160B road cask transfer car (Figure 4.2-8) is a four wheeled, self-propelled, rail guided structural steel car constructed similar to the 72B cask transfer car without the A-frame structure. The 10-160B road cask transfer car weighs 2930 lbs (1329 kg) and is designed to transport the 10-160B road cask, in the vertical position, from the transport trailer to the CUR. It also repeats the route in reverse for an empty 10-160B cask. Each of the two front wheels is powered by an electric motor which moves the car at one of two speeds, 16.5 or 66 ft. (5.0 or 20.1 m) per minute. The 10-160B road cask transfer car can be configured with an A-frame structure to support the 72-B road cask.

Cask Preparation Station

The cask preparation station is a elevated work platform designed to provide accessability to the road cask lid area to allow workers to perform unloading and shipment activities such as; radiological surveys, inspections, and minor maintenance. The cask preparation station work deck is 9 ft 6 in (2.89 m) above the RH bay floor and straddles the road cask transfer car rails.

The removal/installation of the 72B cask outer lid and installation of the inner lid lift fixture (pintle) is performed at this location.

10-160B Cask Lid Lift Fixture

The 10-160B lid lift fixture has a pintle and three one inch ball lock pins (Figure 4.2-9). A ball lock pin is inserted into each of the lid lifting lugs to attach the lift fixture to the 10-160B lid. When the 10-160B is in the CUR, the lid lifting fixture pintle is engaged by a facility grapple connected to the Hot Cell crane, then the lid is lifted into the Hot Cell. The 10-160B lid lift fixture is attached to the cask lid by using either the 140/25 ton crane or the cask preparation station jib crane.

72B Cask Outer Lid Lift Fixture

The outer lid lift fixture is used with the cask preparation station jib crane to remove the outer lid from the 72B road cask while the road cask is in the vertical position on the 72B road cask transfer car. The lift fixture is lowered by the jib crane onto the road cask and is attached to the lid.

72B Waste Canisters

The 72B cask waste (payload) canister (Figure 4.2-10) is a DOT Type A (or equivalent) container. It is a carbon or stainless steel single-shell container with an outside diameter of 26 in (66 cm), a wall thickness of 0.25 in (0.64 cm), and an overall length of 121 in (3.1 m). It has an inside diameter of 25.5 in (64.77 cm) with an inside length of 108 in (2.74 m). The 0.375 in (0.95 cm) dished head with integral WIPP standard lift pintle is attached to the shell after the container is filled with waste. The canister is vented using a suitable filter and can be direct loaded or loaded with three 55-gal (208 L) drums of radioactive waste, each with a vent filter. It has a maximum weight, including the canister and its waste content, of 8,000 lbs (3628.7 kg).

Facility Canisters

The facility canister is a carbon steel single-shell container weighing approximately 1200 to 1800 lbs (544.3 to 816.5 kg), it has an outside diameter of 28.5 in (72.4 cm), a wall thickness of 0.25 in (0.64 cm), and an overall length of 117.5 in (3.0 m). It has an inside diameter of 28 in (71 cm) with an inside length of 110.5 in (2.8 m). The dished head with integral WIPP standard lift pintle is attached to the shell after the container is filled with waste drums from a 10-160B cask. The canister can hold three 55-gal (208 L) drums of radioactive waste. Each drum is vented with a filter and can have a maximum weight of 1000 lb (453.6 kg).

10-160B 55-Gallon Drum Lift Device

A drum lift device (Figure 4.2-11) is installed on each 55-gallon drum of radioactive waste prior to the drum being placed on the drum pallet/carriage and loaded into a 10-160-B road cask. The drum lift device is similar in construction to the drum lid bolt ring and is installed on the drum just below the first chine below the lid. The lift device has two diametrically opposed wire cable loops that are used to lift the drum from the carriage. When the wire cable loops are engaged by a lifting fixture, the symmetrical construction and placement of the drum lift device allows the drum to be suspended, moved, and inserted into the facility canister.

Transfer Complex Description

The transfer complex consists of a series of rooms with concrete walls up to 54 inches (137 cm) thick, that provides shielding for the RH TRU waste canisters and drums when they are not in a road cask, shielded insert, or the facility cask. The complex is located in the north side of the RH bay of the WHB (Figure 4.2-12), and consists of the CUR, the Hot Cell, the Transfer Cell, and the Facility Cask Loading Room.

The CUR floor is at reference elevation 100’-0" and at the east end of the complex. The Hot Cell floor is 31 ft (9.4 m) wide, 57 ft (17.3 m) long, and located at elevation 123’-6". The ceiling of the Hot Cell is at elevation 156’-10". To the west of the Hot Cell between elevations 100’-0" and 124’-6" is the Facility Cask Loading Room. Above this room is the manipulator repair room and above it is the crane maintenance room. The Transfer Cell which is 10 ft (3 m) wide and 79 ft 5 in (24.2 m) long has a floor elevation of 76’-0".

Cask Unloading Room

The CUR has 54 in (137 cm) thick concrete walls to provide a shielded area for lowering loaded 72B casks into the Transfer Cell and unloading of RH waste drums from the 10-160B cask into the Hot Cell. A 140-ton concrete-filled steel shield door at the entrance to the CUR provides radiation protection for personnel outside the room during 10-160B cask unloading operations. A free-standing control panel for the CUR 25-ton crane is located in the southwest corner of the room. The CUR shield door is interlocked so that it must be closed before the Hot Cell shield plugs can be removed, conversely the Hot Cell shield plugs are interlocked so that they cannot be removed when the CUR shield door is open.

The CUR shield door is 18.2 ft (5.7 m) long by 22.0 ft (6.7 m) high by 4.0 ft (1.2 m) thick. The shield door is opened and closed, at a rate of approximately 15 ft (4.67 m) per minute, by a pneumatic cylinder/piston and when moving is supported by a cushion of air exhausting from the door bottom, the air cushion is referred to as an "air bearing". When closed, an inflatable seal is pressurized forming a partial seal between the inside of the door and the surface around the CUR door opening. When the door is closed, the exhaust air supply is removed, the loss of the air cushion causes the door to settle to the floor.

The CUR contains the following equipment.

25-Ton Crane/Cask Lifting Yoke

The CUR 25-ton crane is fitted with a dedicated lifting yoke used to lift the 72B cask from the 72B road cask transfer car, lower it through the CUR floor shield valve, and set it in the shuttle car inside the Transfer Cell. The bridge rails of the Design Class IIIA overhead 25-ton bridge crane are attached to the walls of the CUR. The crane is designed to stay on its rails retaining control of its load during a DBE. The lifting yoke lifts the road cask by engaging the road cask handling trunnions. The 25-ton crane has a lifting height of 28 ft (8.5 m).

Load cells are provided on each hoist cable to provide indication of cable overload and/or load imbalance. In addition to protecting the crane and cask lifting yoke from damage, the load cells are used to prevent inadvertent decoupling of the lifting yoke from the cask lifting trunnions.

Floor Mounted Shield Valve

The floor mounted shield valve has a valve body that is a carbon steel plate 6.5 in (16.5 cm) thick, 68 in (172.7 cm) wide and 67.5 in (171.5 cm) long (Figure 4.2-13). It is supported on four rollers which ride on two floor-mounted flat tracks. Four guide rollers mounted in the bottom of the shield keep the shield in line. The shield is positioned by a Design Class II motor-driven ball screw actuator mounted such that the shield valve body rolls under the actuator as it moves from the closed to open position (normally maintained in closed position). The motor actuator includes a brake and limit switch for valve position indication and control interlocks. The shield valve body weighs approximately 8,500 lb (3855.5 kg). The floor valve provides permanent shielding and separates the CUR and the Transfer Cell for differential pressure control. When lowering a 72B cask into the Transfer Cell, air pressure in the CUR is maintained higher than in the Transfer Cell. The floor shield valve is interlocked to other RH waste handling system components as follows:

- The floor shield valve can not be closed unless the CUR 25-ton crane hook is in the high limit position
- The floor shield valve cannot be opened when the Hot Cell shield plugs have been removed, nor can the Hot Cell shield plugs be removed while the floor valve is open.
- The floor shield valve can not be opened unless the Hot Cell shield valve and the Transfer Cell ceiling shield valve are closed.

<u>Hot Cell Complex</u>

The Hot Cell is a 54 in (137 cm) thick concrete walled room that provides a shielded location for the facilities and equipment necessary to unload the RH waste drums from their 10-160B drum carriage units; provides temporary storage for unloaded drums, provides for inspections of the physical integrity of the drums, provides for the performance of a radiological contamination survey and identification verification of each drum, provides for loading drums into facility canisters, and provides overpack facilities for 72B waste canisters. Details of the Hot Cell area are shown in Figures 4.2-14a, 4.2-14b, and 4.2-14c. A Design Class IIIA bridge mounted power manipulator operates in the Hot Cell with rails at elevation 141’-0". The Hot Cell Design Class IIIA 15-ton bridge crane operates above the power manipulator, with its rails at elevation 148’-0". The operating gallery (elevation 122’ 1") provides space for operating personnel to monitor and control all operations in the Hot Cell. Six Design Class II

shielded viewing windows between the operating gallery and the Hot Cell allow nearly 100% visual observations of all operations within the Hot Cell. A Design Class II transfer drawer is provided at the radiological inspection station for collecting surface contamination assessment swipes and the transfer of the swipes from the Hot Cell to the glove box in the operating gallery.

Access to the Hot Cell from the CUR is through two shield plugs in the Hot Cell floor. The large plug is 8 ft 8 in (2.64 m) in diameter and contains a smaller concentric 2 ft 8.25 in (0.82 m) diameter plug. Both plugs must be in place before a road cask can enter or exit from the CUR. When installed, the plugs provide shielding corresponding to the level of radiation protection required by the CUR. An interlock is provided between the CUR shield door and the Hot Cell crane, and requires that the shield door be closed in order to remove the shield plugs and lower the crane into the CUR. When the shield door is closed, the CUR functions as an air lock between the Hot Cell and the RH Bay. The Hot Cell is maintained at the lowest negative pressure and air leakage is from the RH bay through the CUR into the Hot Cell. The Hot Cell has provisions for maintenance of installed equipment. Access to the Hot Cell is permitted only when RH waste containers are not present. The following equipment is installed or used in the Hot Cell:

Hot Cell 15-Ton Crane

The remotely operated Design Class IIIA overhead 15-ton bridge crane has a 32 ft (9.75 m) span and can travel about 96 ft (29.2 m) in an east-west direction. It carries a trolley which can move approximately 23 ft 10 in (7.26 m) in the north-south direction. The trolley carries a hoist which supports a Design Class IIIA grapple rotating block and facility grapple. A hook can be attached to the grapple to handle loads including loaded or empty 10-160B drum pallet/carriage units, and 55-gal drums of RH waste. The hoist has a lifting height of 64 ft (19.5 m). This crane is designed to stay on its tracks, and to maintain control of its load in the event of a DBE or electrical failure.

The Design Class IIIA grapple rotating block is an assembly in a fabricated steel housing consisting of four sheaves at the top and a gear drive connected to clevis at the bottom. The grapple rotating block is suspended from the Hot Cell 15-ton bridge crane by cables passing through the sheaves. The gear drive has a motor driven pinion that rotates the clevis yoke which normally supports a facility grapple.

The Design Class IIIA facility grapple (Figure 4.2-22) is a special lift fixture that is designed to engage a standard WIPP pintle. The facility grapple has an axially mounted electrically operated actuator that rotates a drive gear that drives three lifting lugs into or out of engagement under the WIPP pintle. In the event of a power failure when the facility grapple was engaged on a lifting pintle, the lifting lugs would automatically lock in place. The Hot Cell facility grapple is identical to the facility grapple described in the Facility Cask Loading Room equipment.

A crane hook, rated at 15-tons, is available for use with the facility grapple. The hook is attached to a handling pintle with a flange.

The mobile bridge crane operator control console is located in operating gallery. Its mobility allows the operator to select the optimum Hot Cell viewing window location to visually observe the crane operation, or the operator may elect to view a CCTV monitor while operating the crane. The bridge crane can be remotely positioned or manually winched into the Crane Maintenance Room for any necessary repairs.

Shield Plug Lift Fixtures

There are two shield plug lift fixtures, one for each size of shield plug. Both fixtures can be used with the 15-ton bridge crane to remove their respective Hot Cell shield plug, or both shield plugs can be removed at the same time using only the large shield plug lift fixture. The small shield plug lift fixture, shown in Figure 4.2-14c, resembles a tripod. It is 9 ft (2.7 m) tall with a handling pintle at the top which is engaged by a facility grapple. The legs are fabricated from 3 in schedule 40 pipe. Each leg has an engagement pin which can engage lifting lugs, on a 13 in (33 cm) radius, on the small shield plug removal adapter. A centering pin is provided near the bottom of the shield plug lift fixture to engage the shield plug removal adapter and align the fixture with the removal adapter. The fixture is lifted by the 15-ton bridge crane with the facility grapple installed. The fixture is rotated by the rotating block to allow it to engage the shield plug removal adaptor lifting lugs. The small shield plug lift fixture weighs approximately 400 lbs (181.4 kg) and has the capacity to lift approximately 10,000 lbs (4535.9 kg).

The shield plug removal adapter is a fabricated steel fixture that is attached to the small shield plug with three bolts through holes in its base plate. It has three arms, each with a lifting lug that can be engaged by the small shield plug lift fixture. The center line of the lifting lugs are each on a 13 in (33 cm) radius. The adapter has a height of 12 3/8 in (31.4 cm) and weighs approximately 160 lbs (72.5 kg).

The large shield plug lift fixture, similar in design to the small shield plug lift fixture, is 11 ft (3.4 m) tall and its engagement pins have a 39 in (99 cm) radius. It is fabricated from 3 inch schedule 80 pipe to accommodate a greater lift weight. Its three engagement pins are designed to engage the three lifting lugs of the large shield plug removal adaptor. The large shield plug lift fixture weighs approximately 800 lbs (362.8 kg) and has a lift capacity of 20,000 lbs (9071.8 kg).

10-160B Drum Carriage Lift Fixture

The drum carriage lift fixture is a pentapod with five legs and a centering guide post with a guide pin. Each leg has an engagement pin which engages a lift lug, mounted on a lifting post, on the drum carriage. The guide pin slides into the center of the drum carriage center stanchion. Figure 4.2-15a shows the drum carriage lift fixture and a fully loaded (five 55-gallon drums) drum carriage. A bottom view of the lift fixture is also shown in Figure 4.2-15a. Figure 4.2-15b shows the lift fixture engaging the upper drum carriage and the lower drum carriage. A view of a loaded drum carriage is provided in Figure 4.2-15b. The drum carriage lift fixture has a lift capacity of approximately 6500 lbs (2948.4 kg).

Viewing Windows

Six Design Class II viewing windows are provided between the operating gallery and Hot Cell. Four viewing windows are located in the north wall and two in the west wall. The window frames are cast in the concrete wall separating the Hot Cell from the operating gallery. The frames are designed so that any radiation streaming paths parallel to the optical axis are prevented. The oil shielding windows are comprised of the frame, shielding glass, cover glasses and trim frames. The cover glasses and gaskets retain the oil within the window housing. The cold side (operating gallery) is tempered glass while the hot side (Hot Cell) is non-browning glass. The oil fill provides radiation shielding and acts as a heat transfer medium. An oil expansion tank is provided as a means of keeping the window full of oil despite the temperature excursions caused primarily by exposure to radiation and the high intensity lighting within the Hot Cell.

Master/Slave Manipulators

There are four Design Class IIIA master-slave heavy duty manipulators in the Hot Cell that allow operators in the operating gallery to reproduce the natural movements and forces of the human hand. The operator must exert the same force on the master arm that he wishes to exert with the slave arm; however, the tong squeeze motion does have a mechanical force multiplication. The manipulators are mounted in the wall of the Hot Cell using a "thru tube".

PAR 6000 Bridge Mounted Power Manipulator

The Design Class IIIA PAR 6000 power manipulator is a crane mounted remote controlled arm with shoulder, elbow, and wrist pivots which can be independently driven (Figure 4.2-14c). The wrist can support various adaptor tools including a hook hand and parallel jaw hand. The manipulator is suspended from a rotation drive assembly which permits full rotation of the manipulator about its vertical axis. The manipulator is attached to the rotation drive by two locking pins which allow for remote removal of the manipulator from the rotation drive assembly.

The rotation drive is attached to the bottom of a telescoping tube which provides manipulator vertical motion. There are five square nested telescoping sections connected in such a way that movement of any one tube causes all tubes to move. The telescoping tubes have an up-down travel of approximately 15 ft (4.6 m) at a speed of 15 ft (4.6 m) per minute and have a lifting capacity of 5000 lbs (2668 kg). The telescoping tube assembly is supported by the trolley carriage which travels on a bridge assembly. The bridge can travel east-west for approximately 50 ft (15.2 m) at a speed of up to 22 ft (6.7 m) per minute, while the trolley can travel north-south for approximately 25 ft (7.6 m) at a speed of up to 15 ft (4.6 m) per minute.

The control panels for the PAR 6000 power manipulator includes the controls for bridge, trolley, hoisting, and manipulator operation. The control equipment is located in panels along the north wall of the operating gallery. The operator controls and indicators are mounted on the PAR 6000 manipulator console. The console is mounted on wheels and can be moved near the viewing window that provides the best viewing of the operation to be performed. The console includes cables that can be plugged into any one of three connection boxes mounted in the operating gallery.

Closed-Circuit Television System

There are several closed-circuit television (CCTV) high resolution cameras in the Hot Cell which can be monitored in the operating gallery. CCTV cameras are used to provide direct viewing of specific operations. Each camera system includes a camera head which is mounted inside the Hot Cell, a control unit which is located in the operating gallery, and connecting cable. The video output is directed to monitors which are located for operator convenience. Each camera is fitted with a zoom lens and has its own control unit, which is rack mounted in the operating gallery. The cameras are supported on a pan/tilt unit to provide full motion.

Shielded Transfer Drawer

A Design Class II shielded transfer drawer is used to transfer materials (radiological smear samples and small tools) from the hot cell to a glove box in the operating gallery (Figure 4.2-16). A motor driven shield plug blocks the 20 in (50.8 cm) opening in the shield wall of the hot cell. The shield plug travels 46 in (1.2 m) perpendicular to the opening.

The glove box in the operating gallery side of the shield wall has a viewing window, two glove ports, and a transfer port. A motor driven shield plug in the floor of the glove box blocks off the hot cell transfer port in the same manner as is done inside the hot cell. The glove box shield plug has a travel of 38 in (96.5 cm). The transfer drawer shield plugs are interlocked so that only one can be in the open position at any time. The transfer drawer and glove box are vented into the RH exhaust air duct.

The transfer drawer is a flat tray, roller-mounted on the drawer carriage that rolls on rails on the bottom of the opening of the hot cell shield wall. When the hot cell shield plug is closed and the glove box shield plug is retracted, the operator can pull the sample tray into the glove box.

Hot Cell Shield Valve

The Hot Cell shield valve with its Design Class II actuator is identical to the CUR floor mounted shield valve (Figure 4.2.13). This shield valve provides permanent shielding and separates the Hot Cell and the Transfer Cell. When moving waste canisters between the Hot Cell and the Transfer Cell, ventilation air flow is from the Transfer Cell into the Hot Cell. The Hot Cell shield valve is interlocked to other RH waste handling system components as follows:

- Hot Cell shield valve can not be opened unless the CUR floor shield valve and the Transfer Cell ceiling shield valve are closed.
- Hot Cell shield valve cannot be closed unless the Hot Cell crane grapple is in the high limit position
- Hot Cell shield valve and the CUR floor shield valve must be closed before the Transfer Cell ceiling shield valve can be opened.
- Hot Cell shield valve and the Transfer Cell ceiling shield valve must be closed before the CUR floor shield valve can be opened.
- Hot Cell shield valve can not be opened unless the Transfer Cell shuttle car is positioned below the Hot Cell shield valve port.

Transfer Cell

The Transfer Cell, located beneath the CUR and the Facility Cask Loading Room, contains the Design Class IIIA shuttle car used to move either the 72B cask or the shielded insert(used with the facility canister). The Transfer Cell also contains the 72B inner lid bolts detensioning robot, a radiological contamination swipe robot, CCTV cameras, the ceiling mounted shield valve with a Design Class II actuator, and transport system for radiological survey samples (swipes).

Transfer Cell Shuttle Car

The Design Class IIIA rail-mounted, chain-driven shuttle car (Figure 4.2-17) is designed to transfer either one 72B cask from below the CUR floor shield valve to below the Transfer Cell ceiling shield valve or one facility canister in a shielded insert from below the Hot Cell shield valve to below the Transfer Cell ceiling shield valve. The shuttle car is a steel frame structure about 20 ft (6 m) long. 6 ft (1.8 m) wide, with a 10 ft (3 m) deep pocket for holding either the 72B cask or the shielded insert.

The transfer cell shuttle car chain drive system, located at the west end of the Transfer Cell, moves the shuttle car at a speed of 10 to 31 ft (3 to 9.4 m) per minute. The chain drive system, with redundant steel roller chains (1 in wide links with a 3 in pitch), one steel roller chain can move the car, has double-chain sprockets driven by a solid shaft which penetrates the Transfer Cell wall so that the gear reducer and electric motor are located outside the Transfer Cell. The gear reducer and drive motor are connected by a triple V-belt.

Shielded Insert

The Design Class IIIA shielded insert is specifically designed to be used in the Transfer Cell to transport one loaded facility canister from below the Hot Cell shield valve to below the Transfer Cell ceiling shield valve. The shielded insert is designed similar to the 72-B road cask but has a larger inner diameter to accommodate the wider facility canister. The shielded insert will be installed on the shuttle car when loaded facility canisters, in the Hot Cell, are ready for underground implacement.

Transfer Cell Ceiling Shield Valve

The ceiling mounted shield valve is located under the port connecting the Transfer Cell to the Facility Cask Loading Room. The shield valve is a 12 in (30.5 cm) deep steel frame which supports a 42 in (106.7 cm) square shield plate that is 11 in (27.9 cm) thick. The 8 ft (2.4 m) long frame is bolted to the Transfer Cell ceiling (Figure 4.2-13). The Design Class II electric motor-driven-screw actuator is attached to the shield plate with a clevis pin. Valve travel from full-closed to full-open position is 42 in (106.7 cm) at a speed of 3 in (7.6 cm) per second. The shield valve is normally maintained in the closed position, except during facility cask loading activities. The valve motor is equipped with torque switches that will automatically shut off power if the valve tried to close against a hanging waste canister. The shield valve provides permanent shielding and separates the Transfer Cell and Facility Cask Loading Room for differential air pressure control. Air pressure in the Facility Cask Loading Room is maintained higher than that in the Transfer Cell. The Transfer Cell shield valve is interlocked to other RH waste handling system components as follows:

- Transfer Cell shield valve cannot be opened unless the CUR floor and Hot Cell shield valves are closed. This minimizes the potential for ventilation air imbalance that could occur if the three shield valves were open at the same time.
- Transfer Cell ceiling and Hot Cell shield valves are interlocked with the shuttle car drive so that the shuttle car cannot be moved if both shield valves are not closed. This interlock prevents damage to the canister from shuttle car movement during canister transfer.

Facility Cask Loading Room

The Facility Cask Loading Room has 54 in (137 cm) thick concrete shield walls and contains the equipment needed to load RH waste canisters into the facility cask and for the subsequent transfer of the loaded facility cask to the waste hoist conveyance. An operating console located behind a shadow shield in the north portion of the room is used to control the Facility Cask Loading Room operational activities. The Facility Cask Loading Room functions as an air lock between the waste shaft and the Transfer Cell and RH bay.

Facility Cask

The Design Class II facility cask (Figure 4.2-18) is a double end loading shielded container, weighing approximately 67,000 lbs (30,391 kg). The facility cask consists of two concentric steel cylinders with the annulus between them filled with lead. The internal cylinder has a 30 in (76 cm) diameter and a 0.50 in (1.27 cm) wall thickness. The outer cylinder has an external diameter of 41.75 in (106 cm) with a wall thickness of 0.625 in (1.59 cm). The lead annulus is 4.75 in (12.1 cm) thick. The facility cask has two support trunnions located approximately mid length at 180° from each other. The trunnions are the support points of the facility cask transfer car. The facility cask has a Design Class II powered gate-type shield valve at each end for loading and unloading RH waste canisters. Both shield valves are electrically operated with manual overrides and have air operated, spring loaded pins that lock the valve gates closed during transit. The motor operated mechanism opens and closes the shield valves at a nominal rate of 4 ft (1.2 m) per minute. The shield valves are designed to support the weight of a fully loaded RH waste canister when they are closed. Although the facility cask has two sets of forklift pockets, the lower set is used for transport and lifting from the transfer car and placing it on the emplacement equipment. In either activity, the robustness of the facility cask serves to prevent any breach of the waste canister.

Facility Cask Transfer Car

The facility cask transfer car (Figure 4.2-19), is a self propelled railcar weighing 7900 lbs (3583 kg) and is powered by a variable speed electric motor which drives the front wheels at speeds up to 30 ft (9.1 m) per minute. The facility cask transfer car has two A-frame structures, each with a trunnion saddle to support the facility cask weight and transports the facility cask in the stable horizontal position. It also allows rotating the facility cask on its trunnions to the vertical position by the facility cask rotating device working jointly with the facility cask front pivot pins.

The Facility cask transfer car is designed to perform the following functions:

- Serve as the platform for the facility cask in the Facility Cask Loading Room.
- Transport the facility cask from the Facility Cask Loading Room to the waste shaft conveyance.
- Serve as the platform for the facility cask while the facility cask is transported underground by the waste shaft conveyance.
- Transport the facility cask from the waste hoist conveyance to an underground area accessible by the 41-ton forklift.

Facility Cask Rotating Device

The Design Class IIIA facility cask rotating device is a floor mounted hydraulically operated structure designed to rotate the facility cask from the horizontal position to the vertical position for waste canister loading and then back to the horizontal position after the waste canister has been loaded into the facility cask (Figure 4.2-20). Hydraulic rams are attached to the center of the connecting beams of two rotating arms. One end of each rotating arm is attached to a pivot point on the floor mounted structure. The other end of each rotating arm latches to a pivot pin on the facility cask top shield valve enclosure. The hydraulic rams extend to raise the facility cask to the vertical position and retract to lower the facility cask to the horizontal position.

6.25 Ton Grapple Hoist

The Design Class IIIA grapple hoist is mounted to the ceiling of the Facility Cask Loading Room. The hoist is gear driven by a two speed induction motor for operation at 8 and 24 ft (2.4 and 7.3 m) per minute. A torque monitoring control system is provided to indicate output torque of the motor and to furnish a signal to shut the hoist down if the load is excessive. In the event of a power failure, the grapple hoist brakes are automatically set. Figure 4.2-21 shows the 6.25-ton grapple hoist, the shield bell, and the stationary alignment sheave.

Stationary Alignment Sheave

The stationary alignment sheave (single cable pulley) is anchored to the Facility Cask Loading Room ceiling above the cask loading station. The stationary alignment sheave is used to convert the horizontal travel of the hoist cable to vertical travel of the facility grapple. The cable passes over the pulley and down to the block in the top of the shield bell. The cable then extends back to the ceiling where it is attached to the ceiling anchored tension load cell assembly. This arrangement provides a accurately positioned vertical lift for the facility grapple even though there is a lateral shift of the cable on the hoist drum. A limit switch, also part of the stationary alignment sheave, is mounted on a bracket attached to the pulley housing is used to sense the upper travel limit of the shield bell.

Facility Grapple

The Design Class IIIA facility grapple (Figure 4.2-22) is a special lift fixture that is designed to engage a standard WIPP pintle. The facility grapple has an axially mounted electrically operated actuator that rotates a drive gear that drives three lifting lugs into or out of engagement under the WIPP pintle. In the event of a power failure when the facility grapple was engaged on a lifting pintle, the lifting lugs would automatically lock in place.

Telescoping Port Shield

The Design Class II telescoping port shield (Figure 4.2-23) is mounted in the floor of the Facility Cask Loading Room, centered directly over the Transfer Cell ceiling shield valve opening. An electrical motor driven jacking system is used to raise the telescoping port shield to mate with the facility cask lower shield valve during RH waste canister transfer. The telescoping port shield has a 36 in (91.4 cm) inside diameter for the RH waste canister to pass through.

Shield Bell and Block

The Design Class II shield bell (Figure 4.2-24) is a heavy walled steel casting that is used to provide shielding from the waste canister when the facility cask top shield valve is open. The shield bell has internal cavities to house the facility grapple and the grapple support block. The grapple cavity is 18.25 in (46.4 cm) in diameter. The grapple support block cavity is a modified tee-shaped, nominally 6 in (15.2 cm) wide, to house the single pulley block and provide a path for the grapple electrical cable to pass through to the grapple. There are three penetrations with bronze bushings through the top of the shield bell, two for the wire rope that moves the facility grapple and one for the electrical cable that controls the opening and closing of the facility grapple. When not in use, the shield bell rests on the top of the facility grapple support block which is suspended from the grapple hoist. The shield bell is supported by the facility cask when the facility grapple is in use.

Underground RH Waste Handling Equipment

The underground handling and emplacement equipment consists of diesel-powered forklifts and the horizontal emplacement and retrieval equipment (HERE). Since the RH waste handling equipment is the largest equipment transporting waste in the waste disposal area, its size is used to define the minimum operating sized opening of 11 ft (3.35 m) vertical and 14 ft (4.3 m) horizontal for waste handling transport.

Horizontal Emplacement and Retrieval Equipment (HERE)

The Design Class IIIA HERE is used in the Underground to transfer a RH TRU waste canister from the facility cask into a horizontal disposal borehole. The HERE includes the following equipment:

Waste Transfer Equipment

- Alignment fixture
- Shield collar
- Leveling platform
- Staging platform
- Facility cask
- Portable power cable
- Control console
- Transfer carriage
- Transport equipment

Borehole Related Components

- Shield plug
- Shield plug carriage
- Strongback

Alignment Fixture

The alignment fixture (Figure 4.2-25) provides a reference plane for aligning the waste transfer machine with respect to the borehole to allow waste canister and shield plug installation. It is a welded carbon steel structure consisting of a base plate with three hydraulic jacks and a vertical face plate with holes for attaching and bolting the shield collar. It has two forklift pockets to facilitate its moving. The horizontal base of the fixture serves to support the front end of the waste transfer machine. It has two alignment pins located to ensure that the waste transfer machine and shield collar line-up.

The three hydraulic jacks are used to align the alignment fixture with the bore hole. The hydraulic system is powered by a hydraulic pump with a custom built 20 gal (75.7 L) hydraulic tank located on the Alignment Fixture Assembly. Each of the jacks have a maximum stroke of 10 in (25.4 cm). The alignment fixture has three tilt sensors and three proximity switches. The tilt sensors provide tilt information to permit the operator to level the alignment fixture. The proximity switches sense the gap between the shield collar and the facility cask.

The alignment fixture has four hydraulic locking clamps rated at 3600 psi (253.1 kg/cm^2), to lock the shield collar to the facility cask. The alignment fixture also has a passive fire suppression system with four discharge nozzles aimed at the hydraulic power unit and the leveling jacks.

Shield Collar

The shield collar (Figure 4.2-25) is a carbon steel device used when emplacing a waste canister and shield plug into a borehole. It is attached to the alignment fixture and inserted into the counterbore in the borehole to limit the dose rate during emplacement operations.

The shield collar is 29 in (73.6 cm) long, has an outside diameter of 44 in (111.8 cm) and has a 7 in (17.8 cm) wall thickness. A one inch (2.54 cm) thick, 62 in (157.5 cm) diameter mounting ring is welded to the outside of the collar. The mounting ring has twelve holes which are used to bolt the shield collar to the alignment fixture. The shield collar weighs approximately 6,800 lb (3084.4 kg).

Leveling Platform

The leveling platform is a steel frame 300 in (762 cm) long, 113 in (287 cm) wide, and 24 in (61 cm) high on which the components to operate and interface with the alignment fixture and staging platform are located (Figure 4.2-25). The front end of the leveling platform has two holes that sit on the alignment fixture alignment pins. A motor driven hydraulic pump operates a hydraulic jack, which is located at the rear of the leveling platform. The jack is used to align the waste transfer machine (leveling platform, staging platform, and transfer carriage) axis with the alignment fixture.

Three sets of rails are mounted on each side of the leveling platform. The rails provide a mounting surface for the staging platform. The staging platform positions the front face of the facility cask against the shield collar at a speed of 6.7 in (17 cm) per minute.

Staging Platform

The staging platform is a steel frame 288.5 in (732.8 cm) long that rests on roller bearings which engage and ride on the rails of the leveling platform. The staging platform supports the facility cask and transfer carriage, and has a hydraulic ram providing linear motion to the transfer carriage. The transfer carriage rides on two 123.5 in (313.7 cm) long rails bolted to the top of both sides of staging platform. The staging platform requires a regulated compressed air supply to operate the facility cask lock pins. Figure 4.2-25 shows the staging platform.

The following control devices are mounted on the staging platform: A tilt sensor used to monitor the longitudinal tilt of the waste transfer machine for alignment with the alignment fixture. Two position detection limit switches (interlocks) which are activated when the shield plug carriage is seated on the staging platform rails.

Transfer Carriage

The transfer carriage (Figure 2.4-25) is a large steel shield cylinder with its own hydraulic system that is used to push either the waste canister from the facility cask into the borehole or the shield plug from the shield plug carriage into the borehole.

The rear end of the transfer carriage houses the transfer mechanism and includes heavy wall shielding to prevent exceeding radiation dose rate limits when the facility cask top shield valve is opened. The transfer carriage housing is a steel cylinder 91.25 in (231.8 cm) long, 30 in (76.2 cm) inside diameter. The hydraulic drive system components which operate the transfer mechanism are mounted in or on the transfer carriage housing. The transfer mechanism and grapple are used to emplace the waste canister and shield plug into the borehole.

The transfer carriage has roller bearings which ride on the rails on the staging platform. The transfer carriage drive system, which positions the front of the housing against the facility cask during waste canister emplacement, is mounted on the staging platform. During shield plug emplacement, the transfer carriage is retracted to provide room for installing the shield plug carriage on the staging platform.

Its transfer mechanism consists of a double acting five stage, telescopic, hydraulic cylinder attached at the plunger end of the transfer carriage housing end plate. The front end of the cylinder is supported by two rollers attached to a 2.75 in (7.0 cm) thick steel plate which provides shielding and supports the grapple. The hydraulic cylinder has a 10,000 lbs min. load capacity, a 24 ft (7.3 m) stroke, and a retracted length of 70 in (178 cm). If a power failure occurs, manual means are provided to retract the transfer mechanism from a partial or fully extended position and to release the grapple.

The transfer carriage is equipped with four locking clamps to clamp the carriage to both the facility cask and shield plug carriage.

The following position sensors are mounted on the transfer carriage:

<u>Two spring-loaded reel type mechanisms</u> attached to multi-turn rotary potentiometers monitor the travel distance of the transfer carriage.

<u>Three proximity metal detecting switches</u> that activate and indicate when the transfer carriage to facility cask gap is less than 0.125 in (0.318 cm).

<u>Two grapple mounted proximity detection switches</u> to detect when the grapple comes in contact with the pintle of the waste canister or shield plug.

Shield Plug Carriage

The shield plug carriage (Figure 4.2-26) is a 74 in (188 cm) long, 0.5 in (1.27 cm) thick saddle which holds the shield plug in a horizontal position during emplacement and aligns the bottom of the shield plug with the bottom of the facility cask cavity. The shield plug carriage is placed on and supported by the rails of the staging platform. The shield plug carriage has two forklift pads to facilitate handling by a forklift.

Strongback

The strongback, weighing approximately 300 lbs (136 kg), is a 10 in (25.4 cm) I-beam, 72 in (189 cm) long forklift fixture with two forklift openings in the web of the beam (Figure 4.2-27) . The strongback is used to lift and handle a shield plug. Swivel hooks and shackles are bolted to each end of the strongback to allow the use of fabric slings to hold the shield plug.

Control Console

The control console for the HERE provides all the controls and information displays necessary to operate the waste transfer equipment. The console is connected by 25 ft (7.62 cm) long plug-in disconnect cables and is mounted on a moveable platform truck to facilitate relocation. The length of the cables allow locating the console a sufficient distance from the HERE to ensure radiation doses to the console operator are kept ALARA.

Portable Power Cable

The portable power cable is used to electrically connect the HERE to a 480 volt, 3 phase, 60 Hz power source.

Transport Equipment

The transport equipment consists of wheel assemblies that convert the leveling platform to a trailer like configuration used to move the waste transfer machine assembly from one location to another. The assembly can be towed by a forklift or tractor.

Shield Plugs

Shield plugs are 29 inches in diameter and approximately 70 inches long, including the pintle. The pintle is a standardized configuration, used for handling and for interfacing with the HERE.

The majority of the shielding material in a shield plug is at the end closest to the emplaced canister (away from the open end of the borehole). There are two different types of shield plugs. One uses concrete for shielding and has a High-Density Polyethylene (HDPE) jacket. The other uses cast iron for shielding and has a steel jacket.

Concrete shield plugs have concrete shielding material at both ends. The end closest to the canister has approximately 20 inches of concrete, while the pintle end has about 12 inches. Both sections of concrete are cast in the HDPE jacket around a length of pipe that goes through the center of the shield plug. Plates are attached to the pipe to secure the two sections of concrete. Concrete shield plugs weigh approximately 2,000 pounds.

Metal shield plugs have a minimum of 5-1/8 inch thick cast iron shielding at the end closest to the canister. A pipe attached to the cast iron shielding extends through the center of the shield plug. It is also attached to the steel jacket. Metal shield plugs weigh about 1,500 pounds.

Shield plugs are transported by a forklift using the strongback and slings. Figure 4.2-28 shows the waste canister and shield plug inside the storage borehole.

41-Ton Forklift

The 41-ton diesel powered forklift has a lift capacity of 82,000 lb (37,194.6 kg) and a maximum lift height of 99 in (251.5 cm). The forklift is provided with a two range (high or low) travel selector, but does not have a speed indicator. It is used in the Underground to lift the facility cask from the facility cask transfer car and transport it at a speed of approximately 3 to 4 mi (4.8 to 6.4 km) per hour to the active RH waste emplacement room and to place it on the waste transfer machine assembly. It is also used to transport the waste transfer machine assembly. Figure 4.2-29 shows the 41-ton forklift placing the facility cask on the waste transfer machine assembly.

20-Ton Forklift

The 20-ton diesel powered forklift has a lift capacity of 40,000 lb (18,143.7 kg) and a maximum lift height of 84 in (213.3 cm). It is used in the Underground to lift and handle the waste transfer machine assembly and the alignment fixture assembly (alignment fixture and shield collar).

6-Ton Forklift

The 6-ton diesel powered forklift has a lift capacity of 12,000 lb (5,443.1 kg) and a maximum lift height of 72 in (182.9 cm). It is used in the Underground to lift and handle the shield plug carriage and the shield plug using the strongback.

4.2.1.1.2 Building 412

Building 412 is Design Class IIIA; however, the structural portions of the building are Design Class II because of its interface with the WHB. Building 412 provides space and equipment for minor scheduled and unscheduled maintenance activities and includes a 25-ton overhead crane.

4.2.1.1.3 WHB Support Areas

WHB support areas, common to both the CH TRU and RH TRU areas of the WHB, include the waste hoist support areas and the main mechanical equipment room containing the HVAC equipment.

Air locks are located on both the CH TRU and RH TRU sides of the waste hoist, including the conveyance loading room on the CH TRU side of the waste hoist and the Facility Cask Loading Room on the RH TRU side of the waste hoist. Access doors to the waste hoist are interlocked to control air flow; which is towards the waste hoist from the CH TRU loading room or from the RH TRU Facility Cask Loading Room.

The waste hoist control room provides space and equipment needed for operation of the waste hoist and controls for operating the waste hoist in either manual or automatic mode.

The main mechanical equipment room of the WHB houses the exhaust fans, HEPA filters, and the associated ducting that controls ventilation flow within the WHB.

4.2.1.1.4 Waste Handling Building Effluent Monitoring System

The WHB exhaust system is Design Class IIIA, the supply system is Design Class IIIB, and the HEPA filters and isolation dampers are Design Class II. The WHB ventilation system has a single discharge point, with most of the air coming from the WHB being processed through a prefilter and two stages of HEPA filters prior to its release to the environment. Some of the air may go down the waste shaft (Section 4.4.3.1). Station C is located downstream of the HEPA filters and provides fixed air sampling to quantify the total amount, if any, of radioactivity released to the environment.

4.2.1.2 Exhaust Filter Building

The Exhaust Filter Building (EFB), adjacent to the exhaust shaft, contains the HEPA filtration equipment associated with the underground ventilation system. During normal operations, air is pulled from underground areas, up the exhaust shaft, and discharged to the environment without the HEPA filtration units in service. In the event of an underground radiological event, airflow from the underground is diverted through the HEPA filtration to remove airborne radioactive particulates from the air stream. The underground ventilation system is discussed in Section 4.4.3.3, and the EFB layout is shown in Figure 4.2-30.

The EFB structure is classified as Design Class IIIA, the HEPA filters and isolation dampers are Design Class II. The major areas within the EFB are the filter room and support area. The filter room houses the HEPA filtration units. The support area includes two mechanical equipment rooms housing the building filtration units, the exhaust fans, the supply-air handling units, the motor control centers, and the air lock.

The EFB effluent monitoring system is composed of Station A which obtains its sample from a point 21 ft (6.4 m) below ground level in the exhaust shaft and Station B which obtains its sample from a point downstream from the EFB HEPA filtration system. Each station contains fixed air samplers operated by the WIPP, one each for WIPP, the Carlsbad Environmental Monitoring and Research Center (CEMRC), and the Environmental Evaluation Group (EEG), quantifying the total amount of radioactivity released to the environment.

4.2.1.3 Water Pumphouse

The Water Pumphouse, adjacent to the two water storage tanks (Figure 4.1-2a), contains two fire water pumps (one electric and one diesel), three electric domestic water pumps, and water chlorination equipment and chemical storage. The Water Pumphouse is an above ground steel frame and siding building classified as Design Class IIIB.

4.2.1.4 Support Building

The Support Building, adjacent to the WHB, houses general support services for activities at the WIPP facility. The Support Building is constructed of steel framing and sandwich panel siding, and is classified as Design Class IIIA. The main lateral force-resisting members of the Support Building are designed for DBE and DBT to protect the WHB from their structural failure.

4.2.1.5 Support Structures

The following support structures are designed to the Uniform Building Code (UBC), and are classified as Design Class IIIB support structures.

- Salt Handling Shaft Head Frame and Hoist House
- Air Intake Shaft Head Frame and Hoist House
- Main Warehouse Building
- Guard and Security Building
- Main Gatehouse
- Safety and Emergency Services Building
- Compressor Building
- Engineering Building
- Training Building

4.2.2 Shaft and Hoist Facilities

4.2.2.1 Shaft and Hoist General Descriptions

The WIPP facility utilizes four shafts:

- Waste Shaft
- Salt Handling (SH) Shaft
- Exhaust Shaft
- Air Intake Shaft (AIS)

These shafts are vertical openings extending from the surface to the underground disposal level as shown on Figure 4.1-2a, which shows the location of the shafts relative to surface features. All shaft construction and mining operations are in accordance with 30 CFR 57.[1]

The waste hoist system is designated as a Design Class IIIA; and, the SH shaft, the exhaust shaft, and the AIS hoist system are designated as Design Class IIIB. The waste shaft, SH shaft and AIS shaft are designed to resist the dynamic forces of the hoisting system. Shaft linings are designed based on expected hydrostatic heads in the Rustler Formation.

4.2.2.2 Shaft and Hoist General Features

The principal components of each shaft are the shaft collar (extending from above the ground surface to the top of the bedrock), the shaft lining (extending from the bottom of the collar to the top of the salt formation at about 850 ft (259 m) below the surface), and the key section that terminates the lining in the salt formation, with the remainder of each shaft being unlined.

The shaft collars are situated about 400 ft (122 m) above the historic flood plain of the Pecos River and the collar slab around the shaft, where used, is at a higher elevation than the surrounding ground.

The waste shaft, the SH shaft, and the AIS are equipped with conveyances with hoist towers constructed of structural steel. The conveyances in the waste shaft and AIS are guided by steel cables (guide ropes), while the SH shaft conveyance is guided by fixed wooden guides equipped with safety dogs. The waste shaft is equipped with catch sprags in the hoist tower to prevent the conveyance or the counterweight from falling into the shaft if the conveyance over-traveled against the upper crash beam and the hoist ropes failed.

The waste hoist and SH hoist have redundant brake systems designed so that either set of brakes can stop a fully-loaded conveyance under all conditions. In the event of a power failure, the brakes will set automatically. The AIS hoist is also equipped with two sets of brakes.

The control system for each hoist can detect malfunctions or abnormal operations (such as over-travel, over-speed, power loss, circuitry failure, or starting in a wrong location), trigger an alarm for the abnormal operation, and automatically shut down the hoist.

4.2.2.3 Shaft and Hoist Specific Features

The main purpose of the waste hoist system is for moving radioactive waste from the surface to the underground. The system can be used to remove radioactive waste from the disposal area if required. It is also used to transport personnel, material and equipment. The system supports maintenance in the waste shaft. The equipment that is part of this system is the waste hoist equipment installed in the WHB, the headframe, shaft switches, and the conveyance. The hoist systems in the shafts and all shaft furnishings are designed to resist the dynamic forces of the hoisting operations (these forces are greater than the seismic forces on the underground facilities). In addition, the waste hoist headframe is designed to withstand a DBE (the DBE is defined in Section 3.2.7). The waste hoist is equipped with a control system that will detect malfunctions or abnormal operations of the hoist system (such as over-travel, over-speed, power loss, circuitry failure, or starting in a wrong direction), will trigger an alarm for that condition and automatically shut down the hoist. The waste shaft and hoist arrangement is shown on Figure 4.2-31.

The inside diameter of the unreinforced concrete-lined upper portion of this shaft is 19 ft (5.8 m). The waste hoist conveyance (outside dimensions) is approximately 30 ft (9.15 m) high by 11 ft (3.35 m) wide by 15 ft (4.6 m) deep, and carries a maximum payload of 45 tons. The conveyance contains an upper and lower deck. During loading and unloading operations, the conveyance is steadied by fixed guides. At the underground waste hoist station, rope stretch is removed by a chairing device that supports the weight of the conveyance and payload.

The waste hoist is an electrically driven friction hoist. The 600 HP DC voltage waste hoist motor is designed for a maximum operating speed of 13.5 RPM. The motor's field is formed by wound poles, and is supplied with a constant DC current obtained from rectifying a 480 volt three-phase supply. The DC voltage magnitude and direction controls the speed and direction of the hoist. The maximum rope speed of the waste hoist is approximately 500 ft (152.4 m) per minute. There is one silicon controlled rectifier (SCR) power supply to power the hoist. The brake system can safely stop and hold the conveyance without the drive motor. Automatic control circuitry will sense electrical problems with the drive motor and stop the hoist.

There are two brakes, mounted approximately 180 degrees apart, on each braking flange of the hoist wheel. These disc brakes (four total) are spring set, and are released by hydraulic pressure. Brake switches indicate brake set, release, and wear. A redundant hydraulic power supply exists to supply hydraulic pressure to release the brakes. Each hydraulic unit has its own motor, pump, and oil reservoir. There is an automatic switch over from the primary system to the standby system if the hydraulic pressure decreases below the set point. There is no automatic switch over from the standby system to the primary system. A timed back up pressure relief path exists to set the brakes if for any reason the brake pressure is not released within a few seconds after the application of the brake set signal.

Hoisting, tail, and guide ropes are provided for the safe operation of the conveyance and the counterweight. The hoisting ropes are 1-3/8" (3.5 cm) diameter, fully locked coil bright steel ropes suitable for use with a friction hoist. The tail ropes are 2-1/4" (5.7 cm) diameter, non-rotating bright steel, with a synthetic fiber core. The three tail ropes approximately balance the weight of the six hoisting ropes. The guide ropes are 1-3/4" (4.45 cm) diameter, half-lock bright steel with internal and external lubrication and are designed to operate with minimal field lubrication only. There are four guide ropes for the conveyance and two guide ropes for the counter weight. Tension in these ropes is maintained by weights on the bottom of the ropes. The size of the weights are different to prevent harmonic vibrations during hoist operation.

A conveyance and counterweight over-travel arrester system exists to stop movement if the normal control system has failed. Four timbers are provided at the tower and the sump regions for both the conveyance and the counterweight to assist in absorbing energy to stop an over traveling conveyance or counterweight. Retarding frames rest in notches either at the top of the wood arresters (sump area), or at the bottom of the wood arresters (tower area). The retarding frames have knives that cut into the timbers if driven by the conveyance or the counterweight.

If the conveyance over-travels against the upper crash beams and the hoist ropes fail, safety lugs on the conveyance mate with pivoting dogs on the catchgear mounted in the head frame to prevent the conveyance from falling if the ropes break. The counterweight catchgear system functions in a similar fashion to stop the counterweight from falling. Each catchgear frame is mounted on a hydraulic shock absorber which absorbs energy from a descending conveyance or counterweight. Lever arms are used to raise the pivoting dogs if they are not supporting any weight.

Emergency stop buttons are provided at the Master Control Station (MCS) and at all control stations to effect an emergency stop of the hoist. These buttons are operable in all modes of hoist operation, and when pressed, will open the control power loop and set the hoist brakes. These buttons provide the most rapid means of bringing the hoist to a stop. A controlled stop button that will decelerate the conveyance before setting the brakes is located on the control panel, to the left of the MCS. The controlled stop is a slower and softer stopping action than the emergency stop.

Eleven signals, two analog and nine contact, are used during Waste Hoist operations and are transmitted to the CMR for remote monitoring. The analog signals are the hoist motor voltage and amperes. The contact signals are "Hoist Operation, Manual", "Hoist Operation, Semi-Auto", "Hoist, Abnormal Condition", "Emergency Stop", "Men Working in Shaft", "Waste on Hoist", "Personnel on Hoist", "Hoist, Up", and "Hoist, Down".

The waste hoist Signaling System consists of bells and lights activated by the operators at the MCS and the operating stations.

The SH shaft is used to transport mined salt to the surface and to provide personnel transportation between the surface and the underground horizon. It also acts as a duct for supplying air to the underground mining and disposal areas, and is one route for the power, control, and communications cables. The hoist's maximum rope speed is approximately 1,800 ft (548.6 m) per minute. The shaft inside diameter is 10 ft (3.05 m) for the steel lined portion, and 11 ft 10 in (3.6 m) for the unlined portion.

The exhaust shaft is used as the opening to exhaust air from the underground disposal areas to the surface. The inside diameter of the lined portion of this shaft is 14 ft (4.3 m). The shaft lining is unreinforced concrete. The shaft key incorporates polymeric chemical water seal rings. The exhaust shaft collar does not utilize a building or head-frame, and is sealed at the top by a 14 ft (4.3 m) diameter elbow that diverts exhaust air into the exhaust ventilation system.

The AIS is used primarily to supply the fresh air to the underground areas, and is also used for backup egress of personnel between the surface and the underground horizon. The hoist's maximum rope speed is approximately 830 ft (253 m) per minute. The inside diameter of the unreinforced concrete lined upper portion of this shaft is 16 ft (4.9 m).

4.2.3 Subsurface Facilities

4.2.3.1 General Design

The subsurface facilities are located 2,150 ft (655 m) below the surface and include the waste disposal, north, and support areas. The underground support areas contain the facilities to service and maintain all underground equipment for mining and waste disposal operations, monitor for radioactive contamination, and allow limited decontamination of personnel and equipment. The mining, north, and waste disposal areas are isolated from each other by air locks and bulkheads. Some mining construction activities may be required within an active disposal panel, however, these activities can be separated from the disposal processes and areas by schedule (time), ventilation controls, and temporary bulkheads.

The underground support facilities and their ventilation flows in the shaft pillar area are shown on Figure 4.2-32.

The support facilities on the disposal side provide a maintenance area, a vehicle parking area with plug-in battery charging, and a waste transfer station.

The support facilities on the mining side consist of a vehicle parking area, electrical substation, welding shop, a warehouse, offices, materials storage area, emergency vehicle parking alcoves, a diesel equipment fueling station, and a mechanical shop.

An experimental area, separate from the other areas of the underground repository, contained areas for evaluating the interaction of simulated waste and thermal sources on bedded salt under closely monitored, controlled conditions. The experimental area was deactivated in September 1996. The deactivation was accomplished by the construction of two light weight cementitious block walls. The walls are located just north of the N780 drift in the E300 and E140 entries. The light weight cementitious walls not only serve as a barricade preventing access, but also isolate and prevent any measurable ventilation from entering or exiting the deactivated area. (Portions of this area were re-entered for the permanent disposal of salt mined from Panel 2 and are being maintained open).

Underground mining procedures and cavity dimensions incorporate the results of the salt creep analysis in DOE/WIPP 86-010, Waste Isolation Pilot Plant Design Validation Final Report.[2]

The mining area fuel dispensing room is in an alcove off the mining exhaust entry. This fuel dispensing room provides a location and pumping facilities for a portable fuel tank. The portable diesel tank hoisting and lowering is done through the waste shaft, or the SH shaft as required. An automatic dry chemical fire suppression system, with main and reserve tanks, is provided in the fueling area. Any fire generated smoke and fumes would be exhausted directly to the exhaust ventilation system.

4.2.3.2 TRU Waste Disposal Area

The disposal area (Figure 4.1-3) provides space for 6.2×10^6 ft^3 (1.76×10^5 m^3) of TRU waste material in TRU waste containers of which up to 2.5×10^5 ft^3 (7.08×10^3 m^3) can be RH TRU waste. This area also includes the four main entries and the cross-cuts that provide access and ventilation. Figure 4.2-33 shows a typical waste container disposal configuration.

The ribs (pillars or walls) of the disposal rooms and entries are used for storing RH TRU waste canisters. Although RH TRU waste and CH TRU waste can be disposed in the same rooms, all RH waste emplacement in a room must be complete before CH waste can be emplaced in that room.

The amount of TRU waste in each panel/room is limited by thermal, structural, and physical considerations, and emplacement is designed not to exceed 10 kW/acre. Based on current design and thermal constraints, a spacing of approximately 30 in between centers for RH TRU waste canisters has been specified, and a shield plug provides shielding between the canister and the room.

Typically main entries and cross cuts in the repository provide access and ventilation to the disposal area. The main entries link the shaft pillar/service area with the disposal area and are separated by pillars. Typical entries are 13 ft (4.0 m) high and 14 to 16 ft (4.3 to 4.9 m) wide. Each of the panels labeled Panels 1 through 8 will have seven rooms. The locations of these panels are shown in Figure 4.1-3. The rooms will have nominal dimensions of 13 ft (4.0 m) high by 33 ft (10 m) wide by 300 ft (91 m) long and are separated by 100 ft (30 m) wide pillars.

If waste volumes disposed of in the eight panels fail to reach the stated design capacity, the DOE may choose to use the four main entries and crosscuts adjacent to the waste panels (referred to as the disposal area access drifts) for disposal, as follows:

E-300 will be mined to be 16 ft (4.9 m) wide and 13 ft (4.0 m) high
E-140 is mined to 25 ft (7.6 m) wide by 13 ft (4 m) high
W-030 and W-170 will be similar to E-300.

Presently, only the construction of these areas is planned. The above drifts extend from S-1600 to S-3650 (i.e., 2,050 ft [625 m] long). Crosscuts (east-west entries) will be 20 ft (6.1 m) wide by 13 ft (4 m) high by 470 ft (143 m) long. The layout of these excavations is shown on Figure 4.1-3.

Panel 1 is the first panel to be used for waste disposal, and was excavated from 1986 through 1988. Its rooms and access drifts have been rock-bolted to assure stability. Panel 1 has been re-bolted with threaded bar resin anchors. In addition, Room 1 has been supplied with a supplementary roof-support system consisting of rock bolts, steel channel sets, and a wire-mesh and lacing system. The DOE intends to mine panels in the following order:

Final ½ Panel 10 (access drifts for Panels 1,2,7, and 8)
Panel 2
Panel 9 (access drifts for Panels 3,4,5 and 6)
Panel 3
Panel 4
Panels 5 through 8

At normal operating (waste throughput) rates, rock bolting in Panels 2 through 8 may only be required locally (i.e. spot bolting). Rock fixtures used at WIPP comply with 30 CFR 57, [1] Subpart B. Each ground control support system installation is individually assessed and evaluated. As a result they vary from time to time and place to place.

A discussion of the design life of underground disposal rooms is included in Section 4.3.9. An evaluation of the effective life of the underground rooms in Panel 1 was performed during April 1991, by a panel of geotechnical experts. The panel members concluded that if no additional remedial measures were taken, the rooms in the panel would likely have a total life of seven to eleven years from the time of excavation using the installed roof support system, consisting of patterned mechanically anchored rockbolts. Experience in Panel 1 confirmed the conclusion of the expert panel.

Plans call for bolt systems installed in the future to equal or exceed the bearing characteristics of the bolts used in the primary pattern in Panel 1. The configuration of Panel 2 through 8 will be similar to Panel 1, therefore; the performance of these rooms should be similar to those in Panel 1. Supplementary support systems will further extend the effective life of the rooms, should they be required. A detailed discussion of initial and supplementary support systems is included in Section 4.3.9.

The support system will be subjected to longitudinal and lateral loading due to the rock deformation. The anchorage components may undergo lateral deformation due to offsetting along clay seams or fractures and increasing tensile loading. Rigid, non-yielding support systems are not designed to accommodate salt creep; however, they do respond to creep and continue to provide support during ductile behavior. Yielding support systems are currently being evaluated in the WIPP underground. These systems are designed to yield at predetermined loads, and provide support over their prescribed yield interval without maintenance. Preliminary data indicate that the design and performance of some of these systems are clearly superior to rigid systems in their ability to respond to salt creep while maintaining adequate ground support.

Because the disposal area access drifts must remain open and operational for a much longer period than any panel, they will require additional consideration from time to time. They are subject to regular and systematic inspection and evaluation, and appropriate ground control measures will be implemented whenever necessary.

The DOE will ensure that any room in which waste will be placed will be sufficiently supported to assure compliance with all laws and regulations. Creep and rock failure in WIPP excavations progress slowly. As a result, many years pass before any operationally significant instability could occur. This long period allows more than sufficient time for whatever actions are appropriate, such as additional monitoring, installing supplementary support, or taking other managerial and operational actions. Support is installed to the requirements of 30 CFR 57,[1] Subpart B. Random checks are conducted by Quality Assurance/Quality Control personnel as each system is installed. Geotechnical monitoring, design, analysis, and planning are performed in addition to regulatory inspections, maintenance, and construction, as discussed in detail in Section 4.3.9.

The underground facilities ventilation system will provide a safe and suitable environment for underground operations during normal WIPP facility operations. The underground system is designed to provide control of potential airborne contaminants in the event of an accidental release or an underground fire.

The main underground ventilation system is divided into four separate flows (Figure 4.2-32): one flow serving the mining areas, one serving the northern areas, one serving the disposal areas, and one serving the Waste Shaft and station area. The four main air flows are recombined near the bottom of the Exhaust Shaft, which serves as a common exhaust route from the underground to the surface. The underground confinement/ventilation system is discussed in detail in Section 4.4.

4.2.3.3 Panel Closure System

Chapter 10 discusses the Closure Plan that describes the activities necessary to close the WIPP facility. The Closure Plan describes several types of closure. The first type is panel closure, which occurs as underground panels are filled. Secondly, final closure at the end of the Disposal Phase is described.

Following completion of waste emplacement in each underground panel, disposal-side ventilation will be established in the next panel to be used, and the panel[3] containing the waste will be closed. A panel closure system will be emplaced in the panel access drifts (Figure 4.1-3). The panel closure system is designed to meet the following requirements that were established by the DOE for the design [3]:

- The panel closure system shall consider potential flow of VOCs through the disturbed rock zone (DRZ) in addition to flow through closure components.
- The panel closure system shall perform its intended functions under loads generated by creep closure of the tunnels.
- The panel closure system shall perform its intended function under the conditions of a postulated methane explosion.
- The nominal operational life of the closure system is 35 years.
- The panel closure system for each individual panel shall not require routine maintenance during its operational life.
- The panel closure system shall address the most severe ground conditions expected in the waste disposal area.
- The design class of the panel closure system shall be IIIB (which means that it is to be built to generally accepted national design and construction standards).

- The design and construction shall follow conventional mining practices.
- Structural analysis shall use data acquired from the WIPP underground.
- Materials shall be compatible with their emplacement environment and function.
- Treatment of surfaces in the closure areas shall be considered in the design.
- Thermal cracking of concrete shall be addressed.
- During construction, a QA/QC program shall be established to verify material properties and construction practices.
- Construction of the panel closure system shall consider shaft and underground access and services for materials handling.

The final panel closure design [3] was prepared with the assumption that there would be no backfill in the disposal rooms. With the inclusion of backfill, the design has been re-examined, and it has been determined that the changes are insignificant for several reasons. First, the backfill has no effect on the gas generation rate so that the values used in the design for gas generation and methane buildup remain the same. Second, the quantity of backfill is sufficient to fill one-tenth of the void volume in the room. This results in more rapid pressurization of the room; however, the effect is small and will only be important after the facility is sealed. Third, the reduced volume will result in a faster concentration buildup of methane. This would not result in a revision of the design. Instead, it would change the criteria for installing explosion walls.

The design for the panel closure system calls for a composite panel barrier system consisting of a rigid concrete plug with or without removal of the DRZ, and either an explosion-isolation wall or a construction-isolation wall. The design basis for this closure is such that the migration of hazardous waste constituents from closed panels during the operational and closure period would result in concentrations at the WIPP facility well below health-based standards. The source term used as the design basis included the average concentrations of VOCs from CH waste containers, as measured in headspace gases through January 1995. The VOCs are assumed to have been released by diffusion through the container vents, and are assumed to be in equilibrium with the air in the panel. Emissions from the closed panel occur at a rate determined by gas generation within the waste and creep closure of the panel. Due to the relatively small amount of RH waste (approximately five percent of the total waste volume), VOC emissions from RH waste are assumed to contribute insignificantly to total VOC emissions. This design meets the environmental performance standard.

Figures 4.2-34 and 4.2.35 show diagrams of the panel closure design and installation envelopes. DOE/WIPP-96-2150 [3] provides the detailed design, and the design analysis for the panel closure system. The panel closure design is such that components can be added or removed, or their shapes adjusted depending on the particular ground conditions at the time of installation. For example, in DOE/WIPP-96-2150 [3], Option A represents the likely closure of panels less than 20 years old at the time of final facility closure, and whose entries are sufficiently intact such that DRZ removal is not needed. These would likely include Panels 6 through 8.

Option B represents the preferred option for panels that will be closed for more than 20 years prior to final facility closure, and whose entries are reasonably intact at time of closure. These will likely be Panels 2 through 5. Option C may be desirable for panels whose entries require DRZ removal, and whose closure precedes final facility closure by less than 20 years. This is the likely configuration of the closure for Panels 9 and 10. Finally, Option D may be appropriate for panels whose entries require significant removal of the DRZ, and whose closure will precede final facility closure by more than 20 years. Panel 1 is the most likely candidate for this type of closure.

The 20-year limit in the design selection process is based on what the DOE believes to be conservative analytical results that indicate methane, being generated by waste degradation at the rate of 0.1 mole per drum per year, will not reach flammable concentrations for at least 20 years. As part of the decision making process on design selection, an investigation of the DRZ would precede the selection of the concrete component and the specification of the amount of excavation that is needed. The investigation could be done using geophysical methods (such as ground penetrating radar) or drill holes. Drill holes can be investigated using video cameras or "scratchers." The DOE considers the 20-year criterion is still appropriate, since the design report shows that it takes 25 years to reach explosive limits. A ten percent reduction in this time is still beyond 20 years. Furthermore, the chances that methane will be generated initially are minimized by the fact that the closed panels will be initially oxic and may remain so for a long time after facility closure.

The DOE believes that design Options A through D will function adequately as panel closures, given the current state of knowledge about gas generation, the understanding of the DRZ, the expected characteristics of the waste, and the inability of monitoring techniques to accurately detect extremely small concentrations of VOCs. However, in the event sufficient information is collected that allows the DOE to make less conservative assumptions regarding these items, designs A through D may provide significantly more protection than is actually needed. Consequently, the DOE has retained as a design concept, Option E, which is simply the explosion wall portion of Options B and D. Option E represents a significantly simpler panel closure system that the DOE would use if either of the following criteria are met:

- Gas generation rates are smaller. Current (unreported) work being performed by Sandia National Laboratories indicates that microbial gas generation rates under humid conditions are close to zero, and/or
- The average headspace concentrations are less than the averages used in the calculations. As new wastes are generated, the use of organic solvents is expected to drastically be reduced.

Condition 1 of the Certification Decision Final Rule [4] requires that the DOE implement the Option D panel closure system at the WIPP.

References for Section 4.2

1. 30 CFR 57, Safety and Health Standards - Underground Metal and Nonmetal Mines, 8th edition, 1994.

2. DOE/WIPP 86-010, Waste Isolation Pilot Plant Design Validation Final Report.

3. DOE/WIPP-96-2150, Detailed Design Report for an Operational Phase Panel-Closure System, U.S. Department of Energy, Carlsbad Area Office, Carlsbad, New Mexico.

4. Federal Register, May 18, 1998, Part III, Environmental Protection Agency, 40 CFR Part 194.

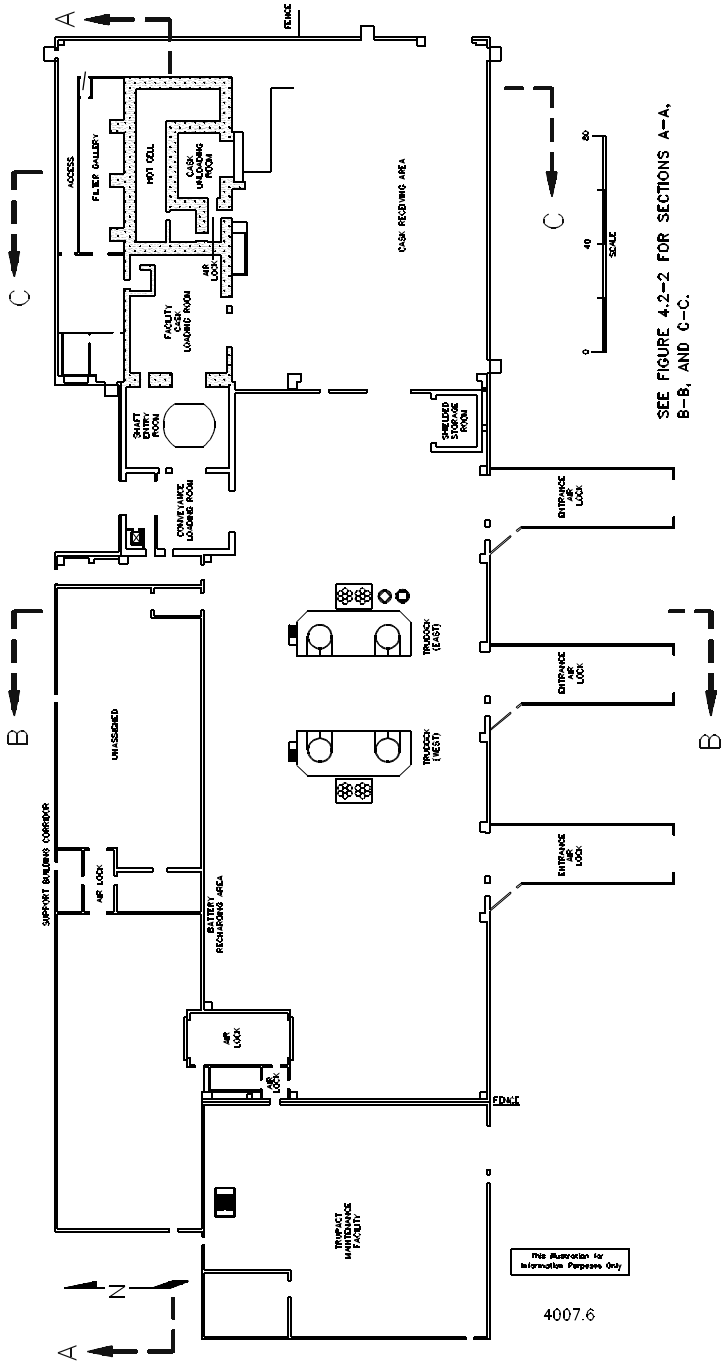

Figure 4.2-1a WHB Plan (Ground Floor)

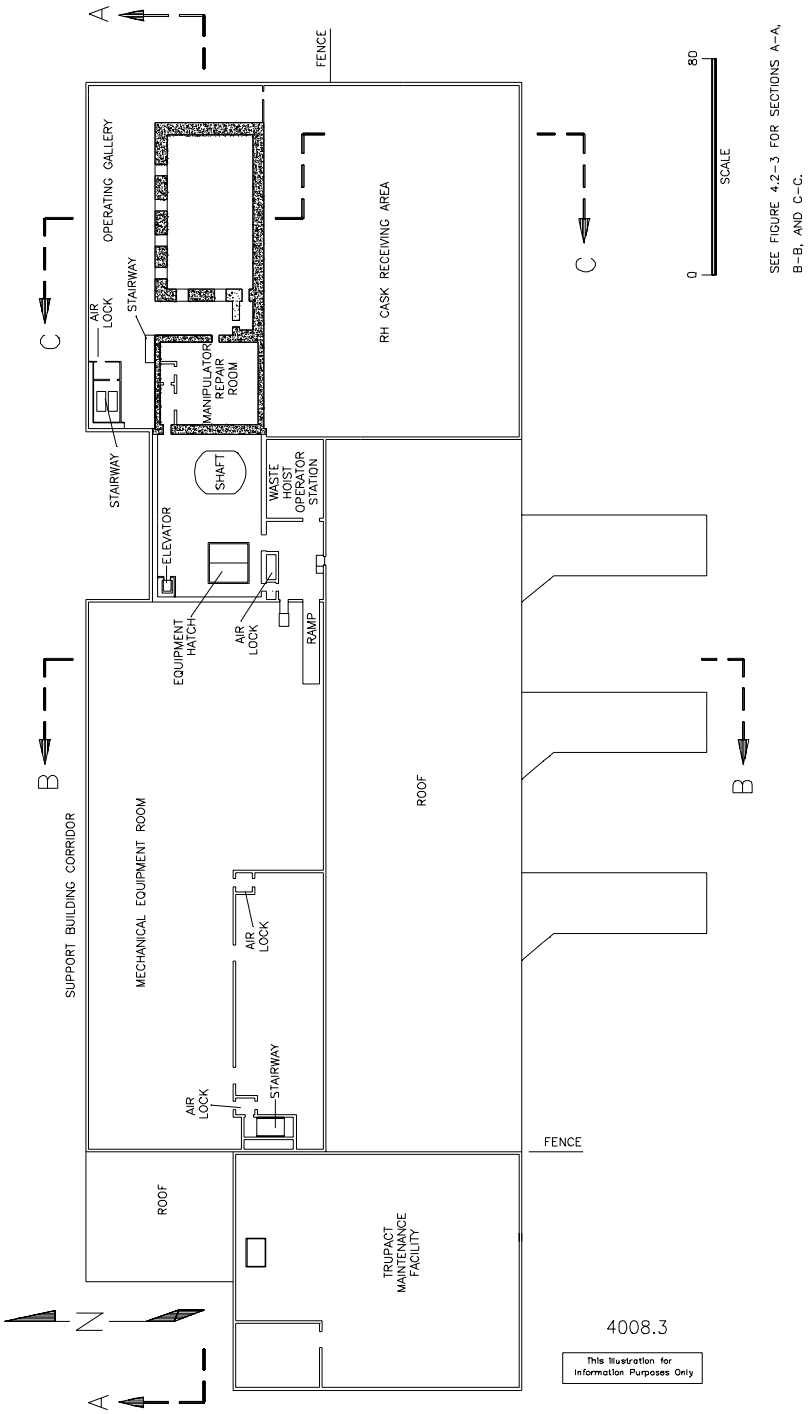

Figure 4.2-1b WHB Plan (Upper Floor)

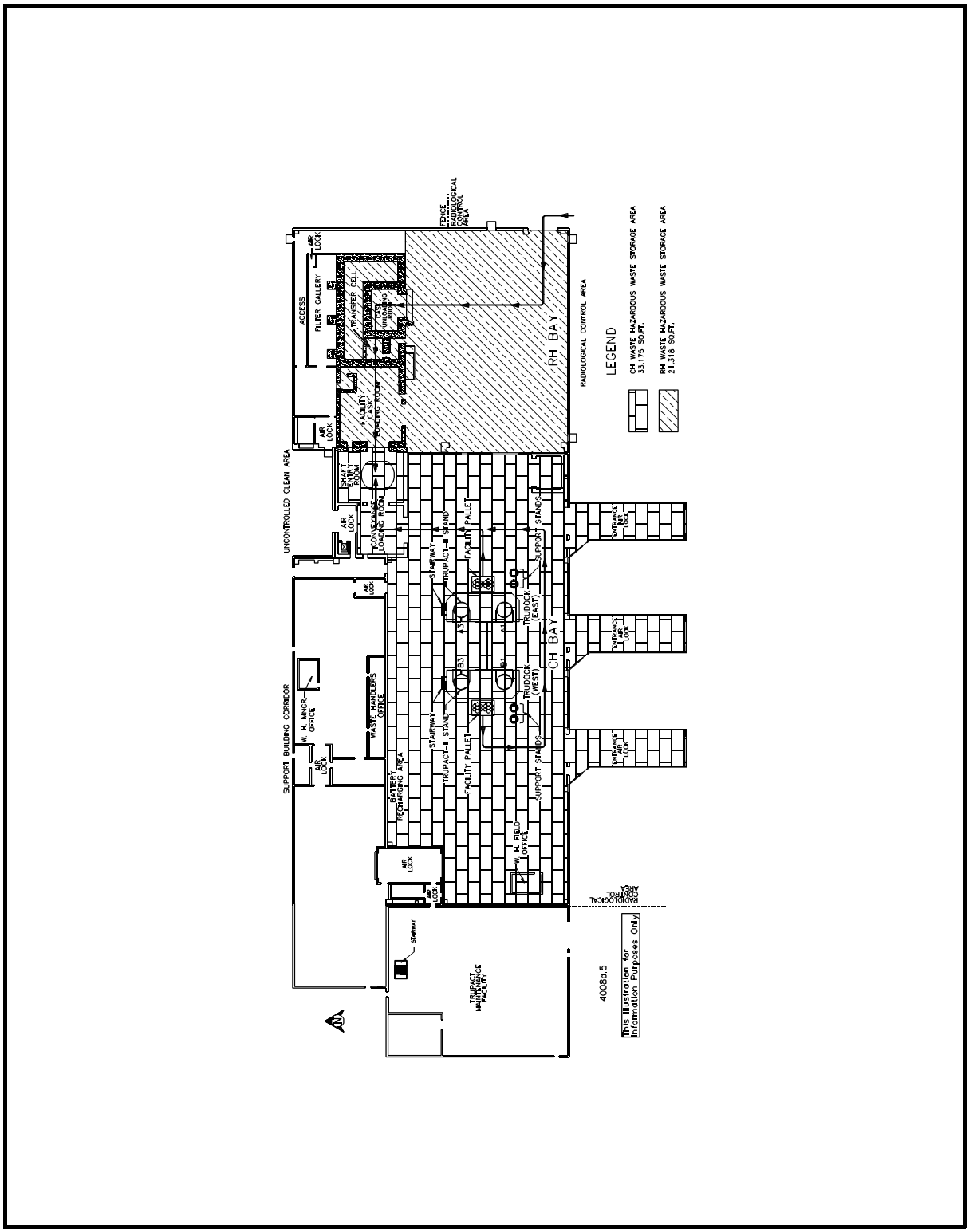

Figure 4.2-2 Waste Transport Routes in the WHB

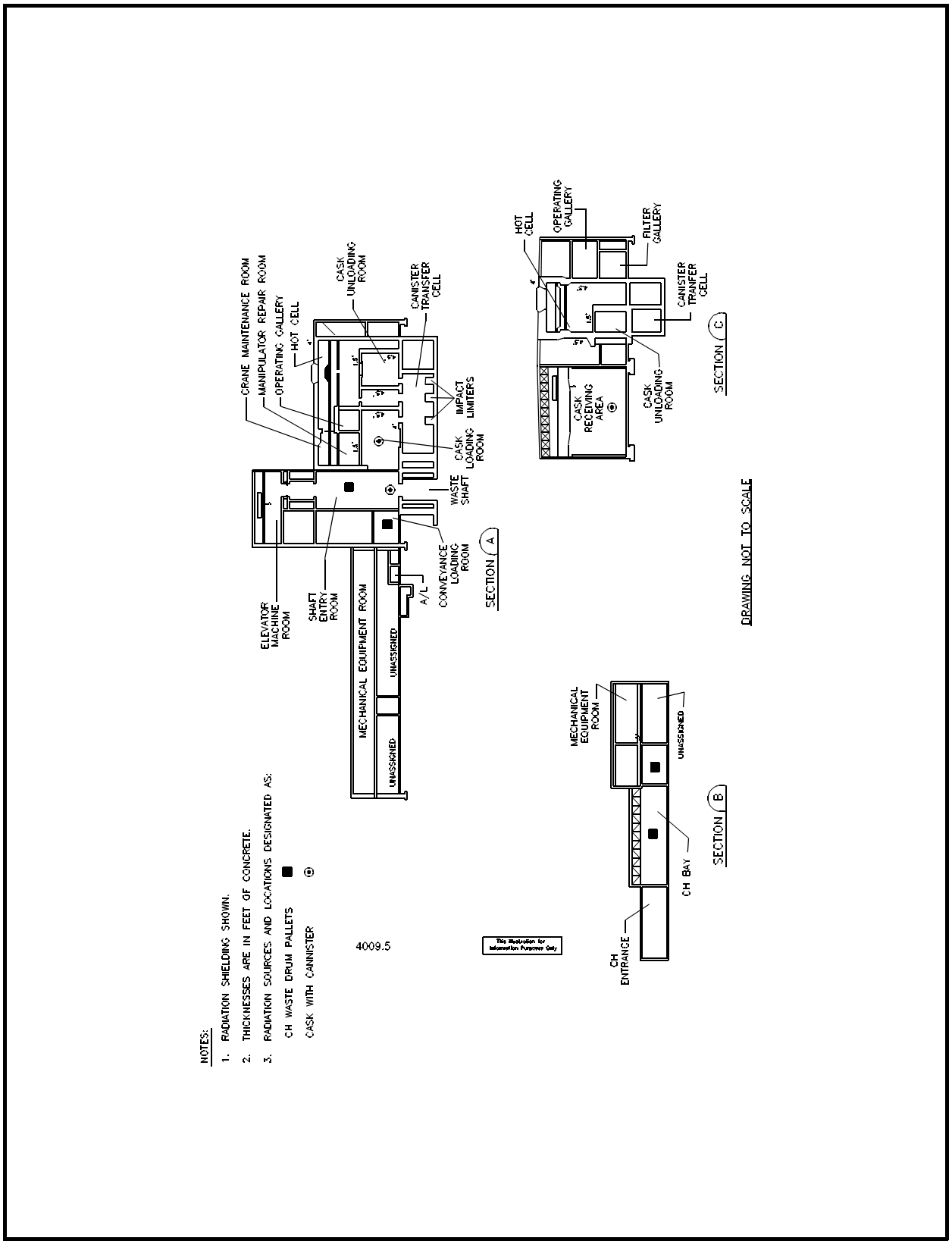

Figure 4.2-3 WHB (Sections)

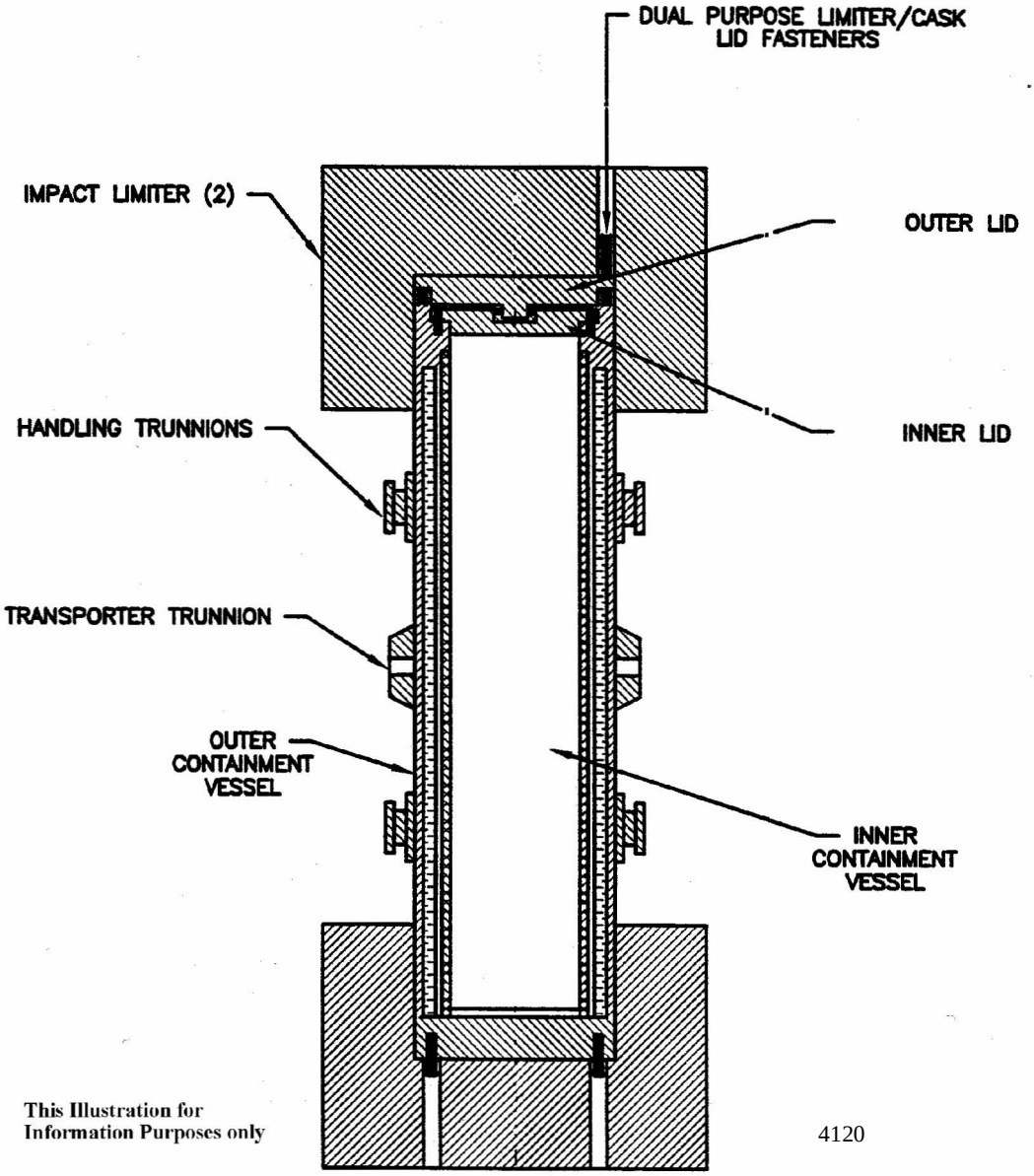

Figure 4.2-4 RH TRU 72B Road Cask

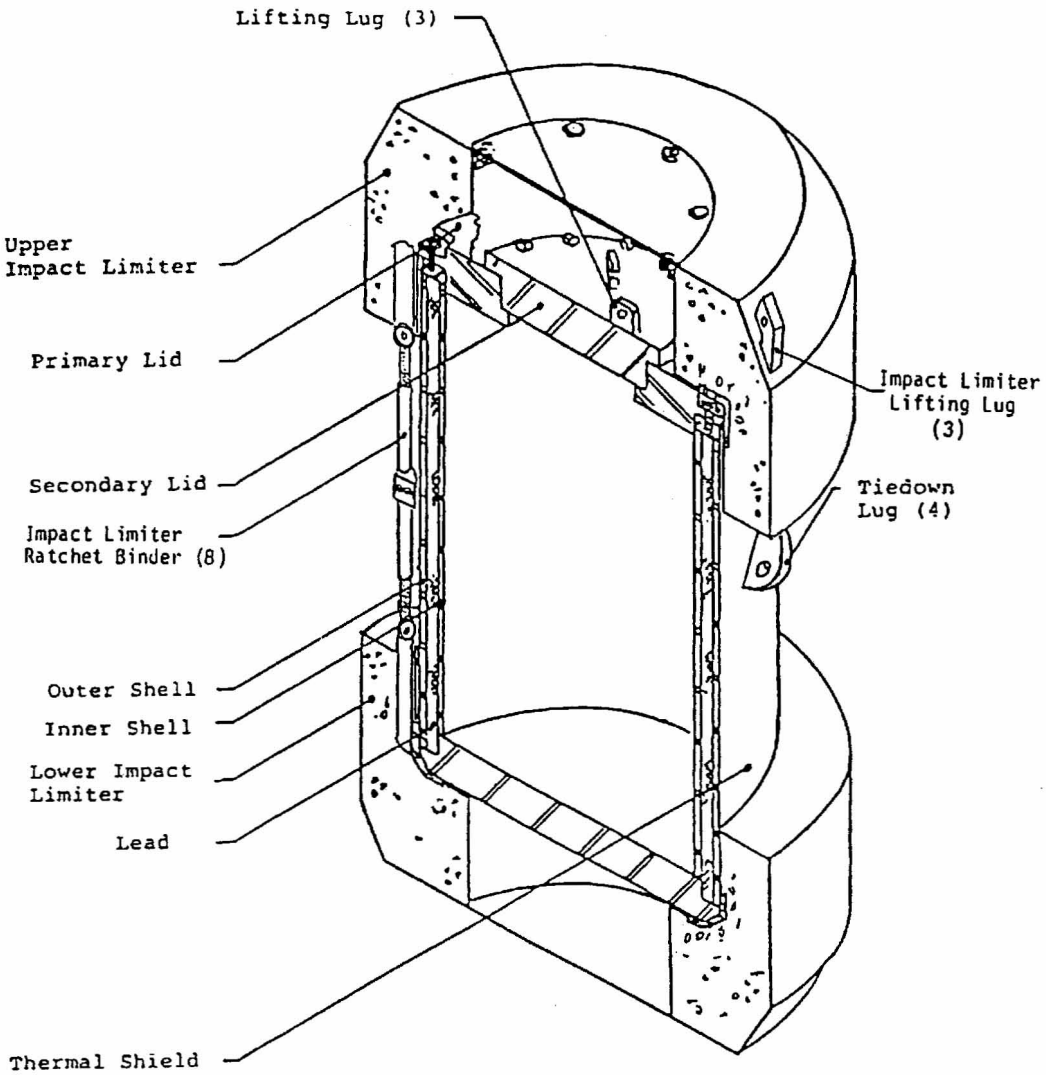

This Illustration for Information Purposes only

Figure 4.2-5 RH TRU 10-160B Road Cask

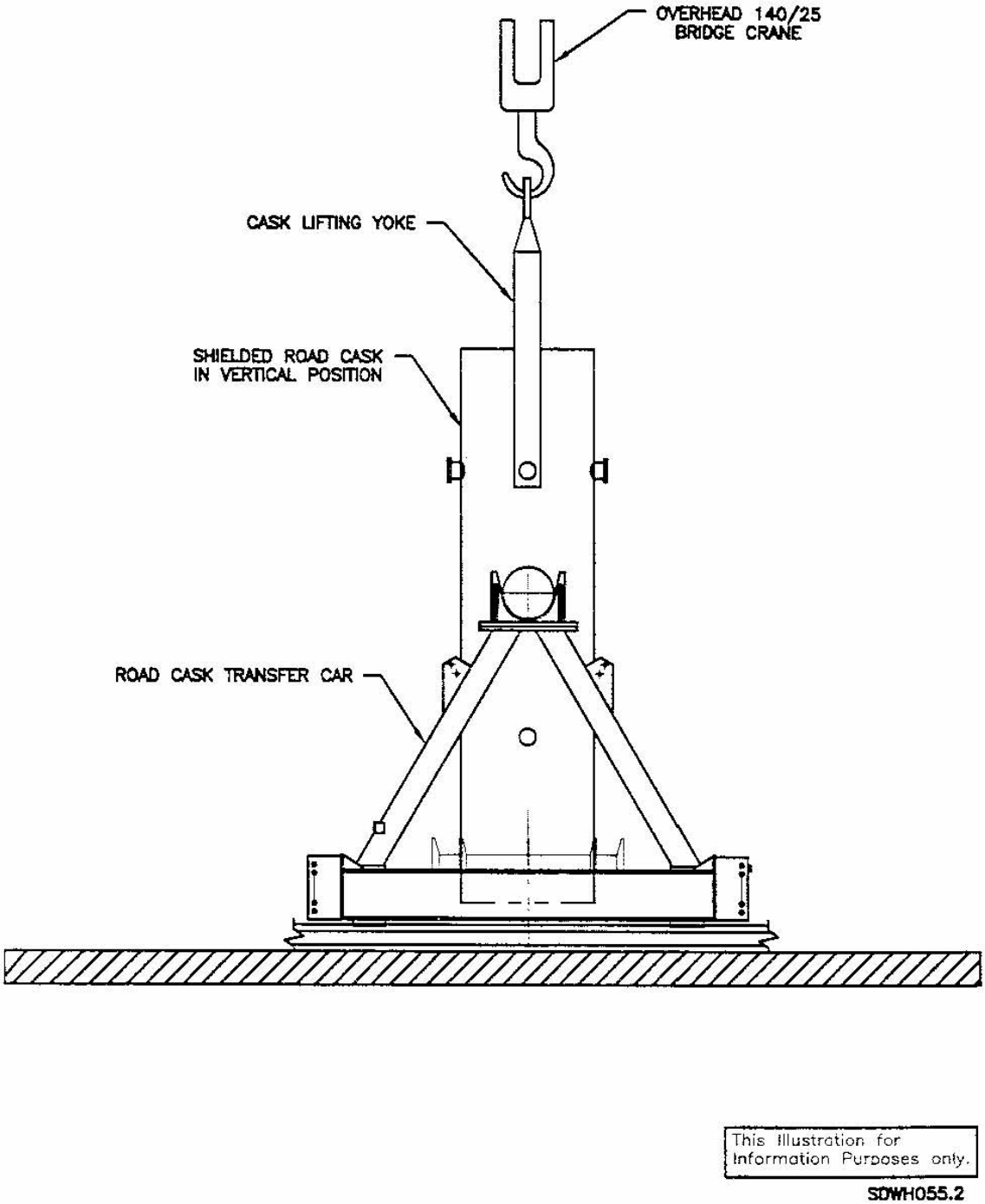

Figure 4.2-6 140-Ton Crane Cask Lifting Yoke In Use

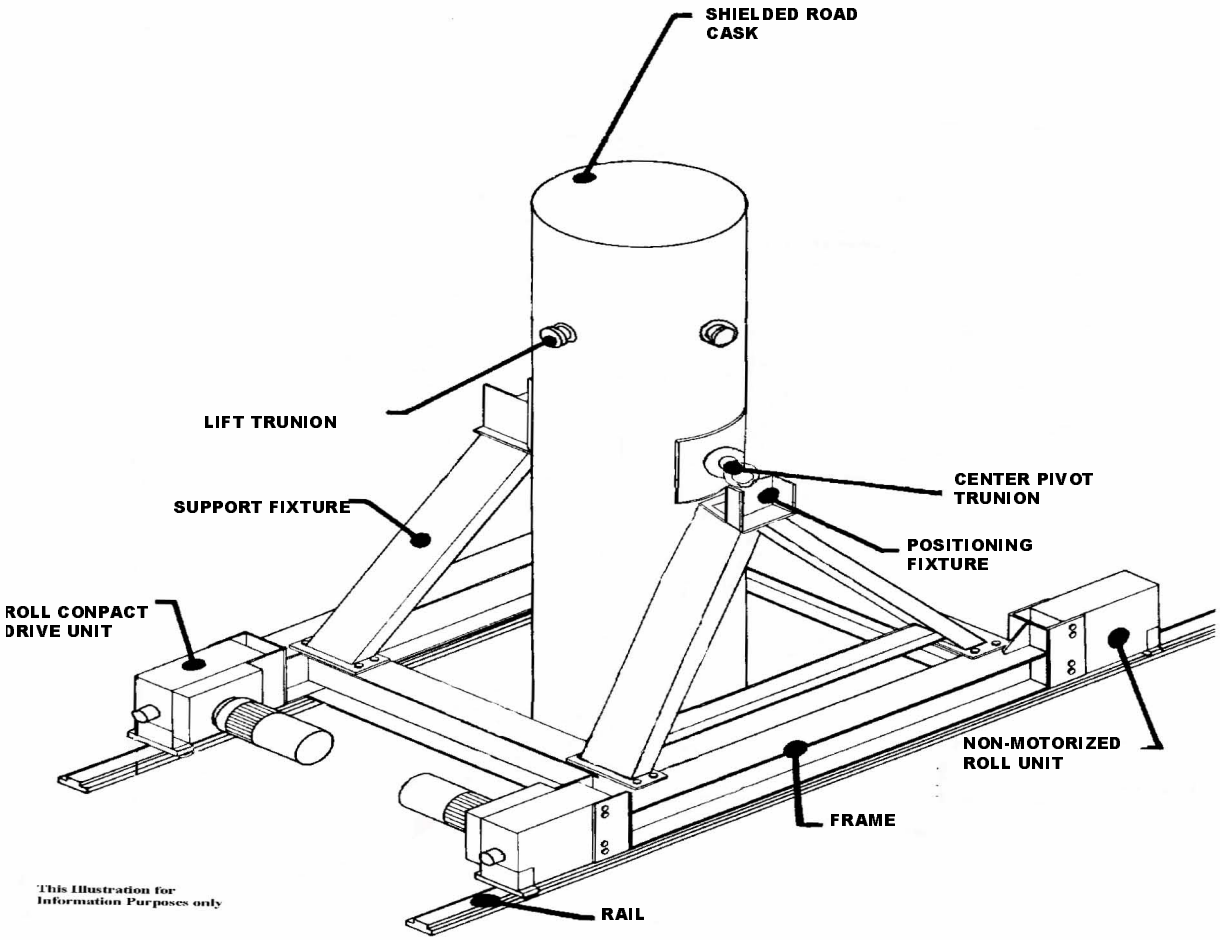

Figure 4.2-7 72B Road Cask on Transfer Car

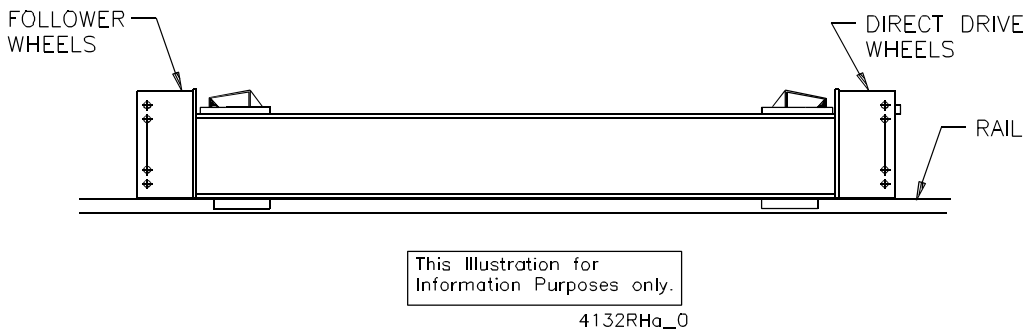

Figure 4.2-8 10-160B Transfer Car

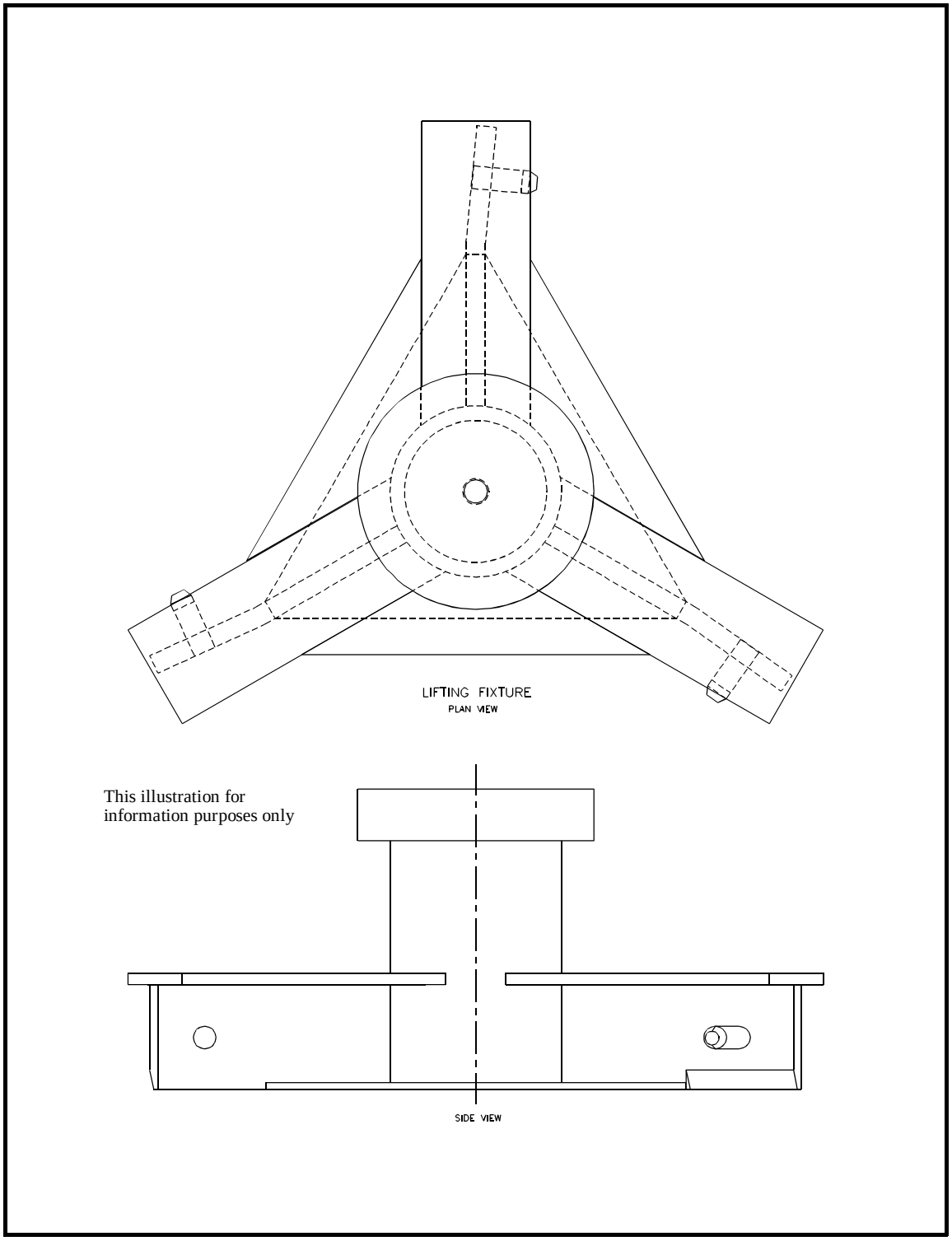

Figure 4.2-9 10-160B Cask Lid Lifting Fixture

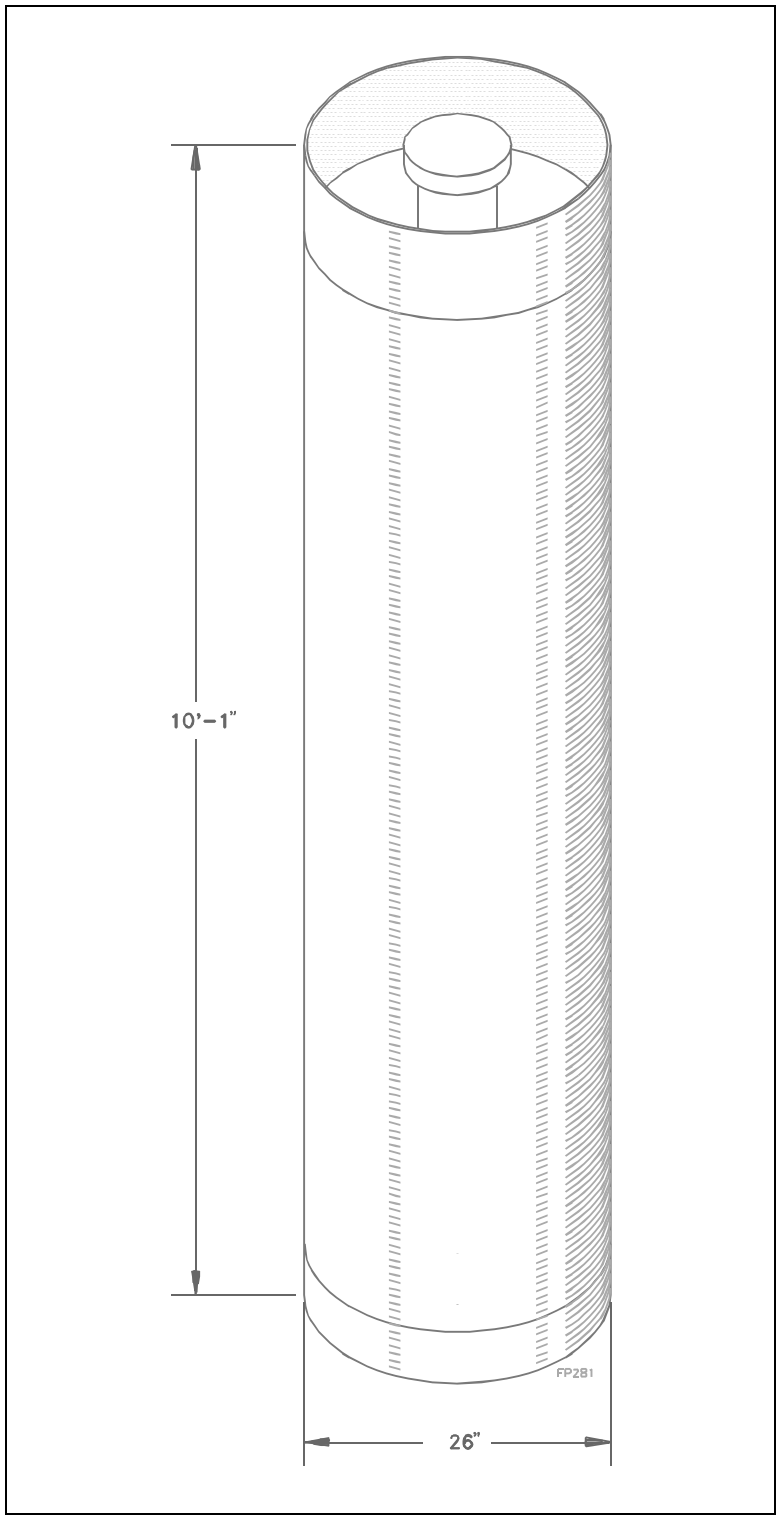

Figure 4.2-10 RH TRU Canister Assembly

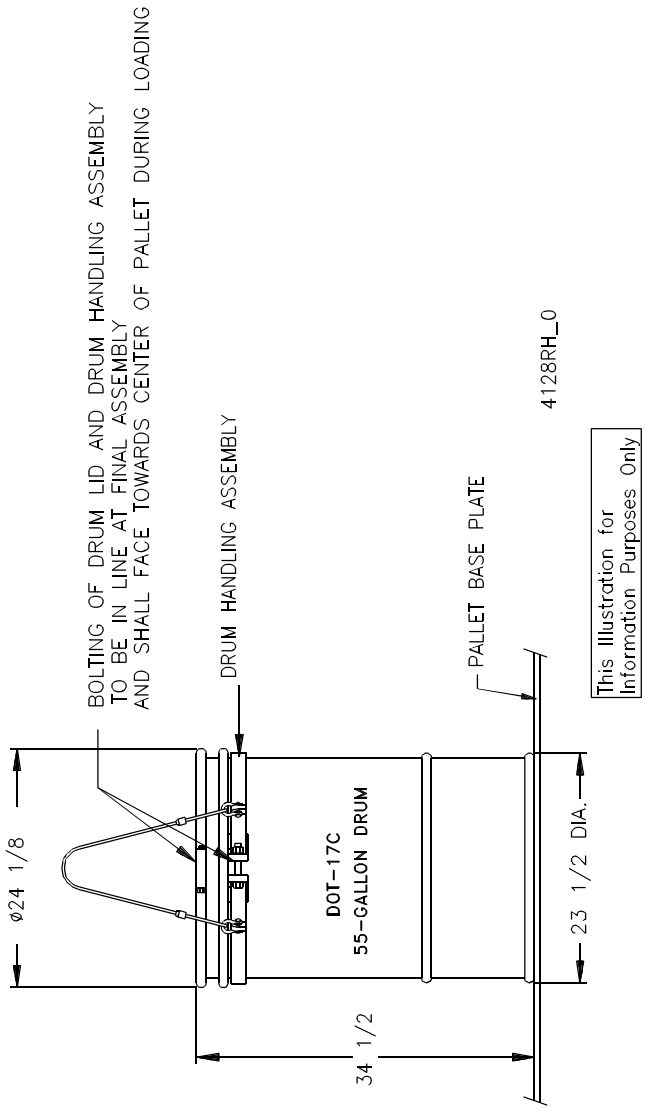

Figure 4.2-11 10-160 B 55-Gallon Drum Lift Device

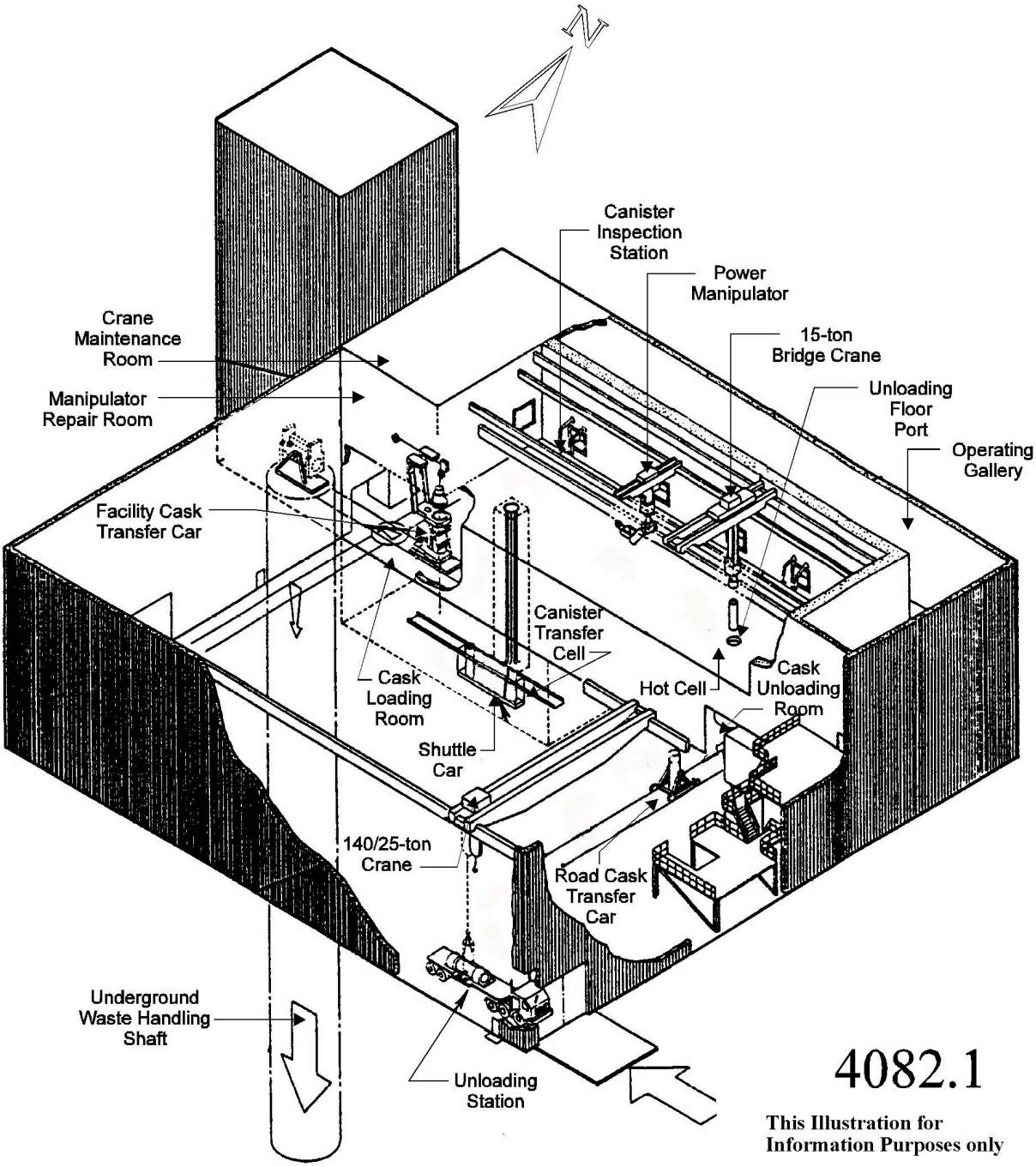

Figure 4.2-12 Pictorial View of the RH TRU Surface Facilities

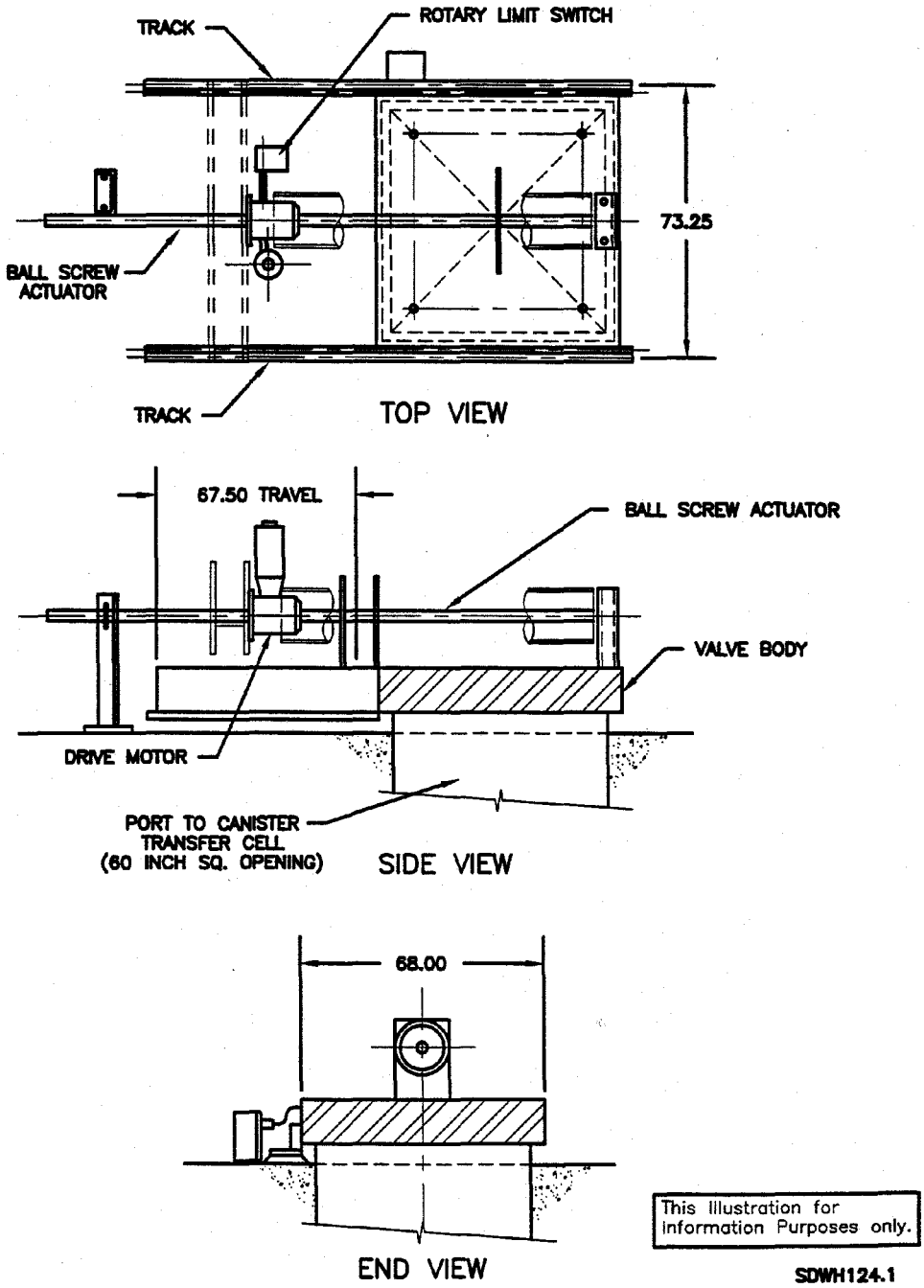

Figure 4.2-13 Shield Valve

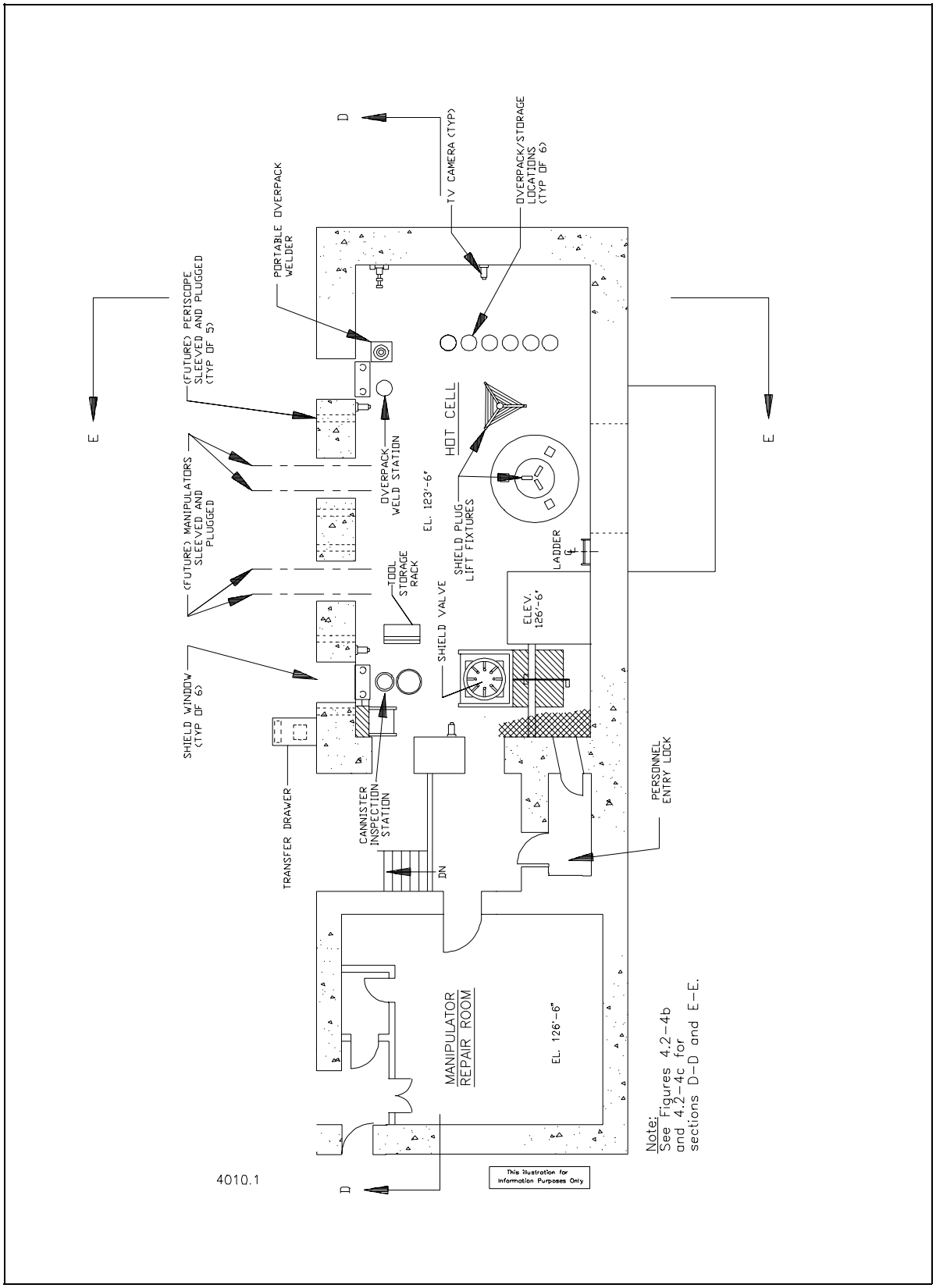

Figure 4.2-14a Details of Hot Cell

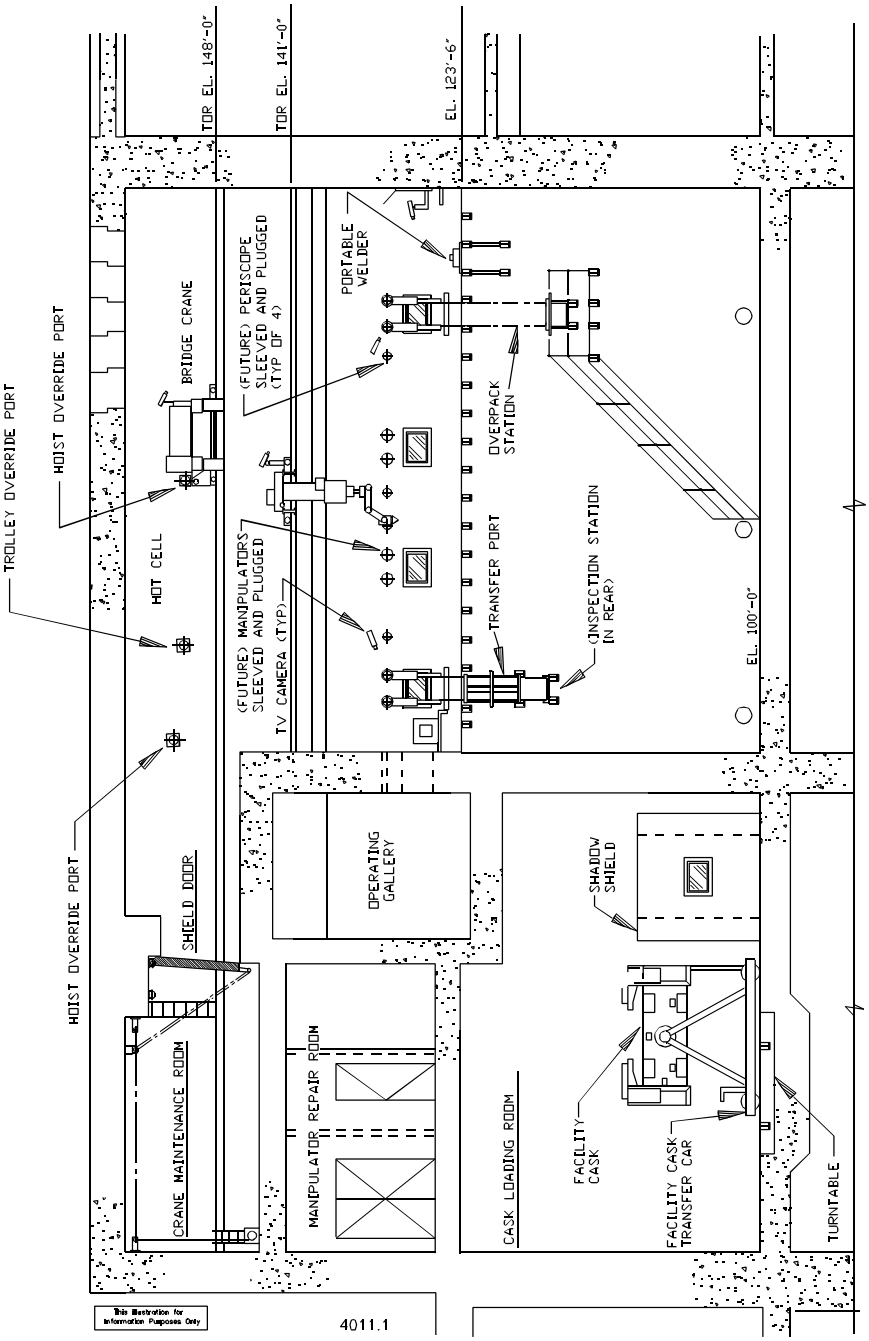

Figure 4.2-14b Details of Hot Cell Cross Section at D-D

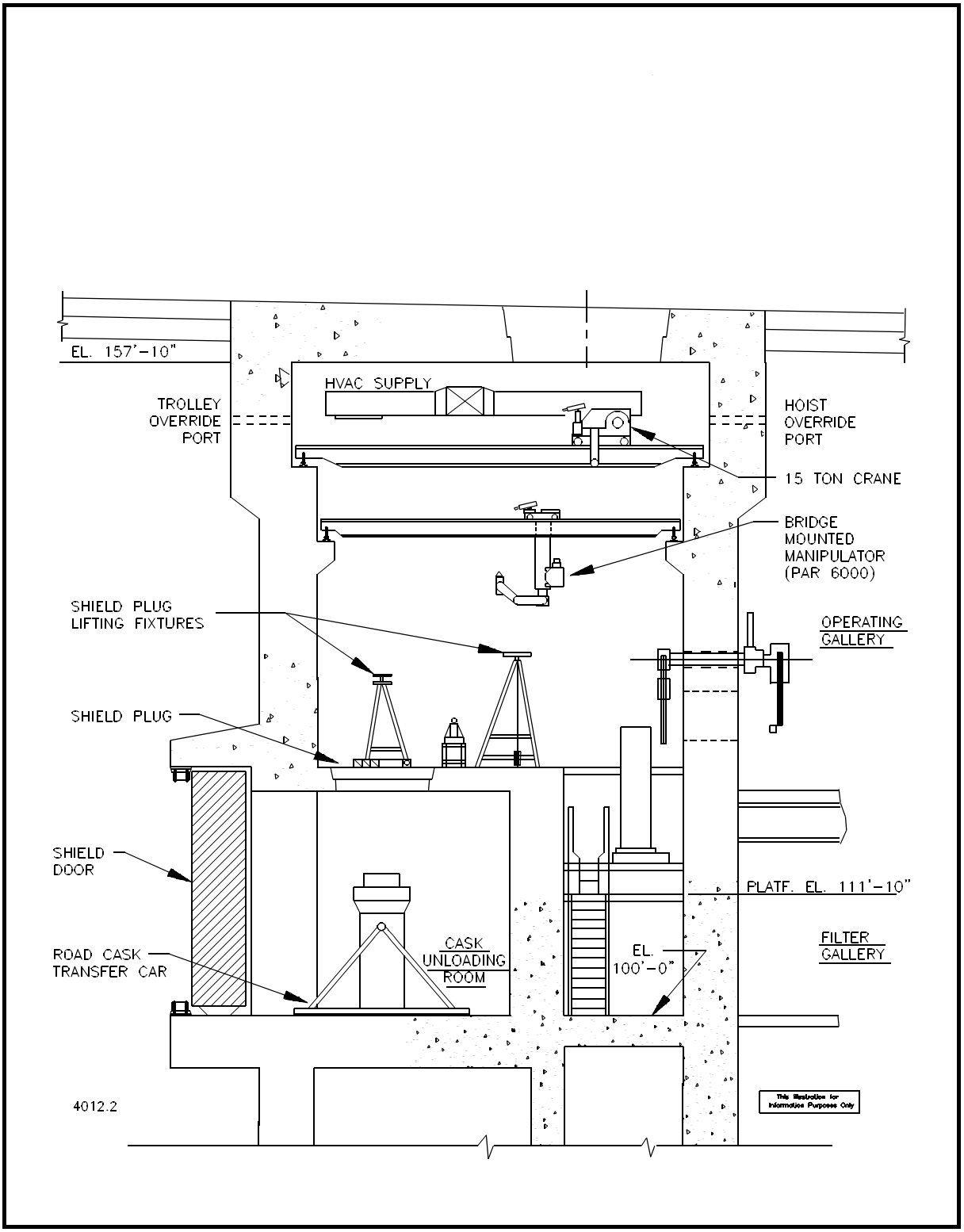

Figure 4.2-14c Details of Hot Cell at Cross Section E-E

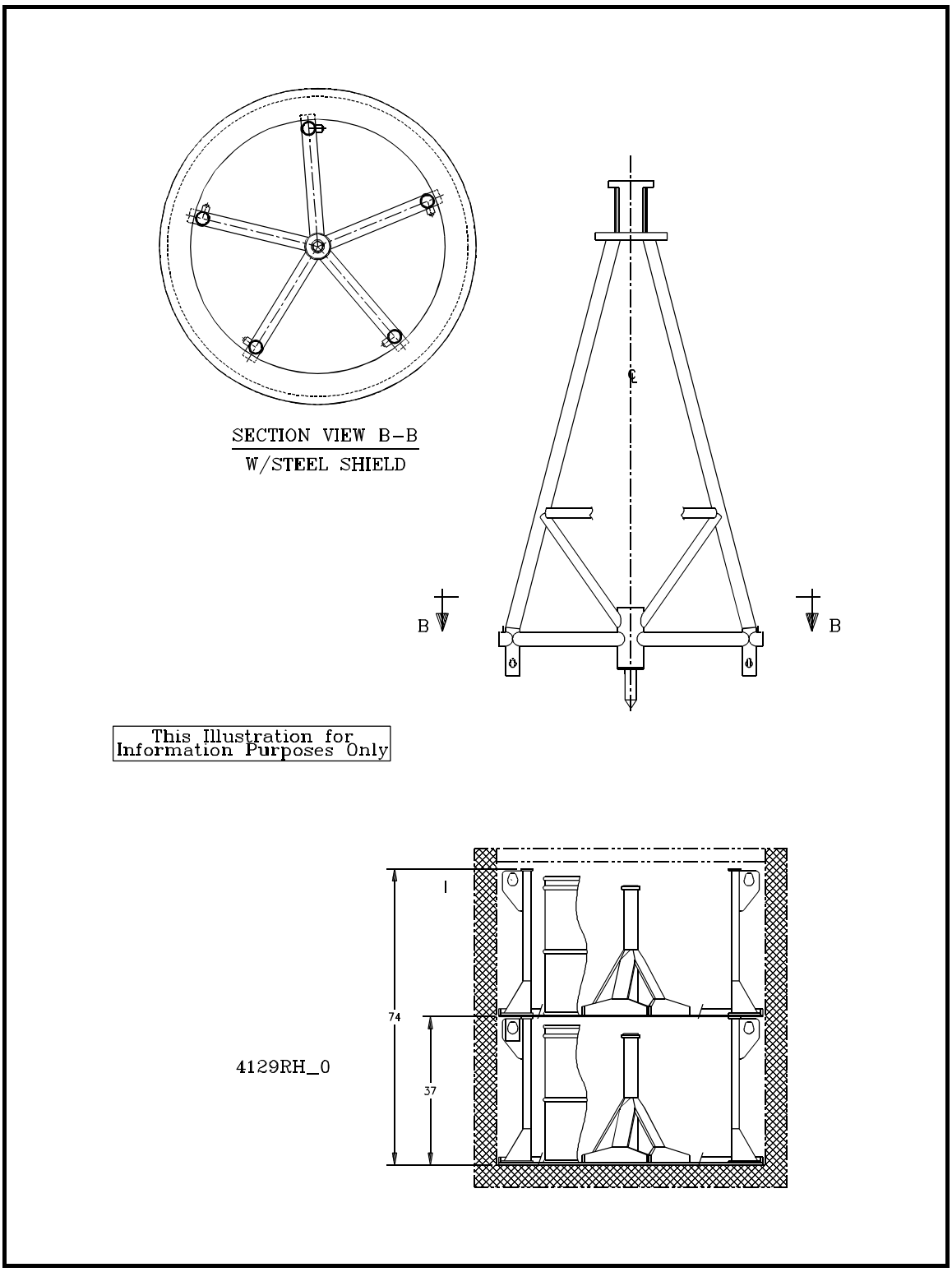

Figure 4.2-15a Drum Carriage Lift Fixture

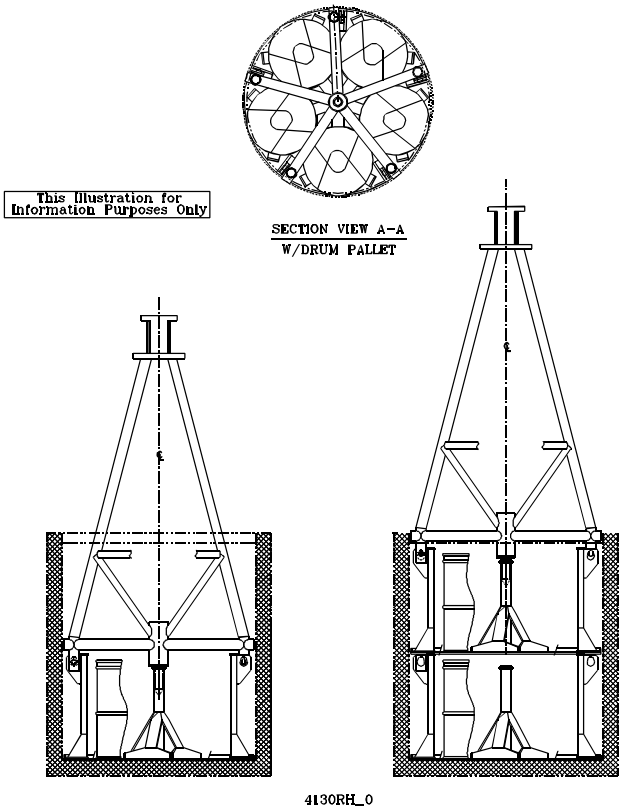

Figure 4.2-15b Drum Carriage Lift Fixture and Carriages

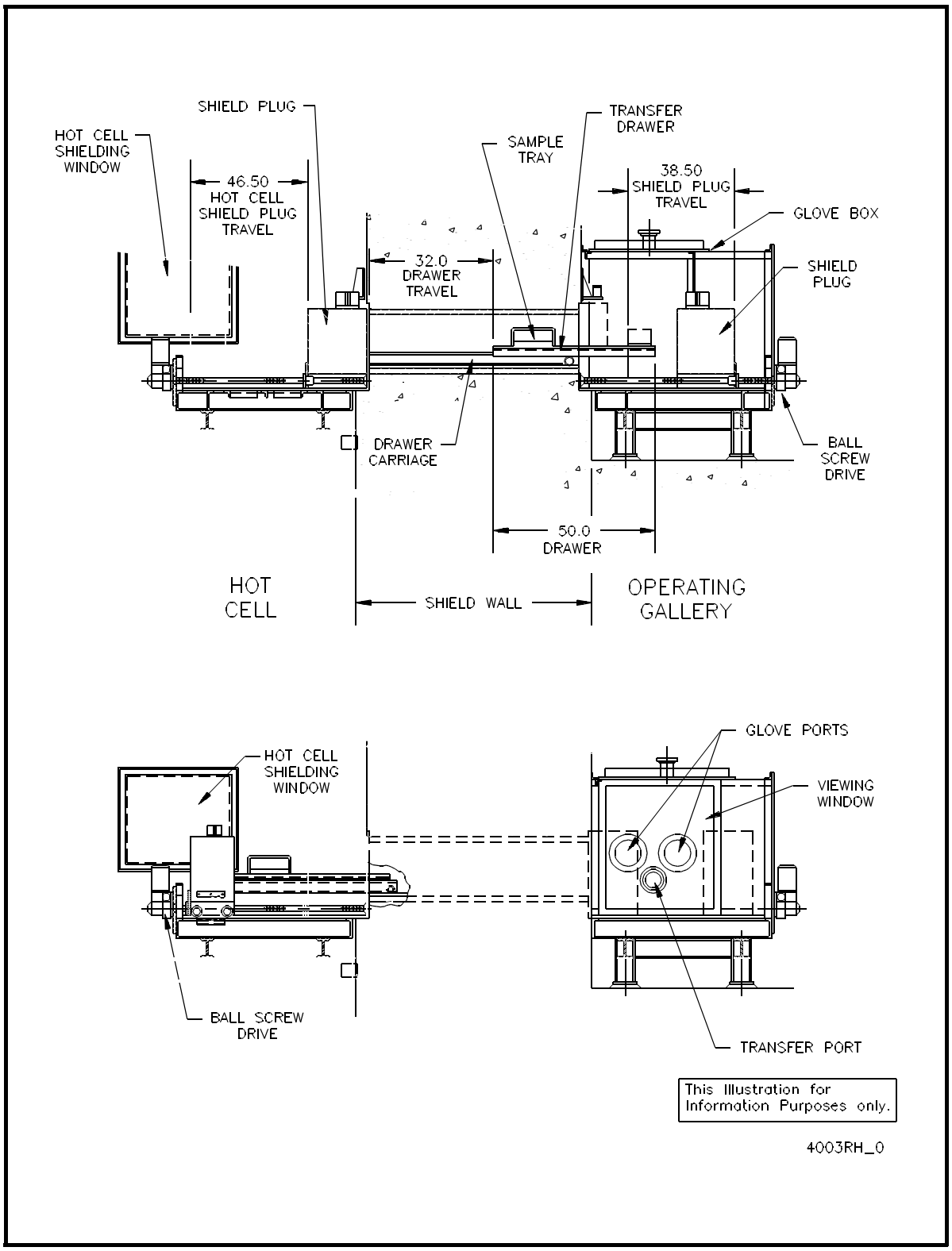

Figure 4.2-16 Shielded Transfer Drawer

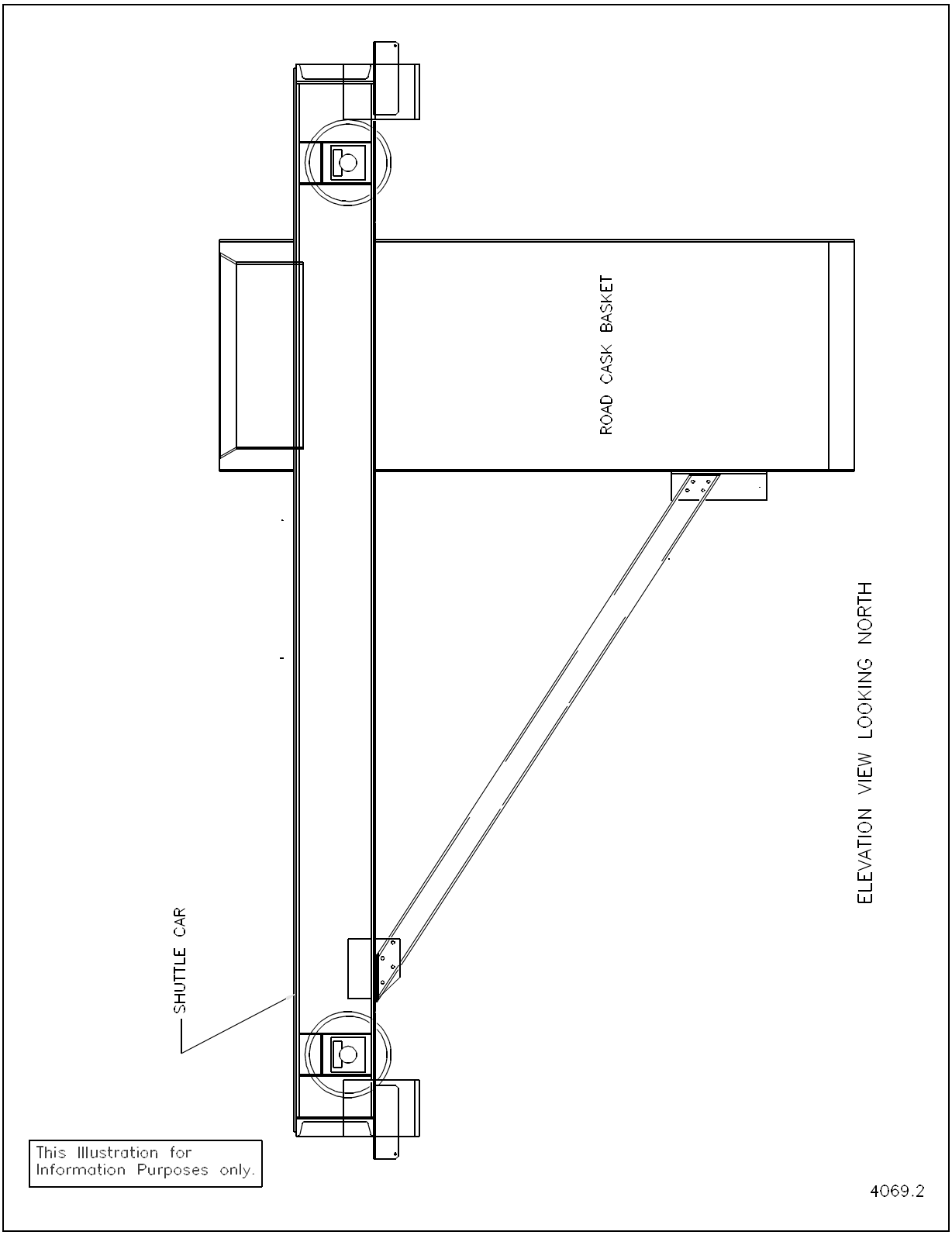

Figure 4.2-17 Transfer Cell Shuttle Car

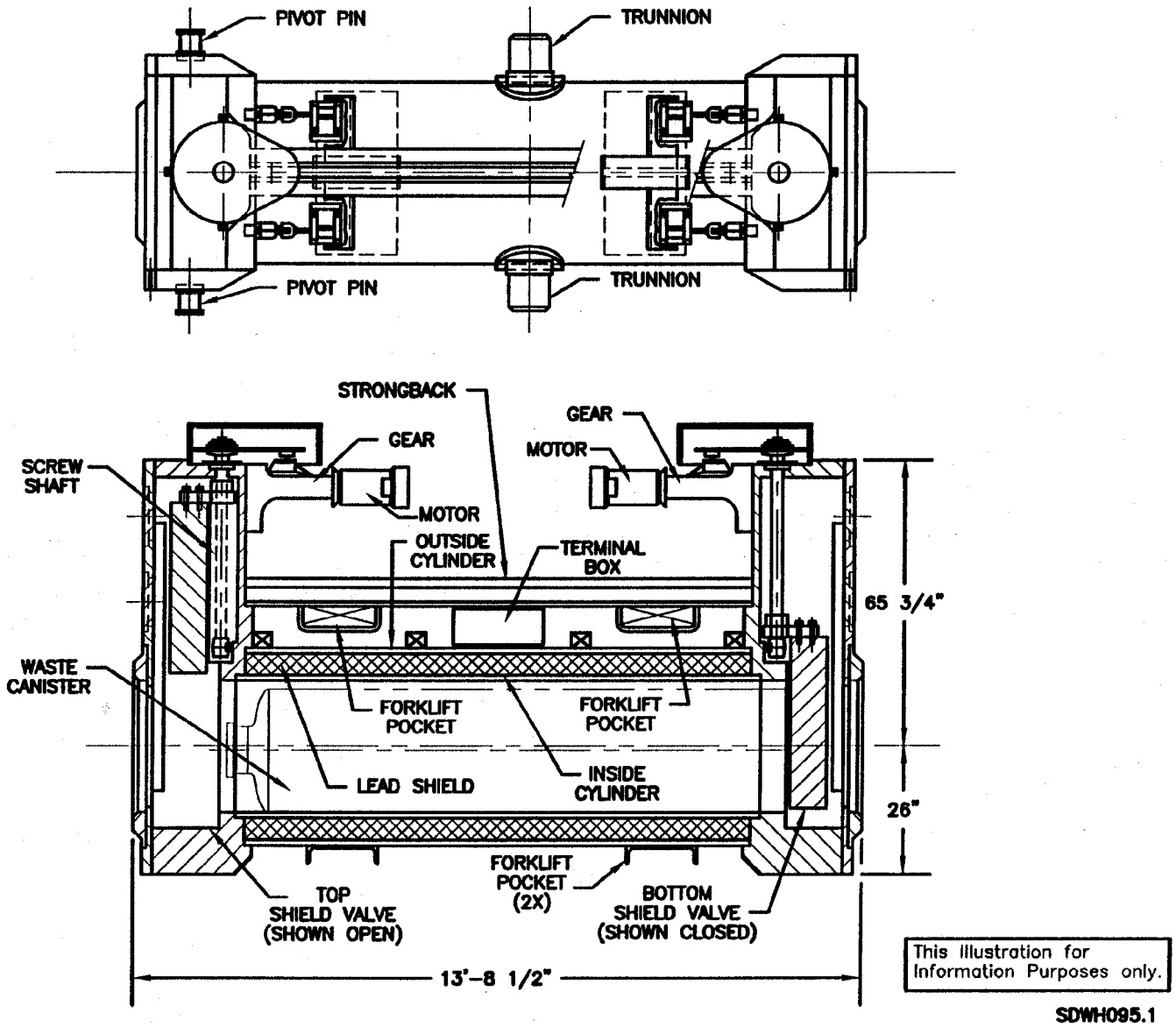

Figure 4.2-18 Facility Cask

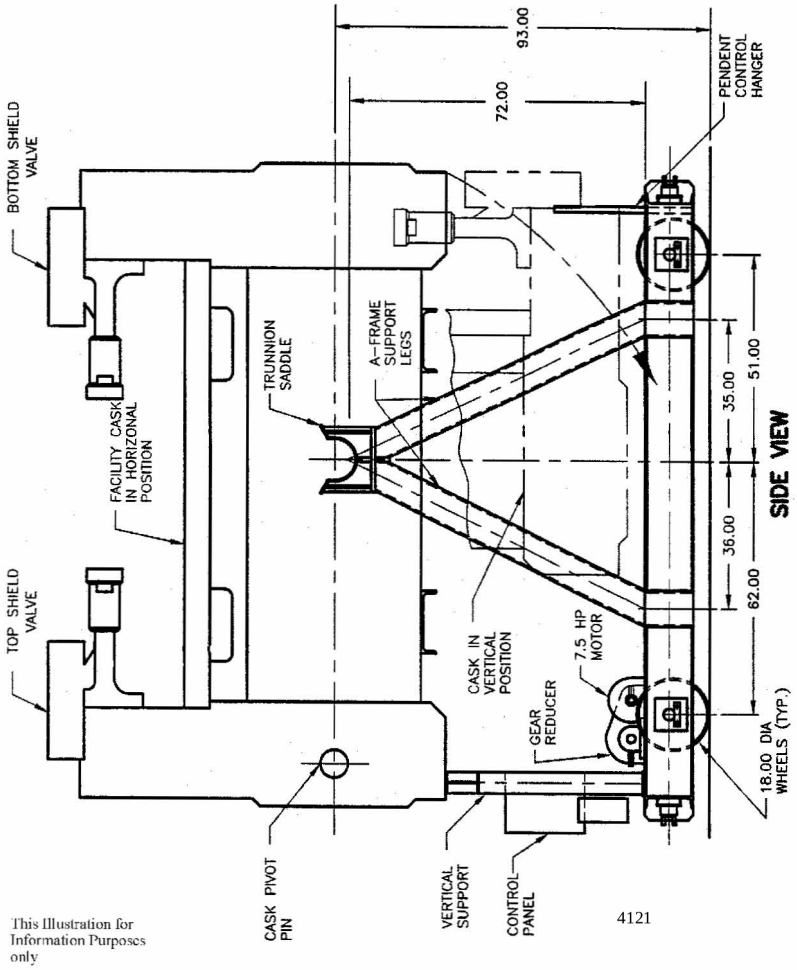

Figure 4.2-19 Facility Cask Transfer Car

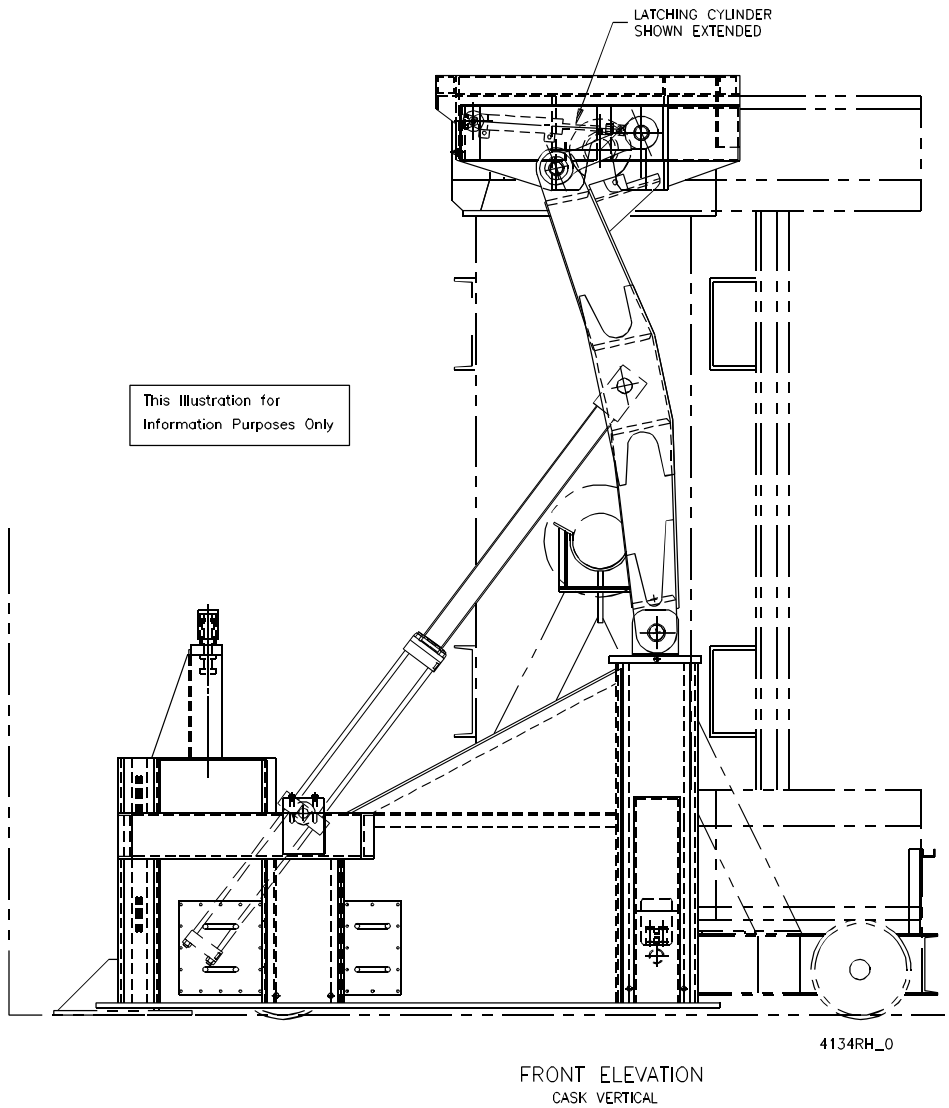

Figure 4.2-20 Facility Cask Rotating Device

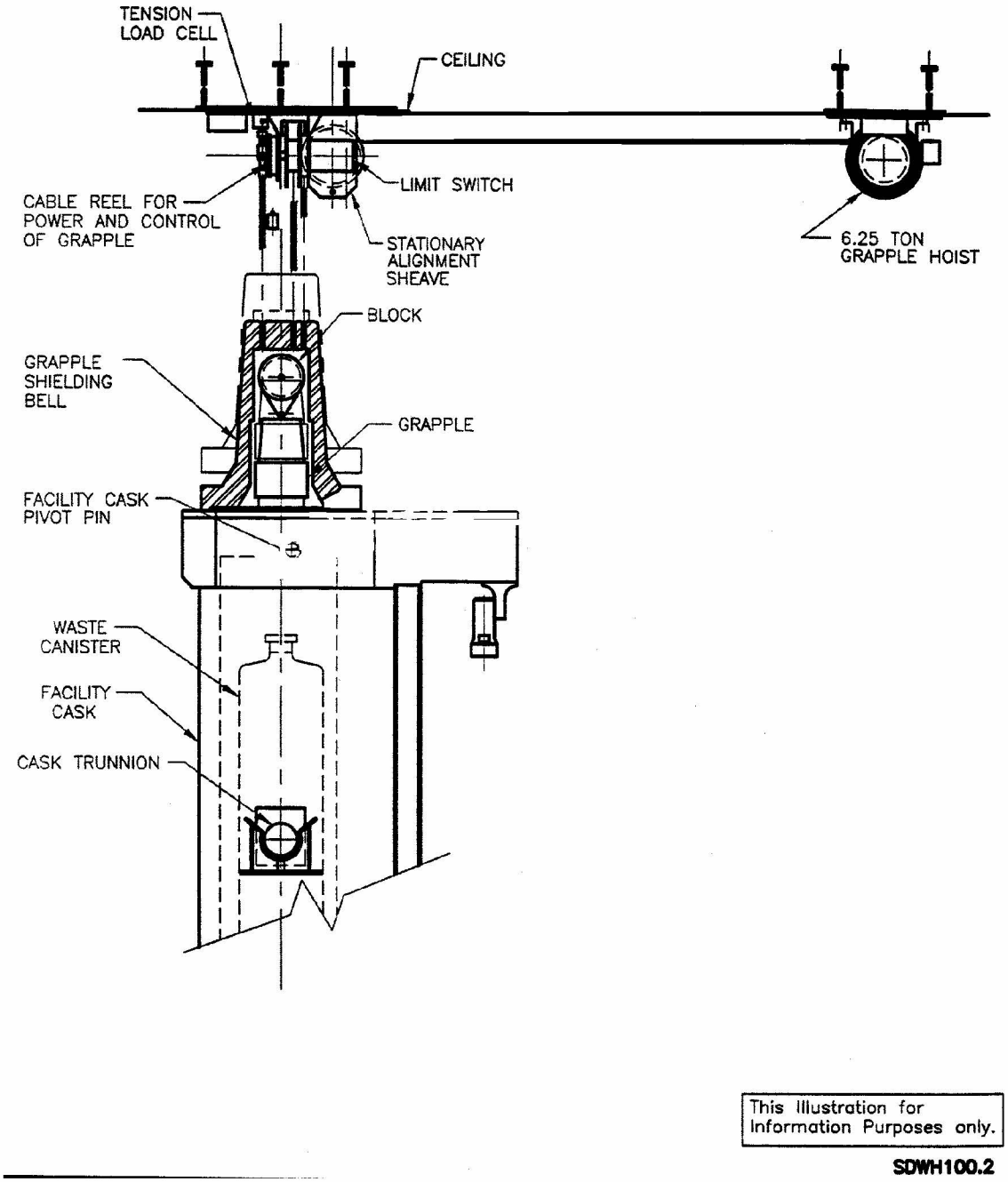

Figure 4.2-21 6.25-Ton Grapple Hoist

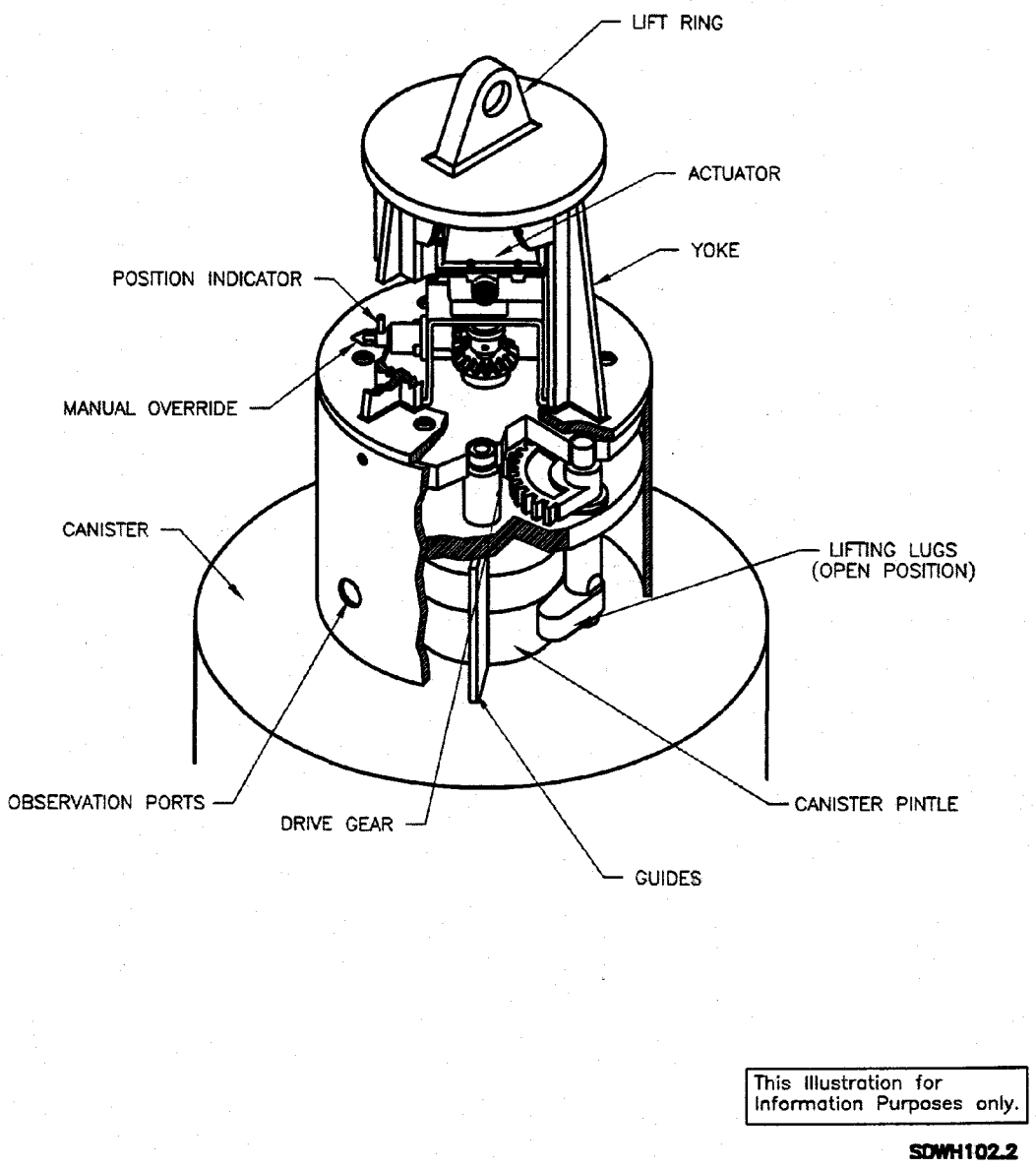

Figure 4.2-22 Facility Grapple

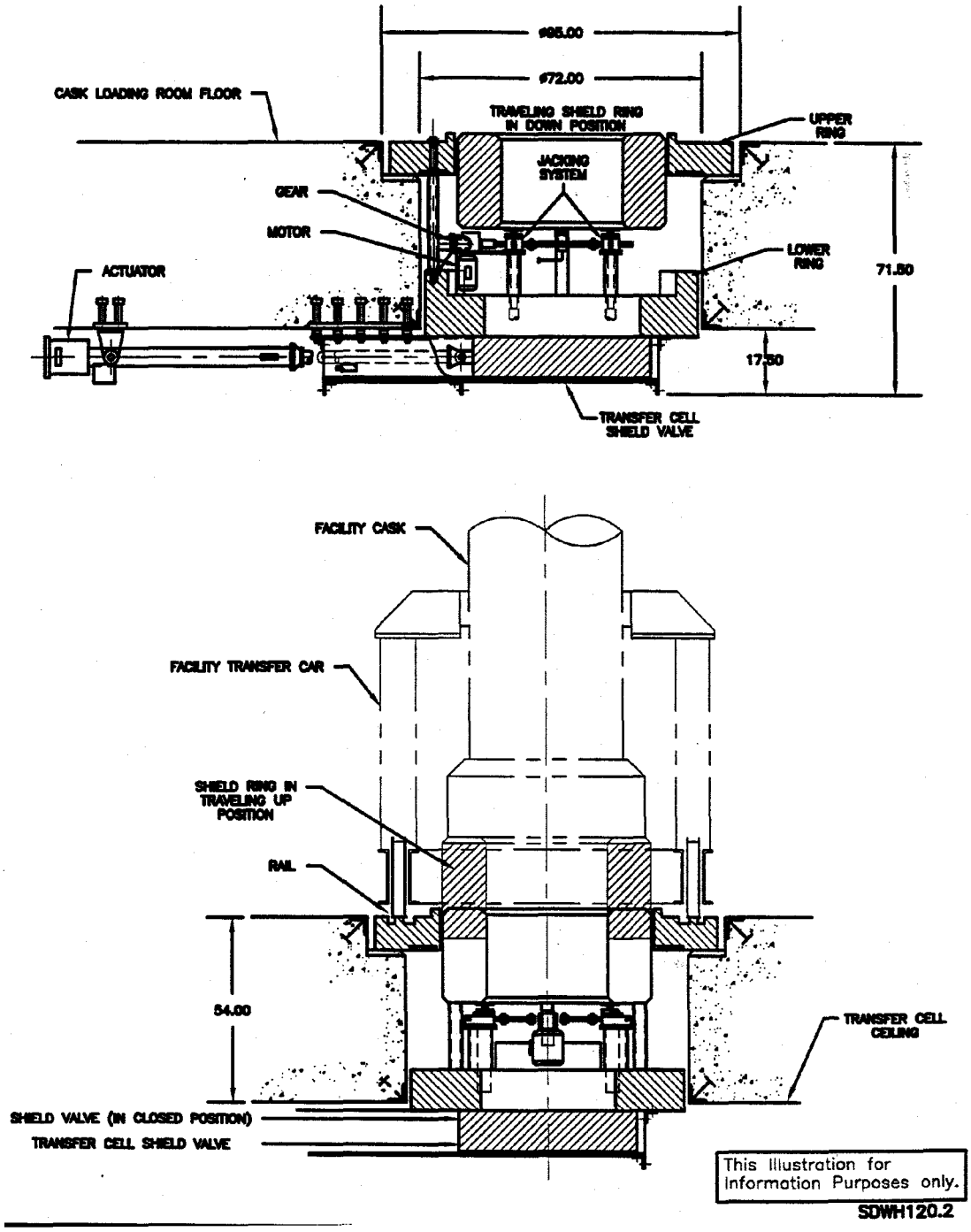

Figure 4.2-23 Telescoping Port Shield

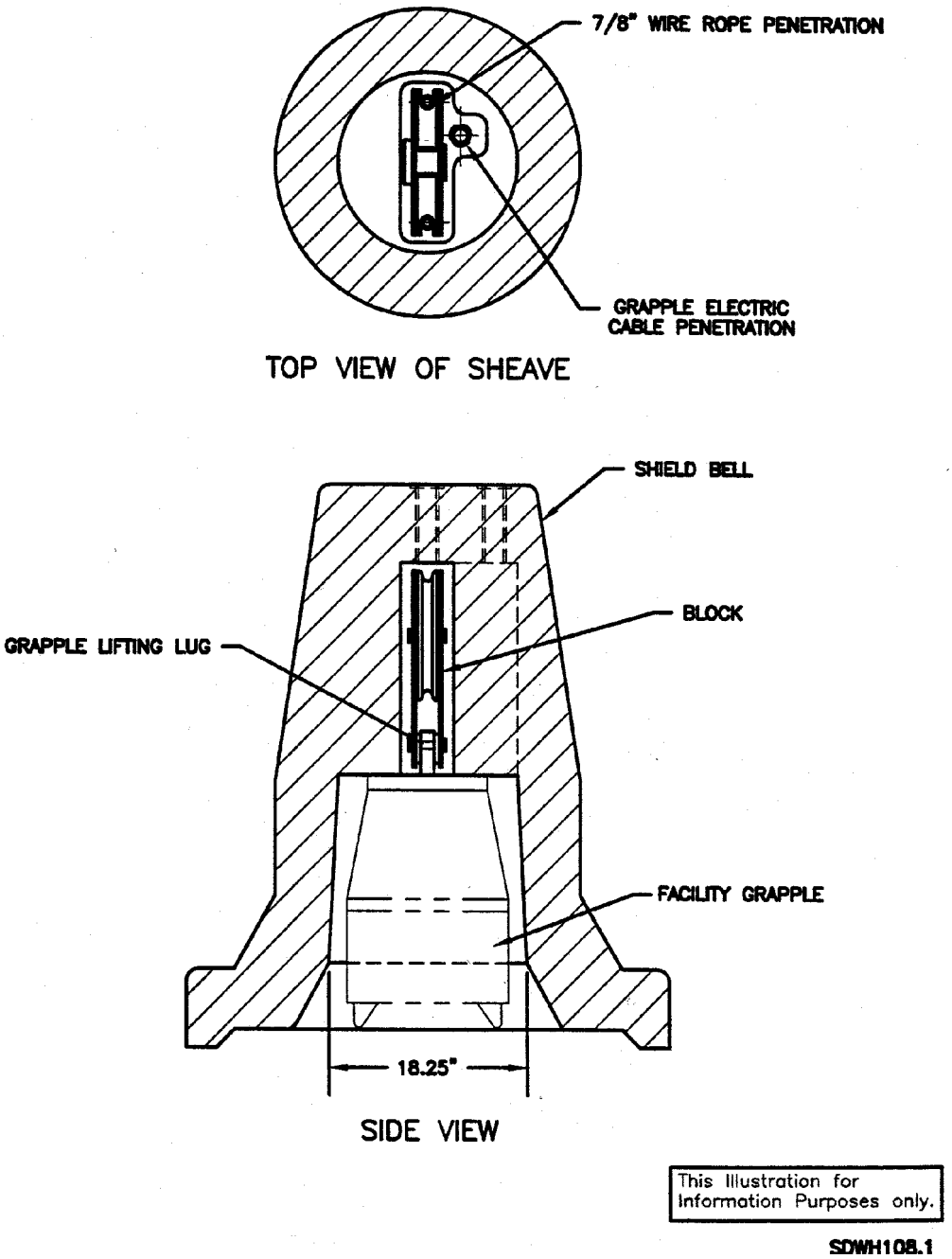

Figure 4.2-24 Bell Shield and Block

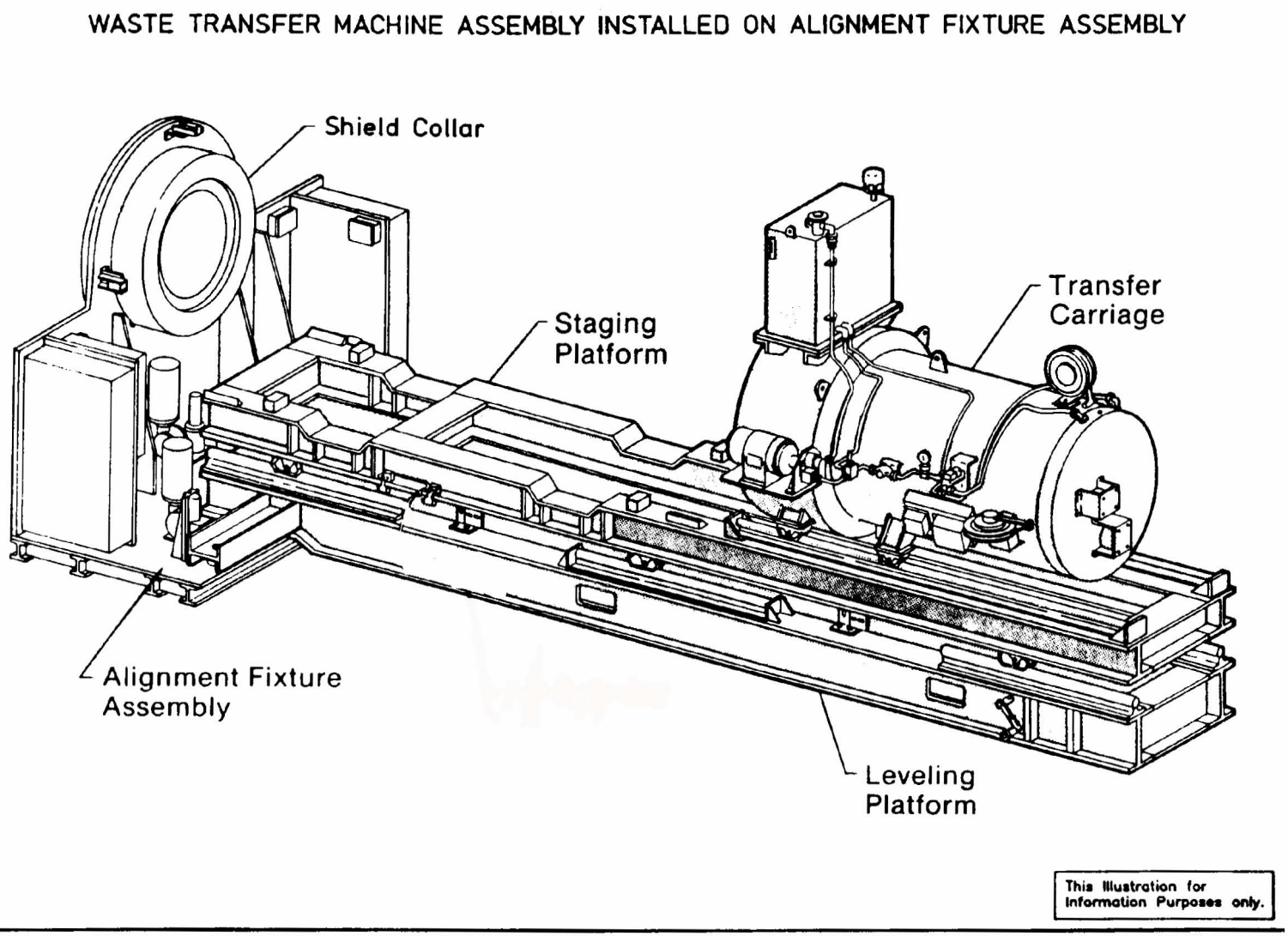

Figure 4.2-25 Waste Transfer Machine Assembly Installed on the Alignment Fixture

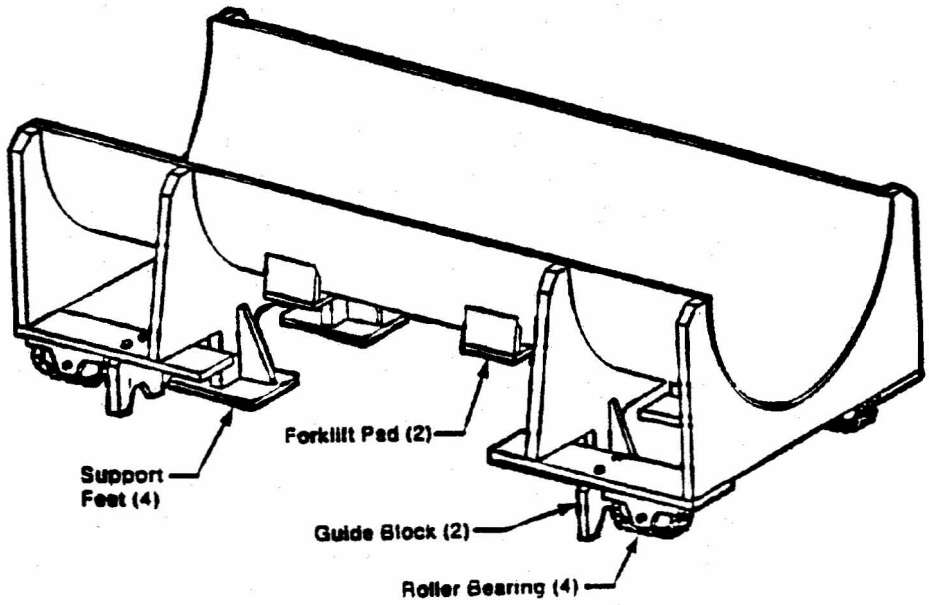

This illustration for Information Purposes only.

SDWH060.1

Figure 4.2-26 Shield Plug Carriage

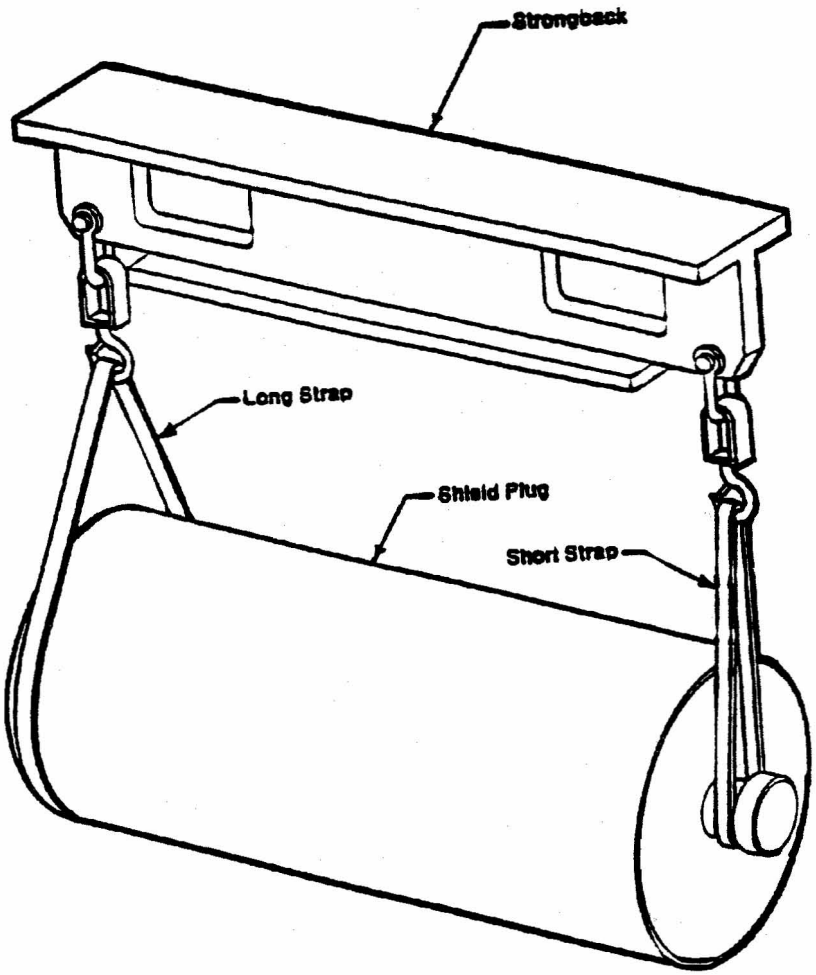

This Illustration for Information Purposes only.

SDWH061.1

Figure 4.2-27 Strongback

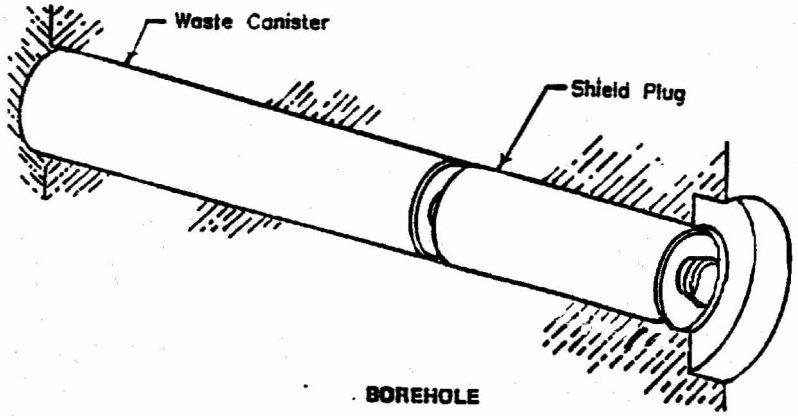

This Illustration for Information Purposes only.

SDWH072.1

Figure 4.2-28 RH Emplacement Configuration

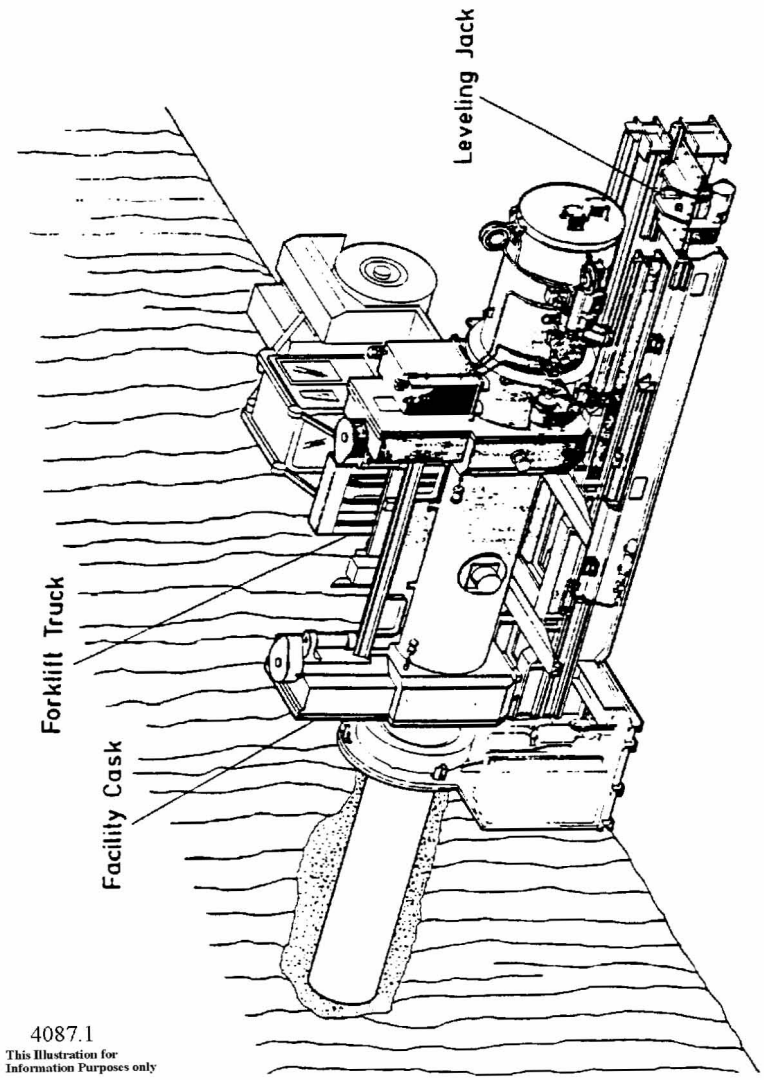

Figure 4.2-29 Facility Cask Installed on the Waste Transfer Machine Assembly

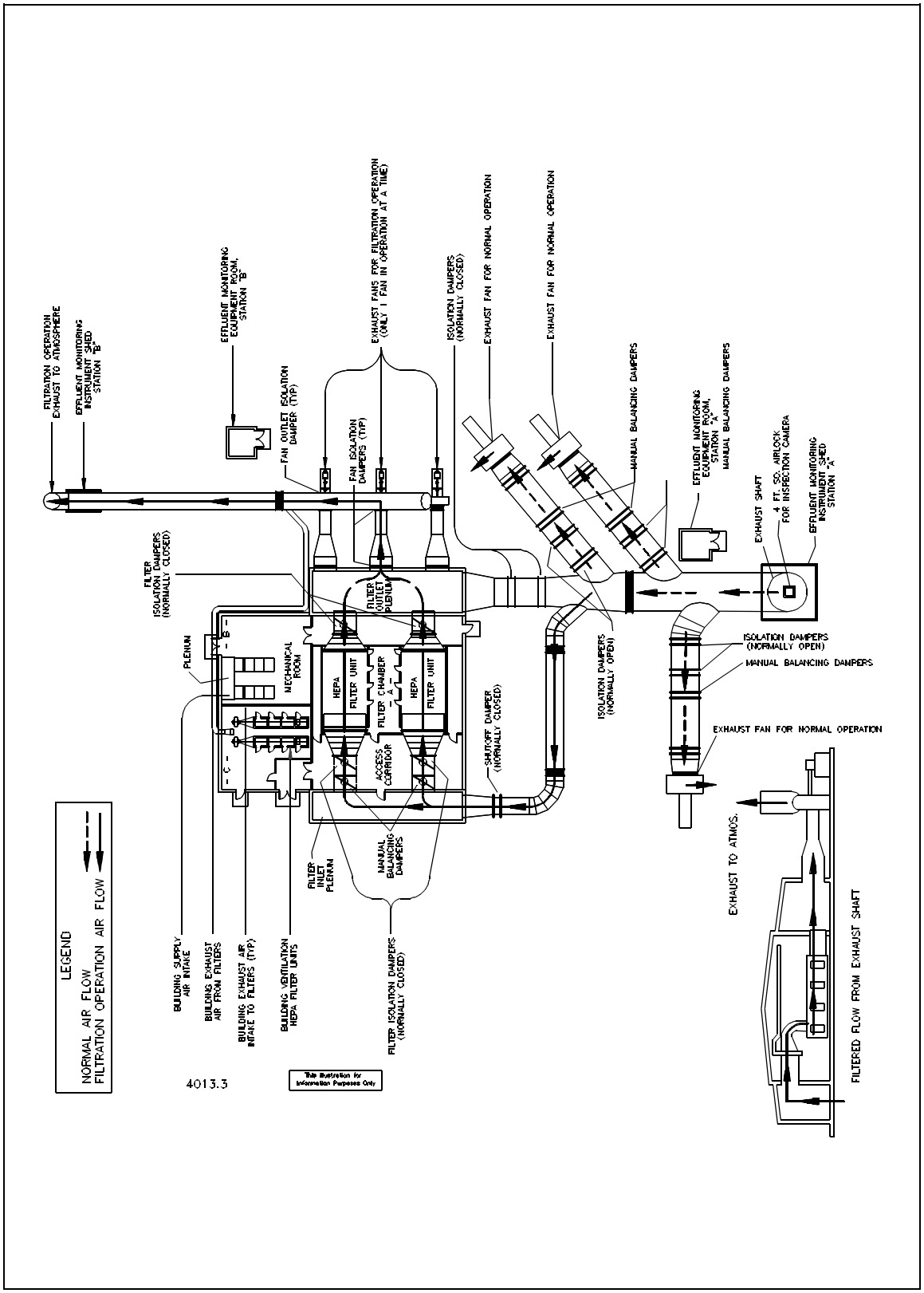

Figure 4.2-30 Exhaust Filter Building

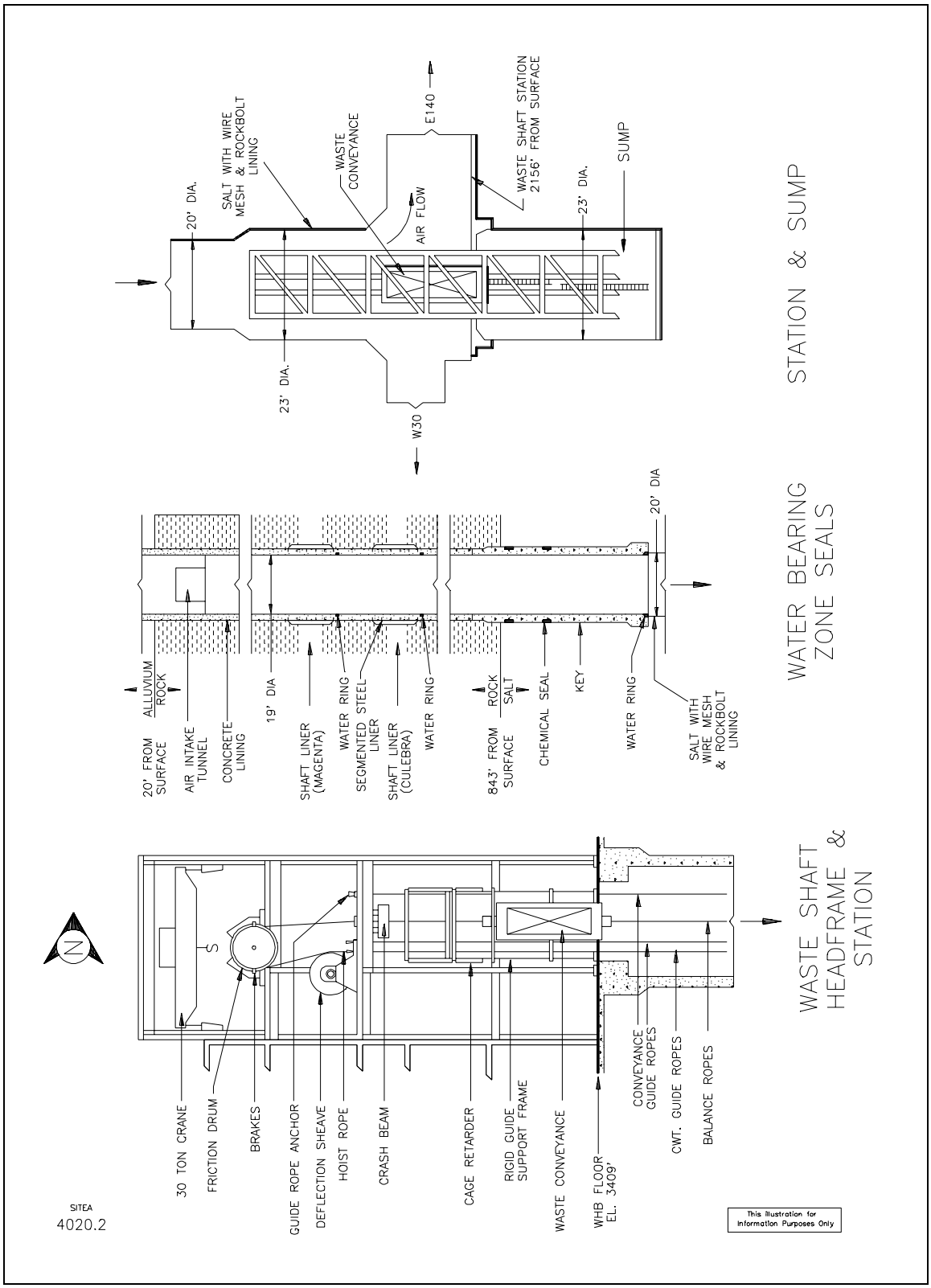

Figure 4.2-31 Waste Shaft and Hoist Arrangement

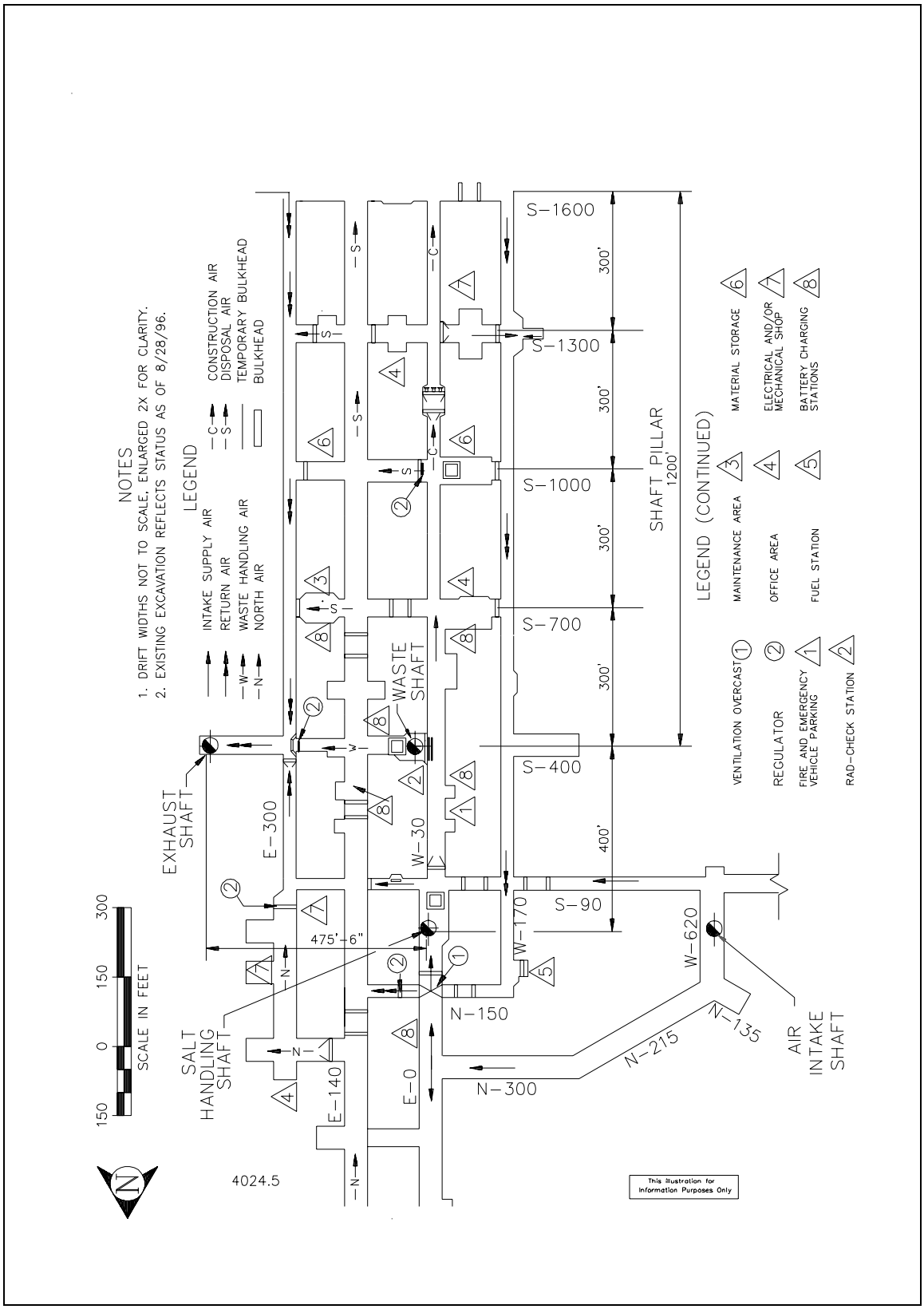

Figure 4.2-32 Shaft Pillar Area Layout and Ventilation Flows

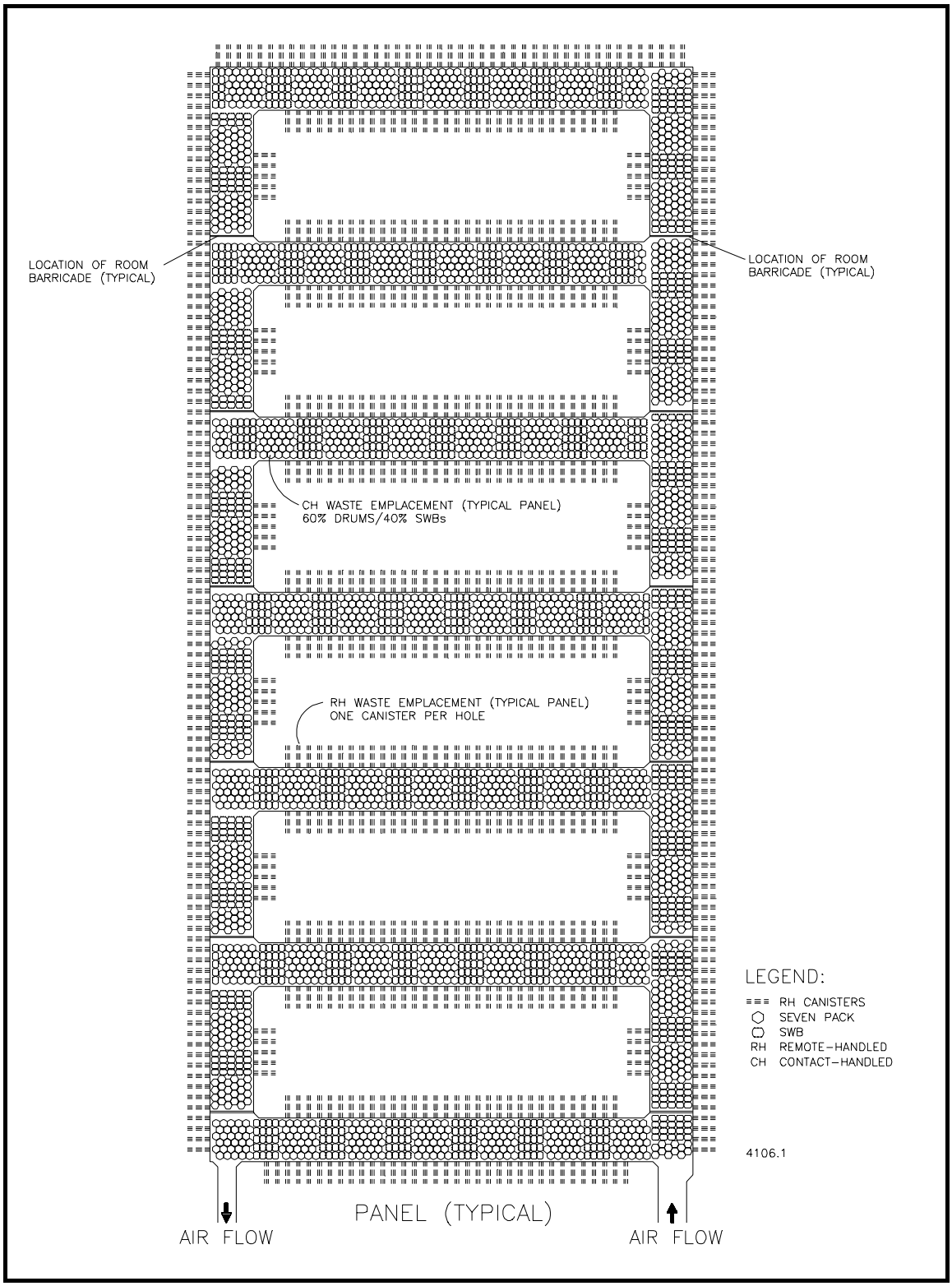

Figure 4.2-33 Typical RH and CH Transuranic Mixed Waste Disposal Configuration

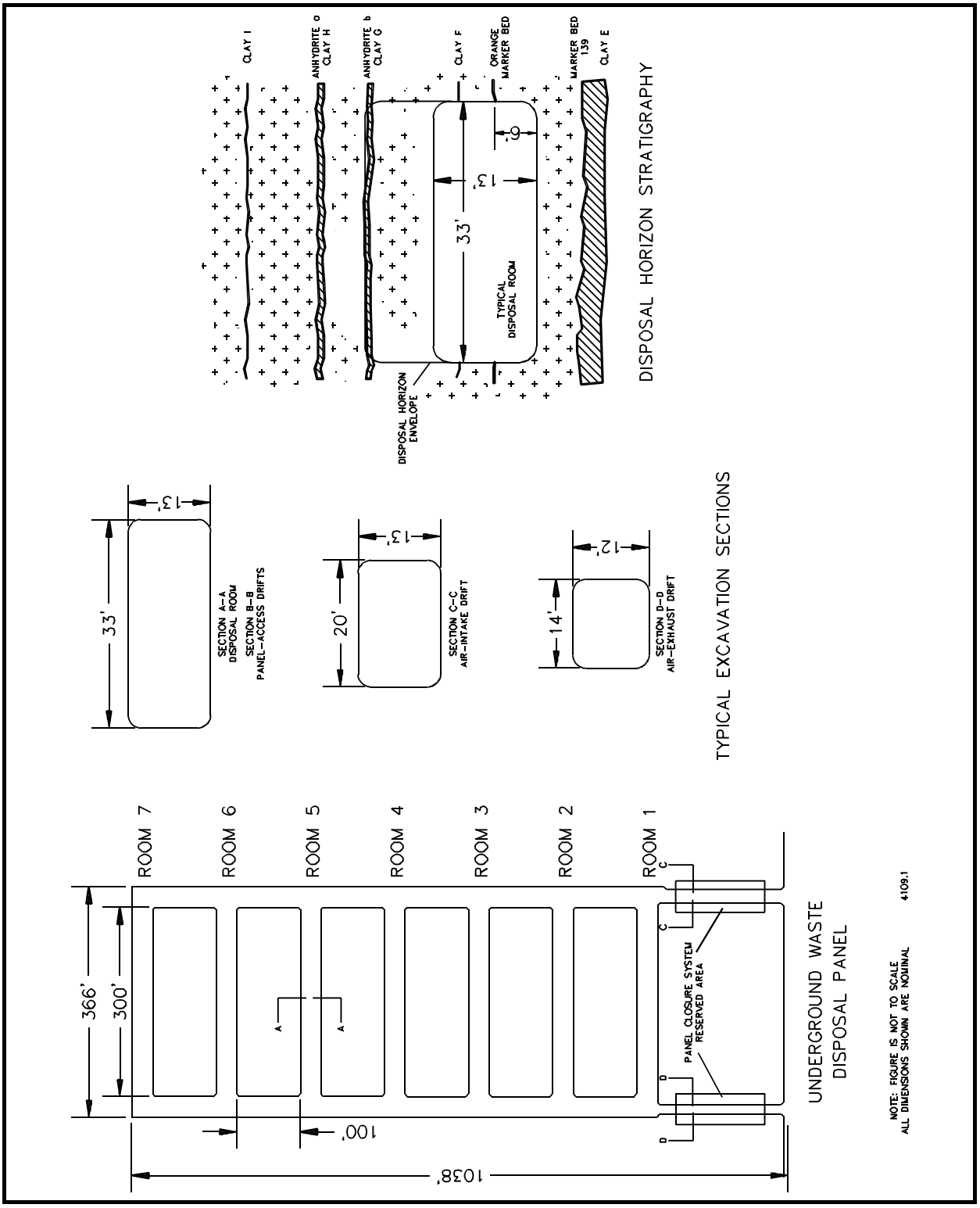

Figure 4.2-34 Typical Disposal Panel

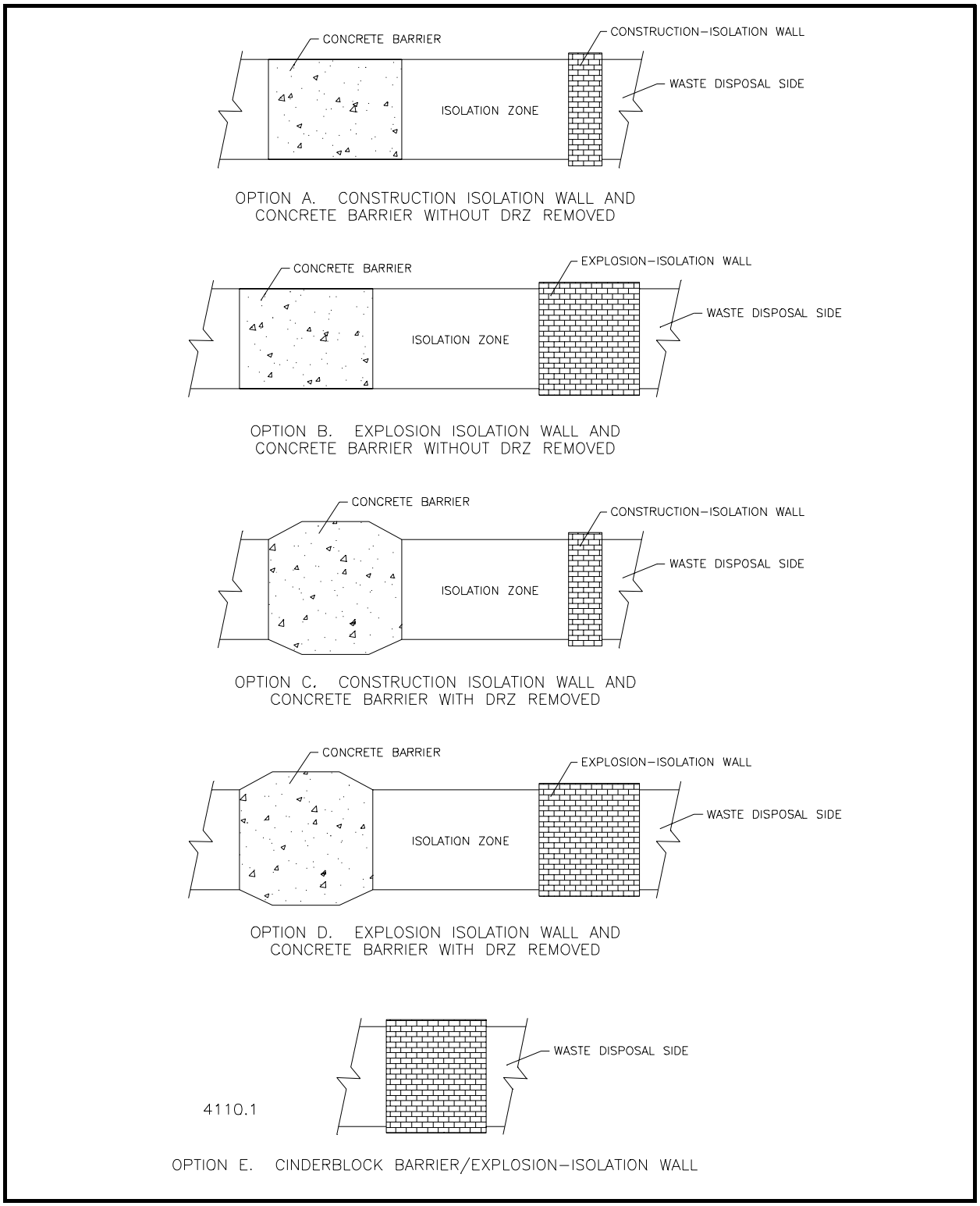

Figure 4.2-35 Design of a Panel Closure System

This page intentionally blank

4.3 Process Description

This section describes the RH TRU waste handling process at the WIPP facility. The process begins at the gate of the WIPP facility where RH TRU waste will arrive by truck. Rail shipments are not addressed at this time since they are not a current shipping mode. Description of the transportation system is beyond the scope of the RH PSAR.

This section addresses WIPP facility operation relative to design bases (e.g., 35-year operational life, design disposal capacity and throughput, etc). Process descriptions in this chapter are independent of the actual quantity of waste handled. The RH TRU waste handling system, including each function, the equipment used, and the operations performed, is discussed in this section. A pictorial view of the 72B RH TRU waste handling process is shown in Figure 4.3-1, while the 10-160B waste handling process is shown in Figure 4.3-2.

4.3.1 RH TRU Waste Receiving

Upon arrival, each incoming road cask shipment is inspected; which includes verifying the shipment documentation, performing a security check, and conducting an initial exterior radiological survey of the shipment. If any levels of radiation, contamination, or significant damage in excess of acceptance criteria are found, actions will be taken in accordance with approved procedures.

Following turnover of the shipping documentation, the driver transports and parks the trailer, unhooks the tractor in the parking lot adjacent to the RH waste entrance to the Waste Handling Building (WHB). The driver is subsequently released. The RH TRU waste outdoor storage area is designed to provide parking for RH TRU waste trailers. Only two loaded road casks are allowed in the RH bay at a time.

4.3.2 72B Cask Waste Handling Process

4.3.2.1 Cask Preparation

When space becomes available, a trailer with a loaded 72B road cask (Figure 4.3-3) is attached to a facility tractor and brought into the RH Bay by operations personnel. After the trailer is spotted inside the RH bay, Operators, using a motorized man lift as a work platform, remove the two impact limiters from the road cask while still on the trailer. The 140/25-ton overhead crane is used to lift the impact limiters and place on separate support stands. The cask lifting yoke is connected to the 140/25-ton overhead bridge crane. The lifting yoke engages the handling trunnions of the road cask. The road cask is lifted and rotated to the vertical position and placed on the road cask transfer car (Figure 4.2-7). The A-frame of the road cask transfer car supports the road cask at the transporter trunnions. The 72B road cask is then moved to the cask preparation station (elevated work platform) in the RH Bay. The work platform, which straddles the road cask transfer car rails, allows personnel to have access to the head area of the road cask for conducting radiological surveys, performing physical inspections or minor maintenance, and decontamination, if necessary.

The outer lid lift fixture is attached to the work platform 2.5-ton jib crane. After radiological surveys for surface contamination and radiation levels are performed, the space between the inner (IC) and outer (OC) lid is vented via the OC lid vent fixture. The operators then remove the OC lid bolts using the OC lid bolts detensioning device. The outer lid lift fixture is attached to the OC lid. The OC lid is lifted by the jib crane from the road cask and placed on its storage stand. The inner lid vent is opened to equalize the pressure between the road cask cavity and atmospheric, then the inner lid lift fixture (pintle) is attached to the inner lid.

4.3.2.2 Cask Unloading Room

The 72B road cask is moved from the cask preparation station into the CUR. The CUR 25-ton crane with a road cask lift fixture engages the two opposing lifting trunnions of the road cask. The 25-ton crane lifts the road cask from the road cask transfer car and positions it over the CUR shield valve. Interlocks require the 25-ton crane to be positioned over the floor shield valve, the shuttle car cask receiver (Figure 4.2-17) in the Transfer Cell to be positioned under the floor shield valve, the Transfer Cell ceiling shield valve to be closed, the Hot Cell shield valve to be closed, and the Hot Cell floor shield plugs installed before the CUR floor shield valve can be opened. When all interlocks are satisfied, the floor shield valve is opened. The process is reversed when a 72B road cask is removed from the Transfer Cell.

Differential air pressure flow from the CUR to the Transfer Cell is used to protect the workers and prevent the spread of contamination in the case of an off normal event.

4.3.2.3 Transfer Cell

The Transfer Cell is an exclusion area when a canister of RH TRU waste is present, and any reentry after RH TRU waste handling requires a radiological survey of the cell area.

The loaded 72B cask is lowered through the open CUR shield valve port into the Transfer Cell, then into the shuttle car road cask receiver. The height of the cask receiver and the size of the shuttle car prevents any road cask movement once it is inside the receiver. The road cask lift fixture is disengaged from the lifting trunnions (closed circuit TV cameras and load cells on the lift fixture are used to verify lift fixture disengagement). The 25-ton crane lift fixture is lifted back inside the CUR. When the open port of the floor shield valve is clear, the floor shield valve is closed.

The transfer cell shuttle car is designed to transfer one 72B cask from below the CUR floor shield valve to the various robotic work stations in the Transfer Cell. Remote controlled CCTV cameras are used to monitor waste handling operations in the Transfer Cell.

The shuttle car positions the72B cask next to the robotic inner lid bolts detensioning device. The detensioning device loosens the lid retaining bolts, which are spring loaded so that they remain in the lid. The shuttle car then positions the 72B cask directly below the Transfer Cell shield valve.

4.3.2.4 Facility Cask Loading Room

In the Facility Cask Loading Room, the facility cask, on the facility cask transfer car, has been positioned so that when it is rotated to the vertical position by the facility cask rotating device, it is in alignment with the opening of the Transfer Cell ceiling shield valve and the telescoping port shield. The Facility Cask Loading Room shield door is closed.

When the facility cask has been rotated to the vertical position, the telescoping port shield, mounted in the floor of the Facility Cask Loading Room, is raised to mate with the facility cask bottom shield valve body. The Facility Cask Loading Room 6.25-ton grapple hoist is lowered so that the shield bell is in contact with the facility cask top shield valve body. With the shield bell and the telescoping port shield in contact with the facility cask, a totally shielded volume is formed to allow the safe transfer of a RH TRU waste canister from the 72B cask into the facility cask.

The top facility cask shield valve is opened, the Transfer Cell ceiling shield valve is opened, then the bottom facility cask shield valve is opened and the facility grapple, attached to the 6.25-ton grapple hoist, is lowered through the facility cask into the Transfer Cell. (Note: the Transfer Cell ceiling shield valve and both facility cask shield valves are interlocked so that the facility cask bottom shield cannot be opened unless the Transfer Cell ceiling shield valve is opened and the Transfer Cell ceiling shield valve cannot be closed unless the facility cask bottom shield valve is closed) The facility grapple engages the inner lid pintle, installed at the cask preparation station, and lifts the inner lid clear of the 72B cask. When the lid is clear of the cask, radiological contamination swipes are taken by robotic means and are transferred from the Transfer Cell for analysis. The lid is lifted so that the Transfer Cell ceiling shield valve can be closed. The shuttle car is then repositioned so that the inner lid storage platform is aligned under the Transfer Cell ceiling shield valve. The Transfer Cell ceiling shield valve is opened and the facility grapple positions the inner lid on its storage platform and releases the pintle. The facility grapple is lifted so that the Transfer Cell ceiling shield valve can be closed. The shuttle car then positioned so that the 72B cask is in alignment with the Transfer Cell Shield valve and the shield valve is opened. The facility grapple is lowered until it engages the pintle of the waste canister.

As the waste canister is lifted from the 72B cask and before it passes through the Transfer Cell ceiling shield valve, radiological contamination swipes on the waste canister are taken by robotic means and are transferred from the Transfer Cell for analysis. Also the waste canister identification is observed by CCTV cameras and compared against the identity listed on the hazardous waste manifest and the WIPP Waste Information System (WWIS) to verify that the canister is suitable for emplacement. During the lift, the CCTV cameras provide a visual inspection to verify the mechanical integrity of the waste canister.

When the surveys have been satisfactorily completed and identification verified, the waste canister is lifted inside the facility cask. The bottom shield valve of the facility cask is closed, the Transfer Cell ceiling shield valve is closed, and the facility grapple lowers the waste canister so that it is resting on the gate of the bottom shield valve. the waste canister is held in position until the results of the contamination survey are completed. If the waste canister is cleared for disposal, the facility grapple disengages from the waste canister pintle and is lifted into the bell shield, then the facility cask top shield valve is closed. The bell shield is then lifted away from the facility cask and the telescoping port shield is lowered. The facility cask is rotated to the horizontal position. The Facility Cask Loading Room shield door is opened.

If any discrepancy in a waste canister's identity or surveys (radiological and integrity) is detected, the waste canister will be re-inserted inside the road cask and the inner lid placed on the road cask. The shuttle car will position the road cask under the Hot Cell transfer path opening in the ceiling of the Transfer Cell. Radiological surveys will be performed to determine if any streaming paths from the road cask inner lid exists. If determined to be radiologically safe, the inner lid bolts will be manually tensioned and the 72B road cask unloading process will be reversed.

4.3.3 10-160B Cask Waste Handling Process

4.3.3.1 Road Cask Preparation

A loaded 10-160B road cask is brought into the RH Bay. After the trailer is spotted inside the RH bay, Operators, using a motorized man lift as a work platform, remove the top impact limiter from the road cask while still on the trailer. The 140/25-ton overhead crane is used to lift the impact limiter and place at designated location. Operators install the lifting lugs on the sides of the road cask. The lid is left in place to provide shielding. The 140/25-ton bridge crane is used to lift the 10-160B cask from the trailer by engaging the lifting lugs and place it on the 10-160B road cask transfer car. Operators then vent the cask utilizing containment/filtration to contain any contamination which may have been released during transit. The venting rig/containment will be surveyed for surface contamination after the pressures have equalized. Operations then remove the road cask lid bolts.

After the 10-160B road cask has been placed on the transfer car, the lid lift fixture with an integral pintle is attached to the cask lid. The lid lift fixture is installed by using either the 140/25 ton crane or the cask preparation station jib crane.

4.3.3.2 Cask Unloading Room

The transfer car transports the 10-160B road cask to the CUR and positions it under the Hot Cell floor shield plugs. Waste Handling personnel leave the room and close the shield door. Interlocks require the CUR shield door and floor shield valve and the Hot Cell shield valve to be closed, before the Hot Cell shield plugs can be removed. When all interlocks are satisfied, the shield plugs are removed.

When a loaded facility canister is ready for processing out of the Hot Cell, a shielded insert (used to transport a facility canister in the Transfer Cell will be positioned inside the CUR using the 72B road cask transfer car. The 25-ton crane will be used to lower the shielded insert into the Transfer Cell shuttle car cask receiver.

4.3.3.3 Hot Cell

Re-packaging of the RH TRU waste drums shipped in the 10-160B cask occurs in the Hot Cell. The Hot Cell is an exclusion area when containers of RH TRU waste are present, and any reentry after RH TRU waste handling requires a radiological survey of the Hot Cell area. The Hot Cell equipment (15-ton bridge crane and its attachments, power manipulator and attachments, master-slave manipulators and CCTV system) are used for waste handling operations inside the Hot Cell.

Operators in the operating gallery use the Hot Cell 15-ton crane and the shield plug lift fixtures, while monitoring the CCTVs, to remove the Hot Cell floor shield plugs and set them aside in the Hot Cell. The crane with a facility grapple is lowered into the CUR and engages the lid lifting fixture pintle on the 10-160B cask lid. The cask lid is raised into the Hot Cell where radiological contamination surveys are performed on its inside surfaces before it is set aside. The facility grapple on the Hot Cell crane engages the pintle on the 10-160B drum carriage lift fixture and lowers it into the CUR where it engages the lifting elements of the upper drum carriage unit. The crane raises the drum carriage unit into the Hot Cell moves it to the inspection station. At the inspection station radiological contamination swipes on the drums and carriage are taken. The swipes are placed in the Hot Cell transfer drawer and transferred into the glove box in the operating gallery for radiological counting. While waiting for radiological counting results, the identification of each drum is verified and compared against the identity listed on the hazardous waste manifest and the WWIS. Once the ID of each of the five drums is verified and all

are determined to be free of contamination, the carriage is placed at the designated storage location on the Hot Cell floor. The process is repeated for the second drum carriage unit. If any discrepancy in a waste drum's identity or radiological survey is detected, both loaded carriages will be re-inserted into the 10-160B road cask and 10-160B road cask unloading process will be reversed. If any empty drum carriage units are in the Hot Cell, a maximum of two will be placed into the empty 10-160B cask. The crane picks up the 10-160B cask lid and lowers it into the CUR and places it on the empty 10 –160B cask. The Hot Cell floor shield plugs are re-installed.

Facility canister(s) are pre-staged in the inspection station of the Hot Cell. A facility grapple installed on the 15-ton crane is used to remove the lid of one of the canisters in the inspection station. The bridge mounted power manipulator or the 15-ton Hot Cell crane is used to lift a drum from the carriage and place it into an empty facility canister. This process is repeated two more times until the maximum load of three drums are in a facility canister. This canister loading process is repeated until all drums have been removed from the two carriages. Any partially filled facility canisters can be maintained in the Hot Cell until another 10-160B is unloaded.

The power manipulator or the 15-ton Hot Cell crane is used to install and secure the lid(s) to the filled facility canister(s). Any partially loaded facility canister may be stored in the Hot Cell until it can be fully loaded. The 15-ton Hot Cell crane grapple engages the pintle on a loaded facility canister lid and lifts it from its stagged location. The facility canister is positioned directly over the closed Hot Cell shield valve.

4.3.3.4 Transfer Cell

The Transfer Cell is an exclusion area when a canister of RH TRU waste is present, and any reentry after RH TRU waste handling requires a radiological survey of the Transfer Cell area.

The transfer cell shuttle car is designed to transfer one facility canister in a shielded insert at a time from below the Hot Cell shield valve to below the Transfer Cell ceiling shield valve. Remote controlled CCTV cameras are used to monitor waste handling operations in the Transfer Cell. The shuttle car with a shielded insert, similar to but sightly larger than a 72B road cask, is positioned so that the shielded insert is directly below the Hot Cell shield valve. The Hot Cell shield valve, which is interlocked with the Transfer Cell ceiling shield valve, the CUR floor shield valve, and the Hot Cell shield plugs in such a manner that it can only be opened when the shield plugs are installed and the Transfer Cell and CUR shield valves are closed. The facility canister is lowered through the open Hot Cell shield valve port into the shielded insert. The 15-ton crane grapple is disengaged from the facility canister pintle (CCTV cameras and load cells on the crane are used to verify disengagement) and lifted back inside the Hot Cell. When the open port of the Hot Cell shield valve is clear, the shield valve is closed.

4.3.3.5 Facility Cask Loading Room

In the Facility Cask Loading Room, the facility cask, on the facility cask transfer car, has been positioned so that when it is rotated to the vertical position by the facility cask rotating device, it is in alignment with the opening of the Transfer Cell ceiling shield valve and the telescoping port shield. The Facility Cask Loading Room shield door is closed.

When the facility cask has been rotated to the vertical position, the telescoping port shield, mounted in the floor of the Facility Cask Loading Room, is raised to mate with the facility cask bottom shield valve body. The Facility Cask Loading Room 6.25-ton grapple hoist is lowered so that the shield bell is in contact with the facility cask top shield valve body. With the shield bell and the telescoping port shield in contact with the facility cask, a totally shielded volume is formed to allow the safe transfer of a facility canister from the shielded insert into the facility cask.

The top facility cask shield valve is opened, the Transfer Cell ceiling shield valve is opened, then the bottom facility cask shield valve is opened and the facility grapple, attached to the 6.25-ton grapple hoist, is lowered through the facility cask into the Transfer Cell. (Note: the Transfer Cell ceiling shield valve and both facility cask shield valves are interlocked so that the facility cask bottom shield cannot be opened unless the Transfer Cell ceiling shield valve is opened and the Transfer Cell ceiling shield valve cannot be closed unless the facility cask bottom shield valve is closed) The facility grapple engages the facility canister pintle and lifts the facility canister from the shielded insert. The facility canister is lifted inside the facility cask. The bottom shield valve of the facility cask is closed, the Transfer Cell ceiling shield valve is closed, and the facility grapple lowers the facility canister so that it is resting on the gate of the bottom shield valve. The facility grapple disengages from the facility canister pintle and is lifted into the bell shield, then the facility cask top shield valve is closed. The bell shield is then lifted away from the facility cask and the telescoping port shield is lowered. The facility cask is rotated to the horizontal position. The Facility Cask Loading Room shield door is opened.

4.3.4 Waste Shaft Entry Room

In the waste shaft entry room with the waste hoist cage properly positioned, the shaft gates are opened, the pivot rails are positioned, and the facility cask transfer car transports the facility cask onto the waste hoist conveyance. The Facility Cask Loading Room shield doors are closed. The waste hoist conveyance is lowered to the disposal horizon. The facility cask transfer car moves the facility cask from the hoist conveyance into the underground transfer area shown on Figure 4.3-2.

4.3.5 Underground Transfer Area

When the waste shaft conveyance has stopped at the disposal horizon, the shaft gates are opened, the pivot rails are positioned, power cable connected, and the facility cask transfer car moves from the conveyance (Figure 4.3-4) into the transfer area (E-140). The 41-ton forklift forks are inserted into the lower set of forklift pockets of the facility cask and lifts the facility cask from the facility cask transfer car. The forklift lowers the facility cask and transports it to the disposal location at a speed of approximately 3 to 4 mi (4.8 to 6.4 km) per hour.

4.3.6 RH TRU Waste Disposal

At the RH waste disposal location, the 41 ton forklift places the facility cask on the waste transfer machine, which will have been previously aligned with the horizontal borehole (Figure 4.2-26). The facility cask is moved forward to mate with the shield collar and the transfer carriage is advanced to mate with the rear facility cask shield valve. Both facility cask shield valves are opened and the transfer mechanism extends to push the canister into the hole (Figure 4.3-5). After retracting the transfer mechanism into the facility cask, the forward shield valve is closed, and the transfer mechanism is further retracted into its housing. A forklift using the strongback positions a shield plug (Figure 4.2-28) on the shield plug carriage. The transfer carriage is moved to the rear about 6.5 ft (2 m) and a 6-ton forklift places the shield plug carriage (Figure 4.2-25) on the staging platform. The transfer mechanism pushes

the shield plug into the facility cask. The front shield valve is opened and the shield plug is pushed into the hole (Figure 4.3-6).

The transfer mechanism is retracted, the facility cask shield valves are closed, the transfer carriage retracted, and the facility cask removed from the emplacement machine. The emplacement machine is now available for transfer to another location.

4.3.7 Process Interruption Modes

Process interruption modes fall into two categories, routine and emergency/abnormal.

4.3.7.1 Routine Interruptions

Routine interruptions are plant process interruptions, including scheduled maintenance, unscheduled maintenance, and plant inspections during the life of the facility.

Actions taken during a routine interruption are conducted in accordance with established procedures, and monitoring of the plant parameters during the interruption is continued to ensure that no radiological problems are encountered. Any additional inspections that are necessary during the interruption are specified in the procedures.

4.3.7.2 Emergency/Abnormal Interruptions

Emergency interruptions are those process interruptions in the plant due to accident conditions, which include earthquakes, severe weather, and fires.

Earthquake - Normal plant operations may be suspended following an earthquake. If the earthquake is of sufficient magnitude (i.e., seismic event of 0.015 g or greater acceleration), inspection of structures and equipment will be required prior to resuming normal operations. The length of the interruption will depend upon the results of the inspection and all plant recovery corrective actions will be directed toward returning the plant to normal operation.

Severe Weather - Normal plant operations may be suspended during a tornado warning or a high wind condition. A tornado warning or high wind condition will exist based on information provided by the National Weather Service or a local observation. If a severe weather emergency condition occurs at the WIPP facility, inspections of structures and equipment may be required prior to resuming normal operations. The length of the interruption will depend on the results of the inspection, and all plant recovery corrective actions will be directed toward returning the plant to normal operation.

Fires - Fire accidents, although not expected, may result in a process interruption. The occurrence of a major fire requires the evacuation of personnel and response by appropriate emergency personnel. After extinguishing the fire, the area will be surveyed, controls will be established to mitigate any problems, and the area returned to normal operations.

Abnormal Interruptions are any unplanned and unexpected change in a process condition or variable adversely affecting safety, security, environment, or health protection performance sufficient to require termination (stopping or putting on hold) of an operating procedure related to the flow path of radioactive waste processing for greater than four hours.

Loss of Off-Site Power - The loss of off-site power affects all electrical equipment. The plant is designed with a manually started backup power supply, which picks up selected electrical loads such as the AIS hoist, lighting, and ventilation system. Certain equipment has uninterruptible (battery) backup for loss of power so that functions such as parts of the central monitoring system (CMS) continue without power interruption. The site backup power system can maintain the containment functions (e.g., negative pressure ventilation balance), and is discussed in Section 4.6.

4.3.8 WIPP Waste Information System

The RH WAC [1] requires specific information from the waste generators to meet the waste certification requirements. The WIPP waste information system (WWIS) provides an online source of data required by the RH WAC,[1] showing the waste form, type payload, weight, and radionuclide inventory.

The WIPP WWIS is a system of computerized tools in a multiuser relational database designed to facilitate the effective management and tracking of TRU waste from DOE waste generator sites to the WIPP. The WWIS will gather, store, and process information pertaining to TRU waste designated by the Secretary of Energy for disposal at the WIPP. The system will support those organizations who have responsibility for managing TRU waste by collecting information into one source and providing data in a uniform format that has been verified or certified as being accurate. The WWIS will be a reliable, secure, and accurate system to store all information pertaining to characterization, certification, and emplacement of waste at WIPP. Waste information for WWIS will be supplied by the generator sites of the TRU waste and the WIPP facility.

The WWIS includes features to automate the transfer of the data required by the RH WAC [1] from the waste generators to the WIPP and also includes the limiting criteria from the RH WAC[1]. Data input by the waste generators that does not meet these criteria is automatically flagged for review. In addition to providing RH WAC [1] related information for the repository, the WWIS provides operational information, and routine and special reports. See WP 08-WA.06 [2], Appendix A for an example of the WWIS Data Dictionary.

The WWIS provides the following functions:

- Entry and validation of waste characterization data for waste destined for the WIPP.
- Entry and validation of waste certification data for waste destined for the WIPP.
- Entry and validation of waste transportation data for waste destined for the WIPP.
- Entry and validation of waste emplacement location data for waste emplaced at the WIPP.

During the waste handling process, the waste container identity is entered into the WWIS to track the location of the waste, and to verify that the information contained in shipping documents was correct. Once the waste is emplaced, a final set of documents summarizing the contents and final disposition of the waste is generated by the WWIS and added to other pertinent documentation to create the required records. The records generated will be used to show WIPP's compliance with the applicable regulations relative to the type of wastes destined for disposal at WIPP.

4.3.8.1 72B RH TRU Waste Identification

The identification number of each 72B RH TRU waste canister is verified against the container data while the canister is in the Transfer Cell and just before it is loaded into the facility cask.

4.3.8.2 10-160B RH TRU Waste Identification

The identification number of each 10-160B RH TRU waste drum is verified against the container data while the drum is in the Hot Cell after it is unloaded from the road cask.

4.3.9 Underground Mining Operations

4.3.9.1 Mining Method

Mining is performed by continuous mining machines. Prior to mining in virgin areas, probe holes are drilled to relieve any pressure that may be present. After mining, vertical pressure relief holes are drilled up at the main intersections of drifts and crosscuts.

One type of continuous mining machine is a roadheader or boom type continuous miner operating a milling head. The milling head rotates in line with the axis of the cutter boom, mining the salt from the face. The mined salt is picked up from the floor by the loading apron. The muck (mined salt) is pulled through the miner on a chain conveyor, through a slewing conveyor, and then loaded in one of the haul vehicles.

Another type of continuous mining machine is a drum miner operating with a head that rotates perpendicular to the axis of the cutter boom, and cuts the salt away from the working face. The muck is pulled through the miner on a chain conveyor and then loaded in one of the haul vehicles.

During and immediately after mining, a sounding survey of the roofs of drifts is made to identify areas of drummy or slabby rock, which might represent safety or stability problems. A comprehensive underground safety and maintenance program has been established and can be found in procedure WP 04-AU1007, Underground Openings Inspections.[3]

Remedial work, including hand scaling of thin drummy areas, removal of larger drummy areas up to 18 in thick with the continuous miners, or rock bolting, is accomplished immediately after soundings in any areas identified as potentially unstable. Additional scaling is performed, as required, using a mechanical scaler, improving the safety of this operation.

Rock bolts are used extensively throughout the underground openings for remedial work and for safety. In addition, roofs in the first waste disposal panel and high traffic areas are pattern bolted for extra safety. Both resin and mechanical bolts are used in most ground control activities. Only certified bolts are used at the WIPP; the specifications in WP 04-AU1007 [3] and 30 CFR 57, Safety and Health Standards - Underground Metal and Nonmetal Mines [4] are used in defining bolting requirements for the underground.

The WIPP engineering staff is responsible for ensuring that ground control systems comply with all rules and regulations.

4.3.9.2 Interface Between Mining and Waste Disposal Activities

Separate mining ventilation and disposal ventilation circuits are maintained by means of temporary and permanent bulkheads. Air pressure in the mining side is maintained higher than in the disposal side to ensure that any leakage results in airflow to the disposal side. The underground ventilation system is discussed in Section 4.4.3. Rooms being mined are within the mining ventilation circuit, and rooms under disposal are within the disposal ventilation circuit.

4.3.9.3 Mined Material

The salt removed during underground mining is brought to the surface by the salt handling system. From the surge pocket, salt is loaded into the 8-ton salt handling skip with a skip measuring and loading hopper, the skip is raised to the surface, and dumped through a chute to surface haulage equipment which transports the salt to an on-site storage pile.

4.3.9.4 Ground Control Program

The WIPP facility ground control program ensures underground safety from any potential unplanned roof or rib falls. Care is taken from the moment a drift is mined and throughout the life of the opening to remove or restrain any loose or potentially unsafe pieces of ground. As the opening ages, areas of the roof, ribs, and floor may require some ground control. To ensure this is achieved in a timely and efficient manner, a very comprehensive ground control monitoring program has been established.

Ground Control Planning

An internal ground control operating plan is used to guide both short and long-term planning. For the purpose of ground control activities, the underground facility at the WIPP site is divided into over 100 zones. These zones facilitate detailed evaluation and documentation of the status and conditions of the underground. A database has been developed which documents the current status of each ground control zone. The current status refers to the physical state of an underground excavation (zone) with respect to geometry, excavation age, ground support, and operational use. The data collected for the plan and the evaluation of those data are most useful when used or considered immediately after collection. Detailed work packages are developed specifically for each ground control activity. The plan also serves as a foundation document for the development of the Long-Term Ground Control Plan.[5]

The Long-Term Ground Control Plan[5] provides a strategy for development and selection of the most applicable and efficient means of maintaining and monitoring the ground conditions of the WIPP in order to assure safe and operational conditions from the present time to closure of the facility. The plans for the most current years covered by the plan are explained in more detail than the later years, since it is easier to predict the immediate future than the distant future. The Long-Term Ground Control Plan[5] addresses technical aspects of the underground facility which are concerned with the design, construction, and performance of the subsurface structures and support systems. In particular, this plan addresses the requirement for maintaining the ground conditions in the underground facility in a safe and operational state for its anticipated lifetime.

Topics associated with the stability of the roof of the underground facility are the primary focus of the Long-Term Ground Control Plan.[5] During the period of time that the underground has been active, a variety of ground control issues have been encountered ranging from minor spalling to roof falls. Minor spalling is small pieces of the back flaking off or falling. The ground control program consists of many aspects which include continuous visual inspections of the underground openings, extensive geotechnical monitoring, numerical modeling, analysis of rockbolt failures, implementation of ground control procedures, and comprehensive in situ and laboratory testing and evaluation of ground control components and systems.

Each year the Long-Term Ground Control Plan[5] is rolled forward one year. This revision takes into account developments in both WIPP and industrial support practices and materials, and any changes in WIPP life and operational requirements. WIPP ground control plans are living documents that keep ground control practice at WIPP both current and responsive.

Ground Control Practice

A comprehensive ground control program for the entire underground facility is followed at WIPP to ensure safe conditions, operational efficiency, reliability and confidence, and regulatory compliance for personnel and equipment.

Qualified and experienced personnel in Geotechnical Engineering, Mine Engineering, and Underground Operations are responsible for and committed to the success of this program. The elements of the program are monitoring; initial and on-going evaluation; engineering design and specification; data collection and analysis; implementation; and maintenance as necessary. These elements include the following main activities.

- Monitoring: The geotechnical performance of the underground facility is regularly evaluated by the Geotechnical Engineering section. This evaluation is focused on providing early detection of conditions that could affect safety and operations, and to permit further engineering analysis of the performance of WIPP excavations in salt. At present there are over 1,000 instruments installed underground, and additional instruments are installed as conditions warrant. Daily and weekly visual examinations are performed by Mine Operations staff.

- Evaluation: Geotechnical and mining engineers perform a variety of rock mechanics analyses to ensure that rock mass behavior is correctly understood and proper ground control measures are instituted from the beginning.

- Engineering Design and Specification: The ground support system is designed and specified to ensure the safety of staff and to facilitate operations. Maintenance activities are specified in performance standards and procedures so that ground conditions presenting a potential hazard are safely rectified. Ground control problems are addressed on an individual basis so that the most appropriate method of remediation is implemented. Geotechnical Engineering is constantly improving ground support systems in order to provide the most effective and safe methods and materials possible for the underground facility.

- Data Collection and Analysis: Field activities are established for data collection from geotechnical instrumentation, fracture and excavation effect surveys, and general observations. Ground conditions are examined on a regular basis (at the beginning of each shift, weekly, monthly, and annually according to regulatory requirements and operating plans). Monitoring results are analyzed in comparison with established design criteria, and are utilized in a variety of computer models. The results of these studies are published in a variety of formats ranging from specific reports through frequent regular assessments (e.g., bi-monthly summaries) to comprehensive annual reports (e.g. Geotechnical Analysis Report), which are available to the public in reading rooms. All data and related documentation are maintained in databases which are regularly subjected to quality assurance audits. These data are available to those who make independent assessments.

The fundamentals on which the ground control program at the WIPP facility are based are as follows:

- Ground stability is maintained as long as access is possible.
- Ground control maintenance efforts increase with the age of the openings.
- Ground control plans are specific but flexible.
- Regular ground control maintenance is required.

The ground control program at the WIPP facility uses observational experience and analysis of salt behavior underground to enable various projections regarding future ground support requirements. This approach recognizes that salt moves or creeps. Because of its plastic nature, salt will flow into an excavated opening. To provide long-term ground support, the ground control system must:

- Accommodate the continuous creep of salt
- Retain broken fractured rock in the back or rib

Two major categories for support systems are rock bolts and supplementary systems. The rock bolt systems are mechanically-anchored bolts and resin-anchored threaded rods. The supplementary systems include cables with mesh, trusses, and the Room 1, Panel 1 design.

Initial Roof Support System (Rock-Bolt System)

Prior to waste emplacement in any specific area (room), the plans (for Panels 2-8) are to spot bolt with short, mechanically anchored bolts only as necessary, if spalls or loose ground are encountered during and after the mining process. Mesh may be used in conjunction with these bolts to secure any loose ground encountered during normal inspection processes. These bolts would not penetrate through to the next clay/anhydrite interface, and would be anchored within the beam formed by the mine roof and the clay/anhydrite interface above. This is the primary or initial support which will be used in Panels 2-8.

However, based on experience with the Site and Preliminary Design Validation (SPDV) rooms and the rooms in Panel 1, pattern bolting is not expected to be required until 2-5 years after excavation. Disposal rooms may be pattern bolted prior to waste emplacement. The expert panel convened to study Panel 1 in 1991 concluded that the then current support technology of 10 ft (3.05 m) long mechanical bolts used in Panel 1 should be adequate to ensure stability for 7 to 11 years from the time of excavation. These bolts were installed beginning approximately two years after initial excavation on a pattern described as a 5 ft by 5 ft (1.5 m by 1.5 m) offset pattern (one bolt per 25 ft^2 [2.3^2 m]). Experience in Panel 1 confirms the conclusion of the expert panel. Plans call for bolt systems installed in future bolt patterns to be equal to or exceed the bearing characteristics of the mechanically anchored bolts used in the primary pattern in Panel 1.

The justification for choosing these systems includes their demonstrated ability to support the expected loads. In the case of yielding systems, they will be chosen based on their support capabilities and the ability to accommodate expected rock deformation.

Primary support will consist of Grade 75 steel mechanically-anchored bolts of at least 5/8 in (1.6 cm) diameter. Depending on the need, the bolts may be as short as 24 in (61 cm) and as long as 72 in (183 cm). Mesh may be chain-link, welded wire, or polymer.

Pattern bolting will be designed using the best support technology available at the time. Because yielding systems are still under evaluation, current plans call for use of Grade 60 threaded bars of at least 7/8 in (2.2 cm) diameter installed on a maximum 5 ft by 5 ft (1.5 m by 1.5 m) pattern in the center half of the room. The bars would be resin-anchored above the first clay/anhydrite interface. Four or 6 ft (1.2 or 1.8 m) long mechanical bolts would be used near the ribs.

Materials procured for installation as primary support, spot bolting, and pattern support will meet the requirements of 30 CFR 57, Subpart B.[4] This requirement will be verified as part of the quality assurance program. Primary support installation requires quality control by the installation crews. Proper installation is confirmed as part of the audit function of the underground safety and Quality Assurance groups. Quality control and assurance is more rigorous during a pattern bolting sequence. Work instructions for the sequence will require Quality Assurance to perform at least one random inspection to verify that material requirements and hole construction specifications are met.

Operations (construction) supervisors will also be responsible for monitoring the construction. Finally, before turnover or completion of the installation, Quality Assurance will review the work, and certify their approval. Independently, MSHA inspectors also perform a Quality Assurance function during their frequent inspection visits to the WIPP, making certain that support construction is performed in accordance with 30 CFR 57, Subpart B.[4]

Supplementary Support Systems

Similar to the plan for pattern bolting, any supplementary system will be designed using the best support technology available at the time. Should a supplementary support system be required, it is anticipated that, if not already in place, mesh will be installed over the primary and pattern support. The mesh will be augmented either by cables (wire ropes) anchored near the ribs and suspended across the rooms or by steel mats. The cables or mats and, therefore, the mesh will be further pinned to the roof by bolting. The use of either the cables or mats in conjunction with meshing and re-bolting should be adequate in supporting even a highly fractured roof beam.

Support System Performance

Several distinct ground-support systems are installed in Panel 1. They can be generally grouped as rigid, non-yielding systems and yielding systems. Rigid, non-yielding systems are not designed to accommodate salt creep. However, they do respond to creep and continue to provide support during ductile behavior. Based on experience with Panel 1, if Panels 2-8 are excavated and each are filled within five to seven years, these non-yielding systems should provide the necessary support. If pattern bolting is performed just prior to waste emplacement in each room or area, experience at the WIPP has shown that these rigid systems can certainly accommodate the salt creep that will occur during the one to two years of emplacement.

The ground support system installed in Room 1, Panel 1 is a yielding system only as long as access can be maintained. This is because of the necessity to manually reduce the tension of the bolts. If the detensioning process is stopped, the system becomes a rigid, non-yielding system and will undergo the same ductile behavior as other rigid systems.

Other yielding systems are installed in the WIPP underground and each is being evaluated. Each of these systems is designed to yield at predetermined loads. All are designed to work over their prescribed yield interval without maintenance. Some of the systems are designed to respond to the loading by salt creep and provide over one ft of yield without system degradation. A detailed evaluation of the adequacy of these systems is not possible at this time.

The initial roof support system, consisting of mechanical anchor bolts, was installed in 1988. The ground control design was developed based on information obtained from the SPDV rooms. Panel 1 rooms were pattern bolted with 10 ft (3.05 m) long, 3/4 in (19 mm) diameter, mechanical anchor bolts on a 3.0 ft (0.9 m) by 3.9 ft (1.2 m) center spacing through the middle third of each room. The outer third along each rib uses the same roof bolt but on a 3.9 ft (1.2 m) by 6 ft (1.8 m) center spacing pattern.

The original design for the waste disposal rooms at the WIPP provides a limited period of time during which to mine the openings and to emplace wastes. Each panel, consisting of seven disposal rooms, is scheduled to be mined and filled in less than five years, at which time it would be closed. Field studies, part of the SPDV Program, showed that unsupported openings of a typical disposal room configuration would remain stable, and that creep closure would not impact equipment clearances during at least a five year period following excavation. The information from these studies verified that the design of openings for the permanent disposal of wastes under routine operations was acceptable.

Panel 1 was developed to receive waste for a demonstration phase that was scheduled to start in October 1988. The original plan consisted of the storage of drums of CH TRU waste in panel rooms for a period of 5 years. During this time and immediately following it, the rooms were to be inaccessible, but the option to reenter was to be maintained so that waste could be removed, if required. The demonstration phase was later deferred, and an experimental program was added in Room 1, Panel 1. This led to more stringent requirements for roof stability.

To ensure the roof stability for the revised tests and durations, a supplemental roof support system was designed. The Supplemental Roof Support System is designed to contain and support the weight of a detaching salt wedge of the immediate roof, if one begins to form, while allowing it to be deformed by creep behavior. The system is not designed to prevent the creep of salt into the room. The Supplemental Roof Support System consists of 26 steel channel support sets, installed laterally across the room on approximately 10 ft (3.05 m) centers. Each channel support set is carried by 11 resin anchored roof bolts. The bolts are anchored over the interval between 8.5 and 11.5 ft (2.6 and 3.5 m) into the roof, which is above the expected failure surface. The roof area between the channel sets is covered by a network of steel wire lacing cables, which hold a mat of steel wire mesh and expanded metal against the rock salt surface.

The design of this system was subjected to exhaustive scrutiny by two formal Design Review Panels. The first review was conducted by qualified project personnel from the Westinghouse Waste Isolation Division (WID) Engineering, Operations, Quality Assurance, and Safety groups with the participation of SNL. A second formal review was conducted by a panel of rock mechanics experts not associated with the WIPP project. This Expert Review Panel consisted of representatives from the mining industry, U.S. Bureau of Mines, Mine Safety and Health Administration (MSHA), academia, and independent consultants. These Design Review Panels approved the design based on evaluation of design documents, on-site observations at the WIPP underground facility, and detailed discussions with members of the design team.

The support system is adjusted (Room 1, Panel 1 only) to ensure that the loads on the anchors do not exceed the working loads specified by the design. Support system monitoring results are used to determine when load adjustments (or other maintenance) are required. When the load on the bolt approaches 20,000 lbs (9070 kg), the bolts are adjusted to about 5000 lbs (2268 kg). Modifications were made to the support system to improve the reading accuracy of the monitoring system. This provided a better interaction between the rock and the support system.

A monitoring program for Room 1, Panel 1 has been in place since initial excavation of the room. Room stability has been assessed from monitoring of room closure, rock deformations in and around the room, and fracture development and separation. The deformation data collected by the monitoring system is then compared against previously acquired data to identify deviations from expected performance. This program has provided a great deal of information on support system performance, room and rock mass behavior, and ground control techniques and materials.

4.3.9.5 Geotechnical Monitoring

Geotechnical data on the performance of the repository shafts and excavated areas are collected as part of the geotechnical field-monitoring program. The results of the geotechnical investigations are reported annually. The report describes monitoring programs and geotechnical data collected during the previous year.

Instrumentation, Monitoring, and Evaluation

The WIPP geotechnical programs are conducted in accordance with written procedures, and provide in-situ data to support continuing assessments of the designs for the shafts and underground facilities. The safety of the underground excavations is, and will continue to be evaluated on the basis of criteria established from actual measurements of room behavior. These criteria are regularly evaluated and modified as more field data are collected, and additional experience is gained with the performance of the WIPP underground excavations.

Geotechnical monitoring programs provide measurement of rock mass performance for design validation, routine evaluation of the safety and stability of the excavations, and the short-term and long-term behavior of underground openings. The minimum instrumentation for Panels 2 through 8 is one borehole extensometer installed in the roof at the center of each disposal room. The roof extensometers will monitor the dilation of the immediate salt roof beam and possible bed separations along clay seams. Additional instrumentation may be installed as conditions warrant.

Geotechnical Engineering evaluates the performance of the excavation. These evaluations will provide an assessment of the effectiveness of the roof support system and an estimate of the stand-up time of the excavation. If the trend is toward adverse (unstable) conditions, the results of these assessments are reported to the Operations Manager to determine if it is necessary to terminate waste disposal activities in the open panel.

Data collection, analyses, and evaluation criteria ensure that geotechnical monitoring results provide timely indications of changes in measured room closure rates over time, and when those measured room closure rates exceed projected values. Closure rates are compared to projected values based on statistical evaluations of closure data that are updated annually. Areas with observed rates which significantly vary from projected values are monitored more closely to determine the cause of the variance. If the cause cannot be related to operational considerations, such as mining activity, then additional field investigation is undertaken to characterize the conditions. Should the field data indicate that ground conditions are deteriorating, corrective actions are taken as required.

Geologic investigations provide ongoing data collection on the geotechnical performance of the underground facility, and include geologic and fracture mapping, seismic monitoring, and special activities performed as-needed. Further assessments of the geotechnical performance of the excavations are made using borehole inspections to detect displacements, fractures, and separations occurring within the strata immediately surrounding the excavations. The results of geologic investigations provide continued confidence in the performance and geology of the site with respect to site characterization.

All data obtained are maintained for data reduction, tabulation, analysis, and archiving. The annual Geotechnical Analysis Report provides the principal documentation of data, describes the techniques used for data acquisition, and summarizes the performance history of the instruments. The report also details the geotechnical performance of the various underground facilities including shafts, and provides an evaluation of the geotechnical aspects of performance in the context of the relevant design criteria developed during the SPDV phase. The Geotechnical Analysis Report is reviewed by the DOE and its contractors for technical accuracy. These reports have been regularly prepared, audited for quality assurance, and made publicly available since 1983.

The assessment and evaluation of the condition of WIPP excavations is an interactive, continuous process using the data from the monitoring programs. Criteria for corrective actions are continually reevaluated and reassessed based on total performance to date. Actions taken are based on these analyses and planned utilization of the excavation. Because WIPP excavations are in a natural geologic medium, there is inherent variability from point to point. The principle adopted is to anticipate potential ground control requirements and implement them in a timely manner rather than to wait until a need arises.

References for Section 4.3

1. DOE/WIPP-Draft 7-3123, Remote-Handled Waste Acceptance Criteria for the Waste Isolation Pilot Plant.

2. WP 08-WA.06, WIPP Waste Information System Software Requirements Specification

3. WP 04-AU1007, Underground Openings Inspections.

4. 30 CFR 57, Safety and Health Standards - Underground Metal and Nonmetal Mines, 8th edition, 1994.

5. WIPP/WID 96-2180, Long-Term Ground Control Plan for the Waste Isolation Pilot Plant.

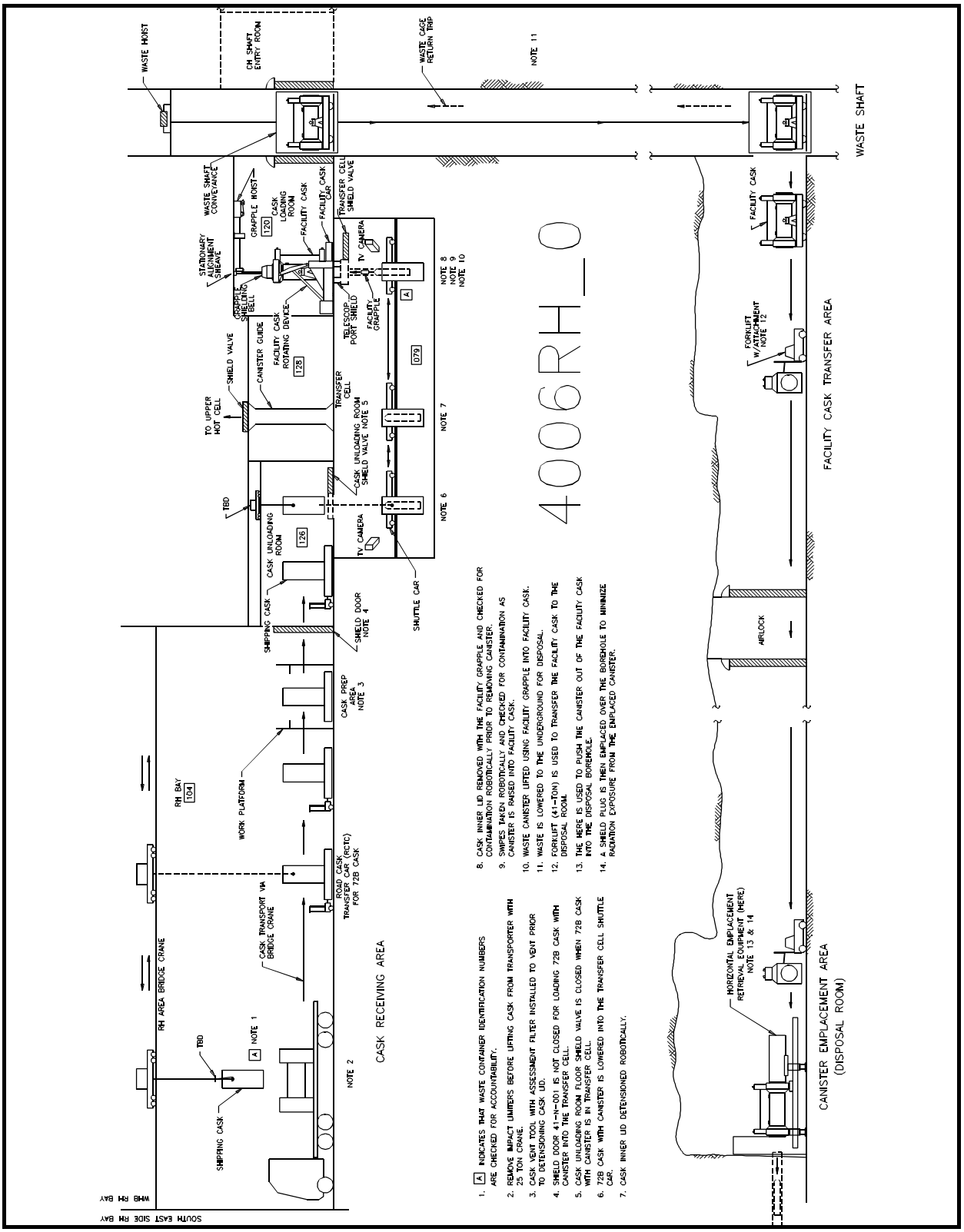

Figure 4.3-1 72B RH TRU Process

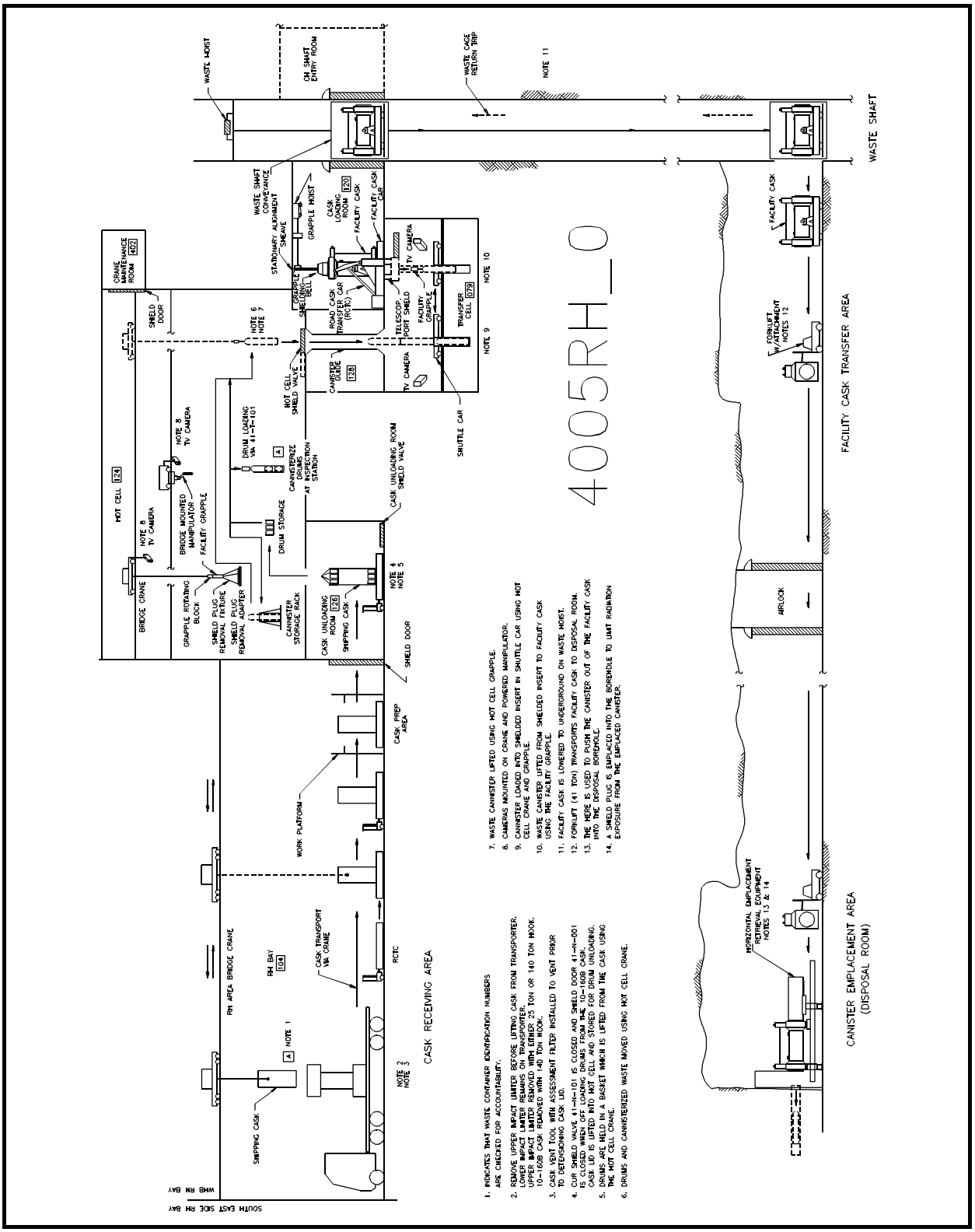

Figure 4.3-2 10-160B RH TRU Process

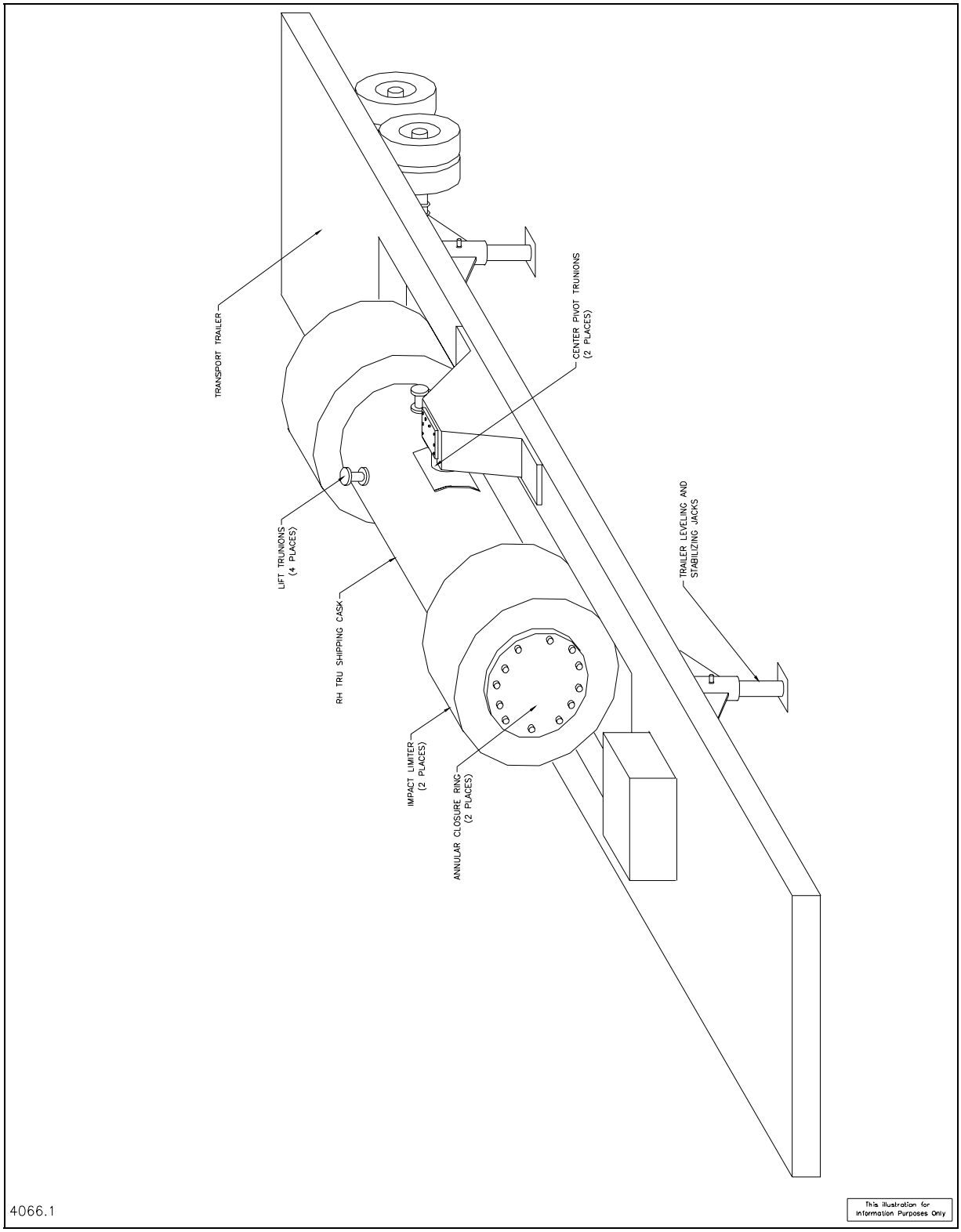

Figure 4.3-3 72B RH TRU Road Cask on Trailer

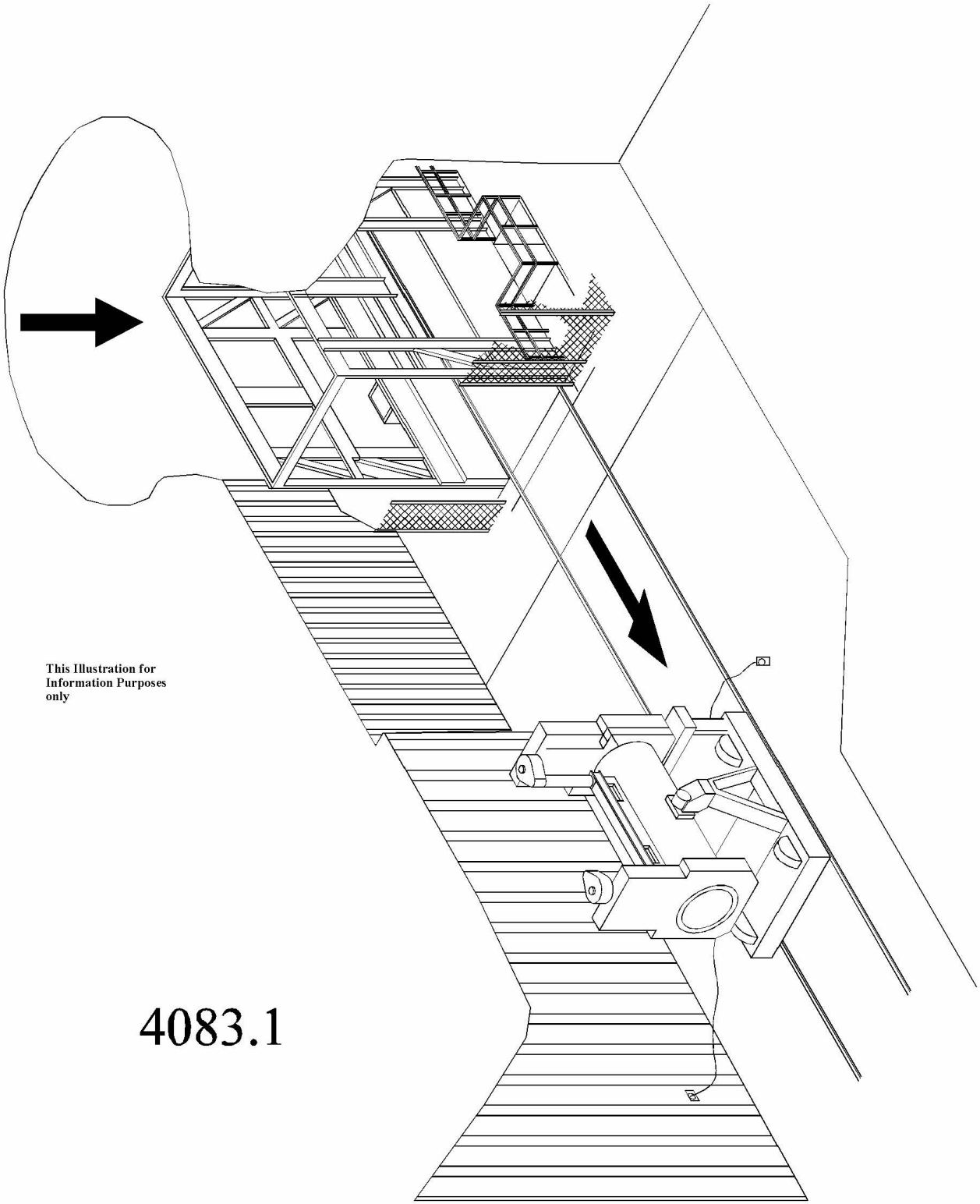

Figure 4.3-4 RH TRU Waste Handling Facility Cask Unloading from Cage

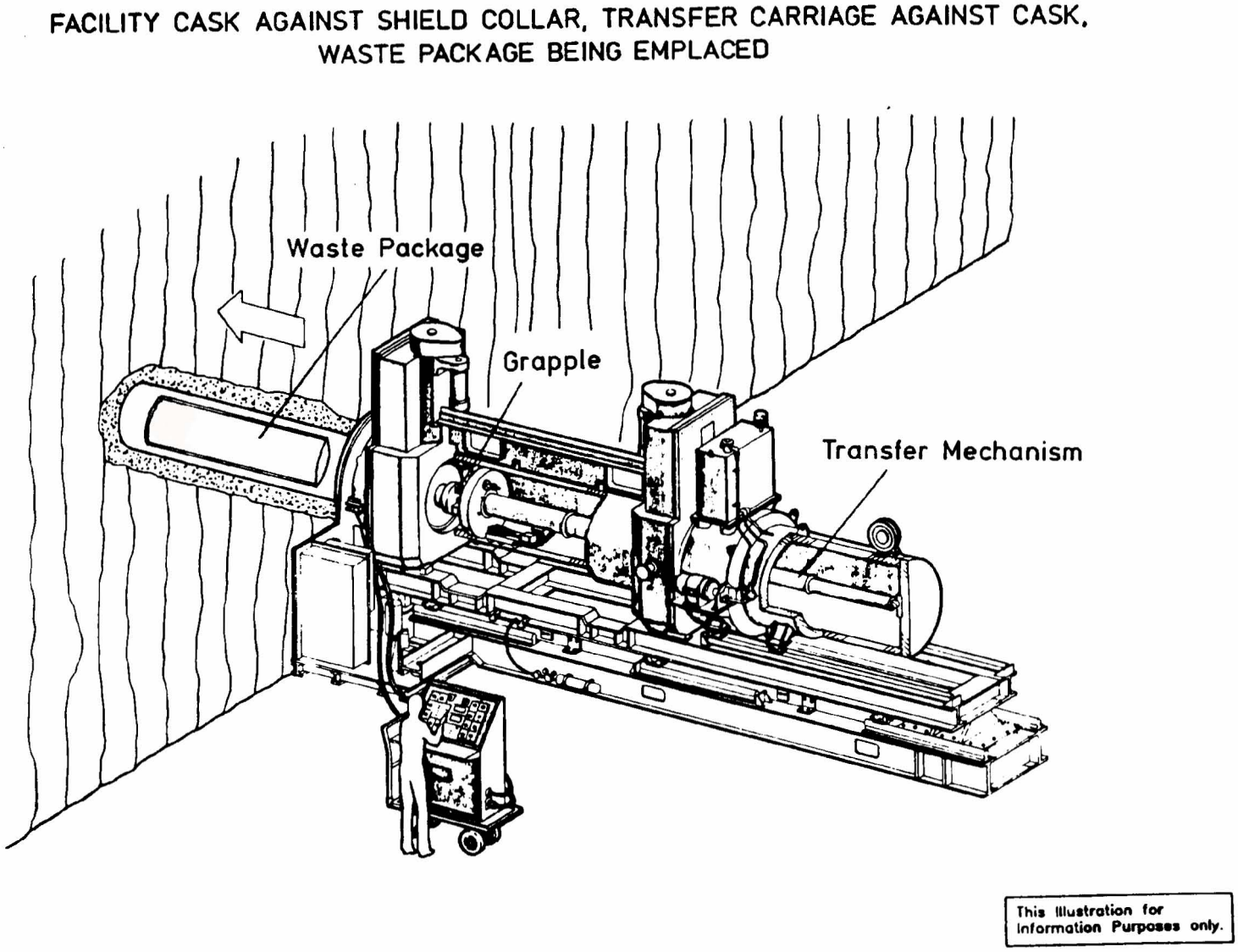

4088.1

Figure 4.3-5 Waste Emplacement Equipment

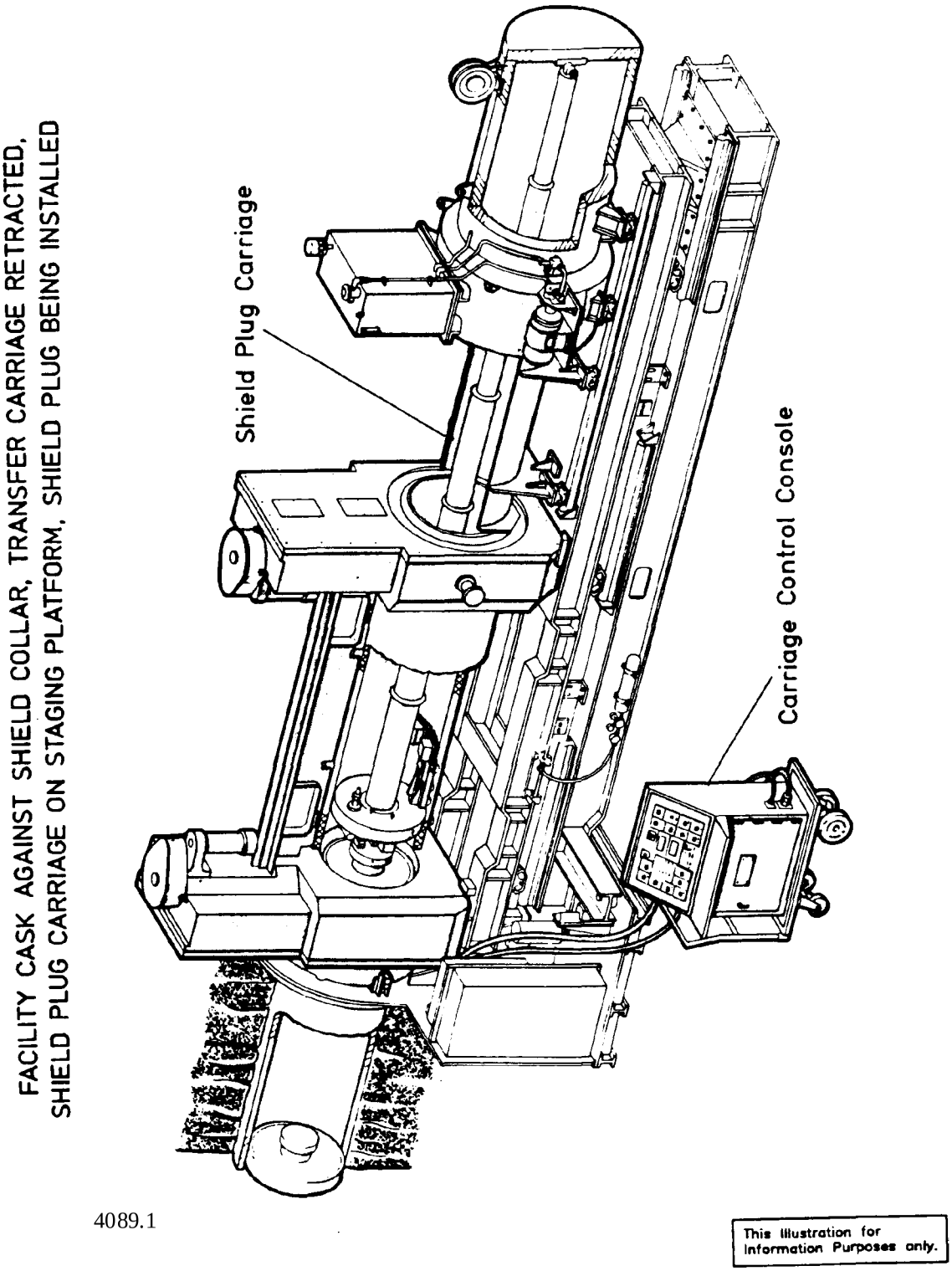

Figure 4.3-6 Installing Shield Plug

This page intentionally blank

4.4 Confinement Systems

The WIPP facility confinement system consists of static and dynamic barriers designed to meet the following requirements of DOE Order 6430.1A,[1] Section 1300-7:

- Minimize the spread of radioactive and other hazardous materials within the unoccupied process areas.
- Prevent, if possible, or minimize the spread of radioactive and other hazardous materials to occupied areas.
- Minimize the release of radioactive and other hazardous materials in facility effluents during normal operation and anticipated operational occurrences.
- Limit the release of radioactive and other hazardous materials resulting from Design Basis Accidents (DBAs) including severe natural phenomena and man-made events in compliance with the guidelines contained in DOE Order 6430.1A,[1] Section 1300-1.4.2, Accidental Releases.

In addition to the above requirements, the WIPP is designed to meet the specific confinement requirements of DOE Order 6430.1A,[1] Section 1324-6 and Section 1300-1.4.

Static barriers are structures that confine contamination by their physical presence, while dynamic barriers control the flow of contamination in the air. For the WIPP, static barriers consist of waste containers, building structures, geological strata, and HEPA filtration systems; dynamic barriers consist of the surface and subsurface ventilation systems that maintain pressure differentials ensuring airflow is from areas of lower to higher contamination potential.

For the WIPP, the primary confinement is the static barrier consisting of the waste containers, and the secondary confinement consists of those SSCs designed to remain functional (following DBAs) to the extent that the guidelines in DOE Order 6430.1A,[1] Section 1300-1.4.2, Accidental Releases, are met.

Consistent with DOE Order 6430.1A,[1] Section 1324-6, tertiary confinement is not required for the WIPP during disposal operations.

Confinement system design within DOE Order 6430.1A,[1] requirements meets the requirements of DOE O 420.1, Facility Safety.[2]

4.4.1 Waste Handling Building

Static and dynamic barriers are incorporated into the design of the WHB confinement system, and the primary confinement is the canister holding the waste.

The secondary confinement consists of the SSCs that house the primary confinement, including the shielded road cask, the shipping canister when loaded with 55-gallon drums, the rooms, the building walls, and the ventilation system, which maintains a static pressure differential between the primary confinement barriers and the environment. To assist the ventilation system, "air locks" are provided between separate areas where pressure differentials are necessary. The WHB HEPA filtration system connects with the ventilation systems and provides the final barrier for airborne particulates.

4.4.2 Underground

The primary confinement system for the underground is the canister being disposed in the underground. The secondary confinement consists of the natural barrier formed by the salt in the underground disposal areas and the underground bulkheads, which separate the disposal and mining areas. The underground ventilation system has provisions for exhausting to the exhaust filtration system, when in use, to mitigate any accidental releases of contaminated airborne particulates.

4.4.3 Ventilation Systems

The WIPP facility air handling systems are designed to provide a suitable environment for personnel and equipment during plant operations, and to provide contamination control for operational occurrences and postulated waste handling accidents. Certain components of the air handling systems are also used for functions related to space cooling and removal of heat. The WIPP facility air handling systems serve three major plant areas: the surface facilities, the surface support facilities, and the subsurface facilities. The air handling systems are designed to meet the emissions limitations in DOE Order 5400.5[3] using the following general guidelines:

- Transfer and leakage air flow is from areas of lower to areas of higher potential for contamination.
- In building areas that have a potential for contamination, a negative pressure is maintained to minimize the spread of contaminants.
- Consideration is given to the temporary disruption of normal air flow patterns due to scheduled and unscheduled maintenance operations by providing dual trains of supply and exhaust equipment. Air handling systems are provided with features to reestablish designed airflow patterns in the event of a temporary disruption. Generally, ducts that carry potentially contaminated air are routed away from occupied areas. In addition, potentially contaminated ducts are welded to the maximum extent practical to reduce system leakage.

The filtration system consists of pre-filters and HEPA filters sized in accordance with design air flows utilizing the manufacturer's rating standards for maximum efficiency.

HVAC components are sized so that some components can be taken out of service for maintenance, allowing the system to continue operation. The schematic flow diagrams of the ventilation systems are shown in Figures 4.4-1a through 4.4-5.

4.4.3.1 Surface Ventilation Systems in Controlled Areas

There are independent ventilation systems for each of the following areas:

- Waste shaft hoist maintenance room
- CH waste handling area
- Hot Cell
- RH waste handling area
- WHB mechanical equipment room
- Waste handling shaft hoist tower

- EFB

The waste shaft hoist maintenance room is outside the CA and the ventilation system that serves this area is not expected to contain radioactivity. The ventilation systems for the WHB and EFB are "once through" systems designed to provide confinement barriers with the capability to limit the extent of releases of airborne radioactive contaminants. The ventilation systems are also designed to provide the necessary heating, ventilating, and air conditioning for personnel comfort and to remove heat.

The WHB ventilation system continuously filters the exhaust air from waste handling areas to reduce the potential for release of radioactive effluents to the environment. Some of air from the waste handling areas can flow down the waste shaft.

The design provides for differentials to be maintained between building interior zones and the outside environment, maintaining control of potentially contaminated air. The pressure differentials between different interior potential for contamination areas are based on the design contamination zone designations with respect to function and permitted occupancy. ERDA 76-21[4] is used as a guide in establishing zone differential pressures.

The ventilation systems supply 100 percent outside air conditioned to provide a suitable environment for equipment and personnel. Design air quantities limit the spread of airborne radioactive contaminants and maintain design temperatures.

The design provides for "air locks" in the following circumstances:

- At entrances to potentially contaminated areas to maintain a static barrier
- Between areas of large pressure differences to provide a pressure transition and to eliminate high air velocity, dust entrainment, and eddy currents
- Between areas where pressure differentials must be maintained
- To minimize air movement from the WHB to the waste shaft

The ventilation systems are designed to provide adequate instrumentation monitoring the operating parameters. The following parameters are monitored:

- Pressure drop across each prefilter and HEPA filter bank
- Air flow rates at selected points, e.g. downstream of the HEPA filters (Station C)
- Pressure differentials surrounding areas of high potential for contamination levels

Fresh air supply intakes are located away from the exhaust vent to minimize the potential for the intake and re-circulation of exhaust.

The operation of the supply and exhaust fans is controlled by electrical motor interlocks to maintain the designed air flow patterns and sufficient air leakage into the building. The exhaust fans and controls are capable of being supplied by backup power in the event that normal power is interrupted.

4.4.3.1.1 RH TRU Waste Handling Area

The CH and RH TRU waste handling areas are served by separate, independent ventilation systems, shown on schematic flow diagrams, Figures 4.4-1a through 4.4-3. Both supply systems are Design Class IIIB, and the exhaust systems are Design Class IIIA, with the exception of HEPA filter units and associated isolation dampers, which are Design Class II.

Fan operating status, filter bank pressure drops, and static pressure differentials are monitored in the Central Monitoring Room (CMR). Excessive HEPA filter pressure drops alarm in the CMR.

The Station C radiation fixed air sampling system has provisions for monitoring the effluent air discharged from the exhaust vent.

In the RH TRU waste handling area, particular design consideration is given to inhibit the potential for spreading airborne radioactive particles from the Transfer Cell and the Hot Cell. The main air supply to the CUR, Transfer Cell and Facility Cask Loading Room is from the RH Bay. Additional ventilation air enters the Transfer Cell when the CUR or the Facility Cask Loading Room shield valves are open. Sufficient exhaust capacity is provided to maintain the design pressure differential between the Transfer Cell and the adjoining rooms or to maintain at least 125 linear ft/min (0.635 m/s) inward flow through the maximum credible breach, minimizing the potential for contaminants to escape. The exhaust air from the Transfer Cell joins the RH Bay exhaust. The supply air to the Hot Cell is drawn by the Hot Cell exhaust fan from the RH Bay into the Hot Cell. The duct that carries the air to the Hot Cell has a damper arrangement that allows air to flow directly from the RH Bay or through an air handling unit (AHU) with a chilled water cooling coil. The AHU fan is necessary to overcome the additional air pressure drop caused by the cooling coil. The AHU fan, chilled water coil, and damper realignment are controlled by a temperature sensor located in the Hot Cell exhaust Duct. The static pressure in the Hot Cell is maintained by control of the Hot Cell exhaust fans. Air flow from the Hot Cell is by either of two exhaust fans drawing air through two of three HEPA filter units. Additionally, when the Hot Cell shield valve is open, air will enter the Hot Cell from the Transfer Cell.

The waste shaft is separated from the RH waste handling area by a door that opens into the Facility Cask Loading Room. The door, which is normally closed, minimizes the air movement between the RH waste handling areas and the shaft.

Major Components and Operating Characteristics - The ventilation supply and exhaust systems for each building subsystem supply air to the rooms of the areas served. Each supply air handling unit consists of filters, cooling coils, heating elements, fans with associated duct work, and controls to condition the supply air maintaining the designed temperature during winter and summer. Exhaust air is filtered and monitored by the radiation monitoring system.

In the event of a tornado, tornado dampers will **automatically** close to prevent the outward rush of air caused by a rapid drop in atmospheric pressure. Damper closure mitigates the destruction of HEPA filters and ducts by preventing a high-pressure differential from affecting the filters.

Safety Considerations and Controls - The exhaust system remains functional to the extent that confinement and differential pressures are maintained, exhaust air is filtered, and during a tornado excessive flow that could cause duct damage is prevented by automatic tornado dampers.

In case of an off-site power failure, the capability exists to selectively switch one exhaust fan to the backup power system in order to continue to exhaust air in the designed flow pattern. Backup power is applied to exhaust fans in accordance with the WIPP procedure WP 04-ED1342, Surface Backup Power Distribution [5].

The supply and exhaust fans are designed and interlocked to maintain the RH Waste Handling Area, except the RH Bay, at sub-atmospheric pressure and maintain the design airflow requirements. During normal operation, if an operating exhaust fan fails, the corresponding supply fan is stopped in order to prevent positive building pressure. If a corresponding supply fan fails, the exhaust fan also stops but may be operated in manual mode to insure sub-atmospheric pressure conditions within the RH waste handling path. Both trains of RH supply and exhaust fans must operate in order to maintain room differential pressure set points in the RH portion of the WHB.

Sufficient remote instrumentation is provided enabling the operator to monitor equipment from the CMR. The monitored parameters include fan operating status, filter bank pressure drop, and static pressure differential in areas of the Transfer Cell, the Hot Cell and the cask preparation station. The CMR also receives alarm signals for main exhaust fan failure, main exhaust fan low flow and from the CAMs monitoring RH exhaust. The CAMs have alarms for excessive radiation levels (Hi and Hi-Hi Alpha and Beta/Gamma alarms) and low flow.

Filter differential pressure is displayed in the CMR. An alarm for a pressure drop indicating filter replacement is needed actuates at a predetermined level across the HEPA filters.

Instruments and system components are accessible for, and will be subject to, periodic testing and inspection during normal plant operation.

For those HEPA filters which are on-line continuously in the WHB, the CMS monitors prefilter pressure differential (D/P) and HEPA D/P ensuring satisfactory system operation. The EFB HEPA filters are normally off-line, and not subject to dust buildup during normal operation. All nuclear grade HEPA filters are tested for conformance with ANSI N510,[6] and have a combined 99.95 percent removal efficiency per stage.

4.4.3.1.2 Mechanical Equipment Room

The mechanical equipment room is maintained at a pressure slightly below atmospheric to minimize leakage of room air, which may contain airborne radioactive contaminants. Negative pressure is maintained by the same exhaust fan systems that exhaust air from the CH TRU and RH TRU waste handling areas. This equipment room is maintained within design temperature limits for equipment and personnel.

4.4.3.1.3 Waste Handling Shaft Hoist Tower

The ventilation system provides filtration of supply air, unit heaters to prevent equipment from freezing, and a unit cooler to provide supplementary cooling of equipment in summer. Exhaust airflow is down through the tower and into the waste shaft, where it combines with incoming air from the waste shaft auxiliary air intake tunnel (Figure 4.4-3).

A pressurization system serves the air lock to the crane maintenance room at 142 ft-1 in (43.3 m) elevation and pressurizes the air lock preventing the release of potentially contaminated air from the crane maintenance room to the 142 ft-1 in (43.3 m) elevation access corridor.

4.4.3.1.4 Exhaust Filter Building

A schematic flow diagram of the EFB ventilation system is shown in Figure 4.4-4. This building supports the operation of the underground ventilation system and contains the underground ventilation system pre-filters and HEPA filters.

The function of the ventilation system in the EFB, major components, operating characteristics, safety considerations, and controls, are similar to the TRU waste handling areas in the WHB.

Each supply air handling unit in the EFB consists of prefilters, an electric heating coil, and a fan to condition the air, as required to maintain the design temperature.

The EFB ventilation system exhausts air from all potentially contaminated areas of the building through two filter housings, each containing a bank of prefilters and two stages of HEPA filters, and two exhaust fans before discharging to the atmosphere. The building's exhaust air is discharged to the underground exhaust duct so that it can be monitored for airborne radioactive contaminants.

4.4.3.2 Surface Support Structures Ventilation System

The following surface support facilities are served by separate heating, ventilation, and air-conditioning systems:

- The Support Building
- Main Warehouse/Shops Building
- Water Pump House
- Guard and Security Building
- Maintenance Shop
- Compressor Building (exhaust fans only)
- Safety and Emergency Services Building
- Engineering Building
- Training Building

The design of the surface support facilities HVAC systems provides for:

- Regulating temperature for the comfort of personnel and satisfactory operation of equipment
- Filtering the air supply for personnel
- Maintaining building spaces at slightly positive pressures with respect to the outside, except radioactive materials areas, where negative pressures shall be maintained relative to the outside and to adjacent accessible non-radioactive building spaces
- Confining ventilation air to designed airflow paths for discharge to the atmosphere

- Minimizing the possibility of exhaust air re-circulation by an adequate distance between fresh air supply intakes and exhaust air outlets

The design of the ventilation system for the CMR requires functions to be performed with respect to environmental control for personnel and equipment following a postulated accident, such as a fire or radioactivity release. The CMR system is manually switched to the backup power supply to ensure operation monitoring, and control of the HVAC systems if the normal power supply is lost.

In addition, the independent CMR HVAC system provides for:

- 100 percent equipment redundancy (except duct work)
- Make-up air being processed through HEPA filters in the event of a airborne high radioactivity signal
- Static pressure controls to regulate the amount of outside air that may be drawn into the system through the HEPA filters before it is supplied to the CMR permitting occupancy.

Safety Considerations and Controls - The HVAC systems for these surface support facilities, with the exception of the CMR, are not required to perform functions that are essential to safety. Fan motor interlocks, dampers, temperature indicators, filter pressure differential alarms, and other required instrumentation and controls are provided.

CMR

The Support Building CMR area HVAC system serves the computer room, CMR and associated vestibule, vault, office, and storage room. Equipment redundancy is provided for the following: supply air handler, air cooled condensing unit, and exhaust fan.

The HVAC system provides a suitable environment for continual personnel occupancy, and equipment integrity under normal and emergency conditions and maintain a slightly positive pressure in the CMR. Air passes through at least a two-stage filtration system before it enters the above listed areas.

Major Components and Operating Characteristics - Major components of this HVAC system consist of supply air handling units (containing fans, direct expansion cooling coils, and filters), air cooled condensing units, duct heaters, exhaust-return fans, booster fans, HEPA filter units, dampers, instrumentation, and controls.

The schematic airflow diagram for the CMR area HVAC system is shown in Figure 4.4-5. The CMR area is served by two 100 percent capacity air-conditioning units. One in service and one in standby status. The standby unit will automatically start in the event the operating unit fails.

Under normal operating conditions (re-circulation mode), outside makeup air and return air are filtered by a two-stage air filter system. The first stage of filtration consists of nominal 2 in (5 cm) thick low efficiency filters and the second stage consists of high efficiency filters rated at 85 percent efficiency (atmospheric dust) by ASHRAE Standard 52-76.[7] After the second stage of filtration, the air supply temperatures are thermostatically controlled, as necessary to maintain designed temperatures. The filtered and conditioned air supply is distributed to the various rooms within the CMR area by means of duct work and air outlets.

Safety Considerations and Controls - The main function of the HVAC system is to provide a suitable environment enabling the CMR area to be occupied under normal and emergency operating conditions including the prevention of airborne radioactive contaminants entering the supply systems.

A backup air conditioning system (air handler, air cooled condensing unit, and exhaust fan) is available to automatically start in the event an operating component fails. The supply and exhaust air handling systems are capable of being manually connected to the backup power system for operation during a loss of off-site power.

Locally-mounted instruments are provided for monitoring the HVAC system and filter, pressure drop is monitored and alarmed, locally and in the CMR.

The supply and return exhaust fans are electrically interlocked, to maintain the designed airflow pattern, and the entire HVAC system is interlocked with the fire protection system.

4.4.3.3 Subsurface Facilities Ventilation System

The subsurface ventilation system serves all underground facilities and provides confinement of radioactivity, acceptable working conditions, and a life-sustaining environment during normal operational occurrences and postulated waste handling accidents. Operation of diesel equipment in the underground repository is limited to the available airflow in the area.

Subsurface ventilation is divided into four independent flow paths on the disposal horizon supporting the waste disposal area, the mining area, north area, and the waste shaft and waste shaft station area. The waste disposal, and mining and underground shop areas receive their air supply from common sources (see Figure 4.4-6) (the AIS and the SH shaft) and are independent of each other after the initial distribution/split is made. The waste shaft station receives its air supply from the waste shaft and is kept completely isolated from the other three. All four air circuits combine near the exhaust shaft, which acts as the common discharge from the system.

All bulkheads and ventilation controllers used to maintain the integrity of the underground ventilation circuits are made of fire resistant material, and can support the maximum pressure differential that could occur under normal operating conditions. These structures are designed, installed, and maintained in such a manner that they can accommodate the ground deformation (salt creep) occurring in the underground.

One of three filtration surface exhaust fans is capable of being connected to the backup power supply (one at a time) in the event that normal power is lost. Changeover to backup power is manual. The ventilation system is instrumented to provide for verification of proper system function.

The design and operation of the underground ventilation system meets or exceeds the criteria specified by 30 CFR 57 [8] and the New Mexico Mine Safety Code for All Mines.[9] The underground mine ventilation is designed to supply sufficient quantities of air to all areas of the repository. During normal operating mode (simultaneous mining and waste emplacement operations), approximately 140,000 ft^3 (3,962 m^3) per min can be supplied to the panel area. This quantity of air is required to support the numbers and types of diesel equipment that are expected to be in operation in the area, to support the underground personnel working in that area, and to exceed a minimum air velocity of 60 ft (18 m) per min, as specified in the WIPP Ventilation Plan.

Approximately 35,000 ft^3 (990 m^3) per minute will be required in each of three active rooms during operations. This quantity of air is required to support the numbers and types of diesel equipment that are expected to be in operation in the area, to support the underground personnel working in that area, and to exceed a minimum air velocity of 60 ft (18 m) per minute, as specified in the WIPP Ventilation Plan. The remaining rooms in a panel will either be completely filled with waste; be idle, awaiting waste handling operations; or being prepared for waste receipt. The remainder of the air is needed in order to account for air leakage through inactive rooms and support facilities.

Air will be routed into a panel from the intake side. Air is routed through the individual rooms within a panel using underground bulkheads and air regulators. Bulkheads are constructed by erecting framing of rectangular steel tubing and screwing galvanized sheet metal to the framing. Figure 4.4-8 shows a typical bulkhead with an airflow regulator installed. In order to accommodate salt creep, bulkheads use telescoping extensions that are attached to the roof. Bulkheads use either a sheet metal or rubber flashing attached to the salt to provide an effective seal. Flow is also controlled using brattice cloth barricades. These consist of chainlink or other suitable materials fence that is bolted to the salt and covered with brattice cloth; and are used in instances where the only flow control requirement is to block the air temporarily. Ventilation will be maintained only in active rooms within a panel. After all rooms within a panel are filled, the panel will be closed using a closure system described in Section 4.2.3.4.

Once a disposal room is filled and is no longer needed for emplacement activities, it will be barricaded against entry and isolated from the mine ventilation system by constructing chain link/brattice cloth barricades at each end. A brattice cloth air barricade is shown in Figure 4.4-9. There is no requirement for air for these rooms since personnel and/or equipment will not be in these areas.

The ventilation path for the waste disposal side is separated from the mining side by means of air locks, bulkheads, and salt pillars. A pressure differential is maintained between the mining side and the waste disposal side to ensure that any leakage is towards the disposal side. The pressure differential is produced by the surface fans in conjunction with the underground air regulators. Pressure differentials across these bulkheads between the mining and disposal sides (located nearer to the disposal panel) are monitored from the CMR.

The exhaust air is discharged through the exhaust shaft, by the exhaust system, under the following modes of operation:

<u>Normal Mode</u> During normal operation, four different levels of Normal Mode ventilation can be established to provide four different air flow quantities as follows

- Normal Ventilation: Two main exhaust fans operating to provide 425,000 scfm (224 m^3/s) unfiltered.
- Reduced Ventilation: Two filtration fans operating as ventilation fans to provide 60,000 scfm (28.3 m^3/s) each unfiltered.
- Minimum Ventilation: One filtration fan operating as a ventilation fan to provide 60,000 scfm (28.3 m^3/s) unfiltered.
- Maintenance Ventilation: Simultaneous operation of one or two main ventilation fans with one or two of the filtration fans in support of flow calibration and maintenance activities.

Filtration Mode - This mode mitigates the consequences of a waste handling accident by providing a HEPA filtered air exhaust path from the waste disposal areas and also reducing the air flow. Manual activation is required if the CMR is notified of an underground occurrence involving the waste packages. This mode may also be activated automatically by the Radiation Monitoring System active waste disposal room exit alpha CAM.

The ventilation system is designed as an exhausting system that maintains the working environment below atmospheric pressure. Schematic diagrams of the underground ventilation system are presented in Figures 4.4-6 and 4.4-7. All underground flows join at the bottom of the Exhaust Shaft before discharge to the atmosphere.

Outside air will be supplied to the mining areas, and the waste disposal areas and the North U/G Shop area through the Air Intake Shaft, the Salt Handling Shaft, and access entries. A relatively small quantity of outside air will flow down the Waste Shaft to ventilate the Waste Shaft station. The ventilation system is designed to operate with the Air Intake Shaft as the primary source of fresh air. In Normal Ventilation Mode, sufficient air will be available to simultaneously conduct all underground operations (e.g., waste handling, mining, and support).

If the nominal flow of 425,000 scfm (224 m^3/s) is not available, underground operations may proceed, but the number of activities that can be performed in parallel may be limited depending on the quantity of air available. Ventilation may also be achieved by operating one main fan (Alternate Ventilation Mode), or either one or two of the filtration fans (Minimum and Reduced modes respectively). To accomplish this, the isolation dampers will be opened, which will permit air to flow from the main exhaust duct to the filter outlet plenum. The filtration fans may also be operated to bypass the HEPA plenum. The isolation dampers of the filtration exhaust fan(s) to be employed will be opened, and the selected fan(s) will be switched on. ln this mode, underground operations will be limited.

Shift from normal flow to Filtration mode has been tested and it was demonstrated that a reverse pressure pulse was generated upon closure of the main exhaust fan inlet dampers. This reverse pressure pulse results in reverse flow temporarily in select portions of the underground system. Testing has further demonstrated that the reverse pressure/flow phenomena is greatly lessened if main fan coast down is allowed for a period of time prior to isolation. Modifications have been made that cause the main fan isolation dampers to close slowly, when the main exhaust fans are shut down, to minimize any pressure pulse back through the system.

In the filtration mode, the exhaust air will pass through two identical filter assemblies, with only one of the three EFB filtration fans operating (all other fans are stopped). This system provides a means for removing the airborne particulates that may contain radioactive and hazardous waste contaminants in the reduced exhaust flow before the air is discharged through the exhaust stack to the atmosphere. The filtration mode is activated either manually or automatically if the radiation monitoring system detects abnormally high concentrations of airborne radioactive particulates. Shifting of the exhaust system to the filtration mode can be accomplished manually, either locally at the Exhaust Filtration Building, or by the CMR operator. A Hi-Hi alarm condition from a Radiation Monitoring System active waste disposal room CAM will cause an automatic shift of the mine exhaust air from unfiltered to filtered mode, System Design Description SDD-RM00.[10] The reduced exhaust flow is diverted to the HEPA filters by isolation and diversion dampers on the exhaust fans and duct work preventing unfiltered flow escaping to the atmosphere. The filtration mode is not initiated by the release of gases such as VOCs.

Provisions are included for detecting airborne radioactive contaminants in the waste disposal areas, in the waste shaft and station, and in the discharge to the surface exhaust vent.

Major Components and Operating Characteristics - The ventilation system consists of six centrifugal exhaust fans (three in the normal flow path and three in the filtration flow path), two identical HEPA filter assemblies arranged in parallel, isolation and back draft dampers, filter bypass arrangement, and associated duct work. Operation of the underground ventilation system is detailed in the WIPP procedure WP 04-VU1608.[11]

The six fans are divided into two groups. One group consists of three fans, which are used during normal operation to provide an underground flow of 425,000 scfm (224 m^3/s), and are located near the exhaust shaft. One main fan can be operated to provide 260,000 scfm (123 m^3/s). The remaining three fans, rated at 60,000 scfm (28.3 m^3/s) each, are located at the EFB and are capable of being used during the filtered mode of operation. This mode of operation requires the use of only one of the three fans at any given time with all other fans stopped and isolated. Two of the three filter mode fans can also be operated (with the HEPA system bypassed) to provide other underground ventilation requirements, when needed.

Each filter assembly consists of two banks of prefilters and two banks of HEPA filters arranged in series; and, each assembly will handle 50 percent of the filtered mode airflow (30,000 cfm each [849.5 m^3/m]).

Any one of the three EFB fans is capable of delivering 100 percent of the design 60,000 scfm flow rate with all filters at their maximum pressure drop. Fan failure is monitored by a flow sensing device on the fan's discharge side, and alarms in the CMR.

Safety Considerations and Controls - The operating status of the exhaust fans and the airborne contamination level of the effluent discharged are displayed in the CMR. Provides a means to switch to filtration.

An alarm for excessive pressure drop across the filters is actuated at a predetermined level. Filter differential pressure is displayed locally and in the CMR.

Instruments and system components are accessible for periodic testing and inspection during normal plant operation. Under normal operating conditions, the ventilation system functions continuously.

4.4.3.3.1 Natural Ventilation Pressure

The air flow in the underground is normally driven by the negative pressure induced by the exhaust fans. There can be a second pressure resulting from the difference in density between the air entering and leaving the repository which can influence airflow. This phenomenon is called the natural ventilation pressure (NVP). It is experienced on days when outside temperatures are either very hot or very cold.

4.4.3.3.2 Hot Weather NVP

During hot weather, the air going down to the underground is warmer and less dense (lighter) than the air returning from the underground. This lighter air has a natural tendency to resist being drawn down into the repository (hot air rises). Hence in hot weather there is a (negative) NVP which opposes the fan pressure. This reduces the flow down the AIS and SH shaft. It also reduces the differential pressures between the waste shaft station, waste disposal area, and the other areas. The air in the waste shaft will be cooler than that in the AIS and SH shaft, which further reduces the waste shaft station to W30 differential pressure. (See Figure 4.1-3 for U/G locations).

Under ordinary operating conditions, the pressure in W30 is higher (less negative) than that in the waste shaft station (S400). On very hot days (exceeding 100° F [37.8° C]) the reduction of this differential pressure caused by the negative NVP can result in the pressure in S400 being higher than in W30. Without corrective actions, this would allow airflow from the CA area into a non-CA area.

4.4.3.3.3 Cold Weather NVP

During cold weather, the air going down to the underground is colder and denser (heavier) than the air returning from the underground. This denser air has a natural tendency to sink down the AIS and SH shaft (cold air sinks). In cold weather there is a positive NVP which augments the fan pressure. This increases the airflow down the intake shafts, reduces the fan suction pressure (constant flow control) and increases the differential pressure between the waste shaft station, waste disposal area, and the other areas.

The WIPP mine ventilation system is designed for intake air to downcast in the AIS, SH shaft, and waste shaft. The system pressure required to induce those down drafts is supplied by the surface fans. On extreme cold weather days, a portion of the air entering the repository through the AIS and SH shaft may be the result of a positive NVP. This air is entering the repository without the aid of the mechanical fans. The fans in turn reduce their operating pressure because they are receiving a sufficient and constant volume of air. Upcasting of the air in the waste shaft can occur if the situation is not corrected.

The air feeding the waste shaft comes primarily from the auxiliary air intake tunnel, partly from leakage into the waste hoist tower, and partly from the WHB. The result is that the air feeding the waste shaft tends to be warmer than the surface air feeding the AIS. The reduction in fan pressure, coupled with the warmer air in the waste shaft is only under alternate, reduced, and minimum ventilation modes.

Administrative action is required to adjust the underground ventilation configuration to avoid reverse flow in the waste shaft. There are several alternatives which can be performed concurrently to prevent or correct this problem should it occur. They include:

- Start second main exhaust fan (normal ventilation).
- Open the regulator to the waste shaft station.
- Cover the AIS and/or the SH shaft on the surface.
- Close the regulators to the mining, waste disposal and experimental areas.

A pressure chamber has been constructed on the west side of the waste shaft station to ensure that leakage from the CA side into the non-CA area does not occur. The pressure chamber is manually activated whenever waste handling is occurring in the waste shaft and/or waste shaft station, and differential pressure between S400 and W30 is low. The chamber is pressurized by six high pressure fans. The fans are operated in various combinations to provide the airflow necessary to maintain the pressure buffer. As a secondary backup system, pressure will be supplied by an actuated valve on a plant air pressurized line. The valve will be controlled by a Foxboro controller to regulate the flow of air into the chamber and maintain pressure differentials. The pressure inside the chamber is monitored to ensure that it is sufficient to prevent airflow reversal even if the differential pressure from S400 to W30 (which is also monitored) is in the wrong direction or positive NVP is sufficient to cause waste shaft reversal.

References for Section 4.4

1. DOE Order 6430.1A, General Design Criteria, April 1989 (For reference only, superceded by DOE O 420.1 and DOE O430.1A).

2. DOE O 420.1, Facility Safety (superceded 6430.1A).

3. DOE Order 5400.5, Radiation Protection of the Public and the Environment, June 1990. (Latest is Change 2, January 1993).

4. Energy Research and Development Administration, 76-21.

5. WP 04-ED1341, Surface Backup Power Distribution.

6. ANSI N510, American National Standards Institute, Standard for Testing of Nuclear Air Cleaning Systems.

7. ASHRAE, Method of Testing Air Cleaning Devices Used in General Ventilation for Removing Particulate Matter, 52-76.

8. 30 CFR 57, Safety and Health Standards - Underground Metal and Nonmetal Mines, 8th edition, 1994.

9. New Mexico Mine Safety Code for All Mines, 1990.

10. SDD-RM00, Radiation Monitoring System.

11. WP 04-VU1608, Underground Ventilation and Filtration System Operation

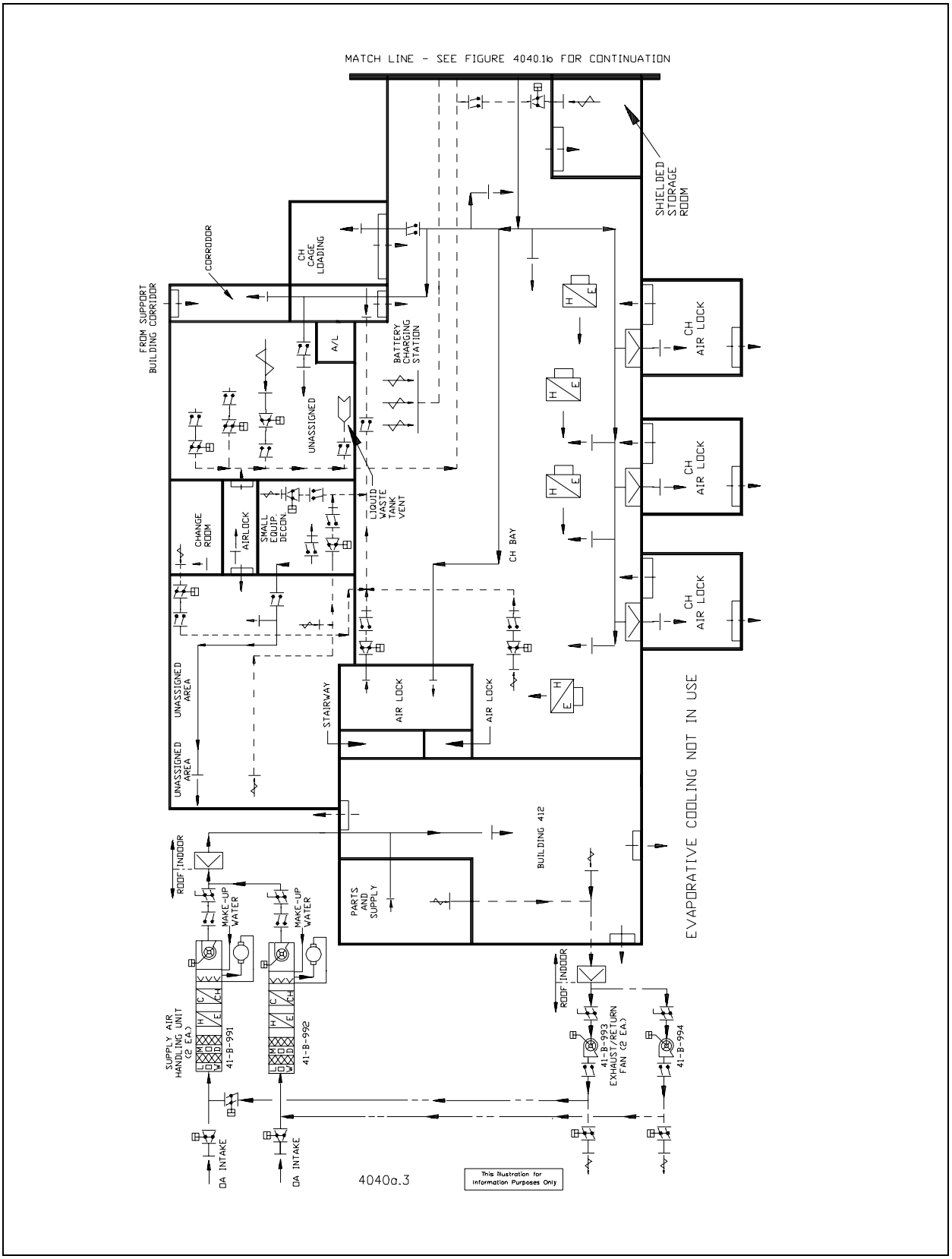

Figure 4.4-1a WHB and TRUPACT Maintenance Facility

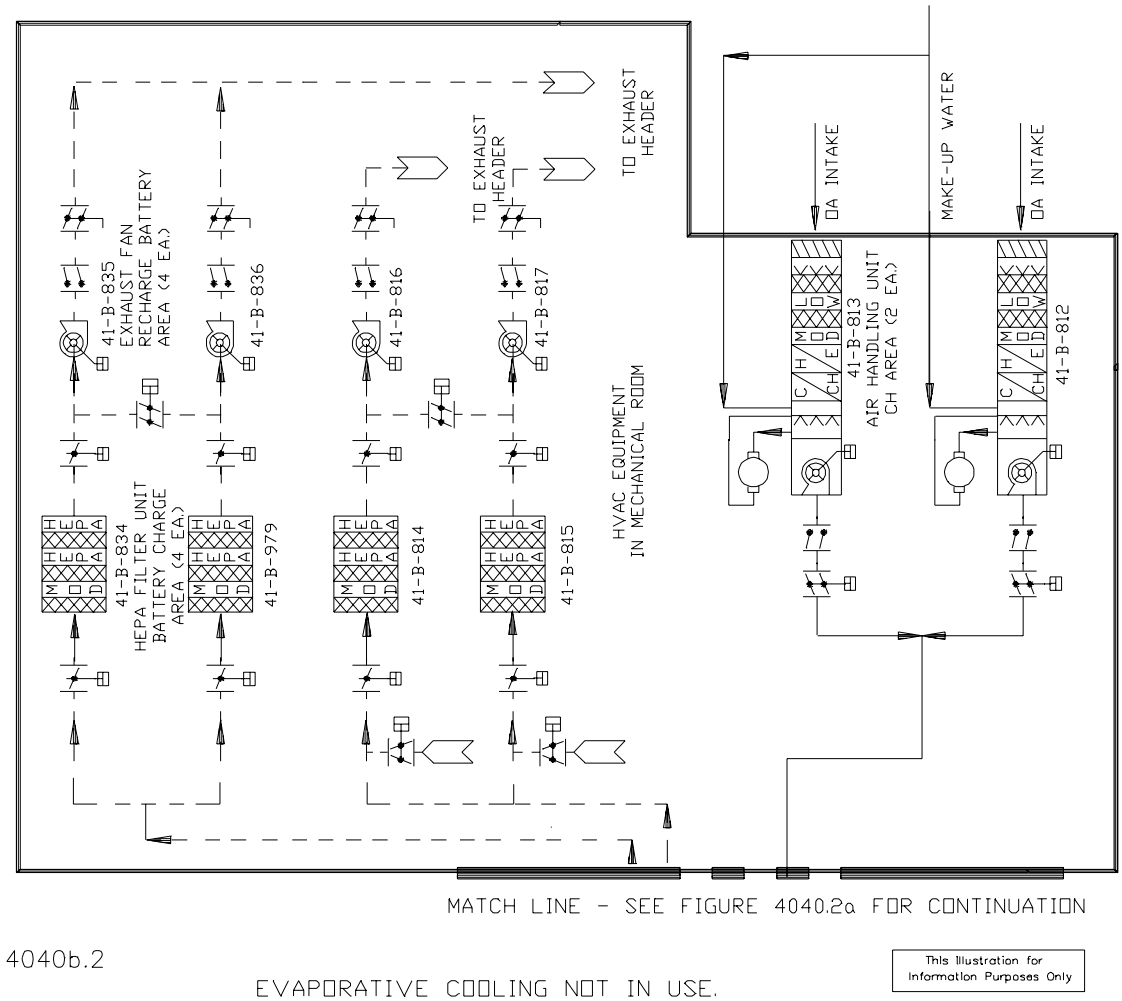

Figure 4.4-1b Waste Handling Building

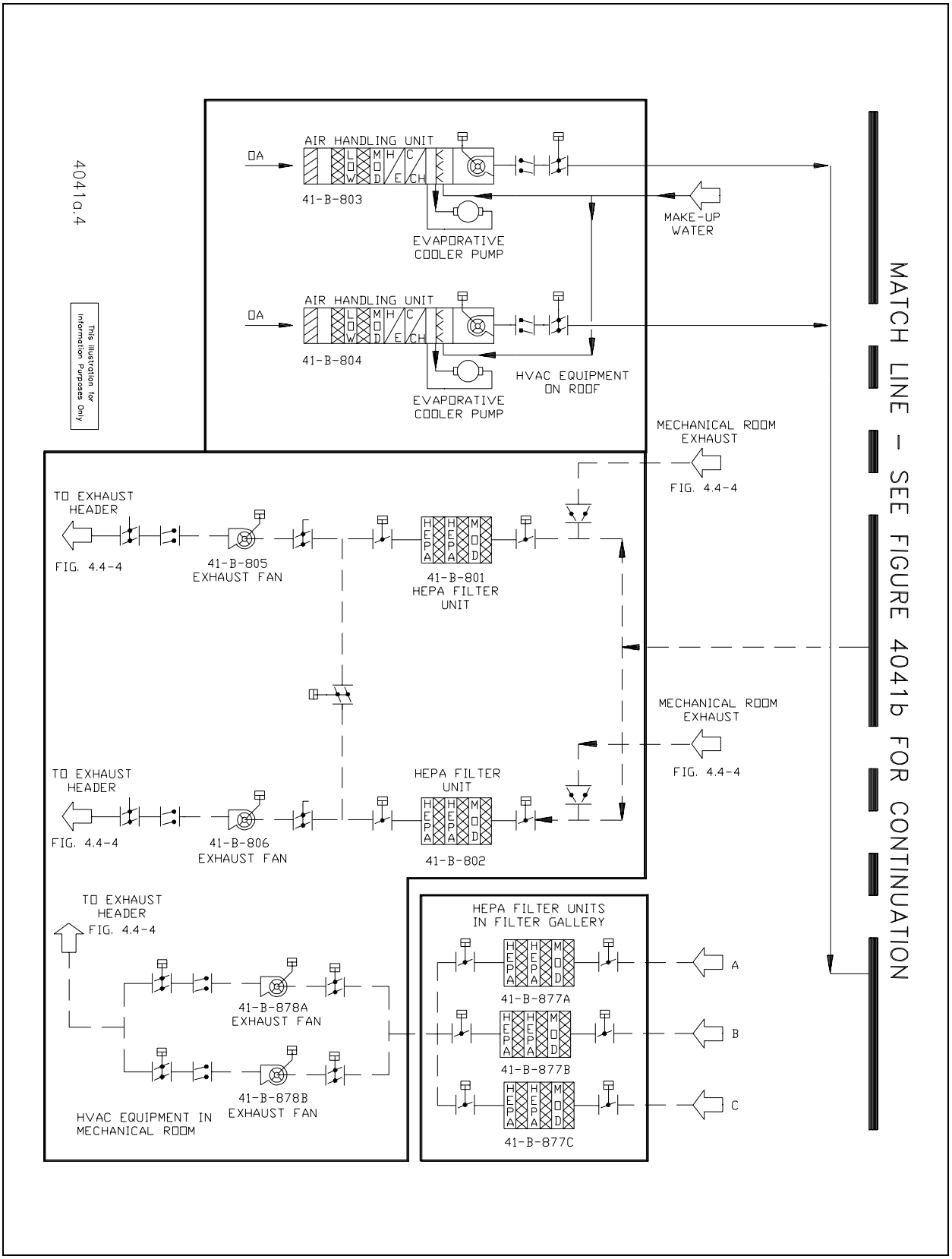

Figure 4.4-2a WHB RH Handling HVAC Flow Diagram

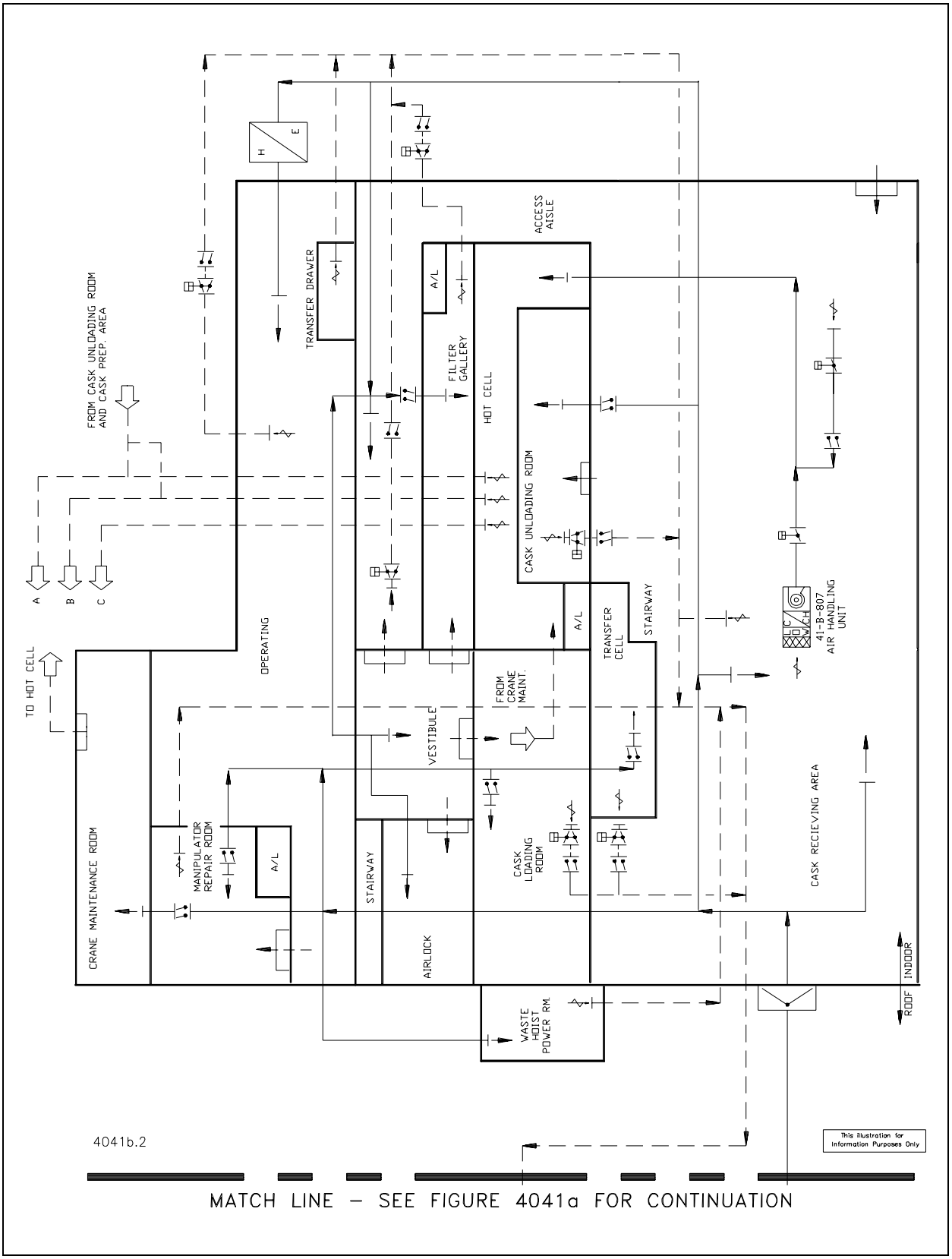

Figure 4.4-2b WHB RH Handling HVAC Flow Diagram

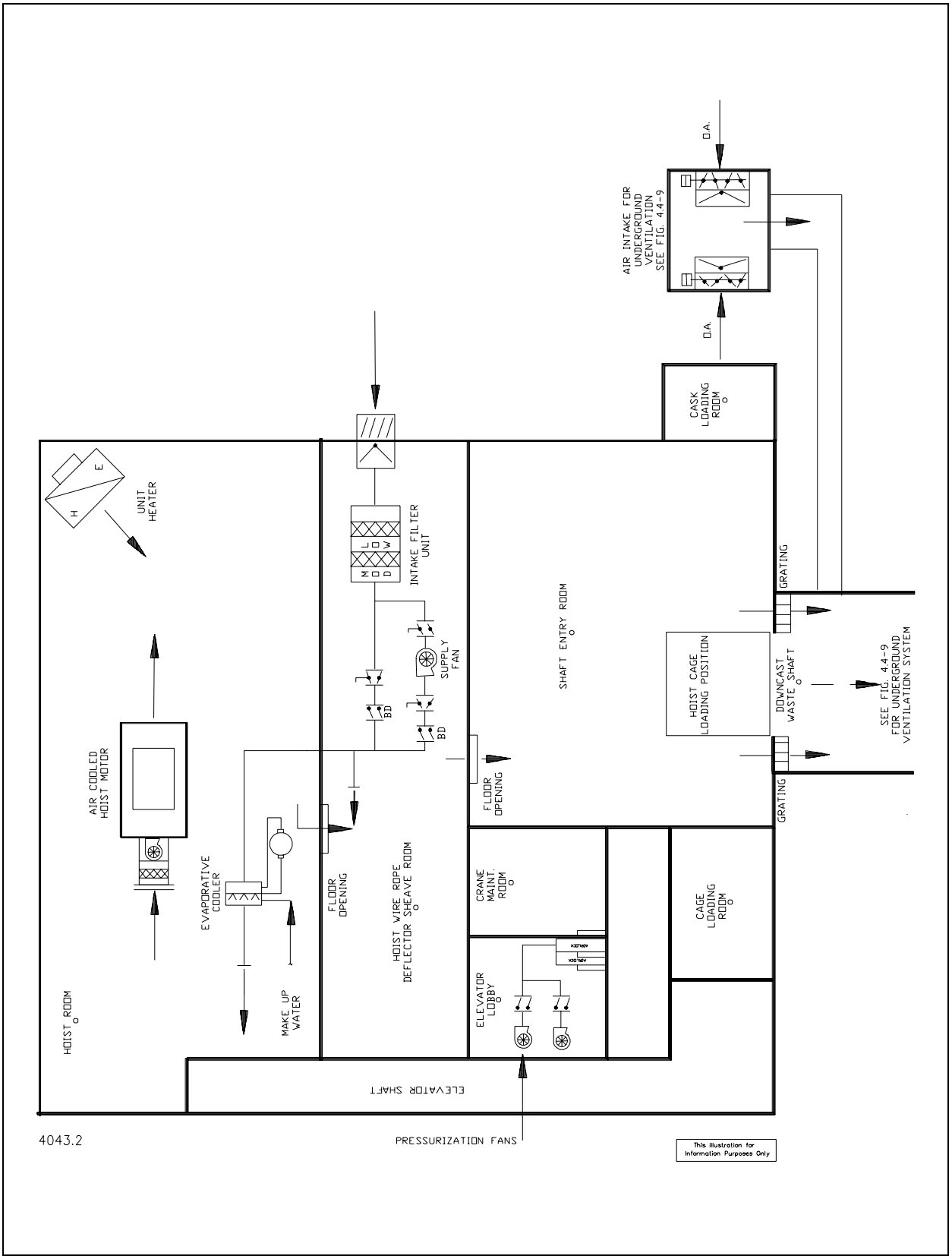

Figure 4.4-3 Waste Handling Shaft/Hoist Tower HVAC System Flow Diagram

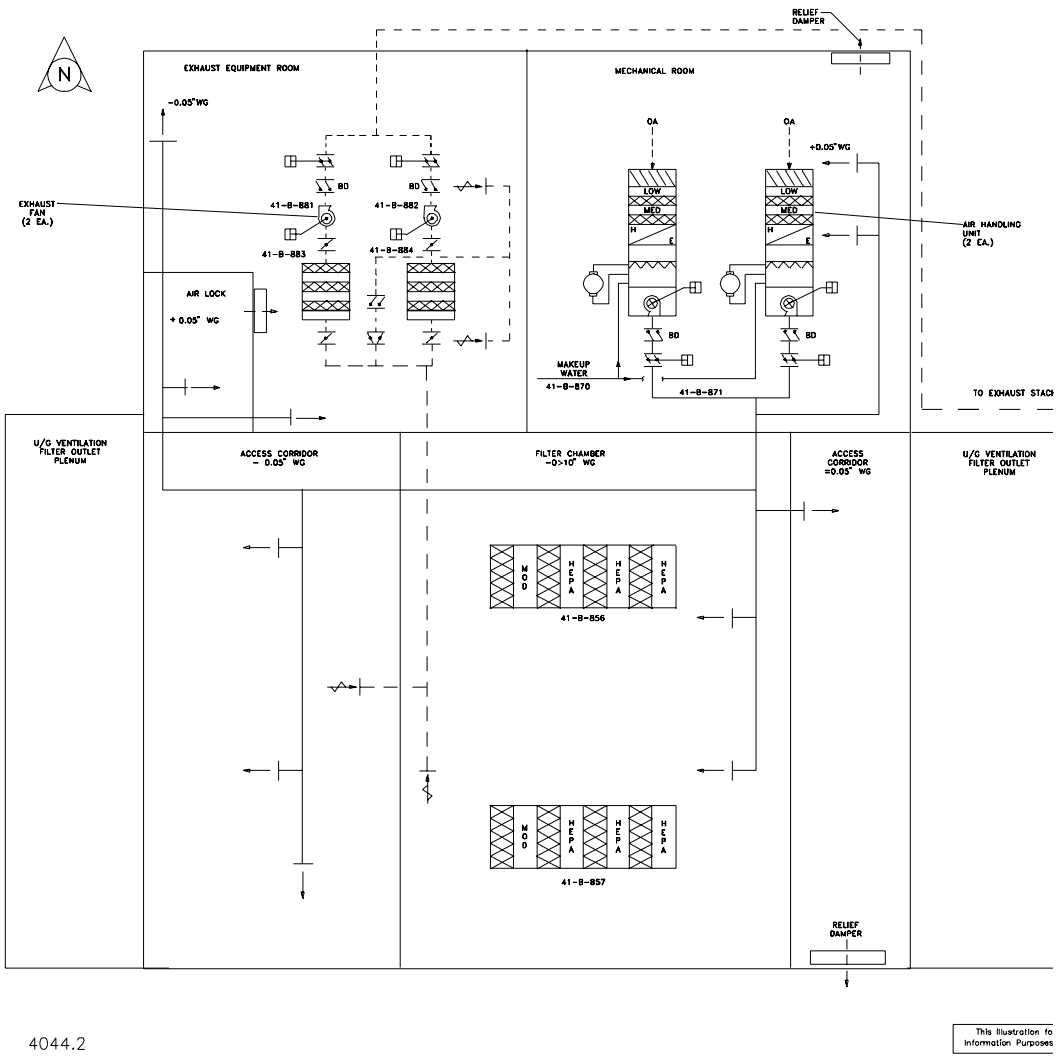

Figure 4.4-4 Exhaust Filter Building HVAC Flow Diagram

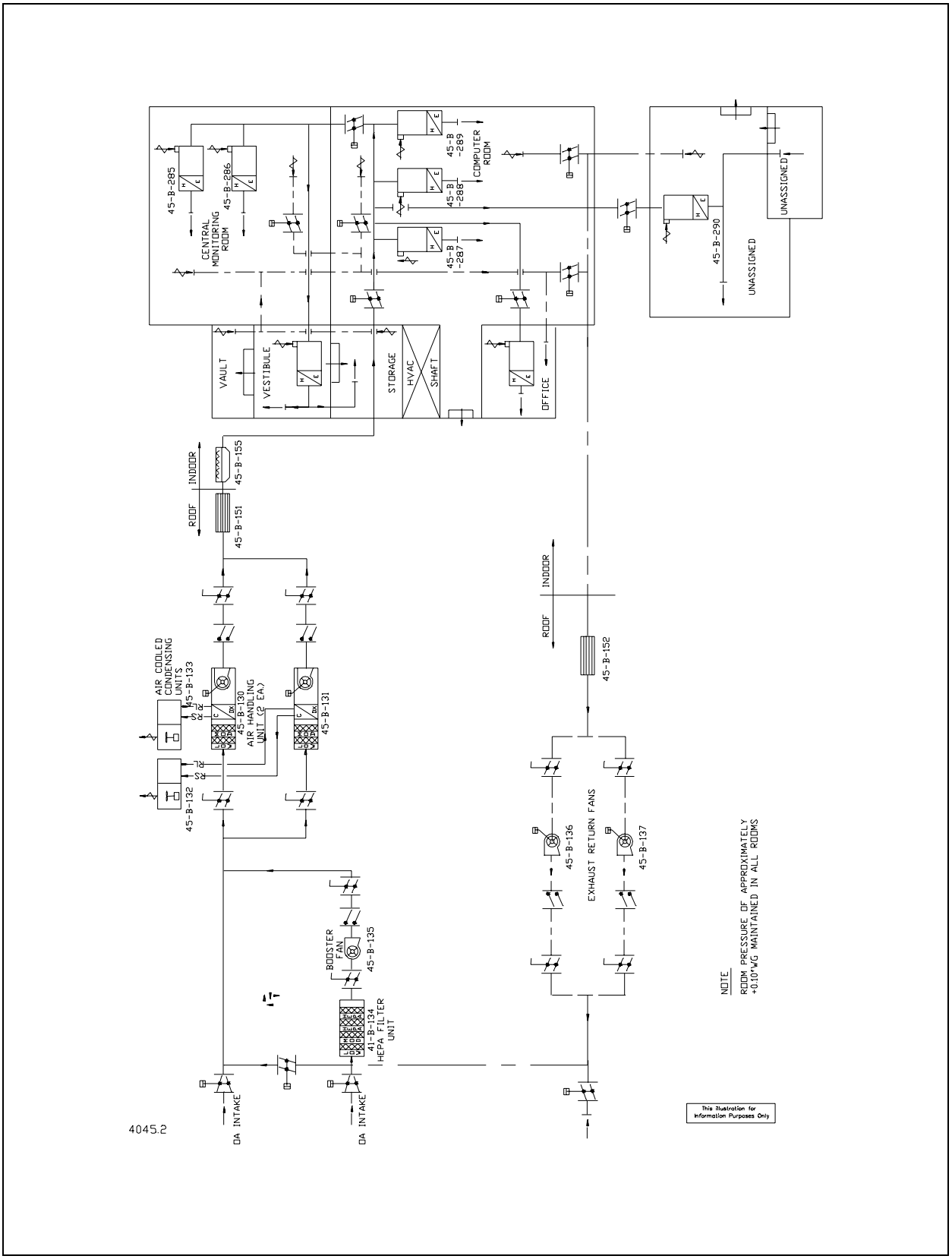

Figure 4.4-5 Support Building CMR Area HVAC Flow Diagram

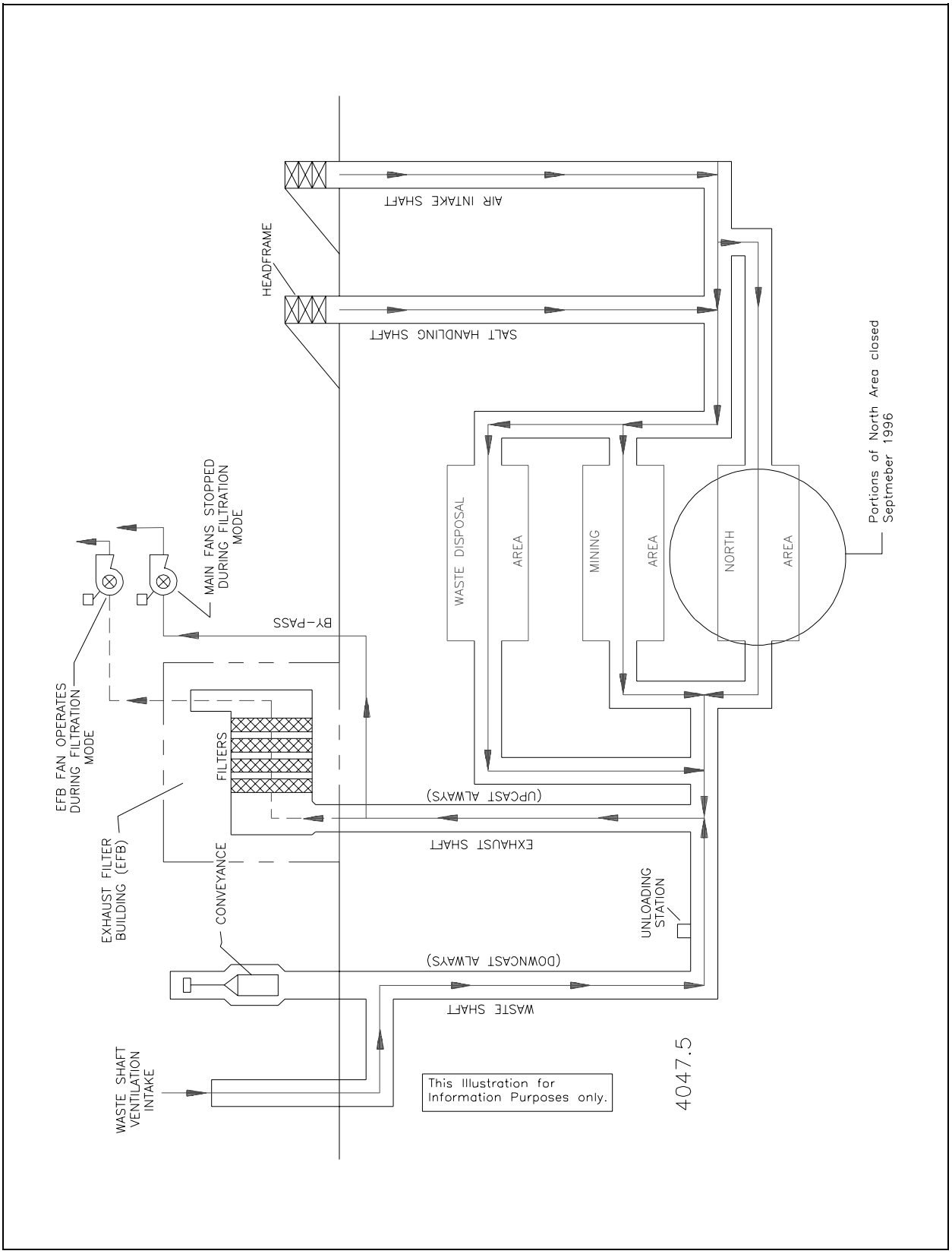

Figure 4.4-6 Underground Ventilation Air Flow Diagram

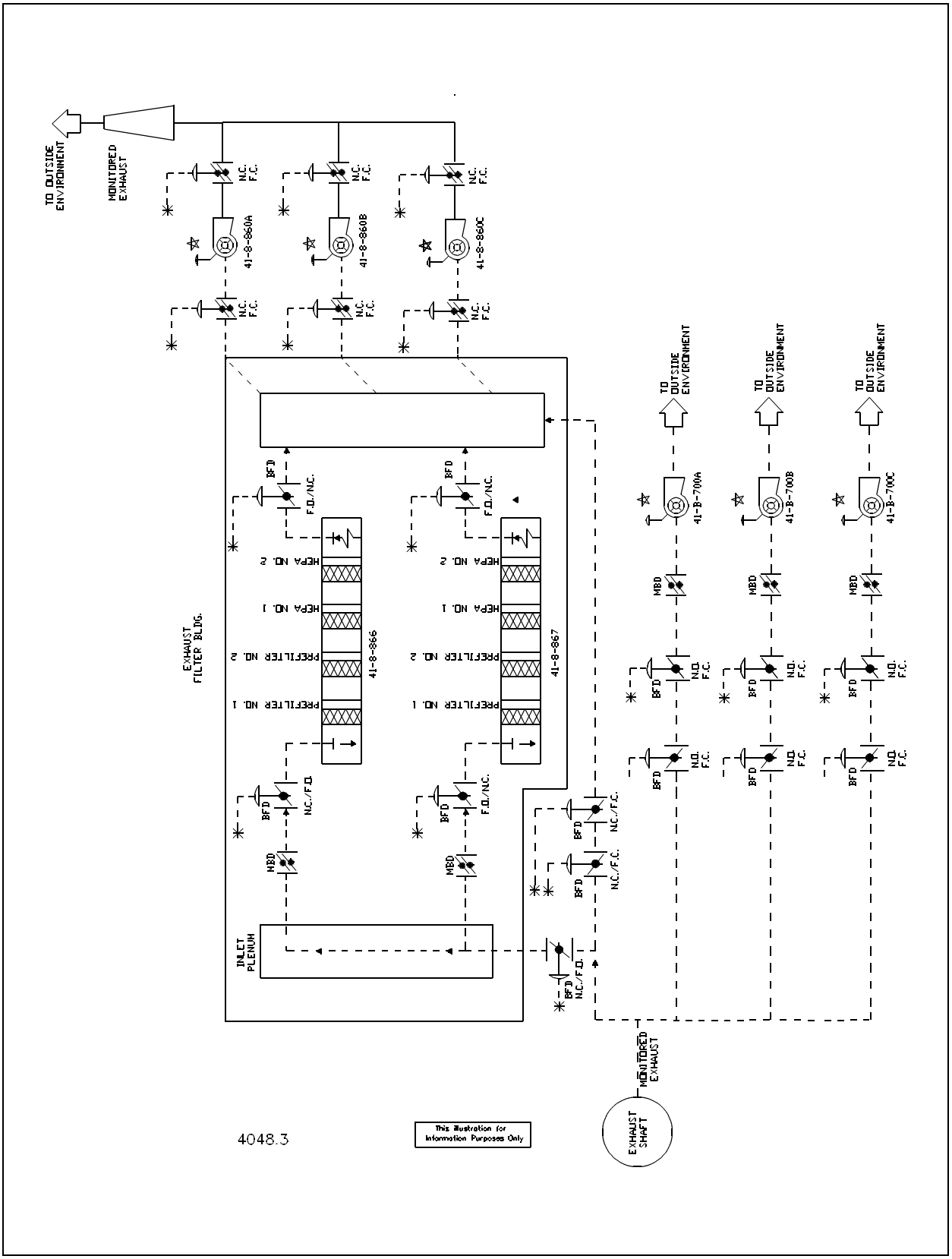

Figure 4.4-7 Main Fan and Exhaust Filter System Schematic

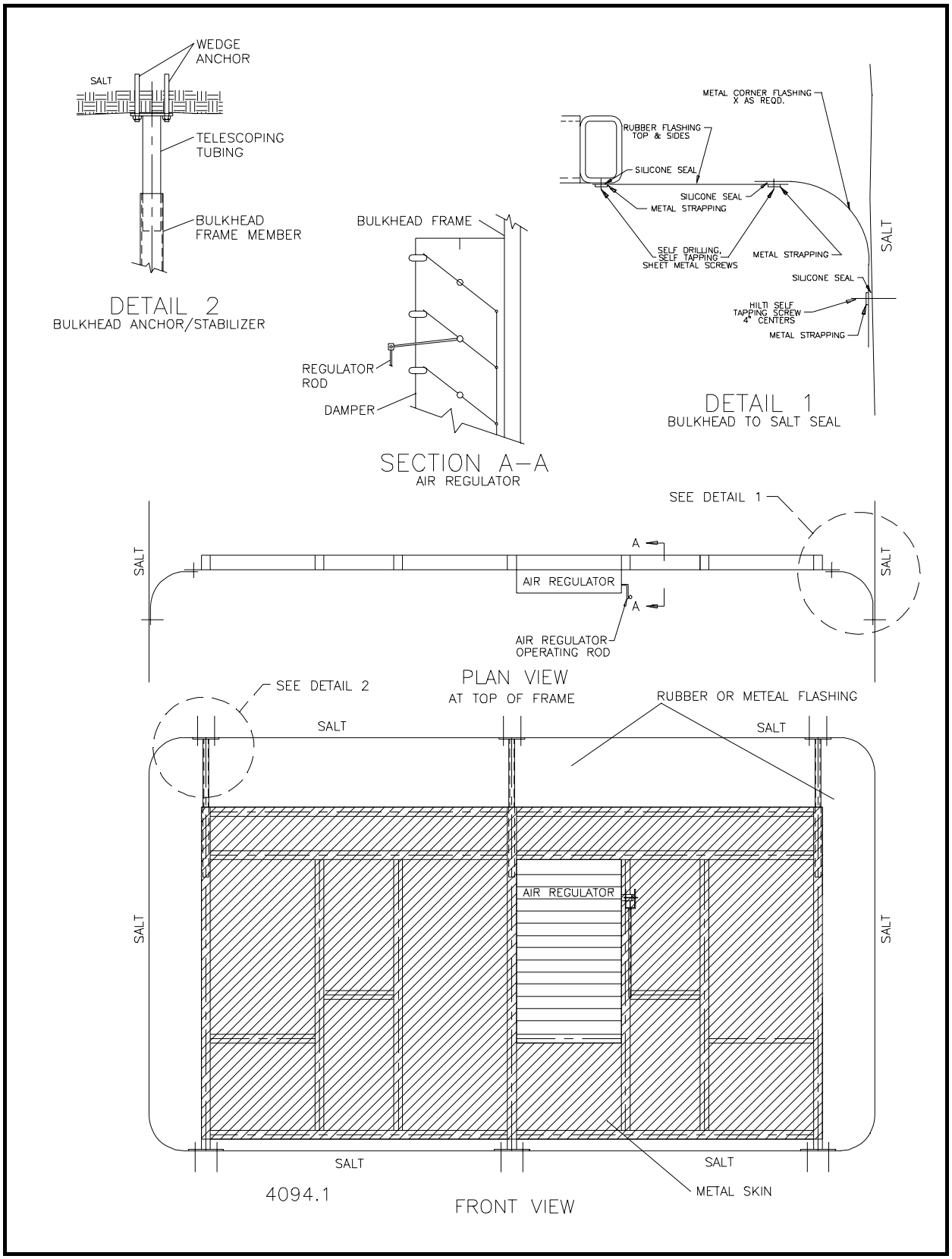

Figure 4.4-8 Typical Bulkhead Design and Components

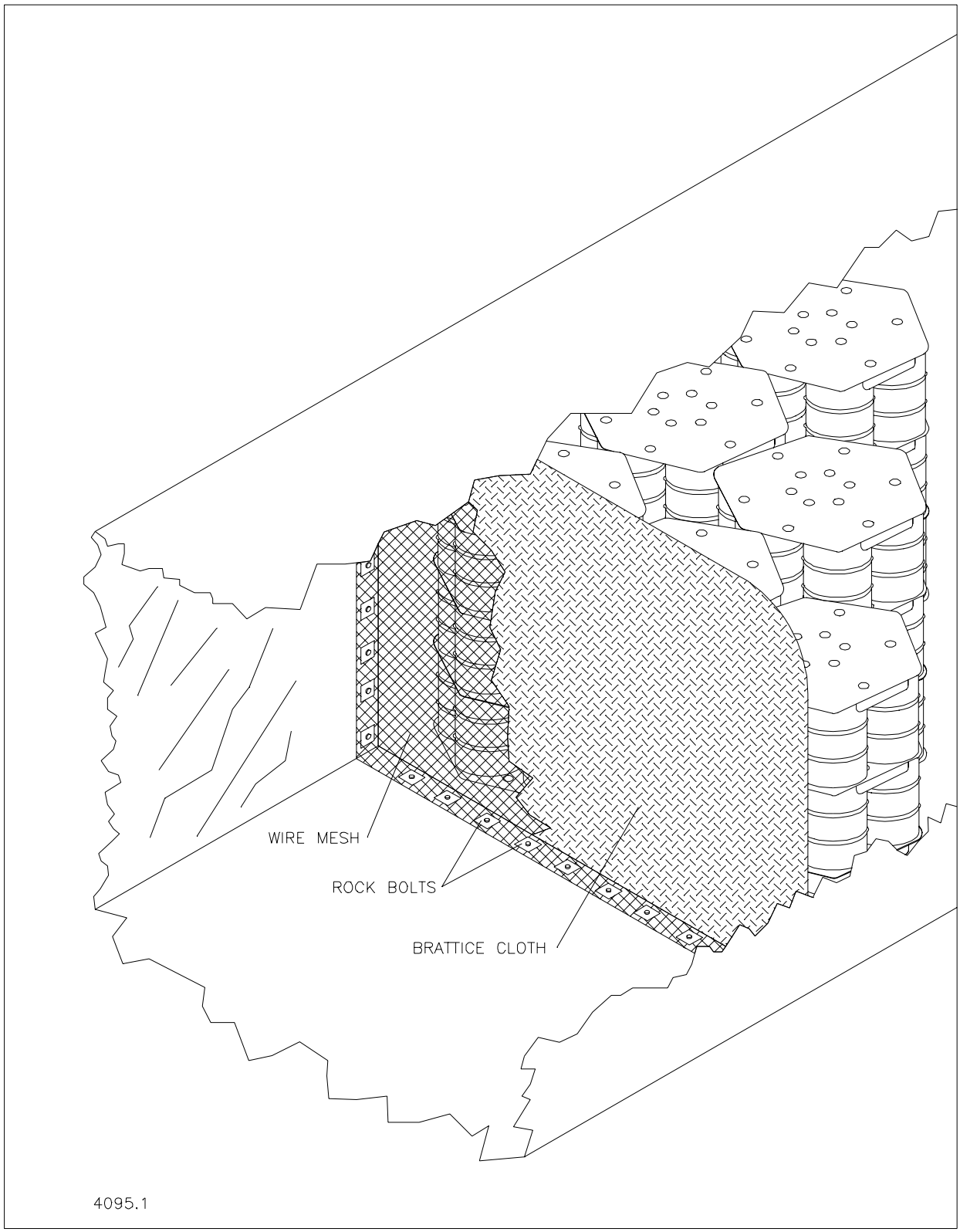

Figure 4.4-9 Typical Room Barricade

4.5 Safety Support Systems

4.5.1 Fire Protection System

The WIPP fire protection system is designed to ensure personnel safety, mission continuity, and property conservation. Building designs incorporate features for fire prevention (e.g., control and extinguishment) Also, fire hazards are controlled throughout the WIPP. The plant design meets the "improved risk" level of protection defined in DOE O 420.1[1] and satisfies the applicable sections of the National Fire Protection Association codes, DOE Orders, and federal codes to the extent described in DOE/WIPP-3217, WIPP Fire Hazard Analysis Report.[2]

To meet these objectives, the WIPP facility design incorporates the following features:

- Most buildings and their support structures are protected by fixed, automatic fire suppression systems designed to the specific, individual hazards of each area.
- Noncombustible construction, fireproof masonry construction, and fire resistant materials are used whenever possible.
- Fire separations are installed where required because of different occupancies per the Uniform Building Code (UBC).
- In buildings where compartmentalization is required, vertical openings are protected by enclosing stairways, elevators, pipeways, electrical penetrations, etc., to prevent fire from spreading to upper floors.

The exhaust ventilation systems which remove hot fire gases, toxic contaminants, explosive gases, and smoke are designed with a high fire integrity. The subsurface and surface structures are served by these systems.

The components of the electric service and distribution systems are listed by Underwriters' Laboratory, or approved by Factory Mutual Engineering Corporation, and are installed to minimize possible ignition of combustible material and maximize safety.

Adequate provisions for the safe exit of personnel are available for all potential fire occurrences with evacuation alarm signals provided throughout occupied areas.

Building evacuation plans help ensure the safe evacuation of building occupants during emergency conditions. The WIPP Emergency Management Program[3] contains the underground emergency procedures, the underground evacuation routes, and the designated assembly areas.

The WIPP Fire Protection System consists of four subsystems. They are:

- Fire Water Supply and Distribution System
- Fire Suppression System
- Fire Detection and Alarm System
- Radio Fire Alarm Reporter (FAR) System

All fire protection systems are classified as Design Class IIIB.

4.5.1.1 Fire Water Supply and Distribution System

The Fire Water Supply and Distribution System consists of two fire pumps, a pressure maintenance (jockey) pump, and a compound loop yard distribution system. One fire pump is electric motor driven and the other pump is diesel engine driven. Both pumps are rated for 1,500 gal (5678 L) per minute at 125 psi (8.8 kg/cm^2). The system is required to provide fire water at a rate of 1,500 gal (5678 L) per minute for two hours for a total of 180,000 gal (681,354 L).

The Fire Water Supply System receives its normal water supply from one of two on-site 180,000 gal (681,354 L) ground-level storage tanks, which are part of the Water Distribution System. The second tank supplies water to the Domestic/Utility Water System, which is a separate system from the Fire Water Supply System, and also reserves approximately 100,000 gal (378,540 L) of water for use as fire water. Utilization of the water in the second tank by the Fire Water Supply System is achieved by the installation of a suction piping spool piece.

Operation of the two fire pumps and the jockey pump is controlled by changes in the distribution system pressure. The pumps are arranged for sequential operation. Under normal conditions, the jockey pump operates to maintain the designed system static pressure. Should there be a demand for fire water which exceeds the capacity of the jockey pump, system pressure will drop and the electric fire pump will start. If system pressure continues to drop, the diesel pump will start.

The yard distribution system consists of a compound loop arrangement serving all areas of the site. The system supplies fire water to all facilities containing a sprinkler system. In addition, the system supplies fire hydrants, which are located at approximately 300 ft (91 m) intervals throughout the site. The system contains numerous sectionalizing and control valves, which are locked, sealed, and visually checked monthly.

All major components of the Fire Water Supply and Distribution System are UL- listed and FM-approved.

4.5.1.2 Fire Suppression System/Fire Detection and Alarm System

The fire suppression system consists of several different fire extinguishing systems or equipment that service the surface buildings and facilities and the underground areas. These may include any one or more of the following fire extinguishing capabilities: automatic wet pipe sprinkler system, fire hose connections, automatic dry chemical extinguishing system, and portable fire extinguishers. The automatic wet pipe sprinkler system is the primary suppression system for fire protection at the WIPP. The fire detection and alarm system consists of multiple systems, each utilizing most or all of the following components: heat sensing fire detectors, smoke detectors, sprinkler system water flow alarm devices, manual fire alarm systems, control panels, audible warning devices, and visual warning devices. A complete description of the type of fire suppression system provided at each WIPP surface structure and the underground is provided in the WIPP Fire Hazard Analysis Report.[2]

4.5.1.3 Radio Fire Alarm Reporter System

The radio fire alarm reporter (FAR) system provides notification of fire alarm and trouble signals to the CMR for structures not connected to the CMS local processing units and for structures which could have significant program or monetary impact. This system consists of radio transmitters that relay alarm and trouble signals via an FM signal to a central base station/receiver. The signal is displayed in the CMR.

4.5.1.4 Fire Protection System Design, Installation, Testing and Maintenance

The following NFPA [4] standards apply at the WIPP facility:

- The fire water supply and distribution system (pumps and hydrants) are designed, installed, tested, and maintained according to NFPA [4] 20, NFPA [4] 24, and NFPA [4] 25.
- The automatic wet pipe sprinkler systems are designed, installed, tested, and maintained in accordance with NFPA [4]13 and NFPA [4]25.
- The dry chemical fire suppression systems are designed, installed, tested and maintained in accordance with NFPA [4] 17.
- The fire detection and alarm systems are designed, installed, tested, and maintained in accordance with NFPA [4] 72.
- The radio fire alarm reporter system is designed, installed, tested, and maintained in accordance with NFPA [4] 72 and NFPA [4] 1221.

4.5.2 Plant Monitoring and Communications Systems

The plant monitoring and communications systems include on-site and plant to off-site coverage. The systems are designed to provide immediate instructions to facility personnel to assure personnel and WIPP facility safety, WIPP facility security, and efficient WIPP facility operations under normal and emergency conditions.

Plant Monitoring and Communications includes the following systems:

- Central monitoring system
- Plant communications
  - Touch tone phones
  - Mine pager phones
  - Plant PA (including the Site Notification System) and alarm systems
  - Radio

4.5.2.1 Central Monitoring System

The CMR is the central location for the collection and monitoring of real time site data, automatically and manually, during normal and emergency conditions. The CMR was not intended to be designed or operated in a manner similar to the control room of a nuclear power plant. Most of the underground and surface data monitored in the CMR is gathered, processed, stored, logged, and displayed by the CMS, which collects the data continuously from approximately 1,500 remote sensors.

The CMS is a Design Class IIIA, computer-based monitoring and control system. It is used for real-time site data acquisition, display, storage, alarm and logging and for the control of site components. The CMS monitors the following systems:

- Radiation monitoring, with input from selected area radiation monitoring system (ARMS) detectors, selected continuous air monitoring systems (CAMS), radiation effluent monitoring systems (REMS).
- Electrical power status, including back-up diesel operation.
- Fire alarm system, including system status parameters.
- Ventilation system, including damper position, fan status, flow measurement, and filter differential pressure.
- Meteorological data, including wind speed and direction, temperature, and barometric pressure.
- Facility systems, including air compressors, vacuum pumps, and storage tank levels.

The CMR has three operator stations, including an engineer's station, which display alarms, status, trends, graphics, and interactive operations. The CMS electronic data storage devices are located in the computer room adjacent to the CMR. Operator's stations and an engineer's station are located in the CMR, and the backup operator's stations are located in the security control room, computer room, and underground operations connex (S-550).

The CMR has special features to allow its use during both normal and emergency conditions. These features include two-hour fire walls and redundant ventilation systems, including HEPA filtration of intake air to allow occupancy during radiological releases. The CMR sources of back-up AC electrical power include an uninterruptible power supply (UPS), with a minimum life expectancy of 30 minutes, and the diesel generator (on-site fuel storage capacity is sufficient for the operation on one engine generator at full load for one day) used to power priority loads (including the CMR) as discussed in Section 4.6.

4.5.2.2 Plant Communications

The dial phone system includes a private automatic branch exchange (PABX) network providing conventional on-site and off-site telephone services. Major uses of this subsystem include the reporting of occurrences (DOE O 232.1A)[5] and communications between the CMR and the following:

- Roving operators and instrumentation technicians.
- The Emergency Operations Center (EOC).
- Various departments such as Health Physics, Transportation, and Security.

The mine pager phones make up an independent, hard wired, battery-operated system for two-way communications between the surface and underground operations.

The plant public address (PA) and alarm systems provide for the initiation of surface and underground evacuation alarms and public address announcements from the CMR and local stations. The plant PA and alarm systems includes the site-wide PA and intercom installations, the Site Notification System for remote locations, and an additional underground evacuation alarm system. These alarms are supplied with backup power if the off-site power supply fails. The PA system master control console is located in the CMR, with paging stations located in the Support Building, WHB, water pumphouse, Guard and Security Building, salt handling hoist house and head frame, EFB, safety and emergency services facility, Engineering Building, Warehouse/Shops Building, and underground..

Radio includes two-way and paging on-site and off-site radio systems. These systems include base stations in the CMR, security control room, emergency operations center, and mobile and portable units.

4.5.2.3 Radiation Monitoring System

The Radiation Monitoring System includes five basic subsytems to ensure adequate information on plant radiation for protection of plant personnel and the surrounding environment under normal operation, off-normal events, and recovery from off-normal events. The subsystems are: Continuous Air Monitoring (CAM) System, Fixed Air Sampling (FAS) Systems, Area Radiation Monitoring (ARM) Systems, Radioactive Effluent Air Monitoring (REMS) Systems, and the Plant Vacuum (PV).

The five subsystems are coordinated into a single design package. Signals are provided to the CMR to provide continuous surveillance and display or log alarm status on the CRT or printer for selected CAM, REMS and ARM stationary monitors. Status of the PV system is also available at the CMR.

References for Section 4.5

1. DOE O 420.1, Facility Safety.

2. DOE/WIPP-3217, WIPP Fire Hazard Analysis Report, June 2002.

3. WP 12-9, WIPP Emergency Management Program.

4. National Fire Protection Association Codes and Standards.

5. DOE O 232.1A, Occurrence Reporting and Processing of Operations Information.

4.6 Utility and Auxiliary Systems

4.6.1 Electrical System

Unless otherwise indicated, all electrical system components are Design Class IIIB. The electrical system is designed to provide: normal and backup power to WIPP electrical equipment, grounding for electrically energized equipment and other plant structures, lightning protection for the plant, illumination for the plant surface facility, and for related underground operations.

Standard industrial electrical distribution equipment is used throughout. Equipment used includes medium voltage switchgear buses, medium voltage to low voltage step-down unit substations, motor control centers, small distribution transformers and panels, relay and protection circuitry, station batteries along with associated synchronous inverters, diesel generator sets, and the cabling, enclosures, and other structures required to locate and interconnect these items.

The electrical system is designed to supply power at the following nominal bus voltages:

- 13.8 kVac, nominal, 3-phase, 3-wire, 60-Hz - Power supply for the main plant substation, underground switching stations, and surface and underground unit substation transformers.
- 4.16 kVac, nominal, 3-phase, 3-wire, 60 Hz - Power supply for the main exhaust fan drive motors.
- 2.4 kVac, nominal, 3-phase, 3-wire, 60 Hz - Power supply for the drive motor for the M-G set, which provides the backup supply for the salt handling shaft drive motor.
- 480/277 Vac, nominal, 3-phase, 4-wire, 60 Hz - Power supply for motor control centers, the AIS drive motor, solid state direct current converter systems for the SH and waste hoists, underground filtration fans, lighting and power distribution transformers.
- 120/208 Vac, nominal, 3-phase, 4-wire, 60 Hz - Power supply for control systems, instrumentation, lighting, communication, and small (fractional horsepower) motor-driven equipment.
- 120/208 Vac, nominal, 3-phase, 4 wire, 60 Hz - Uninterruptible power supply (UPS) for control and instrumentation which must be continuously energized under all plant operating modes.

4.6.1.1 Normal Power Source

The WIPP facility normal power is supplied by a public utility company, and is the preferred power source supplying power to the WIPP facility at all times.

The electrical utility company supplies electrical power from their 115 kV Potash /Kerrmac Junction open wire transmission line from the North and Whitten/Jal Substation open wire line from the South. The North line is about 9 mi (14.4 km) long while the South line is about 19 mi (30.5 km) long. The Potash Junction and Whitten Substations each have two feeders from multiple generating stations and loss of one generating source does not interrupt power to the WIPP facility.

The Utility substation at the WIPP facility is located East of the Property Protection Area. Area substations are located at the various surface facilities. Underground conduits, cable duct banks, and buried cables connect the Plant substation with the area substations.

4.6.1.2 Backup Power Source

In case of a loss of utility power, backup power to selected loads can be supplied by either of the two on-site Design Class IIIB 1,100 kW diesel generators. These generators provide reliable 480-V power, and are sized to feed the loads listed in Table 4.6-1. Backup power is fed through buses A and B (Figure 4.6-1). Each of the diesel generators can carry all preselected monitoring loads (see Section 4.6.1.3 for a discussion of essential loads) plus operation of the AIS hoist for personnel evacuation, and other selected loads in accordance with WP 04-ED series Facility Operations procedures.[1]

Upon loss of normal power, the diesel(s) is started manually by the facility operator within 30 minutes using the electric starter/batteries. Only one diesel may be loaded at a time.[2] The starter system is a 24 V battery system with a 300 amp-hour capacity. The diesel generators may be started from the local control panel or from the CMR. Monitoring of the diesel generators and associated breakers is possible at the CMR, thus providing the ability to feed selected facility loads from the backup power source, in sequence, without exceeding generator capacity. The on-site total fuel storage capacity is sufficient for the operation of one engine generator at full load for one day, and additional fuel supplies are readily available within a few hours by tank truck allowing on-line refueling and continued operation.

The diesel generators and the generator load center are located outside between the Safety and Emergency Services Building and EFB. A 480-V backup power indoor switchgear is located in the main electrical room in the Support Building. Area substations are located at various surface facilities.

Operation of backup power supplies and the selection of loads is addressed in the WP 04-ED series Facility Operations procedures.[1]

4.6.1.3 Uninterruptible Power Supply (Essential Loads)

The central UPS provides power to essential equipment (Table 4.6-2) located in the Support Building and the Waste Handling Building. The central UPS is located in the Support Building. In addition, individual UPSs provide transient-free power to strategically located LPUs for the radiation monitoring system on the surface, in selected areas in the exhaust shaft, and underground passages and waste disposal areas.

The purpose of the central UPS is to supply (120/208 Vac, 222 A) transient-free, reliable power to the essential loads listed in Table 4.6-2. This ensures continuous power to the radiation detection system for airborne contamination, LPUs, computer room, central monitoring room, and primary analytical chemistry laboratory instruments, even during the interval between the loss of off-site power and initiation of backup diesel generator power.

In case of loss of AC power input to the UPSs, the dedicated batteries can supply power to a fully loaded UPS for 30 minutes. The AC power input to the UPS will be restored within approximately 30 minutes via operator action.

All monitoring loads fed from the UPS system are shown on Washington Tru Solutions (WTS) Drawing panel schedules for 41P-DP03/10, 41P-DP03/11, 45P-DP03/15, and 41P-DP03/17.[3] The connected load, as measured, is shown in Table 4.6-2.

4.6.1.4 Safety Considerations and Controls

Failure of the normal distribution system or any of its components will not affect safe conditions of the WIPP facilities. Upon loss of normal off-site power, the EFB isolation valves fail to the filtration mode. The simplified single-line diagram for the normal and manually switched backup loads is shown in Figures 4.6-2a and 4.6-2b (switching devices and equipment are symbolically represented).

4.6.2 Compressed Air

The compressed air system is Design Class IIIB. The system is diverse in the types and sizes of compressors used, and redundancy is provided for the main plant air compressors, salt hoist house, and the underground. All are electrically driven except for the diesel powered backup compressor in the underground.

The piping system consists of runs of 2, 4, and 6 in (5, 10, and 15 cm) pipe connecting the two compressor buildings to the WHB, Support Building, EFB, salt hoist house, and Safety Building. A pipe-run down the waste shaft serves the underground. Each building and the underground can be isolated from the system.

There are two general types of compressors in use at the WIPP. The majority are reciprocating, but the primary main plant air compressors and the underground backup compressor are rotary screw type. All are either single- or two-stage units; the backup main plant air compressors are the non-lubricated type for oil free output air.

The primary main plant air compressors are two single stage rotary screw units of 250 horsepower with a maximum capacity for each unit of 1,155 cfm (32.7 m^3/m) at a system pressure of 125 psi (8.8 kg/cm^2). Cooling for these compressors is accomplished with a fin and tube heat exchanger and cooling fan placed in the lubricating oil system.

The secondary main plant air compressors are two, two-stage, double acting reciprocating units of 200 horsepower and maximum capacity of 1,000 cfm (28.32 m^3/m) at 125 psi (8.8 kg/cm^2). These compressors are the only water cooled units on site, using a closed loop system, pumping a mixture of water and ethylene glycol antifreeze through a fin and tube heat exchanger with four electrically driven cooling fans.

A twin tower desiccant air dryer with prefilters and after filters is located just downstream of the compressors at each of the above installations to provide clean, moisture-free, compressed air dried to a dew point of 0°F (-18°C). A 1,000 gal (3785 L) capacity air receiver is located just downstream of the dryer at each location and connected to the site piping system.

The WHB and EFB employ desiccant air dryers similar to the large units installed at the main compressor buildings but much smaller. These dryers provide additional filtering of the air and lower the dew point to -40°F (-40°C). The Plant Air System ends at these dryers and the Instrument Air System begins. Instrument quality air is then used to operate dampers and control systems for the underground ventilation system and HVAC systems in the above mentioned buildings.

The salt hoist house has a backup installation similar to those described above but uses a refrigerated air dryer instead of the desiccant type. This unit provides air for operation of the hoist brakes in the event of a loss of plant air.

The maintenance shop, AIS hoist house, warehouse, and Engineering Building each have a stand alone compressor installation for vehicle maintenance, hoist operation, HVAC system operation, and other utility purposes. These buildings are not supplied by the plant air system.

Compressed gases sub-systems are installed in three site locations. The dosimetry laboratory uses nitrogen in processing the thermo-luminescent detectors. The counting laboratories use P-10, hydrogen, and liquid nitrogen in various analytical procedures. Mine Rescue uses high-pressure oxygen to refill breathing pack bottles. The commercial gas bottles are installed with Safety Binding and supply manifolds. Rescue uses compressed air for Scott Air Packs.

4.6.3 Water Distribution System

The Water Distribution System is designed to receive water from a commercial water department, transport the water to the WIPP Site, provide storage for the required reserve of fire water, chlorinate and store domestic water, and distribute domestic water for use by personnel, processes, HVAC and irrigation.

4.6.4 Sewage Treatment System

The sewage treatment facility collects and treats sanitary waste and non-radioactive liquids from the surface. Provisions also exist for the facility to receive non-hazardous effluents typically resulting from observation wells and the de-watering of mine shafts.

References for Section 4.6

1. WP 04-ED series Facility Operations procedures.

2. Air Quality Permit No. 310-M-2.

3. Main UPS System Panel Schedules 41P-DP03/10, 41P-DP03/11, 45P-DP03/15, 45P-DP03/17.

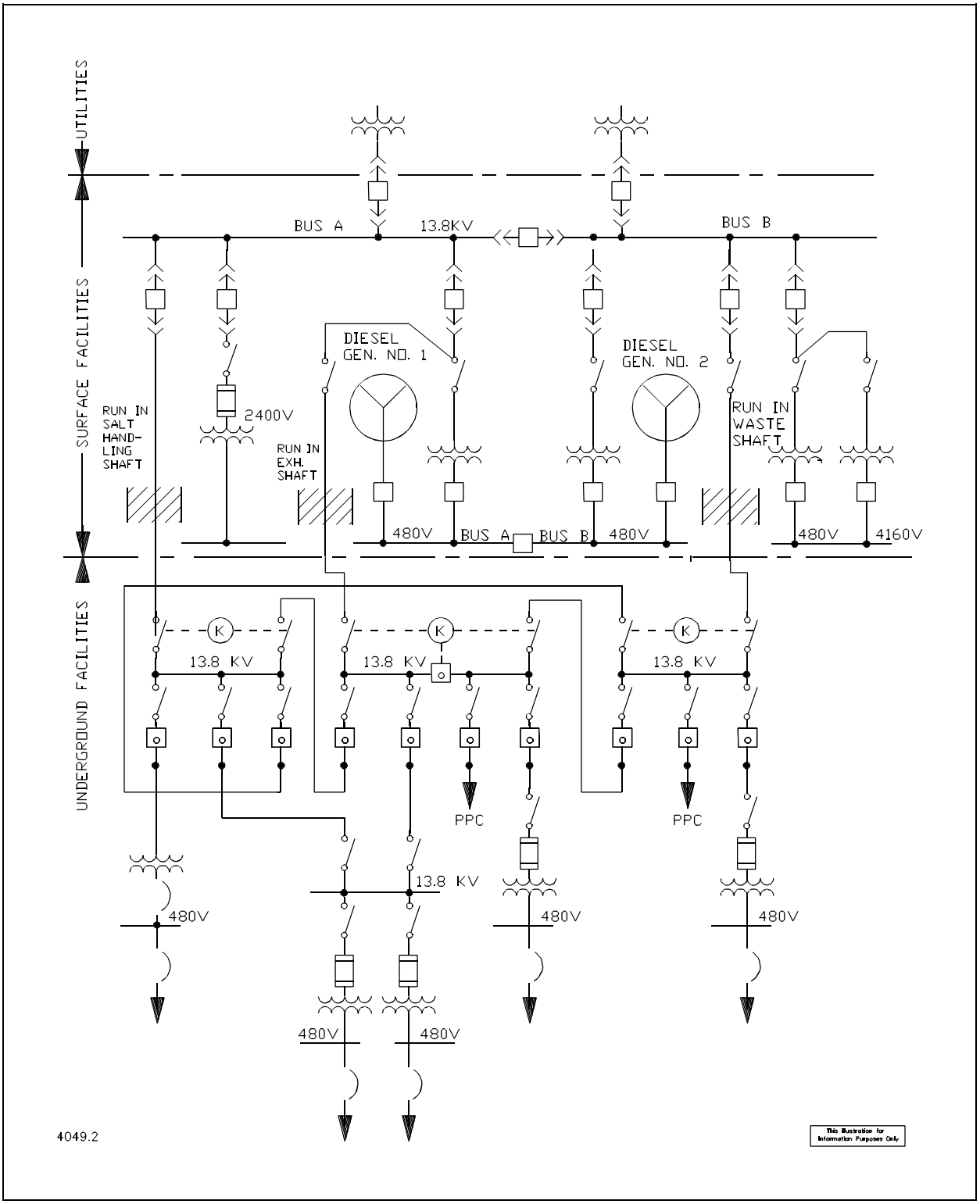

Figure 4.6-1, Electrical Distribution System

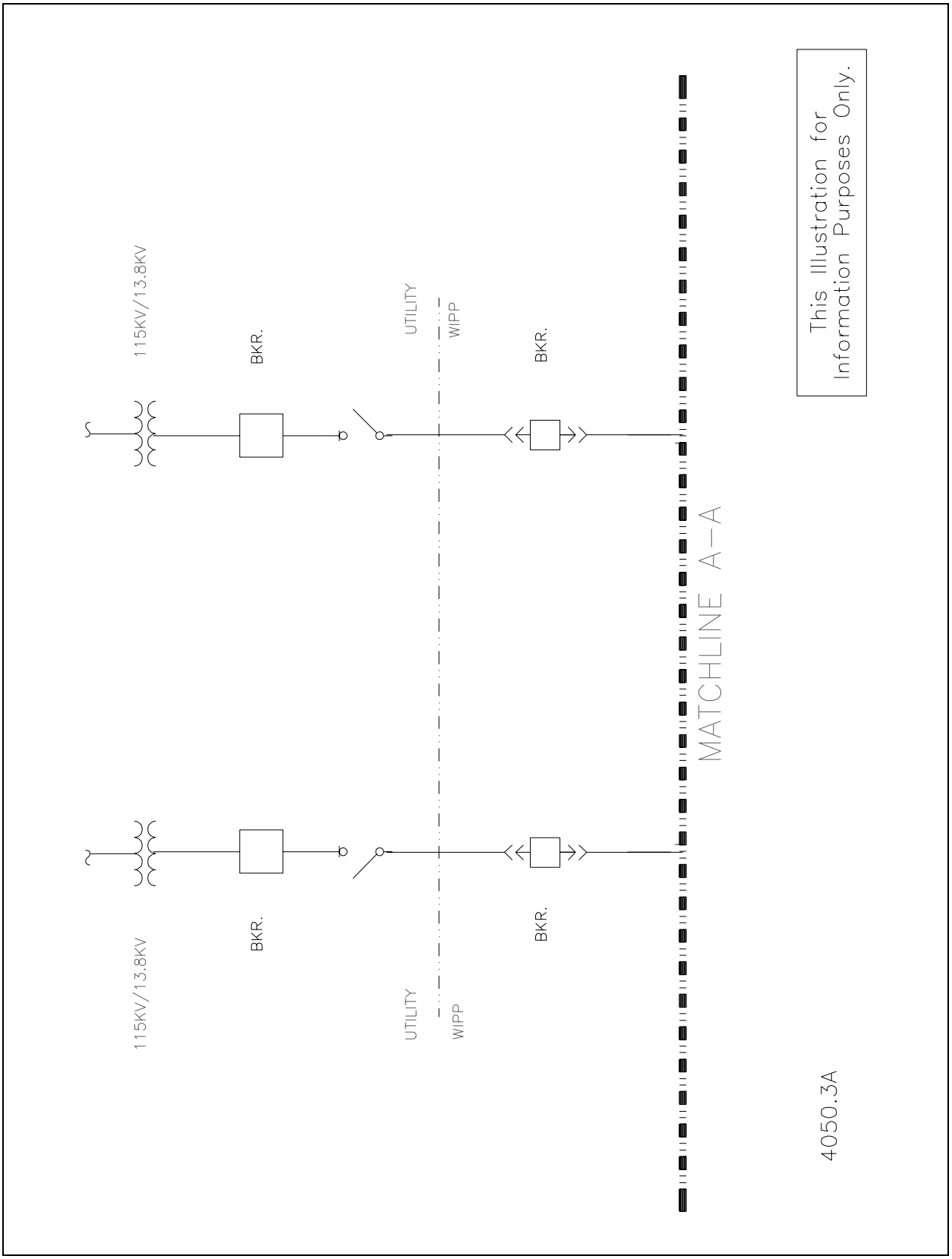

Figure 4.6-2a 13.8 kV Power Distribution System Single Line Diagram

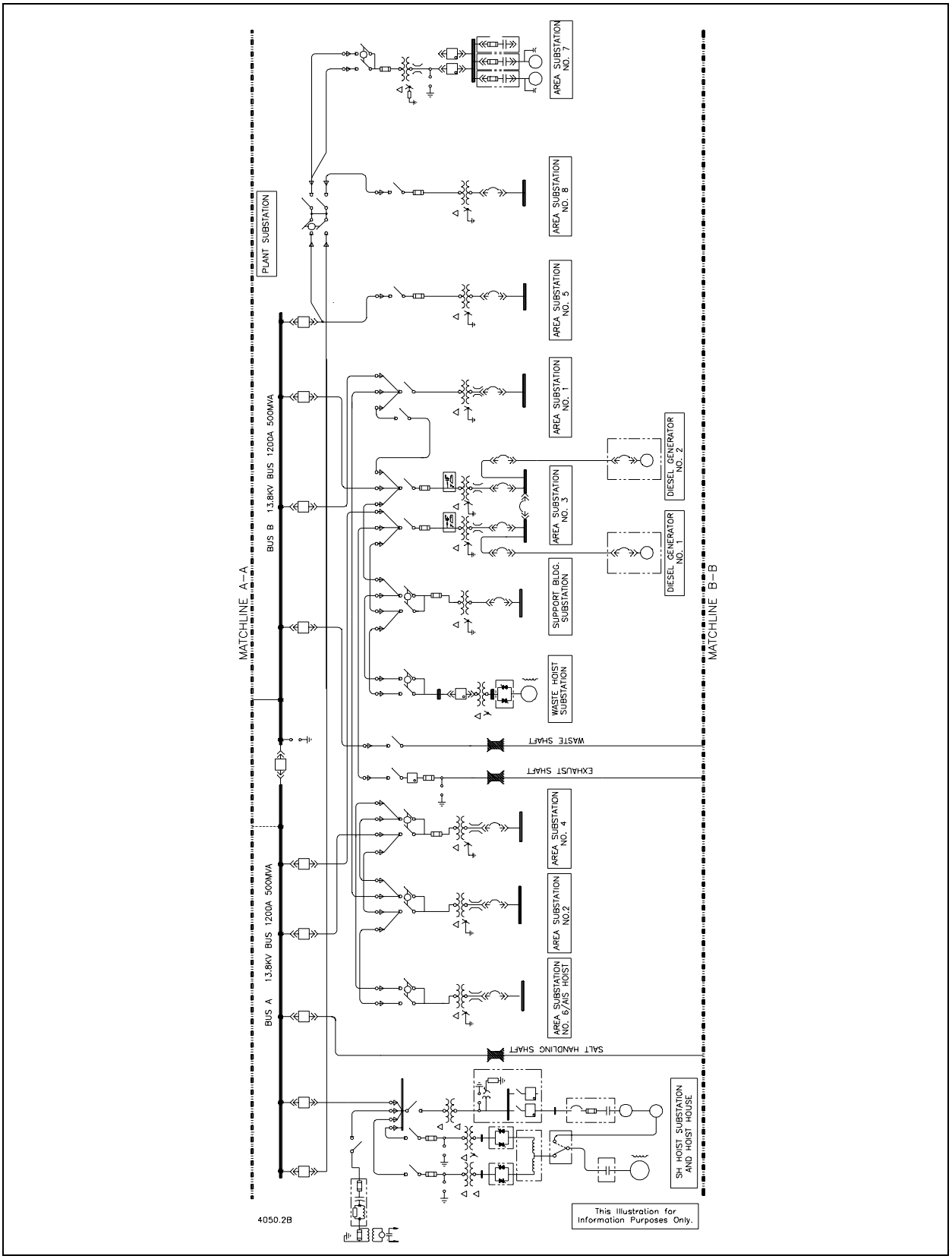

Figure 4.6-2b 13.8 kV Power Distribution System Single Line Diagram

Table 4.6-1 Diesel Generator Load

Manually Switched Backup		
Loads	**kW**	**Remarks**
Uninterruptible Power System* Central Monitoring System* WHB Continuous Air Monitors*	72	
Central Monitoring Room HVAC System Utilities	20	
Fire Protection Systems in the Waste Handling Building Support Building	30	Battery power is provided in fire protection system until the diesel generator is started and loaded.
Fire Pump	160	
Communications Systems	16	
Guard & Security Building	35	
Air Intake Shaft Hoist (If necessary for U/G evacuation)*	330	The diesel generators load is reduced to 900 kW prior to operating the AIS hoist.
WHB Lighting	45	
WHB Cranes	80	After the diesel generator is started cranes are energized as required to land their loads.
WHB Vacuum Pumps	50	
Main Air Compressors (1-200 hp)*	160	
U/G Exhaust Fans (1-235 hp)*	188	
Waste Handling Building Fans*	100	
U/G Sandia other Experimental Loads	400	
Safety & Emergency Services Building (EOC)*	10	
* Priority Back-up loads. Other loads picked up depending on actual kW loading of diesel or by load shedding.		

Table 4.6-2 UPS Loads

LOAD ON CENTRAL UPS	
• Radiological Monitoring System (ARM & CAM), • Central Monitoring System - CMS equipment in the Support Bldg. and in Waste Handling Bldg, • Communication System in Waste Handling and Support Bldg, • Seismic Trip in Waste Handling Bldg. • Network computers and equipment in the Support Bldg. Computer Room.	
Total Connected Load	88 kW
Running Load	30 kW
Loads on Individual UPS Units	
• CMS equipment in facilities other than Waste Handling and Support Buildings. • Selected Surface and Underground Radiological Monitoring Units, • Emergency Operations Center and Safety and Emergency Services Facility Guard and Security Building, • Safety Communication and Alarm System in facilities other then Waste Handling and Support Buildings.	
Total Independent Backup System Load	66 kVA

4.7 Radioactive Waste (Radwaste) and Hazardous Waste Management

Since the WIPP facility operational philosophy is to remain radiologically clean, decontamination operations following detection of contamination may generate some radioactive waste. The plant derived waste could originate in both the surface and underground facilities. Because derived wastes can contain only those materials present in the waste from which they were derived, no additional characterization of the derived waste is proposed for disposal purposes. Characterization of derived waste will be based on process knowledge. High activity waste is not expected to be generated during any normal operating sequences.

4.7.1 Liquid Radwaste System

Water used as a fire suppressant is the largest potential source of liquid radwaste. The fire potential in waste handling areas is remote, and contaminated water from fire fighting is not expected. All suspect liquids are collected, sampled and analyzed for radioactivity, and if the liquid exceeds the uncontrolled release limit of DOE Order 5400.5,[1] it is collected and made acceptable for disposal in the WIPP. Another source would be any liquid used for decontamination. All non-fire water liquid radwaste is collected in portable tanks or drums, and handled in accordance with procedure WP 05-WH1036, Site Derived Mixed Waste Handling.[2]

4.7.2 Solid Radwaste System

The solid radwaste system provides for the collection and packaging of site-derived solid radwaste including waste generated in performing radiochemistry in the Health Physics Laboratory. It is anticipated that all site-derived waste will be contact handled, due to its low activity and the nature of the potential for sources of site-derived solid waste at the WIPP facility.

The maximum estimated solid radwaste volumes derived at the WIPP facility are listed below.

	Estimated Annual Volume	
Source	cubic feet	(cubic meters)
Health Physics Laboratory	4	(0.11)
Solid Waste	205	(5.81)
Decontamination efforts	200	(5.66)
Sweeping	8	(0.23)
TOTAL	417	(11.8)

These maximum solid radwaste volumes are extremely conservative and actual volumes are expected to be much less. Solid radwaste is collected in standard Type A containers with filter vents, and accounted for in the WWIS.

4.7.3 Hazardous Waste System

Non-radioactive hazardous waste generated on-site typically includes absorbed liquids from spills and routine usage of maintenance products, including oils, coolants, and solvents. Safe storage of these materials and associated hazards are administered by the Site Generated Non-Radioactive Hazardous Waste Management,[3] the Industrial Safety Program,[4] and the WIPP Emergency Management Program.[5]

A Hazardous Waste/Material Storage Facility is provided for storage of various types of incoming and outgoing hazardous materials prior to shipment to a Treatment Storage and Disposal Facility, and is shown in Figure 4.1-2a.

References for Section 4.7

1. DOE Order 5400.5, Radiation Protection of the Public and the Environment, January 1993.

2. WP 05-WH1036, Site-Generated Mixed Waste Handling.

3. WP 02-RC.01, Site-Generated Non-Radioactive Hazardous Waste Management.

4. WP 12-IS.01, Industrial Safety Program.

5. WP 12-9, WIPP Emergency Management Program.

This page intentionally blank

4.8 Human Factors Engineering Considerations

This section summarizes the systematic inquiry of the importance to safety of reliable, correct, and effective human-machine interactions, considering the mission of the WIPP facility and the physical nature of the radioactive wastes that it will receive. The specific human errors that can contribute to accidental releases of hazardous materials are discussed in Chapter 5 as an integral part of each hypothesized accident. Based on the analysis of those accidents and the discussion below, it can be concluded that the WIPP waste acceptance criteria for transuranic wastes, facility design, and operational controls provide high confidence that all potential releases can be contained with passive safety features that eliminate the need for human actions requiring sophisticated human-machine interfaces.

To provide additional support for the conclusion that no detailed human factor evaluation of human-machine interfaces is required, a scoping assessment of the effectiveness of the human-machine interfaces that support important design functions of the Table 4.1-1 Design Class II and IIIA systems is summarized in Table 4.8.1. [It can be seen that most of the Design Class II and IIIA systems and equipment do not require human actions to initiate or sustain their function relative to the release of radiological or non-radiological waste materials.] In most cases these functions are accomplished with automatic passive mechanisms designed to provide containment for the waste materials.

Functions allocated to automatic passive mechanisms or automatic active systems may be influenced by human error during maintenance. However, using the graded approach, human-machine interfaces for maintenance activities at WIPP are judged to be adequate because they are deliberate, and there is ample opportunity to discover errors and correct them with no adverse safety consequences. The policy outlined in WP 10-2, Maintenance Operations Instruction Manual,[1] states that maintenance shall have a high degree of integration with other activities and shall have minimal impact on operations. Maintenance on specific systems is listed on the Plan of the Week, which Operations management must approve. A Plan of the Day meeting further ensures that coordination will be maintained. Finally, the facility is designed to provide adequate space and a favorable environment in which to accomplish maintenance activities.

The ability of the staff to accomplish their responsibilities in potential accident environments is addressed in Section 8.5. The limited magnitude of the hazard and the lack of dispersal driving forces provide very high confidence that the staffing and training presented in those sections will enable the staff to perform their responsibilities in potential accident environments. The graded approach to human factors engineering considerations is justified by the evaluation of the design and operation of the WIPP against three criteria given in Paragraph 8a of DOE Order 5480.23:[2]

- **Criteria (a) — Magnitude of Hazard.** The magnitude of hazardous materials that can be involved in an accident leading to a release is very limited. The radioactive material is delivered to the site in sealed canisters; and, the waste handling operations are designed to maintain that integrity throughout the entire process required to safely emplace those canisters in the site's underground waste disposal rooms. Inventory limits on individual canisters ensure that heat generated by radioactive decay can be easily dissipated by passive mechanisms. Finally, only a limited number of waste canisters have the possibility of being breached as a result of any one accident initiating event. As a result, the consequences of unmitigated releases from all accidents hypothesized in Chapter 5, including those initiated by human error, do not produce significant offsite health consequences.

- **Criteria (b) — Complexity of the Facility and/or Systems Being Relied on to Maintain an Acceptable Level of Risk.** The facility has no complex system requirements to maintain an acceptable level of risk. The facility is designed to minimize the presence and impact of other energy sources that could provide the heat or driving force to disperse hazardous materials. When something unusual happens during normal operations, such as support systems becoming unavailable, waste handling can be simply stopped and personnel evacuated until an acceptable operating condition is reestablished.

  Should an initiating event occur that breaches a waste canister, the plant design permits the immediate cessation of activity and isolation of the area where the breach occurs. Once isolation is achieved, there is no driving force within the waste or waste handling area that could result in a release of the waste material. Consequently, sufficient time is available to thoroughly plan and prepare for the remediation process prior to initiating decontamination and recovery actions.

- **Criteria (c) — Stage of Life Cycle.** Human factors considered here is limited to that time necessary to properly emplace the transuranic waste designated for disposal at WIPP. The operations will be straightforward, proceduralized, and consistent. Moreover, operations will be continued for only the period of time needed to complete the disposal process.

  Once a panel is filled and sealed off, the natural properties of the salt and the location of the mine combine to provide passive isolation of the waste from the environment. The potential for human intrusion after the facility closure is beyond the scope of the human factors evaluation considered here.

References for Section 4.8

1. WP 10-2, Maintenance Operations and Instruction Manual.

2. DOE Order 5480.23, Nuclear Safety Analysis Report, August 1994.

Table 4.8-1 Human Factors Evaluation Requirements of Design Class II/IIIA SSCs

Table 4.1-1 Description			Functional Allocation	Human Errors Impacting Safety Function (Excluding Design, Maintenance, and Testing) and Consequence.	Human Factors Screening Results
System/Component	**Design Class**	**Design Class Function**			
PLANT BUILDINGS, FACILITIES, AND MISCELLANEOUS EQUIPMENT (SDD-CFOO)					
Waste Handling Building structure and structural components including tornado doors (Bldg. 411)	II	Provide physical confinement	Passive Mechanisms	None	Adequate
Auxiliary Air Intake Shaft and Tunnel (Bldg 465)	II	DBE, DBT	Passive Mechanisms	None	Adequate
Station A Effluent Monitoring Instrument Shed (Bldg 364)	II	Design Class Interface. (Houses Station A)	Passive Mechanisms	None	Adequate
Effluent Monitoring Rooms A and B (Building 413A and 413B)	II	Design Class Interface. (Houses Local Processing Units (LPU)s collecting data from Stations A and B)	Passive Mechanisms	None	Adequate
Station B Effluent Monitoring Instrument Shed (Bldg 365)	IIIA	Design Class Interface. (Houses monitoring equipment for Exhaust Filter Building duct)	Passive Mechanisms	None	Adequate
Support Building (Bldg 451)	IIIA	Design Class Interface. (Houses Central Monitoring Room (CMR))	Passive Mechanisms	None	Adequate
Exhaust Filter Building (Bldg 413)	IIIA	Design Class Interface. (Houses Exhaust Filtration System)	Passive Mechanisms	None	Adequate
EFB HEPA Filter Units & Isolation Dampers	II	Failure could prevent mitigation	Passive Mechanisms	None	Adequate
EFB Exhaust System	IIIA	Failure could prevent mitigation	Passive Mechanisms	None	Adequate

Table 4.8-1 Human Factors Evaluation Requirements of Design Class II/IIIA SSCs

Table 4.1-1 Description			Functional Allocation	Human Errors Impacting Safety Function (Excluding Design, Maintenance, and Testing) and Consequence.	Human Factors Screening Results
System/Component	**Design Class**	**Design Class Function**			
Building 412 (Originally TRUPACT Maintenance Facility)	IIIA	Design Class Interface. (Structural interface with WHB)	Passive Mechanisms	None	Adequate
PLANT MONITORING AND COMMUNICATION SYSTEM (SDD-CMOO)					
Central Monitoring System	IIIA	Monitors important facility parameters	Automatic with alarms and readout in CMS.	CMRO fails to monitor and back up automatic functions. No human mitigation of ongoing scenario	Adequate
ENVIRONMENTAL MONITORING SYSTEM (SDD-EM00)					
Volatile Organic Compound (VOC) Monitoring Equipment and sub-systems	IIIA	Monitors release of VOCs	N/A	No safety function - Periodic sampling for confirmatory monitoring in accordance with RCRA	Adequate
HEATING, VENTILATION, AND AIR CONDITIONING (HVAC) SYSTEM (SDD-HV00)					
Exhaust Filtration System	II	Design Class Interface. (Control of radioactive effluent)	Passive Mechanisms.	None. Filters required to be online during waste handling.	Adequate
HEPA Filters	II	Control of radioactive effluent	Passive Mechanisms	None. Filters required to be online during waste handling.	Adequate
Tornado Dampers	II	Control of radioactive effluent	Automatic	None	Adequate
Exhaust Systems HV02, (Bldg 411, RH HVAC), and HV04 (Station A and Bldg 413, Exhaust Filter Building HVAC)	IIIA	Design Class Interface. (Provide filtration and maintain differential pressure)	Passive Mechanisms	None. Systems required to be online during waste handling.	Adequate

Table 4.8-1 Human Factors Evaluation Requirements of Design Class II/IIIA SSCs

Table 4.1-1 Description			Functional Allocation	Human Errors Impacting Safety Function (Excluding Design, Maintenance, and Testing) and Consequence.	Human Factors Screening Results
System/Component	**Design Class**	**Design Class Function**			
HVAC for the CMR	IIIA	Design Class Interface. (Maintains acceptable CMR environment)	Automatic	None	Adequate
RADIATION MONITORING SYSTEM (SDD-RM00)					
Stations A3, B2, C, and D1 (including UPSs)	II	Monitors radioactive effluents	Automatic with alarms and readout in CMS.	CMRO fails to verify operation and notify plant personnel. FSM fails to initiate facility emergency plans. No human mitigation of ongoing scenario.	Adequate
The remainder of the RMS SSCs (except PV00 equipment which is IIIB) are Design Class IIIA	IIIA	Monitors radioactive effluents	Automatic with alarms and readout in CMS.	CMRO fails to verify operation and notify plant personnel. FSM fails to initiate facility emergency plans. No human mitigation of ongoing scenario.	Adequate
UNDERGROUND HOIST SYSTEM (SDD-UH00)					
Waste Hoist and Equipment	IIIA	Failure could cause radioactive material release	Automatic (See WIPP/WID-96-2178 Rev. 0)	None	Adequate

Table 4.8-1 Human Factors Evaluation Requirements of Design Class II/IIIA SSCs Page 4 of 7

Table 4.1-1 Description			Functional Allocation	Human Errors Impacting Safety Function (Excluding Design, Maintenance, and Testing) and Consequence.	Human Factors Screening Results
System/Component	**Design Class**	**Design Class Function**			
UNDERGROUND VENTILATION SYSTEM (SDD-VU00)					
Exhaust duct elbow at the top of the Exhaust Shaft	II	Design Class Interface. (Channels exhaust air to the EFB)	Passive Mechanisms	None	Adequate
HEPA Filters and Isolation Dampers	II	Control of radioactive effluent	Passive Mechanisms	None	Adequate
Exhaust Fans for the filtration mode	II	Design Class Interface. (Channels exhaust air through the EFB)	Passive Mechanisms	None	Adequate
Exhaust System Instruments and Hardware	IIIA	Design Class Interface. (Supports Exhaust Filtration System)	Passive Mechanisms	None	Adequate
(6) High Pressure Fans for Bulkhead 309 (Pressure Chamber)	IIIA	Maintain buffer zone between RMA and non-RMA	Passive Mechanisms	None	Adequate
WASTE HANDLING EQUIPMENT (SDD-WH00)					
Facility Cask	II	Provides permanent shielding	Passive Mechanisms	None	Adequate
25-Ton Crane - CUR	IIIA	Failure could cause radioactive materials release	Active - In use manual	Failure could lead to initiating event for RH Accident Release	Adequate
Telescoping Port Shield	II	Provides permanent shielding	Passive Mechanisms	None	Adequate
Shield Bell	II	Provides permanent shielding	Passive Mechanisms	None	Adequate
CUR Floor Shield Valve	II	Provides permanent shielding	Passive Mechanisms	None	Adequate
Hot Cell Shield Valve	II	Provides permanent shielding	Passive Mechanisms	None	Adequate

Table 4.8-1 Human Factors Evaluation Requirements of Design Class II/IIIA SSCs Page 5 of 7

Table 4.1-1 Description			Functional Allocation	Human Errors Impacting Safety Function (Excluding Design, Maintenance, and Testing) and Consequence.	Human Factors Screening Results
System/Component	Design Class	Design Class Function			
Transfer Cell Ceiling Shield Valve	II	Provides permanent shielding	Passive Mechanisms	None	Adequate
Hot Cell Transfer Drawer	II	Provides permanent shielding	Passive Mechanisms	None	Adequate
Hot Cell Viewing Windows	II	Provides permanent shielding	Passive Mechanisms	None	Adequate
140/25 ton crane	IIIA	Programmatic Impact	Active - In use manual	Failure could lead to initiating event for RH Accident Release	Adequate
Cask Lifting Yoke (140/25 ton crane)	IIIA	Programmatic Impact	Active - In use manual	Failure could lead to initiating event for RH Accident Release	Adequate
15-ton Overhead crane- Hot Cell	IIIA	Failure could cause radioactive materials release	Active - In use manual	Failure could lead to initiating event for RH Accident Release	Adequate
Bridge and Trolley/Par 6000 Manipulator (Hot Cell)	IIIA	Programmatic Impact	Active - In use manual	Failure could lead to initiating event for RH Accident Release	Adequate
Master-Slave Manipulators (Hot Cell)	IIIA	Programmatic Impact	Active - In use manual	None	Adequate
Hot Cell Grapple Rotating Block	IIIA	Programmatic Impact	Passive Mechanisms	Failure could lead to initiating event for RH Accident Release	Adequate
6.25 ton Overhead Fixed Hoist - Facility Cask Loading Room	IIIA	Failure could cause radioactive materials release	Passive Mechanisms	None	Adequate
Facility Cask Rotating Device	IIIA	Programmatic Impact	Passive Mechanisms	None	Adequate

Table 4.8-1 Human Factors Evaluation Requirements of Design Class II/IIIA SSCs Page 6 of 7

Table 4.1-1 Description			Functional Allocation	Human Errors Impacting Safety Function (Excluding Design, Maintenance, and Testing) and Consequence.	Human Factors Screening Results
System/Component	Design Class	Design Class Function			
Facility Grapples (Hot Cell & Facility Cask Loading Room)	IIIA	Failure could cause radioactive materials release	Active - In use manual	Failure could lead to initiating event for RH Accident Release	Adequate
Shielded Insert	IIIA	Failure could cause radioactive materials release	Active - In use manual	None	Adequate
The Horizontal Emplacement and Retrieval Equipment (HERE)	IIIA	Programmatic Impact	Active - In use manual	Failure could lead to initiating event for RH Accident Release	Adequate
Transfer Cell Shuttle Car	IIIA	Failure could cause radioactive materials release	Active - In use manual	Failure could lead to initiating event for RH Accident Release	Adequate
10-160B Drum Carriage Lift Fixture	IIIA	Failure could cause radioactive materials release	Active - In use manual	Failure could lead to initiating event for RH Accident Release	Adequate

This page intentionally blank

HAZARD AND ACCIDENT ANALYSIS
TABLE OF CONTENTS

SECTION TITLE PAGE NO.

5.1 Remote Handled (RH) Transuranic (TRU) Hazard Analysis 5.1-1
5.1.1 Hazard Identification 5.1-1
5.1.2 RH Waste Characterization 5.1-3
5.1.2.1 RH TRU Wastes 5.1-4
5.1.2.1.1 RH TRU Radionuclide Inventory 5.1-4
5.1.2.1.2 RH Radionuclide Inventory for Safety Analysis Calculations 5.1-5
5.1.2.2 TRU Mixed Waste 5.1-6
5.1.3 RH Hazard Categorization 5.1-10
5.1.4 Hazard Evaluation 5.1-10
5.1.4.1 HAZOP Methodology 5.1-11
5.1.4.2 Selection of RH Potential Accidents 5.1-16
5.1.5 Prevention of Inadvertent Nuclear Criticality 5.1-17
5.1.5.1 WIPP Nuclear Criticality Safety Program Elements 5.1-17
5.1.5.2 Compliance with Mandatory ANSI/ANS Standards 5.1-18
5.1.6 Defense-in-Depth 5.1-19
5.1.7 Protection of Immediate Workers from Accidents 5.1-20
5.1.8 Defense-in-Depth Structures, Systems, and Components (SSCs) 5.1-22
References for Section 5.1 . . . . . 5.1-23

5.2 RH TRU Accident Analysis 5.2-1
5.2.1 Accident Assessment Methodology 5.2-3
5.2.1.1 Non-involved Worker and MEI Accident Assessment Methodology 5.2-3
Receptors 5.2-3
Source Term Methodology 5.2-3
Waste Container Radiological and Non-radiological Inventories (CI) and Containers Damaged (CD) 5.2-4
Damage Ratio (DR) 5.2-6
Airborne Release (ARF) and Respirable (RF) Fractions 5.2-8
Leakpath Factor (LPF) 5.2-11
Dispersion Modeling Methodology 5.2-11
Consequence Methodology 5.2-13
Radiological Releases 5.2-13
Chemical Releases 5.2-14
Frequency Determination Methodology 5.2-14
5.2.1.2 Immediate Worker Accident Assessment Methodology 5.2-15
Receptors 5.2-15
Source Term Methodology 5.2-16
Frequency Determination Methodology 5.2-16
Consequence Modeling Methodology 5.2-16
5.2.2 Off-site and On-site Risk Evaluation Guidelines 5.2-18
5.2.2.1 Radiological Risk Evaluation Guidelines 5.2-18
5.2.2.2 Non-radiological Risk Evaluation Guidelines 5.2-19
5.2.3 Accident Analysis 5.2-20
5.2.3.1 RH1 Fire in the Underground 5.2-20

HAZARD AND ACCIDENT ANALYSIS
TABLE OF CONTENTS

SECTION TITLE PAGE NO.

5.2.3.2 RH2 Fire in the WHB 5.2-25
5.2.3.3 RH3 Loss of Confinement in the WHB 5.2-26
5.2.3.4 RH4-A Loss of Confinement in the Underground (Waste Hoist Failure) 5.2-31
5.2.3.5 RH4-B Loss of Confinement in the Underground (Waste Movement) . . 5.2-36
5.2.3.6 RH5 Fire Followed by Explosion in the Underground 5.2-39
5.2.3.7 RH6 Seismic Event 5.2-42
5.2.3.8 RH7 Tornado Event 5.2-45
5.2.3.9 RH8 Aircraft 5.2-47
5.2.3.10 NC1 Fire in the Hot Cell 5.2-48
5.2.3.11 NC2 Fire in the Underground 5.2-52
5.2.3.12 NC3 Loss of Confinement in the WHB 5.2-53
NC3-A Dropped Object on Waste Material in Hot Cell 5.2-55
NC3-B Dropped Object on Waste Material Outside Hot Cell 5.2-57
NC3-C Dropped Drum or Canister in Hot Cell 5.2-58
NC3-D Dropped Drum or Canister Outside Hot Cell 5.2-60
NC3-E Puncture of Drum in Hot Cell 5.2-61
NC3-F Puncture of Drum or Canister Outside Hot Cell 5.2-62
NC3-G Puncture of 10-160B Cask in RH Bay 5.2-64
NC3-H Dropped 10-160B Cask in RH Bay 5.2-65
NC3-I Toxic Gas Generation in Hot Cell 5.2-66
5.2.3.13 NC4 Loss of Confinement in the Transfer Cell or Underground 5.2-67
5.2.3.14 NC5 Explosion Followed by Fire in the Hot Cell 5.2-69
5.2.3.15 NC6 Fire Followed by Explosion in the Underground 5.2-70
5.2.3.16 NC7 Seismic Event 5.2-70
5.2.3.17 NC8 Tornado Event 5.2-73
5.2.4 Assessment of WIPP RH Facility Design Basis and Waste Acceptance Criteria . . 5.2-74
5.2.4.1 Assessment of WIPP RH Facility Design Basis 5.2-74
5.2.4.2 Analysis of Beyond the Design Basis Accidents 5.2-81
5.2.4.3 Assessment of WIPP Waste Acceptance Criteria (RH WAC) 5.2-82
References for Section 5.2 . . . . . 5.2-84

5.3 Long-Term Waste Isolation Assessment 5.3-1
References for Section 5.3 . . . . . 5.3-2

5.4 Conclusions 5.4-1

HAZARD AND ACCIDENT ANALYSIS
LIST OF FIGURES

FIGURES **TITLE** **PAGE NO.**

Figure 5.2-1, WIPP Site Boundary Area 5.2-87
Figure 5.2-2, WIPP Site Off-Limits Boundary Area 5.2-89
Figure 5.3-1, Methodology for Performance Assessment for the WIPP 5.3-3
Figure 5.3-2, Final WIPP CCDF 5.3-4

HAZARD AND ACCIDENT ANALYSIS
LIST OF TABLES

TABLES	TITLE	PAGE NO.
Table 5.1-1	Maximum Hazardous Material Inventory by Facility Location	5.1-25
Table 5.1-2	VOC Concentrations	5.1-26
Table 5.1-3	Hazardous Material Concentrations Used in Analysis	5.1-27
Table 5.1-4	Initiating Frequency Evaluation Levels	5.1-28
Table 5.1-5	Qualitative Total Consequence Classification and Rank	5.1-29
Table 5.1-6	Qualitative Radiological Consequence Classification and Rank	5.1-30
Table 5.1-7	Risk Binning Matrix	5.1-31
Table 5.1-8	Summary of Hazardous Events Selected for Quantitative Analysis	5.1-32
Table 5.1-9	Specific Accidents Selected for Quantitative Analysis	5.1-34
Table 5.1-10	HAZOP Accident Scenario Ranking	5.1-35
Table 5.1-11	Summary of Potential Controls for Immediate Worker Protection	5.1-48
Table 5.2-1a	MEI Risk Evaluation Guidelines	5.2-90
Table 5.2-1b	Noninvolved Worker Risk Evaluation Guidelines	5.2-91
Table 5.2-2	Toxicological Guidelines	5.2-92
Table 5.2-3a	Summary of Noninvolved Worker and MEI Estimated Radiological Concentrations and Comparison to Guidelines	5.2-93
Table 5.2-3b	Summary of Immediate Worker Estimated Radiological Dose and Comparison to Guidelines	5.2-95
Table 5.2-4a	Summary of Noninvolved Worker and MEI Estimated Nonradiological Concentrations and Comparison to Guidelines	5.2-97
Table 5.2-4b	Summary of Immediate Worker Estimated Nonradiological Concentrations and Comparison to Guidelines	5.2-100

HAZARD AND ACCIDENT ANALYSIS

This chapter: (1) systematically identifies the potential hazards resulting from Waste Isolation Pilot Plant (WIPP) remote handled (RH) transuranic (TRU) waste disposal-phase handling and emplacement normal operations, and (2) assesses those hazards to evaluate abnormal, internal operational, external, and natural phenomena events that could develop into accidents. The hazard analysis: (1) considers the complete spectrum of accidents that may occur and qualitatively analyzes the accident annual occurrence frequency, and the resultant potential consequences to the public, workers, facility operations, and the environment; (2) identifies and assesses associated preventative and mitigative features for defense-in-depth; and (3) identifies a subset of accidents to be quantitatively evaluated in the accident analysis. The accident analysis evaluates these accidents against risk evaluation guidelines to verify the adequacy of the preventative and mitigative systems.

The methodology and requirements of 10 CFR Part 830.204,[1] and its implementing standards DOE-STD-1027-92[2] and DOE-STD-3009-94[3] were utilized in the development of this chapter. The potential hazards associated with the long-term waste isolation phase are addressed in the WIPP performance assessment submitted to EPA in October, 1996. The performance assessment is summarized in Section 5.3.

5.1 Remote Handled (RH) Transuranic (TRU) Hazard Analysis

The RH TRU 72-B cask and RH TRU 10-160B cask hazard analysis involved a multi-step process which included (1) identification of the potential hazards associated with RH waste handling operations, (2) characterization of the RH waste expected at the WIPP, (3) hazard evaluations in the form of Hazard and Operability Studies[4 &5] (HAZOPs) for the 72-B cask and 10-160B cask waste handling and emplacement processes, (4) the identification of potential accidents requiring quantitative accident analysis, (5) development of the defense-in-depth philosophy, and (6) an evaluation of worker protection from those accidents identified in the qualitative hazards analysis.

The hazard analysis in this section includes a thorough review of the following documentation; Final Environmental Impact Statement (FEIS),[6] Final Supplement Environmental Impact Statement (SEIS),[7] WIPP Fire Hazards and Risk Analysis (FHRA),[8] and Failure Modes and Effects Analyses to ensure hazards were thoroughly evaluated.

5.1.1 Hazard Identification

A hazard is defined as a material, energy source, or operation that has a potential for causing injury or illness in humans, or damage to a facility or the environment, without regard for the frequency or credibility of accident scenarios or consequence mitigation.[3] Hazards associated with normal WIPP operations include mining dangers, high voltage, compressed gases, confined spaces, radiological and non-radiological hazardous materials, non-ionizing radiation, high noise levels, mechanical and moving equipment dangers, working at heights, construction, and material handling dangers. Waste handling operations at the WIPP do not involve high temperature and pressure systems, rotating machinery, electromagnetic fields, or use of toxic materials in large quantities.

Routine occupational hazards are regulated by DOE-prescribed Occupational Safety and Health Act (OSHA) and by Mine Safety and Health Act (MSHA) standards. Programs for protecting WIPP workers from routine occupational hazards are discussed in Chapter 8.

As part of normal operations activities at the WIPP, the RH waste canisters (having met the WIPP RH Waste Acceptance Criteria[10] (RH WAC)) are inspected and surveyed for radiation, contamination, and damage before transfer to the Underground repository. Most significantly, the cleanliness of canisters is required to not be in excess of the DOE's free release limits in 10 CFR 835,[11] Occupational Radiation Protection, Appendix D prior to shipment from the generator sites. (See Chapter 7 for the basis for radiological and hazardous material protection limits.) WIPP normal operations do not entail any planned or expected releases of airborne radioactive materials which may present an internal occupational radiological hazard to workers, or present a hazard from the airborne pathway to the offsite public. Therefore, the radiological hazards for normal operations are limited to worker occupational external radiation exposure from the waste canisters. Non-radiological hazards to the public and worker during normal operations may result from small releases of Volatile Organic Compounds (VOCs) from waste canisters. Protection of the public and the worker from hazards involved with radiological and non-radiological materials during normal WIPP operations are discussed in detail in Chapter 7. Only that material contained in the waste containers is considered in establishing an inventory of radiological and non-radiological material, .

Operational, natural phenomena (such as earthquakes and tornadoes), and external hazards (such as aircraft crashes) are considered in this chapter when they are identified as an initiating event leading to an uncontrolled abnormal or accidental release of radiological or non-radiological materials from waste containers.

The external hazards presented by a natural gas pipeline explosion have been evaluated and are determined not to be a safety concern for the WIPP facility. Although significant localized heat, fire, and destruction result from such events, the nearest major gas pipeline to the Waste Handling building (WHB) is one mile away, and experience from recent occurrences indicates the explosion damage radius is a few hundred feet.

The hazards presented by the movement or mounting of pressurized gas cylinders used for alpha/beta counting systems in waste handling areas initiating an accident resulting in the release of waste container materials have been evaluated as being beyond extremely unlikely when the guidance provided in WP 12-IS.01, Industrial Safety Program[12], is adhered to.

For all conceivable operations and activities during the operational disposal-phase, few credible mechanisms can be identified that could lead to accidental releases of radiological and non-radiological hazardous materials. The RH waste containers are designed and fabricated in accordance with stringent regulatory requirements. The integrity of the waste containers is ensured during the design life in relation to the time interval of the disposal-phase. While accidents or incidents could occur to individual waste containers, the structural capabilities of the canisters and drums as designed can sustain anticipated waste canister drops of less than 4 ft (1.22 m) from waste handling equipment. In addition, WIPP waste handling operations do not entail any dispersal energies from high pressure, high temperature, or high energy systems that could result in breach of waste container integrity.

Additionally, it should be noted that the hazards identified as a result of WIPP operations, in relation to most high or moderate hazard nuclear facilities, do not require safe shutdown of the facility in a specific manner in terms of time and technical conditions. The WIPP facility and operations either individually, or collectively, can be shutdown or stopped at any time.

Inventory of Hazardous Materials

The hazard identification process resulted in identifying process operation locations within the WHB and the Underground disposal horizon for which an inventory of radiological material could be identified. The anticipated inventory was determined based on material form, location, and quantity associated with the process of receipt, handling, and disposal of RH TRU waste.

These process operation locations include:

1. Waste Handling Building
   - RH Bay
   - Cask Unloading Room (CUR)
   - Hot Cell
   - Transfer Cell
   - Facility Cask Loading Room
   - Conveyance Loading Room

2. Underground Horizon
   - Waste Shaft Station
   - Disposal Panel

Table 5.1-1 summarizes the maximum RH TRU waste canister inventory by facility process location. The radiological and non-radiological 72-B waste canister contents and the 10-160B cask contents are characterized in Section 5.1.2. The bounding radiological and non-radiological hazardous material inventory for each process location may be obtained by multiplying the number of 72-B waste canisters or the number of 10-160B casks by the maximum contents derived in Section 5.1.2.

5.1.2 RH Waste Characterization

This section describes the methodology used in the development of RH 72-B waste canister and 10-160B cask contents (radioactive/chemical content) to be disposed of at the WIPP. A description of 72-B waste canisters, 10-160B casks, types, volumes, radioactive and non-radioactive constituents, and discussions on content development are included for use in the hazards and accident analysis.

72-B waste canisters considered for this analysis are standard DOT Type A (or equivalent) canisters (maximum gross weight of 8,000 lb (3628.7 kg). The design of the canister is discussed in detail in Section 4.2.

The 10-160B cask meets the certification requirements for DOT Type B shipping containers (10 CFR 71.71-73) and has a maximum gross weight of 72,000 lb. The maximum total weight of the contents of a 10-160B cask is 14,500 lbs. including any shoring, waste drums, and optional insert.[13] The 55-gal drums in the 10-160B cask meet the certification requirements for DOT Type A shipping containers (49 CFR 178.350).

5.1.2.1 RH TRU Wastes

As defined in Public Law 102-579, WIPP Land Withdrawal Act,[14] the term "transuranic waste" means waste containing more than 100 nanocuries of alpha-emitting transuranic isotopes per gram of waste, with half lives greater than 20 years, except for: a) high-level radioactive waste; b) waste that the Secretary has determined, with the concurrence of the Administrator, does not need the degree of isolation required by the disposal regulations; or c) waste that the Nuclear Regulatory Commission (NRC) has approved for disposal on a case-by-case basis in accordance with 10 CFR 61.

TRU waste is classified as either CH or RH, depending on the external dose rate at the waste container surface. RH TRU wastes are packaged with an external surface dose rate of up to 1000 rem/hr (10 Sv/hr). RH TRU waste decays principally by gamma and beta emission, with some alpha and neutron emissions. Alpha emitting radionuclides result in no external radiation exposure to humans, but are hazardous if inhaled or ingested. Since beta emissions, like alpha, have limited penetrating energy, adequate personnel protection is provided by the waste container. Gamma and neutron radiation are more penetrating, and require shielding for safe management and storage. RH TRU waste contains predominantly gamma and beta-emitting radioisotopes, and closed canisters provide protection from inhalation or ingestion.

5.1.2.1.1 RH TRU Radionuclide Inventory

The WIPP TRU Waste Baseline Inventory Report [17] (BIR), Revision 3, provides estimated volumes of RH TRU waste to be supplied by 9 DOE waste generator and/or storage sites. The radionuclide inventory by final waste form, stored waste volume, and waste site, as derived from a June 1996 query of Revision 3 of the BIR database, is shown in Table A-1 of Appendix A. Table A-2 shows the Pu-239 equivalent radioactivity (PE-Ci) of the radionuclides contained the RH TRU waste to be shipped to WIPP. (See Appendix B for a discussion on the PE-Ci concept). Table A-3 shows the radionuclide concentration in PE-Ci/canister for each RH waste generator site as well as the stored volume and equivalent number of canisters.

Revision 3 of the BIR[17] also provided new sampling data for the ORNL RH-TRU sludges, which showed that the primary uranium isotope present in these sludges is U-238 (not U-235, as reported in their previous Integrated Data Base (IDB) submittals). The uranium curies reported for RH-TRU waste in previous ORNL IDB submittals were redistributed based on the new sludge sampling data. This corrected the previously high estimates of U-235 in the ORNL RH-TRU waste inventory. DOE/CAO-95-1121[17] provides additional information about RH waste radionuclide inventory. Since approximately 96.5 percent of the total RH-TRU curies is contributed by Cs-137, Sr-90, Ba-137m, Pu-241, and Y-90, the remaining radionuclides contribute a very small fraction of the total curies for the repository.

The "Working Agreement for Consultation and Cooperation" (WACC)[15] limits the RH-TRU inventory to approximately 7,080 cubic meters (250,000 cubic feet) (DOE State of New Mexico, 1981), while the WIPP WACC for RH-TRU waste volumes and the WIPP Land Withdrawal Act[14] limit the activity of RH-TRU waste allowed in WIPP to 5.1 million curies and the activity concentration of RH waste to 23 Ci/liter (Public Law, 102-579)[16].

RH-TRU typically contains a greater proportion of fission and activation products that produce highly penetrating radiation and a higher level of radiation at the surface of the package than CH-TRU.

5.1.2.1.2 RH Radionuclide Inventory for Safety Analysis Calculations

Background

The establishment of a waste container radionuclide inventory (CI) for use in accident analysis calculations must involve: (1) an evaluation of existing safety analysis orders and guidance documents to establish the appropriate level of conservatism for the CI for safety analysis calculations; (2) consideration of the projected waste inventory listed in Appendix A, and the desire to encompass as much of the Pu-239 and Pu-238 waste as possible with the least design or operational impacts to both the waste generator and the WIPP; and (3) evaluation of the existing RH WAC[10] transportation constraints on nuclear criticality and Thermal Power criteria. The adequacy of the WIPP facility design, and operational administrative controls is evaluated in detail in Section 5.2.4.

Each Pu-mix will be scaled to the RH WAC[10] nuclear criticality limit of 325 fissile gram equivalent (FGE) for a RH 72-B waste canister and 200 FGE for a 55-gal drum in a 10-160B cask, using the isotopic weight distributions and converted to PE-Ci (see Appendix B for a discussion of the PE-Ci concept). Additionally, the maximum fissile loading will be no greater than 325 FGE per facility canister.

The 10-160B cask certification requirements, limit the decay heat from all drums in the cask to 100 watts per cask. The WIPP RH WAC Thermal Power transportation requirements, limit the decay heat from all RH-TRU waste to 300 watts per 72-B waste canister. However, based on previous discussions, for the predominant Pu-239 weapons grade operations waste, the most restrictive of the applicable WIPP RH WAC criteria is the nuclear criticality criterion, which restricts a single canister to 325 FGE.

Past WIPP safety analyses have established a waste container radionuclide inventory (CI) for use in accident analysis calculations based on inventory information from generator sites and on an average or representative content of a RH waste container. Discussions between DOE and the generator sites resulted in an agreement of plutonium-239 equivalent curies (PE-Ci) limits for the 72B canister. A 72B canister that contains direct loaded waste has a PE-Ci limit of 80 PE-Ci while a 72B canister that contains three 55-gal drums of waste (double confined waste) has a PE-Ci limit of 240 PE-Ci.

PE-Ci limits for the 10-160B cask of 20 PE-Ci are set in the NRC Certificate of Compliance.[13] A single drum (55 gal) in the 10-160B cask could contain up to 20 PE-Ci.

Approach for Developing the Waste Canister Radionuclide Inventory for Safety Analysis Calculations

RH 72-B cask waste shipments to the WIPP are comprised of a DOT Type A (or equivalent) canister per cask. Accident scenarios involve damage to the waste canister. Since the MAR for an accident scenario is a function of the number of waste canisters assumed damaged in the scenario and their individual radionuclide CI (MAR = CI * (number of containers damaged)), deriving a reasonable maximum for MAR must also involve deriving a reasonable maximum for CI, as well as the distribution of PE-Ci contents in the individual waste canisters assumed to be involved or damaged.

10-160B cask shipments to the WIPP meets the certification requirements for DOT Type B shipping containers. The drums in the 10-160B cask (maximum of 10) meet the certification requirements for DOT Type A (or equivalent) shipping containers. Accident scenarios involve damage to the 10-160B cask, its load (55-gal drums), or facility canister containing a maximum of three 55-gal drums from a 10-160B cask. Since the MAR for an accident scenario is a function of the number of 10-160B casks, 55-gal drums, or facility canisters assumed damaged in the scenario and their individual radionuclide CI (MAR = CI * (number of containers damaged)), deriving a reasonable maximum for MAR must also involve

deriving a reasonable maximum for CI, as well as the distribution of PE-Ci contents in the individual 10-160B cask, drum, and facility canister assumed to be involved or damaged.

Based on the data in Appendix A, the average MAR in a waste canister is about 3.3 PE-Ci. The 72-B waste canister has a "bounding" inventory of either 80 PE-Ci (direct loaded canister) or 240 PE-Ci (loaded with three 55-gal drums). These values were selected to account for variations in the radionuclide content of the waste canisters. For the 10-160B cask, a "bounding" inventory of 20 PE-Ci for a 10-160B cask or a single 55-gal drum in the cask and 60 PE-Ci for a facility canister loaded with three 55-gal drums from three 10-160B casks.

The adequacy of these assumptions and the WIPP RH TRU facility design basis are evaluated in detail based on the accident results in Section 5.2.4. Receipt of waste for disposal at WIPP that does not meet the applicable Operations and Safety Requirements of the WIPP RH WAC will first require the performance of an Unreviewed Safety Question Determination (USQD) in accordance with the requirements of 10 CFR 830.203, Unreviewed Safety Question Process.[18]

5.1.2.2 TRU Mixed Waste

Hazardous waste, as defined in 40 CFR 261, Subparts C and D,[19] often occurs as co-contaminants with TRU waste from defense-related operations, resulting in TRU mixed waste. The BIR[17] estimates the quantities of Resource Conservation and Recovery Act (RCRA) regulated TRU waste to be shipped from each generator site. The most common hazardous constituents in the TRU mixed waste consist of the following:

Metals

Some of the TRU mixed waste to be emplaced in the WIPP facility contains metals for which toxicity characteristics were established (EPA hazardous waste codes D004 through D011). These materials are known to be present based on acceptable knowledge of waste-generating processes and various analytical results used to verify acceptable knowledge. Cadmium, chromium, lead, mercury, selenium, and silver are present in discarded tools and equipment, solidified sludges, cemented laboratory liquids, and waste from decontamination and decommissioning activities. A large percentage of the waste consists of lead lined glove boxes, leaded rubber gloves and aprons, lead bricks and piping, lead tape, and other lead items. Lead, because of its radiation-shielding applications, is the most prevalent metal present.

Halogenated Volatile Organic Compounds

Some of the mixed waste to be emplaced in the WIPP facility contains spent halogenated organic solvents (EPA hazardous waste numbers F001 through F005). The presence of these compounds is confirmed by analytical results from headspace gas sampling of TRU mixed waste. Methylene chloride; Tetrachloroethylene; trichloroethylene; carbon tetrachloride; 1,1,2-trichloro-1,2,2-trifluoroethane; and 1,1,1-trichloroethane (EPA hazardous waste codes F001 and F002) are the most prevalent halogenated organic compounds identified in TRU mixed waste that may be managed at the WIPP facility during the Disposal Phase. These compounds are commonly used to clean metal surfaces prior to plating, polishing, or fabrication; to dissolve other compounds; or as coolants. Because they are highly volatile, only very small amounts typically remain on equipment after cleaning, or in the case of treated wastewaters, in the sludges after clarification and flocculation.

Nonhalogenated Volatile Organic Compounds

Xylene, methanol, and n-butanol are the most prevalent non-halogenated VOCs in TRU mixed waste that may be managed at the WIPP facility during the Disposal Phase. These compounds occur in TRU mixed waste materials in much smaller quantities than halogenated VOCs. Like the halogenated VOCs, they are used as degreasers and solvents, and are similarly volatile. The same analytical methods that are used for halogenated VOCs are used to detect the presence of non-halogenated VOCs.

DOE Specific Processes and Activities

TRU mixed waste generated at DOE sites results from specific processes and activities that are well-defined and well-controlled, enabling the DOE to characterize waste streams on the basis of knowledge of the process and the raw materials used. Examples of the major types of operations that generate TRU mixed waste include:

Production of Nuclear Products - Production of nuclear products includes reactor operation, radionuclide separation/finishing, and weapons fabrication and manufacturing. The majority of the TRU mixed waste was generated by weapons fabrication and radionuclide separation and finishing processes. More specifically, wastes consist of residues from chemical processes, air and liquid filtration, casting, machining, cleaning, product quality sampling, analytical activities, and maintenance and refurbishment of equipment and facilities.

Plutonium Recovery - Plutonium recovery wastes are residues from the recovery of valuable plutonium contaminated molds, metals, glass, plastics, rags, salts used in electrorefining, precipitates, firebrick, soot, and filters.

Research and Development (R&D) - R&D projects include a variety of Hot Cell or glove box activities that often simulate full-scale operations described above, producing similar TRU mixed wastes. Other types of R&D projects include metallurgical research, actinide separations, process demonstrations, and chemical and physical properties determinations.

Decontamination and Decommissioning - Facilities and equipment that are no longer needed or usable are decontaminated and decommissioned, resulting in TRU mixed wastes consisting of scrap materials, cleaning agents, tools, piping, filters, Plexiglas™, glove boxes, concrete rubble, asphalt, cinder blocks, and other building materials. This is expected to be the largest category by volume of TRU mixed waste to be generated in the future.

Hazardous Constituents

Hazardous constituents in TRU mixed wastes to be shipped to the WIPP may exist in both the gaseous and solid states within the waste containers. For potential accident scenarios involving the breach of waste canister, knowledge of the hazardous materials in the gaseous state is necessary. Information on RH headspace gas concentrations is not available at this time and will not be available until the generator sites begin to package and characterize their RH waste. Therefore, information taken from the Hazardous Waste Facility Permit (HWFP)[20] for Contact Handled (CH) waste is assumed to be the same as for RH TRU and will be used in analyzing potential waste canister breach/puncture scenarios. (Headspace is the void surrounding the waste). This assumption is considered conservative because the total volume of RH waste will be less that five percent of the total TRU waste in the repository and the contribution of VOC's from RH may be minimal in relation to the contribution of VOC's from CH TRU.

Analytical data on the concentrations of 29 VOCs in the headspace gases has been calculated and is summarized in the HWFP, Table VI.D[20]. The most prevalent VOCs observed in the headspace gases are methylene chloride, chloroform, 1,1,2,2-tetrachloroethane, and carbon tetrachloride. Methylene chloride and carbon tetrachloride, and chloroform are considered potential carcinogens and require further analyses of the potential exposures during accident conditions. Methylene chloride, carbon tetrachloride, chloroform, and 1,1,2,2-tetrachloroethane are selected (due to prevalence) for consideration for accidental releases involving the release of headspace gases (Table 5.1-2).

Fire scenarios require knowledge of the hazardous materials in the solid/liquid state. The BIR,[17] indicates that the largest volume of existing TRU mixed waste is from the Idaho National Engineering and Environmental Laboratory (INEEL). The INEEL Hazardous Stored TRU Waste Source Term for the Radioactive Waste Management Complex Transuranic Storage Area[21] is used to develop the total waste container non-radioactive hazardous material inventory (Table 5.1-3).

The waste that will come to WIPP will be addressed by programs at the TRU waste generator sites that implement WIPP requirements. These programs will include the requirements of the Waste Analysis Plan (WAP) found in the HWFP, Chapter C.[20] The WAP defines the required waste characterization activities to be performed by the TRU waste generator sites. Every container of waste that will be shipped to WIPP will also meet the certification requirements contained in the WIPP RH WAC.[10] These criteria ensure that the waste is compatible with the transportation, management, and long-term disposal requirements for the WIPP.

The RH WAC [10] requires the generator to prepare a waste certification program that lists the methods and techniques used for determining compliance with the RH WAC [10] and associated quality assurance and quality control (QA/QC) criteria. The RH WAC [10] contains the health and safety based limits that the waste must meet for acceptance by WIPP. Also, the RH WAC [10] contains transportation related limits based on the Certificate of Compliance for the RH road casks (NRC) and for hazardous waste (EPA).

Waste Acceptance

Waste acceptance refers to the process whereby a final determination is made, on a container-by-container basis, that waste can be managed at WIPP in a manner that is protective of human health and the environment, and is in compliance with the regulations. Waste that is finally accepted for disposal at WIPP will have undergone the screening scrutiny required by WIPP programmatic documents. This means that waste must meet the requirements of the WIPP RH WAC[10] and Chapter C of the HWFP.[20] These programmatic documents require that data collected regarding the waste be verified at the point of generation, by the generating site project office, and then again by WIPP. The RH WAC establishes minimum criteria that the waste must meet, and limits that cannot be exceeded in order to maintain health and safety parameters. The following waste is unacceptable for management at the WIPP facility:

Ignitable, reactive, and corrosive waste

Liquid wastes (all waste must meet the RH WAC[10] criteria regarding residual liquid content)

Compressed gases

Incompatible waste (waste must be compatible with backfill, seal and panel closure materials, canister, road cask, facility cask, and as well as with other waste)

Headspace-gas VOC concentrations resulting in average annual emissions not protective of human health and the environment

Wastes with EPA codes not listed on HWFP, Table II.C. [20]

The WIPP facility will not accept waste that exhibits the characteristics of ignitability, reactivity, or corrosivity. The DOE ensures through administrative and operational procedures at the generator sites that TRU mixed waste received at the WIPP facility does not exhibit these characteristics. These characteristics are generally associated with liquid wastes or specific waste forms that may react violently. The HWFP, Chapter C,[20] and the RH WAC,[10] prohibit liquid waste, explosives, compressed gases, oxidizers, and pyrophorics. The prohibition of these materials is key to limiting the hazards associated with WIPP RH TRU waste handling activities.

The TRU mixed waste received at WIPP will not be aqueous or liquid, will not contain RH WAC prohibited materials, and will be capable of being handled at standard temperatures and pressures without reaction to oxygen or water. The RH WAC[10] specifies that liquid waste is not acceptable at WIPP. The WIPP facility will not accept RH casks holding waste that would be considered a liquid waste. Every 72-B canister holding waste shall contain less than 1.58 gal (6 L) of residual liquid. Every 10-160B drum (55-gallon) holding waste shall contain less than 0.53 gal (2L) of residual liquid. Each 72-B canister or 10-160B drum must contain as little residual liquid as is reasonably achievable.

Additionally, TRU mixed waste cannot contain explosives, compressed gases, oxidizers, or non-radionuclide pyrophoric materials. (Waste generators have submitted information on waste streams based on known waste generation processes that indicate certain waste streams may have the potential for reactivity, ignitability, or corrosivity.) These characteristics must be eliminated prior to waste acceptance for disposal at the WIPP.

The WIPP will manage TRU mixed waste in a manner that mitigates the buildup of explosive or flammable gases within the waste. Containers are vented through individual particulate filters, allowing any gases that are generated by radiolytic and microbial processes within a waste container to escape; to prevent over pressurization.

The WIPP facility is designed to manage only compatible waste. Therefore, a compatibility analysis was performed to identify potential incompatibilities for all defense generated TRU mixed waste reported in the BIR.[17] Wastes were screened for incompatibilities based on their chemical content and physical waste form. The compatibility analysis also took into account waste compatibility with various aspects of the repository such as shaft, seal, and panel closure materials, backfill, and fire suppressant materials.

To ensure the integrity of the WIPP facility, waste streams identified to contain incompatible materials or materials incompatible with waste canisters cannot be shipped to WIPP unless they are treated to remove the incompatibility. Only those waste streams that are compatible, or have been treated to remove incompatibilities, will be shipped to WIPP.

The DOE will only allow generators to ship those waste streams with EPA hazardous waste codes listed in Chapter A of the HWFP.[20] Characterization of all waste streams will be performed as required by the WAP. If during the characterization process, new hazardous waste codes are identified, those wastes cannot be accepted for disposal at the WIPP facility until a permit modification has been submitted and approved. Similar waste streams at other generator sites will be examined more closely to ensure that the newly identified code does not apply. If other waste streams also require a new hazardous waste code, shipment of these waste streams will also cease until a permit modification has been submitted and approved. Approval will be based on the physical and chemical properties of the waste.

The RH WAC requires the following information about the waste to be shipped to WIPP: radionuclide identification and quantities; confirmation of the waste form, identification, and indication that no excluded items have been detected; identification of the RCRA constituents identified from headspace

gas analysis; totals analysis of homogeneous waste. The RH WAC also requests other information that is required for transportation, safe handling, and disposal of the waste.

5.1.3 RH Hazard Categorization

The hazard categorization for the RH TRU Waste Handling Process was developed based on the methodology and requirements in DOE-STD-1027-92,[2] which requires that a nonreactor nuclear facility be placed in a hazard category based on the unmitigated release of material from the facility. The material then is compared against threshold quantities (TQs) identified in Attachment 1 of DOE-STD-1027-92.[2]

The maximum RH waste container radionuclide inventory, developed in Section 5.1.2 and Table 5.1-1, susceptible to an unmitigated accidental release is 240 PE-Ci for the 72-B cask and 20 PE-Ci for the 10-160B cask. Since the 72B cask quantities exceed the Hazard Category 3 threshold of 56 Ci for Pu-239 (Attachment 1 of DOE-STD-1027-92[2]) the WIPP is classified overall as a Hazard Category 2 facility.

5.1.4 Hazard Evaluation

The WIPP RH TRU handling processes were qualitatively evaluated using HAZOPs [4 &5] (summarized in Appendix C). This systematic approach to hazard analysis is conducted by a leader knowledgeable in the HAZOP methodology, and consists of a team of personnel from various disciplines familiar with the design and operation of the RH TRU handling processes (HAZOP Team). The HAZOP Teams identified deviations from the intended design and operation of the waste handling system that could: (1) result in process slowdown or shutdown, (2) result in worker injury or fatality, and (3) result in the release of radiological and non-radiological hazardous materials from a waste canister.

The HAZOP Teams assigned a qualitative consequence and frequency ranking for each deviation. A hazard evaluation ranking mechanism utilized the frequency and the most significant consequences to separate the low risk hazards from high risk hazards that may warrant additional quantitative analysis. Based on this ranking approach, a basic set of accidents was chosen for further quantitative assessment in Section 5.2 to: (1) verify and document the basis for the qualitative frequency and consequence assignments in the HAZOP, and (2) identify the need for Design Class I (safety-class) structures, systems, or components (SSCs) and Technical Safety Requirements (TSRs).

The HAZOPs replace previous hazards analyses contained in documentation including the FEIS,[6] SEIS,[7] and WIPP FHRA,[8] for the purposes of identifying initiating events for quantitative accident analysis in Section 5.2. However, these documents were reviewed in preparation of this section, to ensure that all hazards associated with RH TRU waste handling were identified in the HAZOPs.

Since the performance of the HAZOPs for the RH waste handling processes, the WIPP Fire Hazard Analysis (FHA)[9] has been updated to incorporate both the 72B and 10-160B waste handling processes and to meet the requirements of DOE Order 420.1.[22]

The RH HAZOPs evaluated the WHB waste handling equipment fires, and fires associated with diesel powered waste handling equipment in the Underground as low frequency, low consequence events. Such fires may lead directly to waste handling equipment failure, or small fires impacting waste canisters, both of which may lead to a release of radionuclides. The updated FHA [9] investigated the increased potential for fires resulting from the introduction of the additional fuel and ignition source of the diesel powered vehicle in the waste panels.

5.1.4.1 HAZOP Methodology

The purpose of this study was to carefully review the RH TRU Waste Handling System and its operation in a systematic fashion to determine whether process deviations can lead to undesirable consequences. To meet this purpose, the HAZOP analysis technique was selected in accordance with guidance found in Figure 5.3 of Guidelines for Hazard Evaluation Procedures.[23]

The following characteristics relative to the RH 72-B and 10-160B waste handling processes analysis were identified:

- The results of the studies included specific accident situations plus safety improvement alternatives
- Both equipment failure and human error were evaluated
- The studies focused on single failure events
- The processes involved some relatively complex equipment operations
- The processes are not operating at the present, but relatively detailed design information is available.

An in depth description of the 72-B HAZOP can be found in Section 3.1 of DOE/WIPP-99-2303, Hazard Analysis Results Report for Remote Handled Waste,[4] while an in depth description of the 10-160B HAZOP can be found in Section 3.1 of WSMS-WIPP-00-0006, Hazard and Operability Study for the 10-160B Cask Remote Transuranic Waste Handling System (RH).[5]

Participant Selection

Support of these analyses included two levels of participation: (1) The Core Teams consisted of personnel from the WIPP facility and from Westinghouse Safety Management Solutions; and (2) Subject matter experts/consultants from the WIPP facility.

Core Teams - The HAZOP Core Teams (Team) were selected to provide experience in the HAZOP technique and to provide expertise in overall facility design, operation, and safety. The Team's tasks were to perform the major portion of the analysis, i.e., develop deviations, identify causes for those deviations, list consequences, identify safeguards, and recommend follow-up actions if the safeguards were judged to be inadequate. The individuals on both teams were full-time participants in the HAZOP processes.

Subject Matter Experts - Subject matter experts were identified to participate in the HAZOPs in the event that specific questions related to design or operation arose and more detailed information or answers were needed. These individuals were generally part-time participants but were available to participate as necessary.

Application of Technique

The first step in applying the HAZOP technique was to determine how the facility would be sectioned, i.e., identify the "study nodes". Because of the continuous flow characteristics of the process, the Team agreed that identifying study nodes in the form of process steps and specific functions of those steps would be appropriate and would facilitate identification of deviations. The study nodes or process steps and functions associated with 72B cask are shown in DOE/WIPP-99-2303[4], while those for the 10-160B cask are shown in WSMS/WIPP-00-0006[5].

The next step was to define the deviations from the intended function that could occur at each study node or process step. A combination of application of guide words and the knowledge based approach (see Section 3.1 of DOE/WIPP-99-2303[4] and WSMS-WIPP-00-0006[5]) was used to identify the deviations. The HAZOP Teams agreed that with the exception of the natural phenomena and external events for which specific frequencies had already been determined, event initiators would be considered to occur with a frequency in the "anticipated" range (see Table 5.1-4). The frequencies for the natural phenomena events and external events were listed as identified in DOE/WIPP-95-2065.[24] The deviations identified for each study node are listed in Appendix C.

Following identification of the deviations, causes and unmitigated consequences of those deviations were listed. As part of the qualitative determination of the consequences of each event, credit was taken initially only for the confinement and/or shielding expected to be provided by the road casks, the canisters, the drums, the facility cask, the Hot Cell and the WHB. No other preventive or mitigative features were assumed to be in place for determination of consequences.

The consequences that were listed for each deviation identified in the HAZOPs were then "ranked" qualitatively using two sets of criteria. The first ranking was a "total rank" which included both radiological and non-radiological consequences. This ranking process used a two number system consisting of a qualitative unmitigated consequence based on the criteria given in Table 5.1-5, and a frequency ranking based on the levels given in Table 5.1-4. As stated previously, the frequency for all event initiators, with the exception of natural phenomena and external events, was considered to be in the "anticipated" range. This resulted in the "total rank" which is recorded in Appendix C.

The "total" ranking for each deviation included both the resultant non-radiological and radiological consequences to the workers, the facility, and the offsite public. The possibility of worker fatality from a non-radiological accident resulted in the assignment of the highest possible consequence ranking of four. The purpose of this initial ranking was to provide an indication of those areas where there was a potential to improve the level of general industrial safety for facility workers.

The purpose of the second ranking was to identify those accidents that would pose the greatest radiological risk to the public, onsite workers, and the environment. This second ranking was based on the "radiological rank" consequence criteria given in Table 5.1-6. The radiological ranking was qualitatively estimated for each of three receptors: 1) the immediate worker, 2) the non-involved worker, and 3) the offsite maximally exposed individual (MEI).

The ultimate intent of the radiological ranking was to provide a means to select those potential accidents that would be of sufficient concern to be carried forward for quantitative accident analysis. For selection of candidate events for quantitative analysis, the consequences of each deviation were examined to focus only on risk posed by the accidental release of radiological material to the offsite individual. The results of this ranking are listed in Appendix C using the same two number system and format as that used for the total rank: consequence first, frequency second.

HAZOP Assumptions

The following assumptions were made for the HAZOP evaluation of RH waste handling operations:

- The WHB is designed adequately to withstand Natural Phenomena Hazards (NPH) events
- The WHB is Design Basis Earthquake (DBE) and Design Basis Tornado (DBT) qualified. [28]
- The RH bay outer doors will not be open when there are unsealed road casks containing RH TRU waste canisters/drums in the RH bay.
- The 140/25-ton crane in the RH Bay is qualified for DBE and DBT.[27]
- The Hot Cell is qualified for both DBE and DBT.
- The Hot Cell crane is DBE qualified. [27]
- Hot Cell shielding is designed for an internal gamma surface dose rate of 400,000 Rem/hr and for internal neutron surface dose rate of 45 Rem/hr. [26]
- The Hot Cell PAR® Manipulator is DBE qualified.
- Hot Cell concrete structure prevents fire from spreading into or out of the Hot Cell.
- The Transfer Cell will be maintained within the radiological control limits described in Appendix D of 10 CFR 835[11]. This means that if the Transfer Cell becomes contaminated during the RH waste handling process, operations will be stopped (when it is safe to do so) and will not resume until the room is decontaminated and once again meets the radiological control limits referenced above.
- There will be a catch pan (capacity of about 45 gal [170 L]) in the Facility Cask Loading Room to collect any hydraulic fluid that leaks from the equipment (reservoir capacity of 40 gal [151.4 L]).
- Fires that initiate in areas not defined as processing areas within the WHB will not have sufficient energy to propagate to areas defined as processing areas.[9]
- All RH waste that arrives at the WIPP site is in proper container and meets the RH WAC[10].
- Shipment of RH waste to the WIPP site is by truck only, not rail.
- Road casks have not been damaged in transit.
- Shielding will protect workers as designed.
- Industrial accidents are covered by MSHA and OSHA Industrial Safety programs.
- Deliberate unauthorized acts (e.g., sabotage) are addressed in the WIPP security program and therefore, are excluded from this analysis.
- There is no criticality concern related to the RH waste handling process. The waste material in a canister cannot shift into a configuration which could result in a criticality.
- No hazardous chemicals are used in the RH waste handling process.
- The hazardous chemical concentration including VOCs present in the RH waste is assumed to be the same as the hazardous chemical concentration present in the CH waste.[24] This assumption is used because there is no information available at this time for RH VOC concentrations.

- From a long term gas generation standpoint, RH waste is assumed to have the same composition as CH waste. Therefore, the hazardous gas generation rate for RH waste after panel closure will be the same as that for CH waste (0 - 0.04 moles/kg-yr with expected values of 0.02 moles/kg-yr)[30].
- The 72B casks meet the certification requirements for DOT Type B shipping containers (10 CFR 71.71-73[30]) and will withstand DBTs and explosions (maintain containment of contents).
- The 72 B canisters meet the certification requirements for DOT Type A (or equivalent) shipping containers.
- All 72-B canisters are vented; the vents will be functional under normal and abnormal conditions.
- There is no criticality concern related to disposal of 72B cask TRU waste at the WIPP site provided that the 72B waste canisters meet the following requirements:
    - The maximum fissile loading will be no greater than 325 grams per canister. [29]
    - The canister in the Transfer Cell will remain sub-critical under all normal and abnormal conditions.[29]
    - The 72B canisters are to be stored in horizontal positions in the walls of the Underground storage area. The boreholes shall not be placed any closer together than 30 inches center-to-center).[29]
- The exposure rate at the surface of an unshielded 72B canister will be no greater than 1000 rem/hr (10 Sv/hr).
- Verification of 72B canister identification in the Transfer Cell will be done remotely.
- The maximum radioactivity for the 72-B canister in terms of Pu-239 Equivalent Activity (PE-Ci) is 80 PE-Ci/canister for direct loading and 240 PE-Ci/canister for double contained RH waste (loaded with three 55- gal drums).
- The consequences of a radiological release from a RH 72-B waste canister are significantly greater than the toxicological consequences. Therefore, any toxicological consequences resulting from a release of material from a RH 72-B waste container are considered to be bounded by the radiological consequences.
- RH 72-B waste handling operations will be performed only in the areas described in Section 2.2 of DOE/WIPP-99-2303.[4]
- The 10-160B cask meets the certification requirements for DOT Type B shipping containers (10 CFR 71.71-73) and will withstand DBTs and explosions (maintain containment of contents). [13]
- Drains are located on the bottom of the 10-160B cask lower impact limiter such that no liquid can accumulate in that impact limiter.
- The drums (max 10) in the 10-160B cask meet the certification requirements for DOT Type A shipping containers (49 CFR 178.350).
- There is no criticality concern related to the 10-160B cask provided the mass limits of 10 CFR 71.53 [13] are not exceeded.
- The tools used to vent the 10-160B cask have HEPA filtration.
- It is assumed that the facility canister has an equivalent design to the 72B waste canister

- The exposure rate inside of one (1) 10-160B cask will be no greater than 1000 Rem/hr. For conservative analysis, it is assumed that one (1) drum contains all 1000 Rem/hr. Remaining drums contain none.
- There is no criticality concern related to disposal of 10-160B cask TRU waste at the WIPP site provided that the facility canister meets the following requirements:
  - The maximum fissile loading will be no greater than 325 grams per facility canister.
  - The facility canister in the Transfer Cell will remain sub-critical under all normal and abnormal conditions.[29]
  - The facility canisters are to be stored in horizontal positions in the walls of the Underground storage area. The boreholes shall not be placed any closer together than 30 inches, center-to-center.[29]
- The maximum radioactivity of one (1) 10-160B cask is 20 Pu-239 equivalent curies (PE-Ci). For events involving a breach of one (1) drum, it is assumed that all 20 PE-Ci are released.
- All drums in a 10-160B are vented; the vents will be functional under normal and abnormal conditions.
- Verification of 10-160B waste drums identification in the Hot Cell will be done remotely.
- The consequences of a radiological release from a 10-160B waste container (cask, facility canister or drum) are significantly greater than the toxicological consequences. Therefore, any toxicological consequences resulting from a release of material from a 10-160B waste container are considered to be bounded by the radiological consequences.
- 10-160B cask waste handling operations will be performed only in the areas described in Section 2.2 of WSMS-WIPP-00-0006.[5]
- Facility cask will shield 7,000 Rem/hr to 200 mrem/hr on contact. [25]
- The facility cask will maintain its containment and shielding function when dropped in a horizontal orientation from a height of 48 in (1.2 m).
- Based on the design features of the facility cask, it is assumed that the facility cask will maintain its structural integrity and containment function if it is impacted by the forklift or if it is involved in a collision with another vehicle while it is being transported by a forklift.
- RH storage locations are filled before CH waste is introduced to the disposal room.
- The exposure rate at the surface of a72-B cask , a 10-160B cask, or facility cask will be no greater than 200 mrem/hr (2 mSv/hr).[27]

HAZOP Results and Conclusions

The HAZOP Team reviewed the WIPP RH TRU Waste Handling System to identify hazards associated with the process, and deviations from the intended design and operation that could result in adverse consequences to the public, the worker, and the environment.

General areas of concern identified include:

Fires
Explosions
Internal and external conditions that may lead to a breach or rupture of the 10-160B cask, drums, facility canister and 72B waste canisters which could result in the airborne release of radiological materials.
Direct radiological exposure of personnel to high radiation and airborne radiological activity.
Worker injury or fatality.
External waste container surface contamination and need for decontamination.
Major damage to equipment and facility.
Major disruption of process operations.

The consequences of each deviation were developed without mitigating systems in place (with the exception of the confinement and/or shielding provided by the casks, canisters, and the WHB) and are listed in Appendix C. Appendix C also provides a listing, identified by the HAZOP Team, of the substantial safeguards currently existing at the WIPP facility to reduce the likelihood of the identified deviations and to mitigate the consequences of such deviations. Identified safeguards include design features such as radiation shielding, building structure, ventilation system, and casks; administrative control features such as procedures, worker training, preventive maintenance and inspection programs, and the WIPP RH WAC.[10]

5.1.4.2 Selection of RH Potential Accidents

To assess the relative radiological risk to the offsite individual, the frequency and radiological consequence rankings for that receptor were "binned" using the Risk Ranking Matrix given in Table 5.1-7. The resulting risk in each case was categorized as acceptable (having low risk), moderate, or high as defined on the matrix. Those deviations which had an offsite ranking with a frequency and consequence combination that is in the matrix area, or "bin", indicating low risk and concern were excluded from further consideration for quantitative evaluation. The events which impact the offsite public and have risk that falls in the darker shaded area on the risk matrix should be considered "situations of major concern" as described in DOE-STD-3009-94,[3] with sufficiently high risk that these events might be considered "unique" and individual examination might be used in the accident analysis phase. The events that impact the offsite individual and fall in the lighter shaded area in Table 5.1-7 are considered "situations of moderate concern" that yield a subset of "representative" events needing further examination. Representative events bound a number of similar events of lesser risk (the worst fire for a number of similar fires). At least one event from each of the event types is considered representative. Representative events are examined only to the extent that they are not bounded by unique events.

Table 5.1-8 lists the deviations considered to have a "radiological rank" which indicated moderate (lighter shaded area on Table 5.1-7) or high risk (darker shaded area on Table 5.1-7) to the offsite individual as determined by the binning process. The 17 hazardous events were selected as potential candidates for quantitative analysis. The frequency of an aircraft crash into WHB (hazardous event 13-7 in Table C-1) is beyond extremely unlikely based on the physical size of the WHB and the frequency of the flights within 5 miles of WIPP[24]. The consequences of the Underground Roof Fall[31] (hazardous event 14-1 in Table C-1) are negligible to the public and onsite worker, and low to immediate worker because of the storage location and design of the RH 72-B waste canister and the facility canister.

After examining the nature of the 17 individual hazardous events selected as candidates for quantitative analysis, and for minimization of repetitiveness, the events were grouped into "categories" of events with similar characteristics. The grouping resulted in 9 specific accidents (72-B) and 8 specific accidents (10-160B) that would be analyzed quantitatively. The accidents are listed in Table 5.1-9.

Following the ranking and binning process, applicable safeguards were identified for each event. Once the existing protection was identified, the adequacy of that protection was qualitatively judged. Based on the level of protection provided by the existing controls, follow-up items were listed in the form of Action Items or Recommendations. Action Items are those items which, in the judgement of the HAZOP Team, must be implemented to increase the safeguards or to verify the function of existing safeguards. Recommendations are those items which, in the judgement of the Team, would enhance the existing safeguards and must be addressed, but not necessarily implemented. Implementation of Recommendations is, however, strongly encouraged. The Action Items and Recommendations are summarized in Tables 8 and 9 respectively of DOE/WIPP-99-2303[4] and WSMS-WIPP-00-0006.[5]

5.1.5 Prevention of Inadvertent Nuclear Criticality

The intent of a criticality safety program is to prevent the accumulation of fissile and fissionable material and neutron moderating or reflecting materials in quantities and configurations that could result in an accidental nuclear criticality.

To ensure adequate margins of criticality safety for adherence to DOE O 420.1,[22] the WIPP facility was designed so that during each operation involving fissile material K_{eff} does not exceed a value of 0.947 (at the 95 percent probability level) for the most reactive set of conditions considered credibly possible. The calculation of K_{eff} includes the effect of neutron interaction and reflection between fissile elements and dimensional variations resulting from fabrication tolerances and changes due to corrosion and mechanical distortion. As discussed below, these calculations indicate the combination of conditions enabling the K_{eff} limit of 0.947 to be exceeded for the RH waste forms handled at the WIPP facility is incredible.

5.1.5.1 WIPP Nuclear Criticality Safety Program Elements

The WIPP nuclear criticality program elements consist of mass limits control, TRU waste disposal configuration control, and analytical verification of subcriticality.

Mass Limits Control

The WIPP RH WAC[10] limits the fissile or fissionable radionuclide content of RH TRU waste, including allowance for measurement errors, to 325 Fissile-Gram Equivalent (FGE) for a RH waste canister.

TRU Waste Disposal Configuration Control

In addition to the mass limits control, geometry controls are required for the emplacement and/or in-transit handling disposal configurations. Canisters will be stored in horizontal positions in the walls of the Underground disposal rooms with an analyzed minimum center-to-center spacing of 30 in (76 cm).[29]

RH TRU Nuclear Criticality Safety Analysis

In compliance with DOE O 420.1,[22] a criticality analysis[29] was performed to ensure that no credible criticality accident could occur at the WIPP. The analysis was based on the mass limit control and geometry control, with additional conservative assumptions in terms of; isotopic content, density and configuration modeling, moderation, and reflection. Further, for the RH waste analysis, it was assumed that the waste package storage array is infinite in both horizontal directions.

The results of the WIPP RH TRU criticality analysis[29] indicate that, for each of the conditions analyzed, the calculated effective multiplication factor, K_{eff}, is less than 0.95 including uncertainties at 95 percent probability at 95 percent confidence level. Accordingly, no credible criticality hazard exists at the WIPP for RH TRU operations.

DOE Order 420.1[22] requires additional analysis of nuclear criticality safety. The WIPP RH TRU criticality analysis [29] was examined for compliance with the order and all the applicable requirements for the order in performance of criticality analysis were complied with within the analysis.

5.1.5.2 Compliance with Mandatory ANSI/ANS Standards

The existing WIPP nuclear criticality safety program elements were reviewed to ensure compliance with the six mandatory American Nuclear Society ANSI/ANS nuclear criticality safety standards as the Order requires. The six mandatory standards are: ANSI/ANS-8.1,[32] 8.3,[33] 8.5,[34] 8.7,[35] 8.15,[36] and 8.19.[37]

The WIPP nuclear criticality safety program elements are found to be in compliance with the requirements of ANSI/ANS-8.1, Nuclear Criticality Safety in Operations with Fissionable Materials Outside Reactors,[32] and ANSI/ANS-8.15, Nuclear Criticality Control of Special Actinide Elements,[36] in regard to: mass control, geometry control, and performance of criticality analyses.

The criticality-related administrative control provisions were determined to be in compliance with ANSI/ANS-8.19, Administrative Practices for Nuclear Criticality Safety.[37]

Since it has been established by analyses[29] that a criticality accident is beyond extremely unlikely (frequency ≤ 1 E-06/yr) at the WIPP, ANSI/ANS-8.3,[33] a Criticality Accident Alarm System, is not applicable as called for in the Order.

The two facility-specific standards, ANSI/ANS-8.5, Use of Borosilicate-Glass Raschig Rings as a Neutron Absorber in Solutions of Fissile Material,[34] and ANSI/ANS-8.7, Guide for Nuclear Criticality Safety in the Storage of Fissile Materials,[35] are not applicable to the WIPP.

The existing WIPP nuclear criticality safety program elements are in compliance with the DOE Order 420.1[22] mandatory criticality safety standards.

5.1.6 Defense-in-Depth

A defense-in-depth philosophy is employed in WIPP's approach to enhancing the safety of the facility in conjunction with its design and operations. The WIPP defense-in-depth safety approach provides layers of defense: (1) against release of radiological and non-radiological hazardous waste canister materials and the resultant consequences to the public and the environment, and (2) for protection of the worker against accidents. The WIPP approach provides three layers of defense against releases. Each successive layer provides an additional measure of the combined defense strategy.

The ultimate safety objective of the first, or primary layer of WIPP defense-in-depth is **accident prevention**. The reduction of risk (as the product of frequency and consequence) to both workers and the public from WIPP RH TRU waste handling and emplacement operations is primarily achieved by reducing the frequency of occurrence of postulated abnormal events or accidents. The conservative design of the facility's SSCs, with operations conducted by trained/qualified personnel to the standards set forth in approved procedures, provides the first layer. Specific preventative measures are identified in Appendix C for each postulated deviation as identified in the HAZOPs,[4,5] and in Table 5.1-10 for each deviation considered for quantitative accident analysis.

The occurrence frequency for each postulated deviation as identified in the HAZOPs,[4,5] and in Table 5.1-10 for each deviation considered for quantitative accident analysis, is primarily derived from the initiating event. To reduce the frequency of equipment failure, the facility design, fabrication, and construction will be undertaken in accordance with applicable codes and standards, based on the design classification of SSCs established in Chapter 4. Extensive pre-operational tests will be conducted to verify that SSCs perform their design function. This will be followed by in-service and pre-operational checks and inspections, and preventive maintenance and quality assurance programs.

The WIPP employs configuration management change control and modification retest to ensure quality throughout facility life. For hazards associated with underground operations, a substantial array of ground control planning and practices, support systems, instrumentation, monitoring, and evaluation exist to reduce the frequency of potential Underground accidents. Technical Safety Requirement (TSR) Administrative Controls (ACs) are derived in Chapter 6 and required in the WIPP TSR Document (Attachment 1 to the SAR) to ensure that the high level of design is maintained throughout the facility lifetime.

Additionally, as identified in the HAZOPs,[4,5] accident prevention for process inherent events, is achieved administratively through the RH WAC[10] which restricts waste elements (such as the presence of pyrophorics) which may be initiating events for accidents.

The following provide administrative controls to prevent the risk from postulated accidents from being unacceptable: (1) RH WAC limits on the radionuclide and fissile content of each waste canister, (2) waste canister integrity provisions ensure the robustness reflected in the waste canister accident release analyses, and (3) criticality safety is a designed in-storage and handling configuration that ensures (in conjunction with waste characteristics) that active criticality control is not required.

Prevention of human error as an initiating event is achieved by the extensive training and qualification programs, operational procedures, and conduct of operations programs. TSR ACs are derived in Chapter 6 and required in the WIPP TSR Document (Attachment 1 to the SAR) to ensure that these programs are maintained, and operations continue to be conducted with highly qualified and trained personnel using current approved procedures.

The second layer of defense-in-depth provides protection against anticipated and unlikely operational events that might occur in spite of the protection afforded by the first layer of defense. The second defense layer is characterized by detection and protection systems, and controls that: (1) indicate component, system, or process performance degradation created by compromises of the first layer, and (2) provide adequate mitigation and accommodation of the consequences of those operational accidents which may occur.

Specific mitigative features are identified in Appendix C for each postulated deviation as identified in the HAZOPs,[4,5] and in Table 5.1-10 for each deviation considered for quantitative accident analysis. In general, the WHB and underground radiation and effluent monitoring systems and HEPA filtration systems, and the WIPP Emergency Management Program[38] provide this layer of defense-in-depth. In addition, the WIPP Human Factors Evaluation,[39] determined that well established policies and procedures are in place ensuring normal and emergency procedures are implemented, adequate directions have been provided to shift personnel concerning actions to be taken in a potential accident environment, and adequate procedures are available for follow up response. TSR ACs are derived in Chapter 6 and required in the WIPP TSR Document (Attachment 1 to the SAR) supporting the second level of defense-in-depth. Programs supporting defense-in-depth as required by the TSRs, are discussed in Chapters 7, 8, and 9.

The third layer of defense-in-depth supplements the first two layers by providing protection against extremely unlikely operational, natural phenomenon, and external events. These events represent extreme cases of failures and are analyzed in Section 5.2.3 using conservative assumptions and calculations to assess the radiological and non-radiological effects of such accidents on the MEI, non-involved worker, and immediate worker to verify that a conservative design bases has been established. These accidents include fire, waste hoist failure, and breach of waste container.

5.1.7 Protection of Immediate Workers from Accidents

The RH HAZOPs [4,5] identified a number of waste handling process hazards that could potentially lead to events resulting in immediate worker injury or fatality, or exposure to radiological and non-radiological hazardous materials. The Total Rank (or risk) for each postulated deviation as identified in Appendix C, is the qualitative product of the frequency of the event and the potential consequences. As shown in Appendix C, the consequences of the postulated deviations were dominated by the assumption that a worker fatality may result without safeguards in place, regardless of dose or dosage received.

Consistent with: (1) 10 CFR 830.205, Technical Safety Requirements;[40] (2) the defense-in-depth philosophy discussed in Section 5.1.6; and (3) the philosophy of Process Safety Management (PSM), as published in 29 CFR 1910.119, Process Safety Management of Highly Hazardous Chemicals,[41] reduction of the risk to workers from accidents is accomplished at the WIPP primarily by identifying controls to **prevent the event from happening**. (note: Compliance with 29 CFR 1910.119 is not required by WIPP. However, the WIPP philosophy of reduction of accident risk is consistent with this standard.) The TSRs are not based upon maintaining worker exposures below some acceptable level following an uncontrolled release of hazardous material or inadvertent criticality; rather the risk to workers is reduced through the reduction of the frequency and potential impact of such events.

Consistent with this statement, in conjunction with the defense-in-depth philosophy, total risk is evaluated by: (1) performing engineering analyses in the form of event tree/fault tree analysis to identify systems, structures, components, processes, or controls that contribute most to the accident phenomena frequency for the purposes of verifying their adequacy or identifying improvements to reduce the accident frequency and therefore risk, and (2) evaluating human error as an initiating event.

As discussed in Section 5.1.4.1, the HAZOP Teams identified a significant number of existing preventative safeguards that lower the frequency of occurrence of each deviation, substantially reducing the risk of injury or fatality to workers. The HAZOP Teams concluded, consistent with the first layer of defense-in-depth, that safeguards currently exist at the WIPP to prevent or reduce the frequency of such deviations from occurring. Identified preventative safeguards shown in Appendix C, and Table 5.1-10 include the following:

- Facility and equipment design, application of appropriate design classification and applicable design codes and standards,
- Programs relating to configuration and document control, quality assurance, and preventative maintenance and inspection,
- Administrative controls including the WIPP RH WAC,[10] waste handling procedures and training, and the WIPP Emergency Management Program[38] and associated procedures.

Section 5.2.3 evaluates the accident dose consequences to immediate workers from operational waste handling accidents whose frequency is greater than 1E-06/yr, and may be initiated by waste handling equipment failure or directly through human error by a worker performing a waste handling operation. These accidents include crane failure, and waste canister drops in the WHB and the Underground. The immediate worker is that individual directly involved with the waste handling operation for which the accident is postulated. This evaluation will ensure that the maximum allowable radionuclide inventory, in conjunction with the other layers of defense-in-depth, will preclude worker exposure from being unacceptable. Releases from such accidents are conservatively assumed to be instantaneous and, although procedures dictate that workers exit the area immediately, such accidents present an immediate risk due to the inhalation of airborne radionuclides to the worker performing the waste handling operation.

To evaluate the risk to immediate workers from extremely unlikely operational accident, such as waste hoist failure, the direction of resources in this SAR is more focused on the evaluation of system/facility reliability (accident prevention) than on an in-depth evaluation of radiological consequences to an immediate worker and post accident mitigative systems and controls. This evaluation is conducted in the event tree/fault tree analysis in Appendix D, and the accident scenario and evaluation of design adequacy descriptions for each applicable accident in Section 5.2.3. In addition to these fault tree analyses, human error as an initiating event is evaluated in the WIPP Human Factors Evaluation.[39]

As derived from the RH HAZOPs, the risk to immediate workers from severe natural phenomenon (DBE and/or DBT), is dominated by worker fatality due to the energetic phenomenon during the event, as opposed to a specified radiological dose for which additional mitigative SSCs or administrative controls may be derived. This SAR is focused more on the evaluation of the existing facility design when subjected to the severe natural phenomenon (to reduce the likelihood of worker fatality, as well as breach of waste containers), rather than on the evaluation of radiological consequences to an immediate worker. This evaluation is conducted in the accident scenario and evaluation of design adequacy descriptions for each applicable accident in Section 5.2.3.

The RH waste operations hazardous events that only exceed the immediate worker criteria are shown in Table 5.1-11. Other hazardous events that exceed offsite criteria are analyzed in the accident analysis as previously described. It is estimated that either there are no consequences or the mitigated consequences are below the anticipated guideline of 5 rem (50 mSv) per year after crediting (qualitatively) the preventive and/or mitigative features.

5.1.8 Defense-in-Depth Structures, Systems, and Components (SSCs)

Specific preventative and mitigative SSCs are listed in Appendix C for each postulated deviation as identified in the HAZOP,[4,5] and in Table 5.1-10 for each deviation considered for quantitative accident analysis. Specific SSCs that fulfill a defense-in-depth function, or are considered essential for waste handling, storage and/or disposal operations are as follows: (1) WHB Heating, Ventilation and Air Conditioning (HVAC) (excluding CH area ventilation), and Underground Ventilation and Filtration System (UVFS) (including underground shift to filtration); (2) Waste Hoist Equipment (including Brake System designated Safety Significant from the CH SAR); (3) Waste Handling Equipment (including the grapple hoist, RH cranes, etc., as required), (4) WHB structure including tornado doors, (5) Central Monitoring System (to support underground shift to filtration only); and (6) Radiation Monitoring System, active waste disposal room exit alpha CAM (for underground shift to filtration).

Section 5.2.4.1, Evaluation of the Design Basis, discusses in detail: (1) the evaluation of safety SSCs, and (2) the applicability of functional and performance requirements (system evaluation) and controls (TSRs). Detailed design descriptions for the above SSCs may be found in the applicable system design descriptions (SDDs) as referenced in Chapter 4.

References for Section 5.1

1. 10 CFR 830.204, Documented Safety Analysis.

2. DOE-STD-1027-92, Hazard Categorization and Accident Analysis Techniques for Compliance with DOE Order 5480.23, Nuclear Safety Analysis Reports, 1992.

3. DOE-STD-3009-94, Preparation Guide for U.S. Department of Energy Nonreactor Nuclear Facility Safety Analysis Reports, July 1994.

4. WP 02-RP.02, Hazard Analysis Results Report for Remote Handled Waste (RH), Waste Isolation Pilot Plant, July 1999.

5. WSMS-WIPP-00-0006, Hazard and Operability Study for the 10-160B Cask Remote Transuranic Waste Handling System (RH), Waste Isolation Pilot Plant, Westinghouse Safety Management Solutions, January 2001.

6. DOE/EIS-0026, Final Environmental Impact Statement, Waste Isolation Pilot Plant, 2 Vols, U.S. Department of Energy, Carlsbad, N.M., 1980.

7. DOE/EIS-0026-FS, Final Supplement Environmental Impact Statement, Waste Isolation Pilot Plant, U.S. Department of Energy, Carlsbad, N.M., 1990.

8. DOE/WIPP 91-031, WIPP Fire Hazards and Risk Analysis, May 1991.

9. DOE/WIPP-3217, WIPP Fire Hazards Analysis Report, June 2002.

10. DOE/WIPP-Draft 3123, RH TRU Waste Acceptance Criteria for the Waste Isolation Pilot Plant.

11. 10 CFR 835, Occupational Radiation Protection

12. WP 12-IS.01, Industrial Safety Program

13. Safety Evaluation Report Model CNS 10-160B Package Certificate of Compliance No. 9204, Revision No. 5, U.S. Nuclear Regulatory Commission, May 2000.

14. Public Law 102-579, WIPP Land Withdrawal Act, October 1992.

15. Working Agreement for Consultation and Cooperation Between Department of Energy and the State of New Mexico on the Waste Isolation Pilot Plant, April 1988.

16. Public Law 102-386, Federal Facility Compliance Act, U.S. Congress, 1992.

17. DOE/CAO-95-1121, U.S. Department of Energy Waste Isolation Pilot Plant Transuranic Waste Baseline Inventory Report (BIR), Revision 3, June 1996.

18. 10 CFR 830.203, Unreviewed Safety Questions.

19. 40 CFR 261, Identification and Listing of Hazardous Waste.

20. Hazardous Waste Facility Permit No. NM4890139088-TSDF, issued by the New Mexico Environment Department October 27, 1999.

21. ENV-003, Hazardous Stored TRU Waste Source Terms for the RWMC's TSA, 1990.

22. DOE O 420.1, Facility Safety, October 1995.

23. Guidelines for Hazard Evaluation Procedures, Second Edition, Center for Chemical Processing Safety of the American Institute of Chemical Engineers, 1992.

24. DOE/WIPP-95-2065, Rev.4, Waste Isolation Pilot Plant Safety Analysis Report, January 2000.

25. Statistical Summary of Radiological Base for WIPP, DOE/WIPP 42-037, 1992.

26. System Design Description, SDD CFOO-GC00.

27. System Design Description, SDD WH03.11-1.

28. System Design Description, SDD General Plant Description

29. Waste Isolation Pilot Plant Nuclear Criticality Safety Evaluation for Remote Handled Waste (U), WSMS-WIPP-00-0003, Rev. 1, December 2001.

30. 10 CFR 71.71-73, Packaging and Transportation of Radioactive Material

31. PLG-1167, Analysis of Roof Falls and Methane Gas Explosions in Closed Rooms and Panel

32. ANSI/ANS-8.1, Nuclear Criticality Safety in Operations with Fissionable Materials Outside Reactors.

33. ANSI/ANS-8.3, Criticality Accident Alarm System.

34. ANSI/ANS-8.5, Use of Borosilicate-Glass Raschig Rings as a Neutron Absorber in Solutions of Fissile Material.

35. ANSI/ANS-8.7, Guide for Nuclear Criticality Safety in the Storage of Fissile Materials.

36. ANSI/ANS-8.15, Nuclear Criticality Control of Special Actinide Elements.

37. ANSI/ANS-8.19, Administrative Practices for Nuclear Criticality Safety.

38. WP 12-9, WIPP Emergency Management Program.

39. WP 02-RP.03, WIPP Human Factors Evaluation, May 2002.

40. 10 CFR 830.205, Technical Safety Requirements.

41. 29 CFR 1910.119, Process Safety Management of Highly Hazardous Chemicals.

Table 5.1-1 Maximum Hazardous Material Inventory by Facility Location

Hazard Type	Material Form	Location (Facility Process)	Inventory Number of Canisters	Basis for Number of Canisters
WASTE HANDLING BUILDING (72-B Cask)				
Radioactive/Non-radioactive Material	RH TRU Waste	RH Bay	2	2 72B casks processed at a time[1]
		Transfer Cell	1	1 road cask processed at a time
		Facility Cask Loading Room	1	1 facility cask processed at a time
UNDERGROUND HORIZON (72-B Cask)				
Radioactive/Non-radioactive Material	RH TRU Waste	Waste Shaft Station	1	1 Facility cask processed at a time
		Disposal panel	730	Total waste capacity/panel
WASTE HANDLING BUILDING (10-160B Cask)				
Radioactive/Non-radioactive Material	RH TRU Waste	RH Bay	20 drums	2 10-160B casks processed at a time[1]
		Hot Cell	6 loaded canisters + 10 drums = 28 drums	
		Transfer Cell	1	1 facility canister processed at a time
		Facility Cask Loading Room	1	1 facility cask processed at a time
UNDERGROUND HORIZON (10-160B Cask)				
Radioactive/ Non-radioactive Material	RH TRU Waste	Waste Shaft Station	1	1 Facility cask processed at a time
		Disposal panel	730	Total waste capacity/panel

Notes:
1. Any combination of two 10-160B and 72-B casks can be processed in the RH Bay of the WHB.

Table 5.1-2 VOC Concentrations

Chemical	Weighted[1] Average (ppmv/mole gas)	Mole Fraction (1.0E-06 mole VOC/ppmv)	Moles gas/canister or drum (moles gas)[3]	Molecular Weight (g/mole)	Unit Conversion 2.2E-03 lb/g (1.0E+03mg/g)	Canister or Drum Inventory[2] lb (mg)
72-B Canister						
Methylene Chloride	368.5	1.0E-06	28.38	84.9	2.2E-03 (1.0E+03)	2.0E-03 (887.9)
Chloroform	25.3	1.0E-06	28.38	119.4	2.2E-03 (1.0E+03)	1.9E-04 (85.7)
1,1,2,2-Tetrachloroethane	9.4	1.0E-06	28.38	167.9	2.2E-03 (1.0E+03)	9.9E-05 (44.8)
Carbon Tetrachloride	375.5	1.0E-06	28.38	153.8	2.2E-03 (1.0E+03)	3.6E-03 (1639.0)
10-160B Cask						
Methylene Chloride	368.5	1.0E-06	6.5	84.9	2.2E-03 (1.0E+03)	4.5E-04 (2.0E+02)
Chloroform	25.3	1.0E-06	6.5	119.4	2.2E-03 (1.0E+03)	4.3E-05 (2.0E+01)
1,1,2,2-Tetrachloroethane	9.4	1.0E-06	6.5	167.9	2.2E-03 (1.0E+03)	2.3E-05 (1.0E+01)
Carbon Tetrachloride	375.5	1.0E-06	6.5	153.8	2.2E-03 (1.0E+03)	8.3E-04 (3.8E+02)

Notes:

1. Data from Hazardous Waste Facility Permit [15].
2. Canister Inventory = weighted average (ppmv VOC/mole gas) x mole fraction (1E-06 mole VOC/ppmv VOC) x moles gas/canister (28.38 moles gas at STP/canister) x molecular weight (g/mole VOC) x (2.2E-03 lb/g)
   Assumption: 70% void space in TRU waste canisters
   240 gallons waste canister at STP: air =0.01076 lbs/gallon; molecular weight air = 0.06372 lbs/mole
   55 gallon waste drum at STP: density of air = 0.01076 lbs/gallon
   Air moles/gal = (0.01076 lbs/gallon)/(0.06372 lbs/mole) = 0.1689 mole/gallon
   Moles gas /canister = (0.70)(240 gallons/canister)(0.1689 mole/gallon) = 28.38 moles/canister
   Moles gas /drum = (0.70)(55 gallons/drum)x (0.01076 lbs/gallon/0.06372 lbs/mole) = 6.5 moles/drum
3. Drum inventory = weighted average (ppmv VOC/mole gas) x mole fraction (1.0E-06 mole VOC/ppmv VOC) x moles gas/drum (6.5 moles of gas at STP/drum) x molecular weight (g/mole) x unit conversion factor

Table 5.1-3 Hazardous Material Concentrations Used in Analysis

Chemical	Average[1] Weight Fraction	Inventory - lbs (mg)[2] (Based on 6300 lbs/ 72-B canister)	Inventory - lbs (mg)[3] (Based on 243 lbs/drum)	Total 10-160BCask Inventory - mg	Inventory in One Drum - mg (Based on 10 drums per cask)
Asbestos	2.7E-03	17.00 (7.7E+06)	6.6E-01 (3.0E+05)	3.0E+06	3.0E+05
Beryllium	2.1E-04	1.32 (6.0E+05)	5.1E-02 (2.3E+04)	2.3E+05	2.3E+04
Cadmium	3.0E-06	1.9E-02 (8.6E+03)	1.0E-03 (3.3E+02)	3.3E+03	3.3E+02
Lead	8.3E-03	52.3 (2.4E+07)	2.0E+00 (9.2E+05)	9.2E+06	9.2E+05
Butyl Alcohol	3.0E-03	18.9 (8.6E+06)	7.3E-01 (3.3E+05)	3.3E+06	3.3E+05
Carbon Tetrachloride	6.3E-03	39.7 (1.8E+07)	1.5E+00 (6.9E+05)	6.9E+06	6.9E+05
Mercury	3.5E-03	22.05 (1.0E+07)	8.5E-01 (3.9E+05)	3.7E+06	3.7E+05
Methyl Alcohol	8.0E-06	5.0E-02 (2.3E+04)	2.0E-03 (8.8E+02)	8.8E+03	8.8E+02
Methylene Chloride	4.0E-04	2.5 (1.1E+06)	9.7E-02 (4.4E+04)	4.4+05	4.4E+04
Polychlorinated Biphenyl (PCB)	8.5E-03	53.55 (2.4E+07)	2.1E+00 (9.4E+05)	9.4E+06	9.4E+05
Trichlorethylene	3.9E-03	24.6 (1.1E+07)	9.5E-01 (4.3E+05)	4.3E+06	4.3E+05

Notes:

1. Data from Reference 16, Table 1. Data listed is average weight fraction of each hazardous material of the total canister/drum weight. Sum will not add to unity, as other nonhazardous materials are within each canister and or drum.
2. Canister Inventory = (Weight Fraction) x (6300 lbs/canister) [x (453.592 g/lb) x (1E+03 mg/g)]
3. Cask Inventory = (Weight Fraction) x (2430 lbs/cask) [x (453.592 g/lb) x (1000 mg/g)]

Table 5.1-4 Initiating Frequency Evaluation Levels

Rank	Frequency Code	Description	Estimated Frequency of Occurrence (yr^{-1})
4	Anticipated (A)	Accidents that may occur several times during the lifetime of the facility (accidents that commonly occur).	$10^{-1} \geq$ frequency$>10^{-2}$
3	Unlikely (U)	Accidents that are not anticipated to occur during the lifetime of the facility (e.g., Uniform Building Code-level earthquake, 100-year flood, maximum wind gust).	$10^{-4} < f \leq 10^{-2}$
2	Extremely Unlikely (EU)	Accidents that will probably not occur during the life cycle of the facility. This includes the design basis accidents.	$10^{-6} < f \leq 10^{-4}$
1	Beyond Extremely Unlikely (BEU)	All other accidents.	$f \leq 10^{-6}$

Table 5.1-5 Qualitative Total Consequence Classification and Rank

Consequence Rank	Descriptive Word	Description
4	High	May cause death to facility workers from an industrial accident. Considerable offsite impact to people and environs. Offsite contamination requiring cleanup; or facility destruction.
3	Moderate	May cause severe facility worker injury with disability from an industrial accident. Minor offsite impact to people or environs. May result in facility contamination, or facility damage with considerable disruption of facility operations; or considerable onsite impact to people or the environs.
2	Low	May cause minor facility worker injury as the result of an industrial accident or acute exposure from radiological material with lost time and with no disability. Negligible offsite impact to people or environs. May result in facility contamination, or facility damage with minor disruption of facility operation.
1	Negligible	Negligible onsite and offsite impact on operations, people or environs. May cause minimal impact to facility worker injury as the result of an industrial accident or acute exposure to radiological material with no lost time. May result in minimal facility contamination with negligible disruption of facility operations.

Table 5.1-6 Qualitative Radiological Consequence Classification and Rank

Consequence Rank	Descriptive Word	Description
4	High	Considerable offsite impact to people and environs. Offsite contamination requiring cleanup; or facility destruction.
3	Moderate	Minor offsite impact to people or environs. May result in facility contamination, or facility damage with considerable disruption of facility operations; or considerable onsite impact to people or the environs.
2	Low	May cause minor facility worker injury as the result of an acute exposure from radiological material with lost time and with no disability. Negligible offsite impact to people or environs. May result in facility contamination, or facility damage with minor disruption of facility operation.
1	Negligible	Negligible onsite and offsite impact on operations, people or environs. May cause minimal impact to facility worker as the result of acute exposure to radiological material with no lost time. May result in minimal facility contamination with negligible disruption of facility operations.

Table 5.1-7 Risk Binning Matrix

FREQUENCY \ CONSEQUENCES	Negligible (1)	Low (2)	Moderate (3)	High (4)
Anticipated (4) $10^{-1} \geq f > 10^{-2}$				
Unlikely (3) $10^{-4} < f \leq 10^{-2}$				
Extremely Unlikely (2) $10^{-6} < f \leq 10^{-4}$				
Beyond Extremely Unlikely (1) $f \leq 10^{-6}$				

Situations of high risk and major concern; may be considered as "unique" events; candidates for individual examination

Situations of moderate risk and concern; representative events; examine bounding events

Situations of little risk and concern; no accident analysis needed

Table 5.1-8 Summary of Hazardous Events Selected for Quantitative Analysis **Page 1 of 2**

72-B Cask			
Major Concern		**Moderate Concern**	
Study Node/Event	**Deviation**	**Study Node/Event**	**Deviation**
7-1	Shuttle moves while crane is lifting canister	10-5	Shield valve on emplacement equipment is closed on canister
7-2	Canister dropped while being lifted into facility cask	10-6	Mis-alignment of canister as it is moved into borehole
7-6	Shield valves (2) close on canister	13-1	Seismic Event (Design Basis Earthquake)
7-10	Hydraulic fluid fire	13-2	Tornado (Design Basis Tornado)
8-4	Conveyance positioned at station, facility cask dropped into shaft		
8-6	Loss of brakes on conveyance while loaded with facility cask - conveyance drops to bottom of waste shaft		
9-5	Forklift drops facility cask		
9-7	Diesel fire on forklift		
9-8	Diesel fire followed by an explosion		
10-1	Loss of control - Forklift drops facility cask onto emplacement equipment		
10-2	Hydraulic fluid/diesel fuel fire		
10-3	Hydraulic/diesel fuel fire followed by an explosion		

Table 5.1-8 Summary of Hazardous Events Selected for Quantitative Analysis

10-160B Cask			
Major Concern		**Moderate Concern**	
Study Node/Event	**Deviation**	**Study Node/Event**	**Deviation**
1B-6	While moving compressed gas cylinders in RH Bay, cylinder falls - ruptures and impacts cask.	10BF-1	While lifting the drum, drop drum in the Hot Cell.
4D-1	Cask falls off of RCTC in RH Bay while lid is loose.	11D-1	Fire in the Hot Cell.
4F-1	Shield plug dropped onto stored facility canister in Hot Cell.	11D-2	Explosion in the Hot Cell.
4G-1	Cask lid dropped onto the cask and drums in CUR.	11D-3*	Halogenated hydrocarbons accumulate in facility canister head space and welding activity produces phosgene gas (toxic) in the Hot Cell
4H-1	Cask lid dropped onto the stored waste in the Hot Cell.	11F-1	Loaded facility canister dropped in the Hot Cell.
5BD-1	Lifting fixture dropped onto the drums in the CUR.	12E-1	Drop the loaded facility canister into the Transfer Cell.
5CE-1	Drum carriage dropped while lifting due to carriage getting caught and over stressing fixture or basket in the CUR.	12E-2	Hot Cell Shield valve inadvertently closes on facility canister and shears the canister.
5CE-2	Drum carriage dropped inside the Hot Cell onto stored waste.	12E-3	Inadvertent movement of crane while lowering facility canister into Transfer Cell.
9-1	Fire in Hot Cell while containing stored waste.	12E-4	Inadvertent movement of the shuttle car with the facility canister partially lowered.
9-2	Fire/explosion in Hot Cell while containing stored waste.	14B-1	Robotic arm damages facility canister during contamination survey.
9-5	Shield plug lift fixture falls over in the Hot Cell.	20-1	Loss of confinement (LOC) in RH Bay due to seismic event (lid is loose on cask).
9AC-1	Empty facility canister dropped onto stored waste.	20-2	Full facility fire.
10A-1	Puncture drum in the Hot Cell with PAR manipulator.	20-3	LOC due to Tornado
10B-1	While lifting the drum, drum lid comes off in the Hot Cell.		

*Chemical/toxic exposure only

Table 5.1-9 Specific Accidents Selected for Quantitative Analysis

72-B Cask		
Grouped Event Description		**Individual Events Included (Study Node and Event**
1) Fire Underground	(RH1)	9-7, 10-2
2) Fire in the WHB	(RH2)	7-10
3) Loss of confinement (LOC) in the WHB	(RH3)	7-1, 7-2, 7-6
4) LOC Underground (waste hoist failure)	(RH4-A)	8-4, 8-6
5)LOC Underground (waste movement)	(RH4-B)	9-5, 10-1,10-5, 10-6
6) Fire followed by Explosion Underground	(RH5)	9-8, 10-3
7) Seismic Event	(RH6)	13-1
8) Tornado Event	(RH7)	13-2
9) Aircraft Crash	(RH8)	

10-160B Cask		
Grouped Event Description		**Individual Events Included (Study Node and Event**
1) Fire in Hot Cell	(NC1	9-1, 11D-1
2) Fire Underground	(NC2)	Same as RH1 (9-7, 10-2)
3) LOC in WHB	(NC3)	1B-6, 4D-1, 4F-1, 4G-1, 4H-1, 5BD-1, 5CE-1, 5CE-2, 9-5, 9AC-1, 10A-1, 10B-1, 10BF-1, 11D-3, 11F-1, 12E-1, 12E-2, 12E-3, 12E-4, 14B-1
4) LOC Transfer Cell & Underground	(NC4)	13ABCD-1 & 14ACDEFGHI-1 same as RH3; 15ABC-1 same as RH4-A; 16ABCD-1 & 17ABCD-1 same as RH4-B
5) Explosion followed by Fire in Hot Cell	(NC5)	9-2, 11D-2
6) Fire Followed by an Explosion Underground	(NC6)	Same as RH5 (9-8, 10-3)
7) Seismic Event	(NC7)	20-1, 20-2
8) Tornado Event	(NC8)	20-3

Table 5.1-10 HAZOP Accident Scenario Ranking **Page 1 of 13**

Accident	Scenario	# Node	Deviation	Consequence	Qualitative Consequence Ranking (Table 5.1-6)	Qualitative Frequency Ranking (Table 5.1-4)	Prevention/Mitigation
72-B Cask							
RH1	Fire in the Underground	9-7 Facility cask transfer to disposal room	Diesel fire on forklift	Potential for significant radioactive materials release	4	**4**	Prevention: Administrative Controls on fuel transfer and hot work permit. Mitigation: Vented canister, Fire suppression system (on forklift), Underground ventilation system, Mine worker training, Mine evacuation plan.
RH1	Fire in the Underground	10-2 Canister placement in borehole	Hydraulic fluid/diesel fuel fire	Potential for significant radioactive materials release	4	4	Prevention: Administrative Controls on fuel transfer and hot worker permit. Mitigation: Vented canister, Fire suppression system (on forklift and HERE), Underground ventilation system, Mine worker training, Mine evacuation plan.
RH2	Fire in the WHB	7-10 Load canister into facility cask	Hydraulic fluid fire	Potential for significant radioactive materials release	4	4	Prevention: Administrative Controls on fuel transfer and hot worker permit. Mitigation: Limited quantity (app. 40 gallons), Thermal detection alarms, Sprinkler system, Sump, Evacuation plan, Emergency exit.
RH3	LOC in the WHB	7-1 Load canister into facility cask	Excessive movement - Shuttle moves while crane is lifting canister	Potential for significant radioactive materials release	4	4	Prevention: Program for Shuttle and control equipment, Pre-op checks, PM program, Grapple hoist interlock. Mitigation: Limited access into Transfer Cell, Building Exhaust HEPA filtered, Emergency response plan and teams.

Table 5.1-10 HAZOP Accident Scenario Ranking

Accident	Scenario	# Node	Deviation	Consequence	Qualitative Consequence Ranking (Table 5.1-6)	Qualitative Frequency Ranking (Table 5.1-4)	Prevention/Mitigation
RH3	LOC in the WHB	7-2 Load canister into facility cask	Canister is dropped while being lifted into f canister falls back into 72B cask or onto Transfer Room floor	Potential for significant radioactive materials release	4	4	Prevention: Weight interlock on grapple, Type A container, PM program, Program for crane equipment and control equipment, Pre-op checks. Mitigation: Shielding, impact limiter on Transfer Cell floor, Limited access into Transfer Cell, Operator training & qualification, Building Exhaust HEPA Filtered, Emergency Response Plan and Teams.
RH3	LOC in the WHB	7-6 Load canister into facility cask	Shield valves (2) close on canister (sooner than desired)	Potential for significant radioactive materials release	4	4	Prevention: Control loop interlocks, Torque limiters on close of shield valves, PM program, Pre-op checks. Mitigation: Shielding, HEPA filtration, Differential pressure maintained by HVAC, Operator training & qualification, Emergency response plan and teams.
RH4-A	LOC in the U/G (waste hoist failure)	8-4 facility cask loaded onto conveyance	Incorrect conveyance position - Conveyance positioned at station, facility cask dropped onto conveyance	Potential for significant radioactive materials release	4	4	Prevention: Pivot rail stops, Car stops, Redundant verification of equipment readiness, Pivot rails interlocked to hoist position (hardwired). Mitigation: Physical barriers - shaft gates, Limited speed of facility cask transfer car, Cask Unloading Room doors, Shift to HEPA filtration, Operator training & qualification, Emergency response plan and teams.

Table 5.1-10 HAZOP Accident Scenario Ranking **Page 3 of 13**

Accident	Scenario	# Node	Deviation	Consequence	Qualitative Consequence Ranking (Table 5.1-6)	Qualitative Frequency Ranking (Table 5.1-4)	Prevention/Mitigation
RH4-A	LOC in the U/G (waste hoist failure)	8-6 facility cask loaded on conveyance	Loss of brakes on conveyance while loaded with facility cask - conveyance drops to bottom of waste shaft	Potential for significant radioactive materials release	4	4	Prevention: Brake system design (designated Safety Significant), Hoist equipment inspection program, PM program on hoist including brake system, Pre-op checks. Mitigation: Shift to HEPA filtration, Emergency response plan and teams.
RH4-B	LOC in the U/G	9-5 facility cask transfer to disposal room	Forklift drops facility cask	Potential for significant radioactive materials release	4	4	Prevention: Forklift inspection program, PM program facility cask design. Mitigation: Waste transit notification program, Shift to HEPA filtration, Operator training & qualification, Emergency response plan and teams.
RH4-B	LOC in the U/G	10-1 Canister emplacement in borehole	Loss of control - forklift drops facility cask onto emplacement equipment	Potential for significant radioactive materials release	4	4	Prevention: facility cask design, equipment design, PM program, design of the drift, Traffic control program. Mitigation: Shift to HEPA filtration, Operator training & qualification, Emergency response plan and teams.

Table 5.1-10 HAZOP Accident Scenario Ranking **Page 4 of 13**

Accident	Scenario	# Node	Deviation	Consequence	Qualitative Consequence Ranking (Table 5.1-6)	Qualitative Frequency Ranking (Table 5.1-4)	Prevention/Mitigation
RH4-B	LOC in the U/G	10-5 Canister emplacement in borehole	Shield valve on emplacement equipment is closed on canister during emplacement process.	Potential for significant radioactive materials release	4	4	Prevention: Shield valve control interlocks, Torque limiter on shield valve motor, Control valve indicator signals shield valve problem, PM program, Pre-op checks. Mitigation: Radioactive material confined by emplacement equipment, Shift to HEPA filtration, Operator training & qualification, Emergency response plan and teams.
RH4-B	LOC in the U/G	10-6 Canister emplacement in borehole	Mis-alignment of canister as it is moved into borehole	Potential for radioactive materials release	3	4	Prevention: Stall pressure limit on ram, PM program, HERE is braced to opposing rib. Mitigation: Shift to HEPA filtration, Operator training & qualification, Emergency response plan and teams.
RH5	Fire followed by explosion U/G	9-8 facility cask transfer to disposal room	Diesel fire	Potential for significant radioactive materials release	4	4	Prevention: Administrative Controls on fuel transfer and hot work permit. Mitigation: Vented canister, Fire suppression system (on forklift), Underground ventilation system, Rescue program, Mine worker training, Mine evacuation plan.
RH5	Fire followed by explosion U/G	10-3 Canister emplacement in borehole	Hydraulic fluid/diesel fuel fire	Potential for significant radioactive materials release	4	4	Prevention: Administrative Controls on fuel transfer and hot work permit. Mitigation: Vented canister, Fire suppression system (on forklift and HERE), Underground ventilation system, Rescue program, Mine worker training, Mine evacuation plan.

Table 5.1-10 HAZOP Accident Scenario Ranking **Page 5 of 13**

Accident	Scenario	# Node	Deviation	Consequence	Qualitative Consequence Ranking (Table 5.1-6)	Qualitative Frequency Ranking (Table 5.1-4)	Prevention/Mitigation
RH6	Seismic	13-1 General Facility operation - NPH, External events	Seismic event (Design Basis Earthquake)	Potential for significant radioactive materials release	4	3	Prevention: WHB and equipment designed for DBE, 72B Cask design - meets DOT Type B shipping container certification requirements. Mitigation: HVAC system shutdown switch, Emergency response plan and teams; Recovery plan.
RH7	Tornado	13-2 General Facility operation - NPH, External events	Tornado event (Design Basis Tornado)	Potential for significant radioactive materials release	4	2	Prevention: WHB and equipment designed for DBT, 72B Cask design meets DOT Type B shipping container certification requirements. Mitigation: Weather monitored by CMR, Emergency response plan and teams; Recovery plan.

Table 5.1-10 HAZOP Accident Scenario Ranking

Accident	Scenario	# Node	Deviation	Consequence	Qualitative Consequence Ranking (Table 5.1-6)	Qualitative Frequency Ranking (Table 5.1-4)	Prevention/Mitigation
10-160-B Cask							
NC1	Fire in the Hot Cell	9-1 Move empty facility canister into Hot Cell and prepare facility canister	Fire in the Hot cell while containing stored waste	Potential for significant radioactive materials release	4	**4**	Prevention: PM Program on electrical equipment; Remote location of electrical circuits protective devices; Hot Cell design; Limited ignition sources. Mitigation: Fire loading/Combustible Control Program; Procedures and Training.
NC1	Fire in the Hot Cell	11D-1 Prepare facility canister for disposal	Fire in the Hot Cell	Potential for significant radioactive materials release	4	4	Prevention: Storage limits on waste (i.e., LFL); Lid design; Canister design. Mitigation: Fire loading/Combustible Control Program; Procedures and Training; Thermal detector; Shield door closed in the CUR; Shield plug in Hot Cell is in place.
NC3-A	LOC in the WHB	4F-1 Remove cask lid from cask in CUR	Shield plug dropped onto stored facility canister in Hot Cell	Potential for significant radioactive materials release	4	4	Prevention: PM Program on crane; Crane design; Facility design. Mitigation: Procedures and Training; Ventilation system; CAMs; Emergency response procedure; Shield door crane interlock.
NC3-A	LOC in the WHB	4H-1 Remove cask lid from cask in CUR	Cask lid dropped onto stored waste in Hot Cell	Potential for significant radioactive materials release	4	4	Prevention: PM Program on crane; Crane design; Facility design. Mitigation: Procedures and Training; Ventilation system; CAMs; Emergency response procedure; Shield door crane interlock.

Table 5.1-10 HAZOP Accident Scenario Ranking

Accident	Scenario	# Node	Deviation	Consequence	Qualitative Consequence Ranking (Table 5.1-6)	Qualitative Frequency Ranking (Table 5.1-4)	Prevention/Mitigation
NC3-A	LOC in the WHB	5CE-2 Unload the cask in the CUR	Drum carriage dropped inside the Hot Cell onto stored waste	Potential for significant radioactive materials release	4	4	Prevention: PM Program on crane; Crane design; Fixture design; Drum carriage design. Mitigation: Procedures and Training; Ventilation system; Emergency response procedure.
NC3-A	LOC in the WHB	9-5 Move empty facility canister into Hot Cell and Prepare facility canister	Shield plug lift fixture falls over in the Hot Cell	Potential for significant radioactive materials release	4	4	Prevention: Hot Cell leaded glass (outer layer). Mitigation: Procedures and Training; Ventilation system.
NC3-A	LOC in the WHB	9AC-1 Move empty facility canister into Hot Cell and Prepare facility canister	Empty facility canister dropped onto stored waste in Hot Cell	Potential for significant radioactive materials release	4	4	Prevention: PM Program on crane; Crane/grapple design; Facility design. Mitigation: Procedures and Training; Ventilation system; CAMs; Emergency response procedure; Weight of Empty canister; Shield door crane interlock; Shield plug in Hot Cell is in place.
NC3-B	LOC in the WHB	4G-1 Remove cask lid from cask in CUR	Cask lid dropped onto the cask and drums in CUR	Potential for significant radioactive materials release	4	4	Prevention: PM Program on crane; Crane design; Facility design. Mitigation: Procedures and Training; Ventilation system; CAMs; Emergency response procedure; Shield door crane interlock.

Table 5.1-10 HAZOP Accident Scenario Ranking **Page 8 of 13**

Accident	Scenario	# Node	Deviation	Consequence	Qualitative Consequence Ranking (Table 5.1-6)	Qualitative Frequency Ranking (Table 5.1-4)	Prevention/Mitigation
NC3-B	LOC in the WHB	5BD-1 Unload the cask in the CUR	Lifting fixture dropped onto the drums in CUR	Potential for significant radioactive materials release	4	4	Prevention: PM Program on crane; Crane design; Fixture design; Facility design. Mitigation: Procedures and Training; Ventilation system; CAMs; Emergency response procedure; Shield door crane interlock.
NC3-C	LOC in the WHB	10B-1 Unload carriage units in Hot Cell	While lifting a drum, drum lid comes off in the Hot Cell	Potential for significant radioactive materials release	4	4	Prevention: Drum design; Drum inspection. Mitigation: Procedures and Training; Ventilation system; WAC; Shield plug in Hot Cell is in place; Shield door crane interlock.
NC3-C	LOC in the WHB	10BF-1 Unload carriage units in Hot Cell	While lifting a drum, drop drum in the Hot Cell.	Potential for significant radioactive materials release	4	4	Prevention: PM Program on crane; Crane design; Facility design. Mitigation: Procedures and Training; Ventilation system; CAMs; Shield plug in Hot Cell is in place; Shield door crane interlock; Emergency response procedure.
NC3-C	LOC in the WHB	11F-1 Prepare facility canister for disposal	Loaded facility canister dropped in the Hot Cell	Potential for radioactive materials release	4	4	Prevention: PM Program on crane; Grapple design; Facility design. Mitigation: Procedures and Training; Ventilation system; CAMs; Canister design; Drum design; Shield plug in Hot Cell is in place; Shield door crane interlock; Emergency response procedure.

Table 5.1-10 HAZOP Accident Scenario Ranking

Accident	Scenario	# Node	Deviation	Consequence	Qualitative Consequence Ranking (Table 5.1-6)	Qualitative Frequency Ranking (Table 5.1-4)	Prevention/Mitigation
NC3-D	LOC Confinement in the WHB	5CE-1 Unload the cask in the CUR	Drum carriage dropped while lifting due to carriage getting caught and over stressing fixture or basket in the CUR	Potential for significant radioactive materials release	4	4	Prevention: PM Program on crane; Fixture design; Drum carriage design; Crane design. Mitigation: Procedures and Training; Ventilation system; Shield door crane interlock; Emergency response procedure.
NC3-D	LOC in the WHB	12E-1 facility canister transfer to shuttle car in Transfer Cell	Drop the loaded facility canister into the Transfer Cell	Potential for significant radioactive materials release	4	4	Prevention: PM Program on crane; Guide tubes; Shuttle car design; Impact limiter on floor. Mitigation: Procedures and Training; Ventilation system; Emergency response procedure.
NC3-E	LOC in the WHB	10A-1 Unload carriage units in Hot Cell	Puncture drum in the Hot Cell with PAR manipulator	Potential for significant radioactive materials release	4	4	Prevention: PM Program on PAR manipulator; Crane design; Facility design. Mitigation: Procedures and Training; Ventilation system; CAMs; Emergency response procedure; Shield plug in Hot Cell is in place; Shield door crane interlock.

Table 5.1-10 HAZOP Accident Scenario Ranking

Accident	Scenario	# Node	Deviation	Consequence	Qualitative Consequence Ranking (Table 5.1-6)	Qualitative Frequency Ranking (Table 5.1-4)	Prevention/Mitigation
NC3-F	LOC in the WHB	12E-2 facility canister transfer to shuttle car in Transfer Cell	Hot Cell shield valve inadvertently closes on facility canister and shears the canister	Potential for significant radioactive materials release	4	4	Prevention: PM Program on shield valve; Crane and Hot Cell shield valve interlock; Torque limiter on shield valve; Canister design. Mitigation: Procedures and Training; Ventilation system; Emergency response procedure.
NC3-F	LOC in the WHB	12E-3 facility canister transfer to shuttle car in Transfer Cell	Inadvertent movement of crane while lowering facility canister partially lowered	Potential for significant radioactive materials release	4	4	Prevention: PM Program on crane; Crane and Hot Cell shield valve interlock; Torque limiter on shield valve; Canister design. Mitigation: Procedures and Training; Ventilation system; Emergency response procedure.
NC3-F	LOC in the WHB	12E-4 facility canister transfer to shuttle car in Transfer Cell	Inadvertent movement of shuttle car with facility canister into Transfer Cell	Potential for significant radioactive materials release	4	4	Prevention: PM Program on shield valve/shuttle car interlock; Variable speed drive motor controller; Interlock between shuttle car and shield valve; Drive train on shuttle car - belts will slip; Canister design. Mitigation: Procedures and Training; Ventilation system; Emergency response procedure.

Table 5.1-10 HAZOP Accident Scenario Ranking

Accident	Scenario	# Node	Deviation	Consequence	Qualitative Consequence Ranking (Table 5.1-6)	Qualitative Frequency Ranking (Table 5.1-4)	Prevention/Mitigation
NC3-F	LOC in the WHB	14B-1 Load facility canister into facility cask from the Transfer Cell	Robotic arm damages facility canister during contamination survey	Potential for significant radioactive materials release	4	4	Prevention: Robot design; Collision detector; Force limiter on swipe arm. Mitigation: Procedures and Training; Ventilation system; Emergency response procedure.
NC3-G	LOC in the WHB	1B-6 Cask receipt and transfer in RH Bay	While moving compressed gas cylinder in RH Bay, cylinder falls, ruptures, and impacts cask	Potential for significant radioactive materials release	4	4	Prevention: Special cart; Cylinder design; Limited number and movement of cylinders. Mitigation: Procedures and Training; Ventilation system; Emergency response procedure.
NC3-H	LOC in the WHB	4D-1 Remove cask lid from cask in CUR	Cask falls off of RCTC in RH Bay while lid is loose	Potential for significant radioactive materials release	4	4	Prevention: Transfer car design; Limited speed of transfer car . Mitigation: Procedures and Training; Cask; DOT Type A drums; ARMs and CAMs; Ventilation system; Emergency response procedure; Nuclear coating on floor.
NC4	LOC in the Transfer Cell or Underground	13ABCD-1 Move facility canister into position in the Transfer Cell	Same as RH3				

Table 5.1-10 HAZOP Accident Scenario Ranking

Accident	Scenario	# Node	Deviation	Consequence	Qualitative Consequence Ranking (Table 5.1-6)	Qualitative Frequency Ranking (Table 5.1-4)	Prevention/Mitigation
NC4	LOC in the Transfer Cell or Underground	14ACDEFG HI-1 Load facility canister into facility cask from Transfer Cell	Same as RH4A				
NC4	LOC in the Transfer Cell or Underground	15ABC-1 facility cask onto hoist	Same as RH4A				
NC-4	LOC in the Transfer Cell or Underground	16ABCD-1 facility cask transfer to disposal room	Same as events RH4B				
NC-4	LOC in the Transfer Cell or Underground	17ABCD-1 Cask emplaceme nt in bore hole	Same as RH5				
NC5	Explosion followed by fire in the Hot Cell	9-2 Move empty facility canister into Hot Cell and Prepare facility canister	Fire/explosion in Hot Cell while containing stored waste	Potential for significant radioactive materials release	4	4	Prevention: WAC - no flammable items in the drum, limits on gas generation; Limited storage. Mitigation: Procedures and Training; Ventilation system; Emergency response procedure; Shield plug in Hot Cell is in place; Shield door closed.

Table 5.1-10 HAZOP Accident Scenario Ranking

Accident	Scenario	# Node	Deviation	Consequence	Qualitative Consequence Ranking (Table 5.1-6)	Qualitative Frequency Ranking (Table 5.1-4)	Prevention/Mitigation
NC-5	Explosion followed by fire in the Hot Cell	11D-2 Prepare facility canister for disposal	Explosion in the Hot Cell	Potential for significant radioactive materials release	4	4	Prevention: Welder removed; WAC - no flammable items in the drum, limits on gas generation; Vented drums and canister; Canister lid design; Limited storage. Mitigation: Procedures and Training; Ventilation system; CAMs; Emergency response procedure; Shield plug in Hot Cell is in place; Shield door crane interlock.
NC-7	Seismic event	20-1 Natural events	Seismic event (Design Basis Earthquake)	Potential for significant radioactive materials release	4	3	Prevention: WHB (and certain equipment) designed for DBE; Crane, PAR, and Hot Cell and equipment in it is DBE qualified. Mitigation: HVAC system shutdown switch, Emergency response plan and teams; Recovery plan.
NC-7	Seismic event	20-2 Natural events	Full facility fire	Potential for significant radioactive materials release	4	3	Prevention: Limited ignition sources. Mitigation: HVAC system shutdown switch; Fire loading/Combustible Control Program; Emergency response plan and teams; Recovery plan.
NC8	Tornado	20-3 Natural events	Tornado event (Design Basis Tornado)	Potential for significant radioactive materials release	4	2	Prevention: WHB (and certain equipment) designed for DBT; Weather monitored by CMR; 10-160B cask is DBT qualified Mitigation: Emergency response plan and teams; Recovery plan.

Table 5.1-11 Summary of Potential Controls for Immediate Worker Protection Page 1 of 3

Study Node/ Event (defined in HAZOP)	Radiological Rank (Cons., Freq.) (defined in HAZOP)	Preventive Feature	Mitigative Features	Mitigated Consequences
72-B Cask				
1-4	2,4		Rad Con procedures; Operator training; ALARA Program; Dosimetry; 72B cask design (contact dose rate ≤ 200 mrem/hr)	Below Guideline (≤ 5 rem)
6-1	2,4	Cask and canister design	Shuttle and shuttle support design; Operator training; Limited access into Transfer Cell; 72Bcask design (contact dose rate ≤ 200 mrem/hr)	None
7-4	2,4	Fail safe design of floor port shield; Control Loop Interlock; Pre-operational checks; Preventive maintenance	Shielding for operator at control panel	None
7-5	2,4	PLC interlock with facility cask top shield valve; Pre-operational checks; Preventive maintenance	Shielding for operator at control panel	None
14-1	2,4		Shift to HEPA filtration; Room Closure System; Canister	Below Guideline (≤ 5 rem)

Table 5.1-11 Summary of Potential Controls for Immediate Worker Protection **Page 2 of 3**

Study Node/ Event (defined in HAZOP)	Radiological Rank (Cons., Freq.) (defined in HAZOP)	Preventive Feature	Mitigative Features	Mitigated Consequences
10-160B Cask				
1A-4	2,4		Rad Con procedures; Operator training; ALARA Program; Dosimetry; Cask design (contact dose rate ≤ 200 mrem/hr); Inspection and survey in transit	Below Guideline (≤ 5 rem)
5CE-3	2,4	Preventive maintenance on crane and windows (N_2 bladders in windows have pressure relief valves); Hot cell leaded glass on outer layer	Training and Procedures	None
9-8	2,4		Training and Procedures; Personal Protective Equipment; Bag out process for HEPA filter change-out	Below Guideline (≤ 5 rem)
9-9	3,4	Administrative controls for lock and key; ARM indicators in the Hot Cell and Transfer Cell	Training and Procedures	None
10C-1	2,4	Glove box design; inspection of gloves; Preventive maintenance on Glove box	Training and Procedures	
10D-1	2,4	Interlocks prevent opening both doors (on Glove box drawer) at the same time; Glove box design; Glove box not in normal streaming path	Training and Procedures	None

Table 5.1-11 Summary of Potential Controls for Immediate Worker Protection **Page 3 of 3**

Study Node/ Event (defined in HAZOP)	Radiological Rank (Cons., Freq.) (defined in HAZOP)	Preventive Feature	Mitigative Features	Mitigated Consequences
10-160B Cask				
21-5	2,4	Program on facility heating; Redundant ventilation trains (design); 10-stage sequence heater; Emergency management loss of power; drums on floor stacked 1-high are below streaming path		None

5.2 RH TRU Accident Analysis

This section quantitatively analyzes the postulated accident scenarios selected as discussed in Section 5.1.4. The selected accidents are considered "Derivative Design Basis Accidents," (DBAs) as defined in DOE Standard 3009-94.[1] These derivative DBAs are used to estimate the response of WIPP systems, structures, and components (SSCs) to "the range of accident scenarios" that bound "the envelope of accident conditions to which the facility could be subjected" in order to evaluate accident consequences. The principal purpose of the accident analysis is to evaluate the derivative DBAs for the purposes of identifying safety (safety-class or safety-significant) SSCs and Technical Safety Requirements (TSRs) necessary to maintain accident consequences resulting from these derivative DBAs to within the accident risk evaluation guidelines. For the purposes of establishing safety SSCs, the consequences of these accidents are analyzed to a non-involved worker conservatively assumed to be 328 ft (100 m.) from each release point, and to the maximally exposed individual (MEI) located at the WIPP Exclusive Use Area boundary. An evaluation of operational "beyond" derivative DBAs (BDBA) design basis is conducted by evaluating the accident scenarios in response to the bounding conditions as derived from the TSRs, Attachment 1 to the SAR. For simplicity, the term "derivative" is dropped for the remainder of this chapter; DBA refers to derivative DBAs.

DOE Standard 3009-94[1] states that use of a lower binning threshold such as 1E-06/yr is generally appropriate, but should not be used as an absolute cutoff for dismissing physically credible low frequency operational accidents without an evaluation of preventative or mitigative features. DBAs identified in this section whose frequency are less than 1E-06/yr (beyond extremely unlikely), are also analyzed quantitatively for the sole purpose of providing a perspective of the risk associated with the operation of the facility. The results of these analysis are found in the respective accident evaluation in Section 5.2.4.

The immediate worker is that individual directly involved with the waste handling operation for which the accident is postulated. As discussed in Sections 5.1.2.1.2 and 5.1.7, the assessment of immediate worker consequences will ensure that the maximum allowable radionuclide inventory, in conjunction with the other layers of defense-in-depth, will preclude worker exposure from being unacceptable.

The models and assumptions used in the analysis for determining the amount of radioactivity released to the environment and the extent of exposure to the MEI, non-involved worker, and immediate worker are provided in the following sections. Activity releases to the environment are given for each postulated accident. Committed Effective Dose Equivalents (50 yr CEDE) were calculated for what are considered to be hypothetical individuals located: (1) MEI at the WIPP Exclusive Use Area boundary and off-site public at the site boundary (16 section boundary), (2) non-involved worker at 328 ft (100 m) from each release point, and (3) immediate worker within the immediate area of the accident. The meteorological conditions under which these doses are evaluated are discussed in Section 5.2.1.

The radioactive material in the RH waste that has the potential to be released to the off-site environment (except contamination on the 72-B canister or on the surfaces of the drums in the 10-160B cask) is contained within the 72-B waste canisters or 10-160B drums. The physical properties and assumptions for RH waste canister and drum inventories used in this analysis are presented in Section 5.1.2.

In evaluating hypothetical accidents, the level of conservatism in the safety analysis assumptions provide consequences which result in postulated releases that are overestimated rather than underestimated. The level of conservatism in each of the safety analysis variables is consistent with DOE-STD-3009-94[1]. The level of conservatism chosen provides reasonable assurance that when considering the variability in waste form, TRU activity content, and radionuclide distributions : (1) the safety envelope of the facility is defined, (2) the design of the facility is adequate in response to the accident scenarios analyzed, and (3) the TSRs derived will provide for the protection of the public, the worker, and the environment.

Based on the results of both RH HAZOPs, operational events are binned into three major accident categories, fire, explosion, and waste container breaches. Since breaches of waste containers may occur due to drop or vehicle impact, accidents involving both of these breach mechanisms are evaluated. Accidents involving waste container drops are evaluated based on the energy involved due to drop height. Due to the differences in release and dispersion mechanisms possible, accidents of each category are evaluated for the surface and Underground areas of the facility. Operational, natural phenomena and external initiating events that require evaluation as determined by the hazard analysis are listed below. Note that the events are designated as NC for the 10-160B cask and RH for the 72B cask.

1. Operational Events

Fires

- RH1 Fire in the Underground
- RH2 Fire in the WHB
- NC1 Fire in the Hot Cell
- NC2 Fire in the Underground

Waste Canister Breaches

- RH3 Loss of Confinement (LOC) in the WHB
- RH4-A LOC in the Underground (Waste Hoist Failure)
- RH4-B LOC in the Underground
- NC4 LOC in the Transfer Cell or Underground

Waste Drum Breaches

- NC3 LOC in the WHB

Explosion

- RH5 Fire Followed by Explosion in the Underground
- NC5 Explosion Followed by Fire in the Hot Cell
- NC6 Fire Followed by Explosion in the Underground

2. Natural Phenomena Events

- RH6 & NC7 Seismic Events
- RH7 & NC8 Tornado Events

3 External Events

- Aircraft Crash (applicable to both 72B and 10-160B operations)

5.2.1 Accident Assessment Methodology

5.2.1.1 Non-involved Worker and MEI Accident Assessment Methodology

Receptors

A hypothetical MEI located at the Exclusive Use area boundary (Figure 5.2-1) was selected for the accident-related consequence assessment. Review of the WIPP Land Management Plan[2] indicates that public access to the WIPP 16-section area up to the exclusive use area shown in Figure 5.2-1 is allowed for grazing purposes, and up to the DOE off limits area "for recreational purposes." Although analysis is traditionally conducted for an MEI at the facility site boundary, the assumed location of the MEI for this analysis is at the "closest point of public access," or at the boundary of the DOE "exclusive use area." The location of the MEI is also consistent with Appendix D9 of DOE/WIPP-91-005, Waste Isolation Pilot Plant RCRA Part B Permit Application, Revision 6, U.S. Department of Energy, Carlsbad, N.M. [3] Calculations are also performed using the site boundary for reference purposes.

Although the prevailing winds at WIPP are towards the northwest, the closest distance to the exclusive use area (without regard to direction) from the exhaust shaft vent and the WHB vent was used in the dose assessment calculations. The closest distance to the exclusive use area boundary from the exhaust shaft vent is approximately 935 ft (285 m) and the closest distance to the exclusive use area boundary from the WHB lies southeast at approximately 1150 ft (350 m) (Figure 5.2-2).

The non-involved worker is assumed to be a worker not directly involved with the waste handling operation for which the accident is postulated and located at a distance of 328 ft (100 m) from each release point due to the restrictions on dispersion modeling at close in distances.

Source Term Methodology

The following equation from DOE Handbook 3010-94, Airborne Release Fractions/Rates and Respirable Fractions for Nonreactor Nuclear Facilities,[4] reflects the calculation for source term:

$$Q = MAR * DR * ARF * RF * LPF$$

where:

Q	The Source Term (Ci or mg) - Total curies released.
MAR	Material At Risk, the maximum amount and type of material present that may be acted upon with the potentially dispersive energy source (Ci or mg).
DR	Damage Ratio, the fraction of the MAR actually impacted by the accident condition.
ARF	Airborne Release Fraction, the fraction of that radioactive material actually impacted by the accident condition that is suspended in air.
RF	Respirable Fraction, the fraction of the airborne radioactive particles that are in the respirable size range, i.e. less than 10 µm in aerodynamic equivalent diameter.

LPF Leakpath Factor, the cumulative fraction of airborne material that escapes to the atmosphere from the postulated accident.

The quantity MAR is calculated as the quantity (CI * CD), where CI is the waste canister or waste drum radiological or non-radiological inventory, CD is the number of canisters or waste drums damaged by the accident phenomenon (number of canisters or drums breached).

The resulting equation is:

$$Q = CI * CD * DR * ARF * RF * LPF \quad (5\text{-}1)$$

Each of the source term variables are a function of the accident phenomenon under consideration and are derived in the following discussions. The level of conservatism in each of the safety analysis variables is consistent with DOE-STD-3009-94[1] and its Appendix A.

Waste Container Radiological and Non-radiological Inventories (CI) and Containers Damaged (CD)

The source term equation radiological CI used in the accident analyses, is based on the waste characterization analyses in Section 5.1.2. As described in Section 5.1.2.1, the maximum 72-B canister radionuclide inventory that is not solidified, vitrified, or overpacked is 80 PE-Ci for direct loaded waste and 240 PE-Ci for double contained or overpacked waste. Since one 72-B waste canister is processed at a time, CD = 1 for all 72-B accident scenarios. The maximum 10-160B cask radionuclide inventory is 20 PE-Ci. The 10-160B cask can contain up to ten waste drums. As a conservative assumption, it is assumed that all of the radionuclide inventory from a single 10-160B cask is located in a single waste drum from that cask. Additionally, the RCRA permit application for WIPP allows the storage of up to six fully loaded facility canisters (each containing three waste drums) with possibly one of them partially loaded (1 or 2 drums) in the Hot Cell during processing of 10-160B casks. It is possible that the radionuclide inventory from two 10-160B casks (40 PE-Ci) may be at risk in accident scenarios that occur in the Hot Cell. It is also possible, but extremely unlikely that the three drums in a facility canister each contains the maximum radiological contents of a 10-160B cask. Therefore, the bounding activity in a single facility canister is considered to be 60 PE-Ci. For the accident analysis, the CI is set to 20 PE-Ci and the CD is determined on a scenario-specific basis (CD = 1 or 2 for drum events or CD= 3 for facility canister events) based on whether or not more than one waste drum may be at risk in the specific accident scenario being analyzed.

The three types of accident scenarios identified for quantitative analysis: (1) potential fires that can compromise the containment integrity of the waste drums and/or canisters, (2) potential explosion that can cause a breach of the waste drums and/or canisters, and (3) waste drum and/or canister breaches from drops or waste handling equipment impacts. The waste forms defined in the Baseline Inventory Report[5] (BIR) were examined to determine the types most susceptible to these scenarios. For waste drum and/or canister fire scenarios, combustible waste is defined as consisting of paper, kimwipes, and cloth (dry and damp); various plastics such as polyethylene and polyvinyl chloride; wood; and filters contaminated with trace quantities of halogenated organic solvents; and non-combustibles as sludges, filters, asphalt, soil, glass, metal, and others.

Therefore, it is conservatively assumed that during potential fire, a waste drum and/or canister could contain waste with a 95 percent combustible and 5 percent non-combustible content. Since the fire is assumed to impact a single 72-B waste canister (CD=1), the CI for the fire scenarios is 80 PE-Ci for direct loaded waste and 240 PE-Ci for double confined waste. For the 10-160B fire scenarios, NC1 and NC2, the CDs are determined in the accident analyses.

For waste drum and/or canister breach scenarios resulting from drops or impacts, the accident is characterized by a sharp impact to the waste drum and/or canister and damage to the waste canister, followed by an airborne release of radioactivity due to shock/vibration effects. The waste forms defined in the BIR[5] were examined to determine the types most susceptible to waste canister breach scenarios. Based on DOE-HDBK-3010-94,[4] non-combustible waste forms that have a hard, unyielding surface and do not undergo brittle fracture are the most susceptible to the airborne release of radioactivity in highly respirable form due to shock/vibration effects. Although DOE-HDBK-3010-94[4] bounding airborne release fraction for combustible and non-combustible waste is the same (1E-03), the respirable fraction is higher for noncombustibles (1.0) than for combustibles (0.1). Therefore, it is conservatively assumed that the breach accident scenarios occur with waste drums and/or canisters classified as containing non-combustible uncategorized metal waste, with a 95 percent non-combustible and 5 percent combustible content. As discussed earlier, at most two waste drums containing the entire radionuclide inventory from two 10-160B casks may be at risk of damage from a breach accident. Therefore, the number of drums impacted (CD = 1 or CD = 2) is determined by the specifics of the accident scenario.

Uncategorized metal waste is chosen for drop and impact scenarios due to: (1) the relatively high waste volume fraction (approximately 9 percent) of the total stored waste volume, and (2) the combustible and non-combustible fractions from the definition of the waste form in the BIR[5]. Although heterogeneous waste has the highest stored volume fraction (approximately 59 percent), based on the definitions in the BIR, uncategorized metal waste has the highest projected volume fraction (approximately 77 percent) and highest potential fraction of non-combustible waste fraction (95 percent), and is therefore more conservative for use in accident analysis calculations.

Based on the data in Table A-1 of Appendix A, use of the above values for CI and combustible/non-combustible fractions provides reasonable assurance of obtaining bounding consequences in the potential fire, explosion, and waste drum and/or canister breach accident consequence analysis.

The non-radiological CI development process for events which involve a breach of a waste canister or drum is simplified by assuming that 100 percent of the VOC headspace inventory is released instantaneously. VOCs selected for consideration for accidental releases are listed in Table 5.1-2. The values were scaled for estimating concentrations in the waste drum or canister based on the volume of the container.

Solid and liquid chemical concentrations that would be expected to be within a waste drum or canister is the same as for CH waste and are listed in Table 5.1-3. These values were scaled for estimating concentrations in the waste canister based on bounding weight of material in a waste canister. Radiological and chemical source terms developed for specific accidents are estimated using Equation 5-1.

For the radiological CI, the CD is limited to either 1 or 2 as discussed previously. However, for the non-radiological inventory, all of the waste drums are assumed to contain equal inventories. Therefore, as many as 20 waste drums could be at risk for damage and release of non-radiological hazardous material. The CD is determined for each of the accident scenarios on the basis of the specifics for the scenario. Note that this means that the CD for the radiological and non-radiological releases may be different for the same accident scenario.

Damage Ratio (DR)

Based on the discussion in Section A.3.2 of DOE-STD-3009-94,[1] material actually impacted by the accident generated conditions are acceptable for estimation of the DR. There are no releases from fires involving the 72B cask and/or canister. Since the fires included in the accident analysis for 10-160B cask processing are external to the waste drums, the amount of the combustible material that is actually burned is limited by the amount of oxidant (air) that is present in the drum to support combustion. The analysis performed for the CH TRU Central Characterization facility showed that only 16.3 percent of the combustible material in the waste drums is actually burned. As a result of the airborne release generated by the fire phenomenon, it is assumed that the conservative radiological DR for the 10-160B fire events is 1.0 (DR=1.0) while the non-radiological DR = 0.163.

For waste canister or drum breaches from drops, two specific accident conditions are examined: (1) drops from heights less than 4 ft (1.2m) ($h \leq 4$ ft [1.2m]) and (2) drops from heights equal to or less than 22 ft (6.7 m), [4 ft (1.2 m) < $h \leq 22$ ft (6.7 m)]. It is assumed that a waste canister inside the facility cask will maintain its structural integrity and its containment function if the facility cask is impacted by a forklift or if it is involved in a collision with another vehicle while being transported by a forklift.

For waste canister or drum breaches from drops, the DR is based on the extensive analysis performed for the CH waste drums. That analysis showed that for DOT Type A drums weighing 1000 pounds or less a conservative DR of 0.025 for drops of greater than 5 feet but less than or equal to 10 feet is applicable. This drop height is typical of drops from the cranes and manipulators involved in handling the waste drums from a 10-160B cask. The DR for waste drum breach accidents involving dropping a waste drum is 0.025 (DR = 0.025).

Another type of accident involving breach of a waste drum involves dropping a heavy object, such as the Hot Cell shield plug, on a waste drum. The DR is a function of the kinetic energy which is in turn a function of the weight of the dropped object. In this case, the drum is not dropped but is impacted by a dropped object. The result on the drum is the same. Since the weight of the object dropped on the drum could be more than the 1000 lbs used for the basis for the DR for dropping a waste drum, it is assumed that the DR for this case is larger than the 0.025 value for a drum drop of between 5 and 10 feet. The shield plug weight is approximately 4 times the 1000 pound weight of a waste drum, it is assumed that the impact of the shield plug on a waste drum would result in a DR four times the DR for dropping a 1000 pound waste drum the same height. It is conservatively assumed that the DR is (4 x 0.025 =) 0.1 for this event.

The other two types of accidents involving the breach of a waste drum are puncture scenarios. In one scenario, an unprotected waste drum is punctured during waste handling operations. From section 5.2.1.1 of the WIPP CH SAR[6], the DR for DOT Type A waste drum breached by impact with waste handling equipment is 0.05 (DR = 0.05). The other puncture accident involves puncturing a waste drum while contained in the 10-160B cask. Since this would require penetrating two barriers, the DR would be smaller than the DR for puncturing an unprotected waste drum. The DR for double confined waste is a factor of 10 lower than single confined waste. Based on the ruggedness of the 10-160B cask, it is conservatively assumed that the DR is a factor of 2 smaller than the DR for puncture of an unprotected waste drum. The DR for puncturing a waste drum inside a 10-160B cask is 0.025 (DR = 0.025).

For the explosion accident scenarios, there are two potential accident stresses acting on the MAR. One is the shock and blast effects of the initial explosion and the second is the thermal impact of the follow-on fire. These different stressors have different mechanisms of impacting the waste material and, therefore, have potentially different damage ratios.

The DR for the explosion accident stress is determined by the physical arrangement of the waste in the drum. The flammable gas that is generated in a waste drum collects in the headspace of the drum causing the explosive stress to act on the top portion of the waste. The waste in the lower part of the drum will be shielded from the direct shock and blast effects by the waste in the top part. The primary effect of the explosion on the material is equivalent to the phenomena of accelerated airflow parallel to the surface. This characterization of the stress indicates that only the top few inches of the waste in the drum will be subject to the stress but a conservative DR of 1.0 is used for the explosive stress.

The DR for the thermal effects of a fire on the waste drum can be limited by the lack of free air flow into the drum. However, in this case, the initial explosion will result in at least a partial structural failure of the drum which would allow more air flow to feed the follow-on fire. Based on this, the DR for the follow-on fire is conservatively assumed to be 1.0.

The explosive stress could cause shrapnel to impact waste drums stored near the drum in which the explosion occurs which could result in puncturing of nearby waste drums. Since the DR for puncture of a waste drum by waste handling equipment is 0.05, it is assumed that the same DR applies to a waste drum punctured by shrapnel generated by an explosion.

The upper limit for a drop in which waste canisters are certified (DOT Type A) to not release any of their solid waste form contents is 4 ft (1.2 m). The DR for drops of waste canisters from less than or equal to 4 ft (1.2 m) is zero (DR=0). Tests performed on Type A packaging[8,9,10,11] and their simulated contents provides useful data to estimate damage to the RH waste canisters from drops greater than 4 ft and assign an estimated DR. Since the conditions associated with the accident scenarios analyzed for the RH waste handling operations (such as waste canisters dropped by a grapple hoist or facility cask dropped by a forklift), differ from those in the relatively small amount of well-documented tests, the estimates of the amount of material released for RH waste containers for the postulated accident conditions are based primarily on the structural assessment provided in PLG-1305, Remote Handled Transuranic Waste Container (RH TWC) Structural Analyses for Postulated Handling Accidents.[12]

This analysis looked at several scenarios for damaging the 72B canister which included drops of greater than 4 ft and damage resulting from motive force provided by the system and involve the slow crushing of the container.

The bounding drop scenario involved a slightly inclined drop of a direct loaded 72B canister, resulting in an edge hit on the inside rim of the road cask opening. The canister suffers sufficient damage to allow 100 percent of the contained waste to fall into the 72B cask. The bounding DR for directly loaded 72B canister after an inclined drop is 1.0 (DR=1.0).

The 72B canister can hold three 55-gallon drums of RH waste. For conservatism, it is assumed that all of the waste is in the bottom drum, and that drum is impacted by the accident conditions and releases 10 percent of its contents. Assuming a conservative DR for drum of 0.1 and 1.0 for the 72B canister, a conservative DR for an inclined drop of a 72B canister containing 3 55-gal drums would be 0.1 x 1 = 0.1 (DR=0.1).

The crushing scenarios were modeled to produce rupture, or almost rupture in order to determine the force required to produce a release. A force of 11,000 lbs on the shuttle car with a canister partially in the road cask/shielded insert would be required to produce a bending that does not cause rupture in the canister. This is much more than the force of approximately 2000 lbs required to move the shuttle car between transfer positions. A second crushing scenario involved accidental closing of a shield valve on a canister. Calculations show that 39 kips (almost 20 tons) of force must be exerted by a shield valve closure in order to initiate a canister rupture. The force required to simply open and close the shield valve is approximately 500 lbs. Passive and active engineered design features which prevent these scenarios from occurring are described in section 5.2.3.3.

For the waste hoist accident scenario which involves a facility cask, containing a waste canister, drop of over 2,000 ft (609.6 m), it is conservatively assumed that breach of the facility cask and waste canister occurs resulting in a bounding DR of 0.25 for direct loaded waste and 0.025 for double confined waste.

Airborne Release (ARF) and Respirable (RF) Fractions

Based on the discussion in Section A.3.2 of Appendix A of DOE-STD-3009-94,[1] bounding values for the ARFs and the RFs are utilized based on DOE-HDBK-3010-94.[4] The ARF for the burning of contaminated combustible materials in a waste canister is 5.0E-04 and the ARF for non-combustible materials in a canister is 6.0E-03. These values represent bounding ARFs for the burning of contaminated packaged mixed waste and the heating of non-combustible contaminated surfaces (DOE-HDBK-3010-94, subsections 5.2.1.1 and 5.3.1).[4] The bounding RFs for the burning of contaminated packaged mixed waste and the heating of non-combustible contaminated surfaces are 1.0 and 1.0E-02, respectively (DOE-HDBK-3010-94, subsection 5.2.1.1 and 5.3.1).[4]. The bounding value for ARF for burning of contaminated packaged mixed waste is a conservative value. Some of the conservative factors involved in the determination of the ARF as they apply to this analysis include:

- The experiments on which the determination of ARF are based were designed to represent loosely packed waste in cardboard boxes. The waste drums that will be temporarily stored in the Hot Cell are much more substantial (DOT Type A containers). Therefore, the experiments described in DOE-HDBK-3010-94[4] used to determine the ARF for burning of packaged combustible waste is conservative for the case being analyzed here.

- Gram quantities were used in the experiments rather than kilogram quantities in the RH waste containers. The gram quantities of material in the experiments did not provide the depth of burn residue that may attenuate the airborne releases from large quantities of material. The waste in the waste drums in this analysis is representative of large quantities of material (up to 1000 lbs (454 kg) per drum). Additionally, the packaging of the waste in a DOT Type A container will limit the area of the waste material exposed to the flame. The experiments described in DOE-HDBK-3010-94[4] used to determine the CARF for combustible packaged waste are conservative for the accidents analyzed in this SAR.

- The radionuclides in the experiments were freshly applied and emphasized the goal of maximizing release. The experimental configuration did not allow the contaminant material to attain the degree of adhesion and packing expected for real stored waste and are, therefore, conservative for the accidents analyzed here.

- The experimental configuration, from which the ARF values were obtained, consisted of burning pre-contaminated wastes packaged in plastic bags, sealed in an 18 in x 18 in x 24 in cardboard box on a grill in a 10 ft diameter by 10 ft high stainless steel vessel. In the accidents analyzed here, the volume in which the fire occurs is the Hot Cell which is much larger than the steel vessel used in the experiments.

- The ARF in DOE-HDBK-3010-94[4] does not include the effects of deposition. Since the Hot Cell has significant deposition surface area, deposition of any particulates generated in the fire may be significant. Therefore, the ARF in DOE-HDBK-3010-94[4] is conservative for the accidents analyzed here.

Even though the bounding value of 5.00E-04 for the ARF has the above conservatisms, it was used in the analysis to ensure adequate margin in the results.

The bounding ARF value of 6.00E-03 for the non-combustible solid waste material, is taken directly from page 5-5 of DOE-HDBK-3010-94.[4]

Median ARFs can also be used to calculate the Source Term for onsite assessments (although the more conservative bounding values were used in this analysis). The median ARF for a combustible material in a waste container is 8.00E-05. No median ARF for a noncombustible material is provided in DOE-HDBK-3010-94[4]. Both combustible and noncombustible ARFs for liquids in a chemical release are set equal to 1.0.

The bounding RFs for burning contaminated packaged mixed waste and the heating of noncombustible contaminated surfaces are 1.0 and 1.0E-02, respectively (DOE-HDBK-3010-94, subsection 5.2.1.1 and 5.3.1).[4] The RF for combustible and noncombustible liquid hazardous materials are both set equal to 1.0. Since the liquids are assumed to vaporize under the thermal stress of the fire, all of the material vaporized will be respirable.

The ARF for contaminated combustible materials, subjected to impact and breach of a waste drum or canister, is 0.001. This value represents a bounding ARF for packaged material in a drum or canister which fails due to impact (DOE-HDBK-3010-94, subsection 5.2.3.2).[4] The bounding RF applied to airborne combustible material released due to impact is 0.1 (DOE-HDBK-3010-94, subsection 5.2.3.2).[4] The ARF and RF for combustible waste forms are conservatively applied to the combustible fraction of material for accident consequence analyses for the waste drum or canister impact or drop scenarios.

The ARF for contaminated non-combustible materials, subjected to impact and breach of the waste canister for solids that do not undergo brittle fracture, is 0.001. This value represents a bounding ARF for packaged material in a canister which fails due to impact (DOE-HDBK-3010-94, subsection 5.3.3.2.2).[4] The bounding RF for contaminated non-combustible materials, subjected to impact and breach of the waste drum or canister, is 1.0 (DOE-HDBK-3010-94, subsection 5.2.3.2).[4] Therefore, the ARF and RF for non-combustible waste forms are conservatively applied to the non-combustible fraction of material for accident consequence analyses for the waste drum or canister impact or drop scenarios.

The aerodynamic entrainment and resuspension of the waste material is not considered because should an accident involving a breach of a waste canister occur, the plant design permits the immediate cessation of activity and isolation of the area where the breach occurs. Once isolation is achieved, there is no driving force within the waste or waste handling area that could result in a further release of the waste material. In order to ensure protection by the identified SSCs during recovery from an event that breaches a waste canister, the Defense-In-Depth SSCs for the waste handling mode will be required during the period of time that waste may be exposed.

For the explosion inside a waste drum accidents, for both the combustible and non-combustible solid waste, ARFs for both the initial explosion and the follow-on fire are required. For combustible waste, page 5-3 of DOE-HDBK-3010-94[4] lists a bounding ARF of 1E-03 for combustible waste exposed to the shock and blast effects of an explosion. For the non-combustible waste, the ARF depends on pressurization that occurs due to the explosion. Since the initial explosion in this event occurs in the head space of a waste drum, pressurization of the drum will occur. However, based on the design of the drums, the likelihood that the lid will fail due to pressurization, and previous analysis of CH waste drums, it is assumed that the drum does not pressurize beyond 25 psig. Therefore, from page 5-6 of DOE-HDBK-3010-94[4], the ARF for non-combustible contaminated material exposed to the blast and shock effects of an explosion at a pressure less than 25 psig is 5.0E-03. (Note that there is a typographical error on page 5-6 of DOE-HDBK-3010-94[4]. It lists the ARFs for pressurization less than and greater than 25 psig. The values in DOE-HDBK-3010-94[4] are reversed. The ARF of 5.0E-03 is correct for pressures less than 25 psig. (This error also applies to the RF.)

For the follow-on fire, the ARFs determined to apply to the fire event previously discussed are assumed to apply to the follow-on fire.

Median ARFs can also be used to calculate the Source Term for onsite assessments (although the more conservative bounding values were used in this analysis). The median ARF for a combustible material in a waste container exposed to the thermal effects of a fire is 8.0E-05. DOE-HDBK-3010-94[4] does not provide the median ARF for a non-combustible material exposed to a fire or for combustible or non-combustible material exposed to the shock and blast effects of an explosion. Therefore, the bounding values are used for those materials in the calculation of the median on-site source term and consequences. For liquids in a chemical release, the ARF is set equal to 1.0. Again, the liquids are assumed to be released in the fire.

The RFs for the combustible solids and non-combustible solids for the explosion accident scenarios are taken directly from DOE-HDBK-3010-94[4]. For the initial explosion, the RF for the combustible material is 1.0 (page 5-3) and the RF for the non-combustible material is 0.4 (page 5-6). For the follow-on fire, the RF for the combustible material is 1.0 (page 5-1) and the RF of the non-combustible material is 0.01 (page 5-5). For the liquid hazardous materials for the follow-on fire, the RF is set equal to 1.0. Since the liquids are assumed to vaporize under the thermal stress of the fire, all of the material vaporized will be respirable.

Leakpath Factor (LPF)

Specific source terms for the postulated accident scenarios described in the accident analysis represent the total amount of respirable radioactive material released to the environment from a postulated accident. The LPF for WIPP accident scenarios is that fraction of the airborne material released in the WHB that is not filtered out by the permanently installed continuously on-line two-stage HEPA filtration system, or for Underground releases, by the Underground exhaust HEPA filtration system when shift to filtration is actuated manually or automatically. Based on the discussion in Section A.3.2 of Appendix A of DOE-STD-3009-94,[1] realistic values are acceptable for estimation of the LPF. Credit for HEPA filtration is taken during the evaluation of the consequences for a mitigated accident. The amount of material removed from the air due to the HEPA filters is based on decontamination factors (DF). DFs have been predicted for accident conditions in ERDA Nuclear Air Cleaning Handbook.[14] Based on the handbook, a DF of 5.0E+02 for the first stage and 2.0E+03 for the second stage are recommended. The total DF used in this analysis for both stages of filtration is 1.0E+06. The LPF is 1.0E-06 for the mitigated case, and 1.0 for the unmitigated case.

The LPF assumed for the release of the non-radiological hazardous material is 1.0 (mitigation is not assumed). However, for fire scenarios, a LPF of 0.5 is assumed to apply to the release of liquid mercury vaporized by the fire. The LPF due to the HEPA filters is only applicable to the material released as particulates. The liquid hazardous material is vaporized due to the thermal stress of the fire. The HEPA filters are not effective in removing vapor. Plateout is one mechanism that removes some of the vaporized material from the air. Plateout is essentially condensation of the vapor back to its liquid form as the air temperature cools or the vapor encounters cooler surfaces. The fire accident analysis for the WIPP CH TRU Central Characterization system[13] contains an analysis of the impact of plateout on the mercury vaporized due to the thermal stress of a fire. Based on that analysis, a conservative LPF value of 0.50 for the plateout of mercury is used. All of the other liquid hazardous materials in the waste except PCBs have much lower boiling points than mercury (40 to 120 °C vs. 357 °C for mercury). Therefore, the other non-PCB liquid materials will not condense out of the air until much lower air temperatures are reached. The LPF for the non-mercury liquid hazardous materials is set to 1.0. The LPF for the PCBs is also conservatively set to 1.0.

Dispersion Modeling Methodology

Nuclear Regulatory Guide (NRG) 1.145,[15] "Atmospheric Dispersion Models for Potential Accident Consequence Assessments at Nuclear Power Plants," methodology was used to develop the atmospheric dispersion coefficients to assess accidental releases from the WIPP Underground exhaust shaft and the WHB exhaust vent. NRG 1.145[15] provides an NRC acceptable methodology to determine site-specific relative concentrations, χ/Qs, and the model reflects experimental data on diffusion from releases at ground level at open sites and from releases at various locations on reactor facility buildings during stable atmospheric conditions with low wind speeds.

The relative concentration value or the atmospheric dispersion coefficient (χ/Q) is the time integrated normalized air concentration at the receptor. It represents the dilution of an airborne contaminant due to atmospheric mixing and turbulence. χ/Q is the ratio of the average contaminant air concentration at the receptor to the contaminant release rate at the release point. It is used to determine the dose consequences for a receptor based on the quantity released (i.e., the source term), atmospheric conditions, and the distance to the receptor of interest.

The atmospheric dispersion coefficient, χ/Q, is a ratio of the air concentration, χ, to the release rate, Q. The χ/Q values in this report were generated using a computer program called GXQ[16]. The GXQ program has been verified to produce χ/Q values consistent with NRG 1.145[15] methodology. The GXQ program used WIPP site specific three-year averaged meteorological data (1996-1999) obtained at the site meteorology tower. All GXQ atmospheric dispersion coefficients were generated using the methods described in the NRG 1.145[15] regulatory position 3, as recommended in Section A.3.3 of Appendix A of DOE-STD-3009-94[1]. The only correction for which credit is taken in the GXQ model is for building wake and plume meander, as described in the NRG 1.145[15] model. This approach is conservative because these corrections theoretically increase the airborne concentration at the downwind receptor locations.

Two types of release models are provided in NRG 1.145:[15] (1) releases through vents or other building penetrations; and (2) stack releases. All release points or areas that are effectively lower than 2.5 times the height of adjacent solid structures are considered nonstack releases. Release points that are at levels 2.5 times the height of adjacent solid structures or higher are considered stack, or elevated releases. Applying this criteria to the WIPP underground exhaust shaft and the WHB exhaust vent, the releases are considered as nonstack releases.

Onsite receptors are assumed to be located 328 ft (100 m) from the release point. The site boundary χ/Q values are based on the distance from the release point to the WIPP Site boundary (see Figure 5.2.1), and exclusive use χ/Q values are based on the distance from the release point to the Exclusive Use Area boundary (see Figure 5.2.2). For assessing the consequences of postulated accidental releases from the Underground exhaust or the WHB, the following conditions are assumed:

1. NRG 1.145[15], Releases through Vents or Other Building Penetrations release model, regulatory position 1.3.1
2. Atmospheric Conditions
   - WIPP Site three-year averaged meteorological data
   - A-F stability
3. Dimensions (smallest cross section) of the Filter Building and the WHB:
   - Filter Building - 23 ft (7 m high), 88.6 ft (27 m) wide
   - WHB - 63 ft (19.2 m) high, 157 ft (47.8 m) wide

The GXQ program produced the following atmospheric dispersion coefficients (χ/Q) (s/m^3); [17]

Distance	Underground Exhaust	WHB Exhaust
328 ft (100 m)	4.50E-03	5.07E-03
Exclusive Use	4.21E-04	4.00E-04
Site Boundary	2.91E-05	2.98E-05

Consequence Methodology

Consequence assessment calculations are determined for the: (1) MEI located at the Exclusive Use Area boundary and (2) the non-involved worker (328 ft [100 m]) for releases from the WHB vent and the exhaust shaft vent. Atmospheric transport is the only significant release and exposure pathway during normal operations and accident conditions during the disposal phase. Based on the site characteristics information in Chapter 2, surface water and groundwater transport from normal or accidental releases of radioactive material is not considered likely. Human exposure pathways from the airborne radioactive material include inhalation, air immersion, ingestion, and ground-shine. Radiological dose consequences are calculated assuming the inhalation pathway in Committed Effective Dose Equivalent (CEDE) and are calculated using Equation 5-5.

External (ground-shine and air immersion) and ingestion dose calculations are not performed due to their minimal contribution to the Total Effective Dose Equivalent (TEDE). Section A.3 in Appendix A of DOE-STD-3009-94[1] states that the airborne pathway is of primary interest in the non-reactor nuclear facilities, therefore CEDE will be reported as the dose consequences for each accident evaluated. The calculated dose in CEDE is then compared to the non-involved worker and MEI radiological risk evaluation guidelines discussed in Section 5.2.2 (Tables 5.2-4a).

For non-radiological consequence calculations, the chemical concentration at the MEI and non-involved worker in mg/m^3 is calculated using Equation 5-6 for comparison with the non-radiological risk evaluation guidelines discussed in Section 5.2.2 (Table 5.2-2).

Detailed spreadsheets for the source term and consequence calculations for each postulated accident are found in Appendix E and summarized in Tables 5.2-3a, 5.2-3b, 5.2-4a and 5.2-4b. To assess the potential releases of radiological and non-radiological material the following equations were utilized:

Radiological Releases

$$\mathbf{D = Q * \chi/Q * BR * DCF} \qquad \textbf{(5-5)}$$

where:

D Radiological dose (CEDE) (rem)

Q Radiological Source Term (Ci)

χ/Q Atmospheric dispersion coefficients calculated for specific distances (s/m^3).

BR Breathing rate (standard man) (m^3/s) International Commission on Radiological Protection (ICRP) No.23[18] (Light activity 5.3 gallons/min [20.0 liters/min or 3.33 E-04 m^3/s]

DCF Dose Conversion Factor (rem/Ci) Internal Dose Conversion Factors for Calculation of Dose to the Public[19] (Pu-239 Class W CEDE Inhalation 5.1E+02 rem/uCi or 5.10E+08 rem/Ci)

Chemical Releases

$$\mathbf{C = (Q * \chi/Q)/RR} \qquad \textbf{(5-6)}$$

where:

C Concentration (mg/m^3)

Q Chemical Source Term (mg) (Tables 5.1-2 and 5.1-3)

RR Release time - VOC releases assumed as instantaneous (1 sec), for potential fire scenarios assumed a release duration of 900 sec

χ/Q Atmospheric dispersion coefficients calculated for specific distances (s/m^3).

According to the Chemical Assessment methodology, an unmitigated peak 15-minute (900 seconds) average chemical concentration is compared against the guidelines found in Toxic Chemical Hazard Classification and Risk Acceptance Guidelines for the use in DOE Facilities [20.] The actual release of chemicals during an explosion would occur in a much shorter duration (a second or less). The VOCs are assumed to be released instantaneously for the waste drum breach accidents.

Frequency Determination Methodology

The methodology for verifying the annual occurrence frequencies, qualitatively estimated in the HAZOP, of operational initiating events is based on the evaluation of process events, human error, and equipment failures. Section 5.2.3 and Appendix D contain the detailed assessment of occurrence frequencies of the accidents evaluated. Table D-1 presents the estimated occurrence frequencies for process events, equipment failures, and human errors, based on existing references and engineering judgement. The table

provides cross references to documents from other DOE sites with similar operations, and from generic industry data bases that have been judged to be applicable and appropriate for use in WIPP accident scenarios.

Equipment failure rates and human error probabilities were combined with WIPP specific operational data to obtain WIPP specific initiating event occurrence frequencies. The individual scenario is discussed in Section 5.2.3, and the supporting detailed event tree/fault tree analysis for each postulated accident is included in Appendix D.

The annual occurrence frequencies derived from the event tree/fault tree analysis are not intended to represent detailed probabilistic calculations requiring sensitivity or uncertainty analysis. They are used to provide reasonable assurance that each scenario's accident frequency is in a specific qualitative frequency range or "bin" for the purposes of selecting an appropriate risk evaluation consequence guideline.

To estimate the occurrence frequencies, logic models were used to describe combinations of failures that can produce a specific failure of interest (TOP event). The logic is developed and explained in Section 5.2.3. The basic events documented in Table D-1 provide specific component failure or human error rates which provide input to the logic model to calculate the frequency of the TOP event. Logical AND (*) or OR (+) functions (gates) are used to show how events can combine to cause the TOP event. The TOP event is quantified in the top row of the appropriate table, with the equation delineating the logic by which it was developed and any necessary comments. Each contributor to that equation is then developed in subsequent rows, using references as necessary to the basic events documented in Table D-1 to complete the line of reasoning. The basic event probabilities were taken either from Table D-1or the generic probability databases developed for Savannah River Site.[32]

5.2.1.2 Immediate Worker Accident Assessment Methodology

The assessment of the immediate worker accident consequences is based on the evaluation of operational waste handling scenarios, whose frequency is greater than 1E-06/yr, that may be initiated by waste handling equipment failure or directly through human error by a worker performing a waste handling operation. The immediate worker is that individual directly involved with the waste handling operation for which the accident is postulated. Although procedures dictate that workers exit the area immediately, such accidents present an immediate risk due to the inhalation of airborne radionuclides to the worker performing the waste handling operation.

Receptors

The majority of the accidents analyzed for the 10-160B cask processing operations occur in either the Cask Unloading Room (CUR), the Hot Cell, or the Transfer Cell. These areas involve only remote handling operations. Workers are not present in these rooms when waste is present. Therefore, there is no possibility of immediate worker exposure for accidents that occur in these rooms. The only accident scenarios that could result in the exposure of immediate workers for 10-160B cask processing are those that occur in the RH Bay where the cask is received, inspected and the lid bolts are loosened. Immediate worker consequences are only considered for the accident scenarios that occur in the RH Bay for 10-160B cask processing.

Evaluations of situations such as disabled worker scenarios, are not performed for the type of accident breach scenario being analyzed (10-160B cask drop or puncture in the RH Bay or grapple hoist drop). Based on the HAZOP results and the accident scenario descriptions in Section 5.3, the conditional likelihood of scenarios involving a worker failing to follow procedure to leave the area immediately, or a

coincident worker (immediate waste handler) injury during the drop scenario or the puncture scenario, are extremely unlikely compared to receiving a survivable, specified radiological consequence. The frequency of the scenario analyzed plus conditional likelihood of failing to follow procedure or immediate worker injury would be beyond extremely unlikely.

For the assessment of consequences to workers in the Underground accident scenarios, due to: (1) the ventilation flow path in the Underground disposal rooms and exhaust drifts, and (2) the waste emplacement process (Section 4.3), the receptor of concern is a hypothetical worker who may be in the exhaust drift at the time a RH waste handling accident occurs. WIPP procedure WP 04-AD3013, Underground Access Control[22], prohibits personnel access to the disposal area exhaust drift during waste handling operations. For the Underground waste canister breach scenarios, due to the high ventilation flow rate the workers are conservatively assumed to be exposed to the entire contaminated volume of air before exiting the area. With an assumed exhaust drift velocity of 2 ft (0.6 m) per second (assuming a flow rate of 883 ft^3 [25 m^3] per second and exhaust drift dimensions of 33 ft x 13 ft [10 m x 4 m]), it is conservatively assumed that workers are exposed to the undiluted radioactive cloud at a normal working breathing rate for one second.

For fire release scenarios, due to the extended release time (900 seconds assumed), and the assumption that worker exposure in both the WHB and Underground is for a period of 10 seconds, the accident scenario source terms for the fire scenarios are adjusted by the factor: (exposure time / release time) or (10 secs/900 secs).

Source Term Methodology

The accident scenario specific source term for immediate worker accident assessments is the "no-mitigation" source term developed for the noninvolved worker and MEI accident assessments.

Frequency Determination Methodology

The frequency of each accident analyzed for immediate worker consequences is the "no mitigation" frequency in each detailed event tree/fault tree analysis for each postulated accident is included in Appendix D.

Consequence Modeling Methodology

The onsite and offsite dose model (Equation 5-5) is modified for immediate worker consequence assessment as follows:

Radiological Releases

$$\mathbf{D = (Q * T * BR * DCF)/V} \qquad \textbf{(5-7)}$$

where:

D Radiological dose (Committed Effective Dose Equivalent (CEDE)) (rem)

Q Radiological Source Term (Ci) (Appendix E)

T Exposure Time (1 sec)

BR Breathing rate (standard man) (m^3/s) International Commission on Radiological Protection (ICRP) No.23[18] (Light activity 5.3 gallons/min [20.0 liters/min or 3.33 E-04 m^3/s])

DCF Dose Conversion Factor (rem/Ci) Internal Dose Conversion Factors for Calculation of Dose to the Public[19] (Pu-239 Class W CEDE Inhalation 5.1E+02 rem/uCi or 5.10E+08 rem/Ci)

V = Volume in which radionuclides are released (m^3)

For breach of waste canister due to drop, the release in the WHB occurs in the Transfer Cell. No immediate worker consequences are calculated for this scenario because the operation is done remotely and there are no immediate workers in the Transfer Cell. Additionally, the Transfer Cell is maintained at negative pressure relative to the surrounding areas so that ventilation flows into the Transfer Cell.

This model is further modified to account for the expanding nature of the contamination "cloud" within the WHB. The expanding cloud model modifies the above equation as follows:

$$\mathbf{V = 2/3\pi r^3} \qquad \textbf{(5-8)}$$

where:

V Volume of hemisphere of air (m^3)

r Radius of hemisphere = a * t

a = cloud expansion rate, 0.82 ft/s (0.25 m/s)

t = time after accident (seconds)

therefore:

$$\mathbf{V = 2/3\pi(a * t)^3 = 2/3\pi a^3 t^3} \qquad \textbf{(5-9)}$$

Substituting the above equation for V into the earlier equation 5-7 and integrating with respect to time results in the following:

$$\mathbf{D = (Q * BR * DCF) * [3/(4\pi a^3)] * (T_1^{-2} - T_2^{-2})} \qquad \textbf{(5-10)}$$

where:

T_1 = Time cloud is encountered by the immediate worker (seconds)

T_2 = Time the exposure ends (the time the worker leaves the immediate area) (seconds)

In this analysis, the event scenarios involving potential exposure to workers in the immediate area occur in the RH Bay cask receiving area. The source term release cloud generated by the breach of the waste drums contained in a 10-160B cask is modeled as a hemisphere expanding at the ventilation flow rate. It is assumed that the ventilation system in the RH Bay cask receiving area will maintain a flow rate of 0.25 m/sec. For the breach of a 10-160B cask, the initial cloud is assumed to have the same volume as the volume of the 5 waste drums in the 10-160B cask that are subject to damage or 275 gallons or (275 gallons * 0.00378 m^3/gallon =) 1.04 m^3. Assuming the initial cloud is in the shape of a hemisphere, the radius of the initial cloud is $((3/2 * 1.04\ m^3)/\pi)^{0.33}$ =) 0.794 m. At 0.25 m/sec, it will take approximately 3 seconds for the initial cloud to form (for the material to be released from the waste drums and 72B cask). It is assumed that the nearest worker to the 10-160B cask at the time of the breach is three meters from the cask. Therefore, it will take (3 m/0.25 m/s =) 12 seconds for the cloud to reach the nearest worker. The total time from the accident to the initiation of the exposure to the worker is (3 s + 12 s =) 15 seconds. For this analysis, it is assumed that after a release has occurred (after the accident has initiated) the immediate workers will identify that the release is occurring and leave the immediate area within 30 seconds. The 30 second time period is the same as that used in the WIPP CH SAR accident

analysis[6]. The 30 seconds is based on 10 seconds to stop the waste handling activity once the accident has occurred and 20 seconds to examine the cask or drums and determine a breach has occurred and begin to exit from the area. The 30 second time frame specifically excludes a disabled worker scenario (a worker injured by the accident). Therefore, the worker will be exposed to the cloud from 15 seconds (T_1 in the equation 5-10) when the cloud reaches him to 30 seconds (T_2 in the equation 5-10) when he leaves the area. Substituting these values into the above equation and reducing:

$$\mathbf{D = (Q * 3.33E\text{-}04\ m^3/s * 5.1E{+}08\ rem/Ci) * [3/(4\pi(0.25\ m/s)^3)] * ((15\ s)^{-2} - (30\ s)^{-2})} \qquad \mathbf{(5\text{-}11)}$$

$$\mathbf{D = Q\ (Ci) * 8.65E{+}03\ (rem/Ci)} \qquad \mathbf{(5\text{-}12)}$$

This is the form of the consequence equation that will be used in this analysis to determine the radiological dose to the immediate worker due to the accidents occurring while processing a 10-160B cask.

For the assessment of consequences to workers in the Underground, the source term is assumed to be released instantaneously into a slug of air with a volume of 850 ft^3 (24 m^3). This volume is based on an instantaneous release and the assumed ventilation flow rate of 2 ft [0.6 m] per second, and the dimensions of the underground exhaust drift, or

V = (2 ft/s [0.6 m/s]) * (1 sec) * (33 ft [10 m]) * (13 ft [4 m]) = 24 m^3.

A volumetric flow of 25 m^3 was used for the assessment of consequences to the workers in the Underground and for Waste Hoist accidents.

5.2.2 Off-site and On-site Risk Evaluation Guidelines

The evaluation guidelines that are established should not be regarded as a "bright line" criterion and doses challenging the guidelines or in the rem range should indicate the need to consider classifying preventative or mitigative SSCs as safety class.

Guidelines do not exist for the frequency range of beyond extremely unlikely (frequency ≤ 1E-06/yr). The consequences of accidents in that range are conservatively evaluated against the guidelines for the extremely unlikely range for the sole purpose of evaluating the risk associated with facility operations.

5.2.2.1 Radiological Risk Evaluation Guidelines

Off-site radiological dose criteria for accident analyses have been well established by national standards through the licensing process of nuclear facilities regulated by the NRC. These criteria are based on the probabilities of occurrence of the accidents or events hypothesized for the accident analysis. For nuclear power plants, the operational accidents or events are classified as Plant Conditions (PC) in accordance with the estimated frequency of occurrence.[23, 24] This established scheme (ANSI/ANS-51.1)[23] has been adopted by the WIPP to compare accidental releases from postulated events to dose limits based on estimated frequency of occurrence. Table 5.2-1a summarizes the risk evaluation guidelines for the assessment of off-site radiological exposures.

The same approach is used for the on-site risk evaluation guidelines as for the off-site (public) dose. The on-site risk evaluation guidelines are greater than those for the public by assuming that entry onto the site implies acceptance of a higher degree of risk than that associated with the off-site public. This assumption is not considered remiss with regards to safety assurance because the on-site risk evaluation guidelines do not result in any health effects noticeable to exposed individuals at frequencies greater than 1 E-4 event per year and would not result in any acute life-threatening effects.

For accidents with an estimated frequency between 1E-1 and 1E-2 event per year, the limit is 5 rem (50 mSv) based on the allowable yearly worker exposure limits cited in 10 CFR 835.[25] For the estimated frequency range of 1 E-2 to 1 E-4 event per year, the threshold is 25 rem (250 mSv) for the same reason the NRC provided in 10 CFR 100[26] for using it for design basis reactor accident calculations (value at which no significant health effects result).

Accidents with an estimated frequency range of 1 E-4 to 1 E-6 event per year have a limit of 100 rem (1 Sv). The DOE Emergency Management Guide for Hazards Assessment[27] uses 100 rem (1 Sv) whole body exposure as a threshold for early severe effects. It also acknowledges that early severe effects would not actually be experienced for a 50-year *dose* of 100 rem (1 Sv) due to alpha emitters.

5.2.2.2 Non-radiological Risk Evaluation Guidelines

DOE orders do not contain a unique set of approved non-radiological risk evaluation guidelines. The WIPP non-radiological risk guidelines are based on Emergency Response Planning Guidelines (ERPGs) published by the American Industrial Hygiene Association (AIHA). ERPGs are estimates of concentration ranges for specific chemicals above which acute (< 1 hour) exposure would be expected to lead to adverse health effects of increasing severity for EPRG-1, -2, and -3. The definitions of ERPGs are:

ERPG-1 The maximum concentration in air below which it is believed nearly all individuals could be exposed for up to one hour without experiencing other than mild transient adverse health effects or perceiving a clearly defined objectionable odor.

ERPG-2 The maximum concentration in air below which it is believed nearly all individuals could be exposed for up to one hour without experiencing or developing irreversible or other serious health effects or symptoms that could impair their abilities to take protective action.

ERPG-3 The maximum concentration in air below which it is believed nearly all individuals could be exposed for up to one hour without experiencing or developing life-threatening health effects.

ERPGs have been developed for approximately 100 chemicals and do not exist for some of the chemicals found in TRU mixed waste. Chemicals without established ERPG values will use Temporary Emergency Exposure Limits (TEELs) developed by the DOE Emergency Management Advisory Committee's Subcommittee on Consequence Assessment and Protective Action (SCAPA), Revision 18, Table 4. SCAPA developed TEELs to allow for the preliminary identification of hazardous or potentially hazardous situations for emergency planning even when ERPGs were not available. The TEEL is an interim parameter meant to approximate an ERPG so that emergency planning and preparedness activities can be conducted. Whenever an ERPG is developed for a new chemical, the ERPG replaces the TEEL. The definitions of TEELs are:

TEEL-0 The threshold concentration below which most people will experience no appreciable risk of health effects;

TEEL-1 The maximum concentration in air below which it is believed nearly all individuals could be exposed without experiencing other than mild transient adverse health effects or perceiving a clearly defined objectionable odor.

TEEL-2 The maximum concentration in air below which it is believed nearly all individuals could be exposed without experiencing or developing irreversible or other serious health effects or symptoms that could impair their abilities to take protective action;

TEEL-3 The maximum concentration in air below which it is believed nearly all individuals could be exposed without experiencing or developing life-threatening health effects.

The chemicals and hazardous materials in the RH waste that do not have ERPG values will substitute the TEEL value in lieu of the ERPG value:

ERPG-1 TEEL-1

ERPG-2 TEEL-2

ERPG-3 TEEL-3

5.2.3 Accident Analysis

5.2.3.1 RH1 Fire in the Underground

Scenario Description - The HAZOP[28] postulated a waste canister breach from a fire in the Underground facility. The HAZOP postulated two hazardous events (9-7 and 10-2) that could result in a fire in the Underground facility which could cause a significant release of radioactivity.

Hazardous event 9-7 postulates a diesel fuel fire on forklift during the transfer of facility cask to disposal room. The forklift usually has about 20 gal (75.7 L) of diesel fuel. The cause of this event is a diesel fuel leak. An ignition source could ignite the fuel and cause a fire. The fire could potentially damage the facility cask and waste canister and cause a breach of the waste canister because neither the facility cask or the waste canister are qualified for a fire. The thermal stress on the breached waste canister could cause a significant release of radioactivity. The immediate worker(s) could also receive a significant direct radiological exposure from the breached waste canister.

The hazardous event 10-2 postulates a hydraulic oil fire on the Horizontal Emplacement and Retrieval Equipment (HERE) during emplacement of the waste canister in the borehole. The HERE usually has about 40 gal (151.4 L) of hydraulic oil.[29] The cause of this event is a hydraulic oil leak. An ignition source could ignite the hydraulic oil and cause a fire. According to Material Safety Data Sheet (MSDS), the hydraulic oil is slightly flammable (NFPA rating of 1).[30] The fire could potentially damage the facility cask and waste canister and cause a breach of the waste canister because neither the facility cask or the waste canister are qualified for a fire. The thermal stress on the breached waste canister could cause a significant release of radioactivity. The immediate worker(s) could also receive a significant direct radiological exposure from the breached waste canister.

Preventive and Mitigative Features - General preventive and mitigative measures identified in the HAZOP for this specific scenario are listed in Table 5.1-10.

Estimated Frequency - The HAZOP Team qualitatively estimated the frequency of occurrence of a fire in a waste canister in the Underground facility to be in the anticipated range ($10^{-1} \geq$ frequency$>10^{-2}$) for both

the hazardous events. However, based on a quantitative evaluation using conservative assumptions documented in Appendix D and below, the overall frequency of breach of waste canister due to fire from forklift operations in the Underground (event 9-7) is beyond extremely unlikely (frequency $\leq 10^{-6}$/yr). Risk evaluation guidelines are not identified for events with frequency $\leq 10^{-6}$/yr.

The *Source Term Development* will show that there is no release from event 9-7, however, the frequency of the fire is calculated in Table D-1 for reference in the BDBA scenario, RH 5. This section discusses the evidence and reasoning used to develop and quantify the frequency. The scenario is initiated by a diesel fuel leak from the forklift. An ignition source of sufficient magnitude is needed to start a fire. A sustained fire could then cause a breach of waste canister contained in a facility cask. The quantification of each of these contributors is:

1. Frequency of leak or collision accidents in the Underground

The frequency of leak or collision accidents in the Underground is 3.3E-03/yr. It is a product of the number of forklift operations per year (N_forklift_UG) times the probability of puncture events during waste handling operations in the Underground (f_punct_UG). The conservative throughput of waste canisters is 693/year which translates to 693 forklift operations per year (693 op/yr). The puncture events can happen through human error or hardware failure. Therefore, the probability of puncture events of 6.4E-06 /op is a sum of human error events and hardware failure events. The probability of collision due to human error (H_forklift_punct) of 5.0E-06/op is obtained from the Savannah Rive Site Model.[31] A low value is used because the forklift is used in a consistent and repetitious manner for waste transfers. The forklift transfer in the Underground is a standard operation done under excellent working conditions and a spotter is present. The disposal room floor will be leveled prior to waste operations in the room. Forklift hardware failures (f_hardware) of 1.4E-06/op result from time related mechanisms during operation, but collisions or fuel leaks during the time when the forklift is handling waste could result in releases. The frequency of failures is based on study done at Idaho National Engineering Laboratory (INEL) on forklift equipment failures producing punctures. Also included in the forklift hardware failures is the frequency of leaks in the fuel tanks. The frequency of a tank leak is based on a generic tank and is conservative.[21] The tanks on the forklifts are more reliable because they conform to MSHA requirements. It is conservatively assumed that all puncture events could result in diesel fuel leak.

2. Probability of fire after a forklift collision or leak

The conditional probability of fire, given an Underground forklift accident is 5.0E-04. This is based on the probability for fire, given a bus accident, as reported in Table 38 of WSRC-TR-93-581.[31] The data used in this reference encompasses highway speeds and vehicles with gasoline engines as well as diesel. It is judged that the "Bus" sub-population is more closely aligned with forklifts than trucks, cars, or other/unknown vehicles.

3. Probability that a waste canister is breached, given a fire adjacent to the waste canister

The estimate for this event uses the waste drum fire propagation study results[32] considering four failure modes: 1) breach by metal deformation, 2) internal gas content expansion, 3) decomposition of contents, and 4) contents are volatile. The fire propagation study assigned a likelihood of 0.001 to each of these failure modes. To account for the more energetic burning of an exterior fire, the failure likelihood was increased by a factor of 10 for each failure mode. The likelihood of the individual failure modes sum to yield a total conditional likelihood of 0.04. The waste canister is in a facility cask which provides an additional confinement barrier for waste release as compared to waste drums. Also, the waste canisters are more robust than the waste drums because of their design features. It also assumes that there are no other RH waste canisters or CH waste drums in the path of forklift when RH waste canisters are processed in the Underground.

In order for waste canister breach to occur the above three events have to happen. The frequency of a fire that breaches the waste canister is 6.6E-08/yr (3.3E-03/yr x 5.0E-04 x 4.0E-02). The following evidence, much of which is not explicitly accounted for in the quantification, support this assessment and provide confidence that it is conservative:

- The forklift used to transfer waste canisters from the hoist to the waste rooms in the Underground panels is powered by a diesel engine. It has multiple safety features to reduce the likelihood of fires, such as: (1) fuel tanks segmented into fuel cells, (2) an automatic chemical fire extinguishing system, and (3) electrical parts designed to reduce electric sparks. It is anticipated that any forklift procured to handle waste canisters in the Underground horizon will have similar safety features. These features far exceed those of a typical car, truck, or bus.
- Unloading, transport, and placement of facility casks containing waste canisters on the HERE will be the only operations accomplished with the forklift. These operations are controlled and repeatable. They will be accomplished only by qualified waste handlers, one of which will serve as the forklift operator and another as spotter. As the floor of the active room will be leveled prior to declaring it ready for waste emplacement, the operational conditions will be excellent. The operating philosophy of the plant requires that waste handling be stopped should any abnormal event occur.
- The forklift operations will be done at very slow speeds rather than typical highway speeds. The forklift has 2 speeds, low range at which waste handling operations are performed and high range which is used only when the forklift is not transporting a load.
- No other vehicle movement is allowed in the transport path during RH waste movement or when RH waste is being transported in the Underground.
- Diesel fuel has a high flash point, which makes it difficult to ignite unless the diesel engine operates at higher temperatures to control emissions and the fuel contacts the hot surface of the engine. The data in WSRC-TR-93-581[31] arises from the mix of gasoline and diesel engines.
- The facility cask, waste canister and its contents constitute a considerable thermal sink. In addition, a filtered vent in each 72B waste canister will allow expanding gases within the canister to escape, which will both relieve internal pressure buildup and tend to eliminate oxygen from the interior. Thus, the waste canister will most likely have to be heated to very high temperatures sufficient to induce pyrolysis of the contents to produce a release of hazardous materials that could overwhelm the capacity of the vent filter. It is highly unlikely that the fire can burn long enough for this to occur.

- No credit is taken for the ability of the waste handling team to fight a fire. The forklift will have at least a fire extinguisher aboard, as required by Federal Metal and Nonmetallic Mine Safety and Health Regulations, 30 CFR 57.4260. Personnel will be present who could extinguish the fire even if the operator were injured. As indicated in WSMS-WIPP-99-0002 [33], employees extinguished all five instances of forklift fires at the Savannah River Plant between 1980 and 1995, with little or no resulting damage.

The frequency of hazardous event 10-2 is not calculated because there will be no release of radioactivity from this event as shown by the scoping Thermal Analysis.[33]

Source Term Development - The maximum temperature of the waste canister will be ≤ 500 °F (260 °C) from a potential hydraulic oil fire (event 10-2) as evaluated by scoping Thermal Analysis.[33] The waste canister has a carbon composite filter held in place by AREMCO 503 Ceramabond.[34] The maximum temperature of the Ceramabond is 3000 °F (1649 °C). There will be no appreciable increase in the internal pressure of the waste canister because the filter would stay in place during and after the fire event. <u>There will be no release of radioactivity</u>.

The scoping Thermal Analysis [33] is conservative because:

- The maximum volume of hydraulic oil (40 gals [151.4 L]) available for combustion is the volume analyzed in DOE/WPP-87-005[32].
- The leaked hydraulic oil will form a pool under and around the HERE because there is no catch pan to collect any potential leaks. The leaked hydraulic oil will be absorbed by the salt and there could be a small layer of hydraulic oil on the salt surface. Assuming that there is an ignition source available for hydraulic oil, further spread of flame then depends on heat transfer to the fuel from the hot flame gases, and its movement across the surface is relatively slow[35]. This shows that only a small fraction of the leaked hydraulic oil would burn during a potential fire. Therefore, the heat released from the combustion of leaked hydraulic oil would be significantly less than what is calculated in DOE/WPP-87-005.[32]
- There are no known ignition sources that could ignite hydraulic oil.

Safety Structures, Systems, and Components - Based on the frequency and scoping Thermal analyses for this accident, Safety Class or Safety significant SSCs are not required. The following input data and assumptions are used in the frequency analysis:

- Throughput of waste canisters is 208/year which translates to 208 forklift operations per year.
- There are no other facility casks containing RH waste canisters or CH waste drums in the path of forklift when facility cask containing RH waste canisters are processed in the Underground.
- RH waste canisters are vented.
- A spotter is present when the RH waste canister is transported by the forklift in the Underground.
- Maximum volume of hydraulic oil in the HERE is ≤ 40 gals (151.4L).

The defense-in-depth SSCs which are applicable to this scenario, per the criteria in Chapter 3, Section 3.1.3 are assigned as follows:

- Vented DOT Type A (or equivalent) RH canister - Primary confinement
- Underground Ventilation System - Secondary confinement
- Design of fuel tank on forklift and hydraulic oil reservoir on HERE - Designed to minimize leaks

The defense-in-depth ACs which are applicable to this scenario, per the criteria in Chapter 3, Section 3.1.3 are assigned as follows:

- No other vehicle movement is allowed during RH waste movement in the Underground.

Section 5.2.4.1, Evaluation of the Design Basis, discusses in greater detail: (1) the evaluation of safety SSCs and (2) the applicability of functional and performance requirements (system evaluation) and controls (TSRs). Detailed design descriptions for the above defense-in-depth SSCs may be found in Chapter 4 and the applicable System Design Descriptions.

Source Term Development - A release from event 9-7 is prevented by the following *passive design feature*.

- The W-170 drift leading to the diesel fuel storage area is 14 feet in width. The diesel fuel storage area is over 1000 feet northwest of the waste shaft. The waste handling path to the disposal area runs down the E-140 to the south. The largest bulkhead from the E-140 leading to the W-170 drift is 9 feet in height. The 41 ton Forklift which is used to transport the facility cask is 10 feet 6 inches in height. The design of the bulkhead doors prevent movement of a loaded facility cask to the diesel fuel storage.

In addition to the passive design, multiple administrative controls and active design features are in place to ensure that the quantity of fuel near the facility cask is limited.

- The maximum volume of diesel fuel in the Forklift is $\leq$ 20 gal (75.7 L).
- There is not another facility cask containing a RH waste canister or any CH waste in the path of the forklift transporting a filled facility cask to the disposal room.
- A waste in transit notification system has been installed in the underground to alert personnel when TRU Waste is being transported from the Waste Shaft Collar to the panel area for emplacement. This is a series of amber strobe lights, when they are activated, all personnel in E-140 shall evacuate the drift by going into a crosscut, and remain there until the lights are turned off. However, the amber strobe light notification system **is not** required to be operational as a prerequisite to waste handling activities. The backup notification, if the strobe lights are inoperative, would consist of an announcement by the CMRO, a sweep of the E-140 and S-1950 drifts by the U/G Rover with subsequent verbal notification, and the placement of temporary barriers (bi-folds with signs) in the E-140 drift.

Safety Structures, Systems, and Components - Due to no release from this event, Safety Class or Safety significant SSCs are not required. The following data and assumptions are used in the frequency analysis:

- Throughput of waste canisters is 208/year which translates to 208 forklift operations per year.

- There is not another facility cask containing a RH waste canister or any CH waste in the path of the forklift transporting a filled facility cask to the disposal room.
- 72B waste canisters are vented
- A spotter is present when a RH waste canister is transported by the forklift in the Underground.
- Maximum volume of diesel fuel in the forklift is $\leq$ 20 gal (75.7 L).

The defense-in-depth SSCs which are applicable to this scenario, per the criteria in Chapter 3, Section 3.1.3 are assigned as follows:

- Vented DOT Type A (or equivalent) RH canister - Primary confinement
- Underground Ventilation System - Secondary confinement
- Design of Fuel and Hydraulic Oil Tanks- Designed to minimize leaks

Section 5.2.4.1, Evaluation of the Design Basis, discusses in greater detail: (1) the evaluation of safety SSCs and (2) the applicability of functional and performance requirements (system evaluation) and controls (TSRs). Detailed design descriptions for the above defense-in-depth SSCs may be found in the applicable SDDs as referenced in Chapter 4.

Due to the importance of the WIPP Emergency Management Program,[36] TSR ACs are derived in Chapter 6 and required in the WIPP TSR document.

5.2.3.2 RH2 Fire in the WHB

Scenario Description - The HAZOP[28] postulated a waste canister breach from a fire in the WHB. The HAZOP postulated hazardous event (7-10) that could result in a fire in the WHB. The fire could cause a significant release of radioactivity.

The hazardous event 7-10 postulates a hydraulic oil fire in the Facility Cask Loading Room. The cause of this event is a hydraulic oil leak from the facility cask rotating device. The facility cask rotating device usually has about 40 gals (151.4 L) of hydraulic oil[37]. An ignition source could ignite this fuel and cause a fire. According to the MSDS, the hydraulic oil is slightly flammable (NFPA rating of 1)[30]. The fire could potentially damage the facility cask and waste canister and cause a breach of the waste canister because neither the facility cask or the waste canister are qualified for a fire. The thermal stress on the breached waste canister could cause a significant release of radioactivity. The immediate worker(s) could also receive a significant direct radiological exposure from the breached waste canister.

Preventive and Mitigative Features - General preventive and mitigative measures identified in the HAZOP for this specific scenario are listed in Table 5.1-10.

Estimated Frequency - The HAZOP Team qualitatively estimated the frequency of occurrence of a fire in the WHB to be in the anticipated range ($10^{-1} \geq$ frequency$>10^{-2}$) for the hazardous event 7-10. This frequency is conservative because there are no known ignition sources that could ignite hydraulic oil.

Source Term Development - The maximum temperature of the waste canister will be ≤500 °F (260 °C) from a potential hydraulic oil fire (event 7-10) as evaluated by the scoping Thermal Analysis.[33] The waste canister has a carbon composite filter held in place by AREMCO 503 Ceramabond.[34] The maximum temperature of the Ceramabond is 3000 °F (1649 °C). There will be no appreciable increase in the internal pressure of the waste canister because the filter would stay in place during and after the fire event. There will be no release of radioactivity.

Safety Structures, Systems, and Components - Based on the lack of release of radioactivity as supported by the scoping Thermal Analysis,[33] Safety Class or Safety significant SSCs are not required. The following data and assumptions are used in the thermal analysis:

- Design and Location (>6 ft [1.8 m]) from the catch pans provided for the hydraulic unit of facility cask rotating device) of the facility cask transfer car
- Maximum volume of hydraulic oil in the facility cask rotating device is ≤ 40 gal (151.4 L).
- Capacity of the catch pans in the facility cask rotating device is > 45 gals (170.3 L).

The defense-in-depth SSCs which are applicable to this scenario, per the criteria in Chapter 3, Section 3.1.3 are assigned as follows:

- Vented DOT Type A (or equivalent) RH Canister - Primary confinement
- WHB Structure - Secondary confinement
- WHB RH HVAC System - Secondary confinement
- WHB HEPA Filters - Secondary confinement
- Design of Hydraulic Oil Reservoir - Designed to minimize leaks

Section 5.2.4.1, Evaluation of the Design Basis, discusses in greater detail: (1) the evaluation of safety SSCs and (2) the applicability of functional and performance requirements (system evaluation) and controls (TSRs). Detailed design descriptions for the above defense-in-depth SSCs may be found in Chapter 4 and the applicable SDDs.

Due to the importance of the WIPP Emergency Management Program,[36] TSR ACs are derived in Chapter 6 and required in the WIPP TSR document.

5.2.3.3 RH3 Loss of Confinement in the WHB

Scenario Description - The HAZOP[28] postulated a LOC of the waste material in the WHB. The HAZOP postulated three hazardous events (7-1, 7-2, and 7-6) that could result in a LOC of the waste material in the WHB. The LOC events could cause a significant release of radioactivity.

Hazardous event 7-1 postulates a movement of shuttle car while grapple hoist is lifting the waste canister. The causes of this event are mechanical failure or control loop failure during lifting of the waste canister. The potential consequences of this event are: breach of a waste canister, damage to shuttle car, spread of contamination, direct radiological exposure, radiological impact offsite, and worker fatality. The potential breach of a waste canister could cause a significant release of radioactivity to the environment.

Hazardous event 7-2 postulates a drop of waste canister while being lifted into the facility cask. The dropped canister either falls into the 72B cask or onto the Transfer Cell floor. The causes of this event are human error, equipment failure-hoist or grapple, or control loop failure during lifting of the waste canister. The potential consequences of this event are: breach of a waste canister, significant damage to the facility, spread of contamination, significant process downtime for recovery, and radiological impact offsite. The potential breach of a waste canister could cause a significant release of radioactivity to the environment.

Hazardous event 7-6 postulates a closure of shield valve on waste canister (sooner than desired) while it is being lifted into the facility cask. The cause of this event is control loop failure during lifting of the waste canister. The potential consequences of this event are: breach of a waste canister, damage to shuttle car, spread of contamination, direct radiological exposure, and radiological impact offsite. The potential breach of a waste canister could cause a significant release of radioactivity to the environment.

Preventive and Mitigative Features - General preventive and mitigative measures identified in the HAZOP for this specific scenario are listed in Table 5.1-10. For the no mitigation case, the HEPA filters are assumed to be bypassed or not in place. For the mitigated case, credit is taken for the permanently installed continuously on-line two-stage HEPA.

Estimated Frequency - The HAZOP Team qualitatively estimated the frequency of LOC in the WHB to be in the anticipated range ($10^{-1} \geq$ frequency $>10^{-2}$) for all the hazardous events.

Hazardous event 7-1, movement of shuttle while 6.25-ton grapple hoist is lifting waste canister, is prevented by the following passive design features:

- Hardwired interlock between the shuttle car and the shield valve that allows either the shuttle car or the shield valve to be powered.

Additionally, failure of the active engineered features were quantified in PLG-1317, Waste Isolation Pilot Plant 6.25 Grapple Hoist Fault Tree Analysis,[38] and the frequency of the shuttle car moving while a lift is occurring was calculated to be 3.30E-12 events/lift which makes this event beyond extremely unlikely (10^{-6}/yr $\geq$ frequency).

Hazardous event 7-6, closure of shield valve on waste canister, is prevented by the following *passive design feature:*

- Design of motor on the shield valve will prevent this event.

The calculated frequency of the shield valve crushing the canister from PLG-1317[38] is 2.0E-13 events/lift, therefore, this event is also beyond extremely unlikely (10^{-6}/yr $\geq$ frequency). This accident scenario is evaluated even though <u>no release</u> is postulated because it is prevented by active design features.

Results from the event tree analysis described below are documented in Appendix D (Table D-3), the overall frequency of hazardous event 7-2, drop of waste canister while being lifted into the facility cask in the WHB, is in the beyond extremely unlikely range (10^{-6}/yr $\geq$ frequency).

An event tree analysis has been developed to show the frequency of a failure of the grapple hoist per year.(Appendix D, Table D-3) The frequency of a grapple hoist failure resulting in a breach of the canister was calculated in PLG-1317[38] fault tree analysis.

The fault tree analysis includes the hoist operation of the canister and the primary focus of the analysis was to illustrate the failure mechanisms for the breach of the 72B waste canister during facility cask loading operation in the Facility Cask Loading Room. The prime question in developing this fault tree was what could go wrong during the grapple hoist operation that could lead to waste canister damage and subsequent release of the waste canister contents to the environment. The subsequent question was given these failure mechanisms occur, what would be the likelihood of RH canister breached. In order to develop this fault tree, design information and related documents were gathered, and interviews with the engineering staff were conducted.

The WIPP facility has an aggressive crane test, maintenance, and inspection program which applies to the grapple hoist used to load waste canisters into the facility cask. Some elements of that program are: (1) preoperational checks and inspections of the grapple, wire ropes, lifting, and balancing assembly; (2) no-load test once per shift; (3) monthly inspection of the grapple and wire rope; and (4) yearly nondestructive testing of the hook and wire rope. These provisions provide assurance that the analysis failure rate is very conservative estimate of the frequency of the initiating event for hazardous event 7-2.

The grapple hoist brake system is designed to engage upon loss of power, and as such, hold the load, thus minimizing the probability of waste canister breach.

Based on the results of the event tree analysis, it may be concluded that the frequency of hazard events during use of the grapple hoist system is extremely low. The assessment could not identify improvements to the grapple hoist and the operations associated with it that would significantly lower this frequency.

Source Term Development - The following are two different scenarios that could occur during the lifting of waste canister from the 72B cask in the Transfer Cell into the facility cask in the Facility Cask Loading Room.

- The waste canister is held by the grapple hoist in the Facility Cask Loading Room and the Transfer Cell ceiling shield valve is closed. The waste canister could be dropped by the hoist and could fall on the shield valve.
- The waste canister is lifted from the 72B cask in the Transfer Cell and the Transfer Cell ceiling shield valve is open. The waste canister could be dropped by the hoist and could fall into the 72B cask. There will be no failure of the shuttle car because it is designed to support the drop of waste canister from facility cask into the 72B cask.[39]

In the first scenario, the bottom of the waste canister is $\leq$ 4 ft (1.2 m) from the top of the Transfer Cell ceiling shield valve. The waste canister is designed to maintain the containment integrity of waste material in it if it is dropped from $\leq$ 4 ft (1.2 m). Therefore, there will be no release of waste material from the first scenario.

In the second scenario, the bottom of the waste canister is $\leq$ 22 ft (6.7 m) from the bottom of the 72B cask in the Transfer Cell. A drop of the waste canister from the maximum height of 22 ft (6.7 m) could potentially compromise the confinement integrity of the waste material in it. Therefore, there is a possibility of waste material release from the second scenario.

Radiological Waste Canister Inventory (CI) - Based on the postulated scenario, the CI for this accident has been determined to be the inventory contained in one waste canister. As discussed in Section 5.2.1.1, it is assumed that the waste canister contains the maximum radionuclide inventory of 80 PE-Ci for direct loaded waste and 240 PE-Ci for double contained waste. The waste canister is conservatively assumed to contain 95 percent noncombustible and five percent combustible material as discussed in Section 5.2.1.1.

Non-radiological Waste Canister Inventory (CI) - As discussed in Section 5.2.1.1, the non-radiological CI development process for events which involve a breach of a waste canister is simplified by assuming that 100 percent of the VOC headspace inventory is released instantaneously. VOCs selected for consideration for accidental releases are listed in Table 5.1-2. The weighted average of VOCs in the RH waste is assumed to be the same as in CH waste. The mass of VOC is based on the moles of gas present in the RH waste canister. A void space of 70 percent, same as in CH waste drums, is used for calculating moles of gas present in the 72B waste canister.

Damage Ratio - As discussed in Section 5.2.1.1, for drops of waste canisters from the height associated with crane failure, from heights greater than 4 ft (1.2 m), and equal to or less than 22 ft (6.7 m) (4 ft [1.2 m]$< h \leq$ 22 ft [6.7 m]), are evaluated. Based on the analysis, it is conservatively assumed, to encompass the uncertainty in the application of test data and the variation in waste forms, that the DR for Type A (or equivalent) canisters in this class of accident is 1.0 (DR=1.0) for direct loaded waste and 0.1 (DR=0.1) for double confined waste.

Airborne Release Fraction and Respirable Fraction - As discussed in Section 5.2.1.1, the ARF for contaminated combustible materials which are subjected to impact and breach of the waste canister is 0.001. This value represents a bounding ARF for packaged material in a canister which fails due to impact (DOE-HDBK-3010-94, subsection 5.2.3.2).[4] The bounding RF is 0.1 (DOE-HDBK-3010-94, subsection 5.2.3.2).[4]

The ARF for contaminated noncombustible materials which are subjected to impact and breach of the waste canister for solids that do not undergo brittle fracture is 0.001. This value represents a bounding ARF for packaged material in a canister which fails due to impact (DOE-HDBK-3010-94, subsection 5.3.3.2.2).[4] The bounding RF is 1.0 (DOE-HDBK-3010-94, subsection 5.2.3.2).[4]

Leakpath Factor - Based on the scenario description, it is not expected that the grapple hoist failure in the WHB will also disable the WHB ventilation or HEPA filtration systems. If a grapple hoist failure results in a release to the WHB, the release to the outside environment is mitigated by the permanently installed continuously on-line two-stage HEPA. Although the ventilation system is required to be operational during waste handling operations, active ventilation is not required to prevent a significant release of hazardous materials from the WHB. The intact HEPA filters will maintain the secondary confinement barrier, with a potential for only minor releases via leakage around access shield valves, etc. resulting from the loss of differential pressure.

The amount of material removed from the air due to the HEPA filters is predicted based on decontamination factors (DF). DF have been predicted for accident conditions in ERDA 76-21.[14] Based on the handbook, the total DF used in this analysis for both stages of filtration is 1.0E+06. The LPF is 1.0E-06 for the mitigated case and 1.0 for the unmitigated case.

Estimated noninvolved worker and MEI Consequences and Comparison to Risk Evaluation Guidelines - The accident risk evaluation guidelines for the extremely unlikely range are used for the comparison of the unmitigated noninvolved worker and MEI consequences.

Based on the values for the source term variables, the worst-case, unmitigated MEI and noninvolved worker consequences (Appendix E, Tables E-1, E-2, and E-3) of the LOC in the WHB (RH3) are well within the radiological and non-radiological risk evaluation guidelines for the extremely unlikely range.

Assessment of Immediate Worker Consequences- No immediate worker consequences are calculated for this accident. There are no workers in the Transfer Cell where the release occurs because the operation is done remotely.

Safety Structures, Systems, and Components - Based on the estimated worst-case unmitigated MEI and noninvolved worker consequences and comparison to the risk evaluation guidelines, Safety Class or Safety significant SSCs are not required. The following input data and assumptions are used in the accident analysis:

- Shuttle car is designed to support the drop of waste canister from facility cask into the 72B cask.[39]
- Throughput of waste canisters is 208/year.
- It is assumed that the facility cask loading grapple hoist is as reliable or better than the TRUPACT Crane System.
- Grapple hoist brake system is designed to engage upon loss of power, and as such, hold the load, thus minimizing the probability of waste canister breach.
- The maximum height from which the waste canister could be dropped is $\leq$ 22 ft (6.7 m).
- Should an accident involving a breach of a waste canister occur, the plant design permits the immediate cessation of activity and isolation of the area where the breach occurs. Once isolation is achieved, there is no driving force within the waste or waste handling area that could result in a further release of the waste material.
- Distance of the grapple hoist operator from the dropped waste canister is 15 ft (4.5 m).

The defense-in-depth SSCs which are applicable to this scenario, per the criteria in Chapter 3, Section 3.1.3 are assigned as follows:

- Vented DOT Type A (or equivalent) RH canister - Primary confinement
- WHB structure - Secondary confinement
- WHB RH HVAC system - Secondary confinement
- WHB HEPA filters - Secondary confinement
- Grapple Hoist - Designed to minimize failure resulting in a dropped load
- Design of 72B cask- Prevents/minimizes releases from the waste canister
- Design of waste canister - Prevents/minimizes releases of waste material

Section 5.2.4.1 discusses in greater detail: (1) the evaluation of safety SSCs, and (2) the applicability of functional and performance requirements (system evaluation) and controls (TSRs). Detailed design descriptions for the above defense-in-depth SSCs may be found in the applicable SDDs as referenced in Chapter 4.

Due to the importance of WIPP programs relating to configuration and document control, quality assurance, conduct of operations, preventative maintenance and inspection, waste handling procedures and training, the WIPP RH WAC, and the WIPP Emergency Management Program[36] and associated procedures, in the WIPP defense-in-depth strategy for this accident, TSR ACs are derived in Chapter 6 and required in the WIPP TSR Document.

5.2.3.4 RH4-A Loss of Confinement in the Underground (Waste Hoist Failure)

Scenario Description - The HAZOP[28] postulated a LOC of the waste canister in the waste hoist (RH4-A). The HAZOP[28] postulated two hazardous waste hoist events (8-4 and 8-6) that could result in a LOC of the waste material in the Underground. The LOC event could cause a significant release of radioactivity.

Hazardous event 8-4 postulates a drop of the facility cask into the shaft because of incorrect waste hoist position. The cause of this event is human error. The potential consequences of this event are : breach of a waste canister, major damage to shaft, significant radiological exposure to personnel, major release of radioactive materials, considerable impact offsite, and worker fatality. The potential breach of a waste canister could cause a significant release of radioactivity to the environment.

Hazardous event 8-6 postulates a drop of waste hoist to the bottom of the shaft during transfer of RH waste canister to the Underground. The cause of this event is equipment failure-brake system. The potential consequences of this event are: breach of a waste canister, major damage to shaft, significant radiological exposure to personnel, major release of radioactive materials, considerable impact offsite, and worker fatality. The potential breach of a waste canister could cause a significant release of radioactivity to the environment.

Preventive and Mitigative Features - General preventive and mitigative measures were identified in the HAZOP for this specific scenario and are listed in Table 5.1-10. For the no-mitigation case, automatic or manual shift of the underground ventilation system to HEPA filtration is assumed to not respond to mitigate a release for this scenario.

Estimated Frequency - The HAZOP Team qualitatively estimated the frequency of LOC in the Underground to be in the anticipated range ($10^{-1} \geq$ frequency $>10^{-2}$) for all the hazardous events.

The frequency of hazardous event 8-4 is not calculated because this event is prevented by passive design features[41].

- Design of the facility cask transfer car, facility cask, and waste hoist and shaft
- The facility cask is in a horizontal position and positioned with the greatest moment of inertia. It is held in place by trunions and supports to keep it from moving.
- Maximum speed of the facility cask transfer car is 30 ft (9.1 m) per minute.

Based on a quantitative evaluation using conservative assumptions documented in Appendix D (Figure D-2), the no mitigation annual occurrence frequency of the hazardous scenario 8-6, Drop of waste hoist to the bottom of the shaft, is beyond extremely unlikely. Risk evaluation guidelines are not identified for events with a frequency equal to or less than 10^{-6}/yr.

As shown in the event tree for this scenario, loss of power to the waste hoist motor is assumed to be the initiating event. WTSD-TME-063, Probability of a Catastrophic Hoist Accident at the Waste Isolation Pilot Plant,[42] identifies four dominant hoist accident scenarios, the most likely is power loss. Power

failure may be due to loss of off-site power or coincident with the Design Basis Tornado (DBT) or earthquake (DBE). An evaluation of the off-site power loss frequency is conducted in Table D-3 of Appendix D. Comparing the frequency of the DBE (RH6) and DBT with the frequency of off-site power loss indicates that the most likely scenario is loss of off-site power.

Regardless of the initiating event, the hoist brake system functions to prevent the uncontrolled movement of the hoist, and prevents the resultant waste canister breach accident scenario. Due to the importance of this system, a fault tree analysis[42] on the waste hoist brake system was conducted: (1) to quantify the failure frequency on demand, (2) to verify system reliability, and (3) to identify system improvements or controls. The fault tree analysis of the current hoist configuration quantifies the frequency of failure as 1.3E-07/demand.

The no-mitigation frequency for the waste material release from the failure of the waste hoist is 9.05E-10/yr as shown in Figure D-2 of Appendix D.

An analysis of the frequency of hoist brake system failure has been performed by the Environmental Evaluation Group (EEG)[43]. The extensive uncertainty analysis performed in EEG-59, indicates that the mean frequency of 1.3E-07 corresponds to an 82 percent confidence level. At the 95 percent confidence level, the analysis indicates that the annual failure rate is 4.5E-07. The mean value of 1.3E-07 is used in the event tree in Figure D-2 for the failure probability of the brake system. The EEG analysis confirms, that the no-mitigation accident scenario frequency is beyond extremely unlikely (10^{-6}/yr $\geq$ frequency).

The input data and assumptions used for determining the failure probability of the brake system of the waste hoist are:

- Maintain configuration of the waste hoist on which fault tree was based (for details see WIPP/WID-96 -2178[40]).
- Maintenance program including post-maintenance functional testing - stroke testing is assumed for all valves following a maintenance operation
- Sensors and related components are regularly tested and calibrated. No attempt was made in this analysis to evaluate the possible consequences of faulty signals due to the miscalibration of the sensors
- Mission time for waste hoist is 1000 hours/yr (i.e, 7,000 round trips per yr) which includes transfer of RH and CH waste to the Underground
- Maximum test time for standby components is 24 hours
- Waste hoist is operated in automatic mode only when transferring RH waste because manual mode is not modeled in the fault tree analysis
- Assumed that neither inadvertent braking nor speed decrease would cause any safety concerns
- Assumed that neither inadvertent movement or speed increase would result in conditions beyond the design capabilities of the detection and protective features of the brake system
- Waste hoist system is subjected to a series of thorough "pre-operational check" test at the start of each eight hour shift. Operation of the waste hoist system does not begin until the tests are successfully completed. In the fault tree analysis this test interval is conservatively assumed to be three times greater or 24 hours.

- If the hoist system is to be operated more than one shift per day, or there is a change of operator, the hoist system will be removed from service and the same "pre-operational check" test will be performed.
- Based on the service life verification tests, the failure of the brake caliper unit is not considered
- Assumed that the system is structurally designed for thermal stresses/shocks
- Assumed that the ambient temperature is not below the freezing point of water

Source Term Development - No source term is developed for event 8-4 because this event is prevented by passive design features.

Event 8-6 postulates a drop of waste hoist to the bottom of the shaft during transfer of the RH waste canister to the Underground. This scenario could result in compromising the containment integrity of the waste canister and the facility cask.

Radiological Waste Canister Inventory (CI) - Based on the postulated scenario, the CI for this accident has been determined to be the inventory contained in one waste canister. As discussed in Section 5.2.1.1, it is assumed that the 72B waste canister contains the maximum radionuclide inventory of 80 PE-Ci for direct loaded waste and 240 PE-Ci for double contained waste. The waste canister is conservatively assumed to contain 95 percent noncombustible and five percent combustible material as discussed in Section 5.2.1.1.

Non-radiological Waste Canister Inventory (CI) - As discussed in Section 5.2.1.1, the non-radiological CI development process for events which involve a breach of a waste canister is simplified by assuming that 100 percent of the VOC headspace inventory is released instantaneously. VOCs selected for consideration for accidental releases are listed in Table 5.1-2. The weighted average of VOCs in the RH waste is assumed to be the same as in CH waste. The mass of VOC is based on the moles of gas present in the RH waste canister. A void space of 70 percent, same as in CH waste drums, is used for calculating moles of gas present in the RH waste canister.

Damage Ratio - It is assumed that the RH waste is directly loaded into the RH canister, and the canister is being transported to the underground within the facility cask when the accident occurs. As a result of the accident, the canister and facility cask will be most likely moderately damaged. The bounding damage ratio for a 55-gallon drum involved in the CH waste hoist accident is 0.25 from DOE/WIPP-95-2065, WIPP Contact Handled (CH) Waste Safety Analysis Report.[6] When comparing the structural integrity of the RH canister to that of the CH drum, the RH canister is more robust, therefore a DR of 0.25 is conservatively assigned for this RH accident scenario.

DOE/WIPP-95-2065[6] "overpack" scenarios assume that 55-gal drums are overpacked within a standard waste box (SWB). The product of the damage ratios for the 55-gal drum overpacked within a SWB, and the SWB, is the overall DR for the "overpack" involved in drop scenarios. This method is also applied to a 55-gal drum within an RH canister.

The RH canister will hold three 55-gal drums each containing RH waste. However, for conservatism it is assumed that all the waste is in the bottom drum, and that drum is impacted by the accident conditions and releases 10 percent of its contents. Therefore, assuming a conservative DR of 0.1 for drums within the RH canister, a conservative RH-canister overpack DR would be 0.1 x 0.25 = 0.025 for the Hoist Drop scenario.

Airborne Release Fraction and Respirable Fraction - As discussed in Section 5.2.1.1, the ARF for contaminated combustible materials which are subjected to impact and breach of the waste canister is 0.001. This value represents a bounding ARF for packaged material in a canister which fails due to impact (DOE-HDBK-3010-94, subsection 5.2.3.2).[4] The bounding RF is 0.1 (DOE-HDBK-3010-94, subsection 5.2.3.2).[4]

The ARF for contaminated noncombustible materials which are subjected to impact and breach of the waste canister for solids that do not undergo brittle fracture is 0.001. This value represents a bounding ARF for packaged material in a canister which fails due to impact (DOE-HDBK-3010-94, subsection 5.3.3.2.2).[4] The bounding RF is 1.0 (DOE-HDBK-3010-94, subsection 5.2.3.2).[4]

Leakpath Factor - Due to the accident scenario conditions and potential damage to both the RH canister and the facility cask, a conservative LPF from the facility cask to the underground of 1.0 is assigned.

The amount of material removed from the air due to the HEPA filters is predicted based on DF. DF have been predicted for accident conditions in the handbook ERDA 76-21.[14] Based ERDA 76-21, the total DF used in this analysis for both stages of filtration is 1.0E+06. The LPF is 1.0E-06 for the mitigated case and 1.0 for the unmitigated case.

Estimated noninvolved worker and MEI Consequences and Comparison to Risk Evaluation Guidelines - Based on the values for the source term variables as presented above, the worst-case, unmitigated MEI and noninvolved worker consequences (see Appendix E, Tables E-4, E-5, and E-6) of the LOC in the Underground (Waste Hoist Drop) (RH4-A) are well within the radiological and non-radiological risk evaluation guidelines for the extremely unlikely range.

Assessment of Immediate Worker Consequences- No current risk evaluation guidelines exist for the assessment of accident consequences to immediate workers. Therefore, in the absence of guidelines, and for conservatism, the noninvolved worker radiological guidelines for the extremely unlikely range are used as a reference point for the assessment of consequences to immediate workers and the evaluation of the adequacy of the WIPP defense-in-depth features. The worst-case consequences to the immediate worker from RH4A (Tables E-13 and E-16) exceed the risk evaluation guidelines. However, no specific additional worker protection engineering or administrative controls beyond those already qualitatively identified as providing defense-in-depth for the immediate worker, are needed based on the discussion provided in Section 5.2.4.2.

Safety Structures, Systems, and Components - The brake system on the waste hoist has been designated as Safety Significant. The following input data and assumptions are used in the accident analysis:

- Design of the facility cask transfer car, facility cask, and waste hoist and shaft
- The facility cask is in a horizontal position and positioned with the greatest moment of inertia. It is held in place by trunions and supports to keep it from moving.
- Maximum speed of the facility cask transfer car is 30 ft (9.1 m) per minute
- Maintain configuration of the waste hoist on which fault tree was based (for details see WIPP/WID-96 -2178[40])
- Maintenance program including post-maintenance functional testing- stroke testing is assumed for all valves following a maintenance operation

- Mission time for waste hoist is 1000 hours/yr (i.e, 7,000 round trips per yr) which includes transfers of RH and CH waste to the Underground
- Maximum test time for standby components is 24 hours
- Waste hoist is operated in automatic mode only when transferring RH waste because manual mode is not modeled in the fault tree analysis
- Waste hoist system is subjected to a series of thorough "pre-operational check" test at the start of each eight hour shift. Operation of the waste hoist system does not begin until the tests are successfully completed. In the fault tree analysis this test interval is conservatively assumed to be three times greater or 24 hours.
- If the hoist system is to be operated more than one shift per day, or there is a change of operator, the hoist system will be removed from service and the same "pre-operational check" test will be performed

The defense-in-depth SSCs which are applicable to this scenario, per the criteria provided in Chapter 3, Section 3.1.3 are assigned as follows:

- Vented DOT Type A (or equivalent) waste canister - Primary confinement
- Underground Ventilation Exhaust System - Secondary confinement
- Radiation Monitoring System (active waste disposal room exit alpha CAM for underground shift to filtration) - Secondary confinement
- Underground Ventilation Exhaust HEPA Filters - Secondary confinement
- Central Monitoring System (for actuation of underground shift to filtration only) - Secondary confinement
- Design of facility cask - Prevents/minimizes releases from the waste canister

The defense-in-depth ACs which are applicable to this scenario, per the criteria in Chapter 3, Section 3.1.3 are assigned as follows:

- The door to the waste hoist is not opened until the conveyance is locked in position and the pivot rails are in place - Prevents the drop of the facility cask into the shaft

Section 5.2.4.1, Evaluation of the Design Basis, discusses in greater detail: (1) the evaluation of safety SSCs, and (2) the applicability of functional and performance requirements (system evaluation) and controls (TSRs). Detailed design descriptions for the above defense-in-depth SSCs may be found in Chapter 4 and the applicable SDDs.

Due to the importance of WIPP programs relating to configuration and document control, quality assurance, conduct of operations, preventative maintenance and inspection, waste handling procedures and training, the WIPP RH WAC, and the WIPP Emergency Management Program[36] and associated procedures, in the WIPP defense-in-depth strategy for this accident, TSR ACs are derived in Chapter 6 and required in the WIPP TSR Document.

5.2.3.5 RH4-B Loss of Confinement in the Underground (Waste Movement)

Scenario Description - The HAZOP[28] postulated a LOC of the waste material in the Underground. The HAZOP[28] postulated four hazardous waste movement events (9-5, 10-1, 10-5, and 10-6) that could result in a LOC of the waste material in the Underground. The LOC event could cause a significant release of radioactivity.

Hazardous event 9-5 postulates a drop of the facility cask by a forklift during transfer of facility cask in the Underground. The cause of this event is human error, forklift collision, equipment failure forklift hydraulic system, or structural failure of fork tines. The potential consequences of this event are: breach of a waste canister, significant radiological exposure to personnel, major release of radioactive materials, considerable impact offsite, and worker fatality. The potential breach of a waste canister could cause a significant release of radioactivity to the environment.

Hazardous event 10-1 postulates a loss of control where the forklift drops the facility cask onto the HERE. The cause of this event is human error, or equipment failure. The potential consequences of this event are: breach of a waste canister, major damage to the HERE, significant radiological exposure to personnel, major release of radioactive materials, and considerable impact offsite. The potential breach of a waste canister could cause a significant release of radioactivity to the environment.

Hazardous event 10-5 postulates a closure of a facility cask shield valve on a waste canister (mispositioned shield valve or movement sooner than desired) while it is being emplaced. The causes of this event are control loop failure and mechanical failure on the emplacement equipment. The potential consequences of this event are: damage or breach of a waste canister, release of radioactive material, direct radiological exposure, and adverse impact offsite. The potential breach of a waste canister could cause a significant release of radioactivity to the environment.

Hazardous event 10-6 postulates misalignment of waste canister as it is moved into the borehole. The causes of this event are: human error and equipment failure - HERE settles and results in misalignment or level indicator malfunctions. The potential consequences of this event are: damage or breach of a waste canister, damage to HERE, release of radioactive material, direct radiological exposure, and adverse impact offsite. The potential breach of a waste canister could cause a significant release of radioactivity to the environment.

Preventive and Mitigative Features - General preventive and mitigative measures identified in the HAZOP for this specific scenario are listed in Table 5.1-10. For the no mitigation case, automatic or manual shift of the underground ventilation system to HEPA filteration is assumed to not respond to mitigate a release for this scenario.

Estimated Frequency - The HAZOP Team qualitatively estimated the frequency of LOC in the Underground to be in the anticipated range ($10^{-1} \geq$ frequency $>10^{-2}$) for all the hazardous events.

The hazardous event 10-5, closure of shield valve on waste canister, is prevented by the following passive design feature:

- Design of the shield valve motor (torque limiter) is such that an inadvertent closure of shield valve will not affect the containment integrity of the waste canister during its emplacement in the borehole

Hazardous event 10-6, misalignment of waste canister as it is moved into the borehole, is prevented by the following passive design feature:

- Design of hydraulic system will be such that the containment integrity of a misaligned waste canister is not affected during its emplacement in the borehole

The frequency of hazardous events 10-5, and 10-6 is not calculated because these events are prevented by the passive design features.

Both hazardous scenarios, 9-5, drop of the facility cask by a forklift, and 10-1, loss of control causes a drop of the facility cask onto the HERE, are evaluated in a single event tree. As shown in the event tree analysis for these scenarios in Appendix D, Table D-4, the quantitative evaluation gave an annual occurrence frequency in the unlikely range (10^{-4}/yr < frequency $\leq 10^{-2}$/yr) for the case with no-mitigation. The event tree assumes the following:

- Throughput of waste canisters is 208/year which translates to 208 forklift operations per year.
- The Underground panel room floor will be leveled prior to storage operations
- A spotter is present whenever forklift is used to transfer waste canister in the Underground
- Maximum time to transfer one waste canister to the HERE equipment in the Underground is approximately 4 hours

Source Term Development - The following are two different scenarios that could occur during the transfer of waste canister by a forklift in the Underground.

- Drop of the facility cask by a forklift in the Underground (event 9-5) and
- Loss of control causes a drop of the facility cask onto the HERE (event 10-1)

Both these drop scenarios could result in compromising the containment integrity of the waste canister because the bottom of the facility cask is >4 ft (1.2 m) from the floor of the Underground.

Radiological Waste Canister Inventory (CI) - Based on the postulated scenario, the CI for this accident has been determined to be the inventory contained in one waste canister. It is assumed that the waste canister contains the maximum radionuclide inventory of 80 PE-Ci (direct loaded) and 240 PE-Ci (double confined). The waste canister is conservatively assumed to contain 95 percent noncombustible and five percent combustible material as discussed in Section 5.2.1.1.

Non-radiological Waste Canister Inventory (CI) - The non-radiological CI development process for events which involve a breach of a waste canister is simplified by assuming that 100 percent of the VOC headspace inventory is released instantaneously. VOCs selected for consideration for accidental releases are listed in Table 5.1-2. The weighted average of VOCs in the RH waste is assumed to be the same as in CH waste. The mass of VOCs is based on the moles of gas present in the RH waste canister. A void space of 70 percent, same as in CH waste drums, is used for calculating moles of gas present in the RH waste canister.

Damage Ratio - As discussed in Section 5.2.1.1, for drops of waste canisters from heights > 4 ft, and $\leq$ 22 ft (6.7 m) (4 ft [1.2 m]<h $\leq$ 22 ft [6.7 m]), it is conservatively assumed that the DR for facility cask containing a Type A (or equivalent) waste canister in this type of accident is 0.01 (DR=0.01) for direct loaded waste and 0.001 (DR =0.001) for double confined waste.

Airborne Release Fraction and Respirable Fraction - As discussed in Section 5.2.1.1, the ARF for contaminated combustible materials which are subjected to impact and breach of the waste canister is 0.001. This value represents a bounding ARF for packaged material in a canister which fails due to impact (DOE-HDBK-3010-94, subsection 5.2.3.2).[5] The bounding RF is 0.1 (DOE-HDBK-3010-94, subsection 5.2.3.2).[4]

The ARF for contaminated noncombustible materials which are subjected to impact and breach of the waste canister for solids that do not undergo brittle fracture is 0.001. This value represents a bounding ARF for packaged material in a canister which fails due to impact (DOE-HDBK-3010-94, subsection 5.3.3.2.2).[4] The bounding RF is 1.0 (DOE-HDBK-3010-94, subsection 5.2.3.2).[4]

Leakpath Factor - Based on the scenario description, it is not expected that a waste canister drop in the Underground will also disable the underground ventilation or HEPA filtration systems. Shift of the underground ventilation system may occur manually or automatically as discussed in detail in Section 4.4.2.3. However, it is assumed that an automatic shift to filtration will not respond to mitigate a release for this scenario. For the mitigated case, it is assumed that the CMR operator will be notified or be aware of the accident and actuate the shift to filtration. Credit is <u>not</u> taken for the natural attenuation provided by the discharge path.

Estimated non-involved worker and MEI Consequences and Comparison to Risk Evaluation Guidelines- Based on the values for the source term variables as presented above, the worst-case, no-mitigation MEI and noninvolved worker consequences (see Appendix E, Tables E-7, E-8, and E-9) of the LOC in the Underground (RH4-B) are well within the radiological and non-radiological risk evaluation guidelines for the extremely unlikely range.

Assessment of Immediate Worker Consequences- No current risk evaluation guidelines exist for the assessment of <u>accident</u> consequences to immediate workers. Therefore, in the absence of guidelines, and for conservatism, the noninvolved worker radiological guidelines are used as a reference point for the assessment of consequences to immediate workers and the evaluation of the adequacy of the WIPP defense-in-depth features. The worst-case consequences to the immediate worker from RH4-B (Table E-14 and E-17) are well within the risk evaluation guidelines. Therefore, no specific additional worker protection engineering or administrative controls beyond those already qualitatively identified as providing defense-in-depth for the immediate worker, are needed based on the quantitative consequence assessment results.

Safety Structures, Systems, and Components - Based on the estimated worst-case no-mitigation MEI and noninvolved worker consequences and comparison to the risk evaluation guidelines, Safety Class or Safety significant SSCs are not required. The following input data and assumptions are used in the accident analysis:

- Design of motor on the shield valve will be such that an inadvertent closure of shield valve will not affect the containment integrity of the waste canister during its emplacement in the borehole
- Design of hydraulic system will be such that the containment integrity of a misaligned waste canister is not affected during its emplacement in the borehole
- Throughput of waste canisters is 208/year which translates to 208 forklift operations per year.
- Underground panel room floor will be leveled prior to storage operations
- A spotter is present whenever forklift is used to transfer waste canister in the Underground

- Maximum time to transfer one waste canister to the emplacement equipment in the Underground is approximately 4 hours

The defense-in-depth SSCs which are applicable to this scenario, per the criteria in Chapter 3, Section 3.1.3 are assigned as follows:

- Vented DOT Type A (or equivalent) waste canister - primary confinement
- Underground Ventilation Exhaust System - secondary confinement
- Radiation Monitoring System (active waste disposal room exit alpha CAM for underground shift to filtration) - secondary confinement
- Underground Ventilation Exhaust HEPA Filters - secondary confinement
- Central Monitoring System (for actuation of underground shift to filtration only) - secondary confinement
- Forklift and Attachments - Designed to minimize waste canister drops
- Design of facility cask - Prevents/minimizes releases from the waste canister

The defense-in-depth ACs which are applicable to this scenario, per the criteria in Chapter 3, Section 3.1.3 are assigned as follows:

- No other vehicle movement is allowed during RH waste movement in the Underground.

Section 5.2.4.1, Evaluation of the Design Basis, discusses in greater detail: (1) the evaluation of safety SSCs, and (2) the applicability of functional and performance requirements (system evaluation) and controls (TSRs). Detailed design descriptions for the above defense-in-depth SSCs may be found in the applicable SDDs as referenced in Chapter 4.

Due to the importance of WIPP programs relating to configuration and document control, quality assurance, conduct of operations, preventative maintenance and inspection, waste handling procedures and training, the WIPP RH WAC, and the WIPP Emergency Management Program[36] and associated procedures, in the WIPP defense-in-depth strategy for this accident, TSR ACs are derived in Chapter 6 and required in the WIPP TSR Document.

5.2.3.6 RH5 Fire Followed by Explosion in the Underground

Scenario Description - The HAZOP[28] postulated a fire followed by explosion in the Underground. The HAZOP[28] postulated two hazardous events (9-8 and 10-3) that could result in a fire followed by explosion in the Underground. The fire and subsequent explosion could cause a significant release of radioactivity.

Hazardous event 9-8 postulated a diesel fuel fire followed by explosion on forklift during the transfer of facility cask to disposal room. The forklift usually has about 20 gals (75.7 L) of diesel fuel. The cause of this event is a diesel fuel leak. An ignition source could ignite the fuel and cause a fire and then a subsequent explosion. The fire and subsequent explosion could potentially damage the facility cask and waste canister and cause a breach of the waste canister because neither the facility cask or the waste canister are qualified for a fire or explosion. The thermal and explosive stress on the waste canister could

cause a significant release of radioactivity. The immediate worker(s) could also receive a significant direct radiological exposure from the breached waste canister.

Hazardous event 10-3 postulated a hydraulic oil fire on the HERE during the emplacement of waste canister in borehole. The HERE usually has about 40 gal (151.4 L) of hydraulic oil[29]. The cause of this event is a hydraulic oil leak. An ignition source could ignite this fuel and may cause a fire and maybe a subsequent explosion. According to its MSDS, the hydraulic oil is slightly flammable (NFPA rating of 1) and there is no explosion hazard[30]. On the basis of following conditions, it is not likely that a hydraulic oil fire will start:

- The leaked hydraulic oil will form a pool under and around HERE because there is no catch pan to collect any potential leaks. The leaked hydraulic oil will be absorbed by the salt and there could be a small layer of hydraulic oil on the salt surface.
- There are no known ignition sources that could ignite hydraulic oil.

Even if the fire is started, there will be no release of radioactive material as shown in accident RH1, Fire in the Underground.

Preventive and Mitigative Features - General preventive and mitigative measures identified in the HAZOP for this specific scenario are listed in Table 5.1-10.

Estimated Frequency - The HAZOP Team qualitatively estimated the frequency of occurrence of a fire followed by an explosion in a waste canister in the Underground facility to be in the anticipated range ($10^{-1} \geq$ frequency$>10^{-2}$) for both hazardous events. For accident RH1, the overall frequency of breach of waste canister due to fire from forklift operations in the Underground is beyond extremely unlikely (10^{-6}/yr $\geq$ frequency). Therefore, the frequency of an explosion after fire would be lower and would still fall under the beyond extremely unlikely bin. Risk evaluation guidelines are not identified for an event with a frequency $\leq 10^{-6}$/yr. The frequency for event 10-3 was not calculated because there is no explosion hazard from the hydraulic oil.[30]

Source Term Development - The frequency of this accident is Beyond Extremely Unlikely (BEU) (10^{-6}/yr $\geq$ frequency). This event is analyzed in this section and discussed further in the Beyond Design Basis Accident (BDBA) section.

Radiological Waste Canister Inventory (CI) - Based on the postulated scenario, the CI for this accident has been determined to be the inventory contained in one waste canister. As discussed in Section 5.2.1.1, it is assumed that the waste canister contains the maximum radionuclide inventory of 80 PE-Ci for direct loaded waste and 240 PE-Ci for double confined waste. The waste canister is conservatively assumed to contain 95 percent noncombustible and five percent combustible material as discussed in Section 5.2.1.1.

Non-radiological Waste Canister Inventory (CI) - As discussed in Section 5.2.1.1, the non-radiological CI development process for events which involve a breach of a waste canister is simplified by assuming that 100 percent of the VOC headspace inventory is released instantaneously. VOCs selected for consideration for accidental releases are listed in Table 5.1-2. The weighted average of VOCs in the RH waste is assumed to be the same as in CH waste. The mass of VOCs is based on the moles of gas present in the RH waste canister. A void space of 70 percent, same as in CH waste drums, is used for calculating moles of gas present in the RH waste canister.

Damage Ratio - Based on the design of the 41 ton forklift, the canister inside the facility cask is located approximately 15 feet from the fuel tank where the explosion occurs. It is conservatively assumed, to encompass the uncertainty in the application of test data and the variation in waste forms, that the DR for

facility cask containing a Type A (or equivalent) waste canister in this class of accident is 0.01 (DR=0.01) for direct loaded waste and 0.001 (DR =0.001) for double confined waste.

Airborne Release Fraction and Respirable Fraction - As discussed in Section 5.2.1.1, the ARF for contaminated combustible materials which are subjected to impact from the explosion and breach of the waste canister is 0.001. This value represents a bounding ARF for packaged material in a canister which fails due to impact from the explosion (DOE-HDBK-3010-94, subsection 5.2.3.2).[5] The bounding RF is 0.1 (DOE-HDBK-3010-94, subsection 5.2.3.2).[4]

The ARF for contaminated noncombustible materials which are subjected to impact from the explosion and breach of the waste canister for solids that do not undergo brittle fracture is 0.001. This value represents a bounding ARF for packaged material in a canister which fails due to impact from the explosion (DOE-HDBK-3010-94, subsection 5.3.3.2.2).[4] The bounding RF is 1.0 (DOE-HDBK-3010-94, subsection 5.2.3.2).[4]

Leakpath Factor - Based on the scenario description, it is not expected that a fire followed by an explosion in the Underground will also disable the underground ventilation or HEPA filtration systems. Shift of the underground ventilation system may occur manually or automatically as discussed in detail in Section 4.4.2.3. However, it is assumed that an automatic shift to filtration will not respond to mitigate a release for this scenario. For the mitigated case, it is assumed that the CMR operator will be notified or be aware of the accident and actuate the shift to filtration. Credit is <u>not</u> taken for the natural attenuation provided by the discharge path.

Estimated non-involved worker and MEI Consequences and Comparison to Risk Evaluation Guidelines- Based on the values for the source term variables as presented above, the worst-case, no-mitigation MEI and noninvolved worker consequences (see Appendix E, Tables E-10, E-11, and E-12) of the Fire followed by an Explosion in the Underground (RH5) are within the radiological and non-radiological risk evaluation guidelines for the extremely unlikely range.

Assessment of Immediate Worker Consequences- No current risk evaluation guidelines exist for the assessment of <u>accident</u> consequences to immediate workers. Therefore, in the absence of guidelines, and for conservatism, the noninvolved worker radiological guidelines are used as a reference point for the assessment of consequences to immediate workers and the evaluation of the adequacy of the WIPP defense-in-depth features. The worst-case consequences to the immediate worker from RH5 (Table E-15) are well within the risk evaluation guidelines. Therefore, no specific additional worker protection engineering or administrative controls beyond those already qualitatively identified as providing defense-in-depth for the immediate worker, are needed based on the quantitative consequence assessment results.

Safety Structures, Systems, and Components - Based on the frequency of this accident, Safety Class or Safety significant SSCs are not required. The following input data and assumptions are used in the frequency analysis:

- Throughput of waste canisters is 208/year which translates to 208 forklift operations per year.
- There is not another facility cask containing a RH waste canister or any CH waste in the path of the forklift transporting a filled facility cask to the disposal room.
- RH waste canisters are vented
- A spotter is present when the RH waste canister is transported by the forklift in the Underground.
- Maximum volume of hydraulic oil in the HERE is $\leq$ 40 gal (151.4 L).

The defense-in-depth SSCs which are applicable to this scenario, per the criteria in Chapter 3, Section 3.1.3 are assigned as follows:

- Vented DOT Type A (or equivalent) RH Canister - primary confinement
- Underground Ventilation System - secondary confinement
- Design of Fuel and Hydraulic Oil Tank - Designed to minimize leaks

Section 5.2.4.1, Evaluation of the Design Basis, discusses in greater detail: (1) the evaluation of safety SSCs and (2) the applicability of functional and performance requirements (system evaluation) and controls (TSRs). Detailed design descriptions for the above defense-in-depth SSCs may be found in the applicable SDDs as referenced in Chapter 4.

Due to the importance of the WIPP Emergency Management Program,[36] TSR ACs are derived in Chapter 6 and required in the WIPP TSR document.

5.2.3.7 RH6 Seismic Event

Scenario Description - The possibility of a seismic event has been identified as part of the HAZOP [28] performed for the RH TRU Waste Handling system. This scenario represents a natural phenomena induced accident which may involve the potential breach of waste canisters.

The hazardous event 13-1 postulates a design basis earthquake (DBE). As discussed in Chapters 2 and 3 of this SAR, the DBE is the most severe credible earthquake expected to occur at the WIPP Site. The DBE is based on a 1,000-year return interval established through a site specific study. The maximum ground acceleration for the DBE is 0.1 g in both the horizontal and vertical directions, with ten maximum stress cycles. The potential consequences of this event are: major disruption of facility operations, damage or breach of a waste canister(s), loss of site utilities, release of radioactive materials, radiological impact offsite, fire, explosion, and worker injury and/or fatality. The potential breach of a waste canister could cause a significant release of radioactivity to the environment.

There is a possibility of a subsequent fire after a DBE in the above ground facilities at WIPP. An analysis done at Savannah River Site shows that the frequency of a fire after an unlikely seismic event is extremely unlikely [44]. It is assumed that the frequency of a fire after a DBE at WIPP would also be extremely unlikely (10^{-4}/yr $\geq$ frequency $>10^{-6}$/yr). As shown in accident RH2, the maximum temperature of the waste canister will be $\leq$500 °F (260°C) from a potential hydraulic oil fire in the WHB. Thus there will be no release of waste material from the waste canister after a hydraulic oil fire. The other potential fires after a DBE are evaluated in *Source Term Development.*

Mine experience and studies on earthquake damage to underground facilities show that tunnels, mines, wells, etc., are not damaged for sites having peak accelerations at the surface below 0.2 g [45]. Therefore, underground structures and components are not subject to DBE[6]. There would be no release of RH waste material from the underground facilities.

It is postulated that as a result of the DBE, internal events within the WHB may cause the loss of primary containment (e.g. process/equipment disruption resulting in waste canister drops/falls and breaches) and release airborne radiological and/or non-radiological hazardous materials. The above ground WHB RH waste handling process was reviewed to determine the process step (1) most vulnerable to the DBE, and (2) bounding in terms of potential to release airborne hazardous materials.

Two process steps were identified: (1) the loading of a waste canister into the facility cask and movement of facility cask, containing a waste canister, to the Conveyance Loading Room, and (2) 72B cask in the Transfer Cell in the process of being unloaded, are considered as the most vulnerable to DBE movement.

Design Class II DBE SSCs, including the WHB structure and structural components, and tornado doors are designed to withstand a DBE free-field horizontal and vertical ground acceleration of 0.1 g, based on a 1,000-year recurrence period, and retain their design function[6]. Additionally, the main lateral force resisting members of the Support Building and Building 412 are DBE designed to protect the WHB from their structural failure. Therefore, there would be no release from the 72B cask or facility cask as they are being processed in the WHB.

The original design for WIPP used the 1982 Uniform Building Code and predated both DOE 6430.1A and UCRL-15910[46]. An updated assessment of the DBE was performed in 1990 by Bechtel.[47] The assessment showed that the design classifications shown in the original design for WIPP either met or exceeded the newer standards for DBE for nonreactor facilities.

With regard to coincident power loss during a DBE, off-site power loss is analyzed in the initiating event development for the RH3, LOC in the WHB, and RH4-A, LOC in the Underground (waste hoist failure), accident scenarios. The RH cranes and waste hoist design provides for fail safe condition during loss of power (brake set during loss of power). Also, since the waste hoist system (headframe, waste shaft, and shaft furnishings) will withstand the DBE, no release scenarios are postulated involving failure of the hoist as a result of a DBE initiating event. The frequency of coincident DBE and/or DBE power loss, and failure of the waste hoist brakes is beyond extremely unlikely. The analysis in RH3 and RH4-A consider, in quantification of the event frequencies, the more likely scenario of loss of normal off-site power, as opposed to resulting from a less likely DBE. Regardless of initiating event frequency, the consequences of RH3 and RH4-A, if off-site power loss and failure of the brake systems were to occur, are analyzed in each respective accident scenario evaluation in this section.

Preventive and Mitigative Features - General preventive and mitigative measures identified in the HAZOP for this specific scenario are listed in Table 5.1-10. These measures should be reviewed to comprehend the amount of features that are in place that either prevent and/or mitigate against this accident.

Estimated Frequency - The DBE is based on a 1,000-year return interval. The frequency of the DBE is 10^{-3}/yr and the frequency bin is "unlikely" (10^{-2}/yr $\geq$ frequency $>10^{-4}$/yr).

Source Term Development - The waste canister will maintain its containment function because the following systems will retain their design function during and after a DBE:

- Grapple hoist is designed such that it would not drop or affect the containment integrity of the waste canister when transferring a waste canister from the 72B cask into the facility cask during and after a DBE.
- Shuttle car in the Transfer Cell is designed such that it would not drop or affect the containment integrity of the waste canister during and after a DBE
- Equipment in the Transfer Cell is designed such that it would not affect the containment integrity of the waste canister during and after a DBE.

- Fires starting in the Support Building, the WHB, or Building 412 has the potential to destroy the entire structure. This potential fire was analyzed and the frequency was found to be beyond extremely unlikely in the existing FHA[48]. The design of the RH waste handling operation is such that fires starting in the WHB will not have the fuel load to spread to other areas. This lack of potential is due to low combustible loading, the favorable arrangement of combustible materials, relatively few ignition sources, and the large open space with high ceiling that characterizes most of the work areas.

No hazardous material is postulated to be released during the DBE because of the design features described above, therefore, no source term is developed.

Estimated Consequences and Comparison to Risk Evaluation Guidelines - No hazardous material is postulated to be released during the DBE, therefore, no consequence analysis is developed.

Safety Structures, Systems, and Components - No hazardous material is postulated to be released during the DBE, therefore no Safety Class or Safety Significant SSCs are not required. The following input data and assumptions are used in the analysis:

- Grapple hoist is designed such that it would not drop or affect the containment integrity of the waste canister when transferring a waste canister from the 72B cask into the facility cask during and after a DBE.
- Shuttle car in the Transfer Cell is designed such that it would not drop or affect the containment integrity of the waste canister during and after a DBE
- Equipment in the Transfer Cell is designed such that it would not affect the containment integrity of the waste canister during and after a DBE.

The defense-in-depth SSCs which are applicable to this scenario, per the criteria provided in Chapter 3, Section 3.1.3 are assigned as follows:

- Vented DOT Type A (or equivalent) waste container - primary confinement
- Design of facility cask - Prevents/minimizes releases from the waste canister
- Design of 72B cask - Prevents/minimizes releases from the waste containers (drums/canis)

Section 5.2.4.1, Evaluation of the Design Basis, discusses in greater detail: (1) the evaluation of safety SSCs, and (2) the applicability of functional and performance requirements (system evaluation) and controls (TSRs). Detailed design descriptions for the above defense-in-depth SSCs may be found in the applicable SDDs as referenced in Chapter 4.

As shown in Chapter 6, based on the criteria for assigning Technical Safety Requirement (TSR) Limiting Conditions for Operation (LCOs), these equipment are not assigned TSR LCOs. However, due to the importance of DBE qualification, and programs relating to configuration and document control, quality assurance, preventative maintenance and inspection, the WIPP RH WAC, and the WIPP Emergency Management in the WIPP defense-in-depth strategy for this accident, TSR ACs are derived in Chapter 6 and required in the WIPP TSR Document.

5.2.3.8 RH7 Tornado Event

The RH waste handling processes at WIPP are examined for the need to protect against high wind, tornado, and wind blown missiles. Underground facilities are inherently protected against these phenomenon, and as such, the examination deals only with surface facilities. Areas of concern for the release of radiological and non-radiological hazardous materials associated with RH TRU waste are: (1) road cask parking and unloading areas; (2) RH waste handling areas within the WHB, the waste hoist, WHB, and underground ventilation systems. These are described as follows:

- The 72B cask is designed to withstand the effects of high wind, tornado, tornado driven missiles, and overturning without the release of waste contents as part of the RH-TRU 72-B road cask safety analysis report[49].
- The WHB (including the cranes and grapple hoist used for RH waste handling) and waste hoist are protected by the WHB structure, and tornado doors. The structure and doors, passively withstand the winds, pressure change, and missile forces to ensure that the waste and waste hoist are not subjected to unacceptable forces.
- All WHB tornado doors are required to be closed when RH waste is present in the WHB.
- The WHB exhaust system and HEPA filters are contained within the WHB and are protected from wind forces and missiles by the tornado hardened features of the building structure and the tornado hardened closures (doors). The ventilation system is not required to remain operating during and after the tornado, but rather is protected against dispersal of minor contamination on HEPA filters. No tornado coincident need for confinement active ventilation is postulated due to the extremely low tornado frequency and the absence of common cause events since all crane and hoisting mechanisms are protected (with braking systems that actuate upon loss of power) from accident conditions due to loss of power.

Scenario Description - The possibility of a tornado event has been identified as part of the HAZOP[28] performed for the RH TRU Waste Handling system. Hazardous event 13-2 postulates a design basis tornado (DBT). The potential consequences of this event are: breach of waste canister, personnel injury or fatality, major release of radioactive materials, considerable impact onsite and offsite, and loss of site utilities.

As discussed in Chapters 2 and 3, the DBT is the most severe credible tornado that could occur at the WIPP Site. The DBT used for the WIPP has a maximum wind speed of 183 mi (284.5 km) per hour including effects of suction vortices, a translational velocity of 41 mi (65.9 km) per hour, a tangential velocity of 124 mi (200 km) per hour, a 325 ft (99 m) radius of maximum wind, pressure drop of 0.5 lb/in^2 (351.5 kg/m^2), and rate of pressure drop of 0.09 lb/in^2 (63.3 kg/m^2) per second, with a mean recurrence interval of 1,000,000 years.

Design Class II DBT SSCs (see Table 4.1-1) are designed to withstand winds generated by this tornado (183 mi [284.5 km] per hour), based on a 1,000,000-year recurrence period, and retain their safety function. The WHB structure and structural components (including the cranes and grapple hoist used for RH waste handling), including tornado doors are designed to withstand the DBT.

No credible internal events within the WHB can be postulated to cause the loss of primary confinement (e.g. process/equipment disruption resulting in waste canister drops/falls and breaches) and release airborne radiological or non-radiological hazardous materials as a result of the DBT. With regard to coincident power loss during a DBT, off-site power loss is analyzed in RH3 and RH4-A accident scenarios. The cranes and waste hoist design provides for fail safe condition during loss of power (brake set during loss of power). The frequency of coincident DBT caused power loss and failure of the cranes or waste hoist brakes is beyond extremely unlikely (10^{-6}/yr $\geq$ frequency). The analyses in RH3 and RH4-A consider the more likely scenario of loss of normal off-site power, as opposed to resulting from a less likely DBT. The consequences of RH3 and RH4-A, if off-site power loss and failure of the brake systems were to occur, are analyzed in each respective accident scenario evaluation.

With regard to the effects of missiles generated by the DBT, the WIPP is designed on a single failure basis. It is considered incredible that two or more failure events (breach of the WHB and breach of waste canister by a DBT missile which results in a release of significant quantities of radionuclides that require confinement) can occur simultaneously, therefore, the effects of missiles are not evaluated.

Table 4.1-1, identifies those Design Class II and IIIA DBT SSCs, Table 3.1-2 identifies the applicable design code requirements, and Section 3.2 identifies the applicable DBT structural design criteria for WIPP DBT SSCs. Detailed design information may be found in the respective SDD.

Design Class II and IIIA SSCs from Table 4.1-1 applicable to the DBT aboveground are the:

- WHB structure and structural components (including the cranes and grapple hoist used for RH waste handling) including tornado doors - Design Class II (provides physical confinement)

Additionally, the auxiliary Air Intake shaft and tunnel (Bldg. 465) is DBT designed, and the main lateral force resisting members of the Support Building and Building 412 are DBT designed to protect the WHB from their structural failure.

As shown in Table 3.1-2, Design Class II, and IIIA structures and supports necessary for the confinement of radioactivity are DBT designed. The function provided is to prevent tornado forces or missiles from causing failure of the primary confinement boundaries (waste canister). Therefore, no releases of hazardous materials are postulated as a result of the WIPP DBT designed mitigative/preventative SSCs.

Preventive and Mitigative Features - General preventive and mitigative measures identified in the HAZOP for this specific scenario are listed in Table 5.1-10.

Estimated Frequency - The DBT is the most severe credible tornado (183 mi [284.5 km] per hour wind) that could occur at the WIPP site, based on a 1,000,000-year recurrence period. Therefore, the frequency of the DBT event is 10^{-6}/yr and the frequency bin is "extremely unlikely" (10^{-4}/yr $\geq$ f $>10^{-6}$/yr).

The DBT was developed by a site specific study SMRP No. 155, "A Site-Specific Study of Wind and Tornado Probabilities at the WIPP Site in Southeast New Mexico," Department of Geophysical Sciences, T. Fujita, University of Chicago, February 1978 and its Supplement of August 1978. [50]

Source Term Development - No hazardous material is postulated to be released as a result of the DBT, therefore, the source term development is not required.

Estimated Consequences and Comparison to Risk Evaluation Guidelines - No hazardous material is postulated to be released as a result of the DBT, therefore, consequence analysis is not required.

Assessment of Immediate Worker Consequences- As discussed in Section 5.2.1.2, this scenario is not evaluated for immediate worker consequences.

Safety Structures, Systems, and Components - No hazardous material is postulated to be released during the DBT; therefore, Safety Class or Safety Significant SSCs are not required. The following input data and assumptions are used in the analysis:

- The 72B cask is designed to withstand the effects of high wind, tornado, tornado driven missiles, and overturning without the release of waste contents as part of the RH-TRU 72-B road cask safety analysis report[49].
- The WHB (including the cranes and grapple hoist used for RH waste handling) and waste hoist are protected by the WHB structure, and the tornado doors.

The defense-in-depth SSCs which are applicable to this scenario, per the criteria provided in Chapter 3, Section 3.1.3 are assigned as follows:

- WHB structure (includes structure and structural components which includes the cranes and grapple hoist used for RH waste handling) designed to prevent failure during a DBT resulting in a loss of secondary confinement

Additionally, the main lateral force resisting members of the Support Building and Building 412 are DBT designed to protect the WHB from their structural failure.

Section 5.2.4.1 discusses in greater detail: (1) the evaluation of safety SSCs, and (2) the applicability of functional and performance requirements (system evaluation) and controls (TSRs). Due to the importance of DBT qualification, and programs relating to configuration and document control, quality assurance, preventative maintenance and inspection, the WIPP RH WAC, and the WIPP Emergency Management Program, in the WIPP defense-in-depth strategy for this accident, TSR ACs are derived in Chapter 6 and required in the WIPP TSR Document.

5.2.3.9 RH8 Aircraft

Scenario Description - The possibility of an aircraft crash into the WHB has been identified as part of the HAZOP performed for the CH TRU waste handling system. This scenario represents an external accident which may involve the potential breach of waste containers. It is postulated that a military or civilian aircraft crashes into the WHB. DOE-STD-3014-96, Accident Analysis for Aircraft Crash into Hazardous Facilities,[53] provides criteria for the development of frequencies of aircraft accidents used in analyses for nuclear power plants and for crash frequency contributions associated with airport operations (takeoffs and landings), and federal airway activity (overflights).

As described in Chapter 2, two federal ten-mile wide airways (one jet route and one low-altitude route) pass within five miles of the WIPP. Traffic data show that the combined traffic is about 28 instrument flight rule flights per day.

There are no airports or approaches within a five-mile radius of the WIPP. The nearest airstrip, twelve miles north of the site, and privately owned by Transwestern (TW) Pipeline Co. is no longer in use and TW filed for abandonment in 1990 with the Federal Aviation Administration. The nearest commercial airport is in Carlsbad (28 miles to the west).

There are no military facilities within a five mile radius of the WIPP, however, some military installations in New Mexico and Texas have operations that might affect the WIPP (the closest is Holloman Air Force Base, 138 miles NW of the site).

Using DOE-STD-3014-96[53], the total aircraft hazard probability (combined airway and airport) at the WIPP site is 3.6E-07/yr.

Preventive and Mitigative Features - Air space above facility not part of normal flight patterns and WIPP is in a remote location.

Estimated Frequency - The HAZOP Team qualitatively estimated the frequency of occurrence of an aircraft crash to be beyond extremely unlikely ($10^{-6} \geq$ frequency). This estimated frequency of occurrence has also been documented in ITSC-WIPP-2000-01, Estimate of Aircraft Impact Frequency and Consequences at the WIPP,[54] considering the total aircraft hazard probability (combined airway, airport, and military designated airspace operations probability of an aircraft crash).

Source term Development - The frequency of the accident scenario is beyond extremely unlikely therefore, source term development is unnecessary.

Estimated Consequences and Comparison to Risk Evaluation Guidelines - The frequency of the accident scenario is beyond extremely unlikely therefore, consequence analysis is unnecessary.

Assessment of Immediate Worker Consequences- As discussed in Section 5.2.1.2, this scenario is not evaluated for immediate worker consequences.

Safety Structures, Systems, and Components - This scenario is considered beyond extremely unlikely and no hazardous material is postulated to be released during this scenario, therefore, no Safety Class or Safety Significant SSCs are required.

There are no defense-in depth SSCs applicable to this scenario, per the criteria provided in Chapter 3, Section 3.1.3.

5.2.3.10 NC1 Fire in the Hot Cell

Scenario Description - The 10-160B HAZOP[56] postulated a waste drum breach from a fire in the Hot Cell. The HAZOP[56] postulated two hazardous events (9-1 and 11D-1) that could result in a fire in the Hot Cell which could cause a significant release of radioactivity.

Hazardous event 9-1 postulates a fire in the Hot Cell that causes a fire in a drum(s). The fire is postulated to occur at the point in the processing of the waste from a 10-160B cask when the waste drums have been removed from the cask and are placed in the Hot Cell for processing and storage until they are placed in a facility canister for final disposal. The possible cause of the fire is an electrical short. This event would be a fire external to the waste drums. The external fire would have to be of sufficient severity to cause a fire in a drum or multiple drums, resulting in the release of the material contained in the drums.

Hazardous event 11D-1 postulates a fire in the Hot Cell that causes the release of radioactive materials. The fire is postulated to occur during the transfer of the waste drums to the facility canister. Part of the process is welding the lid to a facility canister. The possible cause of the fire is ignition of combustibles inside a facility canister due to heat generated by welding. This event is different from Event 9-1 in that the fire is internal to the waste drum. The potential release is limited to the waste drums in a facility canister being prepared for disposal. At the time the 10-160B HAZOP was performed, the design of the facility canister required the lid to be welded to the canister body. The facility canister design was changed so that the lid mechanically locks to the canister body and welding is no longer performed. Since welding is no longer performed, further analysis will not be performed on event 11D-1.

Preventive and Mitigative Features - General preventive and mitigative measures identified in the HAZOP for this specific scenario are listed in Table 5.1-10.

Estimated Frequency - The HAZOP Team qualitatively estimated the frequency of occurrence of a fire in the Hot Cell to be in the anticipated range (10^{-1}/yr $\geq$ frequency $>10^{-2}$/yr) for hazardous event 9-1. However, based on a quantitative evaluation using conservative assumptions documented in Appendix A and below, the overall frequency of the fire in the Hot Cell while containing stored waste (event 9-1) is extremely unlikely (10^{-4} $\geq$ frequency $>10^{-6}$/yr). The following assumptions are used in this analysis:

- Drums meet WIPP WAC for flammable gases
- Combustible materials program will limit the combustible materials in the Hot Cell
- The Hot Cell walls constitute an effective fire barrier to keep a fire originating outside the Hot Cell from propagating to the Hot Cell
- No more than 2080 waste drums from 10-160B casks are processed through the Hot Cell in one year

This accident is initiated by hazardous event 9-1. The frequency or estimated annual likelihood of occurrence of Event 9-1is determined by the following factors:

- The likelihood that an electrical short occurs in the Hot Cell that initiates a fire.
- The likelihood that there is sufficient combustible material in the Hot Cell to generate sufficient heat to ignite the contents of a waste drum.
- The likelihood that there is sufficient oxidant in the drum to support a sustained fire.

The frequency of a fire occurring in the Hot Cell can be estimated as:

Frequency of Fire (per year) = Probability of electrical short igniting fire x Probability of sufficient combustible material in Hot Cell to ignite drum contents x Probability of sufficient oxidant x Number of drums handled per year

In order for an electrical short to ignite a fire, an electrical fault must occur and the protective device on the circuit (circuit breaker or fuse) must fail to operate to clear the fault. Per WSRC-TR-93-262,[21] electrical faults (including short circuits) have frequencies on the order of 1E-06 to 1E-07 per hour or 9E-03 to 9E-04 per year per termination or cable. If it is conservatively assumed that an electrical short in the equipment in the Hot Cell occurs with waste stored in the Hot Cell, then the probability of a fire initiated by an electrical short can be approximated as the demand failure of the circuit breaker or fuse. From WSRC-TR-93-262,[21] the failure of a circuit breaker or fuse is 5.0E-04/demand. Therefore, the probability of an electrical short igniting a fire in the Hot Cell in one year can be estimated as 5.0E-04. Note that probabilities are dimensionless.

The probability that there is sufficient combustible material in the Hot Cell that a large enough fire to result in igniting the material in a waste drum is based on a violation of the procedural requirements of the combustible control program for WIPP. Therefore, the probability of having sufficient combustible material in the Hot Cell to generate a large enough fire to ignite the waste material in a drum can be equated to a human error in failing to properly follow procedures. Table D-1 of the WIPP CH SAR[6], provides estimated human error probabilities. For this case, it is assumed that the failure to properly meet the combustible control program requirements would involve an error to accomplish a clear, unambiguous task and the failure of a checker (not independent in time) to detect the error. From Table D-1 of the WIPP CH SAR[6], the human error probability to accomplish a clear unambiguous task is 1.0E-03/demand and the failure of a checker to identify the error is 1.0E-01/demand. If it is conservatively assumed that the handling of each drum in the Hot Cell represents the opportunity to violate the combustible loading control program, then the probability of having sufficient combustibles to generate a large enough fire to ignite the waste material in a drum is:

Probability of sufficient combustible material in Hot Cell to ignite drum contents = 1.0E-03 x 1.0E-01 = 1.0E-04

The probability that there is sufficient oxidant in a waste drum to support a sustained fire is provided in Table D-1 of the WIPP CH SAR[6]. It provides a probability of 4.2E-03.

The total number of 10-160B casks that will be handled in the RH facility during one year is estimated to be 208 in Table D-1 of the WIPP CH SAR[6]. There are up to 10 waste drums in each 10-160B cask. Therefore, the total number of waste drums handled in one year is 2,080. (Note that using the total number of waste drums that are handled in the Hot Cell during one year is a conservative, bounding assumption. At most, only 10 waste drums not in facility canisters can be stored in the Hot Cell at any one time and each waste drum is handled only once. A more accurate estimate of the number of drums at risk is 10.)

Using the above values, the frequency of Event 9-1 occurring can be estimated as: Frequency of Fire (per year) = 2080 drums/year x 5.0E-04 x 1.0E-04 x 4.2E-03 = 4.0E-07/year. This frequency places the event Fire in Hot Cell While Containing Stored Waste (9-1) in the "extremely unlikely" frequency bin (10^{-4}/yr $\geq$ frequency $>10^{-6}$/yr).

Source Term Development - Since event 11-D1 can not occur, the source term is developed specifically for event 9-1.

Material at Risk - Both the radiological and non-radiological hazardous material are at risk of being released as the result of a fire in the Hot Cell that results in breach of a waste drum. A conservative approach in determining the accident consequences is taken. As discussed in Section 5.2.1.1, ten waste drums from a 10-160B cask can be stored in the Hot Cell after they are unloaded from the cask with the entire 20 PE-Ci inventory located in a single waste drum (CI = 20 PE-Ci). The storage of up to six fully loaded facility canisters in the Hot Cell is allowed for 90 days. The maximum number of drums stored in the Hot Cell at any one time is 28. Because the cask holds 10 drums, at times one of the canisters may contain one or two waste drums from another cask shipment and be unsealed in the inspection station. However, the combustible loading of the Hot Cell is very low. All of the remote handling equipment in the Hot Cell is electrically operated, there are no hydraulics and therefore no hydraulic oil. The only significant combustible material in the Hot Cell is the electrical cable insulation. Since the release of material in this scenario requires the fire outside of the drums to heat the drum contents to the point where the combustible materials in a drum ignites, the limited combustible loading in the Hot Cell will limit the number of drums that can be heated to a high enough temperature to ignite. Additionally, the drums stored in the facility canisters are provided a second confinement barrier by the canister. These drums are effectively shielded from the direct effects of a fire. Therefore, only the ten drums stored in the Hot Cell awaiting placement in a facility canister are at risk from a fire. There is insufficient combustible loading and direct access to the drums by the fire (some of the drums will be shielded from the fire by other drums) to reasonably expect that multiple drums would be heated to ignition temperature. Therefore, it will be assumed that only one waste drum is heated to a high enough temperature for the contents to ignite, resulting in a release of the radiological material (CD = 1). The radiological MAR for this event is 20 PE-Ci (CD x CI).

As discussed in Section 5.2.1.1, the non-radiological MAR of one waste drum is 243 pounds. The total hazardous chemical compound inventories for the waste drums are shown in Table 5.1-3.

Damage Ratio - As discussed in Section 5.2.1.1, the analysis performed for the CH TRU Central Characterization facility showed that only 16.3 percent of the combustible material in the waste drums is actually burned (DR = 0.163).

Airborne Release Fraction - The ARF for combustible materials in a drum is 5.0E-04 and the ARF for noncombustible materials in a drum is 6.0E-03. These values represent bounding ARFs for the burning of contaminated packaged mixed waste and the heating of noncombustible contaminated surfaces (DOE-HDBK-3010-94, subsection 5.2.1.1 and 5.3.1).[4]

Respirable Fraction - The respirable fractions for the combustible solids (CRF) and noncombustible solids (NCRF) are taken directly from DOE-HDBK-3010-94[4]. The CRF is 1.0 and the NCRF is 0.01.

Leak Path Factor - The scenario of a fire in the Hot Cell would result in the release of the material from the waste drums stored in the Hot Cell to the Hot Cell atmosphere. The Hot Cell atmosphere is exhausted through a HEPA filter bank in the Hot Cell filter gallery and then to the WHB exhaust header. As discussed in Section 5.2.1, the LPF for this scenario is 1.0E-06 with mitigation and 1.0 for no-mitigation.

The LPF due to the HEPA filters is only applicable to the material released as particulates. The liquid hazardous material is vaporized due to the thermal stress of the fire. The HEPA filters are not effective in removing vapor. However, credit is taken for plateout of mercury by assuming 50 percent of the mercury is removed due to plateout (LPF = 0.5). The LPF for all other liquid hazardous materials is 1.0.

Estimated Noninvolved Worker and MEI Consequences and Comparison to Risk Evaluation Guidelines - Based on the values for the source term variables as presented above, the worst-case, no-mitigation MEI and noninvolved worker consequences (Appendix E Tables E-18 and E-19) of event 9-1 are well within the radiological and non-radiological risk evaluation guidelines for the extremely unlikely range. The non-radiological results meet the guidelines (i.e., the sum of ratios < 1) when all the chemicals are added (Tables E-20 and E-21).

Assessment of Immediate Worker Consequences - No immediate worker consequences are calculated for NC1 because no workers are in the Hot Cell, the operation is done remotely.

Safety Structures, Systems, and Components - Based on the consequence analysis results for this accident, Safety Class or Safety Significant SSCs are not required. The following input data and assumptions are used in the frequency and source term analyses:

- Maximum PE-Ci content of 10-160B cask is 20 PE-Ci.
- A combustible materials control program is established for the Hot Cell that ensures insufficient fuel and location of fuel so that a fire in the Hot Cell would not be of sufficient magnitude to damage multiple waste drums.
- The Hot Cell walls constitute an effective fire barrier to keep a fire originating outside the Hot Cell from propagating into the Hot Cell and to keep a fire that originates inside the Hot Cell from propagating to outside areas.
- The maximum hazardous material weight contained in a waste drum is 243 pounds.
- No more than six fully loaded and one partially loaded facility canisters are stored in the Hot Cell at any one time. Also, only ten waste drums removed from a 10-160B cask and not in facility canisters can be in the Hot Cell.
- The hazardous chemical inventory in the RH waste is the same as for the CH waste.
- A 10-160B cask can contain no more than 10 waste drums.
- Total number of waste drums handled in one year in the Hot Cell is 2080.

The defense-in-depth SSCs which are applicable to this scenario, per the criteria in Chapter 3, Section 3.1.3 are assigned as follows:

- Vented DOT Type A waste drum - primary confinement
- WHB Ventilation System - secondary confinement
- Design of Hot Cell - designed to minimize fires

5.2.3.11 NC2 Fire in the Underground

According to Section 5.2.3.1 (RH1), the fire in the underground that causes a release of hazardous materials (radioactive and chemicals) from the facility cask or from a 72B waste canister is not possible. Therefore, a fire during processing the facility cask containing a facility canister of 10-160B waste in the underground would not cause a release of the hazardous materials. The design features and controls credited in the Section 5.2.3.1 will be applicable during the processing of 10-160B waste.

5.2.3.12 NC3 Loss of Confinement in the WHB

Scenario Description - The 10-160B HAZOP [56] postulated a LOC of the waste material in the WHB (CUR, Hot Cell, Transfer Cell, or RH Bay). Twenty hazardous events (1B-6, 4D-1, 4F-1, 4G-1, 4H-1, 5BD-1, 5CE-1, 5CE-2, 9-5, 9AC-1, 10A-1, 10B-1, 10BF-1, 11D-3, 11F-1, 12E-1, 12E-2, 12E-3, 12E-4, and 14B-1) were postulated that could result in a LOC of the waste material in the WHB. The LOC event could cause a significant release of radioactivity.

The events are grouped so that similar events are treated together. Each group will have similar consequences and the consequences for the group as a whole are determined by the most severe of the hazardous events within each group. Note that although the hazardous events in each group may have similar consequences, the frequency of the events in the group may vary. Where the events in a group have different frequencies, the consequences for the group (determined by the most severe event) are compared to the appropriate guidelines for each frequency range contained within the group. This will ensure that the most severe consequences are evaluated against the most limiting evaluation criteria. To simplify the discussion, the groups within the NC3 category are numbered NC3-A, NC3-B, etc.

The general assumptions related to the training, operations and maintenance practices at WIPP that apply to all of the individual LOC event frequency analyses. The following assumptions are used in this analysis:

- WIPP equipment operators are highly skilled and extensively trained in their duties. The operators are highly competent and reliable in the performance of waste handling operations.
- WIPP maintenance programs, especially related to cranes, hoists, and forklifts, is extensive and intended to provide better than average reliability.
- WIPP procedures require pre-operational checks of all waste handling equipment to verify correct performance at the beginning of each shift.
- The 140/25-ton crane and the Hot Cell crane are similar in design, operation and maintenance to the TRUDOCK crane and, therefore, have a similar reliability.
- If a waste drum is placed in a facility canister and the canister is not sealed and left in the Hot Cell awaiting the next 10-160B cask processing, there is no activity that would place the waste drum at risk of being impacted or punctured.
- No more than 208 10-160B casks are processed through the RH Bay in one year
- No more than 693 facility canisters containing waste drums from 10-160B casks are processed through the Hot Cell in one year
- No more than 2080 waste drums from 10-160B casks are processed through the Hot Cell in one year
- Procedures are in place to limit the movement of compressed gas cylinders while 10-160B casks are present in the RH Bay
- Procedures are in place to limit vehicle movement while 10-160B casks are present in the RH Bay

NC3 - Airborne Release Fraction

The two types of accident stresses in the LOC in the Hot Cell and RH Bay accident scenarios are; impact stresses due to dropping and impact stresses due to puncture. Both types of stresses have the same potential for generating airborne releases.

There are two applicable ARFs for materials exposed to impact stresses generated by dropping an object on the waste drums or puncturing the waste drums given in DOE-HDBK-3010-94.[4] One ARF is for combustible solid packaged waste (CARF) and one is for non-combustible solid packaged waste (NCARF). In this analysis, the waste in the drums processed through the Hot Cell and RH Bay is assumed to contain both combustible and non-combustible solid waste. As a conservative, bounding assumption, it is assumed that the solid waste in the drums consists of 5 percent combustible waste (CF = 0.05) and 95 percent non-combustible waste (NCF = 0.95) for the LOC events. The combination of ARF and RF for non-combustibles exposed to impact stresses is higher than for combustibles. This is consistent with the assumptions used in the accident analysis for the CH waste reported in the WIPP CH SAR[6] and with the assumptions used in the accident analysis for the 72B cask.

In addition to being either combustible or non-combustible, the hazardous materials in the waste drums may be either in a gaseous, liquid or solid form. All of the radiological material in the waste is assumed to be in a solid form. The non-radiological hazardous materials may be either in a gaseous, liquid or solid form. The hazardous materials that are in gaseous form are the VOCs shown in Table 5.1-2. It is assumed that the VOCs are instantaneously released from a breached waste drum. The VOCs have an ARF of 1.0 regardless of whether they are combustible or non-combustible.

For the liquid hazardous materials, the ARF is developed based on the assumption that the material is not in a free-standing form. In other words, the liquid is assumed to be absorbed into solid waste material such as rags, kim wipes or other material. The liquid hazardous material is assumed to respond to the accident stresses in the same manner as the solid material in which it is absorbed.

For the non-gaseous radiological and hazardous materials, the ARF depends on whether or not the material is combustible. The bounding value of CARF from DOE-HDBK-3010-94[4], Section 5.2.3.2 for contaminated combustible material which is subjected to impact and breach of the waste drum is 1.00E-03 (CARF = 1.00E-03).

For the non-combustible non-gaseous waste material, the bounding value for NCARF is taken directly from DOE-HDBK-3010-94[4], Section 5.3.3.2.2, which gives a bounding value of 1.0E-03 for materials that do not undergo brittle fracture (NCARF = 1.0E-03).

NC3 - Respirable Fraction

The respirable fractions for the combustible non-gaseous material (CRF) and non-combustible non-gaseous material (NCRF) are taken directly from DOE-HDBK-3010-94[4]. The bounding CRF is 0.1 (page 5-4[4]) and the bounding NCRF is 1.0 (page 5-7[4]). For the VOCs, the CRF and NCRF are both set equal to 1.0. Since the VOCs are assumed to be in gaseous form, all of the VOCs will be respirable.

NC3 - Leak Path Factor

For the LOC accident scenarios that occur in the Hot Cell (NC3-A, NC3-C, and NC3-E) the hazardous material is released to the Hot Cell atmosphere which is exhausted through a HEPA filter bank in the filter gallery and then to the exhaust header. As discussed in Section 5.2.1, the LPF is 1.0E-06 for the mitigated case and 1.0 for the no-mitigation case.

For the LOC accident scenarios that occur outside the Hot Cell (NC3-B, NC3-D, NC3-F, NC3-G, and NC3-H) the release of the hazardous material is to the WHB atmosphere. The WHB atmosphere is exhausted through a HEPA filter bank in the exhaust fan mechanical room and then to the exhaust header. The LPF is 1.0E-06 for the mitigated case and 1.0 for the no-mitigation case. The LPF for the VOCs is 1.0 even for the mitigated case.

NC3-A Dropped Object on Waste Material in Hot Cell Accident Scenario:

NC3-A is composed of events 4F-1, 4H-1, 5CE-2, 9-5, and 9AC-1, all of which involve the dropping of an object during waste handling operations in the Hot Cell.

Events 4F-1 and 4H-1 involve drops occurring while removing the 10-160B cask lid. Hazardous event 4F-1 postulates dropping the shield plug onto a facility canister stored in the Hot Cell, while hazardous event 4H-1 postulates dropping a 10-160B cask lid onto the waste in the Hot Cell. The causes of both events are: human error and/or equipment malfunction. The potential consequences of both events are: breach of facility canisters and/or drums, spread of contamination, offsite and onsite consequences, release of hazardous waste and shut down operations. Breach of a waste canister or drum could cause a significant release of radioactivity to the environment.

The frequency of event 4F-1 is a function of the number of 10-160B casks that are processed each year and the probability of dropping the shield plug while it is being removed. The maximum number of 10-160B casks that will be processed in one year is 208. Therefore, the shield plug will be removed by using the Hot Cell crane 208 times a year. From Table D-9 of the WIPP CH SAR[6] the probability of a crane drop per lift due to all mechanisms is 3.4E-06. Therefore, the frequency of event 4F-1 is: 208 lifts/yr * 3.4E-06 = 7.1E-04/yr or "unlikely" (10^{-2}/yr $\geq$ frequency >10^{-4}/yr).

The frequency of event 4H-1 is a function of the number of 10-160B casks processed each year and the probability of a crane drop. Therefore, the frequency of event 4H-1 is the same as the frequency of event 4F-1 (7.1E-04/yr) or "unlikely" (10^{-2}/yr $\geq$ frequency >10^{-4}/yr).

Hazardous event 5CE-2 postulates dropping a loaded drum carriage inside the Hot Cell onto waste drums or a facility canister. The causes of this event are human error and equipment failure. The frequency of event 5CE-2 is a function of the number of waste drum carriages handled per year and the probability of dropping the carriage while it is being lifted. Since there are two drum carriages in each 10-160B cask, if 208 10-160B casks are processed each year, 416 drum carriages will be lifted. The frequency of event 5CE-2 is: 416 lifts/yr * 3.4E-06 = 1.4E-02yr or "unlikely" (10^{-2}/yr $\geq$ frequency >10^{-4}/yr).

Hazardous event 9-5 postulates the shield plug lift fixture falls (knocked) over. The causes of this event are the fixture is hit by a crane, a load on a crane, or equipment. The potential consequences of this event are: broken shield window (loss of shielding), onsite/offsite consequences, facility worker exposure and personnel injury.

The frequency of event 9-5 is a function of the number of crane operations that are close to the shield plug lifting fixture stand and the probability of a human error that results in striking the shield plug lifting fixture with the crane or its load such that it falls over and strikes waste stored in the Hot Cell. This event occurs during preparation of a facility canister for loading with waste drums. There are 208 10-160B casks processed per year. Each 10-160B cask could contain up to ten waste drums so that up to 2080 waste drums a year could be processed through the Hot Cell. Each facility canister can hold three waste drums. Therefore, a total of (2080/3 =) 693 facility canisters per year can be processed in the Hot Cell and 693 crane movements of the facility canisters will occur in a year. From WSCR-TR-93-581[31], the conservative high probability of a remotely operated crane striking a stationary object is 3E-03 per crane operation. This probability is assumed to apply in this case by assuming that the human error failure rate dominates the equipment (hardware) failure rate that could result in the crane striking the lifting fixture. The probability that a waste drum is mis-positioned and left in a location where it can be struck by the falling shield plug lift fixture is modeled as a human error for failure to properly follow procedures. Table D-1 of the WIPP CH SAR[6], provides estimated human error probabilities. For this

case, it is assumed that the failure to properly follow procedures in the placement of waste drums stored in the Hot Cell would involve an error to accomplish a clear, unambiguous task and the failure of a checker (not independent in time) to detect the error. From Table D-1 of the WIPP CH SAR[6], the human error probability to accomplish a clear unambiguous task is 1.0E-03/demand and the failure of a checker to identify the error is 1.0E-01 per demand. It is also conservatively assumed when the shield plug lifting fixture impacts a waste drum, the waste drum fails. The frequency of event 9-5 is: 693 lifts/yr * 3.00E-03 * 1.00E-03 * 0.1 = 2.0E-04/yr or "extremely unlikely" (10^{-4}/yr $\geq$ frequency > 10^{-6}/yr).

Hazardous event 9AC-1 postulates dropping an empty facility canister on stored waste drums in the Hot Cell. The causes of this event are human error, equipment failure, and grapple failure. The frequency of event 9AC-1 is a function of the number facility canisters handled per year and the probability of dropping a facility canister while it is being lifted. There are 208 10-160B casks processed per year. Each 10-160B cask could contain up to 10 waste drums so that up to 2080 waste drums a year could be processed through the Hot Cell. Each facility canister can hold three waste drums. Therefore, a total of (2080/3 =) 693 facility canisters per year can be processed in the Hot Cell. From Table D-9 of the WIPP CH SAR[6], the probability of a crane drop per lift due to all mechanisms (equipment failure and human error) is 3.4E-06. The frequency of event 9AC-1 is: 693 lifts/yr * 3.4E-06 = 2.35E-03/yr or "unlikely" (10^{-2}/yr $\geq$ frequency >10^{-4}/yr). The consequences of the NC3-A will be compared against the Evaluation Guidelines for the "unlikely" frequency range.

As discussed in Section 5.2.1.1, ten waste drums from a 10-160B cask can be stored in the Hot Cell after they are unloaded from the cask with the entire 20 PE-Ci inventory in a single waste drum (CI = 20 PE-Ci). Additionally, the storage of up to six fully loaded facility canisters in the Hot Cell is allowed for 90 days. The maximum number of drums stored in the Hot Cell at any one time is 28. Because the cask holds ten drums, at times one of the canisters may contain one or two waste drums from another cask shipment and be unsealed in the inspection station. However, the waste drums that are located in the facility canisters are protected from the direct effects of a dropped object (double confinement). Therefore, only the ten waste drums stored in the Hot Cell outside of a facility canister and awaiting placement in a facility canister are subject to the direct effects of a dropped object. Since it is assumed that all of the radiological material from an entire 10-160B cask is located in a single waste drum, assuming that all 10 drums are impacted is equivalent to assuming that the one drum containing all of the radiological material is damaged. Therefore, for the radiological source term analysis, it will be assumed that only one waste drum is breached by a dropped object in the Hot Cell, resulting in a release of the radiological material (CD = 1). The MAR for this event is 20 PE-Ci (CD x CI).

As discussed in Section 5.2.1.1, the average weight fractions are used with the total weight of waste in ten drums to determine the total non-radiological MAR. Each waste drum can contain 243 pounds of hazardous material for a total weight of 2430 pounds of hazardous material per 10-160B cask. The results are shown in Table 5.1-3. The gas space volume in the waste drums is assumed to be the same as that in the CH waste (70 percent void space) and a total volume of 55 gallons for each waste drum. The VOC mass in the waste drum head space is shown in Table 5.2-1.

It is assumed that only the ten waste drums stored in the Hot Cell, not in facility canisters, are subject to the effects of a dropped object. Since all ten of the drums could be impacted by the dropped object, it is assumed that the non-radiological MAR is the content of ten waste drums (CD = 10). The non-radiological MAR = 2430 pounds.

The DR in this case is determined based on the amount of damage the waste drum receives as a result of the impact and how much of the contents are exposed. As discussed in Section 5.2.1.1, the shield plug is approximately four times the 1000 pound weight of a waste drum, it is assumed that the impact of the shield plug on a waste drum would result in a DR four times the DR for dropping a 1000 pound waste drum from the same height. For this event it is conservatively assumed that the DR = 0.1 (4 x 0.025).

Estimated Noninvolved Worker and MEI Consequences and Comparison to Risk Evaluation Guidelines - Based on the values for the source term variables as presented above, the worst-case, no-mitigation MEI and noninvolved worker consequences (Appendix E Tables E-22 and E-23) of NC3-A are well within the radiological and non-radiological risk evaluation guidelines for the unlikely range. The non-radiological results meet the guidelines (i.e., the sum of ratios < 1) when all the chemicals are added (Tables E-24 and E-25).

Assessment of Immediate Worker Consequences - No immediate worker consequences are calculated for NC3-A because no workers are in the Hot Cell where the event occurs.

NC3-B Dropped Object on Waste Material Outside Hot Cell Accident Scenario:

NC3-B is composed of events 4G-1 and 5BD-1, which involve the dropping of an object during waste handling operations outside the Hot Cell.

Hazardous event 4G-1 postulates dropping a 10-160B cask lid onto the cask and its drums. The causes of this event are human error and equipment failure. The frequency of event 4G-1 is a function of the number of 10-160B casks that are processed each year and the probability of a cask lid being dropped while it is being removed. The maximum number of 10-160B casks that will be processed in one year is 208. Therefore, a 10-160B cask lid will be removed by using the crane in the Hot Cell 208 times a year. From Table D-9 of the WIPP CH SAR[6], the probability of a crane drop per lift due to all mechanisms is 3.4E-06. The frequency of event 4G-1 is: 208 lifts/year * 3.4E-06 = 7.1E-04/year or "unlikely" (10^{-2}/yr $\geq$ frequency >10^{-4}/yr).

Hazardous event 5BD-1 postulates dropping the drum carriage lifting fixture onto the drums. The causes of this event are human error and equipment failure. The frequency of event 5BD-1 is a function of the number of 10-160B casks processed each year and the probability of dropping the drum carriage lifting fixture while preparing to remove the waste drum carriages from the cask. 208 10-160B casks will be processed in one year is 208. Since there are two drum carriages in each 10-160B cask, the total number of times the drum carriage lifting fixture will be used is 416 per year. From Table D-9 of the WIPP CH SAR[6], the probability of a crane drop per lift due to all mechanisms is 3.4E-06. The frequency of event 5BD-1 is: 416 lifts/year * 3.4E-06 = 1.4E-03/year or "unlikely" (10^{-2}/yr $\geq$ frequency >10^{-4}/yr).

It is assumed that each of these individual events is independent, then the frequency of the Dropped Object on Waste Material Outside Hot Cell event can be assumed to be equivalent to the highest frequency of the individual events for the purposes of determining which Evaluation Guidelines apply.

Each of the events of NC3-B has a frequency in the "unlikely" range (10^{-2}/yr $\geq$ frequency >10^{-4}/yr). The consequences of NC3-B are compared against the Evaluation Guidelines for the "unlikely" frequency range.

For this accident scenario it is assumed that the entire 20 PE-Ci inventory is located in a single waste drum (CI = 20 PE-Ci). This event involves dropping an object on the waste drums in the 10-160B cask while it is in the CUR. Only one 10-160B cask can be processed through the CUR at one time, therefore only the ten waste drums contained in the 10-160B cask being processed are subject to the direct effects of a dropped object. Since it is assumed that all of the radiological material from an entire 10-160B cask is located in a single waste drum, assuming that all ten drums are impacted is equivalent to one drum containing all of the radiological material is damaged. For the radiological source term analysis, it is assumed that only one waste drum is breached by a dropped object, resulting in a release of the radiological material (CD = 1). The MAR for this event is 20 PE-Ci (CD x CI).

For the non-radiological MAR it is assumed that only the ten waste drums contained in the 10-160B cask being processed in the CUR are subject to the effects of a dropped object. However, the waste drums in the 10-160B cask are in two drum carriages, each containing 5 waste drums. Only the waste drum carriage on the top would be directly impacted by the dropped object. Therefore, it is assumed that the non-radiological MAR is the content of 5 waste drums (CD = 5). The non-radiological MAR is limited to the hazardous material content of 5 waste drums or 1215 pounds.

The DR in this case is determined based on the amount of damage the waste drum receives as a result of the impact and how much of the contents are exposed as a result. As discussed above it is conservatively assumed that the DR is (4 x 0.025 =) 0.1 for this event.

Estimated Noninvolved Worker and MEI Consequences and Comparison to Risk Evaluation Guidelines - Based on the values for the source term variables as presented above, the worst-case, no-mitigation MEI and noninvolved worker consequences (Appendix E Tables E-26 and E-27) of NC3-B are well within the radiological and non-radiological risk evaluation guidelines for the unlikely range. The non-radiological results meet the guidelines (i.e., the sum of ratios < 1) when all the chemicals are added (Tables E-28 and E-29).

Assessment of Immediate Worker Consequences - No immediate worker consequences are calculated for NC3-B because no workers are in the CUR where the event occurs.

NC3-C Dropped Drum or Canister in Hot Cell Accident Scenario:

NC3-C is composed of hazardous events 10B-1, 10BF-1, and 11F-1. All of which involve dropping a waste drum or loaded facility canister inside the Hot Cell.

Hazardous event 10B-1 postulates that while lifting a drum, the drum lid comes off. The causes of this event are human error, equipment failure and drum lid failure. The frequency of event 10B-1 is a function of the number of drums lifted for placement in a facility canister each year and the probability of the drum lid failing during the lift. From examination of the drum and lifting process, it is concluded that the lid falling off during a lift is not a credible event. The ICC-17C 55 gallon drum has a cable lift fixture attached below the first rolling hoop prior to initial drum loading as shown in Figure 4.2-11. The loaded drums were placed in the drum carriage for shipment using the cable lift fixture at the shipping site. The lift cables are placed over the crane hook and the lift executed. This exerts a force on the drum lid ring tending to hold the lid in place. The lift cables are symmetric around the drum to ensure there is no load shift. During the lift, the lift cable forces hold the lid in place.

Hazardous event 10BF-1 postulates while lifting a drum, the drum is dropped. The causes of this event are human error and equipment failure. The frequency of event 10BF-1 is a function of the number of waste drums that are processed through the Hot Cell each year and the probability of dropping a drum while lifting it to be placed into a facility canister. The maximum number of 10-160B casks that will be processed in one year is 208. Since there are ten drums in each 10-160B cask, the total number of times a drum will be lifted to place it in a facility canister is 2080 per year. From Table D-9 of the WIPP CH SAR[6], the probability of a crane drop per lift due to all mechanisms is 3.4E-06 per demand. Additionally, since the drum must be damaged to provide the potential for the release of hazardous material, the probability of damaging a drum due to the impact must be included. From Table D-1of the WIPP CH SAR[6], the probability that one drum in a seven pack that is dropped ten feet fails is given as 0.62. However, this probability includes the crushing effect of the other drums in the package. Since in this case a single drum is dropped, the probability of failure would be lower. Therefore, the probability that a drum is failed by a drop in the Hot Cell is assumed to be 0.3, half the probability from CH SAR [6]. The frequency of event 10BF-1 is: 2080 lifts/year * 3.4E-06 * 0.3 = 7.1E-03/year or "unlikely" (10^{-2}/yr $\geq$ frequency $>10^{-4}$/yr).

Hazardous event 11F-1 postulated dropping a loaded facility canister in the Hot Cell. The causes of this event are canister lid failure, grapple failure, human error and sheared crane cables. The frequency of event 11F-1 is a function of the number of facility canisters that are processed through the Hot Cell each year and the probability of dropping a canister while lifting. The maximum number of 10-160B casks that will be processed in one year is 208. Since there are ten drums in each 10-160B cask, the total number drums will be processed is 2080 per year. Since a facility canister can hold 3 drums, a total of (2080/3) or 693 facility canisters will be processed per year. From Table D-9 of the WIPP CH SAR[6], the probability of a crane drop per lift due to all mechanisms is 3.4E-06. The frequency of 11F-1 is: 693 lifts/year * 3.4E-06 =2.4E-03/year or "unlikely" (10^{-2}/yr $\geq$ frequency $>10^{-4}$/yr).

Each of the events of NC3-C has a frequency in "unlikely" range (10^{-2}/yr $\geq$ frequency $>10^{-4}$/yr). Therefore, the consequences of NC3-C are compared against the Evaluation Guidelines for the "unlikely" frequency range.

The radiological MAR for this accident scenario assumes that the entire 20 PE-Ci inventory is located in a single waste drum (CI = 20 PE-Ci). This event involves dropping a waste drum while loading it into a facility canister or dropping a loaded facility canister in the Hot Cell while preparing it for disposal. Since a loaded facility canister contains three waste drums, failing the three waste drums in the canister due to dropping the canister would require failure of not only the drums but also of the canister (double confinement). The DR for double confined waste releases is much less than for single confined waste (a factor of ten). Therefore, the release from the waste drums in the loaded facility canister is bounded by the release from a dropped waste drum. The other two hazardous events in this accident involve failure of the lid of a waste drum during lifting (a single drum damaged) and dropping a waste drum on top of another during lifting (two waste drums damaged). Since it is assumed that all of the radiological material from an entire 10-160B cask is located in a single waste drum, it is possible that the drum dropped and the drum on which it is dropped could both be the hot loaded drum from separate 10-160B casks. This could occur if the drum left in a partially loaded facility canister is the one containing all of the radiological inventory and the drum dropped on top of it is the drum containing all of the radiological inventory from another 10-160B cask. For the radiological source term analysis, it will be assumed that two waste drums are breached by dropping a waste drum during lifting in the Hot Cell, resulting in a release of the radiological material (CD = 2). The MAR for this event is 40 PE-Ci (CD x CI).

As with the radiological MAR, in determining the non-radiological MAR it is assumed that at most two waste drums in the Hot Cell are subject to the effects of dropping a drum during lifting. It is assumed

that the non-radiological MAR is the content of two waste drums (CD = 2). Therefore, the non-radiological MAR is limited to the hazardous material content of two waste drums or 486 pounds.

The DR in this scenario is determined based on the amount of damage the two waste drums receive as a result of the impact and how much of the contents are exposed as a result. The waste drums are DOT Type A containers. The drop in this event is during lifting operations and is assumed to be greater than four feet. From section 5.2.1.1, the DR for drops of waste containers from heights greater than five feet but less than or equal to ten feet is 0.025. The DR is 0.025 for this event.

Estimated Noninvolved Worker and MEI Consequences and Comparison to Risk Evaluation Guidelines - Based on the values for the source term variables as presented above, the worst-case, no-mitigation MEI and noninvolved worker consequences (Appendix E Tables E-30 and E-31) of NC3-C are well within the radiological and non-radiological risk evaluation guidelines for the unlikely range. The non-radiological results meet the guidelines (i.e., the sum of ratios < 1) when all the chemicals are added (Tables E-32 and E-33).

Assessment of Immediate Worker Consequences - No immediate worker consequences are calculated for NC3-C because no workers are in the Hot Cell where the event occurs.

NC3-D Dropped Drum or Canister Outside Hot Cell Accident Scenario:

NC3-D is composed of hazardous events 5CE-1 and 12E-1. Event 5CE-1 represents dropping a loaded drum carriage in the CUR while removing the carriage from a 10-160B cask. Event 12E-1 represents dropping a loaded facility canister into the Transfer Cell while being lifted in preparation for placing it in a facility cask. If it is assumed that each of these events is independent, then the frequency of the Dropped Drum or Canister Outside Hot Cell event can be assumed to be equivalent to the highest frequency of the individual events for the purposes of determining which Evaluation Guidelines apply.

Hazardous event 5CE-1 postulates dropping a five drum carriage while lifting due to the carriage getting caught and over stressing the lifting fixture or basket. The causes of this event are mechanical/ equipment failure and human error. The frequency of event 5CE-1 is a function of the number of waste drum carriages processed through the Hot Cell each year and the probability of dropping the carriage while lifting it from the 10-160B cask. The maximum number of 10-160B casks that will be processed in one year is 208. Since there are two waste drum carriages in each 10-160B cask, the total number of times a carriage will be lifted is 416 per year. From Table D-9 of the WIPP CH SAR,[6] the probability of a crane drop per lift due to all mechanisms is 3.4E-06. The frequency of event 5CE-1 is: 416 lifts/yr * 3.4E-06 = 1.4E-03/yr or "unlikely" (10^{-2}/yr $\geq$ frequency >10^{-4}/yr).

Hazardous event 12E-1 postulates dropping a loaded facility canister into the Transfer Cell. The causes of this event are equipment failure, human error, and lid failure. The frequency of event 12E-1 is a function of the number of facility canisters that are processed through the Hot Cell each year and the probability of dropping a canister into the Transfer Cell while lifting. The maximum number of 10-160B casks that will be processed in one year is 208. Since there are ten drums in each 10-160B cask, the total number drums will be processed is 2080 per year. Since a facility canister can hold three drums, a total of (2080/3 =) 693 facility canisters will be processed per year. From Table D-9 of the WIPP CH SAR,[6] the probability of a crane drop per lift (F_{Drop})due to all mechanisms is 3.4E-06. The frequency of event 12E-1 is: 693 lifts/yr * 3.4E-06 = 2.4E-03/yr or "unlikely" (10^{-2}/yr $\geq$ frequency >10^{-4}/yr).

Since both events of NC3-D have a frequency in the "unlikely" range (10^{-2}/yr $\geq$ frequency >10^{-4}/yr), The consequences of NC3-D are compared against the Evaluation Guidelines for the "unlikely" frequency range.

The release from the waste drums in the loaded facility canister is bounded by the release from a dropped waste drum carriage. Since it is assumed that all of the radiological material from an entire 10-160B cask is located in a single waste drum, assuming that ten drums are impacted is equivalent to assuming that the one drum containing all of the radiological material is damaged. Therefore, for the radiological source term analysis, it will be assumed that only one waste drum is breached by a dropping the waste drum carriage while lifting it from the 10-160B cask in the CUR, resulting in a release of the radiological material (CD = 1). The MAR for this event is 20 PE-Ci (CD x CI).

In determining the non-radiological MAR it is assumed that ten waste drums in the CUR are subject to the effects of dropping a waste drum carriage during lifting. Since this event postulates dropping a loaded waste drum carriage (containing five drums) onto the second waste drum carriage (also containing five drums), it is assumed that the non-radiological MAR is the content of ten waste drums (CD = 10). The non-radiological MAR is limited to the hazardous material content of ten waste drums or 2430 pounds.

The DR in this case is based on the amount of damage the waste drums receive as a result of the impact and how much of the contents are exposed as a result. The waste drums are DOT Type A containers. The drop in this event is from the lifting fixture on the crane during unloading operations in the CUR. The height of the drop is assumed to be greater than four feet. From section 5.2.1.1, the DR for drops greater than five feet but less than or equal to ten feet is 0.025. The DR for this event is 0.025.

Estimated Noninvolved Worker and MEI Consequences and Comparison to Risk Evaluation Guidelines - Based on the values for the source term variables as presented above, the worst-case, no-mitigation MEI and noninvolved worker consequences (Appendix E Tables E-34 and E-35) of NC3-D are well within the radiological and non-radiological risk evaluation guidelines for the unlikely range. The non-radiological results meet the guidelines (i.e., the sum of ratios < 1) when all the chemicals are added (Tables E-36 and E-37).

Assessment of Immediate Worker Consequences - No immediate worker consequences are calculated for NC3-D because no workers are in either the CUR, Hot Cell or Transfer Cell where the event occurs.

NC3-E Puncture of Drum in Hot Cell Accident Scenario:

NC3-E consists of hazardous event 10A-1 which postulates a puncture of a drum with the PAR manipulator caused by human error and/or equipment failure. The potential consequences of this event are: breach of drum, spread of contamination, offsite and onsite consequences, release of hazardous waste and operational down time. Breach of a drum could cause a significant release of radioactivity to the environment.

The frequency of event 10A-1 is a function of the number of waste drums handled using the PAR manipulator per year, the probability of an error by the operator while using the PAR manipulator such that the arm strikes a waste drum, and the probability that the drum is breached given that it is struck by the arm. As discussed above, 2080 waste drums will be processed through the Hot Cell each year. It is assumed in this analysis that the human error of striking a drum with the PAR manipulator arm is equivalent to the failure to follow a clear, unambiguous procedure. From Table D-1 of the WIPP CH SAR,[6] the probability of failing to correctly follow a clear, unambiguous procedure is 1E-03 per demand. Note that it is also possible that an equipment failure could result in the PAR manipulator striking the drum. However, given the extensive preventative maintenance program and requirement for pre-operational checks of the manipulator at the beginning of each shift, it is assumed that the failure is dominated by human error and the equipment failure probability is not included. ANL/EAD/TM-29[63] provides the conditional probability of drum puncture given that it is struck by equipment during

handling. The probability ranges from 1.0E-02 to 2.0E-03, with one outlier probability reported as 0.25. The use of a conditional probability of waste drum failure due to being stuck by the PAR manipulator arm would be highly conservative. It is unlikely that the PAR manipulator is strong enough to actually puncture a waste drum and most events in which the arm did strike a drum would involve glancing blows. In addition, slip clutches have been provided at each joint (shoulder, elbow, and wrist) to prevent a drum from being punctured. As the robotic arm is manipulated, rotated, or extended from any orientation and contacts the drum lid, the manipulator stops the motion that the operator is directing from the control console. The operator may still have the controls engaged but the arm will not continue in the path of travel. One additional event to be considered is a strike while lowering the manipulator arm with the telescoping tube hoist. The telescoping tube hoist is lowered by cable and has a cable slack limit switch. The switch is provided to detect cable slack that may occur during full extension or when an obstruction is encountered. This precludes the hook from being forced into the drum. The smaller estimate of the probability of 2.00E-03 is divided by 2 because of the slip clutches being used. The frequency of hazardous event 10A-1 is: 2080 operations/yr * 1.0E-03 * 1.0E-03 = 2.1E-03/yr. The frequency of NC3-E is in the "unlikely" range (10^{-2}/yr $\geq$ frequency >10^{-4}/yr) and its consequences of NC3-E are compared against the Evaluation Guidelines for the "unlikely" frequency range.

Since this event involves puncturing a single waste drum, the CD equals 1.

Since it is assumed that all of the radiological material from an entire 10-160B cask is located in a single waste drum, the MAR is 20 PE-Ci (CD x CI). As with the radiological MAR, in determining the non-radiological MAR it is assumed that one waste drum in the Hot Cell is punctured. Therefore, it is assumed that the non-radiological MAR is the content of 1 waste drum (CD = 1). Therefore, the non-radiological MAR is limited to the hazardous material content of 1 waste drum or 243 pounds.

The waste drums are DOT Type A containers. From section 5.2.1.1, the DR for DOT Type A waste drums that are breached by impact with waste handling equipment is 0.05. The DR for this event is 0.05.

Estimated Noninvolved Worker and MEI Consequences and Comparison to Risk Evaluation Guidelines - Based on the values for the source term variables as presented above, the worst-case, no-mitigation MEI and noninvolved worker consequences (Appendix E Tables E-38 and E-39) of NC3-E are well within the radiological and non-radiological risk evaluation guidelines for the unlikely range. The non-radiological results meet the guidelines (i.e., the sum of ratios < 1) when all the chemicals are added (Tables E-40 and E-41).

Assessment of Immediate Worker Consequences - No immediate worker consequences are calculated for NC3-E because no workers are in the Hot Cell where the event occurs.

NC3-F Puncture of Drum or Canister Outside Hot Cell Accident Scenario:

NC3-F is composed of hazardous events 12E-2, 12E-3, 12E-4, and 14B-1.

Hazardous event 12E-2 postulates the Hot Cell shield valve inadvertently closing on a facility canister and shearing the canister. The causes of this event are mechanical-electrical failure or control system failure. The frequency of event 12E-2 is a function of the number of facility canisters processed through the Hot Cell in a year and the probability of spurious closure of the Hot Cell shield valve during movement of the canister. 693 facility canisters will be processed through the Hot Cell and Transfer Cell in a year. The PLG1317[38] evaluation of the probability of the shield valve closing on a waste canister is 2.00E-13 per transfer. The frequency of event 12E-2 is: 693 transfers/yr * 2.00E-13 = 1.4E-10/yr or "beyond extremely unlikely" (10^{-6}/yr $\geq$ frequency).

Event 12E-3 postulates inadvertent movement of the Hot Cell crane while lowering the facility canister into the Transfer Cell and damaging the canister. The causes of this event are mechanical-electrical failure, control system failure, and human error. The frequency of event 12E-3 is a function of the number of facility canisters processed through the Hot Cell in a year and the probability of spurious movement of the Hot Cell crane while the canister is being moved into the Transfer Cell and the probability that the resulting impact ruptures the canister. 693 facility canisters will be processed through the Hot Cell and Transfer Cell in a year. The spurious movement of the Hot Cell crane could be the result of either human error or equipment failure. However, EEG-74[64] indicates that 90 to 95 percent of all crane incidents are caused by operator error. For this analysis, it is assumed that the spurious movement of the crane is due to an operator error. It is also assumed that the error is equivalent to the failure to follow a clear, unambiguous procedure in operating the crane. Table D-1 of the WIPP CH SAR[6] provides a probability of 1E-03 for failure to follow a clear, unambiguous procedure. EANL/EAD/TM-29[63] provides estimates of the conditional probability of rupture of a waste drum due to impact during waste handling operations of from 1E-2 to 2E-3. Since the facility canister is more robust than a waste drum, it would be less likely to breach from an impact than a waste drum. Therefore, the lower value of 2.00E-03 is assumed to apply in this case. The frequency of event 12E-3 is: 693 transfers/yr * 1.00E-03 * 2.00E-03 = 1.4E-03/yr or "unlikely" (10^{-2}/yr $\geq$ frequency >10^{-4}/yr).

Hazardous event 12E-4 postulates inadvertent movement of the shuttle car with the facility canister partially lowered. The causes of this event are mechanical-electrical failure or shuttle car control system failure, human error and interlock failure (shuttle car is interlocked with shield valve). The frequency of event 12E-4 is a function of the number of facility canisters processed through the Hot Cell in a year and the probability of spurious movement of the shuttle car during placement of the canister. 693 facility canisters will be processed through the Hot Cell and Transfer Cell in a year. As discussed in Section 5.2.3.3, the probability of the shuttle car moving while a lift is occurring is 3.30E-12. The frequency of event 12E-4 is: 693 lifts/yr * 3.30E-12 = 2.3E-10/yr or "beyond extremely unlikely" (10^{-6}/yr $\geq$ frequency).

Hazardous event 14B-1 postulates the robotic arm breaches the facility canister during a contamination survey. The causes of this event are robotic control equipment failure. The frequency of event 14B-1 is a function of the number of facility canisters processed per year, the probability of an error by the operator while using the robotic are such that the arm strikes a facility canister, and the probability that a canister is breached when it is struck by the arm. Upon closer examination, it has been determined by the vendor[67] that the robotic arm is designed such that it is not capable of puncturing a facility canister and the drums it contains. Further analysis of this event is not required and is classified as "beyond extremely unlikely" (10^{-6}/yr $\geq$ frequency).

Since the individual events that form NC3-F has a frequency either in the "unlikely" (10^{-2}/yr $\geq$ frequency > 10^{-4}/yr), or "beyond extremely unlikely" (10^{-6}/yr $\geq$ frequency) ranges, the consequences of NC3-F are compared against the Evaluation Guidelines for "unlikely" frequency range.

As discussed previously, it is assumed that the entire 20 PE-Ci inventory is located in a single waste drum (CI = 20 PE-Ci). This event involves breaching a loaded facility canister inside the Transfer Cell. The loaded Facility canister contains three waste drums, all of which could be breached in this vent. As discussed in Section 5.2.1.1, it is assumed that all three drums breached in a facility canister each contain the maximum radiological contents of a 10-160B cask. Therefore, for this event the CD is 3 and the MAR is 60 PE-Ci (CD x CI).

To determine the non-radiological MAR, it is assumed that three waste drums in the Transfer Cell are breached. Therefore, the non-radiological MAR is the content of three waste drums (CD = 3). The non-radiological MAR is limited to the hazardous material content of three waste drums or 729 pounds.

This accident scenario involves the breaching of waste drums inside a facility canister. Only the waste drum confinement is considered for this event. The waste drums are DOT Type A containers. From section 5.2.1.1, the DR for DOT Type A waste drums breached by impact with waste handling equipment is 0.05. Therefore, the DR is 0.05 for this event.

Estimated Noninvolved Worker and MEI Consequences and Comparison to Risk Evaluation Guidelines - Based on the values for the source term variables as presented above, the worst-case, no-mitigation MEI and noninvolved worker consequences (Appendix E Tables E-42 and E-43) of NC3-F are well within the radiological and non-radiological risk evaluation guidelines for the unlikely range. The non-radiological results meet the guidelines (i.e., the sum of ratios < 1) when all the chemicals are added (Tables E-44 and E-45).

Assessment of Immediate Worker Consequences - No immediate worker consequences are calculated for NC3-F because no workers are in the Transfer Cell where the event occurs.

NC3-G Puncture of 10-160B Cask in RH Bay Accident Scenario:

NC3-G consists of hazardous event 1B-6 which postulates the puncture of a 10-160B cask by a compressed gas cylinder in the RH Bay. The causes of this event are human error and gas cylinder failure. Spontaneous failure of a gas cylinder in the RH Bay such that it becomes a missile and strikes a 10-160B cask is considered to be incredible based on the limited number of cylinders (only two cylinders are in the RH Bay) and the general margin of safety in the design of the cylinders. However, if the cylinders are dropped during movement, it is possible for failure to occur such that the cylinders would become missiles. Procedural limits are placed on the movement of compressed gas cylinders in the RH Bay. The gas cylinders are not moved while RH cask operations are occurring in the RH Bay. Therefore, it would require operator error to fail to follow procedures for movement of the cylinders to occur while a 10-160B cask is in the RH Bay. Furthermore, it would also require failure of a checker to identify that the procedure is being violated. From Table D-1 of the WIPP CH SAR[6], the human error probability to accomplish a clear unambiguous task is 1.0E-03 and the failure of a checker to identify the error is 1.0E-01 per demand. The combination of the two is the probability of a gas cylinder movement (operator error) with a 10-160B cask is in the RH Bay.

There are two full gas cylinders in the RH Bay at a time, it is assumed that the cylinders will be changed out four times per year, there would be eight cylinders available for this event to occur. For conservatism, sixteen cylinders are assumed to be moved in the RH Bay in a year. Therefore, it is conservatively assumed there are sixteen chances for the cylinders to be moved in violation of procedure per year. Additionally, even with the violation of procedure and movement of the cylinders, an error resulting in dropping of a cylinder, failure of the cylinder on impact, and the cylinder becoming a projectile and striking a 10-160B cask with sufficient force to damage the DOT Type A drums inside would have to occur. Each of these is examined to produce an estimate of the frequency of the event. For the gas cylinders to fall and become a missile, safe handling procedures must be violated (safety cap not installed, cylinder cart not used, etc.) and the cylinder valve strike a surface and shear off. It is conservatively assumed that this sequence of events has a conditional probability of 0.2. Because of the round shape and robustness of the Type B road cask, the missile must make a head-on strike on the cask. Ignoring the vertical dimension, the probability of the random direction of the gas cylinder impacting the cask head on is conservatively estimated as 5/360 = 1.4E-02.

The 10-160B cask is a certified Type B shipping cask and is designed to withstand vehicle crashes, fires and other transportation hazards. The 10-160B cask SAR[66] contains (puncture test) analysis considering only the outer two inch thick carbon steel wall, which shows the 72,000 lbs loaded cask can withstand a forty inch side drop onto a six inch diameter mild steel bar without significant damage. The maximum loading on the cask outer wall is based on the properties of the six inch diameter mild steel bar (1.26×10^6 lbs). The calculated stress due to bending is 1,613 psi which is less than the 48,000 psi allowable. In addition, the cask wall also contains 1-7/8 inches of lead and an inner wall of 1-1/8 carbon steel. If the cask composite wall was breached, the type A drum would also have to be breached inside of the cask. Based on this a conditional probability for a drum inside the cask to be breached and release its contents is conservatively taken as 0.01. The frequency of hazardous event 1B-6 is: 16 demands/yr * 1.0E-03 * 0.1 * 0.2 * 1.4E-02 * 1E-02 = 4.4 E-08/ yr or "beyond extremely unlikely" (10^{-6}/yr $\geq$ frequency). There are no guideline limits for this frequency.

Estimated Noninvolved Worker and MEI Consequences and Comparison to Risk Evaluation Guidelines - The worst-case, no-mitigation MEI and noninvolved worker consequences of NC3-G are well within the radiological (Appendix E Tables E-46 and E-47) and non-radiological (Tables E-49 and E-50) risk evaluation guidelines for the extremely unlikely range.

Assessment of Immediate Worker Consequences - No current risk evaluation guidelines exist for the assessment of accident consequences to immediate workers. Therefore, in the absence of guidelines, and for conservatism, the noninvolved worker radiological and non-radiological guidelines for the extremely unlikely range are used as a reference point for the assessment of consequences to immediate workers and the evaluation of the adequacy of the WIPP defense-in-depth features. The worst-case consequences to the immediate worker from NC3-G (Appendix E Tables E-48 and E-51) are well within the risk evaluation guidelines. Therefore, no specific additional worker protection engineering or administrative controls beyond those already qualitatively identified as providing defense-in-depth for the immediate worker, are needed based on the quantitative consequence assessment results.

NC3-H Dropped 10-160B Cask in RH Bay Accident Scenario:

NC3-H consists of hazardous event 4D-1 which postulates the 10-160B cask, with loosened lid bolts, falling off the road cask transfer cart (RCTC) in the RH Bay while the cask is being transferred to the CUR. The potential consequences of this event are: loss of production (CH and RH), breach of drums, direct radiological exposure to facility worker, on-site and off-site consequences, spread of contamination, release of hazardous material, facility and equipment damage. Breach of a 10-160B cask and drums could cause a significant release of radioactivity to the environment.

Mechanisms for causing this to occur include derailment of the RCTC during movement, impact of the RCTC by a vehicle in the RH Bay, and impact with the CUR shield door separating the RH Bay from the CUR. Derailment of the RCTC during movement could be the result of either a foreign object on the rails or failure to replace the removable rails at the entrance to the CUR. Analysis[68] has conservatively shown that the event is not a credible as long as vehicles that do not exceed the limits of tables contained in the analysis are not allowed in RH Bay when a 10-160B cask head bolts are removed. The NC3-H event is not a credible event and has a frequency in the "Beyond Extremely Unlikely" range (10^{-6}/yr $\geq$ frequency).

The loaded 10-160B cask contains ten waste drums. All ten of the waste drums could potentially be damaged. However, the waste drums are DOT Type A containers and will withstand a drop of four feet with no damage. Given the height of the 10-160B cask is only slightly more than seven feet[11] and even with the cask falling from an RCTC only the top drum carriage in the cask would experience the equivalent of a drop in excess of four feet. It is assumed that only five waste drums are impacted by this

event. Since it is assumed that all of the radiological material from a 10-160B cask is located in a single waste drum, the five drums impacted is equivalent to assuming the one drum containing all of the radiological material is damaged. Therefore, for the radiological source term analysis, it will be assumed that only one waste drum is breached by the road cask falling over in the RH bay, resulting in a release of the radiological material (CD = 1). The MAR is 20 PE-Ci (CD x CI) for this event.

As with the radiological MAR, in determining the non-radiological MAR it is assumed that five waste drums are subject to the effects of the road cask falling over during movement. Therefore, it is assumed that the non-radiological MAR is the content of five waste drums (CD = 5) or 1215 pounds.

The DR is determined based on the amount of damage the waste drum receives as a result of the impact and how much of the contents are exposed as a result. Since the drop could be greater than four feet in height, it is possible for the waste drums to be damaged. From section 5.2.1.1, the DR for drops of waste containers from the heights greater than five feet but less than or equal to ten feet is 0.025. The DR for this event is 0.025.

Estimated Noninvolved Worker and MEI Consequences and Comparison to Risk Evaluation Guidelines - Based on the values for the source term variables as presented above, the worst-case, no-mitigation MEI and noninvolved worker consequences of NC3-H are well within the radiological (Appendix E Tables E-52 and E-53) and non-radiological (Tables E-55 and E-56) risk evaluation guidelines for the extremely unlikely range.

Assessment of Immediate Worker Consequences - No current risk evaluation guidelines exist for the assessment of accident consequences to immediate workers. Therefore, in the absence of guidelines, and for conservatism, the noninvolved worker radiological and non-radiological guidelines for the extremely unlikely range are used as a reference point for the assessment of consequences to immediate workers and the evaluation of the adequacy of the WIPP defense-in-depth features. The worst-case consequences to the immediate worker from NC3-H (Appendix E Tables E-54 and E-57) are well within the risk evaluation guidelines. Therefore, no specific additional worker protection engineering or administrative controls beyond those already qualitatively identified as providing defense-in-depth for the immediate worker, are needed based on the quantitative consequence assessment results.

NC3-I Toxic Gas Generation in Hot Cell Accident Scenario:

At the time the 10-160B HAZOP[56] was performed, the facility canister design required the lid to be welded to the canister body. The canister design was changed so that the lid mechanically locks to the canister body and welding is no longer performed. Hazardous event 11D-3 postulated that ultraviolet light from the welding activity caused the head space gases in the facility canister to be converted into phosgene gas (toxic) which is released into the Hot Cell. Since welding is no longer performed, no further analysis will be performed on the scenario.

NC3-Safety Structures, Systems, and Components

Based on the source term analysis for this accident, Safety Class or Safety Significant SSCs are not required. The following input data and assumptions are used in the frequency and source term analyses:

- The radiological inventory of a 10-160B cask is limited to 20 PE-Ci.
- The hazardous chemical inventory in the RH waste is the same as for the CH waste.
- The maximum loading of an RH waste drum is 243 lbs of hazardous material.

- A worker involved in a waste-handling accident will stop the operations, examine the cask or drums and determine a breach has occurred, and begin to exit the immediate area within 30 seconds of a waste handling accident occurring..
- A 10-160B cask can contain no more than 10 waste drums.
- The waste drums in a 10-160B cask are DOT Type A (or equivalent) 55 gallon drums.
- No more than two 10-160B casks will be in the RH Bay at one time.
- The RH Bay doors are closed at all times during waste handling activities related to the 10-160B cask inside the bay.
- The CUR shield door is closed during the removal of cask lid or the drums from the cask.
- No more than six fully loaded facility canisters are stored in the Hot Cell.
- Only one partially loaded facility canister is stored in the Hot Cell.
- Only ten waste drums can be stored in the Hot Cell and not in a facility canister. All other waste drums in the Hot Cell are in facility canisters.
- An extended period of time between placing the lid on a fully loaded facility canister and sealing the lid is not allowed to occur.
- The maximum height a waste drum or Facility canister can be dropped in the Hot Cell is 10 ft.
- The air movement rate through the RH Bay cask receiving area is 0.25 m/second.

The defense-in-depth SSCs which are applicable to the above ground LOC scenarios, per the criteria in Section 3.1.3 are assigned as follows:

- DOT Type A waste drums - primary confinement
- WHB Ventilation System - secondary confinement
- Hot Cell - secondary confinement

5.2.3.13 NC4 Loss of Confinement in the Transfer Cell or Underground

Scenario Description - The 10-160B HAZOP[56] refers to the hazard analysis for 72B cask for operations that occur in the Transfer Cell (hazardous events 13ABCD-1 and 14ACDEFGHI-1) and underground (hazardous events 15ABC-1, 16ABCD-1 and 17ABCD-1) during the processing of 10-160B casks. At the point in processing of a 10-160B cask where these events are postulated to occur, the waste drums from the 10-160B cask have been loaded into a facility canister, which is being or has been loaded into a facility cask for disposal.

The potential consequences of the LOC in the Transfer Cell and LOC underground events are not explicitly analyzed in the 10-160B HAZOP[56] because of the following:

- Processing a facility canister or a 72B waste canister in the Transfer Cell until emplacement in the borehole in the Underground is the same.
- The radiological content of a 72B waste canister (80 PE-Ci minimum) bounds the radiological content of a facility canister (60 PE-Ci max).

- The potential consequences identified for the 72B cask processing (RH3, RH4-A, and RH4-B) apply to the 10-160B cask processing.
- The potential consequences of a LOC in the Transfer Cell and a LOC underground for the waste drums from a 10-160B are significant radioactive materials release.

Preventive and Mitigative Features - General preventive and mitigative measures identified in the HAZOP[56] for this specific scenario are listed in Table 5.1-10.

Estimated Frequency - The 10-160B HAZOP[56] does not rank the frequency of the NC4. The Transfer Cell and underground processing of a facility canister is equivalent to processing a 72B canister with frequencies identified in RH3, RH4-A and RH4-B. The scenario frequencies developed for the events in the 72B canister processing are applicable to the facility canister processing.

Loss of Confinement in the Transfer Cell

The frequency of the LOC in the Transfer Cell accident (13ABCD-1 and 14ACDEFGHI-1) is the same as RH3 which has been determined to be in the "beyond extremely unlikely" frequency bin (10^{-6}/yr $\geq$ frequency).

Loss of Confinement Underground

LOC in the underground has been broken down into two events: LOC due to waste hoist failure (15ABCD-1) and LOC occurring during waste movement (16ABCD-1 and 17ABCD-1). The frequency of the LOC due to waste hoist failure is the same as RH4-A and has been determined to be in the "beyond extremely unlikely" frequency bin (10^{-6}/yr $\geq$ frequency), while the frequency of the LOC underground (waste movement) accident is the same as RH4-B and has been determined to be in the "unlikely" frequency bin (10^{-2}/yr $\geq$ frequency > 10^{-4}/yr).

Source Term Development - The source terms developed for the 72B canister RH3, RH4-A, and RH4-B accidents are applicable to the 10-160B cask operations.

Estimated Noninvolved Worker and MEI Consequences and Comparison to Risk Evaluation Guidelines - The consequence analysis terms developed for the RH3, RH4-A, and RH4-B accidents are applicable to facility canister operations. 10-160B accident consequence analysis is bounded by the 72B consequence analysis and a separate consequence analysis is not developed.

Assessment of Immediate Worker Consequences - No specific consequence analysis is performed for NC4 because the consequence analysis terms developed for the RH3 and RH4-B accidents are applicable to the facility canister operations. There is no Immediate Worker in the Transfer Cell and since the immediate worker consequence analysis developed for the RH4-B bounds the 10-160B accident consequence analysis, a separate immediate worker consequence analysis is not developed.

Safety Structures, Systems, and Components - The source terms developed for the 72B canister for RH3, RH4-A, and RH4-B accidents are applicable to the 10-160B cask operations. The data and assumptions developed in the 72B canister RH3, RH4-A, and RH4-B accidents are applicable to the 10-160B cask operations.

The defense-in-depth SSCs which are applicable to this scenario, per the criteria in Chapter 3, Section 3.1.3 are assigned as follows:

- Vented DOT Type A waste drum - Primary Confinement
- Facility canister - Secondary Confinement
- WHB Ventilation System - Tertiary Confinement
- Facility cask - Tertiary Confinement
- Transfer Cell - Tertiary Confinement
- Underground Ventilation System - Tertiary Confinement

5.2.3.14 NC5 Explosion Followed by Fire in the Hot Cell

Scenario Description - The HAZOP[56] for the 10-160B cask operations postulated a waste drum breach from an explosion and a subsequent fire in the Hot Cell. The HAZOP[56] postulated two hazardous events (9-2 and 11D-2) that could result in a explosion and a subsequent fire in the Hot Cell which could cause a significant release of radioactivity.

Hazardous event 9-2 postulated an explosion and a subsequent fire in the Hot Cell which could breach a drum or multiple drums. The fire or explosion is postulated to occur at the point in the process when the waste drums have been removed from the 10-160B cask and are placed in the Hot Cell for processing and storage until they are placed in a facility canister. The possible cause of the explosion is ignition (metal to metal contact causes a spark) of flammable gas generated in the drum.

At the time the 10-160B HAZOP[56] was performed, the design of the facility canister required the lid to be welded to the canister body. The canister design was changed so that the lid mechanically locks to the canister body and welding is no longer performed. Hazardous event 11D-2 postulated an explosion in the Hot Cell which could breach a drum releasing contamination. The explosion is postulated to occur during the welding of facility canister lid to the canister body by a robotic welder. The possible cause of the explosion is ignition of flammable headspace gases in the facility canister during welding. Since welding will not occur in the Hot Cell, this event is not developed.

Preventive and Mitigative Features - General preventive and mitigative measures identified in the HAZOP[56] process for this specific scenario are listed in Table 5.1-10.

Estimated Frequency - The HAZOP Team qualitatively estimated the frequency of occurrence of an explosion followed by fire in the Hot Cell to be in the anticipated range ($10^{-1} \geq$ frequency$>10^{-2}$). The frequency of hazardous event 9-2 is not calculated because a spark induced explosion can not occur in the Hot Cell for the following reasons:

- 10-160B waste drum are packaged to WAC requirements. The WAC does not allow flammable items in waste drums and limits the gas generation rate on the waste in the drums.
- 10-160B waste drums are vented Type A drums. The vent filters will allow gases within the drum to escape into the Hot Cell volume where the Hot Cell ventilation flow, which has a higher flow rate than the drum's gas generation rate, will quickly diffuse and dilute the flammable gases such that if a spark did occur, the required fuel/ air mixture to initiate an explosion or ignite a fire would not be present.

- During waste processing in the Hot Cell, any sparks generated from the waste handling equipment and a drum (metal to metal contact) would occur external to the drum and would not have the energy to penetrate the drum lid or vent filter to ignite the flammable gases in the drum headspace. If the vent filter was not present, then flammable drum gases would not accumulate.

Source Term Development - Considering hazardous event 9-2 cannot occur there will be no release of radioactivity.

5.2.3.15 NC6 Fire Followed by Explosion in the Underground

According to Section 5.2.3.6 (RH5), the fire followed by explosion in the underground that causes a release of hazardous materials from the facility cask or from a 72B canister is not credible. Therefore, a fire followed by explosion during processing of the waste from a 10-160B cask in the facility cask or facility canister would not cause a release of hazardous materials. The design features and controls credited in RH5 will be applicable to the processing of 10-160B cask waste.

5.2.3.16 NC7 Seismic Event

Scenario Description - The HAZOP[56] for the 10-160B RH operations postulated a LOC in the RH Bay due to a seismic event (20-1) that could lead to a breach of a drum or multiple drums. Hazardous event 20-1 postulates a seismic event that occurs during the period of time that the 10-160B cask lid is loose that causes a breach of one or more waste drums.

The HAZOP[56] for the 10-160B RH operations also postulated a full facility fire that involves the Hot Cell or other RH facilities and which could cause a breach of one or more waste drums. Hazardous event 20-2 postulates a full facility fire that causes the breach of one or more waste drums. The possible cause of the fire is an earthquake.

Preventative and Mitigative Features - General preventative and mitigative measures identified in the HAZOP process for this specific scenario are listed in Table 5.1-10.

Estimated Frequency - The HAZOP[56] for 10-160B RH operations ranked the frequency of a DBE event as "unlikely" (10^{-2}/yr $\geq$ frequency > 10^{-4}/yr). The DBE is based on a 1,000 year return interval. The frequency of the DBE event is 1E-3 per year and the frequency bin is "unlikely".

The HAZOP[56] ranked the likelihood of the hazardous event Full Facility Fire as "unlikely" (10^{-2}/yr $\geq$ frequency > 10^{-4}/yr). However, this event postulates a fire involving the entire RH facility resulting from a DBE. The conditional probability of a fire resulting from the DBE ranges from about 3E-02 to 3E-03, depending on the specific structure design and the intensity of the seismic event[57]. The frequency of a fire resulting from a DBE is in the range of 3E-05 to 3E-06 per year or the "extremely unlikely" range (10^{-4}/yr $\geq$ frequency.> 10^{-6}/yr).

Additionally, the waste may be in several areas of the RH facility at the time of the earthquake and fire. The RH bay can contain up to two 10-160B casks. The WHB and the RH bay crane are seismically qualified to survive a DBE. Therefore, the 10-160B casks in the RH bay would not be damaged by falling structures. The 10-160B casks should remain intact during any realistic fire that resulted from the DBE. The waste drums in the road casks would be protected from the effects of a fire that resulted from the DBE as long as the cask was intact and sealed. The drums would only be at risk from the fire during the period of time the cask is being transferred to the CUR by the RCTC with its lid un-bolted. The DBE could dislodge the un-bolted lid and expose the drums to the effects of a seismically induced fire.

However, for this scenario to occur, the seismic event would have to happen only during the time period when the 10-160B cask is being transferred with the lid un-bolted. Even with the lid un-bolted, the cask would still limit the impact of the fire on the waste drums. Based on these facts, the scenario of a DBE caused fire occurring during the time period the 10-160B cask lid is un-bolted and results in the release of hazardous material is considered incredible.

Waste drums may also be present in the Transfer Cell in a facility canister. However, a facility canister would also protect these drums from the effect of a fire and the Transfer Cell is qualified to withstand a DBE. The Hot Cell is also DBE qualified. The only way in which a fire could involve a larger material at risk than that analyzed for the previous events would be for a fire to originate in one area (the RH Bay, the CUR, the Hot Cell, or the Transfer Cell) and then propagate to another area. The design of the WHB and the operation of the RH system makes this highly unlikely. The RH Bay is separated from the CUR by a steel door that is closed if a 10-160B is in the CUR. This door would prevent a fire from spreading from the RH Bay to the CUR and vice versa. Secondly, the CUR is separated from the Hot Cell by shield plugs and thick concrete walls. If the shield plug is not in place, procedures require the CUR door to be closed. Due to its construction, a fire originating in the Hot Cell could not propagate to the RH Bay through the CUR and vice versa. Finally, the Transfer Cell and Hot Cell are separated by a shield valve that is opened only when a facility canister is being lowered into the Transfer Cell. Once a facility canister is loaded in the shuttle car, the shield valve is closed. A fire originating in the Transfer Cell would not propagate to the Hot Cell and vice versa. Based on these facts, it is incredible for a fire to involve multiple areas of the RH system.

Source Term Development - A DBE that results in a full facility fire is incredible and a source term is not developed. A DBE that results in a fire in the RH Bay during transfer of a 10-160B cask to the CUR is also considered to be incredible and a source term is not developed. A DBE by itself has limited potential to result in the release of hazardous material. This assessment of the potential releases is based on the following facts:

- The WHB including the RH Bay, the Hot Cell, and Transfer Cell is DBE qualified [58]. The WHB and its structures and equipment will not fail during a DBE and impact a 10-160B cask, waste drums, or a facility canister.
- The 140/25-ton crane in the RH Bay is DBE qualified. The crane will not fail during a DBE and impact a 10-160B cask in the RH Bay nor will it drop a load onto the cask.
- The Hot Cell crane and the PAR Manipulator are DBE qualified . The Hot Cell crane and PAR Manipulator will not fail or drop a load during a DBE and impact a 10-160B cask, waste drum or facility canister.
- The Transfer Cell Shuttle Car is DBE qualified. The Transfer Cell Shuttle Car will not drop or otherwise impact the integrity of a facility canister in the Transfer Cell during a DBE.
- Fires starting in the Support Building, the WHB, or Building 412 has the potential to destroy the entire structure. This potential fire was analyzed in the FHA[48] and the frequency was found to be beyond extremely unlikely. The potential for a full facility fire is very low due to the low combustible loading in the WHB, the combustible material control program, and relatively few ignition sources.

Based on the above information and a review of the processing steps involved in 10-160B operations, the most vulnerable step in the process from the standpoint of the release of hazardous material due to a DBE is during movement of the 10-160B from the RH Bay into the CUR. During this process, the 10-160B is

on the RCTC with its lid un-bolted but still in place. A DBE occurring at this point in the process could dislodge the 10-160B cask lid such that it impacts and damages the waste drums inside.

Figure 4.2-5 provides the general layout of the 10-160B cask. The cask lid is attached by bolts to the top of the 5.5 inch thick outer wall and is the same diameter as the outer dimensions of the cask wall. The cask lid has a three inch thickness inside the cask that mates up with the inner wall of the cask. For the unbolted cask lid to slide during a DBE, the kinetic energy imparted to lid would have to lift the 7,450 lb lid three inches. Additionally, two lift lugs are located 180 degrees from each other with a one inch side clearance to the lid and act to inhibit lid motion during a seismic event. In the event the cask lid was lifted up and could slide on top of the cask, the larger diameter of the cask lid would preclude the lid from falling in on the waste drums inside the cask.

Further assurance that the event is incredible is obtained by examining the magnitude of the DBE. As discussed in Section 2.5.5, the geologic and seismic assumptions leading to the 1000 year peak acceleration include the consideration of a Richter magnitude 5.5 earthquake at the site, a 6.0 magnitude earthquake on the Central Basin Platform, and a 7.8 magnitude earthquake in the Basin and Range subregion. These magnitudes correspond roughly to equivalent epicentral intensity events of VII, VIII and XI on the Modified Mercalli Intensity scale[69]. These values, especially the first two, are considered quite conservative, and the other parameters used in the 0.075g derivation are also very conservatively chosen. For additional conservatism, a peak design acceleration of 0.1g is selected for the WIPP facility DBE. Bolt[69] correlates average peak acceleration to the Modified Mercalli intensity scale level. The acceleration of 0.1g corresponds to the average peak acceleration range of 0.1 - 0.15g range for Modified Mercalli Intensity scale[69] value of VII.

Table 2.5-2 provides the following description for the Modified Mercalli Intensity Scale[69] Value of VII. Because of the weight and configuration of the lid, the unbolted lid would act as an integral part of the 10-160B cask and would not slide off the cask at this earthquake intensity. Therefore, the event is considered to be incredible.

No hazardous material is postulated to be released during a DBE because to the design features described above, therefore, no source term is developed.

Estimated Consequence and Comparison to Risk Evaluation Guidelines - No hazardous material is postulated to be released during the DBE, therefore, no consequence analysis is developed.

Safety Structures, Systems, and Components - No hazardous material is postulated to be released during the DBE, therefore, Safety Class or Safety Significant SSCs are not required. The defense-in-depth SSC applicable to the NC7 scenario, per the criteria in Section 3.1.3 is the DOT Type A waste drums, Primary Confinement.

5.2.3.17 NC8 Tornado Event

Scenario Description - The HAZOP[56] postulated a LOC in the RH Bay due to a tornado that could lead to a breach of a drum or multiple drums. Hazardous event 20-3 postulates a tornado that occurs during the period of time that the 10-160B cask lid is loose that causes a breach of one or more waste drums.

The potential consequences of the tornado event are: breach of drums due to loose cask lid in RH Bay, onsite/offsite consequences, facility worker exposure, disruption of processing operations, loss of site utilities, worker injury or fatality, fire, explosion, breach of drums in Hot Cell.

Preventative and Mitigative Features - General preventative and mitigative measures identified in the HAZOP for this specific scenario are listed in Table 5.1-10.

Estimated Frequency - The HAZOP[56] ranked the frequency of a design basis tornado (DBT) event as "anticipated"($10^{-1} \geq f > 10^{-2}$). However, the DBT is based on a 1,000,000 year return interval, making the frequency of the DBT event 1 x 10^{-6} per year and the frequency bin of "extremely unlikely" (10^{-4}/yr $\geq f > 10^{-6}$/yr).

Source Term Development - A DBT event has limited potential to result in the release of hazardous material. This assessment of the potential releases is based on the following facts:

- The WHB, including the RH Bay and transfer complex (CUR, Hot Cell, Transfer Cell, and Facility Cask Loading room), is DBT qualified.[58] Therefore, the WHB and its tornado doors will protect the equipment and structures inside the WHB from the effects of a tornado that could potentially result in release of hazardous material.
- All tornado doors are closed at all times when RH waste is present in RH side of WHB.
- The 10-160B cask is DOT Type B qualified. Therefore, the 10-160B cask will withstand the effects of high wind and missiles generated by a tornado without the release of the contained material.

Based on the above information and a review of the processing steps involved in 10-160B operations, there is no identified, credible scenario in which the waste drums from a 10-160B cask are vulnerable to damage and the release of radiological or hazardous chemical material. Therefore, since no hazardous material is postulated to be released as the result of a DBT event, source term development and analysis is not required.

Estimated Noninvolved Worker and MEI Consequences and Comparison to Risk Evaluation Guidelines - No hazardous material is postulated to be released as the result of the DBT, therefore, consequence analysis is not required.

Assessment of Immediate Worker Consequences - No hazardous material is postulated to be released as the result of the DBT, therefore, consequence analysis is not required.

Safety, Structures, Systems, and Components - No hazardous material is postulated to be releases during the DBT, therefore, Safety Class or Safety Significant SSCs are not required. The following input data and assumptions are used in the analysis:

- All tornado doors are closed at all times when RH waste is present in RH side of WHB.
- The WHB is DBT qualified.
- The Hot Cell is DBT qualified.

The defense-in-depth SSCs which are applicable to this scenario, per the criteria provided in Section 3.1.3 are assigned as follows:

- DOT Type A Waste Drums - Primary Confinement
- DOT Type B 10-160B cask - Secondary Confinement
- WHB structure (includes the structure and structural components including the cranes and grapple hoist used for RH waste handling) designed to prevent failure during a DBT resulting in loss of secondary confinement

5.2.4 Assessment of WIPP RH Facility Design Basis and Waste Acceptance Criteria

5.2.4.1 Assessment of WIPP RH Facility Design Basis

As shown in Section 5.2.3, the quantitative frequency analysis for each operational accident produced the following grouping of accidents:

Anticipated Range (10^{-1}/year $\geq$ frequency>10^{-2}/year)

RH2, Fire in the WHB (hydraulic fire in the Facility Cask Loading room

Unlikely Range (10^{-2}/year $\geq$ frequency>10^{-4}/year)

RH4-B, LOC in the Underground (waste movement)

NC3-A, LOC in the WHB (dropped object on waste material in Hot Cell)

NC3-B, LOC in the WHB (dropped object on waste material outside Hot Cell)

NC3-C, LOC in the WHB (dropped drum or facility canister in Hot Cell)

NC3-D, LOC in the WHB (dropped drum or facility canister outside Hot Cell)

NC3-E, LOC in the WHB (puncture of drum in Hot Cell)

NC3-F, (hazardous event 12E-3) LOC in the WHB (puncture of drum or facility canister outside Hot Cell)

NC4, LOC in the Underground (waste movement)(same as and bounded by RH4-B)

Extremely Unlikely Range (10^{-4}/year $\geq$ frequency >10^{-6}/year)

NC1, Fire in the Hot Cell

Beyond Extremely Unlikely Range (10^{-6}/year $\geq$ frequency)

RH1, Fire in the Underground

RH3, LOC in the WHB

RH4-A, LOC in the Underground (waste hoist failure)

RH5, Fire Followed by Explosion in the Underground

NC2, Fire in the Underground (same as and bounded by RH1)

NC3-C, (hazardous events 10B-1) LOC in the WHB (dropped drum or canister in Hot Cell)

NC3-F, (hazardous events 12E-2, 12E-4 and 14B-1) LOC in the WHB (puncture of drum or canister outside Hot Cell)

NC3-G, LOC in the WHB (puncture of 10-160B cask in RH Bay)

NC3-H, LOC in the WHB (dropped 10-160B cask in RH Bay)

NC4, LOC in the Transfer Cell or Underground (waste hoist failure and Transfer Cell)(same as and bounded by RH3 and RH4-A)

NC6, Fire followed by explosion in the Underground (same as and bounded by RH5)

Releases of hazardous material as the result of accidents NC2 and NC6 were found to be incredible for 10-160B cask processing as long as the inputs and assumptions determined to be applicable to these events in the 72B RH accident analysis are maintained for the 10-160B cask processing. Releases of hazardous material as the result of accident NC8 were found to be incredible for 10-160B cask processing as long as the inputs and assumptions listed in Section 5.3 are maintained.

For all accidents, the quantitative frequency analysis has verified that the qualitative frequency ranges assigned for these scenarios in the HAZOP were either correctly or conservatively assigned.

Additional quantitative frequency analyses in the form of event/fault tree analyses were performed to identify SSCs, or processes that contribute most to the accident phenomena frequency for the purposes of verifying their adequacy or identifying improvements to reduce the accident frequency and therefore risk to immediate workers (as well as noninvolved worker and MEI). Specific accidents evaluated in this manner were: RH3, RH4A, RH4B, RH6, RH7, NC1, NC3 (A-G), and NC5. With the exceptions of RH4B, RH6, NC1, and NC3(A - F), the event tree/fault tree analyses indicated that the no-mitigation frequency of the identified accidents occurring are beyond extremely unlikely (frequency ≤ 1E-06/yr).

Accident Analysis Consequence Results

Based on the 72-B cask RH accident source term and release mechanism analyses presented in Section 5.2.3, for worst-case scenarios with a frequency greater than 1E-06/yr, the calculated worst-case no-mitigation accident consequences to the noninvolved worker and MEI, were found to be well below the selected accident risk evaluation guidelines for the unlikely range and for the immediate worker below the guidelines for the extremely unlikely range. The highest consequences are obtained from RH4-B (Table E-8 of Appendix E), with an estimated 0.6 rem (6 mSv) to the noninvolved worker (approximately 2 percent of 25 rem (250 mSv) guideline), 0.05 rem (.5 mSv) to the MEI (approximately 0.7 percent of 6.5 rem (65 mSv) guideline), and (Table E-14 of Appendix E) 5.4 rem (54 mSv), (approximately 5 percent of 100 rem (1 Sv) guideline) to the immediate worker.

Based on the 10-160B cask processing accident source term and release mechanism analyses presented in Section 5.2.3, for worst-case scenarios with a frequency greater than 1E-06/yr and for which the release of hazardous material was credible, the calculated worst-case no-mitigation accident consequences to the noninvolved worker and MEI, and immediate worker were found to be well below the selected accident risk evaluation guidelines for the appropriate frequency range. The highest consequences are obtained from NC1 (Table E-19 of Appendix E), with an estimated 8.2 rem (82 mSv) to the noninvolved worker (approximately 8 percent of the 100 rem (1 Sv) guideline) and 0.65 rem

(6.5 mSv) to the MEI (approximately 3 percent of the 25 rem (250 mSv) guideline). The highest consequences to the immediate worker are obtained from NC3-G, and NC3-H (Table E-48 and E-49 respectively) with an estimated immediate worker consequence of 4.13 rem (41.3 mSv), (approximately 17 percent of the 25 rem (250 mSv) guideline)

It should be noted that the MEI unmitigated consequences for credible, worst-case scenarios with a frequency greater than 1E-06/yr (NC1, NC3), is about 1.3 times the 500 mrem (5 mSv) temporary annual dose limit for normal operations derived from DOE Order 5400.5, and (2) the noninvolved worker consequences are about 1.5 times the 5 rem (50 mSv) annual dose limit for workers for normal operations.

No current risk evaluation guidelines exist for the assessment of accident consequences to immediate workers. Therefore, in the absence of guidelines, and for conservatism, the noninvolved worker radiological guidelines were used as a reference point for the assessment of consequences to immediate workers and the evaluation of the adequacy of the WIPP defense-in-depth features. The consequences to the immediate worker from NC3-G and NC3-H are also well within the on-site risk evaluation guidelines. Therefore, no specific additional worker protection, engineering, or administrative controls (such as respiratory protection, more stringent maximum waste canister inventory, or additional 10-160B cask WAC controls such as immobilization) beyond those already qualitatively identified as providing defense-in-depth for the immediate worker, are needed based on the quantitative consequence assessment results.

For credible scenarios with a frequency less than 1E-06/yr, the calculated unmitigated accident consequences to the noninvolved worker, and MEI were also found to be below the selected accident risk evaluation guidelines. The highest consequences are obtained from NC3-F (Table E-43 of Appendix E), with an estimated 2.47 rem (24.7 mSv) to the noninvolved worker (approximately 2 percent of the 100 rem (1 Sv) guideline) and 0.19 rem (1.9 mSv) to the MEI (less than 1 percent of 25 rem (250 mSv) guideline). No immediate worker in the Hot Cell.

It should be noted that the MEI no-mitigation consequences for all 10-160B waste handling accidents analyzed, regardless of frequency, were found to be below 25 rem (250 mSv) risk evaluation guideline. The worst-case for the 10-160B analysis calculated dose to an immediate worker is from NC3-G and NC3-H with an estimated 4.13 rem (41.3 mSv). This immediate worker dose is well below the on-site risk evaluation guidelines for the unlikely range.

For the 72-B cask, the MEI unmitigated consequences for worst-case scenarios with a frequency greater than 1E-06/yr (RH4-B), is about 11 percent of 500 mrem (5 mSv) temporary annual dose limit for normal operations derived from DOE Order 5400.5, and (2) the noninvolved worker consequences are about twelve percent of the 5 rem (50 mSv) annual dose limit for workers for normal operations.

The worst-case 72-B cask consequences to the immediate worker from RH4-A are estimated to be 116 rem (1.6Sv). No current risk evaluation guidelines exist for the assessment of accident consequences to immediate workers. Therefore, in the absence of guidelines, and for conservatism, the noninvolved worker radiological guidelines for the extremely unlikely rang were used as a reference point for the assessment of consequences to immediate workers and the evaluation of the adequacy of the WIPP defense-in-depth features. The consequences to the immediate worker from RH4-A exceed the site risk evaluation guidelines. For protection of the immediate worker, the waste hoist brake system is designated Safety Significant and specific Administrative controls are derived in Chapter 6 and assigned in Attachment 1, Preliminary Technical Safety Requirements. The risk associated with this potential exposure is deemed acceptable for the following reasons:

- The conservatism in the risk evaluation guidelines as discussed in Section 5.2.2, as well as the application of the on-site guidelines to the immediate worker,
- The very low frequency of this scenario, primarily due to the design changes which significantly enhance the system safety and reliability. As identified in EEG-59,[43] the performance of preoperational tests are of paramount importance to system reliability (for the waste hoist, as well as other WIPP SSCs), and as such, is a primary element of the first layer of WIPP defense-in-depth. Section 8.3.3.5 discusses the elements of preoperational checks as required by the conduct of operations program, and a TSR AC is derived in Chapter 6 for inclusion in the WIPP Technical Safety Requirements,
- The conservatism inherent in all of the accident analysis source term variables used to estimate the above consequences,
- The existing elements for protection of the worker discussed in detail in Section 5.1.7.

It should be noted that the MEI (exclusive use area) no-mitigation consequences for all 72B waste handling accidents analyzed, regardless of frequency, were found to be well below 25 rem (250 mSv) risk evaluation guideline.

For 72-B cask scenarios, resulting in a release, with a frequency less than 1E-06/yr (RH3, RH4-A, RH5), the calculated unmitigated accident consequences to the noninvolved worker, and MEI were also found to be below the selected accident risk evaluation guidelines. The highest consequences are obtained from RH3, with an estimated 65.8 rem (658 mSv) to the noninvolved worker (approximately 66 percent of 100 rem (1 Sv) guideline), 5.2 rem (52 mSv) to the MEI (approximately 21 percent of 25 rem (250 mSv) guideline), and 116 rem (1.16 Sv) RH4-A, (approximately 116 percent of 100 rem guideline) to the immediate worker.

Evaluation of the Design Basis

For the purposed of establishing safety (safety-class or safety-significant) preventative and mitigative SSCs, an iterative process is performed. The safety (safety-class or safety-significant) iterative process involves comparing the "no-mitigation" accident consequences to the MEI and noninvolved worker (with associated "no-mitigation" accident frequency from the event tree analyses in Appendix D) to the off-site and on-site risk evaluation guidelines respectively. The process is continued taking credit for additional preventative/mitigative SSCs until the risk evaluation guidelines are met. Systems required to keep estimated consequences below the risk evaluation guidelines are designated as safety (safety-class or safety-significant) SSCs.

The accident analyses indicate that Design Class I (Safety Class) SSCs are not required for the WIPP to mitigate any MEI accident radiological and non-radiological consequence to below risk evaluation guideline levels. Secondary confinement is required to remain functional (following DBAs) to the extent that the guidelines in DOE Order O 420.1,[51] Section 4.1.1.2, Design Requirements, are not violated. The risk evaluation guidelines developed in this safety analysis report were used in the absence of definitive criteria DOE safety analysis orders or guidance documents for evaluation of secondary confinement. As previously stated, the MEI and noninvolved worker unmitigated consequences were found to be well below the selected risk evaluation guidelines, including accidents whose frequency is <1E-06/yr, and as such, secondary confinement is not required. However, existing Design Class II and IIIA secondary confinement SSCs, while not required to mitigate the consequences of an accident from exceeding the risk evaluation guidelines, support the second layer of the WIPP defense-in-depth philosophy.

As discussed in the accident scenarios in Section 5.2.3, there is no credible physical mechanism by which the accidents occurring in the WHB or the Underground will disable the respective ventilation or HEPA filtration systems. No releases are postulated requiring ventilation or HEPA filtration for the DBE and DBT scenarios. If a waste drum or canister breach occurs in the WHB during an operational accident, the release to the outside environment is mitigated by the permanently installed continuously on-line two-stage HEPA filter. For credible accident scenarios in the Underground (RH4-B and NC4), shift of the underground ventilation system may occur manually (it is assumed the CMR operator will be notified or be aware of the accident and actuate the shift to filtration), or automatically. No release scenarios are expected to be initiated during a DBE or DBT, primarily due to the DBE/DBT design of the WHB structure including tornado doors and specific waste handling equipment such as the WHB 6.25-ton grapple hoist and waste hoist. The WHB ventilation and filtration systems are not required to mitigate the consequences of the DBE or DBT scenarios.

Based on criteria in Chapter 3, Section 3.1.3.2, the factors that lead to designation of a component as Safety Significant are:

- SSCs whose preventive or mitigative function is necessary to keep hazardous material exposure to the noninvolved worker below on-site risk evaluation guidelines,
- SSCs that prevent acute worker fatality or serious injury from hazardous material release that is outside the protection of standard industrial practice, OSHA regulation, or MSHA safety regulation (e.g. potentially explosive waste containers).

As concluded from the Section 5.2, none of the analyzed scenarios (all scenarios are analyzed without regard for occurrence frequency) resulted in noninvolved worker consequences exceeding the risk evaluation guidelines. Therefore, there are no SSCs that are considered Safety Significant due to need to prevent or mitigate noninvolved worker consequence.

The 72-B HAZOP identified sixteen potential scenarios and the 10-160B HAZOP identified nine potential scenarios related to WIPP RH waste handling operations, that could result in worker fatality with no radiological release. They were identified as industrial hazards with no radiological release and will be covered under the WIPP's Operational Safety programs (Chapter 8). The 72-B HAZOP identified twelve potential scenarios and the 10-160B HAZOP identified five potential scenarios that could result in worker fatality and radiological release. Both HAZOPs identified one potential scenario that could result in worker fatality, waste hoist failure while transporting personnel. This event was evaluated in section 5.2.3.4. Personnel and waste containers will not be transported simultaneously. Failure of the waste hoist while transporting personnel does not constitute a process related accident involving radioactive materials and as such is considered a standard industrial hazard associated with standard mining operations. Hoisting operations are required to comply with the requirements of 30 CFR 57 and the New Mexico Safety Code for all Mines. For protection of the immediate worker, the waste hoist brake system is designated Safety Significant and specific Administrative Controls are derived in Chapter 6 and assigned in Attachment 1, Technical Safety Requirements.

Specific SSCs that fulfill a defense-in-depth safety function are: (1) the waste handling equipment such as the WHB 6.25-ton grapple hoist, diesel forklifts, Horizontal Emplacement and Retrieval Equipment (HERE), facility cask rotating device, waste-hoist, 140/25 ton crane, Hot Cell crane, PAR manipulator and (2) WIPP confinement SSCs including waste canisters and drums, 72-B cask, 10-160B cask, facility canister and facility cask, WHB and Underground structure, and WHB and Underground ventilation and filtration systems. With regard to waste handling equipment, in each instance their reliability and functionality are important to the prevention of damage to the waste containers (first layer of defense in depth). As such, their designation as defense-in-depth SSCs ensures that they are designed, maintained,

and operated to prevent failure resulting in an accident. WIPP confinement SSCs (WHB and Underground ventilation and filtration systems, and WHB and Underground structure) support the second layer of defense-in-depth. All other WIPP SSCs are considered as balance of plant.

Specific WIPP SSCs are classified as defense-in-depth SSCs, based on the above functional classification results. Rather than the WIPP SAR specify functional requirements and performance criteria for those defense-in-depth SSCs, the applicable SDDs describe their intended safety functions, and specify the requirements for design, operation, maintenance, testing, and calibration.

As discussed in detail in Chapter 6, based on application of the criteria in 10 CFR 830.205 [52] for the selection of safety and operational limits, and the fact that Safety Class SSCs are not selected for WIPP, TSR Safety Limits (SLs), Limiting Conditions for Operation (LCOs), and Surveillance Requirements are not required. TSR ACs assigned for features discussed above that play a role in supporting the WIPP defense-in-depth approach are derived in Chapter 6. 10 CFR 830.205 and its implementation guide allow coverage of Safety Significant SSCs through Administrative Controls. Table 6-1 provides a summary of defense-in-depth safety features and applicable TSR controls.

Based on the fact that TSR Operational Limits and Surveillance Requirements are not defined for WIPP, operability definitions for Defense-in-Depth SSCs are not required in the SAR. SSCs are required in the TSR to be operated as required during each facility mode as described in Table 6-2, to support the overall WIPP defense-in-depth strategy.

Evaluation of Human Factors

A systematic inquiry of the importance to safety of reliable, correct, and effective human-machine interactions, considering the mission of the WIPP facility and the physical nature of the radioactive wastes that it will receive was conducted. [70] The specific human errors that can contribute to accidental releases of hazardous materials were evaluated as an integral part of each hypothesized accident. Based on the analysis of those accidents, it can be concluded that the WIPP WAC , facility design, and operational controls provide high confidence that all potential releases can be contained with passive safety features that eliminate the need for human actions requiring sophisticated human-machine interfaces.

To provide additional support for the conclusion that no detailed human factor evaluation of human-machine interfaces is required, a scoping assessment of the effectiveness of the human-machine interfaces that support important design functions of the Table 4.1-1 Design Class II and IIIA systems was performed. It can be seen in Table 4.8-1 that most of the Design Class II and IIIA WIPP systems and equipment do not require human actions to initiate or sustain their function relative to the release of radiological or non-radiological waste materials. In most cases these functions are accomplished with automatic passive mechanisms designed to provide containment for the waste materials.

Functions allocated to automatic passive mechanisms or automatic active systems may be influenced by human error during maintenance. However, using the graded approach, human-machine interfaces for maintenance activities at WIPP are judged to be adequate because they are deliberate, and there is ample opportunity to discover errors and correct them with no adverse safety consequences.

The ability of the staff to accomplish their responsibilities in potential accident environments was evaluated. The limited magnitude of the hazard and the lack of dispersal driving forces provide very high confidence that the staffing and training presented in those sections will enable the staff to perform their responsibilities in potential accident environments.

The magnitude of hazardous materials that can be involved in an accident leading to a release is very limited. The radioactive material is delivered to the site in closed containers, and the waste handling operations are designed to maintain that integrity throughout the entire process required to safely emplace those containers in the site's underground waste disposal rooms. Inventory limits on individual containers ensure that heat generated by radioactive decay can be easily dissipated by passive mechanisms. Finally, only a limited number of waste containers have the possibility of being breached as a result of any one accident initiating event. As a result, the consequences of unmitigated releases from all accidents hypothesized in Chapter 5, including those initiated by human error, do not produce significant offsite health consequences.

The facility has no complex system requirements to maintain an acceptable level of risk. The facility is designed to minimize the presence and impact of other energy sources that could provide the heat or driving force to disperse hazardous materials. When something unusual happens during normal operations, such as support systems becoming unavailable, **waste handling can be simply stopped** and personnel evacuated until an acceptable operating condition is reestablished.

Should an initiating event occur that breaches the waste containers, **the plant design permits the immediate cessation of activity and isolation of the area where the breach occurs.** Once isolation is achieved, there is no driving force within the waste or waste handling area that could result in a release of the waste material. Consequently, **sufficient time is available to thoroughly plan and prepare for the remediation process prior to initiating decontamination and recovery actions.**

Human factors considered in this SAR is limited to that time necessary to properly emplace the transuranic waste designated for disposal at WIPP. The operations will be straightforward, proceduralized, and consistent. Moreover, they will continue for only the period of time needed to complete the disposal process. Once a panel is filled and sealed off, the natural properties of the salt and the location of the mine combine to provide passive isolation of the waste from the environment. The potential for human intrusion after the facility closure is beyond the scope of the human factors evaluation considered here.

Conclusion

It is concluded from the hazards and accident analyses in this SAR that the design basis of the WIPP RH TRU waste handling systems are adequate in response to postulated range of RH TRU normal operations and accident conditions for the facility.

5.2.4.2 Analysis of Beyond the Design Basis Accidents

Operational Events

An evaluation of 72-B cask and 10-160B cask operational accidents "beyond" design basis accident (BDBA) is conducted to provide perspective of the residual risk associated with the operation of the facility. As discussed in DOE-STD-3009-94[1], BDBAs are simply those operational accidents with more severe conditions or equipment failure. Based on the analyses in Section 5.2.3, the operational accident scenario involving potential consequences to the non-involved worker, MEI, and immediate worker, whose frequency is less than 1E-06/yr is RH5, Fire followed by Explosion.

The source term MAR developed in Section 5.2.3 is based on the 72-B waste canister inventory derived in Section 5.1.2.1.2. The analyses assumed that based on the data in Appendix A, that the maximum radionuclide inventory in a 72-B waste canister is 80 PE-Ci for direct loaded waste and 240 PE-Ci for double contained waste. The on-site and off-site risk evaluation guidelines for the extremely unlikely range are used for the consequence evaluation even though the frequency of the BDBA scenarios is beyond extremely unlikely.

The worse case radiological consequences of RH5 are discussed here assuming that waste canister involved in the scenario is at 80 PE-Ci. The same assumptions regarding waste form combustible and noncombustible composition, damage ratio, airborne release fraction (median value instead of bounding), and respirable fraction are assumed. Substitution of these values into the consequence calculations for RH5, indicate doses of approximately 0.6 rem (6 mSv) to the noninvolved worker individual (less than one percent of the 100 rem noninvolved worker risk evaluation guideline for the extremely unlikely range), and 0.05 rem (.5 mSv) (less than one percent of 25 rem MEI risk evaluation guideline for the extremely unlikely range) to the MEI. The noninvolved worker and MEI doses are below their respective risk evaluation guidelines. The estimated 5.4 rem (54 mSv) dose to the immediate worker for the RH5 beyond design basis scenario (Appendix E, Table E-15) does not exceed the noninvolved worker risk evaluation guideline of 100 rem (1 Sv) for the extremely unlikely range. Therefore, no specific additional worker protection engineering or administrative controls are identified. The risk associated with this potential exposure is deemed acceptable for the following reasons:

- The conservatism in the risk evaluation guidelines as discussed in Section 5.2.2, as well as the application of the on-site guidelines to the immediate worker.
- The conservatism inherent in all of the accident analysis source term variables used to estimate the above consequences,
- The existing elements for protection of the worker discussed in detail in Section 5.1.7.

Natural Phenomena

As discussed in Section 3.4.3 of DOE-STD-3009-94[1], natural phenomenon BDBAs are defined by a frequency of occurrence less than that assumed for the DBA. Since the DBT is defined with a 10^{-6}/yr return period, and the DBE as a 10^{-3}/yr return period, the most credible BDBA natural phenomenon event is an earthquake with a vertical ground acceleration of greater than 0.1 g (considered extremely unlikely). DBE SSCs: (1) the WHB structure, and (2) WHB 140/25-ton bridge crane, the CUR 25-ton crane, the Hot Cell crane, and the Facility Cask Loading Room grapple hoist, are assumed to fail resulting in a release of radioactive material.

The source term MAR developed in Section 5.2.3 is based on the 10-160B road cask inventory derived in Section 5.1.2.1.2. The analyses assumed that based on the data in Appendix A, that the maximum radionuclide inventory in a 10-160B road cask is 20 PE-Ci.

It is assumed that the WHB structure fails resulting in the Hot Cell roof collapsing into the Hot Cell which damages 10 waste drums awaiting placement in facility canisters and a partially loaded facility canister. The partially loaded facility canister containing two drums from two different 10-160B casks is in the loading station. Each of the two drums in the facility canister contain the maximum radionuclide inventory of a 10-160B road cask. The total Hot Cell inventory is 60 PE-Ci. It is conservatively assumed that all of the drums and the partially loaded facility canister are breached by the falling Hot Cell roof debris and the Hot Cell crane. The beyond DBE is basically the same accident as described for NC3-F, with the same MAR, waste form combustible and noncombustible composition, airborne release

fraction, and respirable fraction. Using the NC3-F values and a factor of 10 increase in the damage ratio, the consequence calculations for beyond DBE indicate doses of approximately 24.7 rem (247 mSv) to the non-involved worker (approximately 25 percent of the 100 rem non-involved worker risk evaluation guideline for the extremely unlikely range), and 1.9 rem (19 mSv) (approximately 7.6 percent of 25 rem MEI risk evaluation guideline for the extremely unlikely range) to the MEI. The non-involved worker and MEI doses are below the risk evaluation guidelines, respectively. There is no postulated dose to the immediate worker since the event occurs in the Hot Cell which would not be occupied during waste handling operations. Therefore, the radiological risk associated with a greater than 0.1 g earthquake is considered acceptable.

5.2.4.3 Assessment of WIPP Waste Acceptance Criteria (RH WAC)

RH WAC Pu-239 Equivalent Activity Operations and Safety Requirement

Based on the design basis accident analysis results in Section 5.2.3, the estimated radiological consequences for RH4-A, LOC in the Underground (waste hoist failure) to the immediate worker, and NC3, LOC in the WHB, to the noninvolved worker, are approximately equal to and both approach the respective accident risk evaluation guidelines. Therefore, the 80 PE-Ci for direct loaded and 240 PE-Ci for double contained 72B waste canisters and the 20 PE-Ci for the 10-160B cask derived in Section 5.1.2.1.2, are established as the RH WAC Pu-239 Equivalent Activity Operations and Safety maximum allowable waste container radionuclide inventories for RH TRU waste. The establishment of the above waste container radionuclide inventories values, provides a defense-in-depth based approach to ensure that the estimated immediate worker accident consequences from RH TRU waste remain acceptable.

Based on the beyond design basis accident analysis results in Section 5.2.4.2, the estimated radiological consequences for RH5, Fire Followed by and Explosion in the Underground, to the immediate worker, do not exceed the selected accident risk evaluation guidelines. Therefore, no specific additional worker protection engineering or administrative controls are identified. The risk associated with this potential exposure is deemed acceptable for the following reasons:

- The conservatism in the risk evaluation guidelines as discussed in Section 5.2.2, as well as the application of the on-site guidelines to the immediate worker,
- The conservatism inherent in all of the accident analysis source term variables used to estimate the above consequences,
- The existing elements for protection of the worker discussed in detail in Section 5.1.7.

The WIPP RH WAC Thermal Power waste canister requirements, limits the decay heat from all RH-TRU waste to 300 watts per waste canister.

The RH WAC Pu-239 Equivalent Activity Operations and Safety limits, when analyzed in conjunction with conservative safety analysis assumptions, and existing stored waste information: (1) provides a reasonable degree of assurance that the safety envelop of the facility has been defined, and (2) ensures that the risk to immediate workers, noninvolved worker, and the MEI remain well within the risk evaluation guidelines.

References for Section 5.2

1. DOE-STD-3009-94, Preparation Guide for U.S. Department of Energy Nonreactor Nuclear Facility Safety Analysis Reports, Change 1, January 2000.

2. DOE/WIPP 94-026, Waste Isolation Pilot Plant Land Management Implementation Plan, August 1994.

3. DOE/WIPP-91-005, Waste Isolation Pilot Plant RCRA Part B Permit Application, Revision 6, U.S. Department of Energy, Carlsbad, N.M.

4. DOE-HDBK-3010-94, Airborne Release Fractions/Rates and Respirable Fractions for Nonreactor Nuclear Facilities, December 1994 and Change Notice 1, March 2000.

5. DOE/CAO-95-1121, Transuranic Waste Baseline Inventory Report, Rev. 3, June1996.

6. DOE/WIPP-95-2065, Rev.4, Waste Isolation Pilot Plant Safety Analysis Report, December 1999.

7. DOE/RL-96-57, Test and Evaluation Document for DOT Specification 7A Type A packaging.

8. WPS-88-001, Full-Scale Drop-Impact Tests with DOT Specification 7A Waste Containers, Rockwell International, Rocky Flats Plant, December 1988.

9. SAND80-2517, Analysis, Scale Modeling, and Full-Scale Tests of Low-Level Nuclear Waste Drum Response to Accident Environments.

10. MLM-3245, U.S. DOE Evaluation Document for DOT Type A Packaging, EG&G Mound, March 1987.

11. WHC-SD-WM-TRP-231, Drum Drop Test Report, Westinghouse Hanford Corporation, February 1995.

12. PLG-1305, Remote Handled Transuranic Waste Container (RH TWC) Structural Analysis for Postulated Handling Accidents, August 2000.

13. WSMS-WIPP-00-0005, "Explosion in a Drum Evaluated for CH TRU Central Characterization Process," Revision 0, Westinghouse Safety Management Solutions, Aiken, SC, October 2000.

14. ERDA 76-21, Energy Research and Development Administration, Nuclear Air Cleaning Handbook.

15. Nuclear Regulatory Commission Regulatory Guide 1.145, Rev 1, Atmospheric Dispersion Models for the Potential Accident Consequence Assessments at Nuclear Power Plants, United States Nuclear Regulatory Commission, Washington, DC, November 1982.

16. WHC-SD-GN-SWD-30002, GXQ Program Users Guide, Westinghouse Hanford Company, Rev 1., May 1995.

17. WP 02-RP.02, WIPP Site Atmospheric Dispersion Coefficient (X/Q) Calculations, March 2000.

18. ICRP Report No. 23, Report of the Task Group on Reference Man, International Commission on Radiological Protection, Pergamon Press, NY, 1974.

19. DOE/EH-0071, Internal Dose Conversion Factors for Calculation of Dose to the Public, July 1988.

20. Craig, DK et al., Toxic Chemical Hazard Classification and Risk Acceptance Guidelines for the use in DOE Facilities, May 1993.

21. Savannah River Site Generic Data Base Development (U), WSRC-TR-93-262.

22. WP 04-AD3013, Underground Access Control

23. ANSI/ANS-51.1-1983, American National Standards Institute, Standard Nuclear Safety Criteria for the Design of Stationary Pressurized Water Reactor Plants.

24. ANSI/ANS-52.1-1983, American National Standards Institute, Standard Nuclear Safety Criteria for the Design of Stationary Boiling Water Reactor Plants.

25. 10 CFR 835, Occupational Radiation Protection.

26. 10 CFR 100, Reactor Site Criteria.

27. DOE G 151.1-1, Hazards Surveys and Hazards Assessments.

28. WP 02-RP.02, Hazard Analysis Results Report for Remote Handled Waste (RH), Waste Isolation Pilot Plant, July 1999.

29. SDD for Horizontal Emplacement and Retrieval Equipment

30. Material Safety Data Sheet for CITGO A/W Hydraulic Oil 32, CITGO Petroleum Corporation, P. O. Box 3758, Tulsa, Oklahoma 74102, March 1993.

31. Savannah River Site Human Error Data Base Development for Nonreactor Nuclear Facilities (U), WSRC-TR-93-581.

32. Westinghouse Electric Corporation, "Waste Drum Fire Propagation at the Waste Isolation Pilot Plant," DOE/WIPP-87-005, April 1987.

33. Effect of 40-Gallon Hydraulic Fluid Fire on WIPP Facility Cask, WSMS-WIPP-99-0002, Westinghouse Safety Management Solutions LLC, Aiken, SC, May 1999.

34. TRU Waste Container Filter Assembly, Drawing No. H-2-91279.

35. FLAMES, Their Structure, Radiation and Temperature, 3rd edition, by Gaydon, A.G., and Wolfhard, H.G., Published by Chapman and Hall Ltd. London, UK, 1970.

36. WP 12-9, WIPP Emergency Management Program.

37. Facility Cask Rotating Device, Hydraulic Power Unit, Framework and Supports, Drawing No. 412-L-057-W2, Rev. "New", Waste Isolation Pilot Plant, Carlsbad, NM, January 1999.

38. PLG-1317, Waste Isolation Pilot Plant 6.25 Grapple Hoist Fault Tree Analysis

39. Waste Isolation Pilot Plant Canister Transfer System, Design Report 00184.00.WIPP-T-002, Rev. A, February 1999.

40. DOE/WID-96-2178, Rev. 0, Waste Isolation Pilot Plant Waste Hoist Brake System Analysis, July 1996.

41. Dropping the Loaded Facility Cask Transfer Car Down the Waste Shaft, WSMS-WIPP-99-0003, Westinghouse Safety Management Solutions LLC, Aiken, SC, May 1999.

42. WTSD-TME-063, Probability of a Catastrophic Hoist Accident at the Waste Isolation Pilot Plant, July 1985.

43. EEG-59, An Analysis of the Annual Probability of Failure of the Waste Hoist Brake System at the Waste Isolation Pilot Plant, Environmental Evaluation Group, New Mexico, November 1995.

44. Post Seismic Fire Probability for the Consolidated Tritium Facility (U), F-CLC-H-00012, Rev.0, Westinghouse Savannah River Company, Savannah River Site, Aiken, South Carolina, March 1996.

45. Proceedings 1979, RETC, Vol. 1 AIME, Littleton, CO., Earthquake Damage to Underground Facilities, Draft, 1979.

46. UCRL-15910, Design and Evaluation Guidelines for Department of Energy Facilities Subjected to Natural Phenomena Hazards, June 1990.

47. Bechtel Interoffice Memorandum, J.J. Litehiser to H.G. Taylor, DOE Order 6430.1A Review of the WIPP Site, Job No. 20585-001, September 27, 1990.

48. DOE/WIPP-3217, WIPP Fire Hazards Analysis Report, June 2002.

49. Safety Analysis Report for the RH-TRU 72-B Waste Shipping Package, RH-TRU 72-B Cask SAR, Rev. 0, September 1996.

50. SMRP No. 155, A Site-Specific Study of Wind and Tornado Probabilities at the WIPP Site in Southeast New Mexico, Department of Geophysical Sciences, T. Fujita, University of Chicago, February 1978 and its Supplement of August 1978.

51. DOE Order 420.1, Facility Safety.

52. 10 CFR 830.205, Technical Safety Requirements.

53. DOE-STD-3014-96, Accident Analysis for Aircraft Crash into Hazardous Facilities.

54. ITSC-WIPP-2000-01, Revision 0, Estimate of Aircraft Impact Frequency and Consequences at the WIPP, August 2000.

55. Safety Evaluation Report Model CNS 10-160B Package Certificate of Compliance No. 9204, Revision No. 5, U.S. Nuclear Regulatory Commission, May 2000.

56. WSMS-WIPP-00-0006, Hazard and Operability Study for the 10-160B Cask Remote Transuranic Waste Handling System (RH), Waste Isolation Pilot Plant, Westinghouse Safety Management Solutions, January 2001.

57. WSRC-MS-99-00787, "Determination of Risk of Post-Seismic Fires in Collocated Facilities," Westinghouse Savannah River Company, Savannah River Site, Aiken, SC, 1999.

58. System Design Description, SDD General Plant Description.

59. WSMS-WIPP-01-0002, "Above Ground Loss of Confinement Events for 10-160B Cask Processing," Rev. 0, Westinghouse Safety Management Solutions, Aiken SC, May 2001.

60. Solid Waste Drum Storage Flammability Analysis (U), S-CLC-E-00135, Rev. 0, Westinghouse Savannah River Company, Savannah River Site, Aiken, SC, March 2001.

61. Fires and Explosions Evaluated for the 10-160B Cask Remote Transuranic Waste Handling System (RH), WSMS-WIPP-01-0001, Rev. 0, May 2001.

62. Fires Evaluated for CH TRU Central Characterization Process, WSMS-WIPP-00-0004, Rev. 0, October 2000.

63. Mueller, C., et. al., "Analysis of Accident Sequences and Source Terms at Waste Treatment and Storage Facilities for Waste Generated by U. S. Department of Energy Waste Management Operations," ANL/EAD/TM-29, Argonne National Laboratory, December 1996.

64. EEG-74, "Probability of Failure of the TRUDOCK Crane System at the Waste Isolation Pilot Plant (WIPP)," Environmental Evaluation Group, New Mexico, May 2000.

65. Certificate of Compliance No. 9204 for Model CNS-10-160B Shipping Cask, Rev. 5.

66. SAR for Model CNS-10-160B Type B Shipping Cask, Rev. 16, Nov 2000, Chem-Nuclear Systems, LLC.

67. Letter from Richard Behnke, FANUC ROBOTICS to Rod Palanca, Subject: Cask Integrity, May 26, 2000.

68. Beck, M., "Cask Tipover Evaluated for the 10-160B Cask Processing," WSMS-WIPP-01-0006, Revision 0, August 2001.

69. Bolt, Bruce A. Abridged Modified Mercalli Intensity Scale, *Earthquakes - Newly Revised and Expanded*, Appendix C, W.H. Freeman and Co. 1993.

70. WP 02-RP.03, Waste Isolation Pilot Plant Human Factors Evaluation, May 2002.

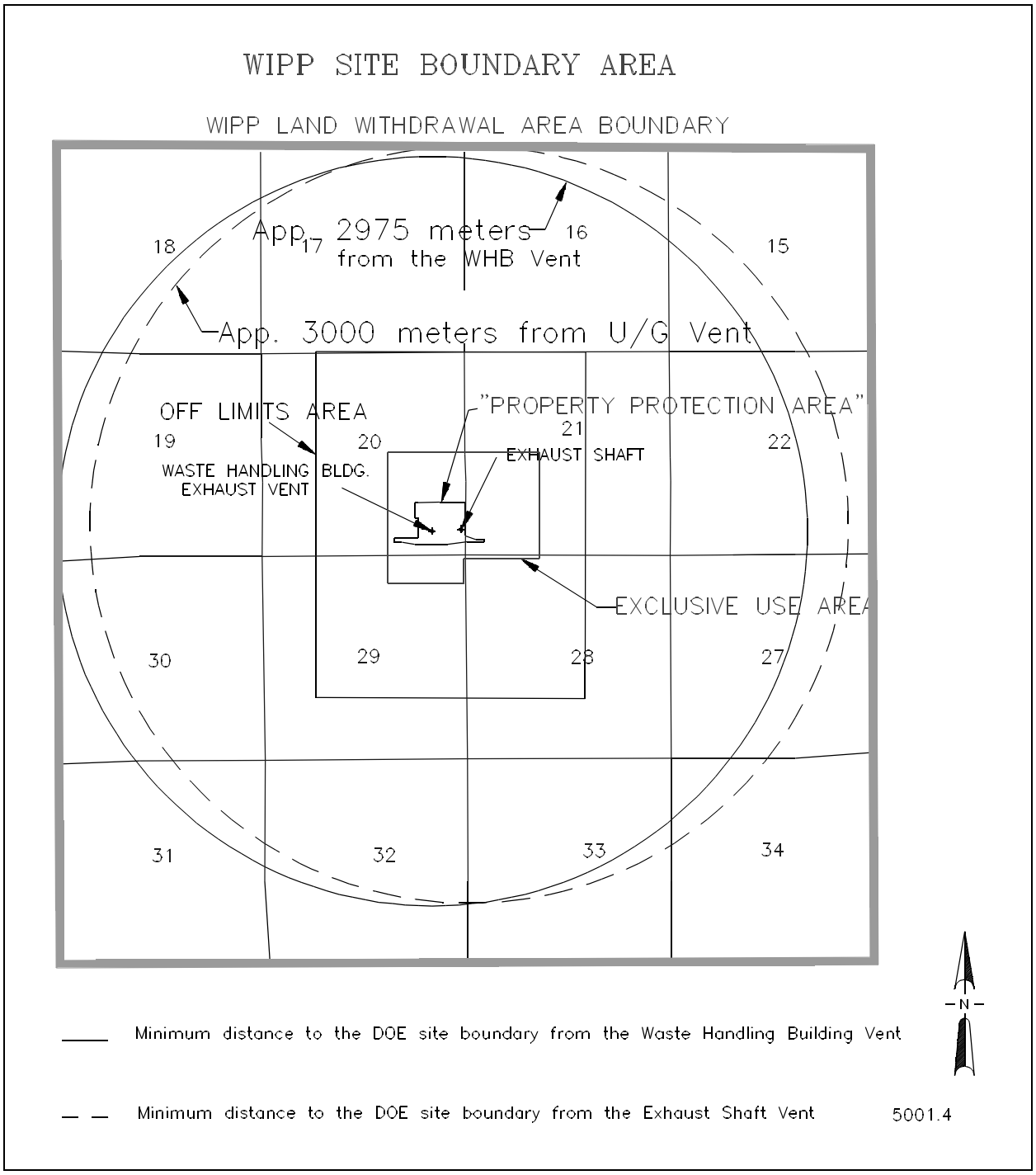

Figure 5.2-1, WIPP Site Boundary Area

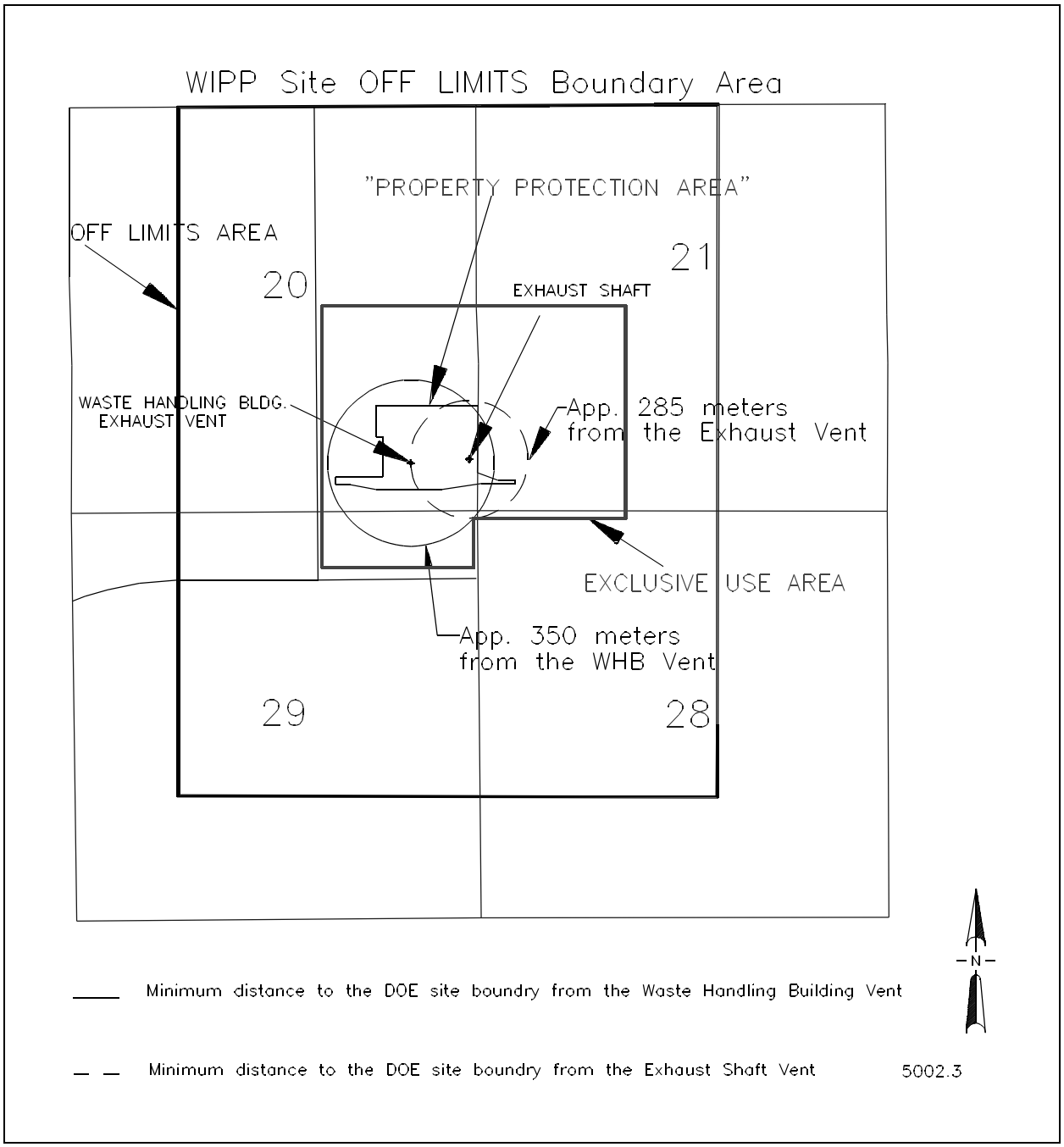

Figure 5.2-2, WIPP Site Off-Limits Boundary Area

Table 5.2-1a MEI Risk Evaluation Guidelines

Description	Estimated Annual Frequency of Occurrence	Description	Radiological Guidelines	Nonradiological Guidelines
Normal operations	$1 \geq f > 10^{-1}$			
Anticipated	$10^{-1} \geq f \geq 10^{-2}$	Incidents that may occur several times during the lifetime of the facility. (Incidents that commonly occur)	≤ 2.5 rem (25 mSv)	ERPG-1
Unlikely	$10^{-2} \geq f > 10^{-4}$	Accidents that are not anticipated to occur during the lifetime of the facility. Natural phenomena of this class include: Uniform Building Code-level earthquake, 100-year flood, maximum wind gust, etc.	≤ 6.5 rem (65 mSv)	ERPG-1
Extremely Unlikely	$10^{-4} \geq f > 10^{-6}$	Accidents that will probably not occur during the life cycle of the facility.	≤ 25 rem (250 mSv)	ERPG-2
Beyond Extremely Unlikely	$10^{-6} \geq f$	All other accidents.	No Guidelines	No Guidelines

Table 5.2-1b Noninvolved Worker Risk Evaluation Guidelines

Description	Estimated Annual Frequency of Occurrence	Description	Radiological Guidelines	Nonradiological Guidelines
Normal operations	$1 \geq f > 10^{-1}$			
Anticipated	$10^{-1} \geq f \geq 10^{-2}$	Incidents that may occur several times during the lifetime of the facility. (Incidents that commonly occur)	≤ 5 rem (50 mSv)	ERPG-1
Unlikely	$10^{-2} \geq f > 10^{-4}$	Accidents that are not anticipated to occur during the lifetime of the facility. Natural phenomena of this class include: Uniform Building Code-level earthquake, 100-year flood, maximum wind gust, etc.	≤ 25 rem (250 mSv)	ERPG-2
Extremely Unlikely	$10^{-4} \geq f > 10^{-6}$	Accidents that will probably not occur during the life cycle of the facility.	≤ 100 rem (1 Sv)	ERPG-3
Beyond Extremely Unlikely	$10^{-6} \geq f$	All other accidents.	No Guidelines	No Guidelines

Table 5.2-2 Toxicological Guidelines*

Substance	ERPG 1 - 2 - 3 (mg/m^3)	TEEL 1 -2 -3 (mg/m^3)
Asbestos	Not Available	1 - 0.3 2 - 1.0 3 - 500
Beryllium	1 - n/a 2 - 0.025 3 - 0.1	1 - 0.005
Cadmium	Not Available	1 - 0.03 2 - 4.0 3 - 9.0
Lead	Not Available	1 - 0.15 2 - 0.25 3 - 100
Butyl Alcohol	Not Available	1 - 150 2 - 150 3 - 4000
Carbon Tetrachloride	1 - 125 2 - 600 3 - 4000	
Mercury	1 - n/a 2 - 2.05 3 - 4.1	1 - 0.075
Methyl Alcohol	1 - 250 2 - 1250 3 - 6000	
Methylene Chloride	1 - 600 2 - 2500 3 - 12500	
Chloroform	1 - n/a 2 - 250 3 - 25000	1 - 10
1,1,2,2-Tetrachloroethane	Not Available	1 - 20 2 - 35 3 - 600
Trichloroethylene	1 - 500 2 - 2500 3 - 25000	
Polychlorinated Biphenyls (PCBs)	Not Available	1 - 3.0 2 - 5.0 3 - 5.0

* Values are from SCAPA's Revision 18 of ERPGs and TEELs for Chemicals of Concern - Table 4

Table 5.2-3a Summary of Noninvolved Worker and MEI Estimated Radiological Concentrations and Comparison to Guidelines [1]

Page 1 of 2

Accident	Unmitigated Release Freq/yr[2]	Noninvolved Worker /MEI Guidelines (rem)	Type of Release	Type of Loading	Receptor Dose (CEDE-rem)			Receptor Dose % of Guidelines [(Dose/Guidelines)*100]		
					On-site (Non-involved Worker)	Exclusive Use Area Boundary (MEI)	Site Boundary	On-site (Non-involved Worker)	Exclusive Use Area Boundary (MEI)	Site Boundary
RH4-A Loss of Confinement U/G (Waste Hoist)	Beyond Extremely Unlikely	100/25	Canister/ mitigated	Direct	1.46E-05	1.37E-06	9.44E-08	<1%	<1%	<1%
				Double Contained	4.38E-06	4.10E-07	2.83E-08	<1%	<1%	<1%
			Canister/ unmitigated	Direct	1.46E+01	1.37E+00	9.44E-02	15%	5%	<1%
				Doubled Contained	4.38E+00	4.10E-01	2.83E-02	4%	2%	<1%
RH4-B Loss of Confinement U/G (forklift)	Unlikely	25/6.5	Canister/ mitigated	Direct	5.84E-07	5.46E-08	3.78E-09	<1%	<1%	<1%
				Double Contained	1.75E-07	1.64E-08	1.13E-09	<1%	<1%	<1%
			Canister/ unmitigated	Direct	5.84E-01	5.46E-02	3.78E-03	2%	<1%	<1%
				Double Contained	1.75E-01	1.64E-02	1.13E-03	<1%	<1%	<1%
RH6 Seismic Event	Unlikely	25/6.5	Canister/ mitigated	Direct	No Release	No Release	No Release	N/A	N/A	N/A
				Double Contained	No Release	No Release	No Release	N/A	N/A	N/A
			Canister/ unmitigated	Direct	No Release	No Release	No Release	N/A	N/A	N/A
				Double Contained	No Release	No Release	No Release	N/A	N/A	N/A
NC1 Fire in the Hot Cell	Extremely Unlikely	100/25	Drum/ mitigated	Direct	8.23E-06	6.49E-07	4.84E-08	<1%	<1%	<1%
			Drum/ unmitigated	Direct	8.23E+00	6.49E-01	4.84E-02	8%	3%	<1%
NC3-A, NC3-B Puncture Drum or Canister Outside Hot Cell	Unlikely	25/6.5	Drum/ mitigated	Direct	1.64E-06	1.30E-07	9.67E-09	<1%	<1%	<1%
			Drum/ unmitigated	Direct	1.64E+00	1.30E-01	9.67E-03	7%	2%	<1%
NC3-C, NC3-E Dropped/ Puncture Drum in Hot Cell	Unlikely	25/6.5	Drum/ mitigated	Direct	8.22E-07	6.49E-08	4.83E-09	<1%	<1%	<1%
			Drum/ unmitigated	Direct	8.22E-01	6.49E-02	4.83E-03	3%	<1%	<1%
NC3-D Dropped Drum outside Hot Cell	Unlikely	25/6.5	Drum/ mitigated	Direct	4.11E-07	3.24E-08	2.42E-09	<1%	<1%	<1%
			Drum/ unmitigated	Direct	4.11E-01	3.24E-02	2.42E-03	2%	<1%	<1%

Table 5.2-3a Summary of Noninvolved Worker and MEI Estimated Radiological Concentrations and Comparison to Guidelines [1]

Page 2 of 2

Accident	Unmitigated Release Freq/yr[2]	Noninvolved Worker /MEI Guidelines (rem)	Type of Release	Type of Loading	Receptor Dose (CEDE-rem)			Receptor Dose % of Guidelines [(Dose/Guidelines)*100]		
					On-site (Non-involved Worker)	Exclusive Use Area Boundary (MEI)	Site Boundary	On-site (Noninvolved Worker)	Exclusive Use Area Boundary (MEI)	Site Boundary
NC3-F Puncture of Drum or Canister outside of Hot Cell	Unlikely	25/6.5	Drum/ mitigated	Direct	2.47E-06	1.95-07	1.45E-08	<1%	<1%	<1%
			Drum/ unmitigated	Direct	2.47E+00	1.95E-01	1.45E-02	10%	3%	<1%
NC4 LOC in Transfer Cell or U/G	LOC in Transfer Cell Bounded by RH3 which is Beyond Extremely Unlikely		N/A	N/A	N/A	N/A	N/A	N/A	N/A	N/A
	LOC in U/G bounded by RH4-A (beyond extremely unlikely and RH4-B(unlikely)		same as RH4-B	same as RH4-B	N/A	N/A	N/A	N/A	N/A	N/A
NC7 Seismic Event	Unlikely	25/6.5	Drum/ mitigated	Direct	No Release	No Release	No Release	N/A	N/A	N/A
			Drum/ unmitigated	Direct	No Release	No Release	No Release	2%	<1%	<1%
NC8 Tornado Event	Extremely Unlikely	25/6.5	Drum/ mitigated	Direct	No Release	No Release	No Release	N/A	N/A	N/A
			Drum/ mitigated	Direct	No Release	No Release	No Release	N/A	N/A	N/A

Notes: (1) Listed accidents are those whose unmitigated frequency, as derived in Appendix D, is $>10^{-6}$/yr and accidents whose quantification of the active components caused the frequency exceed 10^{-6}/yr. The consequences of beyond extremely unlikely accidents may be found in the respective accident scenario or Appendix E.

(2) The unmitigated release frequency is as derived from the event tree (Appendix D)

1 REM = .01 Sv 1mg/m^3 * 1.6E7 = 1lb/ft^3

Table 5.2-3b Summary of Immediate Worker Estimated Radiological Dose and Comparison to Guidelines [1] **Page 1 of 2**

Accident	Unmitigated Release Freq/yr[2]	Immediate Worker Guidelines (rem)	Type of Release	Type of Loading	Receptor Dose (CEDE-rem)	Receptor Dose % of Guidelines [(Dose/Guideline)*100]
RH4-A LOC in U/G (hoist)	Beyond Extremely Unlikely	100	Canister/ Unmitigated	Direct	1.16E+02	116%
				Double Contained	3.48E+01	34.8%
RH4-B LOC in U/G (forklift)	Unlikely	100	Canister/ Unmitigated	Direct	5.41E+00	5.41%
				Double Contained	1.62E+00	1.62%
RH6 Seismic Event	Unlikely	100	Canister/ Unmitigated	Direct	No Release	NA
				Double Contained	No Release	NA
NC1 Fire in the Hot Cell	Extremely Unlikely	100	Drum/ Unmitigated	Direct	No Immediate Worker Present	NA
NC3-A Puncture of drum inside Hot Cell	Unlikely	100	Drum/ Unmitigated	Direct	No Immediate Worker Present	NA
NC3-B Puncture of drum inside CUR	Unlikely	100	Drum/ Unmitigated	Direct	No Immediate Worker Present	NA
NC3-C, NC3-E Dropped or Punctured Drum in Hot Cell	Unlikely	100	Drum/ Unmitigated	Direct	No Immediate Worker Present	NA
NC3-D Dropped Drum/Canister outside Hot Cell (inside CUR or Transfer Cell	Unlikely	100	Drum or Canister/ Unmitigated	Direct	No Immediate Worker Present	NA
NC3-F Puncture of Drum or Canister outside of Hot Cell (inside Transfer Cell)	Unlikely	100	Drum or Canister/ Unmitigated	Drum Direct / Canister Double Contained	No Immediate Worker Present	NA

Table 5.2-3b Summary of Immediate Worker Estimated Radiological Dose and Comparison to Guidelines [1] **Page 2 of 2**

Accident	Unmitigated Release Freq/yr[2]	Immediate Worker Guidelines (rem)	Type of Release	Type of Loading	Receptor Dose (CEDE-rem)	Receptor Dose % of Guidelines [(Dose/Guideline)*100]
NC4 LOC in Transfer Cell or U/G	Extremely Unlikely	100 Transfer Cell	Canister / Unmitigated	Double Contained	No Immediate Worker Present in Transfer Cell	NA for Transfer Cell
		U/G Bounded by RH4-B			1.62E+00	1.62%
NC7 Seismic Event	Unlikely	100	Drum/ Unmitigated	Direct	No Release	NA
NC8 Tornado Event	Extremely Unlikely	100	Drum/ Unmitigated	Direct	No Release	NA

Notes: (1) Listed accidents are those whose unmitigated frequency, as derived in Appendix D, is $>10^{-6}$/yr and accidents whose quantification of the active components caused the frequency to exceed 10^{-6}/yr. The consequences of beyond extremely unlikely accidents may be found in the respective accident scenario.

(2) The unmitigated frequency is as derived from the event tree (Appendix D)

1 REM = .01 Sv

Table 5.2-4a Summary of Noninvolved Worker and MEI Estimated Nonradiological Concentrations and Comparison to Guidelines [1]

Page 1 of 3

Accident	Unmitigated Release Freq/yr [2]	Type of Release	Compound	Concentrations (mg/m^3)		Noninvolved Worker/MEI Guidelines (mg/m^3)	% of Guidelines	
				Noninvolved Worker Area	Exclusive Use Area		Noninvolved Worker Area	Exclusive Use Area
RH4-A, Loss of Confinement U/G (Waste Hoist)	Beyond Extremely Unlikely	Canister/ Unmitigated	Methylene Chloride	3.99E+00	3.74E-01	1.25E+04 / 2.50E+03	<1%	<1%
			Carbon Tetrachloride	7.38E+00	6.90E-01	4.00E+03 / 6.00E+02	<1%	<1%
			Chloroform	3.86E-01	3.61E-02	2.50E+04 / 2.50E+02	<1%	<1%
			1,1,2,2 Tetrachloroethane	2.02E-01	1.89E-02	6.00E+02 / 3.50E+01	<1%	<1%
RH4-B, Loss of Confinement U//G (forklift)	Unlikely	Canister/ Unmitigated	Methylene Chloride	4.00E+00	3.74E-01	2.50E+03 / 6.0E+02	<1%	<1%
			Carbon Tetrachloride	7.38E+00	6.90E-01	6.0E+02 / 1.25E+02	1.2%	<1%
			Chloroform	3.86E-01	3.61E-02	2.5E+02 / 1.0E+01	<1%	<1%
			1,1,2,2 Tetrachloroethane	2.02E-01	1.89E-02	3.5E+01 / 2.0E+01	<1%	<1%
RH6, Seismic Event	Unlikely	No Release	N/A	N/A	N/A	N/A	N/A	N/A
NC1, Fire in Hot Cell	Extremely Unlikely	Drum/ Unmitigated	Asbestos	1.01E-03	7.94E-05	5.00E+02 / 1.00E+00	<1%	<1%
			Beryllium	1.01E-05	8.00E-07	1.00E-01 / 2.50E-2	<1%	<1%
			Cadmium	1.45E-07	1.15E-08	9.00E+00 / 4.00E+00	<1%	<1%
			Lead	4.02E-04	3.17E-05	1.00E+02 / 2.50E-01	<1%	<1%
			Butyl Alcohol	1.45E-04	1.15E-05	4.00E+03 / 1.50E+02	<1%	<1%
			Carbon Tetrachloride	3.05E-04	2.40E-05	4.00E+03 / 6.00E+02	<1%	<1%
			Mercury	4.24E-05	3.34E-06	4.10E+00 / 2.50E+00	<1%	<1%
			Methyl Alcohol	3.87E-07	3.05E-08	6.00E+03 / 1.25E+03	<1%	<1%
			Methylene Chloride	1.94E-05	1.53E-06	1.25E+04 / 2.50E+03	<1%	<1%
			PCBs	4.11E-04	3.24E-05	5.00E+00 / 2.50E+00	<1%	<1%
			Trichloroethylene	1.89E-04	1.49E-05	2.50E+04 / 2.50E+03	<1%	<1%

Table 5.2-4a Summary of Noninvolved Worker and MEI Estimated Nonradiological Concentrations and Comparison to Guidelines

Page 2 of 3

Accident	Unmitigated Release Freq/yr [2]	Type of Release	Compound	Concentrations (mg/m^3)		Noninvolved Worker/MEI Guidelines (mg/m^3)	% of Guidelines	
				Noninvolved Worker Area	Exclusive Use Area		Noninvolved Worker Area	Exclusive Use Area
NC3-A, Puncture of drum in Hot Cell	Unlikely	Drum/ Unmitigated	Methylene Chloride	1.03E+01	8.14E-01	2.50E+03 / 6.00E+02	<1%	<1%
			Carbon Tetrachloride	1.90E+01	1.50E+00	6.00E+02 / 1.25E+02	3.2%	1.2%
			Chloroform	9.96E-01	7.86E-02	2.50E+02 / 1.00E+01	<1%	<1%
			1,1,2,2 Tetrachloroethane	5.20E-01	4.10E-02	3.50E+01 / 2.00E+01	1.5%	<1%
NC3-B, Drum Puncture in CUR	Unlikely	Drum/ Unmitigated	Methylene Chloride	5.16E+00	4.07E-01	2.50E+03 / 6.00E+02	<1%	<1%
			Carbon Tetrachloride	9.52E+00	7.51E-01	6.00E+02 / 1.25E+02	1.5%	<1%
			Chloroform	4.98E-01	3.93E-02	2.50E+02 / 1.00E+01	<1%	<1%
			1,1,2,2 Tetrachloroethane	2.60E-01	2.05E-02	3.50E+01 / 2.00E+01	<1%	<1%
NC3-C, Dropped drum/facility canister in Hot Cell	Unlikely	Drum/ Unmitigated	Methylene Chloride	2.06E+00	1.63E-01	2.50E+03 / 6.00E+02	<1%	<1%
			Carbon Tetrachloride	3.81E+00	3.00E-01	6.00E+02 / 1.25E+02	<1%	<1%
			Chloroform	1.99E-01	1.57E-02	2.50E+02 / 1.00E+01	<1%	<1%
			1,1,2,2 Tetrachloroethane	1.04E-01	8.21E-03	3.50E+01 / 2.006E+01	<1%	<1%
NC3-D, Dropped drum carriage inside CUR or facility canister inside Transfer Cell)	Unlikely	Drum or facility canister/ Unmitigated	Methylene Chloride	1.03E+01	8.14E-01	2.50E+03 / 6.00E+02	<1%	<1%
			Carbon Tetrachloride	1.90E+01	1.50E+00	6.00E+02 / 1.25E+02	3.1%	1.2%
			Chloroform	9.96E-01	7.86E-02	2.50E+02 / 1.00E+01	<1%	<1%
			1,1,2,2 Tetrachloroethane	5.20E-01	4.10E-02	3.50E+01 / 2.00E+01	1.5%	<1%

Table 5.2-4a Summary of Noninvolved Worker and MEI Estimated Nonradiological Concentrations and Comparison to Guidelines

Accident	Unmitigated Release Freq/yr [2]	Type of Release	Compound	Concentrations (mg/m^3)		Noninvolved Worker/MEI Guidelines (mg/m^3)	% of Guidelines	
				Noninvolved Worker Area	Exclusive Use Area		Noninvolved Worker Area	Exclusive Use Area
NC3-E, Drum Puncture in Hot Cell	Unlikely	Drum/ Unmitigated	Methylene Chloride	1.03E+00	8.14E-02	2.50E+03 / 6.00E+02	<1%	<1%
			Carbon Tetrachloride	1.90E+01	1.50E-01	6.00E+02 / 1.25E+02	3.1%	<1%
			Chloroform	9.96E-02	7.86E-02	2.50E+02 / 1.00E+01	<1%	<1%
			1,1,2,2 Tetrachloroethane	5.20E-02	4.10E-03	3.50E+01 / 2.00E+01	<1%	<1%
NC3-F, facility canister puncture inside Transfer Cell	Unlikely	Facility canister/ Unmitigated	Methylene Chloride	3.09E+00	2.44E-01	2.50E+03 / 6.00E+02	<1%	<1%
			Carbon Tetrachloride	5.71E+00	4.51E-01	6.00E+02 / 1.25E+02	<1%	<1%
			Chloroform	2.99E-01	2.36E-02	2.50E+02 / 1.00E+01	<1%	<1%
			1,1,2,2 Tetrachloroethane	1.56E-01	1.23E-02	3.50E+01 / 2.00E+01	<1%	<1%
NC4, facility canister LOC in Transfer Cell or in U/G	LOC in Transfer Cell Beyond Extremely Unlikely	Facility canister/ Unmitigated	LOC in Transfer Cell same consequences as RH3					
	LOC in U/G Extremely Unlikely	Facility canister/ Unmitigated	LOC in U/G same consequences as RH4-B)					
NC7, Seismic Event	Unlikely	No Release	NA	NA	NA	NA	NA	NA
NC8, Tornado Event	Extremely Unlikely	No Release	NA	NA	NA	NA	NA	NA

Notes: (1) Listed accidents are those whose unmitigated frequency, as derived in Appendix D, is $>10^{-6}$/yr and accidents whose quantification of the active components caused the frequency exceed 10^{-6}/yr. The consequences of beyond extremely unlikely accidents may be found in the respective accident scenario and Appendix E.

Table 5.2-4b Summary of Immediate Worker Estimated Nonradiological Concentrations and Comparison to Guidelines[1]

Accident	No-mitigation Freq/yr	Compound	Noninvolved Worker Guidelines (mg/m^3)*	Concentration (mg/m^3	% of Guidelines
RH4-A, Loss of Confinement U/G (waste hoist)	Beyond Extremely Unlikely	Methylene Chloride	1.25E+04	3.17E+01	< 1%
		Carbon Tetrachloride	4.00E+03	5.85E+01	1.5%
		Chloroform	2.50E+04	3.06E+00	< 1%
		1,1,2,2 Tetrachloroethane	6.00E+02	1.60E+00	< 1%
RH4-B, Loss of Confinement U//G (forklift)	Unlikely	Methylene Chloride	1.25E+04	3.70E+01	< 1%
		Carbon Tetrachloride	4.00E+03	6.83E+01	1.7%
		Chloroform	2.50E+04	3.57E+00	< 1%
		1,1,2,2 Tetrachloroethane	6.00E+02	1.87E+00	< 1%
RH6, Seismic Event	Unlikely	No release	N/A	N/A	N/A
NC1, Fire in Hot Cell	Extremely Unlikely	No immediate worker in Hot Cell	N/A	N/A	N/A
NC3-A, Puncture of drum in Hot Cell	Unlikely	No immediate worker in Hot Cell	N/A	N/A	N/A
NC3-B, Drum Puncture in CUR	Unlikely	No immediate worker in CUR	N/A	N/A	N/A
NC3-C, Dropped drum/facility canister in Hot Cell	Unlikely	No immediate worker in Hot Cell	N/A	N/A	N/A
NC3-D, Dropped drum carriage inside CUR or facility canister inside Transfer Cell	Unlikely	No immediate worker in Transfer Cell or CUR	N/A	N/A	N/A

Table 5.2-4b Summary of Immediate Worker Estimated Nonradiological Concentrations and Comparison to Guidelines

Accident	No-mitigation Freq/yr	Compound	Noninvolved Worker Guidelines (mg/m^3)*	Concentration (mg/m^3	% of Guidelines
NC3-E, Drum Puncture in Hot Cell	Unlikely	No immediate worker in Hot Cell	N/A	N/A	N/A
NC3-F, facility canister puncture inside Transfer Cell	Unlikely	No immediate worker in Transfer Cell	N/A	N/A	N/A
NC4, facility canister LOC in Transfer Cell or in U/G	Beyond Extremely Unlikely	No immediate worker in Transfer Cell	N/A	N/A	N/a
	Extremely Unlikely	LOC in U/G same consequences as RH4-B	See RH4-B	See RH4-B	See RH4-B
NC7, Seismic Event	Unlikely	No Release	N/A	N/A	N/A
NC8, Tornado Event	Extremely Unlikely	No Release	N/A	N/A	N/A

Notes: (1) Listed accidents are those whose unmitigated frequency, as derived in Appendix D, is $>10^{-6}$/yr and accidents whose quantification of the active components caused the frequency exceed 10^{-6}/yr. The consequences of beyond extremely unlikely accidents may be found in the respective accident scenario and Appendix E.

* EPRG-3 values used for all frequencies

This page intentionally blank

5.3 Long-Term Waste Isolation Assessment

Applicable regulations require the DOE to demonstrate the ability of the WIPP repository to isolate TRU wastes for a 10,000-year period (40 CFR 191[1]). To evaluate the long-term performance of the disposal system, the DOE uses a technique developed especially for predicting the behavior of geologic repositories over the thousands of years required for waste isolation. This technique is performance assessment which is a multi disciplinary, iterative, analytical process that begins by using available information that characterizes the waste and the disposal system (the design of the repository, the repository seals, and the natural barriers provided by the host rock and the surrounding formations). The DOE uses performance assessment to estimate the releases of radionuclides, based on the probabilities of these relevant FEPs occurring. Sensitivity analyses are used by the DOE to determine which characteristics of the disposal system exert the greatest effect on performance. The results of performance assessment are used by the DOE in the 40 CFR Part 191 compliance program to assess the disposal system's behavior and the possible environmental releases.

The DOE's methodology for performance assessment uses relevant information about the disposal system and the waste to simulate performance over the regulatory time periods. This process is schematically represented by the flow diagram in Figure 5.3-1, which shows how information describing the disposal system is used by the DOE to develop scenarios, scenario probabilities, and the consequence models used to estimate performance. The WIPP performance assessment methodology has been reviewed by the NAS, the EEG, and experts in and outside the United States. Initially, the DOE used the process in Figure 5.3-1 with a feedback line from the Uncertainty Analysis block to the System Description block. In this way, the DOE used performance assessment to identify important parameters and the programs needed to better define the parameters and to obtain relevant information.

Uncertainty and how it is handled in the analysis plays a major role in the formulation of a performance assessment strategy. The EPA anticipates that uncertainty in long-term predictions will be inevitable and substantial (see 40 CFR § 191.13(b)). Because of this, the Agency applies a reasonableness test to the outcome of performance assessments. In other words, the uncertainty that is inherent in modeling the behavior of natural and engineered system is such that there is likely no single correct set of models and assumptions. Instead, there are those models and assumptions that lead to a "reasonable expectation" that compliance will be achieved.

The DOE has addressed uncertainty associated with the WIPP disposal system through careful site, facility, and waste characterization. Uncertainty remaining after these characterizations is incorporated into the performance assessment through the use of reasonable assumptions about models and parameter distributions.

In general, the DOE has not attempted to bias the performance assessment toward a conservative outcome, the mean CCDF represents a best estimate of the expected, and in the case of human intrusion, prescribed performance of the disposal system. However, where realistic approaches to incorporating uncertainty are unavailable or impractical, and where the impact of the uncertainty on performance is small, the DOE has chosen to simplify the analysis by implementing conservative assumptions. The conservatism in the analysis does not significantly affect the location of the mean CCDF in Figure 5.3-2 (DOE/CAO-1996-2184, Title 40 CFR Part 191, Compliance Certification Application for the Waste Isolation Pilot Plant, October 1996[2]).

References for Section 5.3

1. 40 CFR 191, Environmental Standards for the Management and Disposal of Spent Nuclear Fuel, High-Level and Transuranic Wastes, Subpart A, Environmental Standards for Management and Storage.

2. DOE/CAO-1996-2184, Title 40 CFR Part 191, Compliance Certification Application for the Waste Isolation Pilot Plant, October 1996.

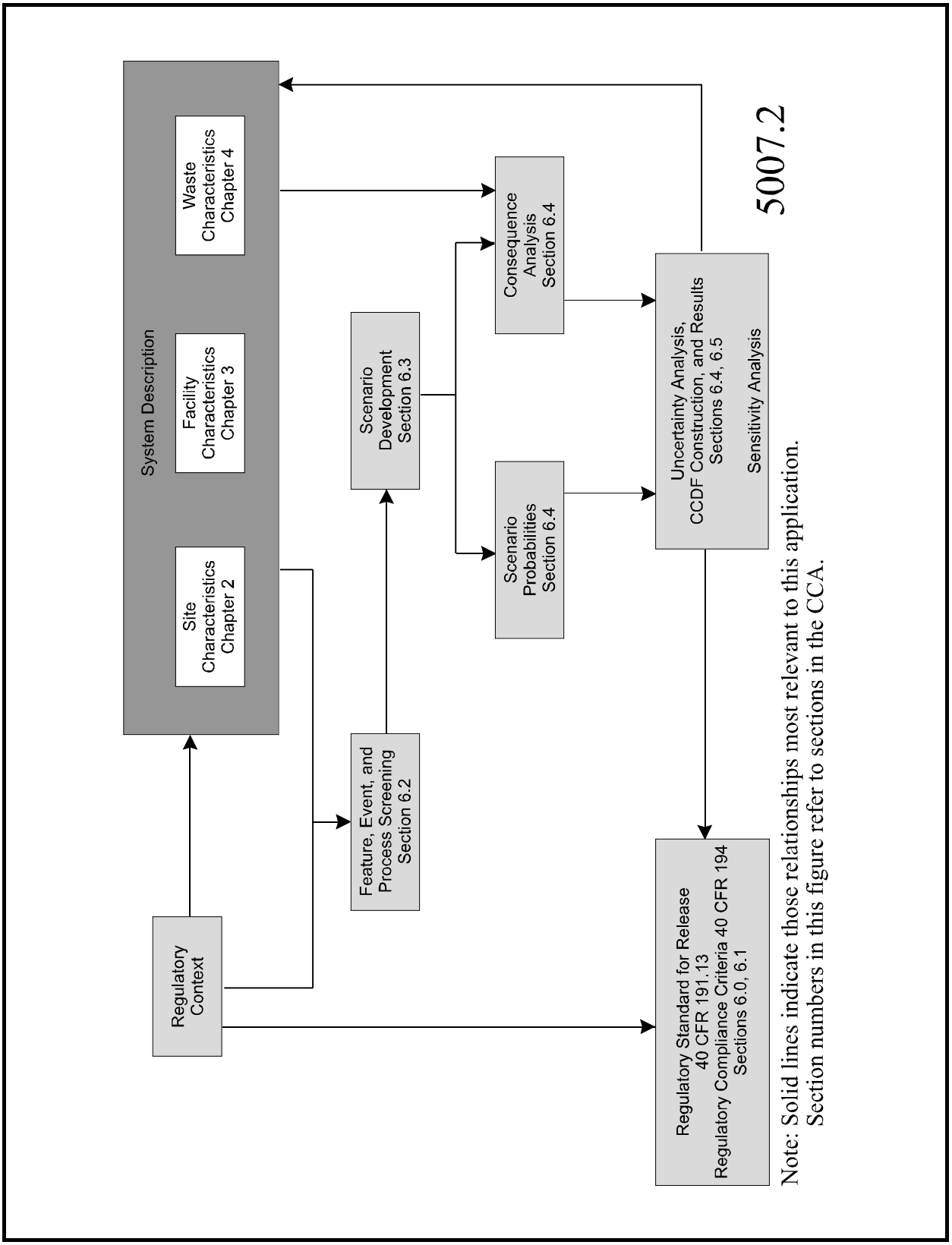

Figure 5.3-1, Methodology for Performance Assessment for the WIPP

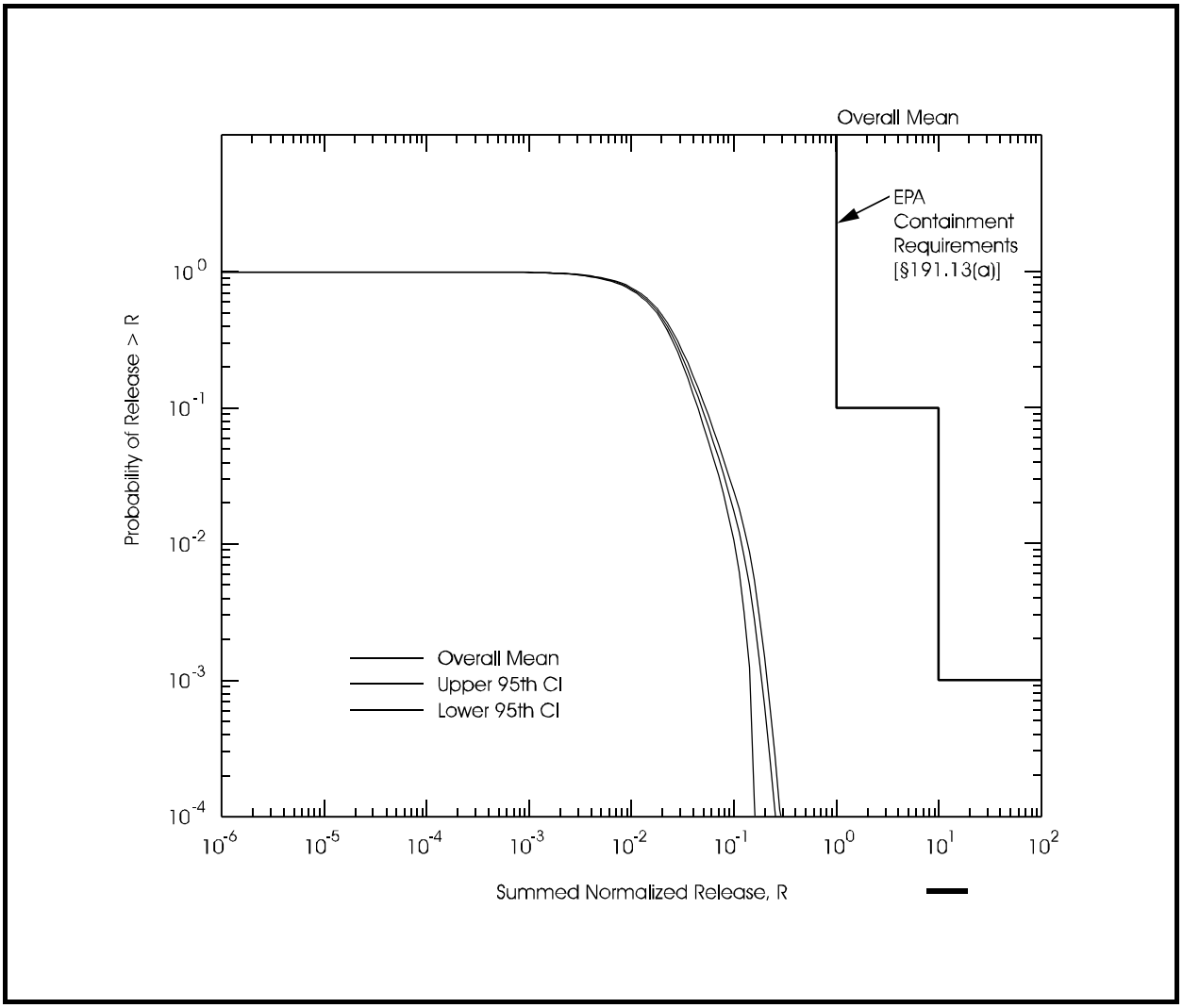

Figure 5.3-2, Final WIPP CCDF

5.4 Conclusions

The analyses in this chapter provide a detailed review of the potential hazards associated with RH TRU waste handling operations. The methodologies used in this process included qualitative hazard analysis and a quantitative evaluation of the potential consequences of postulated accidents. The hazard analysis process indicated that seven potential accident scenarios required further review and quantitative evaluation. Based on bounding canister inventory and release estimates, the calculated accident consequences were compared to accident risk evaluation guidelines for the public and found to be significantly below the guidelines.

Additionally, (1) the analysis indicated safety class or safety significant SSCs are not required for the WIPP to mitigate any accident radiological and non-radiological consequence to below risk evaluation guidelines, and (2) per the discussion in Section 4.4.1, secondary confinement is not required. Defense-in-depth SSCs while not required to prevent or to mitigate the consequences of an accident from exceeding the risk evaluation guidelines support the WIPP defense-in-depth philosophy.

This page intentionally blank

DERIVATION OF TECHNICAL SAFETY REQUIREMENTS
TABLE OF CONTENTS

SECTION	TITLE	PAGE NO.
6.1	Requirements	6.1-1
6.2	PTSR Coverage	6.2-1
6.3	Derivation of Facility Modes	6.3-1
6.3.1	Waste Handling Mode	6.3-1
6.3.2	Waste Storage/Disposal Mode	6.3-1
6.4	Derivation of WIPP TSRs	6.4-1
6.4.1	Safety Limits (SLs)	6.4-1
6.4.2	Limiting Control Settings (LCSs)	6.4-1
6.4.3	Limiting Conditions for Operations (LCOs)	6.4-1
6.4.4	Surveillance Requirements (SRs)	6.4-3
6.4.5	Administrative Controls	6.4-3
	6.4.5.2 SSCs Required to Support Defense-In-Depth	6.4-4
	6.4.5.2 Defense-In-Depth SSC Operation	6.4-5
6.5	Design Features	6.5-1
6.6	Interface TSRs	6.6-1
	References for Chapter 6	6.6-2

DERIVATION OF TECHNICAL SAFETY REQUIREMENTS
LIST OF TABLES

TABLE **TITLE** **PAGE NO.**

Table 6-1, Summary of Defense-In-Depth Functions and Defense-in-Depth Features Important to Accident Scenarios 6.6-3
Table 6-2, Summary of Applicability of Defense-In-Depth SSCs to WIPP Modes 6.6-18

DERIVATION OF TECHNICAL SAFETY REQUIREMENTS

This section provides the basis for deriving the WIPP preliminary Technical Safety Requirements (PTSRs) for Remote Handled (RH) waste initially in accordance with the requirements of DOE Order 5480.22, Technical Safety Requirements[1] and is in compliance with 10 CFR 830.205.[2] This section provides the link between the Hazards and Accident Analysis in Chapter 5 of this document and the WIPP PTSRs, DOE/WIPP-03-3178. 10 CFR 830.205[2] and its guide provide detailed criteria for the selection of PTSR Safety Limits (SLs), Limiting Control Settings (LCSs), Limiting Conditions for Operations (LCOs), Surveillance Requirements (SRs), and Administrative Controls (ACs).

The Chapter 5 Hazards and Accident Analyses indicate that SLs, LCSs, LCOs, and SRs are not required for the WIPP facility as derived below. As discussed in Chapter 5, Design Class I Systems, Structures or Components (SSCs) are not required for the WIPP to mitigate any accidental radiological and non-radiological off-site Maximally Exposed Individual (MEI) or noninvolved worker consequences to acceptable levels. WIPP PTSRs in the form of administrative controls (ACs) are derived in this chapter. These ACs provide PTSRs covering the WIPP defense-in-depth approach developed in Chapter 5.

6.1 Requirements

Requirements for the derivation of PTSRs are specified in 10 CFR 830.205[2] and its guide.

This page intentionally blank

6.2 PTSR Coverage

ACs impose administrative requirements necessary to control operation of the facility such that all PTSR requirements are met. Since no SLs, LCSs, LCOs, or SRs are defined for the WIPP, WIPP specific ACs impose administrative requirements necessary to ensure operation of the facility consistent with the design that was shown to be safe in Chapter 5. These administrative requirements are defined in Section 6.4.5.

This page intentionally blank

6.3 Derivation of Facility Modes

Operations at the WIPP consist mainly of waste handling, storage, and disposal operations. The following is a definition of the modes of operations. The mode of operation is defined such that the Waste Handling Building (WHB) and the Underground may be in different modes. Prior to receiving waste, the facility is required to be in one of the modes of operation.

6.3.1 Waste Handling Mode

The WHB and/or the Underground is configured for waste handling, and all required defense-in-depth SSCs are operated as required. Maintenance, repair activities, and inspections are allowed as long as they do not prevent the functions of the defense-in depth SSCs required for the Waste Handling Mode. The required SSCs described in Table 6-2 ensure that the defense-in-depth features identified in Chapter 5 as consequence mitigators or additional preventative features are available during those activities (waste handling) that introduce the potential for significant accidents.

6.3.2 Waste Storage/Disposal Mode

Waste handling operations are not being conducted in the WHB and/or in the Underground. WHB and/or the Underground is configured for waste storage or disposal. After receipt of waste, the facility retains its inventory of radioactive and hazardous material. No waste handling operations are allowed during Waste Storage/Disposal Mode except as required to safely complete a waste handling evolution interrupted by SSC malfunction or unavailability, and in accordance with the applicable procedure. Maintenance, repair activities, and inspections are allowed, provided the SSCs required in Table 6-2 for Waste Storage/Disposal Mode are restored to operation in a timely manner, and SSCs are not intentionally removed from service during waste handling completion.

This page intentionally blank

6.4 Derivation of WIPP TSRs

6.4.1 Safety Limits (SLs)

As defined in DOE Order 5480.22,[1] Technical Safety Requirements, SLs are limits on process variables associated with those physical barriers, generally passive, that are necessary for the intended facility function and that are found to be required to guard against the uncontrolled release of radioactivity and other hazardous material. "Process Variables" refers to observable, measurable parameters such as temperature and pressure. "Passive physical barriers" refers to those barriers that constitute the primary process material boundary.

Based on the analysis presented in Chapter 5, no SLs are identified for the WIPP facility.

6.4.2 Limiting Control Settings (LCSs)

As defined in DOE Order 5480.22,[1] LCSs are settings on safety systems that control process variables to prevent exceeding SLs. More precisely, an LCS is the set point for an instrument or device monitoring a process variable that, if exceeded, initiates actions to prevent exceeding an SL.

The WIPP facility has no SLs identified, therefore, no LCSs are required.

6.4.3 Limiting Conditions for Operations (LCOs)

DOE Order 5480.22,[1] Attachment 1, Section II.2.3.h, provides that "LCOs should be written only for systems and equipment which meet one (or more) of the following descriptions," and prescribes five selection criteria, h.(1) through h.(5). The order also emphasizes that "Maintaining the LCOs at the minimum number necessary will emphasize the importance of the LCOs and better ensure the compliance with them." All five criteria clearly tie the LCOs to the facility accident or transient analyses.

The LCO selection criteria interpretations define TSR content based on key nuclear safety analysis requirements. Specifically, three of the five TSR LCO selection criteria are understood to restrict TSR LCOs to only those requirements that are under the direct control of the facility's operators, and are of primary importance for: **prevention** (Criterion h.(1)), **mitigation** (Criterion h.(2)), and **initial conditions** (Criterion h.(3)) of credible, unmitigated accident scenarios. Additionally, Criterion h.(4) involves the application of criteria h.(1), h.(2), and h.(3) to experiments and experimental facilities, and Criterion h.(5) to systems and equipment that are used for handling fissile material. The specifics of each criterion as applied to the WIPP facility are as follows:

- Criterion h.(1) - Prevention:

  A basic concept in the protection of the public is the prevention of accidents that have the potential for an uncontrolled release of radioactive material. Criterion h.(1) is intended to ensure that TSRs be selected to identify instrumentation that is used to detect, and to indicate in the control room or other control location, a significant degradation of the physical barriers which prevent the uncontrolled release of radioactive or other hazardous materials. For example, instrumentation installed to detect significant degradation of a reactor coolant pressure boundary enables the operator to correct the degraded condition prior to accident initiation or to place the facility in a condition that reduces the likelihood of the accident.

WIPP instrumentation, such as the Continuous Air Monitors (CAMs), Effluent Monitors, Area Radiation Monitors (ARMs), and installed instrumentation to control differential pressure, are not required to prevent accidents as analyzed in the SAR from occurring, or to facilitate the Central Monitoring Room (CMR) operator placing the facility in a condition reducing the likelihood of an accident from occurring. Therefore, Criterion h.(1) has no application to the WIPP.

- Criterion h.(2) - Mitigation:

Criterion h.(2) provides that "Structures, systems, and components that are relied upon in the Safety Analyses to function or actuate to prevent or mitigate accidents, or transients that either involve the assumed failure of, or present a challenge to, the integrity of a physical barrier that prevents the uncontrolled release of radioactive materials ... intended to include only those structures, systems, and components that are part of the primary success path of a safety sequence analysis and those support and actuation systems necessary for them to function successfully."

The "primary success path of a safety sequence analysis" is defined as "the sequence of events assumed by the Safety Analyses, which leads to the conclusion of a transient or accident with consequences that are acceptable. Hence, any SSC in that assumed sequence should be included in the LCO."

Consistent with the primary intent of DOE Order 5480.22[1], establishing requirements for the protection of the public, the existing practice is: 1) to evaluate the unmitigated radiological and non-radiological consequences to the MEI and non-involved worker as the result of an accident; 2) to compare the radiological and non-radiological consequences to established accident risk evaluation guidelines; and 3) if the consequences of the accident exceed the established accident consequence risk evaluation guidelines, to define SSCs and associated TSR LCOs mitigating or reducing those consequences to acceptable levels below the established criteria.

The unmitigated MEI and non-involved worker radiological and non-radiological consequences and risk evaluation guidelines, as documented in Chapter 5, Tables 5.2-3 and 5.2-4, are used as the basis for applying this criterion.

Application of DOE Order 5480.22[1] TSR LCO Selection Criterion h.(2) to the WIPP:

The WIPP SSCs that are assumed to function in the SAR accident analysis mitigating an accident's radiological and non-radiological consequences to within the accident risk evaluation guidelines satisfy Criterion h.(2).

The unmitigated radiological and non-radiological accident consequences were estimated and compared to the risk evaluation guidelines in Chapter 5. The unmitigated radiological and non-radiological accident consequences are below the consequence risk evaluation guidelines; therefore, 1) mitigating SSCs are not required, and 2) TSR LCOs are not required. Tables 5.2-3 and 5.2-4 of Chapter 5 of the SAR list the analyzed accidents, and the mitigated and unmitigated MEI and non-involved worker radiological consequences. All of the radiological and non-radiological accident consequences are well below the applicable risk evaluation guidelines.

- Criterion h.(3) - Initial Condition:

  Process variables as initial conditions of accidents or transients that are monitored and controlled during operations so the parameter remains within the analysis bounds satisfy this selection criterion. The WIPP is not a waste processing facility, therefore process variables are not considered in the PSAR accident analysis as initial conditions for accidents. Thus, Criterion h.(3) is not applicable to the WIPP.

- Criterion h.(4):

  Criterion h.(4) involves applying criteria h.(1), h.(2), and h.(3) to experimental activities involving radioactive or other hazardous materials. There are currently no planned experimental or test activities at the WIPP. Therefore, Criterion h.(4) is not applicable to the WIPP.

- Criterion h.(5):

  Criterion h.(5) applies to fissile material handling facilities and is only related to inadvertent criticality protection. Inadvertent criticality is not a credible hazard at the WIPP. Inadvertent criticality is controlled through the TSR ACs Criticality Program in conjunction with the Waste Characteristics program which conforms to the Remote-Handled Waste Acceptance Criteria (RH WAC).[3] Therefore, Criterion h.(5) is not applicable to the WIPP.

6.4.4 Surveillance Requirements (SRs)

As defined in DOE Order 5480.22,[1] SRs relate to testing, channel calibration, channel operational testing, or inspection to maintain the operability, quality, and safety of SSCs and their support systems. SRs are defined as the requirements necessary to maintain facility operation within the SLs, LCSs, and LCOs. Selection criteria for SRs are defined in DOE Order 5480.22.[1]

Without SLs, LCSs, and LCOs for the WIPP facility, SRs are not required.

6.4.5 Administrative Controls

As discussed in Section 2.4 of Attachment 1 of DOE Order 5480.22,[1] ACs impose necessary requirements controlling operation of the facility to meet all PTSR requirements. Without SLs, LCSs, LCOs, and SRs, WIPP specific ACs impose administrative and operational requirements supporting the WIPP defense-in-depth concept. Basic elements and requirements defined for PTSR AC programs are enforced by the associated implementing WIPP procedures.

Supporting the first layer of defense-in-depth (the prevention of accidents) as defined in Section 5.1.6, WIPP PTSR ACs are established as follows:

- To maintain the design, quality, testability, inspectability, operational capability, maintainability, and accessibility of the facility, PTSR ACs are required relating to: (1) configuration and document control, (2) maintenance, and (3) quality assurance. These ACs are important to ensure the frequency of events and the availability of the operating and design conditions remain as analyzed in Section 5.2.3.

- To ensure that the facility operations are conducted by trained and certified/qualified personnel in a controlled and planned manner, TSR ACs are required relating to: (1) facility operations chain of command and responsibilities, (2) facility staffing requirements, (3) procedures, (4) staff qualifications, (5) conduct of operations, and (6) training. These ACs are important to ensure the low frequency of the accidents analyzed in Section 5.2.3.

- To ensure that hazards are limited within the bounds assumed in Chapter 5.2, or that the occurrence of a deviation from the assumed hazard bounds are at an acceptably low frequency, PTSR ACs are required relating to: (1) waste characteristics (Waste Acceptance Criteria), (2) waste container integrity, (3) criticality safety, (4) fire protection, and (5) waste handling PE-Ci limit. The PTSR AC for waste characteristics limits the radionuclide content of each waste container, restricts the fissile content of the containers, and restricts the presence of waste characteristics unacceptable for management at the WIPP facility. Container integrity ensures the robustness reflected in the waste release analyses, while criticality safety is a designed in-storage and handling configuration that ensures (in conjunction with waste characteristics) that active criticality control is not required.. The fire safety requirement restricts combustible loading in the WHB; and the waste handling PE-Ci limits establish a maximum radionuclide content to ensure the bounds assumed in Section 5.2 are not exceeded.

Supporting the second and third layers of defense-in-depth, WIPP PTSR ACs are identified which establish programs for radiation protection of workers and the environment (including radiation monitoring equipment and airborne radioactivity monitoring), and mitigation of off-normal events through emergency management.

6.4.5.2 SSCs Required to Support Defense-In-Depth

Specific SSCs identified for each accident in Section 5.2.3 that fulfill a defense-in-depth safety function <u>or</u> that are considered essential for waste handling, storage and/or disposal operations are as follows:

1) WHB RH facilities Heating, Ventilation, and Air Conditioning (HVAC);

2) Underground Ventilation and Filtration System (UVFS) (including underground shift to filtration)

3) Waste Hoist Brake System (designated Safety Significant)

4) WASTE HANDLING equipment (including the facility cask loading grapple, grapple hoist system including brakes, RH bay bridge crane, forklifts and attachments, HERE, facility cask rotating device, facility cask transfer car, drum carriage, lifting fixture, etc.) as required during WASTE HANDLING operations only);

5) WHB structure (including Hot Cell with thermal detector) and tornado doors;

6) Central Monitoring System (to support underground shift to filtration only);

7) Radiation Monitoring System (active waste disposal room exit alpha CAM for underground shift to filtration).

8) Devices to restrict operations, including Shield Door and Crane Interlock, Crane and Hot Cell Shield Valve Interlock, Torque limiter on shield valve motor, Force Limiter on Swipe Arm, and Robotic Arm Collision Detector

The applicability of the important defense-in-depth SSCs to each accident analyzed in Section 5.2.3, is listed in Table 6-1. The above SSCs are classified as "defense-in-depth SSCs," and are applicable to each mode as shown in Table 6-2.

As shown in Section 6.4.3, based on the criteria for assigning PTSR LCOs, defense-in-depth SSCs are not assigned PTSR LCOs. The facility has no complex system requirements to maintain an acceptable level of risk. The WIPP WAC for transuranic wastes and the design of the waste handling process and its supporting facilities provide assurance that the immediate consequences of an accident will be limited and allow the WIPP facility to isolate and contain releases while maintaining a high assurance that no additional releases will occur. The facility is designed to minimize the presence and impact of other energy sources that could provide the heat or driving force to disperse hazardous materials. The magnitude of hazardous materials that can be involved in an accident leading to a release is very limited. The radioactive material is delivered to the site in sealed containers, and the waste handling operations are designed to maintain that integrity throughout the entire process required to safely place those containers in the site's underground waste disposal rooms. Inventory limits on individual containers ensure that heat generated by radioactive decay can be easily dissipated by passive mechanisms. Finally, only a limited number of waste containers have the possibility of being breached as a result of any one accident initiating event. As a result, the consequences of unmitigated releases from all accidents hypothesized in Chapter 5, including those initiated by human error, do not produce significant offsite health consequences.

When something unusual happens during normal operations (such as defense-in-depth SSCs becoming unavailable), **waste handling can be simply stopped** until an acceptable operating condition is reestablished. The facility is designed to minimize the presence and impact of other energy sources that could provide the heat or driving force to disperse hazardous materials. Should an accident involving the breach of a container occur, **the plant design permits the immediate cessation of activity and isolation of the area where the breach occurs**. Once isolation is achieved, there is no driving force within the waste or waste handling area that could result in a further release of the waste material. The absence of energy sources that can disperse the radioactive waste allows the immediate termination of all activities, evacuation of personnel, and isolation of the area without the threat of additional consequences. This will enable WIPP personnel to then proceed with detailed planning to meet the unique circumstances of any accidental release prior to initiating decontamination and the execution of recovery actions, while assuring that the health and safety of both workers and the public is protected. The controls necessary to maintain safety during the recovery and cleanup can be documented in the recovery plan, the associated Radiological Work Permit, and the USQ process. In order to ensure protection during recovery from an event that breaches a waste container, the defense-in-depth SSCs for the Waste Handling Mode will be required during the period of time that waste may be exposed.

Based on PSAR Section 5.2.4.1, Evaluation of the Design Basis, specific functional requirements are not assigned here for the defense-in-depth SSCs, rather, the SSCs shall be operated as required in Table 6-2. Detailed design descriptions for the defense-in-depth SSCs may be found in Chapter 4, and the applicable Systems Design Descriptions (SDDs).

6.4.5.2 Defense-In-Depth SSC Operation

Defense-in-depth SSCs are listed in Table 6-1. The applicable SDDs define defense-in-depth SSCs, describe their intended safety functions, and specify the requirements for design, operation, maintenance, testing, and calibration. WIPP procedure WP 04-AD3001, Facility Mode Compliance [4], shall be implemented, and maintained to ensure that defense-in-depth SSCs are operated as required during each facility mode as described in Table 6-2.

If any of the defense-in-depth SSCs fails to operate (when required), or becomes unavailable during Waste Handling operations, or must be taken out of service for maintenance or repair, Waste Handling operations shall be stopped, and the area shall be placed in the Waste Storage/Disposal Mode. Waste Handling operations shall not resume until all defense-in-depth SSCs required for Waste Handling Mode are capable of being operated, as required.

The defense-in-depth SSCs operational requirements ensure that important defense-in-depth SSCs are operated as required during Waste Handling Mode in the surface or underground, to provide protection for the "most likely" waste handling accidents identified in Section 5.2.3:

1. RH2, Fire in the WHB;
2. NC1, Fire in the Hot Cell;
3. RH4-B, LOC in the Underground (waste movement);
4. NC3-A, LOC in the WHB (dropped object on waste material in Hot Cell);
5. NC3-B, LOC in the WHB (dropped object on waste material outside Hot Cell);
6. NC3-C, LOC in the WHB (dropped drum or facility canister in Hot Cell)
7. NC3-D, LOC in the WHB (dropped drum or facility canister outside Hot Cell);
8. NC3-E, LOC in the WHB (puncture of drum in Hot Cell);
9. NC3-F, (hazardous event 12E-3) LOC in the WHB (puncture of drum or facility canister outside Hot Cell); and
10. NC4, LOC in the Underground (waste movement)

For natural phenomenon events:

1. RH6, Design Basis Earthquake;
2. RH7, Design Basis Tornado;
3. NC7, Seismic Event;
4. NC8, Tornado Event;

And for less likely operational accidents evaluated to be beyond extremely unlikely identified in Section 5.2.3:

1. RH1, Fire in the Underground;
2. RH3, LOC in the WHB;
3. RH4-A, LOC in the Underground (waste hoist failure);
4. RH5, Fire Followed by Explosion in the Underground;
5. NC2, Fire in the Underground (same as and bounded by RH1);
6. NC3-C, (hazardous events 10B-1) LOC in the WHB (dropped drum or canister in Hot Cell);
7. NC3-F, LOC in the WHB (puncture of drum or canister outside Hot Cell);

8. NC3-G, LOC in the WHB (puncture of 10-160B cask in RH Bay);
9. NC3-H, LOC in the WHB (dropped 10-160B cask in RH Bay);
10. NC4, LOC in the Transfer Cell or Underground (waste hoist failure and Transfer Cell); and
11. NC6, Fire followed by explosion in the Underground (same as and bounded by RH5)

As discussed, if any of the defense-in-depth SSCs fail to operate (when required), or become unavailable during RH Waste Handling operations, Waste Handling operations shall be stopped, and the facility shall be placed in the Waste Storage/Disposal Mode. Waste Handling operations shall not resume until the required defense-in-depth SSCs are capable of being operated as required.

During Waste Storage/Disposal Mode in the WHB and/or underground, the defense-in-depth SSCs operational requirements ensure that important defense-in-depth SSCs are operated as required to provide protection for less likely operational accidents identified in Section 5.2.3 for natural phenomenon events: (1) RH6 and NC7, seismic and (2) RH7 and NC8, tornado.

It should be noted that the likelihood of RH1, RH3, RH4-A, RH5, NC2, NC3-C, F, G, H and NC6 were evaluated in Section 5.2.3 to be beyond extremely unlikely. As such, for the Waste Storage/Disposal Mode, if any of the required defense-in-depth SSCs fail to operate (when required) or become unavailable, no specific actions are identified other than to perform corrective maintenance on the affected equipment in a timely manner.

A summary of the applicability of defense-in-depth SSCs in relation to the mode definitions is presented in Table 6-2.

This page intentionally blank

6.5 Design Features

The Design Features of the WIPP Facility are described in Chapter 4 of the PSAR.

This page intentionally blank

6.6 Interface TSRs

The WIPP Facility does not have interfacing TSRs from other facilities.

References for Chapter 6

1. DOE Order 5480.22, Technical Safety Requirements, September, 1992.

2. 10 CFR 830.205, Technical Safety Requirements, January, 2001.

3. DOE/WIPP-Draft 23-3123, Remote-Handled Waste Acceptance Criteria for the Waste Isolation Pilot Plant.

4. WP 04-AD3001, Facility Mode Compliance

5. DOE/WIPP-DRAFT-3174, Attachment 2, Accident Analysis For RH 10-160B Cask Processing.

Table 6-1, Summary of Defense-In-Depth Functions and Defense-in-Depth Features Important to Accident Scenarios Page 1 of 15

Accident	Defense-In-Depth Function	Defense-in-Depth Feature	TSR Control (AC)	Type of Feature (SSC or Administrative Control (AC)
RH1 Fire in the Underground	Primary confinement	Vented DOT Type A, or equivalent, waste canister	5.9.10, 5.9.12	SSC (Passive)
	Secondary confinement	Underground ventilation exhaust system Underground ventilation exhaust HEPA filters	5.9.1 5.9.1	SSC(Active) SSC(Active)
	Hydraulic oil reservoirs on HERE designed with a volume of $\leq$ 20 gallons and to minimize leaks	HERE design	5.9.1	SSC(Passive)
	Fuel tank on forklift designed to minimize leaks	Forklift and forklift fuel tank design	5.9.1	SSC(Passive)
	No other vehicle movement allowed in the waste transport route during RH waste handling in the underground	Waste handling procedures	5.9.5	AC
	There is no other facility cask containing RH waste canisters or CH waste drums in the path of the forklift when facility cask containing RH canisters are processed in the underground	Waste handling procedures	5.9.5	AC
	Forklift operated to prevent failure resulting in an uncontrolled movement of the forklift	Operator training and qualifications	5.9.6	AC
	Operations performed with spotter present	Pre-op checks/inspections	5.9.7	AC
	Throughput of waste canisters is 208/year which translates to 208 forklift operations per year	AOP Review	5.9.15	AC
	Provide facility emergency response to the event (notification, evacuation, direct response)	WIPP Emergency Management Program	5.9.8	AC

Table 6-1, Summary of Defense-In-Depth Functions and Defense-in-Depth Features Important to Accident Scenarios Page 2 of 15

Accident	Defense-In-Depth Function	Defense-in-Depth Feature	TSR Control (AC)	Type of Feature (SSC or Administrative Control (AC)
RH2 Fire in the WHB	Primary confinement	Vented DOT Type A or equivalent RH waste canister	5.9.10 5.9.12	SSC (Passive)
	Secondary confinement	Waste Handling Building (WHB) structure WHB RH HVAC System WHB HEPA filters	5.9.1 5.9.1 5.9.1	SSC (Passive) SSC (Active) SSC (Passive)
	The facility cask transfer car located >6 ft from the catch pans for the hydraulic unit of the facility cask rotating device.	Facility cask transfer car location and design	5.9.1	SSC (Passive)
	Facility cask rotating device hydraulic unit has an oil reservoir volume of <40 gal, the hydraulic oil catch pans have a capacity of ≥45 gal, and the hydraulic oil reservoir is designed to minimize leaks	Facility cask rotating device design	5.9.1	SSC(Passive)
	Limitations on waste canister radionuclide and fissile inventory and hazardous waste characteristics	WIPP Waste Acceptance Criteria (WAC)	5.9.12	AC
	Provide facility emergency response to the event (notification, evacuation, direct response)	WIPP Emergency Management program	5.9.8	AC
NC1 Fire in the Hot Cell	The facility shall limit combustibles in the Hot Cell	Fire Protection program	5.9.16	AC
	The facility shall provide regularly scheduled inspections to ensure that the combustibles are maintained at an acceptable level	Fire Protection program	5.9.16	AC
	The facility shall limit the ignition sources in the Hot Cell	Fire Protection program	5.9.16	AC
	The facility shall provide preventative maintenance of the electrical equipment to ensure proper operation	Maintenance program	5.9.3	AC

Table 6-1, Summary of Defense-In-Depth Functions and Defense-in-Depth Features Important to Accident Scenarios Page 3 of 15

Accident	Defense-In-Depth Function	Defense-in-Depth Feature	TSR Control (AC)	Type of Feature (SSC or Administrative Control (AC)
NC1 Fire in the Hot Cell continued	Primary confinement	Facility canister design (including lid)	5.9.1	SSC (Passive)
	Secondary confinement	Waste Handling Building (WHB) structure (including Hot Cell) WHB Ventilation System	5.9.1 5.9.1	SSC (Passive) SSC (Active)
	The facility shall provide guidance in the event of a fire in the Hot Cell	Procedures and Training	5.9.5, 5.9.6	AC
	RH waste containers accepted into the facility shall be noncombustible, vented, and meet DOT Type A or equivalent certification requirements	WIPP WAC	5.9.12	AC
	No explosive or compressed gasses are permitted in the waste	WIPP WAC	5.9.12	AC
	Warning to personnel of excessive temperatures in the Hot Cell	Thermal detector	5.9.1	SSC (Active)
	Procedures and training to ensure waste drums/ canister integrity	Waste canister/drum integrity	5.9.10	AC
	Operators shall ensure Cask Unloading Room (CUR) shield door is closed	Procedures and Training	5.9.5, 5.9.6	AC
	Operators shall ensure that Hot Cell/ CUR shield plugs are in place	Procedures and Training	5.9.5, 5.9.6	AC
NC5 Explosion Followed by Fire in the Hot Cell	Primary confinement	Facility canister design (including lid) Vented drums	5.9.1 5.9.10	SSC (Passive) SSC (Passive)
	Secondary confinement	WHB and Hot Cell ventilation system	5.9.1	SSC (Passive)

Table 6-1, Summary of Defense-In-Depth Functions and Defense-in-Depth Features Important to Accident Scenarios Page 4 of 15

Accident	Defense-In-Depth Function	Defense-in-Depth Feature	TSR Control (AC)	Type of Feature (SSC or Administrative Control (AC)
NC5 Fire Followed by Explosion in the Hot Cell continued	Waste drums shall be vented Type A or equivalent certification and be noncombustible and contain no explosive or compressed gasses	WIPP WAC	5.9.12	AC
	Explosives or compressed gasses are not allowed in the waste shipped to WIPP	WIPP WAC	5.9.12	AC
	Operators shall ensure CUR shield door closed	Procedures and Training	5.9.5, 5.8.6	AC
	Operators shall ensure that Hot Cell/ CUR shield plugs are in place	Procedures and Training	5.9.5, 5.9.6	AC
	Procedures and training to ensure waste drum/canister integrity	Waste drum/canister integrity	5.9.10	AC
RH3 Loss of Confinement in the WHB	Primary confinement	Vented DOT Type A or equivalent waste canister	5.9.10, 5.9.12	SSC (Passive)
	Secondary confinement	WHB structure WHB RH HVAC system WHB HEPA filters	5.9.1 5.9.1 5.9.1	SSC (Passive) SSC (Active) SSC (Passive)
	Grapple hoist system designed to minimize failures resulting in an uncontrolled movement of the RH waste canister	Grapple hoist system design Configuration control Quality Assurance	5.9.1 5.9.1 5.9.4	AC AC AC
	Grapple hoist system maintained to prevent failure resulting in an uncontrolled movement of the hoist	Preventative maintenance Configuration Control Quality Assurance	5.9.3 5.9.1 5.9.4	AC AC AC

Table 6-1, Summary of Defense-In-Depth Functions and Defense-in-Depth Features Important to Accident Scenarios Page 5 of 15

Accident	Defense-In-Depth Function	Defense-in-Depth Feature	TSR Control (AC)	Type of Feature (SSC or Administrative Control (AC)
RH3 Loss of Confinement in the WHB continued	Grapple hoist system operated to prevent failure resulting in an uncontrolled movement of the hoist	Pre-op checks/inspections (Conduct of Ops) Operator training and qualification Waste handling procedures Hoisting and rigging practices	5.9.7 5.9.6 5.9.5 5.9.5	AC AC AC AC
	Limitations on waste container radionuclide and fissile inventory and waste characteristics	WIPP WAC	5.9.12	AC
	Provide facility emergency response to the event (notification, evacuation, direct response)	WIPP Emergency Management program	5.9.8	AC
	Shuttle car is designed to support the drop of waste canister from facility cask into the road cask	Shuttle car design	5.9.1	SSC (Passive)
	It is assumed that the facility cask loading grapple is as reliable or better that the TRUPACT crane system	Cask loading grapple system design Configuration control Quality Assurance Preventative maintenance	5.9.1 5.9.1 5.9.4 5.9.3	SSC (Passive) AC AC AC
	Grapple hoist system brakes for RH waste canister during facility cask loading are designed to engage upon loss of power and as such, hold the load, thus minimizing th probability of waste canister breach	Grapple hoist system design Pre-op checks/inspections (Conduct of Ops) Operator training and qualifications Waste handling procedures Hoisting and rigging practices	5.9.1 5.9.7 5.9.6 5.9.5 5.9.5	SSC (Active) AC AC AC AC
	The maximum height from which a waste canister can be dropped is $\leq$22 ft	Facility cask loading grapple system design	5.9.1	SSC (Passive)

Table 6-1, Summary of Defense-In-Depth Functions and Defense-in-Depth Features Important to Accident Scenarios Page 6 of 15

Accident	Defense-In-Depth Function	Defense-in-Depth Feature	TSR Control (AC)	Type of Feature (SSC or Administrative Control (AC)
RH3 Loss of Confinement in the WHB (continued)	Should an accident involving a breach of a waste canister occur, the plant design permits the immediate cessation of activity and isolation of the area where the breach occurs. Once isolation is achieved, there is no driving force within the waste or waste handling area that could result in a further release of the waste material	WIPP Emergency management program	5.9.8	AC
	Distance of the Grapple hoist operator from the dropped waste container is 15 ft	Facility Cask loading grapple system design	5.9.1	AC
	Throughput of waste canisters is 208yr	AOP review	5.9.14	AC
NC3 Loss of Confinement in the RH Bay and Hot Cell	Primary confinement	Vented DOT Type A or equivalent waste drums	5.9.1	SSC (Passive)
	Secondary confinement	WHB structure WHB RH HVAC system WHB HEPA filters	5.9.1 5.9.1 5.9.1	SSC (Passive) SSC (Active) SSC (Passive)
	Prevent operator errors when performing the tasks necessary to unload the drums from the 10-160B cask and place them in canisters for permanent storage	Procedures and Training	5.9.5, 5.9.6	AC
	Provide facility emergency response to the event (notification, evacuation, direct response)	WIPP Emergency management program	5.9.8	AC
	Provide radiation and air monitoring to protect facility personnel	Area Radiation Monitors (ARMs) and Continuous Air Monitors (CAMs)	5.9.1	SSC (Active)
	Provide protection to prevent direct radiation exposure and/or the spread of contamination	CUR shield door, Hot Cell shield valve, shield plugs and Hot Cell crane interlock	5.9.1	SSC (Active)

Table 6-1, Summary of Defense-In-Depth Functions and Defense-in-Depth Features Important to Accident Scenarios Page 7 of 15

Accident	Defense-In-Depth Function	Defense-in-Depth Feature	TSR Control (AC)	Type of Feature (SSC or Administrative Control (AC)
NC3 Loss of Confinement in the RH Bay and Hot Cell (continued)	Provide for inspections and maintenance (including preventative maintenance) to ensure proper operation of equipment	Maintenance program	5.9.3	AC
	All cranes, grapples, and hoists are designed for reliable operation	Crane/grapple design	5.9.1	SSC (Active)
	Shuttle car is designed to support the drop of waste canister from facility cask into the shielded insert	Shuttle car design	5.9.1	SSC (Passive)
	Limitations on waste canister radionuclide and fissile inventory and waste characteristics	WIPP WAC	5.9.12	AC
	Prevent dropping loaded facility canister into the Transfer Cell	Guide tubes Shuttle car design Impact limiter on floor	5.9.1 5.9.1 5.9.1	SSC (Passive) SSC (Passive) SSC (Passive)
	Prevent movement of shuttle car/ Hot Cell crane while lowering facility canister into the shuttle car	Shuttle car drive train and motor controller Shuttle car and Hot Cell shield valve interlock Hot Cell crane and shield valve interlock Torque limiter on Hot Cell shield valve	5.9.1 5.9.1 5.9.1 5.9.1	SSC (Active) SSC (Active) SSC (Active) SSC (Active)
	Operators shall ensure the CUR shield door is closed	Procedures and Training	5.9.5, 5.9.6	AC
	Operators shall ensure Hot Cell shield plugs are in place	Procedures and Training	5.9.1	AC
	Prevent the robotic are from causing damage to the canister during the contamination survey	Robotic arm design Force limiter on swipe arm Robotic arm collision detector	5.9.1 5.9.1 5.9.1	SSC (Active) SSC (Active) SSC(Active)

Table 6-1, Summary of Defense-In-Depth Functions and Defense-in-Depth Features Important to Accident Scenarios Page 8 of 15

Accident	Defense-In-Depth Function	Defense-in-Depth Feature	TSR Control (AC)	Type of Feature (SSC or Administrative Control (AC)
RH4-A&B Loss of Confinement in the Underground	Primary confinement	Vented DOT Type A or equivalent RH waste canister	5.9.10, 5.9.12	SSC (Passive)
	Secondary confinement	Underground ventilation exhaust system Underground ventilation exhaust HEPA filters Radiation monitoring system (active waste disposal room exit Alpha CAM for underground shift to filtration Central monitoring system (for actuation of underground shift to filtration only)	5.9.1 5.9.1 5.9.1 5.9.1	SSC (Active) SSC (Passive) SSC (Active) SSC (Active)
	RH waste handling equipment designed to prevent failure resulting in a dropped waste canister	Waste handling equipment design Configuration control Quality Assurance	5.9.1 5.9.1 5.9.4	SSC (Passive) AC AC
	RH waste handling equipment maintained to prevent failure resulting in a dropped waste canister	Preventative maintenance Configuration control Quality Assurance	5.9.3 5.9.1 5.9.4	AC AC AC
	Waste handling equipment operated to prevent failure resulting in a dropped waste canister	Pre-op checks/inspections (Conduct of Ops) Operator training and qualification Waste handling procedures Hoisting and rigging practice Operations performed with spotter present	5.9.7 5.9.6 5.9.5 5.9.5 5.9.5	AC AC AC AC AC
	Limitations on waste canister radionuclide and fissile inventory and waste characteristics	WIPP WAC	5.9.12	AC
	Provide facility emergency response to the event (notification, evacuation, direct response)	WIPP Emergency management program	5.9.8	AC

Table 6-1, Summary of Defense-In-Depth Functions and Defense-in-Depth Features Important to Accident Scenarios Page 9 of 15

Accident	Defense-In-Depth Function	Defense-in-Depth Feature	TSR Control (AC)	Type of Feature (SSC or Administrative Control (AC)
RH4-A&B Loss of Confinement in the Underground (continued)	Design of the facility cask transfer car, facility cask and waste shaft	Design of the facility cask, facility cask transfer car, and waste shaft	5.9.1	SSC (Passive)
	The facility cask is in a horizontal position and positioned with the greatest moment of inertia. It is held in place by trunnions and supports to keep it from moving	Facility cask and facility cask transfer car design	5.9.1	SSC (Passive)
	Maximum speed of the facility cask transfer car is 30 ft per minute	Facility cask transfer car design	5.9.1	SSC (Passive)
	Maintain configuration control of the waste hoist on which fault tree was based	Configuration control	5.9.1	AC
	Design of motor on the facility cask shield valve will be such that an inadvertent closure of the shield valve will not affect the containment integrity of the waste canister during its emplacement in a borehole	Shield valve and shield valve motor design Configuration control Quality Assurance	5.9.1 5.9.1 5.9.4	SSC (Passive) AC AC
	Design of the HERE hydraulic system will be such that the containment integrity of a misaligned waste canister is not affected during its emplacement in a borehole	Hydraulic system design Configuration control Quality Assurance	5.9.1 5.9.1 5.9.4	SSC (Passive) AC AC
	No other vehicle movement is allowed in the waste transport route during RH waste handling in the underground	Waste handling procedures	5.9.5	AC
	A spotter is present whenever forklift is used to transfer facility cask in the underground	Operator training and qualifications Waste handling procedures Operations performed with spotter present	5.9.6 5.9.5 5.9.5	AC AC AC

Table 6-1, Summary of Defense-In-Depth Functions and Defense-in-Depth Features Important to Accident Scenarios Page 10 of 15

Accident	Defense-In-Depth Function	Defense-in-Depth Feature	TSR Control (AC)	Type of Feature (SSC or Administrative Control (AC)
RH4-A&B Loss of Confinement in the Underground (continued)	The maximum height from which the waste canister can be dropped is ≤22 ft	Facility cask loading hoist design Configuration control Quality Assurance	5.9.1 5.9.1 5.9.4	SSC (Passive)
	Should an accident involving a breach of a waste canister occur, the plant design permits the immediate cessation of activity and isolation of the area where the breach occurs. Once isolation is achieved, there is no driving force within the waste or waste handling area that could result in a further release of waste material	WIPP Emergency Management program	5.9.8	AC
	The door to the waste hoist is not open until the conveyance is locked in position and the pivot rails are in place - prevents the drop of facility cask/waste canister into waste shaft	Waste handling procedures	5.9.5	AC
	Aggressive maintenance program includes post-maintenance functional testing (stroke testing) of all valves following a maintenance operation	Preventative maintenance program Maintenance procedures Post-maintenance testing requirements	5.9.3 5.9.3 5.9.3	AC AC AC
	Maximum test time for standby components is 24 hours	Waste handling procedures Operations checks/inspections	5.9.5 5.9.7	AC AC
	Mission time for the waste hoist is 1000 hrs/yr (7,000 round trips per year) which includes transfers of RH and CH waste to the underground	AOP review	5.9.14	AC
	Floor will be leveled prior to storage operations in a panel room in the underground	Ground control procedures	5.9.7	AC
	Maximum time to transfer one waste canister to the emplacement equipment in the underground is approximately 4 hours	Waste handling procedures	5.9.5	AC

Table 6-1, Summary of Defense-In-Depth Functions and Defense-in-Depth Features Important to Accident Scenarios Page 11 of 15

Accident	Defense-In-Depth Function	Defense-in-Depth Feature	TSR Control (AC)	Type of Feature (SSC or Administrative Control (AC)
RH4-A&B Loss of Confinement in the Underground (continued)	Waste hoist system is subjected to a series of thorough "pre-operational check" tests at the start of each eight hour shift. Operation of the waste hoist system does not begin until the tests are successfully completed. In the fault tree analysis the test interval is conservatively assumed to be three times greater or 24 hours. If the hoist system is to be operated more than one shift per day, or there is a change of operator, the hoist system will be removed from service and the same "Pre-operational check" tests will be performed at the start of each shift or for each operator change	Waste handling procedures Pre-op check/inspections Shift turnover procedures	5.9.5 5.9.7 5.9.7	AC AC AC
	Throughput of waste canisters is 208/yr which translates to 208 forklift operations per year	AOP review	5.9.14	AC
RH5 Fire Followed by Explosion in the Underground	Primary confinement	Vented DOT Type A, or equivalent, waste canister	5.9.10, 5.9.12	SSC (Passive)
	Secondary confinement	Underground ventilation exhaust system Underground ventilation exhaust HEPA filters	5.9.1 5.9.1	SSC(Active) SSC(Passive)
	Hydraulic oil reservoirs on HERE designed with a volume of $\leq$ 20 gallons and to minimize leaks	HERE design	5.9.1	SSC(Passive)
	Fuel tank on forklift designed to minimize leaks	Forklift and forklift fuel tank design	5.9.1	SSC(Passive)
	Forklift operated to prevent failure resulting in a damaged/dropped waste canister	Operator training and qualifications Waste handling procedures Forklift operations for RH canisters performed with spotter present	5.9.6 5.9.5 5.9.5	AC AC AC

Table 6-1, Summary of Defense-In-Depth Functions and Defense-in-Depth Features Important to Accident Scenarios Page 12 of 15

Accident	Defense-In-Depth Function	Defense-in-Depth Feature	TSR Control (AC)	Type of Feature (SSC or Administrative Control (AC)
RH5 Fire Followed by Explosion in the Underground (continued)	No other vehicle movement allowed in the waste transport route during RH waste handling in the underground	Waste handling procedures	5.9.5	AC
	There is no other facility cask containing RH waste canisters or CH waste drums in the path of the forklift when facility cask containing RH canisters are processed in the underground	Waste handling procedures	5.9.5	AC
	Throughput of waste canisters is 208/year which translates to 208 forklift operations per year	AOP Review	5.9.15	AC
	Provide facility emergency response to the event (notification, evacuation, direct response)	WIPP Emergency Management Program	5.9.8	AC
RH6 Seismic Event (DBE)	Primary confinement	Vented DOT Type A, or equivalent, waste canister	5.9.10, 5.9.12	SSC (Passive)
	Secondary confinement	Underground ventilation exhaust system Underground ventilation exhaust HEPA filters Radiation Monitoring system (active waste disposal room exit alpha CAM for underground shift to filtration Central Monitoring System (for actuation of underground shift to filtration only)	5.9.1 5.9.1 5.9.1 5.9.1	SSC(Active) SSC(Passive) SSC (Active) SSC (Active)
	Grapple hoist is designed so that it would not drop or affect the containment integrity of the waste canister when transferring waste canister from the road cask into the facility cask during and after a DBE	Grapple hoist system design	5.9.1	SSC(Active)

Table 6-1, Summary of Defense-In-Depth Functions and Defense-in-Depth Features Important to Accident Scenarios Page 13 of 15

Accident	Defense-In-Depth Function	Defense-in-Depth Feature	TSR Control (AC)	Type of Feature (SSC or Administrative Control (AC)
RH6 Seismic Event (DBE) (Continued)	Transfer Cell shuttle car is designed such that it would not drop or affect the containment integrity of the waste canister during and after a DBE	Shuttle car design	5.9.1	SSC(Passive)
	Transfer Cell equipment is designed such that it would not affect the containment integrity of the waste canister during and after a DBE	Transfer Cell and Transfer Cell equipment design	5.9.1	SSC (Passive)
	Limitations on waste canister radionuclide and fissile inventory and waste characteristics	WIPP WAC	5.9.12	AC
	Provide facility emergency response to the event (notification, evacuation, direct response)	WIPP Emergency Management program	5.9.8	AC
NC7 Seismic Event for 10-160B Cask Processing	Secondary confinement	WHB (including Hot Cell) is DBE qualified 140/25 ton crane is DBE qualified Hot Cell crane is DBE qualified PAR®Manipulator is DBE qualified Central Monitoring System (for actuation of underground shift to filtration only).	5.9.1 5.9.1 5.9.1 5.9.1 5.9.1	SSC (Passive) SSC (Active) SSC (Active) SSC (Active) SSC (Active)
	The 10-160B cask is designed to withstand the effects of DBE without the release of waste contents	Road cask design	5.9.1	SSC(Passive)
	Provide facility emergency response to the event (notification, evacuation, direct response)	WIPP Emergency Management program	5.9.8	AC
	There shall be documented controls pertaining to returning the facility to normal operation following a seismic event	Recovery plan	5.9.17	AC

Table 6-1, Summary of Defense-In-Depth Functions and Defense-in-Depth Features Important to Accident Scenarios Page 14 of 15

Accident	Defense-In-Depth Function	Defense-in-Depth Feature	TSR Control (AC)	Type of Feature (SSC or Administrative Control (AC)
RH7 Tornado Event (DBT) (continued)	Primary confinement	Vented DOT Type A or equivalent waste canister	5.9.10	SSC (Passive)
	Secondary confinement	Underground ventilation exhaust system Underground ventilation exhaust system HEPA filters Radiation monitoring system (active waste disposal room exit alpha CAM for underground shift to filtration) Central monitoring system (for actuation of underground shift to filtration only)	5.9.12 5.9.1 5.9.1 5.9.1 5.9.1	SSC (Passive) SSC (Active) SSC (Passive) SSC (Active) SSC (Active)
	The road cask is designed to withstand the effects of high wind, tornado, tornado driven missiles, and overturning without the release of waste contents	Road cask design	5.9.1	SSC (Passive)
	The WHB (including the crane and grapple hoist used for RH waste handling) and waste hoist are protected by the WHB structure, and the tornado doors	WHB (including tornado doors) design	5.9.1	SSC(Passive)
	Limitations on waste canister radionuclide and fissile inventory and waste characteristics	WIPP WAC	5.9.12	AC
	Provide facility emergency response to the event (notification, evacuation, direct response)	WIPP Emergency management program	5.9.8	AC

Table 6-1, Summary of Defense-In-Depth Functions and Defense-in-Depth Features Important to Accident Scenarios Page 15 of 15

Accident	Defense-In-Depth Function	Defense-in-Depth Feature	TSR Control (AC)	Type of Feature (SSC or Administrative Control (AC)
NC8 Tornado Event for 10-160B Cask Processing (DBT)	Primary confinement	Vented DOT Type A or equivalent waste canister	5.9.10 & 5.9.12	SSC (Passive)
	Secondary confinement	CMR (for weather monitoring)	5.9.7	AC
	The WHB (including Hot Cell) and waste hoist are protected by the WHB structure, and the tornado doors	WHB (including tornado doors) design	5.9.1	SSC (Passive)
	Provide facility emergency response to the event (notification, evacuation, direct response)	WIPP Emergency management program	5.9.8	AC
	The 10-160B cask meets DOT Type B shipping container certification requirements	Shipping cask design	5.9.1	SSC (Passive)

Table 6-2, Summary of Applicability of Defense-In-Depth SSCs to WIPP Modes

Defense-In-Depth SSCs	Waste Handling Mode		Waste Storage/Disposal Mode	
	WHB	Underground	WHB	Underground
WHB RH facilities HVAC System (excluding Hot Cell ventilation system unless waste is being processed or stored in the Hot Cell)	X		X*	
Waste Hoist (including Brake System - when required to transport waste)	X	X		
WASTE HANDLING equipment (including the facility cask loading grapple, grapple hoist system including brakes, RH bay bridge crane, forklifts, HERE, facility cask rotating device, facility cask transfer car, lifting fixture, etc.) as required during WASTE HANDLING operations only)	X	X		
WHB structure (including Hot Cell with thermal detector) and tornado Doors	X		X*	
Underground Ventilation and Filtration System		X		X
Radiation Monitoring System (active waste disposal room exit alpha Continuous Air Monitor [CAM] for underground shift to filtration)		X		X
Devices to restrict operations including Shield Door and Crane Interlock, Crane and Hot Cell Shield Valve Interlock, Torque limiter on shield valve motor, Force Limiter on Swipe Arm, and Robotic Arm Collision Detector	X			
Central Monitoring System to support underground shift to filtration		X		X

*Note that no defense-in-depth operational requirements apply to the WHB when no WASTE is present

Following failure of a required SSC, the facility will be placed in the WASTE Storage/Disposal Mode. During the time required to effect the required repairs, the facility is not in violation of the TSR.

RADIOLOGICAL AND HAZARDOUS MATERIAL PROTECTION
TABLE OF CONTENTS

SECTION TITLE PAGE NO.

7.1 Radiological Protection 7.1-1
7.1.1 Radiological Control Program and Organization 7.1-1
7.1.1.1 Radiological Control Program Objectives 7.1-1
7.1.1.2 Administrative Organization 7.1-2
7.1.2 ALARA Policy and Program 7.1-3
7.1.2.1 Policy Considerations 7.1-3
7.1.2.2 Design Considerations 7.1-4
7.1.2.3 Operational Considerations 7.1-4
7.1.3 Radiological Exposure Control 7.1-4
7.1.3.1 Radiological Protection Design Features 7.1-4
7.1.3.1.1 Plant Arrangement Designs for Keeping Exposures ALARA 7.1-4
7.1.3.1.2 Equipment and Component Designs for Keeping Exposures ALARA 7.1-8
7.1.3.1.3 Radiation Shielding 7.1-9
7.1.3.1.3.1 Design Objectives 7.1-9
7.1.3.1.3.2 Direct Radiation Sources 7.1-9
7.1.3.1.3.3 Design Description 7.1-9
7.1.3.1.3.4 Method of Shielding Analysis 7.1-10
7.1.3.2 Radiological Practices 7.1-11
7.1.3.2.1 Radiation Safety Training 7.1-11
7.1.3.2.2 Radiological Control Procedures 7.1-11
7.1.3.2.3 Radiological Control Facilities 7.1-15
7.1.3.2.4 Radiological Control Equipment 7.1-15
7.1.3.2.5 Radiological Posting 7.1-16
7.1.3.2.6 Radiation Protection Instrumentation 7.1-16
7.1.4 Dose Assessment for Normal Operations 7.1-19
7.1.4.1 On-site Dose Assessment 7.1-19
7.1.4.2 Off-site Dose Assessment 7.1-19
7.1.4.3 Effluent Sampling Systems/ Monitoring 7.1-19
7.1.4.4 Underground Monitoring Systems 7.1-20
References for Section 7.1 . . . . . 7.1-21

7.2 Hazardous Material Protection 7.2-1
7.2.1 Hazardous Material Sources 7.2-1
7.2.2 Hazardous Material Exposure Assessment for Normal Operations 7.2-1
7.2.2.1 Off-site Exposure Assessment 7.2-1
7.2.2.2 On-site Exposure Assessment 7.2-2
7.2.3 Industrial Hygiene Program 7.2-2
7.2.3.1 ALARA Policy 7.2-2
7.2.3.2 Hazard Identification, Evaluation, and Elimination 7.2-3
7.2.3.3 Chemical Management 7.2-3
7.2.3.4 Air Monitoring 7.2-4
7.2.3.4.1 Non-radioactive Air Contaminants 7.2-4
7.2.3.4.2 Diesel Emissions 7.2-4
7.2.3.5 Workplace Monitoring 7.2-4

RADIOLOGICAL AND HAZARDOUS MATERIAL PROTECTION
TABLE OF CONTENTS

SECTION TITLE PAGE NO.

7.2.3.6 Occupational Medical Program 7.2-5
7.2.4 Environmental Monitoring 7.2-5
7.2.4.1 Airborne Particulate 7.2-6
7.2.4.2 Soil Samples 7.2-6
7.2.4.3 Groundwater 7.2-6
7.2.4.4 Surface Water 7.2-6
7.2.4.5 Sediments 7.2-7
7.2.4.6 Biota Samples 7.2-7
7.2.5 Volatile Organic Compound (VOC) Monitoring 7.2-7
References for Section 7.2 . . . . . 7.2-9

RADIOLOGICAL AND HAZARDOUS MATERIAL PROTECTION
LIST OF TABLES

TABLE **TITLE** **PAGE NO.**

Table 7.1-1, Dose Estimates by Task and Worker Type for the 72B RH Waste Process . . 7.1-23
Table 7.1-2, Dose Estimates by Task and Worker Type for the 10-160B RH Waste Process 7.1-24
Table 7.2-1, Maximum Occupational and Public Exposure From Underground Waste VOC Emissions 7.2-10

This page intentionally left blank

RADIOLOGICAL AND HAZARDOUS MATERIAL PROTECTION

7.1 Radiological Protection

This section discusses (1) the radiological hazards to the worker and off-site public as a result of RH TRU waste handling and emplacement activities, (2) the WIPP radiological control program and organization, and (3) the WIPP "As Low As Reasonably Achievable" (ALARA) policy and program. Waste containers accepted for disposal at the WIPP are surveyed prior to release from the generator sites, and are required to meet the 10 CFR 835[1] external contamination limits. Therefore, WIPP normal operations do not involve or entail any planned or expected releases of airborne radioactive materials to the workplace or the environment.

As part of normal operations activities, the shipping containers, although having met the 10 CFR 835[1] limits prior to shipping, are closely inspected for damage and surveyed for radiation and radioactive contamination prior to unloading.

7.1.1 Radiological Control Program and Organization

7.1.1.1 Radiological Control Program Objectives

The objective of the radiological control program is to ensure the exposure of employees and the general public to radiation and radioactive materials is within the guidelines of 10 CFR 835[1]; DOE-STD-1098-99[2], DOE G-441.1-2[3] 40 CFR Part 191, Subpart A;[4] 40 CFR 61, Subpart H;[5] DOE Orders 5400.5,[6] and 6430.1A[7] respectively, and that such exposures are kept ALARA. These objectives are met by ensuring that:

- ALARA Design Reviews are conducted to ensure facility changes comply with 10 CFR 835, Subpart K, Design and Control[12].
- Shipments of radioactive material are handled in accordance with Remote-Handled Waste Acceptance Criteria (RH WAC)[9] limitations, U.S. Department of Transportation (DOT) regulations,[10] and WIPP internal operating procedures.
- Shielding, posting, and access control are used to reduce direct radiation exposure from external radiation.
- Containment and ventilation engineering controls are designed to reduce internal exposures during normal operations.
- Areas where the radioactive waste is unloaded are monitored with alarm capabilities for airborne radioactivity.
- Personnel receive a level of radiation protection training appropriate to their assignments.
- Area Radiation monitors are utilized to provide indication of waste radiation exposure rates as processing progresses through the various phases of RH waste handling.

- Appropriate access/egress control techniques and radiological surveys of personnel and equipment are used to prevent the spread of external contamination.

- A source control program is in place to minimize the potential for the spread of contamination, unnecessary exposure to personnel, loss, theft, sabotage, or improper disposal of radioactive sources.

- A respiratory protection program is in place, and respiratory protective equipment will be used during abnormal activities where personnel could be exposed to high surface contamination and/or airborne radioactivity.

- Instruments and equipment are properly calibrated so that accurate radiation, contamination, and airborne radioactivity surveys can be performed.

- Radiological work procedures and instructions provide for an ALARA review prior to commencement of work, for jobs in which radiation and/or radioactive contamination are expected to exceed trigger levels established by the WP 12-5, WIPP Radiation Safety Manual.[11]

- Appropriate personnel dosimetry devices are supplied, and a radiation exposure record system is maintained.

- An internal dose-assessment program (whole-body counting and bioassay) is in place.

- Radiological Protection management is notified of any unusual or unexpected radiological conditions.

- Every radiological worker is given the authority to stop radiological work if there is evidence that radiological controls are being compromised.

- An effluent and environmental monitoring and/or sampling program is in place to detect releases to the environment, and to verify that facility releases are maintained at a minimum.

- The radiological control program is conducted in accordance with written and approved procedures.

- Access to areas where RH waste has been handled will be controlled in accordance with 10 CFR 835.502[12].

7.1.1.2 Administrative Organization

Radiation safety responsibilities are shared by Operations and the Safety and Health (S&H) Department. The Sections of the S&H Department are Industrial Safety and Hygiene, Nuclear Safety, WIPP Laboratories, and Radiation Safety & Emergency Management. The management organization described in the following paragraphs implements the radiological control program.

Safety and Health (S&H) - The Manager of S&H has responsibility for all activities concerning industrial safety and radiation protection of employees and the general public. With regard to radiological control, the S&H Manager is responsible for the training of radiation workers and Radiological Control Technicians, emergency planning, and the ALARA program. The S&H Manager is also responsible for coordinating these activities with cognizant governmental agencies. Within the organization of the Management and Operating Contractor, the Radiation Safety & Emergency Management Manager reports to the Manager of S&H.

Operational and Programmatic Radiological Safety

Operational Radiation Safety is the responsibility of the CH Radiological Control (CHRC) Manager. The CHRC Manager maintains the radiological safety of the plant by regularly evaluating and assessing surface contamination, radiation levels, and airborne radioactivity levels in radiological work area with respect to approved limits. In addition, the CHRC Manager directs operational health physics activities and ensures the performance monitoring of routine and special WIPP facility operations.

Programmatic Radiation Safety is the responsibility of the Radiation Safety and Emergency Management (RS&EM) Manager. The RS&EM Manager establishes training programs for qualification and re-qualification of Radiological Control Technicians and approving other radiological training programs consistent with 10CFR835 [1] and DOE Orders. The RS&EM Manager approves radiological procedures and is required to review them to ensure their adequacy. The ALARA Coordinator and radiological engineering activities are also directed by the RS&EM Manager.

The RS&EM Manager and designees have the authority to stop operations when an actual or impending loss of radiological control is identified. In addition, because of the importance of radiation safety, the RS&EM Manager has a direct line of communication to the General Manager in matters of radiation safety.

Minimum qualifications for radiological control program personnel are in accordance with applicable DOE Orders and Guidance.

Dosimetry - The RS&EM Manager is responsible for operating and maintaining a personnel dosimetry program to determine radiation exposure to employees and visitors. In addition, the RS&EM Manager is responsible for implementing and operating the internal dosimetry program. The RS&EM Manager has the authority to remove from further exposure, employees who have either reached or exceeded the established administrative radiation exposure limits or not demonstrated their continuing understanding of, or compliance with, the WIPP radiological control program.

7.1.2 ALARA Policy and Program

7.1.2.1 Policy Considerations

It is the firm commitment of the WIPP management that occupational radiological exposures are kept ALARA. This policy, as reflected in administrative programs and procedures established in accordance with 10 CFR 835,[1] and DOE G- 441.1-2[3] ensures that the design basis of the WIPP facility will maintain individual occupational radiation exposures to an ALARA level of less than 1 rem (10 mSv) per year, per person. A site-specific administrative control level may be established at less than 1 rem (10 mSv) per year, per person, in accordance with WP 12-5, WIPP Radiation Safety Manual.[11] ALARA issues are reviewed by the WIPP ALARA Committee. The ALARA Committee and the overall radiological control program are operated in accordance with WP 12-2, WIPP ALARA Program Manual.[14] The ALARA program provides for pre and post job reviews of work which exceeds pre-set triggers as well as routine reviews of programs and procedures which involve control of radiation exposures.

7.1.2.2 Design Considerations

The ALARA techniques applied to the WIPP facility design were based on DOE exposure guide DOE/ EV/1830-T5,[?] as appropriate for this first-of-a-kind facility. Future design modifications will be in accordance with 10 CFR 835,[1] DOE G-441.1-2[3], DOE O 420.1,[15] Facility Safety, and DOE O 430.1A,[16] Life-Cycle Asset Management, and other codes, standards, and orders applicable at the time of modification. Chapter 4 presents details of plant design and operations.

The ALARA criteria were applied during the design of the plant through a series of design reviews by nuclear and health physics specialists from the responsible Architect-Engineer organization. During the operational disposal-phase, ensuring exposures are kept ALARA is the responsibility of all levels of management. Operationally, the manager for RH waste handling is responsible for developing and implementing procedures and the operation of equipment to ensure personnel exposures are maintained ALARA.

Changes to the RH facility and equipment will follow the Engineering Change Order process in accordance with WP 09-CN3007.[17] Completion of Attachment 1 of WP 09-CN3007 will cause the cognizant engineer to perform an evaluation of the need for ALARA review in accordance with Attachment 4, ALARA Screening Checklist, of WP 12-2, WIPP ALARA Manual[14].

An ALARA design review has been conducted for the facility changes for the Remote Handled waste processes. This review was conducted in accordance with DOE G-441.1-2[3].

7.1.2.3 Operational Considerations

Radiological exposure to plant personnel during operations will be kept ALARA by continued review of operations and training. Radiological Control Technicians (RCTs) will participate directly with RH waste handling and provide up to date information to Waste Handling Operators as to radiation levels and locations where exposures can be minimized. The WIPP ALARA Program is described in the WIPP ALARA Manual, WP 12-2.[14]

The Manager of S&H, or designees, will monitor performance of the waste handling operations by reviewing exposures, procedures, and incident reports, and recommending corrective action when required. The DOE and the Management and Operating Contractor (MOC) will supplement this program through periodic audits of exposure records and procedures, as well as investigations of all incidents.

7.1.3 Radiological Exposure Control

7.1.3.1 Radiological Protection Design Features

7.1.3.1.1 Plant Arrangement Designs for Keeping Exposures ALARA

The design of the RH systems and facilities have been reviewed for ALARA considerations using the ALARA Design Review format specified in WP 12-2[11].

<u>Facility Arrangement</u> - For radiological control purposes, the areas in the WIPP facility to which access is managed to protect individuals from exposure to radiation and/or radioactive materials are identified as Controlled Areas, and are administrated in accordance with the WP 12-5.[11] The Controlled Areas are segregated from other operating areas by physical barriers (e.g., tape, rope, fences, walls, bulkheads).

The surface Controlled Areas are primarily located in and around the Waste Handling Building (WHB), and are separated from other areas by a fence and walls (Figure 4.1-2).

A Controlled Area will be established in the underground disposal area during disposal operations. Engineering control features are incorporated in the arrangement of the underground disposal area. The disposal area is isolated from the construction area by physical barriers or postings and separate ventilation flow paths discussed in Chapter 4. The disposal areas are normally excavated in groups of rooms called panels, as indicated in Figure 4.1-3. Personnel entering Controlled Areas will have completed General Employee Radiological Training (GERT) or be escorted. In this way, personnel in Controlled Areas will have adequate knowledge not to enter areas requiring further training or monitoring.

Access control and personnel traffic patterns are considered in the plant layout to minimize the potential for spreading contamination, and to minimize personnel radiation exposure.

Waste Handling Building - General Arrangement - A Controlled Area will be established in the WHB, as required to support Waste Handling operations. All entrances to Controlled Areas will be posted and personnel must either have completed GERT or be escorted by an individual who has completed GERT. Individuals who have completed this level of training are knowledgeable in the requirements for entry and following the requirements of the radiological areas within the Controlled Areas.

Air locks are located between areas with either different levels of contamination potential or large pressure differentials. The ventilation system and air locks act to mitigate the spread of contamination by maintaining pressure differentials between radiological areas. This is done to ensure that any leakage is directed into areas with higher potentials for contamination.

RH TRU Waste Handling Area Arrangement - Shielded road casks containing RH waste canisters and 55-gal drums will arrive at the WIPP Facility on a tractor-trailer and will be received into the WHB through an entry on the RH side. The RH side of the WHB contains two major areas for handling RH mixed waste: the RH bay and the transfer complex. The transfer complex is divided into four areas designed for specific functions: the Cask Unloading Room (CUR) , the Transfer Cell, the Hot Cell, and the Facility Cask Loading Room.

The RH bay is a high-bay area for shielded road cask receiving and subsequent handling operations. For contamination control, the WHB ventilation system is designed to maintain negative pressures where postulated accidents could occur. This means the Transfer Cell will be at a lower pressure than either the RH bay or the Facility Cask Loading Room.

Upon arrival, radiological surveys, security checks, and shipping documentation reviews will be performed to ensure compliance with Department of Transportation requirements. Upon completion of these checks, the hazardous waste manifest will be signed to release the driver.

Following shielded road cask inspections, the cask will be moved into the RH bay. Once the trailer is in position, more detailed exposure rate surveys will be conducted where work will be performed around the cask.

72B Road Cask Handling

After the radiological surveys are completed, the impact limiters will be removed from the shielded road cask while it is on the trailer. The newly exposed areas previously covered by the impact limiters will then be surveyed for dose rates and surface contamination. The shielded road cask will be unloaded from the trailer using the 140/25-ton bridge crane and rotated to a vertical position, then placed on the road cask transfer car. The road cask transfer car will then move the road cask to the work platform. The work platform provides personnel access to the head area of the road cask for unloading and shipment preparations, including conducting radiological surveys, performing physical inspections or minor maintenance, and decontamination, if necessary. As the outer lid is removed, dose rate and contamination surveys will be performed. As part of the outer lid removal process, pressure is equalized through a HEPA filter assembly. The filter is verified free of contamination before the lid is unbolted.

When activities at the cask preparation stand are complete, the road cask transfer car moves the shielded road cask into the concrete-shielded CUR. The CUR 25-ton crane and cask lift fixture will lift the road cask to clear the transfer car so the empty car can be removed from the room. The 25-ton crane positions the road cask over the CUR floor shield valve.

The floor shield valve when closed separates the CUR from the Transfer Cell. The floor shield valve is interlocked with the Hot Cell and Transfer Cell shield valves in a manner that allows only one to be open. These Interlocks ensure that differential pressures are maintained to ensure any contamination is maintained within the RH transfer complex.

The floor shield valve will be opened, and the road cask lowered onto the awaiting shuttle car in the Transfer Cell. After disconnecting and raising the lift fixture, the floor valve will be closed. After the road cask has been lowered onto the shuttle car, the shuttle car will position the road cask at the road cask inner vessel (IV) lid de-tensioner station. The robotic de-tensioner loosens the bolts on the IV lid (the bolts remain in the lid and are kept out of the bolt holes by springs). The shuttle car is then positioned so that the road cask is aligned directly under the Transfer Cell shielded ceiling valve in preparation for transferring the canister into the facility cask.

Using the Facility Cask Loading Room 6.25-ton grapple hoist, the inner cask lid will be removed and contamination smears obtained remotely. The smears are transported from the Transfer Cell to the location where the analysis is performed using a vacuum driven smear delivery system. After the smears have been counted, the lid will be lowered to a location next to the road cask. The waste canister pintle will be smeared and analyzed using the same system. The RH waste canister will be lifted by the grapple hoist from the road cask (through the open ceiling shield valve) into the vertically oriented facility cask. During the lift, smears will be taken to verify that the waste canister contamination levels are within WIPP criteria. If contamination is detected greater than 100 times the WIPP limit, the contaminated canister will be returned to the road cask and returned to the shipper. Also during its lifting from the road cask into the facility cask, the identity of the waste canister will be checked against that listed on the hazardous waste manifest and the WIPP Waste Information System (WWIS) to verify that the canister is suitable for emplacement.

After the waste canister has been transferred to the facility cask, the inner lid will be placed on the road cask. The road cask will be moved to the RH Bay where the inner lid will be removed and the internals surveyed for contamination. If a surface area of less than 6 sq. ft is found to be contaminated at levels less than 100 times the WIPP limit, it will be decontaminated. If contamination area greater than 6 sq. ft and/or levels greater than 100 times the WIPP limit is detected, the cask will be returned to the shipper for decontamination.

10-160B Road Cask Handling

After the radiological surveys are completed, the top impact limiter will be removed from the 10-160B shipping cask while it is on the trailer. As the road cask is lifted from the trailer using the 140/25-ton bridge crane, newly exposed areas will be surveyed for contamination and dose rates prior placement on the road cask transfer car. If water is found in the lower impact limiter, it will be pumped out and stored until an analysis shows that the activity is less than the DOE Derived Concentration Guide prior to disposal. Then the cask will be vented through a HEPA filter assembly. The HEPA filter assembly will be surveyed for surface contamination after the pressures have equalized. Operations will install the lid lift fixture and remove the road cask lid bolts.

After the cask lid is unbolted, the cask will be moved into the CUR, with the Hot Cell Shield Plug installed. The CUR shield door will be closed, the Hot Cell Shield Plugs removed and the road cask lid lifted into the Hot Cell. The contents of the cask will be lifted into the Hot Cell using the Hot Cell 15 ton crane.

Contamination surveys will be conducted as the10-160B cask is disassembled and its contents are being removed. Smears will be taken of the underside of the lid and on drums and carriage as they are brought into the Hot Cell.

The waste drums from the cask will be surveyed for contamination using manipulators which will take smears and place them in the shielded Transfer Drawer. The drawer allows the transfer of the smears out of the Hot Cell while maintaining shield integrity. After the drums have been surveyed and the identity of each drum verified, the lid will be placed on the 10-160B road cask and the Hot Cell shield plugs re-installed. The road cask will be moved to the RH Bay where the lid will be removed and the internals surveyed for contamination. If a surface area of less than 6 sq. ft is found to be contaminated at levels less than 100 times the WIPP limit, it will be decontaminated. If contamination area greater than 6 sq. ft and/or levels greater than 100 times the WIPP limit is detected, the cask will be returned to the shipper for decontamination. Once the drums are identified and surveyed clean, they will be placed in facility canisters and then transferred from the Hot Cell through the Hot Cell shield valve into the Transfer Cell. If contamination greater than 100 times the WIPP limit is detected, the drums will be repackaged and returned to the shipper.

The Hot Cell shield valve when closed separates the Hot Cell from the Transfer Cell. The Hot Cell shield valve is interlocked with the Cask Loading Room floor shield valve and Transfer Cell shield valves in a manner that allows only one to be open. These Interlocks ensure that differential pressures are maintained to ensure any contamination is maintained within the RH transfer complex.

The facility canister is placed into the shielded insert on the shuttle car. The shuttle car is then positioned so that the shielded insert is aligned directly under the Transfer Cell ceiling shield valve in preparation for transferring the facility canister into the facility cask. The Facility Cask Loading Room 6.25-ton grapple hoist is used to lift the facility canister from the shielded insert (through the open ceiling shield valve) into the vertically-oriented facility cask in the Facility Cask Loading Room.

Transfer to Facility Cask

The facility cask, located in the Facility Cask Loading Room, is connected to the floor mounted facility cask rotating device which rotates the facility cask from a horizontal to the vertical position. The required electrical and air connections are made to the facility cask. The telescoping port shield is raised to mate with the bottom of the facility cask and the shield bell is lowered to mate with the top shield

valve of the facility cask to ensure shielding continuity during the waste canister transfer. The operating console used for performing these operations is located behind a shadow shield in the north portion of the Facility Cask Loading Room.

Once the waste canister is loaded and the facility cask shield valves are closed, the facility cask will be rotated to the horizontal position. The facility cask will then be monitored for external dose rates. The door to the waste shaft will then be opened, accessing the waste hoist conveyance. The facility cask transfer car will be loaded onto the waste hoist conveyance and lowered to the waste shaft station underground.

Underground Facility Cask Handling

At the Underground waste shaft station, the facility cask will be moved from the waste hoist cage by the facility cask transfer car. A 41-ton forklift will be used to remove the cask from the transfer car and transport the cask to the disposal room. There the facility cask will be placed on the horizontal emplacement equipment, which will have been previously aligned with a horizontal hole bored into the room wall. The horizontal emplacement equipment will then insert the canister into the hole. A shield plug will then be inserted into the hole to provide radiation shielding. After the emplacement equipment is moved, radiation exposure rate surveys will be conducted around the shield plug and smears taken from the facility cask. Radiological postings will be used if required, based on these surveys.

Routine surveys will be conducted of the RH waste processing area and equipment to verify that there is no long-term buildup of contamination.

7.1.3.1.2 Equipment and Component Designs for Keeping Exposures ALARA

This section summarizes the design features used for general classes of equipment and major components. These classes of equipment are common to many of the plant systems. Therefore, the features employed to maintain exposures ALARA for each system are similar.

Waste Handling Equipment - Features to facilitate decontamination, such as smooth cleanable surfaces and the elimination of square corners and crevices, are incorporated in the handling equipment design, where practicable. Mechanical handling equipment is designed for easy replacement for decontamination and/or repair.

Forklifts are designed to transport the waste packages while minimizing the potential for accidents. They also ensure the effective securing of waste packages to minimize waste handling time.

Instruments - Whenever practical, instrumentation and control devices are located in low radiation areas and away from radiation sources. Instruments, that for functional reasons are located in areas with a relatively high radiation background, are designed for easy removal to areas with a lower radiation background for calibration or repair.

Lighting - Multiple electric lights are provided. Sufficient illumination is provided so that the loss of a single lamp does not require immediate entry and replacement of the defective lamp.

HVAC Equipment - The environmental control systems for areas with a potential for contamination are designed for contamination-free replacement of filter elements.

7.1.3.1.3 Radiation Shielding

7.1.3.1.3.1 Design Objectives

The objective of radiation shielding is to minimize the exposure of personnel to the radiation sources described below. Radiation shielding is one of the methods utilized to maintain the exposure of personnel to radiation ALARA.

7.1.3.1.3.2 Direct Radiation Sources

The direct radiation sources that are the bases for shielding design are categorized from RH TRU waste. The direct radiation sources described in this section use maximum expected values and conservative assumptions to ensure a conservative basis for radiation shielding design. The representative characteristics of these radiation sources are described below.

RH TRU Waste - RH waste composition is defined in DOE/CAO 95-1121.[18] This report classifies the waste into material types (e.g. plastic, soil, metal, etc.) And provides information on packaging materials and radionuclide inventory. Approximately 96.5 percent of the total RH-TRU activities is contributed by Cs-137, Sr-90, Pu-241, and Y-90. Thus, the remaining radionuclides contribute a very small fraction of the total curies for the repository.

7.1.3.1.3.3 Design Description

To meet the original shielding design objectives, the following general guidelines were used:

- Radiation shielding thicknesses must ensure that the dose rate due to uncollided and scattered radiation through the shield are less than the maximum levels specified for each design radiation zone. Shield wall thicknesses are shown in plant arrangement drawings.

- Principal shielding materials are ordinarily concrete/rebar, lead, steel, or salt. Shielding materials for viewing windows include leaded glass and mineral oil. Temporary shielding, such as lead blankets, bricks, or other materials may also be employed, as required, during maintenance or other operations.

- Temporary shielding for openings such as doors, hatches, windows, ventilation ducting, and piping should be designed to prevent radiation streaming. Penetrations through primary shielding are typically placed so that they do not provide a direct line through the shield wall to the radiation source. Design features such as offset piping connections, stepped doors or hatches, shadow shields, and labyrinths are incorporated in the shielding design, wherever applicable. Shielding for large diameter penetrations is provided by additional concrete or steel around a penetration. Shielding can also be provided by the addition of shield collars or leaded grout around pipes and penetrations.

- Access to potentially high radiation areas involves passage through shield doors or labyrinth walls. This prevents direct radiation streaming into adjacent areas. Labyrinth shielding is designed so that the exposure due to uncollided and scattered radiation is less than the maximum levels specified for the adjacent area.

  Current design requirements specify that routinely occupied areas have radiation levels less than 1,000 mrem/year [8]. It is expected that the facility will meet this requirement as it was designed to handle wastes up to 400,000 R/hour. These levels will be verified during initial operations

Within the RH TRU Waste Handling Area, RH TRU waste canisters are handled within shielded casks. The facility cask provides shielding while the RH TRU waste canisters are moved from the facility cask loading room to the disposal locations underground. Figure 4.2-16 shows the facility cask shielding.

The facility cask provides a cylindrical steel and lead shield enclosure around one RH TRU canister, and has shield valves at either end. The facility cask design includes sufficient shielding to reduce gamma radiation levels to less than 200 mrem/h (2 mSv/hr) at the surface of the cask from a RH canister with 7,000 rem/hr dose rate[19]. Design and operation of the facility cask will be reviewed should a significant RH TRU neutron contribution be identified which requires a design change of the road cask..

Within the Underground Disposal Areas, personnel exposures are maintained ALARA using a combination of component and equipment shielding and administrative controls. The facility cask construction provides shielding for operators and helps maintain doses ALARA during transport of the waste. When transferring a RH TRU canister from the facility cask to the disposal location in the underground salt, horizontal emplacement and retrieval equipment (HERE) shielding overlap with the facility cask to minimize radiation streaming paths.

A shielding plug will be inserted into the waste borehole to reduce radiation levels in occupied areas of the panel to maintain radiation exposures ALARA while additional waste handling operations are conducted. While the underground equipment help maintain doses ALARA, other activities will be included to maintain ALARA doses. These include using a remote operating console 20 ft (6.1 m) from the emplacement equipment and RCT coverage to determine low exposure rate areas for the operators during the transfer. Operator time in radiation fields will also be minimized based on surveys performed and directions provided by the RCTs when waste movement is not in progress.

7.1.3.1.3.4 Method of Shielding Analysis

The radiation source terms used for shielding design are based on a source term of 100 rem (1 Sv) per hour for the emplacement equipment [19,20] and 7000 rem (70 Sv) per hour for all other components and areas [21] in the RH process. The Transfer Cell and Hot Cell were designed for exposure rates up to 400,000 rem (4,000 Sv) per hour.[22]

Shielding analysis was performed by the Architect-Engineer for the WIPP Project by use of the QAD-P5A computer code and input parameters.[23,24] This code is a multi-group, multi-region point kernel, general purpose shielding code for estimating the effects of gamma rays originating in a volume distributed source. The point kernel method utilized by the code involves representing the source volume by a number of point sources, and computing the line of sight distance from each point source to the detector point. Using the distance the gamma ray travels through the shielding and the attenuating characteristics of the shielding materials, the geometric attenuation and material attenuation are determined. The point kernel representing the energy transferred by the uncollided photon flux along a line of sight path is combined with an appropriate buildup factor to account for the contribution from the scattered photons.

Gamma scattering calculations are used to estimate dose rates around labyrinth and shadow shielding. The G^3 computer code and input parameters are used for gamma scattering calculations.[25] The code calculates gamma scattering from a point source to a series of point detectors. The code evaluates the uncollided flux at specified scatter points, and multiplies it by the product of the differential cross section for scattering toward the detector point and the number of electrons in the elemental volume associated with the scatter point (the center of the elemental volume).

The ANISN computer code, with the Cask 40-group neutron/gamma cross section library, is used for neutron and secondary gamma calculations to confirm adequate shield thicknesses.[26,27] This code is a multi-group, multi-region, one dimensional, discrete ordinates transport code that solves the Boltzmann transport equation in slab, cylindrical, or spherical geometries for neutron and gamma radiation.

These computer codes are used to calculate dose rates for various shielding thicknesses. The radiation sources in the computer code are modeled as closely as possible to the actual geometries, dimensions, and physical conditions. The design objective of the shielding was to limit surface dose rates to less than 200 mrem (2 mSv) per hour with a RH canister of 1000 rem (10 Sv) per hour [28].

Shielding Integrity and Verification - The integrity of the shielding and its design features is ensured by the adherence to the requirements and recommended practices described in ANSI N101.6-1972,[29] with the following additional criteria:

- In addition to the applied loads requirements listed in Section 4.3.3 of ANSI N101.6-1972, [29] the concrete radiation shield structural analysis also considers steady-state and transient thermal loads.

- Detailed thermal stress analysis in the design of reinforcement for controlling thermal cracking (temperature reinforcement) in specific concrete radiation shields is included in determining variables used in equations for bending moment and tensile stress, as described in Section 6.4 of ANSI N101.6-1972.[29]

- Reinforcing steel or other means are provided for transferring shear and other forces through a construction joint, as described in Section 8.8.7 of ANSI N101.6-1972. [29]

Shielding surveys will be conducted around the outside of the shield walls during initial RH waste handling. The surveys will focus on potential streaming paths but general area surveys will also be conducted. Locations where general area radiation levels could cause individuals to exceed 5 mrem (.05 mSv) in any one hour or 100 mrem (1 mSv) in a year will be posted and barricaded and shielding corrections initiated, if necessary.

7.1.3.2 Radiological Practices

7.1.3.2.1 Radiation Safety Training

Radiation safety training is conducted at the WIPP facility to ensure that each worker understands: (1) the general and specific radiological aspects of their assignment, (2) their responsibility to their co-workers and the public for safe handling of radioactive materials, and (3) their responsibility for minimizing their own radiation exposure. The level of training for each employee is commensurate with the requirements of their job category.[11]

7.1.3.2.2 Radiological Control Procedures

The following procedures are established by policy to help ensure that radiation exposures to the general public, operating personnel, and the environment are within regulatory limits and ALARA.

Radiation and Contamination Surveys - Radiological Control Technicians (RCTs) perform routine radiation and contamination surveys of the facility and surveys of the waste packages upon receipt. In addition, RCTs will perform surveys on normally inaccessible areas when they are opened for maintenance and/or inspections. These areas include ventilation piping, drains, and overhead structural surfaces in the waste handling areas. Routine survey areas and frequencies are established in accordance with health physics procedures and manuals, and are based upon the probability of contamination and changes in radiation level, and upon personnel occupancy. These surveys consist of measurements for dose rate and contamination, as appropriate, for the specific area.

RCTs also provide job coverage surveys during the processing of RH shipping casks. These surveys include contamination surveys when new surfaces are exposed and exposure rate surveys when shielding is removed.

The records of the survey results are retained in a permanent file by the CH Rad Con section, and are reviewed shortly after survey performance, so that trends indicative of problem areas are identified as early as possible. Radiation and contamination surveys and associated records are described in Chapter 5 and Chapter 7 of the WIPP Radiation Safety Manual,[11] respectively.

Access Control - Access to radiological areas of the facility is controlled in accordance with 10 CFR 835[1] Only personnel who have successfully completed the requirements specified in the WIPP Radiation Safety Manual[11] will be allowed unescorted entry to the radiological areas of the site. All other personnel will require an escort. Personnel monitoring will be in accordance with WP 12-3, Dosimetry Program,[30] and the WIPP Radiation Safety Manual.[11]

The WIPP policy addressing visitors is described in Chapter 3 of the WIPP Radiation Safety Manual.[11]

Personnel entering a Controlled Area are required to obtain GERT prior to entering. Personnel performing radiological work in a radiological area are required to sign-in on a Radiological Work Permit (RWP), issued in accordance with Chapter 3 of the WIPP Radiation Safety Manual.[11]

The RWP specifies the controls necessary for the planned entry, and may require additional monitoring devices, protective clothing, respiratory equipment, etc. If a supplemental dosimeter is required, personnel must log in and out of the area to record the dosimeter readings. The necessity for these control items may be based exclusively on radiation level, a combination of surface contamination and radiation level, an area of airborne radioactivity, or the potential for occurrence of any of these conditions. When required, these additional control items will be prescribed, and personnel will be properly equipped prior to entering the work area.

Exposure control is accomplished by identifying areas containing sources of radiation and/or contamination, and controlling personnel access into these areas.

Access to high radiation areas is controlled in accordance with 10 CFR 835.502, High and Very High Radiation Areas,[12] unless exempted by DOE headquarters. All areas that have high radiation levels will have access controlled by approved means give in 10 CFR 835.

Radiological areas are designated and defined in 10 CFR 835[1] and the WIPP Radiation Safety Manual,[11] as follows:

- Radiological Area - Any area within a controlled area defined as a Radiation Area, High Radiation Area, Very High Radiation Area, Contamination Area, High Contamination Area, or Airborne Radiation Area.
- Controlled Area - Any area to which access is controlled in order to protect individuals from exposure to radiation and radioactive materials.
- Radiological Buffer Area (RBA) - An intermediate area established to prevent the spread of potential radioactive contamination. The area may surround Contamination Areas, High Contamination Areas, and Airborne Radioactivity Areas.
- Radioactive Material Area (RMA) - Any area within a controlled area, accessible to individuals, in which items or containers of radioactive material exist and the total activity of radioactive material exceeds the applicable values in Appendix E of 10 CFR 835.[1]
- Radiation Area - An area accessible to personnel in which the dose rate is greater than 0.005 rem (0.05 mSv) per hour, but less than or equal to 0.1 rem (1 mSv) per hour, at 11.8 in (30 cm) from the source, or from any surface that the radiation penetrates.
- High Radiation Area - An area, accessible to personnel, in which the dose rate is greater than 0.1 rem (1 mSv) per hour at 11.8 in (30 cm), but less than or equal to 500 rad (5 Gy) per hour, at 39.4 in (1 m) from the radiation source, or from any surface that the radiation penetrates.
- Very High Radiation Area - An area, accessible to personnel, in which the dose rate is greater than 500 rad (5 Gy) per hour at 39.4 in (1 m) from a radiation source or from any surface that the radiation penetrates.
- Contamination Area - Any area, accessible to individuals, where removable surface contamination levels exceed or are likely to exceed the removable surface contamination values specified in Appendix D of 10 CFR 835.[1]
- High Contamination Area - Any area, accessible to individuals, where removable surface contamination levels exceed or are likely to exceed 100 times the removable surface contamination values specified in Appendix D of 10 CFR 835.[1]
- Airborne Radioactivity Area - Any area, accessible to individuals, where: 1) The airborne radioactivity, above natural background, exceeds or is likely to exceed the Derived Air Concentration (DAC) values listed in Appendix A or Appendix C of 10 CFR 835,[1] or 2) An individual present in the area without respiratory protection could receive an intake exceeding 12 DAC-hours in a week

Personnel Monitoring Program - Personnel at the WIPP facility are monitored for both internal and external exposure as described in Section 7.1.3.2.6.

A routine external exposure monitoring program at the WIPP facility measures the radiation dose received by personnel. The external dose measurement program is described in Chapter 5 of the WIPP Radiation Safety Manual,[11] and WP 12-3, Dosimetry Program.[30]

Internal exposure measurement is described in Chapter 5 of the WIPP Radiation Safety Manual,[11] and the Dosimetry Program.[30] The WIPP program for internal exposure measurement may use the techniques of in-vitro bioassay examination (e.g., urinalysis, and/or fecal analysis) and in-vivo bioassay examination (whole-body counting and chest counting). Bioassay will be performed periodically for workers who handle radioactive materials as a normal function of their job. Internal dose assessment may be triggered by high airborne activity in work areas and/or unexpected contamination incidents.

Personnel dosimetry records are maintained by Dosimetry, which ensures that occupational exposure records are maintained in a readily retrievable data base, to permit ready accounting of employees' accumulated radiation exposure. Maintenance of personnel radiation exposure records is described in WP 12-3, Dosimetry Program Manual.[30]

Airborne Radioactivity Monitoring Program - The airborne radioactivity monitoring program complies with 10 CFR 835,[1] and verifies that the survey program described above is detecting contamination control problem areas, and those problem areas are corrected before loose surface contamination becomes airborne. The equipment used for air sampling and monitoring is described in Section 7.1.3.2.6. The airborne monitoring program is described in Chapter 5 of the WIPP Radiation Safety Manual.[11]

Respiratory Protection Program - A variety of types of respiratory protection equipment for non-routine operations such as maintenance, emergency use, and mine rescue are available at the WIPP facility.

Only respiratory protection equipment approved for use by the National Institute of Occupational Safety and Health (NIOSH) is used at the WIPP facility.

Workers who may be required to wear respiratory protection equipment must attend a training program on the equipment use during abnormal and emergency conditions. They are fitted for the devices they are required to wear, and are given a special medical examination to ensure that there is compatibility with wearing the devices.

The respiratory protection program meets the requirements of ANSI Z88.2-1992.[31] Respiratory protection is addressed in Chapter 5 of the WIPP Radiation Safety Manual,[11] and WP 12-IH.02, WIPP Industrial Hygiene Program.[32]

Radioactive Material Control - There are two facets to the control of radioactive material. The first is radioactive source control. Radioactive sources, Plutonium, Strontium/Yttrium, and Cesium are used to test, calibrate, and check the operation of radiation detection instrumentation. Radioactive sources are also brought on-site by external organizations for testing, radiography, and soil density operations. Use of sources on-site by external organizations is controlled in accordance with WP 12-HP3200, Radioactive Material Control[33]. The cognizant individual requesting the outside organization is responsible for informing the Radiological Control Manager of the plan. The Radiological Control Manager will ensure the external organization meets training and source documentation requirements and then will authorize bringing the source on site. The radioactive source control program ensures that proper control, including leak testing, inventory, transfer, and disposal of these sources are maintained at all times to prevent loss/theft, spread of contamination, and other abnormal occurrences involving radioactive sources.

The second facet of the radioactive material control program is the control of radioactive material produced from radiological work processes performed on-site. Any item used in a process that involves known or suspected presence of radioactive contamination or radioactive materials is surveyed prior to release from a radiological area. Items which could contain internal or masked (e.g., painted) contamination will be evaluated prior to release. If the survey indicates the presence of radioactive material on the item, then the item is either decontaminated or disposed of as site-derived waste, as directed by the CH RadCon Manager.

7.1.3.2.3 Radiological Control Facilities

Control Points - Personnel leaving Contamination, High Contamination, and Airborne Radioactivity Areas are also required to check out. Personnel leaving Contamination, High Contamination, and Airborne Radioactivity Areas are also required to perform a personnel survey prior to exit.

Personnel Access Control Points - As discussed in Section 7.1.3.2.2, access to the areas at the WIPP facility where radioactive materials are handled is controlled and limited to personnel who have successfully completed the requirements of Chapter 6 of the WIPP Radiation Safety Manual.[11]

Laboratory Facilities - Radiological analysis facilities are located in the Safety and Emergency Services Building, and the WHB. The counting equipment located in the laboratories is described in Section 7.1.3.2.6. A sample preparation facility, which is used to prepare samples for analysis, is also located near the Safety and Emergency Services Building. The sample preparation facility has appropriate equipment for radiochemical separation of radionuclides in the samples for counting.

Calibration Facilities - The dose rate instrument calibration facility is located near the Shielded Calibration Room of the Support Building. Contamination survey instruments are calibrated in the TRUPACT Maintenance Facility OHP office in the WHB. Calibration equipment is described in Section 7.1.3.2.6.

Equipment Decontamination Stations - Decontamination or overpacking of major equipment will be conducted as discussed in Section 4.3.1. Decontamination can be accomplished in place, according to established procedures.

Dosimetry Laboratory - The laboratory is located in the Safety and Emergency Services Building. The TLD equipment in the laboratory is described in Section 7.1.3.2.6. No radioactive materials, other than those used for calibration purposes, are permitted in the Dosimetry Laboratory.

Plant Clothing Facility - Plant clothing will be obtained from the clothing issue room in the Support Building. Plant clothing items, which are assumed or have been shown by survey to be contaminated, will be disposed of as site-generated waste.

7.1.3.2.4 Radiological Control Equipment

Various types of protective clothing and equipment are stocked at the WIPP facility to protect personnel from contamination. Protective clothing is provided for body, head, hand, and foot protection.

Contamination control equipment is used to prevent or limit the spread of radioactive contamination, and to assist in its removal. The equipment is stored and routinely inventoried in cabinets in or near areas where it is normally used.

7.1.3.2.5 Radiological Posting

When required, areas within the WIPP facility, including the underground disposal area, are posted in accordance with 10 CFR 835,[1] and the WIPP Radiation Safety Manual,[11] to specify the actual or potential radiological hazard. Posting provides necessary information and access control for minimizing personnel radiation exposures and the potential spread of contamination, as described in Section 7.1.3.2.2.

7.1.3.2.6 Radiation Protection Instrumentation

The instrumentation used by the health physics personnel can be divided into four categories:

- Fixed radiation counting instruments (laboratory type)
- Portable radiation/contamination survey instruments
- Airborne radioactivity sampling and monitoring instruments
- Personnel Monitoring Instruments

Instruments are repaired and calibrated by WIPP Maintenance personnel, RCTs, or off-site calibration facilities. In some cases, specialized instruments may be returned to the manufacturers for repair and calibration. If the instruments have been used in areas where they have the potential to be contaminated, they will be surveyed for radioactive contamination before any maintenance/calibration can start.

Fixed Radiation Counting Instruments - Fixed radioactivity counting instruments are located in the counting laboratories and at specific task monitoring stations. These monitoring locations include the RH Bay, Facility Cask Loading Room, and the Transfer Cell Service Room. These instruments are used to verify radiological conditions are within limits during job coverage and receipt surveys. The instruments selected possess the sensitivities required for monitoring airborne contamination and verifying that dose rates are below the WIPP WAC criteria.

These instruments are periodically calibrated using approved procedures and with standard sources, traceable to the National Institute of Standards and Technology (NIST). Instrument response and operation is verified each operating day to verify that the instrument background and calibration have not changed.

The instruments in the counting laboratories include gross radioactivity counters and spectrographic systems.

When required, samples are prepared for counting in the sample preparation facility. Sample preparation for counting may include evaporation, ashing, partitioning, chemical separation, or placing samples in containers that conform the sample to a defined geometry.

Portable Radiation Survey Instruments - The portable radiation detection instruments are used to perform radiation and contamination surveys in the field.

Portable dose rate instruments are normally calibrated in the calibration room using a shielded calibrator and/or other smaller NIST traceable sources and approved procedures. Portable contamination instruments are calibrated with NIST traceable sources and approved procedures. Prior to use, these instruments are checked for response with a check source containing a nominal amount of radioactivity. Those instruments that cannot be calibrated at the WIPP are sent to a calibration facility that has been approved by WIPP Quality Assurance.

Portable instruments include alpha contamination detectors, beta contamination detectors, gamma survey meters, and neutron survey meters.

Airborne (Area) Radiation Monitoring Instruments - Gamma area radiation monitoring (ARM) instruments are utilized to provide indication of RH waste radiation levels and to verify shielding is operating as expected. An ARM and a neutron spectrometer are located on the Cask Preparation Station work platform. The ARM provides a remote indication of dose rates where workers are unbolting the 10-160B cask lid in addition to the local dose rate surveys conducted by RCTs prior to the work starting. The neutron spectrometer is utilized to determine the appropriate correction factor for the dosimeters used by personnel working around the waste.

ARMs are also located in the Transfer Cell and Hot Cell to provide indication of the radiation levels of the waste being moved through the areas. An ARM is located in the Facility Cask Loading Room to verify that the shield collar properly engages on the facility cask as canisters are being pulled up from the Transfer Cell.

Personnel Monitoring Instruments and Service - The WIPP facility has a personnel dosimetry program that conforms to the requirements of 10 CFR 835.[1] The program is certified by the Department of Energy Laboratory Accreditation Program for Personnel Dosimetry (DOELAP), and is conducted in accordance with the WP 12-3,[30] WIPP Dosimetry Program.

Direct reading dosimeters are used when required by a RWP. These dosimeters are used to keep track of exposure in between TLD readouts. The TLD reading is the record of exposure. Personnel monitoring for external contamination is performed using the survey instruments previously discussed. Portal Monitors are placed at the WIPP site security gate to monitor personnel for radiation sources.

It is the intent of the radiological control program to qualify all employees who handle waste to perform contamination surveys on their clothing and body. In addition, when special operations are conducted, contamination surveys of personnel are performed by or under the direction of a qualified Radiological Control Technician. Bioassay programs will be administrated in accordance with WP 12-3, Dosimetry Program.[30]

A radiation monitoring system supplements the personnel and area radiation survey provisions of the plant radiological control program to ensure that radiation exposures are maintained ALARA. The radiation monitoring system includes continuous air monitors for radioactive particulate and fixed air samplers (FASs). The radiation monitoring alarms give visual and/or audible signals that annunciate locally, and, for select systems, in the Central Monitoring Room (CMR). These alarms require operator response and corrective actions. Most of the radiation monitoring system instruments are supplied with an Uninterruptible Power Supply (UPS) in the event of a power outage.

Calibration of Radiation Survey Instruments - All radiological instruments calibrations shall be traceable to NIST or the equivalent recognized standards and/or technologies. The portable dose rate instruments are calibrated with a shielded calibrator that minimizes radiation exposure to the calibration technician. Portable sources are used to calibrate fixed instruments such as the area radiation monitors and continuous air monitors. Sources are checked out and under the direct control of Radiological Control Technicians during the calibration activities in accordance with WP 12-HP3200, Radioactive Material Control[33]. Radiation survey instrument calibration records are maintained for the life of the facility.

Instruments receive periodic electronic calibration using NIST traceable, calibrated electronic sources.

Airborne Radioactivity Monitoring - Occupied radiological areas on the surface and underground are monitored, when deemed necessary by health physics practices. CAMs must be located in occupied areas where an individual is likely to receive 40 or more DAC-hours in a year as per 10 CFR 835.[1] CAMs utilized specifically in the RH process for monitoring occupied area are situated to monitor the Facility Cask Loading Room and the RH bay. CAMs are also utilized in the Hot Cell exhaust, CUR and adjacent to the cannister lift station in the Transfer Cell to provide indication of gross contamination as waste canisters/drums are moved.

The design features of the airborne monitoring equipment depend on their function. The monitors continually collect and measure airborne particulates by pulling air through a filter in proximity to an integral beta-gamma and/or alpha spectrometer. The airborne radioactivity monitor provides a local and, in some locations, a remote readout and alarm in the CMR. Meters, audible and visual alarms provide a clear and unambiguous indication of alarm conditions. As appropriate, each monitoring system is set to alarm within acceptable levels of the limits in 10 CFR 835.[1]

FASs, located near potential points of release, provide indication of releases at much lower levels than general area samples or CAMs. In the case of transuranic isotopes the local FAS may be the first indication of releases and can determine intakes at lower levels than routine bioassay sampling. Area sampling FASs, located adjacent to room exhausts, may provide an indication of activities that could be causing releases of airborne radioactivity before they are detected by job coverage air sampling.

FASs are installed to collect airborne particulates on a fixed filter medium. The fixed air sampler filters are removed and counted periodically to document average radioactive particulate concentrations.

In addition to the permanently installed equipment, portable CAMs and portable air samplers are provided. The portable air samplers and portable CAMs are similar to those described above. Portable samplers normally are used for sampling routine/non-routine operations, for emergency air sampling, or to temporarily replace inoperable equipment.

The CAMs are calibrated periodically and after repairs, using standards that are traceable to the NIST. The source and detector geometry during calibration are the same as the sample and detector geometry in actual use.

7.1.4 Dose Assessment for Normal Operations

7.1.4.1 On-site Dose Assessment

This section provides a summary of the dose assessments for the primary, occupationally exposed groups involved in waste handling operations at the WIPP facility. Waste containers accepted for disposal at the WIPP are expected to meet the 10 CFR 835[1] external contamination limits. Therefore, WIPP normal operations do not involve or entail any planned or expected releases of airborne radioactive materials. As such, the projected occupational worker dose from normal operations is a result of direct radiation from waste containers only, with no contribution from internal dose (CEDE) to airborne radiological materials.

Table 7.1-1 provides an estimate of personnel dose associated with the receipt, handling, and emplacement of a 72B waste canister. The estimate is based on a time-motion study conducted as part of the 1988 RH TRU Waste Pre-operational Checkout (DOE/WIPP-88-013)[34] modified to reflect current RH waste handling methodologies. The dose rates used with the time-motion study are based on source term evaluations[35] using a waste matrix and photon spectra based on the WIPP Baseline Inventory Report (BIR)[18]. The study concluded that a collective dose of 5 person-mrem would result from handling one average RH canister [36].

Table 7.1.2 provides an estimate of personnel dose associated with the receipt, handling, and emplacement of a RH waste canister in a 10-160B Shipping Cask. The estimate is based on a review and documentation of video tapes of processing a 10-160B shipping cask. The dose rates utilized with the time-motion study are based on source term evaluations using a waste matrix and photon spectra based on the WIPP BIR [18] and for waste expected from Argonne National Laboratory. The study concluded that a collective dose of 13.7 person-mrem would result from handling the waste contained in each 10-160B shipping cask.

Individual shipments may vary significantly from these estimated dose per shipment estimates but this value can be used for planning and dose estimates for work groups involved in RH waste processing.

7.1.4.2 Off-site Dose Assessment

As discussed in Section 7.1.4.1, waste containers accepted for disposal at the WIPP are expected to meet the 10 CFR 835[1] external contamination limits. Therefore, WIPP normal operations do not involve or entail any planned or expected releases of airborne radioactive materials. The WIPP is operated in compliance with the release standards of 40 CFR 191 Subpart A[4] and 40 CFR 61 Subpart H.[5] Once RH waste disposal operations begin, confirmatory measurements will be performed.

7.1.4.3 Effluent Sampling Systems/ Monitoring

The effluent sampling system consists of FASs for the confirmation of the presence or absence of airborne particulate radioactivity releases.

FASs are installed in the air stream of each release point to collect periodic confirmatory particulate samples from the total volume of air being discharged. The samplers consist of a sampling probe, a filter holder, and a vacuum supply. Sample location may have multiple filters to allow parallel sampling for outside agencies.

The analysis data from the FAS is used for quantifying total airborne particulate radioactivity discharged. This is done to demonstrate compliance with the mandated regulatory requirements contained in

40 CFR 191, Subpart A,[4] and 40 CFR 61, Subpart H.[5] These regulations place stringent requirements on the allowable annual dose equivalent to any member of the public. The sampling period and sample volume are maximized to provide a reasonable lower limit of detection.

7.1.4.4 Underground Monitoring Systems

The underground air monitoring system utilizes continuous air monitors (CAMs) to indicate airborne radioactivity levels in the air from the active waste disposal rooms. In case of increases in the airborne radioactivity, an alarm occurs and exhaust flow is shifted through HEPA filtration prior to release the environment.

The effluent monitoring systems are designed and environmentally qualified to withstand the effects of the Design Basis Earthquake, and are installed with backup power to allow monitoring in the event of a power failure.

References for Section 7.1

1. 10 CFR 835, Occupational Radiation Protection, January, 1993.

2. DOE-STD-1098-99, DOE Radiological Control Standard, July, 1999.

3. DOE-G-441.1-2, DOE Occupational ALARA Program Guide.

4. 40 CFR 191, Environmental Standards for the Management and Disposal of Spent Nuclear Fuel, High-Level and Transuranic Wastes, Subpart A, Environmental Standards for Management and Storage.

5. 40 CFR 61, Environmental Protection Agency Regulations on National Emission Standards for Hazardous Air Pollutants, Subpart H, National Emission Standard for Radionuclide Emissions from Department of Energy (DOE) Facilities.

6. DOE Order 5400.5, Radiation Protection of the Public and the Environment, June, 1990.

7. DOE Order 6430.1A, General Design Criteria Manual, December, 1983.

8. 10 CFR 835, Subpart K, Design and Control

9. DOE/WIPP-Draft 7-3123, Remote-Handled Waste Acceptance Criteria for the Waste Isolation Pilot Plant.

10. U.S. Department of Transportation, Title 49, Code of Federal Regulations.

11. WP 12-5, WIPP Radiation Safety Manual.

12. 10 CFR 835.502, High and Very High Radiation Areas

13. G-10 CFR 835/B2, Occupational ALARA Program, Implementation Guide for Use with 10 CFR 835, November 1994.

14. WP 12-2, WIPP ALARA Manual.

15. DOE O 420.1, Facility Safety, October 1995.

16. DOE O 430.1A, Life-Cycle Asset Management, August 1995.

17. WP 09-CN3007, Engineering and Design Document Preparation and Change Control

18. DOE/CAO 95-1121, U.S. Department of Energy Waste Isolation Pilot Plant Transuranic Waste Baseline Inventory Report (BIR), December 1995.

19. Bechtel Document D-41-F-20, Facility Cask Design Description, (WIPP Library microfiche).

20. WTSD-TME-041, Horizontal Emplacement and Retrieval Equipment Detailed Design Report, Westinghouse Electric Company, December 1984.

21. System Design Description WH00, WH03 RH Waste Handling Equipment

22. Bechtel Document D-76-K-02, Design Basis, Radiological Protection (General), (WIPP Library microfiche).

23. ORNL-4181, Modifications of the Point-Kernel Code QAD-P5A: Conversion to the IBM-360 Computer and Incorporation of Additional Geometry Routines, July 1968.

24. LA-3573, QAD: A Series of Point - Kernel General-Purpose Shielding Programs, April 1967.

25. LA-5176, G^3: A General Purpose Gamma-Ray Scattering Program, June 1973.

26. Union Carbide Corp., Report No. K-1693, A User's Manual for ANISN: A One Dimensional Discrete Ordinates Transport Code with Anisotropic Scattering, June 1973.

27. ORNL-RSIC-CLC23, Cask-40 Group Coupled Neutron and Gamma-Ray Cross Section Data, Revision D, March 12, 1974.

28. System Design Description WH00, Section 2.2.1

29. ANSI N101.6-1972, Concrete Radiation Shields.

30. WP 12-3, Dosimetry Program.

31. ANSI Z88.2-1992, American National Standard for Respiratory Protection.

32. WP 12-IH.02, WIPP Industrial Hygiene Program.

33. WP 12-HP3200, Radioactive Material Control

34. DOE/WIPP-88-013, 1988 RH TRU Waste Pre-operational Checkout

35. WIPP Radiological Control Position Paper 00-02 titled "Dose Rate Prediction Methodology for Remote Handled Transuranic Waste Workers at the Waste Isolation Pilot Plant"

36. WIPP Radiological Control Position Paper 00-03 entitled "Time-Motion-Dose Estimate Study for Remote Handled Waste Processing at WIPP", July 2000.

Table 7.1-1, Dose Estimates by Task and Worker Type for the 72B RH Waste Process

Task No.*	Activity	Waste Handlers (mrem)	Security (mrem)	RCTs (mrem)	Shaft Tenders (mrem)
1.0	Receive Truck	0.00	0.07	0.05	0.00
2.0	Transfer to Hold Area	0.02	0.00	0.28	0.00
4.0	Transfer to WHB	0.04	0.00	0.00	0.00
5.0	Offload Cask	1.25	0.00	0.48	0.00
6.0	Cask Preparation	2.63	0.00	0.29	0.00
10.0	Facility Cask Loading	0.00	0.00	0.00	0.00
11.0	Transfer Facility Cask to Conveyance	0.00	0.00	0.00	0.00
12.0	Transfer Facility Cask to Storage Area	0.07	0.00	0.00	0.00
14.0	Emplace Waste Canister	0.00	0.00	0.00	0.00
15.0	Emplace Shield Plug	0.01	0.00	0.00	0.00
Worker Type Totals		4.02	0.07	1.10	0.00
Total collective dose per RH Shipment = 5.2 person-millirem					

*Task numbers as identified in DOE/WIPP-88-013

Table 7.1-2, Dose Estimates by Task and Worker Type for the 10-160B RH Waste Process

Task No.*	Activity	Waste Handlers (mrem)	Security (mrem)	RCTs (mrem)	Shaft Tenders (mrem)
1.0	Receive Truck	0.00	0.03	0.03	0.00
2.0	Transfer to Hold Area	0.01	0.00	0.25	0.00
3.0	Transfer to WHB	0.00	0.00	0.00	0.00
4.0	Prepare Trailer and Cask	2.22	0.00	0.20	0.00
5.0	Offload Cask to transfer car	4.85	0.00	0.43	0.00
6.0	Cask transfer to CUR	5.13	0.00	0.00	0.00
7.0	Facility Cask Loading	0.06	0.00	0.03	0.00
8.0	Transfer facility cask to Conveyance	0.00	0.00	0.00	0.00
9.0	Transfer facility cask to Storage Area	0.07	0.00	0.00	0.00
10.0	Emplace Waste Canister	0.00	0.00	0.00	0.00
11.0	Emplace Shield Plug	0.06	0.00	0.00	0.00
Worker Type Totals		12.30	0.03	0.94	0.00
Number of facility cask transfers per 10-160B receipt = 3.3 Total dose per each RH Facility Canister Emplaced = 13.3 person-millirem					

7.2 Hazardous Material Protection

This section (1) provides an assessment of the potential for occupational and public exposure to non-radiological hazardous materials as a result of normal operations during the WIPP disposal phase, and (2) describes the WIPP programs in place for control of non-radiological hazards, and for protection of the worker and the public. An assessment of the potentials for non-radiological exposure as the result of abnormal operations and accidents is included in Chapter 5, Hazards and Accident Analysis.

Hazardous material protection is an integral part of the overall WIPP Industrial Safety program[1], as developed and implemented in WP 12-IH.02, WIPP Industrial Hygiene Program.[2] The organization responsible for implementation is the WIPP SH&S Industrial Safety and Hygiene (IS&H) section. Implementation of the defined program elements will ensure control of occupational health hazards originating from chemical, biological, and physical (excluding ionizing radiation) agents.

Requisition, procurement, use, handling, and storage of non-TRU waste hazardous materials are controlled by the WIPP Nonradioactive Hazardous Materials Environmental Compliance Manual,[3] and implementing procedures. Implementation of this program will ensure compliance with the Toxic Substances Control Act[4] (TSCA); the Superfund Amendments and Re-authorization Act[5] (SARA); the Occupational Safety and Health Act[6] (OSHA); the Comprehensive Environmental Response, Compensation, and Liability Act[7] (CERCLA), the Mine Safety and Health Act[8] (MSHA), and the U.S. Code of Federal Regulations (CFR).

7.2.1 Hazardous Material Sources

The primary occupational, non-radiological hazard to both the worker and the public during normal operations is from the airborne release of volatile organic compound (VOC) gases from TRU mixed waste containers during waste handling and emplacement operations. Lead and other heavy metals are present in TRU mixed waste, but pose hazards to workers and the public only under accident conditions, as discussed in Chapter 5. Exposure assessments for workers and the off-site public in the following sections are based on the releases of the average drum headspace VOC concentrations into the WHB and the Underground via diffusion through the containers and casks vent filters.

7.2.2 Hazardous Material Exposure Assessment for Normal Operations

The exposure assessments presented in this section are summarized from, or based on the environmental impacts analysis provided in the WIPP RCRA Permit Application.[9]

7.2.2.1 Off-site Exposure Assessment

The potential environmental and public impacts associated with the airborne release of VOCs during normal operations, summarized in this section, are assessed in detail in the WIPP RCRA Permit Application.[9] Based on the most recent headspace sampling of TRU mixed waste and toxicity data, nine VOCs were identified as the most prevalent and, of these, carbon tetrachloride, methylene chloride, and chloroform are considered potential carcinogens.

The average void volume was used to calculate the total grams of a VOC in the gas phase of each TRU mixed waste drum. The "void volume" or "headspace" is the total volume of a drum occupied by gases. The average void volume within a drum was calculated to be 5.2 cubic feet (147 liters, 6.56 moles at STP).

The compliance point relevant to air emissions for the RCRA Permit Application[9] for off-site exposure assessment is the WIPP site boundary. The RCRA Permit Application[9] assessment uses conservative assumptions, which tend to overestimate the consequences of releases. Table 7.2-1 lists the maximum public exposure concentration at the site boundary from VOC air emissions from both the Waste Handling Building (WHB) and the Underground, calculated assuming a 35-year operational and decommissioning/closure period. As shown in the table, the largest projected carcinogen health risk to a hypothetical member of the public residing at the WIPP Site boundary would be for carbon tetrachloride, at about 100 times below the public exposure health-based levels. The total risk from contributions from all nine emissions is considerably less than the acceptable risk level.

7.2.2.2 On-site Exposure Assessment

The potential occupational exposures associated with the airborne release of VOCs during normal operations, are also shown in Table 7.2-1. The highest occupational exposure concentrations from the WHB and Underground VOC air emissions are from methylene chloride, which are well below 29 CFR 1910.1000[10] (OSHA) 8-hour time weighted average (TWA) permissible exposure limits (PELs).

7.2.3 Industrial Hygiene Program

The WIPP Industrial Hygiene Program encompasses the comprehensive aspects of Industrial Hygiene defined by DOE Order 440.1,[11] excluding ionizing radiation, physical safety, fire prevention, medical examinations, and formal training, which are addressed by other programs.

The WIPP Industrial Hygiene Program acts to protect WIPP workers by anticipating, recognizing, evaluating, and controlling chemical, physical, biological, and ergonomic factors and/or stressors in the workplace. The PELs used in hazard evaluation and hazard communication shall not exceed those in the mandatory standards of DOE Order 5480.4,[12] Attachment 2.

7.2.3.1 ALARA Policy

The WIPP Industrial Hygiene Program seeks to ensure that employee exposures to hazardous materials are ALARA. The program uses the following controls to meet this goal:

- The use of approved and controlled procedures that provide administrative or engineering controls that minimize or eliminate exposure to hazardous materials
- Furnishing employees the necessary personal protective equipment
- Training employees to recognize potential hazards, take safety precautions, understand consequences of an accident, and know the actions to take in case of an accident
- Monitoring the work environment to obtain personnel and area exposure data
- Review and approval of all chemical use and storage at the WIPP
- Maintain Material Safety Data Sheets (MSDS)

7.2.3.2 Hazard Identification, Evaluation, and Elimination

WIPP (IS&H) identifies, defines, and evaluates controls in the occupational environment for those stresses which could be detrimental to employee health and safety. These stresses, whether chemical (e.g., liquid, particulate, vapor, or gas); physical (e.g., electromagnetic radiation, noise, vibration, extremes of temperature or pressure); biological (e.g., agents of infectious disease); or ergonomic (e.g., body position in relation to task) are recognized by familiarization with the work environment, review of first aid records, and hazard control.

IS&H uses methods available, either by laboratory analysis or instrument monitoring, to define environmental conditions of the workplace. The following activities are included, but not limited to: hearing conservation, dust sampling, characterization of mine gases, control of toxic fumes and vapors, sanitation inspections and potable water supply sampling, evaluating OSHA and MSHA compliance for on-site activities, review of proposed project facilities, and evaluation of other hazards by periodic monitoring of work areas. With respect to these activities, assurance of equipment calibration and maintenance and record keeping of inspections are maintained. These methods are outlined in WP 12-IS.01, Industrial Safety Program[1] and WP 12-IH.02, WIPP Industrial Hygiene Program.[2]

An on-site industrial hygiene laboratory calibrates and prepares sampling equipment for personnel exposure measurements, to analyze mine atmospheres, water potability, and chemical exposure hazards. Respirator fit testing and maintenance are also an industrial hygiene responsibility.

The WIPP Hazard Communication Program is discussed in detail in WP 12-IH.02, WIPP Industrial Hygiene Program.[2] The program includes material hazard training, MSDS management, inventory/listing of hazardous materials on-site, control of hazardous material purchase requisitions by IS&H prior to purchase, material container labeling requirements, on-the-job training requirements, and employee responsibility requirements concerning hazardous materials used in the work area.

The Industrial Hygiene Program is outlined in WP 12-IH.02, WIPP Industrial Hygiene Program.[2]

7.2.3.3 Chemical Management

Management of hazardous materials is implemented by guidance contained in WP 02-EC.04.[13] Guidelines are provided for procurement, receipt, distribution, tracking, storage, transportation, use, recycling, and disposal of hazardous materials.

Each WIPP employee receives as part of the General Employee Training (GET), hazard communication training and hazard recognition training. All employees who work with hazardous materials receive hazard communication training and RCRA training.

As an overview of site chemical usage purchase requisitions, MSDS, and Action Requests are reviewed. This minimizes use of hazardous materials by allowing for substitution of materials and maintains an ALARA approach to carcinogens and very toxic materials. During the review, availability of appropriate storage, personal protective equipment, and the need for personnel training are also evaluated.

Hazardous materials are logged into the warehouse upon arrival. IS&H receives copies of all MSDS for materials brought on the site whether by WTS or by subcontractors. Copies of MSDS are available to all employees during all shifts. Training on the OSHA Hazard Communication Standard is a requirement of all personnel who work with or enter areas where hazardous materials are used.

Periodic inspections of work and storage areas are performed to evaluate safe work conditions, proper storage, and effectiveness of engineering controls.

7.2.3.4 Air Monitoring

7.2.3.4.1 Non-radioactive Air Contaminants

WP 12-IH1828[14] implements the WIPP Air Quality Monitoring Program. To ensure compliance with American Conference of Governmental Industrial Hygienists (ACGIH) threshold limit values (TLV), administrative or engineering controls are determined and implemented whenever possible. When such conditions are not feasible to achieve full compliance, protective equipment and/or protective measures are used to keep employee exposures to air contaminants within prescribed limits. Any equipment and/or technical measures used must be approved by WIPP IS&H personnel.

When necessary, IS&H monitors or tests the air in areas where hazardous chemicals are stored, and in areas where workers may be exposed to concentrations of airborne fumes, mists, or vapors. All surveys are recorded; records contain the location, time, job description, or occurrences that may be associated with the contaminants and instruments used. All available inventories, reports and monitoring data are available to the Health Services personnel in order to assist the medical monitoring program.

In the WIPP Underground, airborne concentrations of mists, fumes, or vapors will be monitored and sampled as needed, or upon request, by suitable devices such as Draeger pumps or other portable grab sample monitors. If relevant air concentrations are found in excess of the TLVs, immediate corrective actions will be taken as determined by IS&H, and the air will be periodically tested until in compliance.

Air quality monitoring equipment is calibrated per manufacturers' recommendations, with an accurate record kept of pre-calibration conditions of the instrument. Functional tests are performed daily. Competency of individuals required to use air monitoring equipment is verified. Functional testing competency requires a formal training program.

7.2.3.4.2 Diesel Emissions

Vehicle emissions of Underground equipment are periodically monitored in accordance with WP 12-IH.02, Industrial Hygiene Program,[2] to assure the health and safety of personnel. Incomplete combustion of diesel fuels causes contaminants of carbon monoxide, carbon dioxide, and nitrogen dioxide. The air in the Underground is periodically monitored for these contaminants, to ensure compliance within TLV limits. Vehicles are checked for carbon monoxide and nitrogen dioxide emissions after preventive maintenance checks and during scheduled overview inspections.

7.2.3.5 Workplace Monitoring

IS&H surveys are a means of evaluating and maintaining a safe and healthful workplace. Examples of items surveyed are drinking water potability; local exhaust ventilation systems; and chemical, physical, and biological hazards. Sampling of the environment involves calibration of equipment, actual sampling, and recording the results in terms of the actual stress. Surveys are conducted in accordance with the WIPP Industrial Hygiene Program.[2]

7.2.3.6 Occupational Medical Program

The occupational medical site personnel, as defined in the Occupational Medical Program,[15] work in close cooperation and coordination with other departments to optimize the maintenance of a healthful work environment. Pre-employment, periodic, return to work, and termination health examinations are coordinated with the Human Resources Department. Diagnosis and treatment of occupational injuries and illnesses are coordinated with all departments where these incidents may occur. Health maintenance and preventive medical activities are coordinated with IS&H.

The program overview is performed by an occupational medical physician, who works part-time under contract to the WIPP facility. The physician is assisted by an on-site occupational health nurse and emergency service technicians (ESTs). The ESTs provide 24-hour emergency medical coverage on the site.

The occupational medical program is designed to accomplish the following:

- Ensure the health and safety of employees in their work environments, through the application of occupational health principles
- Determine the physical fitness of employees to perform job assignments without undue hazard to themselves, fellow employees, or the public at large
- Ensure the early detection and treatment of employee occupational illness, or injuries, by means of scheduled periodic health evaluations and a wellness awareness program

7.2.4 Environmental Monitoring

DOE Order 5400.1, General Environmental Protection Program[17], requires DOE facilities to conduct an environmental monitoring program to safeguard the safety of the public and the environment. WIPP environmental monitoring is performed in accordance with DOE/WIPP 99-2194, WIPP Environmental Monitoring Plan[16] which was written in accordance with the guidelines in DOE Order 5400.1[17]. Environmental monitoring was initiated in 1984 and will continue throughout the operational life of the facility. The data collected prior to receipt of CH TRU waste was used to establish the baseline measurements.

It is estimated that 98.9 percent of the total CH-TRU Curies is contributed by Pu-238, Pu-239, Pu-240, and Am-241, while 96.5 percent of RH TRU Curies is contributed by Co-60, Sr-90, Cs-137, Pu-239, Pu-240, and Am-241. There are a few other radionuclides associated with TRU wastes but are so low in quantities and contribute insignificantly to the total radioactivity and radiation doses that they are not measured. All samples obtained during environmental monitoring are analyzed for Pu-238, Pu-239+240, Am-241, U-234, U-235, U-238, K-40, Cs-137, Co-60, and Sr-90. These radionuclides are found in either the TRU waste or occur naturally in the environment. Radiological environmental sampling determined the amount and type of naturally occurring radioactivity in the WIPP area prior to operational status and provides a comparison between pre-operational and operational radiological observations to detect potential impacts. Environmental monitoring is conducted throughout the year and the analytical data is reported in the annual Site Environmental Report.[18]

7.2.4.1 Airborne Particulate

Airborne particulate samples are collected at seven different locations around WIPP site general area using low-volume continuous air samplers which collect samples on fiberglass filter paper at a rate of approximately 2.0 ft^3 (56 to 63 L) per minute air flow. The samples are collected at a height of 6.5 to 10 ft (1.95 to 3.05 m). Samples are collected weekly and composited quarterly. The quarterly samples are equivalent to approximately 7000 m^3 of air. The detection limits with alpha spectrometer for Pu-238, and Pu-239+240 and uranium are 5.9E-5 to 3.4E-5 pCi/m^3. The gamma emitters detection limit are in the range of 1.0E-3 to 1.2E-2 pCi/m^3. Suspect activity from any radiochemistry analysis is investigated by performing procedure WP 02-EM3004, Radiological Data Verification and Validation.[19]

7.2.4.2 Soil Samples

Annual soil samples are collected at the approximate locations of air particulate sampling. The soil samples are collected in three depth profiles: 0-0.8 in (0-2 cm),0.8-2.0 in (2-5 cm) and 2.0-4.0 in (5-10 cm). These depth profile measurements provide information to understand the vertical migration of radionuclides.

7.2.4.3 Groundwater

Biannual groundwater samples are collected from six brine water wells located around the WIPP site. These wells vary in depths ranging from 617 to 879 ft (188 to 268 m). One biannual groundwater sample is collected from a 225 ft (68.6 m) deep Class II shallow water well suitable for agricultural purposes. Additionally, measurements are taken at 70 well bores and are used to perform groundwater level surveillance of six water-bearing zones in the WIPP area. Groundwater surface elevations in the vicinity of WIPP may be influenced by site activities, such as pumping tests for site characterization, water quality sampling, or shaft sealing. Collection of groundwater quality data continues to assist the DOE in meeting performance assessment, regulatory compliance, and permitting requirements. The data also provides radiological and non-radiological water quality input to the WIPP Environmental Monitoring Program; a means to comply with future groundwater inventory and monitoring regulations; and input for making land-use decisions.

7.2.4.4 Surface Water

Surface water samples are collected annually from various locations in the WIPP vicinity. Because of the absence of surface waters near the WIPP facility, the water found in stock tanks, typically man-made catchment basins provided for livestock, provides the majority of the surface water samples. Other water samples are obtained from the upper Pecos River, Brantley lake, and Lake Carlsbad.

Retention basins and storm water diversion berms have been constructed to contain and control storm water discharges. At least one water sample from the retention basins is obtained and analyzed annually.

WIPP effluent water to the sewage lagoons (not storm water) is sampled and analyzed annually.

7.2.4.5 Sediments

The majority of annual sediment samples are collected at the same locations as surface water samples. Sediment samples are collected in water approximately 1.5 ft (0.5m) deep except for the upper Pecos River and Carlsbad locations. No sediment sample is collected at the sewage lagoons.

7.2.4.6 Biota Samples

Uptake of radionuclides by plants and animals is an important factor in estimating the intake of radionuclides in humans through ingestion. Annual vegetation samples are collected at the same locations that soil and air samples are taken. Fish samples are obtained from 3 different Pecos River locations. Cattle, deer, game birds, and rabbit samples are collected as available (i.e. road kill).

7.2.5 Volatile Organic Compound (VOC) Monitoring

The VOC monitoring activities have focused on the air pathway since 1991. The airborne emission of VOCs is the only credible release pathway from the WIPP facility during disposal operations, and the final closure design basis requires this pathway to be eliminated upon final closure.

The DOE has prepared a VOC monitoring plan which describes the aspects of a VOC monitoring strategy. The plan has been prepared so that the DOE can show that the assumptions and predictions used to demonstrate compliance to the environmental performance standards are valid.

A baseline VOC monitoring program was conducted at the WIPP facility and the results of the baseline program were used, in part, to define the confirmatory monitoring program for the disposal phase. VOC monitoring will be conducted throughout the disposal phase of operations to determine VOC concentrations attributed to open and closed panels. The Confirmatory VOC Monitoring Plan[20] describes a sampling and analysis program to confirm the theoretical calculations. The VOC monitoring program is capable of quantifying VOC concentrations in the ambient mine air at the WIPP and addresses the following elements:

1. Rationale for the design of the monitoring program, based on:

    - Possible pathways from WIPP during the active life of the facility
    - VOC sampling operations at WIPP
    - Optimum location of the ambient mine air monitoring stations to confirm theoretical calculations

2. Descriptions of the specific elements of the monitoring program including:

    - The type of monitoring conducted.
    - The location of the monitoring stations
    - The monitoring frequency
    - The specific hazardous constituents monitored
    - The implementation schedule for the monitoring program
    - The equipment used at the monitoring stations
    - The sampling and analytical techniques used
    - Data recording and reporting procedures

VOC Sampling in the Underground for target VOC compounds takes place at two locations designated as air monitoring stations VOC-A and VOC-B. VOC-B samples for VOCs in the upstream sources (inlet ventilation air to TRU waste disposal panels) and VOC-A samples the underground exhaust air which is the total of VOCs from upstream sources plus any VOC releases from emplaced TRU waste. Confirmatory VOC sampling began with initial TRU waste emplacement in Panel 1. Some sampling, however, was conducted prior to waste disposal to evaluate the monitoring system. For each quantified target VOC, the concentrations measured at Station VOC-B will be subtracted from the concentrations measured at Station VOC-A to assess the magnitude of VOC releases, if any, from the emplaced waste

Monitoring is performed using the concepts of pressurized sample collection in stainless steel canisters described in the US EPA Compendium Method TO-14A. The TO-14A sampling concept uses 6-liter passivated stainless-steel canisters to collect integrated air samples at each sample location. This conceptual method will be used as a reference for collecting the samples at WIPP.

The VOC monitoring program will be run under a Quality Assurance Project Plan[21] that has been prepared in accordance with the document entitled EPA Requirements for Quality Assurance Project Plans for Environmental Data Operations,[22] (EPA 1994). Quality Assurance criteria for the target analytes are presented in Attachment N, Table N-4, of the Hazardous Waste Facility Permit.[23] Definitions of the criteria are given in Attachment N, along with a discussion of other aspects of the Quality Assurance Program including sample handling, calibration, analytical procedures, data reduction, validation and reporting, performance and system audits, preventive maintenance, and corrective actions

References for Section 7.2

1. WP 12-IS.01, Industrial Safety Program.

2. WP 12-IH.02, WIPP Industrial Hygiene Program.

3. WP 02-5, WIPP Nonradioactive Hazardous Materials Environmental Compliance Manual.

4. 40 CFR 702-799, Toxic Substances Control Act.

5. 40 CFR 300-399, Superfund Amendments and Re-authorization Act.

6. 29 CFR 1900-1999, Occupational Safety and Health Act.

7. 40 CFR 300-372, Comprehensive Environmental Response, Compensation, and Liability Act.

8. 30 CFR, Sub-chapter N, Metal and Non-Metal Mine Safety and Health, 9th Edition, July 1997.

9. DOE/WIPP 91-005, Resource Conservation and Recovery Act Part B Permit Application, Rev. 6.

10. 29 CFR 1910.1000, Air Contaminants, July 1993.

11. DOE Order 440.1, Worker Protection Management for DOE Federal and Contractor Employees.

12. DOE Order 5480.4, Environmental Protection, Safety, and Health Protection Standards.

13. WP 02-EC.04, Hazardous Material Management Plan.

14. WP 12-IH1828, Air Quality Monitoring.

15. WP 15-HS.02, Occupational Health Manual.

16. DOE/WIPP 96-2194, WIPP Environmental Monitoring Plan, 1996.

17. DOE Order 5400.1, General Environmental Protection Program.

18. DOE/WIPP 99-2225, Waste Isolation Pilot Plant 1998 Site Environmental Report, October 1999

19. WP 02-EM3004, Radiological Data Verification and Validation

20. WP 12-VC.01, Confirmatory Volatile Organic Compound Monitoring Plan.

21. WP 12-VC.02, Quality Assurance Project Plan for Confirmatory Volatile Organic Compound Monitoring

22. EPA QA/R-5, EPA Requirements for Quality Assurance Project Plans for Environmental Data Operations, 1994.

23. Hazardous Waste Facility Permit No. NM4890139088-TSDF, issued by the New Mexico Environment Department October 27, 1999.

Table 7.2-1, Maximum Occupational and Public Exposure From Underground Waste VOC Emissions

Indicator Volatile Organic Compounds (ppmv)	Worker Receptor Concentration		OSHA 8 Hour TWA[b] (ppmv)	Estimated Risk for Carcinogens and Hazard Quotients for Non-Carcinogens for Public Exposure to Waste Emissions	Acceptable Level of Risk[f]
	Surface	Underground			
Carbon Tetrachloride	3.0E-04	1.2E-02	10	3E-08	1E-06
Chlorobenezene[a]	6.9E-04	2.9E-02	75	4E-06[e]	1
Chloroform	2.7E-04	1.0E-02	50[c]	2E-09	1E-06
1,1-Dichloroethylene	1.2E-03	4.7E-02	5[d]	2E-09	1E-05
1,2-Dichloroethane	3.8E-04	1.5E-01	50	8E-10	1E-06
Methylene Chloride	4.5E-03	1.6E-02	25	6E-10	1E-06
1,1,2,2-Tetrachloroethane	3.2E-04	1.3E-02	5	3E-09	1E-05
Toluene[a]	1.6E-03	6.7E-02	200	3E-07[e]	1
1,1,1-Trichloroethane	4.0E-03	1.6E-01	350	2E-08	1E-05

a. Non-Carcinogen (all others are class B2 or C carcinogens)
b. 8 hour time weighted averages (TWA) except for chloroform
c. Ceiling value limit not to be exceeded
d. 8 hour threshold limit value (TLV) - TWA from ACGIH
e. Non-Carcinogen hazard quotient
f. Acceptable level of risk for carcinogens is the probability of developing cancer, and for non-carcinogens is a hazard quotient less than or equal to 1

INSTITUTIONAL PROGRAMS
TABLE OF CONTENTS

SECTION	TITLE	PAGE NO.
8.1	Management, Organization, and Institutional Safety Provisions	8.1-1
8.1.1	Introduction	8.1-1
8.1.2	Requirements	8.1-1
8.1.3	Organizational Structure, Responsibilities, and Interfaces	8.1-1
8.1.3.1	Organizational Structure	8.1-2
8.1.3.2	Organizational Responsibilities	8.1-2
8.1.3.3	Staffing and Qualifications	8.1-3
8.1.4	Safety Management Policies and Programs	8.1-3
8.1.4.1	Safety Review and Performance Assessment	8.1-3
8.1.4.2	Configuration and Document Control	8.1-4
8.1.4.3	Occurrence Reporting	8.1-4
8.1.4.4	Safety Culture	8.1-5
8.1.4.5	Operational Systems Safety	8.1-5
	References for Section 8.1	8.1-7
8.2	Procedures and Training	8.2-1
8.2.1	Introduction	8.2-1
8.2.2	Requirements	8.2-1
8.2.3	Procedures Program	8.2-1
8.2.3.1	Development of Procedures	8.2-1
8.2.3.2	Maintenance of Procedures	8.2-2
8.2.4	Training Program	8.2-2
8.2.4.1	Development of Training	8.2-2
8.2.4.2	Maintenance of Training	8.2-3
8.2.4.3	Modification of Training Materials	8.2-3
	References for Section 8.2	8.2-4
8.3	Initial Testing, In Service Equipment Monitoring , and Maintenance	8.3-1
8.3.1	Introduction	8.3-1
8.3.2	Requirements	8.3-1
8.3.3	Initial Test Program	8.3-1
8.3.3.1	Start-up Testing & Preoperational Checkout	8.3-1
8.3.3.2	Start-up Testing Program Objective	8.3-1
8.3.3.3	Administrative Procedures for Conducting the Start-up Testing Program	8.3-1
8.3.3.4	Vendor Testing	8.3-1
8.3.3.5	Preoperational Checkout	8.3-2
8.3.4	In-Service Equipment Monitoring Program	8.3-2
8.3.4.1	Conduct of Operations	8.3-2
8.3.4.2	Resource Conservation and Recovery Act (RCRA)	8.3-3
8.3.5	Maintenance Program	8.3-3
8.3.5.1	Waste Handling Building	8.3-4
8.3.5.2	Shafts	8.3-4
8.3.5.3	Subsurface Areas	8.3-4
8.3.5.4	Air Filtering Equipment	8.3-4

INSTITUTIONAL PROGRAMS
TABLE OF CONTENTS

SECTION	TITLE	PAGE NO.
	8.3.5.5 Equipment Decontamination Provisions	8.3-5
	8.3.5.6 Other Surface Structures	8.3-5
	References for Section 8.3	8.3-6
8.4	Operational Safety	8.4-1
	8.4.1 Introduction	8.4-1
	8.4.2 Requirements	8.4-1
	8.4.3 Conduct of Operations	8.4-1
	8.4.3.1 Controlled Access Area Activities	8.4-1
	8.4.3.2 Communications within the Facility	8.4-1
	8.4.3.3 Control of On-Shift Training	8.4-2
	8.4.3.4 Control of Equipment and System Status	8.4-2
	8.4.3.5 Lockouts and Tagouts	8.4-2
	8.4.3.6 Independent Verification	8.4-2
	8.4.3.7 Log Keeping	8.4-3
	8.4.3.8 Operations Turnover	8.4-3
	8.4.3.9 Operational Occurrences	8.4-3
	8.4.4 Fire Protection	8.4-3
	8.4.4.1 Fire Hazards	8.4-3
	8.4.4.2 Fire Protection Program and Organization	8.4-4
	8.4.4.3 Combustible Loading Control	8.4-4
	8.4.4.4 Fire Fighting Capabilities	8.4-4
	8.4.4.5 Fire Fighting Readiness Assurance	8.4-5
	References for 8.4	8.4-6
8.5	Emergency Preparedness Program	8.5-1
	8.5.1 Introduction	8.5-1
	8.5.2 Requirements	8.5-1
	8.5.3 Scope of Emergency Preparedness	8.5-1
	8.5.4 Emergency Preparedness Planning	8.5-2
	8.5.4.1 Emergency Response Organization	8.5-2
	8.5.4.2 Assessment Actions	8.5-2
	8.5.4.3 Notification	8.5-2
	8.5.4.4 Emergency Facilities and Equipment	8.5-3
	8.5.4.5 Memorandums of Understanding and/or Agreements	8.5-3
	8.5.4.6 Training and Exercises	8.5-4
	8.5.4.7 Reentry and Recovery	8.5-4
	References for Section 8.5	8.5-5
8.6	Security	8.6-1
	8.6.1 Introduction	8.6-1
	8.6.2 Security Procedures and Equipment	8.6-1
	8.6.3 24-Hour Surveillance Systems	8.6-1
	8.6.4 Barrier and Means to Control Entry	8.6-1
	8.6.4.1 Barrier	8.6-1
	8.6.4.2 Means to Control Entry	8.6-2

INSTITUTIONAL PROGRAMS
TABLE OF CONTENTS

SECTION **TITLE** **PAGE NO.**

8.6.4.3 Warning Signs 8.6-2

INSTITUTIONAL PROGRAMS
TABLE OF CONTENTS

FIGURE **TITLE** **PAGE NO.**

Figure 8.1-1, WIPP Facility Operations Responsibility 8.1-8

INSTITUTIONAL PROGRAMS
TABLE OF CONTENTS

TABLE **TITLE** **PAGE NO.**

Table 8.3-1, WIPP Preoperational Checkout Program 8.3-7

This page intentionally left blank

INSTITUTIONAL PROGRAMS

This chapter discusses additional institutional programs at WIPP which fulfill the objectives of 10 CFR 830.204, Documented Safety Analysis.[1] A description of the requirements and their implementation is provided for the following programs:

- Management, Organization, and Institutional Safety
- Procedures and Training
- Initial Testing, In-Service Equipment Monitoring, and Maintenance
- Operational Safety
- Emergency Preparedness Program

8.1 Management, Organization, and Institutional Safety Provisions

8.1.1 Introduction

The WIPP facility is managed by Washington Energy and Environment division (WEE), Washington TRU Solutions LLC (WTS). WEE includes other government facilities operated by Washington and WTS draws on these resources as a result of this arrangement.

8.1.2 Requirements

The requirements and guidelines for developing the WTS Management, Organization, and Institutional Safety program are provided in DOE Order 4700.1, Project Management Systems[2] and DOE/WIPP 103,[3] DOE Management Directives for the WIPP.

8.1.3 Organizational Structure, Responsibilities, and Interfaces

Westinghouse and WTS has managed and operated the WIPP facility for the DOE since October 1985. WTS, as the present Management and Operating Contractor (MOC), provides the management staff, sets the safety culture, issues policies, and implements programs.

Several committees have been formed to integrate information regarding environment, safety, health, and radiation protection activities at the WIPP. These committees facilitate the sharing of solutions to common problems and issues.

Additionally, WTS has access to expertise in several disciplines including waste management, risk assessment, safety analysis, environmental services, technical and analytical services, regulatory compliance, transportation, legal, quality assurance (QA), and others, as required.

The Washington Group reviews WEE facility operations, which include the WIPP, to evaluate compliance with applicable policies, plans, procedures, laws and regulations. WTS policy is to conduct all operations so that the health and safety of the employees, the public, and the environment remain protected. This commitment extends to all levels of management, and is reflected in the goals and objectives established for operating facilities.

The corporation has no specific authority regarding the engineering and design, construction, QA, testing, operation, and other activities beyond those carried out by the WTS, as specified in the contract with the DOE. Corporate resources are available and will be committed, as needed, to ensure that WTS activities are conducted safely, correctly, and efficiently. Corporate management plays a vital role in providing appropriate direction for WTS activities by selecting the WTS President and General Manager (GM).

8.1.3.1 Organizational Structure

Responsibility for operating the WIPP facility has been assigned to the MOC organization. Figure 8.1-1 shows the chain of command by which the Assistant Secretary for Environmental Restoration and Waste Management exercises responsibility for the operational safety of the WIPP.

While responsible for all aspects of the WIPP facility, DOE has contracted these scopes of work to various organizations. The MOC is responsible for managing the current and future construction contracts, and to operate the WIPP facility, including all day-to-day operations.

The WTS GM is responsible for the design, operation, maintenance, and modification of the WIPP facility, including the health and safety of employees, and the protection of the environment. The WTS GM has issued policies exercising this responsibility to manage these activities directly, or by delegation of authority. Management functions are performed according to management policies and requirements defined in the operating contract.

8.1.3.2 Organizational Responsibilities

The WTS GM has delegated specific responsibilities to managers for the following WIPP functions:

1. Radiation safety, industrial safety, environmental protection, and regulatory compliance;

2. Operation, control, and maintenance of all surface structures, including the Waste Handling Building and associated equipment; handling and storing radioactive waste on site; transporting hazardous material off-site; transporting salt aboveground; monitoring and operating site utilities including HVAC, power distribution, water and sewer; operating the Central Monitoring System; underground operations including mining, transporting salt underground, hoisting, operating key facility experimental programs; and equipment maintenance;

3. Design of equipment, systems, and facilities for special operations; review of designs proposed by other major Project Participants; design of new or necessary facilities; resolution of technical and operational problems; and maintenance of design configuration;

4. Identification, development and definition of applicable requirements; assistance to management in interpreting and implementing QA program elements; provide performance-based and improvement-oriented independent assessment activities specific to quality improvement; review Federal Registers; review DOE Orders; perform field audits; evaluate audits of other departments; and, act as the Defense Nuclear Facilities Safety Board (DNFSB) point of contact;

5. Planning and scheduling; integration of technical programs, program development and program reporting, strategic planning and long term budget development; programmatic performance; recommend work-scope priorities; and, conduct contingency analyses;

6. Financial resources, accounting, computer services, material and property control, document and procedure review, and procurement services;

7. Coordination of all personnel-related functions supporting facility operations, planning and implementing the general employee technical training programs, and certifying/qualifying the operating staff;

8. Public information programs, governmental affairs, technical outreach and communications; public displays, handouts and brochures, interaction with the electronic and print media, visitor's program at the WIPP, Speaker's Bureau activities, identification and resolution of issues between the WIPP Project and outside institutions, maintain contacts with individual representatives from outside institutions, public relations efforts, and the States and Tribal Education Program (STEP), which is aimed at preparing emergency response personnel bordering the WIPP transportation routes.

8.1.3.3 Staffing and Qualifications

The WTS GM has a Bachelors or advanced degree in engineering or business, or equivalent, and at least 15 years of diverse nuclear plant operations experience, including at least 5 years of department level management or equivalent experience.

8.1.4 Safety Management Policies and Programs

The WIPP objective is to **DO WORK SAFELY**. As stated in MP 1.28,[4] Integrated Safety Management, the WIPP will systematically integrate safety into management and work practices at all levels of the organization so that the mission is accomplished while protecting the workers, the public, and the environment.

8.1.4.1 Safety Review and Performance Assessment

Facility safety elements are reviewed annually. The WIPP MOC ensures that applicable environment, safety, and health requirements are met according to 10 CFR 830.204, Documented Safety Analysis.[1] The review focuses on the functional areas within the safety program including: industrial safety, fire protection, and hazardous material elements.

WTS procedure WP02-AR3001, Unreviewed Safety Questions Determination,[7] implements the requirements of 10 CFR 830.203, Unreviewed Safety Question Process.[8] The procedure includes the screening criteria to determine if a proposed activity requires further evaluation and exemptions for activities that require no screening; the safety evaluation criteria for detailed evaluation of proposed activities and potential issues, identification of the training and appointment requirements for screeners, evaluators, and independent reviewers; documentation requirements and forms; and, identification of the authorization basis documents. Proposed engineering changes, operating procedures and certain controlled document changes, as well as discovered issues are screened and/or evaluated by qualified personnel. A limited number of personnel are trained and designated by department managers to perform the safety evaluations; all independent reviewers are designated by the manager of ES&H. Positive USQ determinations identified by safety evaluators and independent reviews are reviewed by the Nuclear Review Board (NRB) who are also trained safety evaluators.

8.1.4.2 Configuration and Document Control

The WIPP facility was designed and constructed to DOE Order 6430.1,[9] General Design Criteria for Department of Energy Facilities, draft, dated June 10, 1981, and codes and standards applicable at the time of construction. Facility modifications since that time have been designed according to the revision of DOE Order 6430 and codes and standards applicable at the time of modification. All future modifications shall be designed according to DOE Orders O 420.1, Facility Safety [10], dated October 1995 and O 430.1A, Life-Cycle Asset Management, [11] dated August 1995, (as applicable at the time) and all applicable codes and standards as described by SDDs. WP 09, Engineering Conduct of Operations,[12] implements configuration management requirements through the WIPP 09 series Engineering procedures.

WIPP Technical Procedures and Emergency and Alarm Response Procedures are written using guidance provided in WP 15-PS.2, Technical Procedure Writer's Guide.[5] WP 15-PS.2 references the basic steps for procedure writing found in DOE-STD-1029-92, DOE Writer's Guide for Technical Procedures.[6] Modifications to operating procedures resulting from an ECO are controlled and implemented through procedure WP 15-PS3002, WTS Controlled Document Processing.[13] WP 15-PS3002 also provides the process for review, approval, and cancellation of WTS documents controlled by Document Services.

Temporary or permanent changes proposed to the facility are measured against criteria specified in Unreviewed Safety Question Determination, WP 02-AR3001.[7] USQs are reviewed against the SAR and Technical Safety Requirements (TSR). A safety evaluation documents any change, as mandated by 10 CFR 830.203.[8]

8.1.4.3 Occurrence Reporting

The Occurrence Reporting Process at the WIPP is directed by DOE Order 232.1A, Occurrence Reporting and Processing of Operations Information.[14] The WTS occurrence reporting implementing procedure is WP 12-ES3918, Reporting Occurrences In Accordance With DOE Order 232.1A.[15] This occurrence reporting procedure provides for reporting events to the Facility Manager (FM) or his designee for categorization.

Examples of events that should be reported include, but are not limited to the following: events that could endanger or adversely affect personnel safety or operations, or are contrary to DOE requirements. In addition, the procedure requires the event to be investigated to determine the direct cause, root cause and contributing causes, and to develop corrective actions to prevent recurrence.

The WIPP Lessons Learned Program was established as required by DOE Order 5480.19, Conduct of Operations Requirements for DOE Facilities,[16] and is implemented by WTS Management Charter MC 9.20, Lessons Learned Working Group.[17] Management Charter MC 9.20 empowers the Lessons Learned Working Group to administer the Lessons Learned Program, which was implemented to ensure a continuing improvement in plant safety and reliability. Lessons Learned bulletins are developed from information obtained from DOE Safety Notices, Nuclear Regulatory Commission Bulletins, external occurrence reports, internal occurrence reports, internal investigative reports, and other pertinent industry documents. Lessons Learned bulletins are distributed to the WIPP managers for inclusion into their required reading, as applicable.

8.1.4.4 Safety Culture

A safe working environment is the priority at the WIPP. Individuals responsible for performing work are continually evaluating the safety of themselves, the environment, and the facility. This philosophy is directed from the top down within the organization.

The Management approach to Occupational Health and Safety at the WIPP emphasizes the integration of safety into all aspects of the facility mission. WIPP management has communicated its expectations of site personnel and subcontractors regarding safety through policies, procedures, programs, and recognition as discussed in the WIPP Voluntary Protection Program Application, 1994.[18] Senior management infuses the principles of safety to mid-management, mid-management to line management, and this continues until every employee incorporates safety principles into their job.

Top management is "visibly" involved in safety and health programs by establishing goals, approving management policies, providing accountability mechanisms, implementing site tracking systems, participating in employee communications, reviewing injury/illness trends, reviewing Industrial Safety and Hygiene (IS&H) summaries, and providing resources to perform jobs safely. Management support is evidenced by the WIPP Voluntary Protection Program Application, 1994,[18] and application for re-certification in 1999.

The DOE Voluntary Protection Program (VPP) Star Status recognition was awarded to the WIPP because of their comprehensive health and safety program. The VPP program encourages recognition of successful leading- industry injury and illness prevention programs that result in reducing workplace hazards. The WIPP safety program elements including training, employee involvement, management commitment, and hazard prevention and controls were reviewed during the VPP application process. The WIPP Safety program annual reevaluation maintains the appropriate focus on safety to retain VPP Star status.

8.1.4.5 Operational Systems Safety

This aspect of Operational Systems Safety deals with operational controls whose purpose is to detect and control hazards in operational activities. The program is carried out through independent safety review, inspection, and analysis by the Environment, Safety, and Health organization. Specific features of Operational Systems Safety include:

- Design review - Formal, documented design reviews of facilities and equipment are attended by IS&H, as required, in addition to construction packages review, and design specifications. Comments generated are formally resolved, with sign off/concurrence required in the final issued package.

- Procedures review - Operations and maintenance procedures are formally reviewed, and approved, by IS&H personnel, as required, to ensure that hazards inherent in the work are properly controlled. In the process, proper personal protective equipment and other precautions are reviewed.

- Operational readiness analysis - As part of the formal startup process for new facilities and components, IS&H participates in formal readiness analysis, to ensure that safety concerns involving personnel, equipment, and procedures are resolved before operations begin.

- Procurement and subcontract reviews - IS&H reviews of purchase orders, as required, are performed to ensure that purchases of hazardous/toxic substances are known to IS&H, and to ensure that no prohibited materials are purchased. These reviews also ensure that any necessary use precautions are issued to the user when the materials are brought on the site. Subcontract reviews are performed to ensure that DOE and other safety regulations are specified as contract requirements.

- Inspections - Actual compliance with safety requirements is periodically evaluated through scheduled and unannounced inspections, appraisals, and walkthroughs of the workplace by IS&H personnel.

- Fitness-for-Duty - This policy is applicable to all WTS personnel, and is relative to the ability of any employee to perform his/her job in a safe and healthful manner. The Fitness-for-Duty Program includes the identification and disposition of substance or alcohol use or abuse problems, and physical or psychological impairment problems of any kind.[19]

References for Section 8.1

1. 10 CFR 830.204, Documented Safety Analysis.

2. DOE Order 4700.1, Project Management Systems, March 6, 1987 (For reference only, superceded by DOE O 430.1A).

3. DOE/WIPP 103, DOE Management Directives for WIPP.

4. MP 1.28, Integrated Safety Management Policy.

5. WP 15-PS.2, Technical Procedure Writer's Guide.

6. DOE-STD-1029-92, DOE Writer's Guide for Technical Procedures

7. WP 02-AR3001, Unreviewed Safety Questions Determination

8. 10 CFR 830.203, Unreviewed Safety Question Process.

9. DOE Order 6430.1, General Design Criteria Manual for DOE Facilities (draft), June 10, 1981 (For reference only, superceded by DOE O 420.1 and DOE O 430.1A).

10. DOE Order O 420.1, Facility Safety.

11. DOE Order O 430.1A, Life-Cycle Asset Management.

12. WP 09, Engineering Conduct of Operations.

13. WP 15-PS3002, WTS Controlled Document Processing.

14. DOE Order 232.1A, Occurrence Reporting and Processing of Operations Information, August 1997.

15. WP 12-ES3918 , Reporting Occurrences in Accordance with DOE Order 232.1A.

16. DOE Order 5480.19, Conduct of Operations Requirements for DOE Facilities.

17. WTS Management Charter MC 9.20, Lessons Learned Working Group.

18. Westinghouse Electric Corporation, Waste Isolation Division Voluntary Protection Program Application, 1994.

19. WTS Managers Reference Guide Section 007

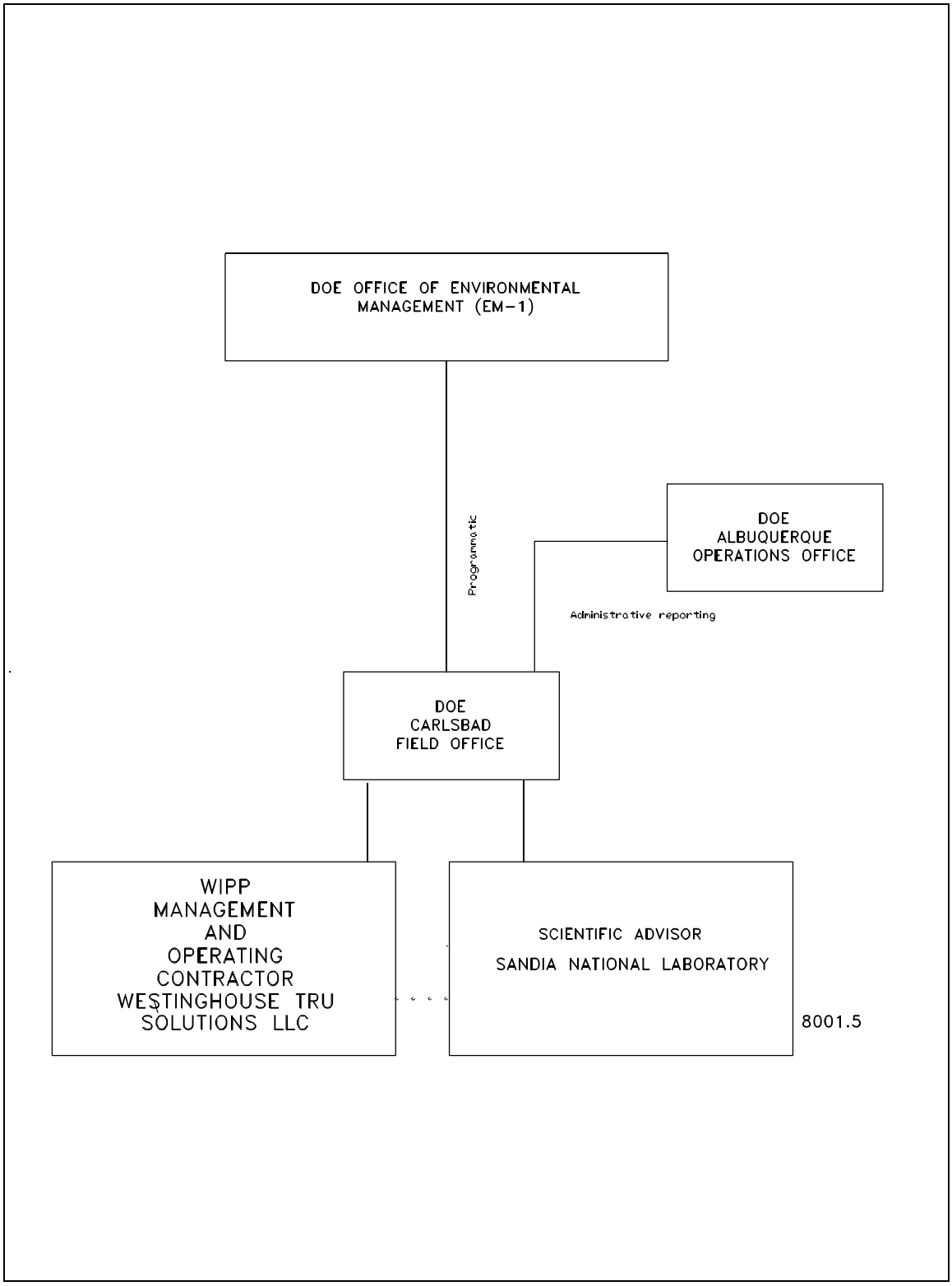

Figure 8.1-1, WIPP Facility Operations Responsibility

8.2 Procedures and Training

8.2.1 Introduction

The WIPP training program is organized and managed to facilitate planning, directing, evaluating, and controlling a systematic training process that fulfills job-related needs and regulatory requirements. The MOC is responsible for establishing and administering the overall training program for WIPP personnel. Operations procedures are provided to ensure the facility is operated within its safety basis.

8.2.2 Requirements

Minimum requirements for the selection, qualification, and training of personnel at the WIPP are specified in DOE Order 5480.20A, Personnel Selection, Qualification, and Training Requirements for DOE Nuclear Facilities.[1] The minimum requirements for procedures are specified in DOE Order 5480.19, Conduct of Operations Requirements for DOE Facilities.[2]

8.2.3 Procedures Program

Formal written operating procedures are prepared for all developments and modifications that would affect the safety and/or the design purpose of the facility as defined in the PSAR. Procedures govern configuration control of the facility and those systems designated defense-in-depth in Chapter 5. In addition, maintenance and calibration procedures are used to insure compliance with the safety basis of the site, as defined in this PSAR. Work on defense-in-depth structures, systems, and components (SSCs) is controlled procedurally.

Procedures are established to ensure the satisfactory preparation and thorough review of the operating procedures and any modifications to the procedures that may be necessary.

A master file of operating procedures is kept current, and controlled copies are available. The QA requirements for procedures are discussed in Chapter 9.

8.2.3.1 Development of Procedures

Procedure selection or need is required when a defined task or activity is to be performed, which meets one of the following criteria: (1) accomplishes work or activities defined in the WP-13-1, WTS Quality Assurance Program Description (QAPD),[3] or creates quality records, (2) provides specific direction for the operating equipment and/or systems included in the configuration management process, (3) provides specific direction for physical activities that require repeatability and documented results, as described in WP 15-PS.2.[4] The cognizant organization manager assigns a technically competent person, as defined in the WTS QAPD,[3] to develop the technical content of the document. Additionally, the cognizant organization manager determines which organizations will review the procedure, verifying its technical content and requirements, and the validation process, to determine if the procedure can be performed as written. An Unreviewed Safety Question (USQ) screening is performed by a qualified individual per WP 02-AR3001, Unreviewed Safety Questions Determination.[5]

Revisions to procedures are processed according to WP 15-PS3002, WTS Controlled Document Processing.[6] According to WP 15-PS3002, a proposed revision is prepared and processed by the cognizant organization. A review of the changes by all affected groups is the minimum requirement for revisions. Processing through USQ screening is required for all but minor changes.

Following successful completion of the technical review and validation process, the document package is sent to the Document Review Committee for final review, then the procedure is approved for use by a cognizant organization manager.

8.2.3.2 Maintenance of Procedures

Procedures undergo a periodic review during which a technically competent person must review the procedure for any new or existing requirements, cancellations, deletions, or additions. The change process allows for procedure changes that require immediate correction. Changes to the procedures mandate a technical review that must be signed off by the cognizant organization manager and a technically competent person before issuance as an approved change.

8.2.4 Training Program

The training program for employees, visitors, and subcontractors at the WIPP facility is a formally organized and continuing program. Training programs address the training of WIPP personnel and any site subcontractors in job-related training subjects spanning all levels of the organization, from fundamental technical skills and speciality training, to supervisory and management skills training. A formal Training Program for the WIPP facility operation staff and technical support personnel has been established. Training program policies and procedures define job function, responsibility, authority, and accountability of WTS personnel involved in managing, implementing, and conducting training.

The primary objective of the WIPP facility training program is to prepare personnel to operate the WIPP in a safe and environmentally sound manner. To achieve this objective, the training program provides all employees with training relevant to their positions. Full-time employees at the WIPP, regardless of employer, and including those not directly involved in waste handling activities, receive an introduction to the Resource Conservation and Recovery Act (RCRA) and emergency preparedness within 30 days of employment as part of the General Employee Training (GET). In this way, everyone at the WIPP is given a basic understanding of regulatory requirements and emergency procedures. Employees in hazardous or mixed waste management positions receive additional classroom and on-the-job training designed specifically to teach them how to perform their duties safely, and to ensure the facility's compliance with the regulations. Hazardous/mixed waste management personnel receive the required training before being allowed to work unsupervised.

8.2.4.1 Development of Training

The training program is organized and managed to facilitate planning, directing, evaluating, and controlling a systematic training process that fulfills job-related needs and considers regulatory requirements. Implementation of training at the WIPP is a shared effort between the functional groups and the training section. WIPP training and qualification programs are included in the following areas:

- Operations (Facility Operations, Waste Operations, Underground Operations)
- Maintenance Operations
- Environmental and Radiological Control
- Industrial Safety and Hygiene
- Engineering
- Quality Assurance
- Technical Training

Training to support qualification programs is based on a systematic approach to training (SAT). A graded approach has been used to align the training program to the needs of the WIPP site. The WIPP application of the SAT methodology is described in detail in the WIPP Training Program, WP 14-TR.01.[7] A product of this process is a training program designed to meet the skill and knowledge needs for the evaluated task or job. Through this process, the final program elements will be defined, including training frequency. Each training program is carefully developed and periodically re-evaluated to ensure relevance to the course objectives, compliance with the regulations, and support of the goal of safe and environmentally sound operations at the WIPP. This process is useful because it compels managers and training staff to look critically at each position, and to determine the necessary training program for each employee to fully develop their necessary expertise. If regulatory guidelines require, or task performance should dictate continuing or recurrent training, it is established at this point.

The Technical Training Section is responsible for administering training programs, for complying with training standards affecting both regular and contract personnel, and for maintaining current and accurate records reflecting the training of each employee. Records activities follow an approved "Records Inventory and Disposition Schedule," reviewed and updated at least annually, to comply with federal codes, policies, or directives concerning training records administration.

8.2.4.2 Maintenance of Training

Training programs are periodically reviewed, focusing on changes in job scope, task, performance, procedure, and regulation. Training programs are approved and authorized by appropriate line management and WIPP Training management before being implemented or revised.

Because changes are anticipated, to maintain qualifications, a qualified employee will re-qualify on applicable qualification cards every two years in order to maintain their qualification. Employees re-qualify only on infrequent or abnormal tasks. This re-qualification focuses on continuing training in tasks that are critical to safety, or are difficult, or infrequently performed. This commitment to refresher training ensures a proficient and safe workforce.

8.2.4.3 Modification of Training Materials

When it is decided that existing programs require revision, a formal process is implemented to ensure program quality is maintained and enhanced.

Using the combined efforts of WIPP training and cognizant personnel, programs are revised and updated. These updates may be due to changes in task performance, modifications to equipment or noted human factors deficiencies. At the completion of program modification, cognizant line management and WIPP training must approve any revision before implementation. The amount and type of training required in the permits will be maintained, and additional training is at the discretion of the WIPP.

References for Section 8.2

1. DOE Order 5480.20A, Personnel Selection, Qualification, Training Requirements for DOE Nuclear Facilities.

2. DOE Order 5480.19, Conduct Of Operations Requirements For DOE Facilities.

3. WP 13.1, WTS Quality Assurance Program Description.

4. WP 15-PS.2, Technical Procedure Writer's Guide

5. WP 02-AR3001, Unreviewed Safety Questions Determination.

6. WP 15-PS3002, WTS Controlled Document Processing.

7. WP 14-TR.01, WIPP Training Program.

8.3 Initial Testing, In Service Equipment Monitoring , and Maintenance

8.3.1 Introduction

The MOC is responsible for testing and maintaining the equipment and systems at the WIPP.

8.3.2 Requirements

The plans and provisions for initial testing and in-service monitoring, are provided in DOE-STD-3009, Preparation Guide for U.S. Department of Energy Nonreactor Nuclear Facility Safety Analysis Reports [1]. The requirements for maintaining DOE property is provided in DOE Order 433.1, Maintenance Management Program for DOE Nuclear Facilities.[2]

8.3.3 Initial Test Program

8.3.3.1 Start-up Testing & Preoperational Checkout

Equipment and systems important for continued and safe operation of the WIPP facility shall undergo start-up testing before operation. A post modification retest, a type of start-up test, is performed after changes are made to equipment or systems. The start-up testing shall verify established design criteria, prove functional requirements, and safe operation. The WIPP Start-Up Test Program, WP 09-SU.01, [3] includes a program covering initiating, executing, revising, and canceling start-up test and retest procedures; start-up documents/records control; and qualification requirements for start-up testing personnel.

8.3.3.2 Start-up Testing Program Objective

The WIPP start-up/acceptance/post-modification test program objective is to establish administrative controls to verify and document that SSCs required for safe operation of the WIPP facility meet established design criteria and functional requirements of approved test procedures. A start-up test may be a formal start-up test, an acceptance test, or a post-modification retest.

8.3.3.3 Administrative Procedures for Conducting the Start-up Testing Program

Administrative procedures are established to ensure that the test procedures, before their execution, are prepared, reviewed and approved by qualified personnel. Testing shall be performed by certified individuals, and test results shall be documented and evaluated for adequacy using start-up program procedures. Test procedure changes are controlled and evaluated to ensure that changes do not adversely impact the intent of the test. Plant modifications shall be tested in the same manner as the original design. Implementation of such modifications/changes, including retesting, shall be accomplished by the latest approved applicable project and start-up program procedures.

8.3.3.4 Vendor Testing

Some equipment or system tests may be conducted at the vendor’s facility according to contractual specifications. However, it is recognized that often equipment and systems can only be adequately tested after they are installed and integrated with other systems at the WIPP facility. Equipment and systems that fail vendor tests are rejected until repairs, adjustments, or modifications are completed, and failed equipment or systems are retested. Nonconformances may be authorized after evaluation by responsible engineering and management personnel.

8.3.3.5 Preoperational Checkout

Beyond vendor and start-up testing, preoperational waste handling demonstration checkouts shall be conducted using simulated waste. Simulated waste handling operations shall be performed in sequence, from receipt through final emplacement. The checkouts listed in Table 8.3-1 shall be done according to the latest approved operating procedures and preoperational checkout demonstration procedures. Preoperational checkout objectives include:

- Demonstrating that WIPP personnel can safely handle RH TRU waste packages, including unloading an internally contaminated 72 B or 10-160B cask.
- Demonstrating the satisfactory operation of WIPP waste handling equipment
- Demonstrating that the WIPP operating procedures are comprehensive, and sufficiently detailed to perform normal waste handling operations, and to recover from off-normal occurrences encountered during waste handling operations
- Establishing the aggregate time estimate for WIPP waste handling operations
- Providing the basis for estimating the dose to be received by WIPP waste handling personnel

8.3.4 In-Service Equipment Monitoring Program

8.3.4.1 Conduct of Operations

After systems have completed the start-up processes, they are available for day-to-day operations. It is important to ensure that systems remain within their nominal performance parameters. If systems fail to operate, repairs are implemented, and operability is re-established.

The Operations Department Conduct of Operations requires that functional testing be done before equipment or systems are considered capable of performing their design function. The requirement for a Conduct of Operations program is documented in Section 5, Administrative Controls, of the TSRs in Attachment 1.

Responsibility for ongoing evaluation falls with many organizations depending on the nature of the evaluation. For example, some equipment is subjected to periodic operability checks to ensure that operating parameters are within the range allowed for reliable operations. Examples are environmental continuous air samplers (covered by WP 02-EM1012, Airborne Particulate Sampling [5]) and systems important to safe operation covered by the TSRs in Attachment 1. The following ensure that waste handling equipment is operating, and operated in a safe manner according to design prior to and during waste handling activities:

- A centralized checklist, maintained by Operations, will be completed prior to entering the Waste Handling Mode to meet the requirements of TSR Section 1.2.
- Periodic oversight of the preoperational checks of waste handling equipment and facility activities are conducted by WIPP management.
- The WIPP Operations Department conducts internal assessments of procedural compliance.

- Through normal conduct of operations, operators continuously review procedures for accuracy and improvement as procedures are being used. If an error or improvement is identified, WIPP management is informed to evaluate and take action to change or revise the procedure. This process ensures the effectiveness of procedures, and the safety of personnel and equipment at all times.

Other systems require periodic preventive maintenance. This is performed according to procedure WP 10-WC3011, Maintenance Process.[6]

Analytical and measurement equipment are entered into a calibration recall system to ensure timely calibration and recalibration of this equipment.

8.3.4.2 Resource Conservation and Recovery Act (RCRA)

Equipment instrumental in preventing, detecting, or responding to environmental or human health hazards, such as monitoring equipment, safety and emergency equipment, security devices, and operating or structural equipment are inspected. The WIPP facility maintains a series of written procedures that include detailed inspection steps and checklists. Table D-1 and D-2 of the Hazardous Waste Facility Permit [7] list the items or systems requiring inspection. This permit when modified to allow the disposal of RH TRU waste, will include inspections for RH handling and emplacement equipment.

The operational procedures assign responsibility for conducting the inspection, the frequency of each inspection, the types of problems to be watched for, what to do if items fail inspection, directions on record keeping, and inspector signature, date, and time. Inspections include identifying malfunctions, or deteriorating equipment and structures. Inspection results and data, including deficiencies, discrepancies, and corrective actions taken are recorded.

The frequency of inspections is based on the rate of possible deterioration of the equipment and the probability of an environmental or human health incident if the deterioration or malfunction, or any operator error, goes undetected between inspections.

8.3.5 Maintenance Program

Under normal operations, equipment requiring regular maintenance is expected to remain free of hazardous materials. However, it is assumed that any equipment in waste handling areas may become contaminated. Equipment decontamination provisions include smooth surfaces, minimizing void spaces, and designing for easy removal. Floors, walls, ceilings, and structural steel surfaces in the waste handling areas have special protective coatings to simplify decontamination. Where decontamination is impractical, space is provided for installing temporary shielding, or the equipment may be removed for repair or disposal.

The WIPP is fully committed to achieving compliance with the requirements of DOE Order 433.1,[2] Contractor Requirements Documents, for essential equipment. WP 10-2, Maintenance Operations Instruction Manual;[8] WP 10-WC3011, Maintenance Process;[6] and WP 10-WC.02, Predictive Maintenance Program [9] implement DOE Order 433.1. All maintenance procedures will be reviewed every two years (biennially). The maintenance program set forth under DOE Order 433.1,[2] has been established, developed, and implemented at the WIPP Site.

The MOC is responsible for operating the WIPP facility, including the responsibility for maintenance. The organization, responsibilities, work scope, management and control, and interfaces are prescribed in the maintenance administrative procedures.

8.3.5.1 Waste Handling Building

The Waste Handling Building (WHB) has certain provisions incorporated above those which are required for routine maintenance activities.

Equipment in the RH TRU waste handling areas is designed for contact maintenance.

The Waste Shaft hoist area includes sufficient space for maintenance. An overhead handling system is included for the hoist equipment, and means are provided for transferring the hoist equipment to the ground level for maintenance or disposal.

8.3.5.2 Shafts

The mine shafts are designed for periodic inspection and maintenance. The top of the Waste Shaft cage, the Air Intake Shaft (AIS) cage, and the Salt Handling (SH) skip/cage are designed to be used as inspection platforms, with associated overhead protection bonnets installed during inspections of those shafts. Inspections in the Exhaust Shaft are conducted with remote controlled TV cameras, since there is no hoist installed in this shaft.

8.3.5.3 Subsurface Areas

Maintenance and repairs are conducted in the underground for excavating equipment, and waste handling and emplacement equipment. Waste disposal equipment that requires maintenance is surveyed and decontaminated, if required, before being taken to subsurface maintenance facilities.

In the event that the facility cask malfunctions during emplacement or retrieval operations, local maintenance equipment can be set up with local shielding, as required. Manual overrides are provided on the waste handling equipment to allow for canister transfer operations to be completed, or recovery of the canister to a safely shielded condition, if the equipment malfunctions. Normal waste handling equipment maintenance is performed underground at the disposal horizon.

Manufacturers' recommended maintenance procedures are expected to be adequate for the underground mechanical equipment. As in any type of operation, however, regular and periodic inspections are required of all equipment and structures.

To minimize any maintenance excavation or re-excavation, all openings are initially designed large enough to allow for creep.

8.3.5.4 Air Filtering Equipment

The filter systems are periodically inspected, and filters are changed when the pressure drop across them reaches a predetermined level. If leaks are found, repairs are implemented, and the system is retested. High Efficiency Particulate Air (HEPA) filter testing will be conducted in accordance with ANSI N510.[4]

HEPA filters, associated with the underground ventilation system, are located in the Exhaust Filter Building (EFB) in large filter housings. To prevent contamination from spreading, the used HEPA filters are removed and bagged within the housing for disposal. Access to the filter chamber room, where the housings are located, is through an air lock that provides a boundary to prevent the spread of contamination. Positive airflow into the filter chamber room is maintained during the filter change-out activity.

For the WHB HEPA filters and other smaller filter systems, personnel replacing filters use approved

procedures and safety requirements. However, they do not enter the filter housings. Contaminated filters are bagged before they are removed to prevent contamination from spreading during filter change-out. Filter housing maintenance, except for cleaning, is unnecessary.

8.3.5.5 Equipment Decontamination Provisions

Contaminated items are bagged and are then disposed of as radioactive wastes, or decontaminated in a designated area. Decontamination of waste transporters can be accommodated in the RH TRU unloading area.

The general decontamination philosophy for the WIPP is to minimize the amounts of waste generated due to decontamination operations.

8.3.5.6 Other Surface Structures

Surface structures other than the WHB and the EFB are associated with either direct support activities (switch yards, substation, sewage treatment, backup power, shaft headframe, and hoist houses), or indirect support activities (Warehouse Building). These facilities contain systems that require routine maintenance according to common industrial practice and manufacturers' recommendations. No special or unusual maintenance features are incorporated in the design of these facilities.

References for Section 8.3

1. DOE-STD-3009.94, Preparation Guide for U.S. Department of Energy Nonreactor Nuclear Facility Safety Analysis Reports.

2. DOE Order 433.1, Maintenance Management Program for DOE Nuclear Facilities.

3. WP 09-SU.01, WIPP Start-Up Test Program.

4. ANSI N510, American National Standards Institute, Standard for Testing of Nuclear Air Cleaning Systems.

5. WP 02-EM1012, Airborne Particulate Sampling.

6. WP 10-WC3011, Maintenance Process.

7. Hazardous Waste Facility Permit No. NM4890139088-TSDF, issued by the New Mexico Environment Department, October 27, 1999.

8. WP 10-2, Maintenance Operations Instruction Manual.

9. WP 10-WC.02, Predictive Maintenance Program.

Table 8.3-1, WIPP Preoperational Checkout Program

Test Title	Plant Condition	Test Objectives
RH TRU Waste Handling System	Before receiving RH TRU Waste	Verify all systems associated with the RH TRU waste disposal function as described in Section 4.3.2.

This page intentionally left blank

8.4 Operational Safety

8.4.1 Introduction

The MOC ensures that all operations are conducted according to DOE Order 5480.19, Conduct of Operations Requirements for DOE Facilities.[1] The PSAR considers the term "operations" as reflecting those daily activities, resources, management, and communication required to support the WIPP in meeting goals and objectives for the intended facility purpose.

Operation of the facility will be according to approved operating procedures, TSRs, and good operating practices. Supervisors are responsible for reporting to the Facility Shift Manager (FSM) any conditions that may affect the operation or operability of the facility. Supervisors must obtain approval for the operation and/or maintenance of the plant equipment and system through the Plan-of-the-Day (POD).

Pre-job briefings will be conducted regularly by supervisors before the evolution for new or complex activities, to ensure that they are completed safely, correctly, and efficiently.

8.4.2 Requirements

The MOC's Conduct of Operations is directed by DOE Order 5480.19,[1] and is implemented by WP 04-CO, Conduct of Operations.[2]

8.4.3 Conduct of Operations

8.4.3.1 Controlled Access Area Activities

Entry to controlled access areas will be limited to persons who need to be in the area on required business. This access will be granted by the control area operator. Additionally, Facility Operations management and designated Operations Assistance Team (OAT) personnel are granted unrestricted access to the Central Monitoring Room (CMR).

Only persons specifically authorized by administrative procedures may operate controlled area equipment.

8.4.3.2 Communications within the Facility

Timely communication within the facility is enabled by the: public address (PA) system which includes the Site Notification System, radios, beepers, mine pagers and phones, and touch-tone telephones. When making site-wide announcements, the Central Monitoring Room Operator (CMRO) will use the PA system (including the Site Notification System [SNS]), and the mine phone.

Personnel notification is accomplished by flashing lights, vibrating personnel pagers, or by persons dedicated to notifying personnel working in areas where the PA system cannot be heard. Emergency communication PA systems will be periodically tested to ensure functionality.

8.4.3.3 Control of On-Shift Training

On-Shift training will be conducted by Level 1 Instructors. A qualified subject matter expert (SME) or On-the Job Training Evaluator (OJTE) will observe trainee performance skills to ensure that no adverse actions occur. Procedure steps, cautions, and notes must be discussed with the instructor before operating any equipment until the student has demonstrated proficiency in performing a skill. Trainees will continue being monitored until demonstrating the proper proficiency.

Training procedures provide documentation guidance for operator qualification and certification programs. Qualification cards will be signed by the SME, documenting that the trainee has successfully and adequately demonstrated proficiency of that skill.

8.4.3.4 Control of Equipment and System Status

The FSM is responsible for maintaining proper configuration, and authorizing changes of general surface and underground equipment, and defense-in-depth equipment and systems. The respective manager or supervisor is responsible for maintaining proper configuration for other activities including: hoisting equipment, waste handling equipment, and systems.

Equipment and systems will be checked for proper operation before being placed into service or before being returned to service after maintenance. Checklists will be used to ensure that equipment is controlled, checked, and monitored.

A system is in place to monitor the status of on-site alarms. Procedures initiating appropriate action are in place to monitor equipment parameters for abnormal conditions that could be masked by deficient alarms.

Programs are in place to ensure that operating personnel receive and use the latest revisions or changes to engineering drawings and/or specifications.

8.4.3.5 Lockouts and Tagouts

WP 12-IS.01, Industrial Safety Program,[3] and procedure WP 04-AD3011, Equipment Tagout/Lockout[4] sets forth the policy requiring each employee to properly implement the requirements of DOE Order 5480.19,[1] Chapter IX, to protect personnel, DOE property and plant systems, and prior to entry into a high energy system. This procedure provides for placing, removing, and auditing operations tags and locks for configuration control, and in addition, provides for caution tags. When conducting maintenance activities, equipment tagout/lockout uses WP 10-AD3005, Control and Use of Maintenance Locks,[5] which complies with DOE Order 5480.19[1] and 29 CFR 1910.147.[6]

8.4.3.6 Independent Verification

Independent verification is performed on defense-in-depth Structures, Systems, and Components (SSCs) when circumstances warrant.

Individuals performing independent verification will be instructed and trained in the appropriate techniques for verifying the correct position of facility components, and will perform the necessary checks in accordance with documented procedures and guidelines.

8.4.3.7 Log Keeping

Logbooks will be kept at all key shift positions, as determined by the importance of the sequential information related to shift events, and the importance of the shift position regarding establishing or maintaining regulatory or DOE requirements.

As a minimum, a logbook will be maintained by the FSM or the CMRO. Information will be recorded accurately and efficiently, following guidance in WP 04-CO, Conduct of Operations,[2] and WP 04-AD3008, Shift Operating Logs.[7]

8.4.3.8 Operations Turnover

The Operations Turnover process, as defined in WP 04-CO, Conduct of Operations,[2] ensures that during the supervisory turnover process, any conditions related to abnormal lineups, status of major components, surveillance planned or in progress, or evolutions planned or in progress are reported to the oncoming supervisor.

Oncoming personnel and supervisors will conduct a comprehensive review of appropriate written and visual information, as described in WP 04-CO, Conduct of Operations,[2] before responsibility for the shift position is transferred. The off-going supervisor will explain all items noted, at a time when facility conditions are stable to the oncoming personnel.

8.4.3.9 Operational Occurrences

WP 12-ES3918, Reporting Occurrences in Accordance with DOE Order 232.1A,[8] establishes a system for reporting events to the Facility Manager (FM)/Facility Manager Designee (FMD) for categorization of Off-Normal and Unusual occurrences. Operational Emergencies are categorized per WP 12-ER3904,[9] Categorization and Classification of Operational Emergencies, which refers to WP 12-ES3918[8] for the less severe events. Events reported to the FM/FMD are categorized within two hours of discovery per the criteria listed in Attachment 1 of WP 12-ES3918.[8] Events are categorized as off-normal, unusual, or emergency occurrences based upon the severity of the incident. All occurrences are investigated and documented per the requirements of WP 15-MD3102, Event Investigation [10] and WP 13-QA3016, Root Cause Analysis,[11] to determine the root cause, direct cause, and contributing cause. In addition, corrective actions are developed, scheduled, and lessons learned identified. A Notification Report shall be prepared by the FM/FMD, and uploaded into the Occurrence Reporting Processing System (ORPS) database.

8.4.4 Fire Protection

The fire protection program at the WIPP facility ensures the safety of plant personnel, the reliability and continuity of plant operations, and the minimization of property loss. These objectives are met by incorporating automatic fire suppression systems, using fire resistant materials in facility construction, providing fire barriers and fire doors in areas susceptible to fires, and enclosing vertical openings in buildings, thereby preventing the spread of fires.

8.4.4.1 Fire Hazards

The fire hazards at the WIPP due to electrical equipment failure, spontaneous ignition, highly flammable materials, maintenance activities, fuel storage, and office materials are considered to be normal industrial type fires, and could occur in any site area.

8.4.4.2 Fire Protection Program and Organization

Responsibility for the fire protection program is assigned to the General Manager (GM), while administration, formulation, and implementation of the program is assigned to the Manager of Environment, Safety and Health, (ES&H).

8.4.4.3 Combustible Loading Control

The objectives for fire protection at the WIPP facility are to ensure the safety of plant personnel, the reliability and continuity of plant operations, and to minimize property loss. To meet these objectives, the WIPP facility design incorporates the following features:

- With the exceptions of some temporary and other noncritical structures (such as the off-site air monitoring system), all buildings and their support structures are protected by fixed, automatic fire suppression systems designed to the specific, individual hazards of each area. Each building is evaluated annually to determine the fire risk associated with the occupancy.

- Noncombustible construction, fireproof masonry construction, and fire resistant materials are used whenever possible.

- Areas susceptible to fire are separated by fire walls and fire doors, to contain and isolate hazardous materials or operations. Fire separations are installed where required because of different occupancies, per the Uniform Building Code (UBC).

- All vertical openings in buildings are protected by enclosing stairways, elevators, pipeways, electrical penetrations, etc., to prevent fire from spreading to upper floors.

- The exhaust ventilation systems, which remove hot fire gases, toxic contaminants, and explosive gases and smoke, are designed with a high fire integrity.

- The components of the electric service and distribution systems are listed by Underwriters' Laboratory, or approved by Factory Mutual Engineering Corporation. These systems are installed to minimize possible ignition of flammable material and maximize safety.

As part of the improved risk fire protection program, certain passive and active design features including area separation, noncombustible construction, fixed fire suppression systems (water and dry chemical), and manual fire suppression capabilities are used.

To ensure reliability of the active fire protection systems, inspection, testing, and maintenance programs are provided. There are also administrative controls for the fire system impairments, hot work and internal audits of the inspection, testing and maintenance, and other program elements essential to the maintenance of an improved risk fire protection program, as required by DOE orders.

8.4.4.4 Fire Fighting Capabilities

Facilities, equipment, and trained personnel are available to provide the following emergency services for the WIPP facility:

- Fire fighting
- Emergency medical response
- Industrial rescue

- Mine rescue
- Hazardous material response and control

Fire fighting capability includes a fully-equipped pumper engine, associated firefighting equipment, and trained fire fighters. Firefighting activities are led by an Emergency Services Technician (EST) on duty 24 hours a day. Backup fire fighting personnel are provided using cross-trained personnel.

The ESTs are state-licensed emergency medical technicians, and provide 24-hour emergency medical response capability at the WIPP facility. During the day shift, a full-time registered nurse is on site. A fully-equipped first-aid room, ambulance, underground ambulance, and rescue vehicle are available to provide basic life support activities.

The ESTs also provide industrial rescue for vehicle accidents, confined space extrication, and other industrial incidents. The technicians provide rope rescue through the use of state-of-the-art hydraulic and manual equipment.

Mine rescue services are provided using two trained mine rescue teams at the WIPP facility. These teams are fully trained in the use of mine rescue procedures and techniques, as well as the use of self-contained breathing apparatus and firefighting equipment. A mine rescue station has been developed and equipped with MSHA-approved, properly maintained, self-contained breathing apparatuses, mine rescue supplies, and required spare parts.

The WIPP facility utilizes numerous materials that meet the NFPA, EPA, or DOT classifications as a hazardous material. The emergency preparedness staff has the equipment and trained personnel necessary to respond to, and control spills and leaks of these materials, and, in some cases, clean up the spills for the protection of life, health, property, and the environment.

An Emergency Management Program has been prepared for the WIPP facility. The WIPP Emergency Management Program[12] provides an organized plan of action for dealing with identified credible emergencies at the WIPP. The plan identifies lines of authority, the responsibilities of emergency response personnel and organizations, and the WIPP manpower and equipment resources available to cope with emergencies.

8.4.4.5 Fire Fighting Readiness Assurance

Exercises and drills are used to demonstrate the effectiveness of the established Emergency Management Program. Evaluations of these exercises ensure an effective and efficient program is in place and it is truly capable of mitigating the credible emergency scenarios. Exercises and drills are conducted on a regularly scheduled basis for all WIPP facility response personnel and equipment. WIPP facility Emergency Management promotes involvement in emergency response activities outside the scope of the WIPP facility. In an effort to maintain a high level of skill level, interest and motivation among response personnel, various response teams participate in local, regional, and national competitions.

The safety program is objectively evaluated by trend analysis, and by determining current status of training, inspections, sampling, monitoring, drills and exercises, and accident frequency. In addition, assessments of the safety program include those conducted by the DOE-CBFO.

References for 8.4

1. DOE Order 5480.19, Conduct of Operations Requirements for DOE Facilities.
2. WP 04-CO, Conduct of Operations.
3. WP 12-IS.01, Industrial Safety Program.
4. WP 04-AD3011, Equipment Tagout/Lockout.
5. WP 10-AD3005, Control and Use of Maintenance Locks.
6. 29 CFR 1910.147, The Control of Hazardous Energy (Lockout/Tagout).
7. WP 04-AD3008, Shift Operating Logs.
8. WP 12-ES3918, Reporting Occurrences in Accordance with DOE Order 232.1A.
9. WP 12-ER3904, Categorization and Classification of Operational Emergencies.
10. WP 15-MD3102, Event Investigation.
11. WP 13-QA3016, Root Cause Analysis.
12. WP 12-9, WIPP Emergency Management Program.

8.5 Emergency Preparedness Program

8.5.1 Introduction

This section briefly describes the significant aspects of the Emergency Preparedness Program. The Emergency Preparedness Program is implemented through WP 12-9, WIPP Emergency Management Program.[1] The WIPP Emergency Management Program will be followed to minimize the impact of emergency events upon the health and safety of plant personnel, the general public, the environment, and the WIPP mission. In events concerning hazardous materials/waste, the WIPP Contingency Plan[2] shall be implemented.

The Emergency Response Program at the WIPP consists of the Emergency Management Program [1], the Contingency Plan,[2] and the WP 12-ER,[3] series emergency response procedures.

The WIPP facility Emergency Management Program applies to all personnel employed at or assigned to the WIPP facility, and defines emergency response roles and responsibilities. The facility Emergency Management Program does not include any required DOE radiological response to transportation accidents that occur away from the facility. Such DOE response, if requested by the state, is directed by the cognizant DOE Operations Office. WIPP facility personnel will be available to support local and state organizations in such cases, as directed by the DOE Albuquerque Operations Office.

8.5.2 Requirements

The Emergency Preparedness Program establishes the requirements and procedures in compliance with the following:

- DOE Order 151.1, Comprehensive Emergency Management System [4]
- DOE Order 232.1A, Occurrence Reporting and Processing of Operations Information [5]
- 40 CFR 264, Standards for Owners and Operators of Hazardous Waste Treatment, Storage, and Disposal Facilities [6]
- 40 CFR 265, Subpart D, Contingency Plan and Emergency Procedures [7]
- 40 CFR 265.37, Arrangements with Local Authorities [8]
- 40 CFR 265.52 (c), Content of Contingency Plan [9]
- 29 CFR 1910.120, Paragraph (p), Certain Operations Conducted Under the Resource Conservation and Recovery Act of 1976 (RCRA) [10]
- Hazardous Waste Facility Permit No. NM4890139088-TSDF Attachment F, issued by the New Mexico Environment Department October 27, 1999 [2]

8.5.3 Scope of Emergency Preparedness

The Emergency Preparedness Program applies to safety response actions relative to the following:

- Radiological emergencies
- Underground emergencies
- Industrial emergencies
- Security emergencies

8.5.4 Emergency Preparedness Planning

Emergency preparedness is addressed by the WIPP Emergency Management Program. The program identifies necessary actions for dealing with site-wide and area emergencies, and defines the lines of authority. Responsibilities of emergency response personnel and organizations are detailed in the program, including a discussion of the WIPP labor and resources required.

Operational Emergencies at the WIPP are classified by Emergency Action Levels (EALs) that provide specific predetermined criteria allowing WIPP emergency personnel to categorize Operational Emergencies. The classification of Operational Emergencies is detailed in procedure WP 12-ER3904, Categorization and Classification of Operational Emergencies.[11]

8.5.4.1 Emergency Response Organization

The Facility Shift Manager (FSM) directs the emergency event and serves as the Resource Conservation and Recovery Act (RCRA) Emergency Coordinator. The FSM may activate the Emergency Operations Center (EOC), depending on the severity or type of emergency. Upon activation of the EOC, the Crisis Management Team (CMT) assists the FSM with emergency response actions. The WIPP Emergency Management Program.[1] provides for immediate management response for making the required notification to external agencies.

The CMT is an executive decision-making group tasked specifically with assisting the FSM during an emergency. The WTS GM, or designee, will function as the CM. The CMT consists of personnel experienced and trained in dealing with emergencies. The EOC utilizes support personnel that provides technical, logistical, and administrative support during EOC activation..

All on-site emergencies shall be reported immediately to the CMRO, where specific information will be gathered relating to that incident.

8.5.4.2 Assessment Actions

Initial radiological release dose to the public calculations are performed in accordance with procedure WP 12-RE3000, Radiological Engineering Activities.[12]

The DOE, MOC, New Mexico Environment Department (NMED), and the Environmental Evaluation Group (EEG) have signed a protocol[13] that is an agreement for MOC to provide NMED and EEG with routine and non-routine (radiation alarm) effluent sample filters for independent analysis. The methods for sample filter transfer to NMED and EEG are described in the protocol,[13] and in WP 12-HP3500, Airborne Radioactivity.[14]

8.5.4.3 Notification

The WIPP Emergency Management Program[1] describes the off-site notification procedure, and maintains project credibility by providing timely and accurate information dissemination to the maximum extent permitted by the emergency situation. These emergencies include: malevolent acts, natural disasters, or highway accidents involving a WIPP shipment.

8.5.4.4 Emergency Facilities and Equipment

Facilities and equipment related to emergency response are closely monitored at the WIPP. Monthly surveillance of items such as radios, telephones, and computers are conducted using a checklist and surveillance log.

8.5.4.5 Memorandums of Understanding and/or Agreements

Memorandums of Understanding (MOUs) between the WIPP and several key community organizations are important aspects of the available protective actions governed by legal cooperation agreements. A tabular summary of these Agreements including their purpose is as follows:

- JOINT POWERS AGREEMENT BETWEEN THE UNITED STATES DEPARTMENT OF ENERGY AND THE CITY OF CARLSBAD AND THE COUNTY OF EDDY AND NEW MEXICO ENERGY, MINERALS AND NATURAL RESOURCES DEPARTMENT FOR A JOINT-USE ALTERNATE EMERGENCY OPERATIONS CENTER. This MOU directs that the parties involved shall share in establishing and maintaining an alternate EOC.

- MUTUAL AID FIRE FIGHTING AGREEMENT BETWEEN THE EDDY COUNTY COMMISSION AND THE U.S. DEPARTMENT OF ENERGY. This Agreement provides for the actual assistance of the parties in the furnishing of fire protection for the Eddy County Fire District and the WIPP Site.

- FEDERAL BUREAU OF INVESTIGATION/DEPARTMENT OF ENERGY MEMORANDUM OF UNDERSTANDING. This MOU deals with threats and criminal acts associated with theft, sabotage, or hostage attempts against the DOE-AL sites within the state of New Mexico.

- MEMORANDUM OF UNDERSTANDING BETWEEN THE DOE AND THE U.S. DEPARTMENT OF INTERIOR, ROSWELL DISTRICT. This agreement provides for a fire-management program that will ensure a timely, well-coordinated, and cost-effective response to suppress wild fire within the land withdrawal area.

- MEMORANDUM OF UNDERSTANDING BETWEEN THE UNITED STATES DEPARTMENT OF ENERGY AND THE NEW MEXICO DEPARTMENT OF PUBLIC SAFETY CONCERNING MUTUAL ASSISTANCE AND EMERGENCY MANAGEMENT. The MOU applies to any actual or potential emergency or incident that: involves a significant threat to employees, or the public; involves DOE property; involves threat to environment reportable to an off-site organization; requires combined resources of the DOE and the State; requires DOE resources unavailable from the State or vice versa; involves any other incident for which a joint determination has been made by the DOE and the State that the provisions of this MOU will apply.

- AGREEMENT BETWEEN CAO MANAGER, U.S. DEPARTMENT OF ENERGY, MISSISSIPPI POTASH INC., and IMC Kalium. This Agreement provides for mine operators having two mine rescue teams available whenever miners are underground, and backup rescue capability is deemed desirable.

- MEMORANDUM OF UNDERSTANDING: EMERGENCY RADIOLOGICAL TREATMENT CENTER FOR THE WASTE ISOLATION PILOT PLANT PROJECT BETWEEN THE U.S. DEPARTMENT OF ENERGY AND GUADALUPE MEDICAL CENTER. (The name of the medical center has been changed to Carlsbad Medical Center.) This MOU provides for an Emergency Radiological Treatment Center (ERTC) at the GUADALUPE Medical Center.

- MUTUAL AID AGREEMENT BETWEEN THE CITY OF CARLSBAD AND THE U.S. DEPARTMENT OF ENERGY. This Agreement authorizes assistance in times of declared emergency where the enormity of the emergency exceeds the response capability of the responsible jurisdiction.

- MUTUAL AID AGREEMENT BETWEEN THE CITY OF HOBBS AND THE U.S. DEPARTMENT OF ENERGY. This Agreement authorizes assistance in times of declared emergency where the magnitude of the emergency exceeds the response capability of the responsible organization.

- INTERAGENCY AGREEMENT BETWEEN THE U. S. BUREAU OF LAND MANAGEMENT AND THE U. S. DOE, AND THE U. S. NATIONAL PARK SERVICE (NPS), AND THE U. S. FOREST SERVICE. This Agreement provides for assistance in search and rescue missions and training.

- MEMORANDUM OF UNDERSTANDING BETWEEN U.S. DOE AND LEA REGIONAL HOSPITAL (L. H.). This MOU provides for an Emergency Radiological Treatment Center (ERTC) at LEA REGIONAL HOSPITAL.

8.5.4.6 Training and Exercises

Emergency management training consists of formal classroom instruction, self-paced training modules, on-the-job training, drills and exercises. This training allows all emergency management related participants to function safely and skillfully. Individuals participating in these areas must be trained, and be qualified before they are allowed to assist in emergencies.

The Emergency Management Section has developed a procedure for the effective management of drills and exercises. A coordinated program of drills and exercises enhances the ability of specialized teams and individual personnel to respond to potentially adverse situations. The Emergency Management Section conducts a variety of drills and exercises.

A full participation exercise is conducted periodically to demonstrate an integrated emergency response capability. The integrated exercise includes Federal, state, local, regulatory, and/or emergency response organizations which may include DOE/HQ, DOE/AL, and CBFO participants.

8.5.4.7 Reentry and Recovery

Guidance for the reentry and recovery following an emergency is based on regard for human life, and conditions existing at the time. The recovery process detailed in WP 12-ER3903, Event Recovery,[15] evaluated the proposed actions by comparing the risks of the hazards to the actual or potential benefits to be gained.

References for Section 8.5

1. WP 12-9, WIPP Emergency Management Program.

2. Hazardous Waste Facility Permit No. NM4890139088-TSDF Attachment F, issued by the New Mexico Environment Department October 27, 1999

3. WP 12-ER series Emergency Response procedures

4. DOE Order 151.1, Comprehensive Emergency Management System.

5. DOE Order 232.1A, Occurrence Reporting and Processing of Operations Information.

6. 40 CFR 264, Standards for Owners and Operators of Hazardous Waste Treatment, Storage, and Disposal Facilities, June 1993.

7. 40 CFR 265, Subpart D, Contingency Plan and Emergency Procedures, May 1980.

8. 40 CFR 265.37, Arrangements with Local Authorities, May 1980.

9. 40 CFR 265.52 (c), Content of Contingency Plan, May 1980.

10. 29 CFR 1910.120, Paragraph (p), Certain Operations Conducted Under the Resource Conservation and Recovery Act of 1976 (RCRA).

11. WP 12-ER3904, Categorization and Classification of Operational Emergencies.

12. WP 12-RE3000, Radiological Engineering Activities.

13. Protocol for providing Effluent Monitoring System Filters to the New Mexico Environment Department and the Environmental Evaluation Group, November 1992.

14. WP 12-HP3500, Airborne Radioactivity.

15. WP 12-ER3903, Event Recovery.

This page intentionally left blank

8.6 Security

8.6.1 Introduction

This section describes the measures taken at the Waste Isolation Pilot Plant (WIPP) during the Disposal Phase to prevent hazards. It describes the security equipment and procedures in place at the WIPP facility that continuously monitor and control entry into the active portion of the facility or Property Protection Area (PPA), as described in Chapter 2, including 24-hour security surveillance, fencing, and signs.

8.6.2 Security Procedures and Equipment

The design and operation of the WIPP facility are specifically planned to fully meet security requirements. The WIPP facility has 24-hour security surveillance, and the means to control entry to the PPA. In addition, warning signs are provided.

8.6.3 24-Hour Surveillance Systems

The WIPP facility's 24-hour surveillance system consists of security officers that provide protection 24 hours per day, 365 days per year. Security officers work to written procedures that require visitors, contractors, and vendors to log in before they are allowed to proceed to the Main Gate for access into the PPA, and require continuous monitoring of the active portion of the facility.

The major duties of the security officers are to control personnel, vehicle, and material access/egress 24 hours per day, 365 days per year. During non-operational hours, the security officers conduct documented security patrols outside of the PPA, at a minimum rate of two per 12-hour shift. In addition to the security officers, WIPP facility employees are called upon to challenge any person in the WIPP facility who is not wearing a badge, or who is not under escort when an escort is required. Further physical protection is provided by fences, protective lighting, and locked buildings.

8.6.4 Barrier and Means to Control Entry

8.6.4.1 Barrier

The surface portion of the WIPP facility PPA is contained within a 35 acre (14 hectares) fenced area. This area is surrounded by a permanent 7 ft (2.13 m) high chain-link fence, topped by three strands of barbed wire, for a total height of 8 ft (2.44 m). The fence encloses major surface structures. The regularly inspected chain-link fencing at the WIPP facility completely surrounds the active portions of the facility. Access is normally through the Main Gate on the west side of the PPA. Two other gates are available for emergency use. One of these gates is opened to allow salt trucks access to the salt pile. Use of all gates is under the supervision of security.

8.6.4.2 Means to Control Entry

Entry into the PPA, whether by personnel or vehicles, is through controlled gates and doors. WIPP facility access control procedures are designed to ensure that only properly identified and authorized persons, vehicles, and property are allowed entrance to and exit from the facility. A personnel identification and access control system is maintained within the facility. Employees identify themselves with an identification badge when entering or leaving the premises. Security officers require visitors to show proper authorization before allowing them to enter the facility. In addition, visitors are required to wear a temporary badge, and may require an authorized escort.

8.6.4.3 Warning Signs

The permanent chain-link fence surrounding the PPA is posted at approximately 50 ft (15.24 m) intervals with DOE "No Trespassing" signs, and with "Danger: Authorized Personnel Only" signs in English and Spanish. The signs are legible from a distance of 25 ft (7.62 m), and can be seen from any approach to the facility. These same signs, plus security and traffic signs, are also located on the controlled gates.

QUALITY ASSURANCE
TABLE OF CONTENTS

SECTION	TITLE	PAGE NO.
9.1	Introduction	9.1-1
9.2	Requirements	9.2-1
9.3	Management	9.3-1
9.3.1	Program and Organization	9.3-1
9.3.1.1	Program	9.3-1
9.3.1.2	Organization	9.3-1
9.3.1.2.1	General Manager	9.3-1
9.3.1.2.2	Quality Assurance Department	9.3-2
9.3.1.2.3	WTS Departments	9.3-3
9.3.2	Personnel Training and Qualification	9.3-4
9.3.3	Quality Improvement	9.3-4
9.3.3.1	Nonconformance Reports	9.3-4
9.3.3.2	Corrective Action Requests	9.3-5
9.3.3.3	Improvement Analysis	9.3-5
9.3.4	Documents and Records	9.3-5
9.3.4.1	Documents	9.3-5
9.3.4.2	Records	9.3-6
9.4	Performance	9.4-1
9.4.1	Work Processes	9.4-1
9.4.1.1	Performance of Work	9.4-1
9.4.1.2	Item Identification and Control	9.4-1
9.4.1.3	Handling, Storage, and Shipping	9.4-2
9.4.1.4	Special Processes	9.4-2
9.4.2	Design	9.4-2
9.4.3	Procurement	9.4-3
9.4.4	Inspection and Acceptance Testing	9.4-4
9.5	Assessments	9.5-1
9.5.1	Management Assessments	9.5-1
9.5.2	Independent Assessments	9.5-1
9.5.2.1	Audits	9.5-2
9.5.2.2	Surveillances	9.5-2
	References for Chapter 9	9.5-3

This page intentionally left blank

QUALITY ASSURANCE

9.1 Introduction

This chapter describes the essential features and requirements of the Washington TRU Solutions LLC (WTS) Quality Assurance (QA) Program which are pertinent to the safety analysis at the WIPP. Ten quality criteria, grouped under management, performance, and assessment categories, are described. This organization is modeled on the organization of 10 CFR 830 Subpart A, Quality Assurance Requirements,[1] and DOE O 414.1A, Quality Assurance,[2] and DOE-STD-3009-94, Preparation Guide for U.S. Department of Energy Nonreactor Nuclear Facility Safety Analysis Reports,[3] Chapter 14. A discussion of the primary QA requirements documents imposed on WIPP is included.

The QA features described include:

- QA requirements imposed on WIPP
- QA Program and Organization
- Personnel Training and Qualification
- Quality Improvement processes
- Documents and Records
- Work Processes
- Design
- Procurement
- Inspection and Acceptance Testing
- Management Assessment
- Independent Assessment

This page intentionally left blank

9.2 Requirements

The following are the primary sources which impose QA requirements on WIPP operations and therefore form the basis for the WTS QA program:

10 CFR 830 Subpart A[1] applies to contractors' work at nuclear facilities. It requires contractors to have a written QA program based on the ten criteria in 10 CFR 830.122,[4] applied using a graded approach.

DOE 414.1A,[2] applies to all DOE work that is not regulated by other agencies/programs. It applies to non-nuclear work at WIPP. It requires both DOE and its contractors to have a written QA program based on the ten criteria in DOE 414.1A,[2] applied using a graded approach

40 CFR 194.22, Quality Assurance,[5] requires DOE to have a QA program at WIPP based on ASME NQA-1-1989 Edition, Quality Assurance Program Requirements for Nuclear Facilities.[6]

CAO-94-1012, U.S. Department of Energy Carlsbad Area Office Quality Assurance Program Document (CAO QAPD),[7] consolidates and incorporates the requirements from 10 CFR 830 Subpart A[1], DOE O 414.1A [2], and NQA-1[6], and other relevant requirements documents, as applicable to WIPP. CBFO requires that all contractors that do work related to WIPP comply with the CAO QAPD.

The application of requirements is based on the minimization of risk to the general public, facility personnel, the environment, and the facility.

This page intentionally left blank

9.3 Management

9.3.1 Program and Organization

9.3.1.1 Program

The WTS QA program is defined in WP 13-1, WTS Quality Assurance Program Description (WTS QAPD)[8], and implemented in WTS procedures and implementing documents. WTS has incorporated each requirement in the CAO QAPD [7] that is applicable to WTS into the WTS QAPD, and maintains a QA procedures matrix, which identifies the WTS implementing document and section which implements each applicable requirement of the CAO QAPD. In addition, WTS reviews requirements documents cited in Section 9.2, and revisions, and maintains the WTS QAPD current with their requirements.

The requirements contained in the WTS QAPD are based on the principle that work shall be planned, documented, performed under controlled conditions, and periodically assessed to establish work item quality and process effectiveness, and promote improvement. Effective implementation of the WTS QA Program is dependent on the efforts of all levels of the WTS organization. Responsibilities are assigned to management and personnel of all WTS departments for planning, achieving, verifying, and assessing quality and promoting continuous improvement. [9]

WTS applies a graded approach, in accordance with 10 CFR 830.7, DOE O 414.1A [2], and the CAO QAPD [7], for the application of QA requirements to WIPP items and activities. The graded approach process determines the level of controls appropriate for each item or activity, commensurate with the following criteria:

- The importance of an item or activity with respect to safety, waste isolation, and regulatory compliance
- The importance of the data to be generated
- The need to demonstrate compliance with specific regulatory, design, and QA requirements
- The impact on the results of performance assessments and engineering analyses
- The magnitude of any hazard or the consequences of failure
- The life-cycle stage of a facility or item
- The programmatic mission of a facility
- The particular characteristics of a facility, item, or activity
- The relative importance of radiological and non-radiological hazards

The WTS graded approach process is implemented in WP 13-QA3005, Graded Approach to Application of QA Controls.[10]

9.3.1.2 Organization

9.3.1.2.1 General Manager

The General Manager has overall responsibility and authority for the development and implementation of the QA program.

9.3.1.2.2 Quality Assurance Department

The QA manager reports directly to the General Manager, and has overall authority and responsibility to execute the QA function, delegated by the General Manager.

The QA manager has the following specific responsibilities and authorities (delineated in the WTS QAPD [8]):

- Develop, establish, and interpret the overall WTS QA policy and ensure effective implementation
- Maintain liaison with QA organizations from other WIPP participants and other affected organizations
- Ensure QA department involvement in decisions or commitments which directly affect nuclear safety or waste isolation at the WIPP
- Prepare, maintain, and improve the WTS QAPD [8]
- Prepare and maintain QA plans and procedures that implement the QA program
- Review WTS procedures that implement the QA program
- Schedule and conduct QA independent oversight, including assessments
- Evaluate the adequacy of and approve supplier QA Programs
- Track and perform trend analysis of quality problems, and report quality problem areas
- Provide for the administrative processing of documentation concerning conditions adverse to quality
- Be sufficiently independent from cost and schedule considerations
- Have the organizational freedom to effectively communicate with other senior management positions
- Have no assigned responsibilities unrelated to the quality assurance program that would prevent appropriate attention to QA matters
- Assist other departments and sections with quality planning, documentation, measurement, problem identification, and the development of problem solutions
- Provide guidance to all applicable subordinate organizations concerning identification, control, and protection of QA records
- Have sufficient authority, access to work areas, and organizational freedom to:
    - Identify quality problems
    - Participate in development of solutions
    - Verify implementation of solutions
    - Ensure that unsatisfactory conditions are controlled until proper disposition has occurred
- Disseminate information pertinent to quality performance, including:
    - The status of development and implementation of the QA program

  - The status and resolution of significant quality problems
  - The lessons learned from significant quality problems and adverse conditions
  - Quality management practices and improvements
  - Trend analysis results
- Prepare and maintain a procedures matrix which identifies the implementing documents for the CAO QAPD[7].

Section managers reporting to the QA manager oversee specific QA functions, including:

- Assessments
- Inspections
- QA engineering
- QA programs
- Continuous improvement programs

The QA department maintains sufficient staffing levels to support its responsibilities at WIPP.

Independence of QA personnel in QA oversight of WTS activities is assured in two ways:

- The QA manager reports directly to the WTS General Manager
- QA is the only function of QA personnel (other than miscellaneous administrative duties)

9.3.1.2.3 WTS Departments

Department managers representing the primary functional organizations (including the QA department) report directly to the General Manager. The WTS organizational structure is described in Chapter 8.

Department managers are responsible for implementing the WTS QAPD[8] and have the following specific QA responsibilities (delineated in the WTS QAPD):

- Provide the necessary organization, direction, control, resources, and support to achieve their defined objectives
- Plan, perform, assess, and improve the work
- Establish and implement policies and procedures that control the quality of work in accordance with the QA program
- Provide technical and QA training for personnel performing work
- Ensure compliance with applicable regulations, DOE Orders, requirements, and laws
- Ensure that personnel adhere to procedures
- Halt unsatisfactory evolutions if necessary to ensure that cost and schedule do NOT override environmental, health, safety, and quality considerations

- Develop, implement, and maintain plans, policies, and procedures that implement applicable portions of the QA program
- Identify, investigate, report, and correct quality problems
- Disseminate information pertinent to quality performance

Line managers are responsible for defining quality requirements for work, and supporting and verifying the achievement of quality.

Workers are responsible for achieving and maintaining quality in their work, and for promptly reporting to management any condition adverse to quality.

9.3.2 Personnel Training and Qualification

Qualification requirements for personnel performing quality related work, including managers, designers, scientists, independent assessment personnel, operators, maintenance personnel, technicians, and inspectors, are established and documented in the WTS training program.

WP 13-QA.04, Quality Assurance Department Administrative Program,[11] defines training and indoctrination requirements for all WTS QA personnel. Inspection and test, nondestructive examination, and assessment personnel are qualified in accordance with the WTS QAPD;[8] WP 13-QA.04[11]; and WP 14-TR.01, WIPP Training Program,[12] to meet the requirements of NQA-1-1989[6] and supplements.

The WTS training program is described in Chapter 8.

9.3.3 Quality Improvement

WTS has established processes to detect and prevent adverse quality conditions and to promote quality improvement. Preventive actions are taken, through design, procurement, and other process controls and assessment activities described in the WTS QAPD[8], to prevent or reduce the probability of occurrence of quality problems. Items and processes that do not meet established requirements are identified, controlled, and corrected. Correction includes identifying the causes of adverse conditions and taking actions to prevent recurrence. All personnel are responsible for identifying nonconforming items, activities, and processes and are encouraged by management to suggest improvements. Quality improvement requirements are delineated in the WTS QAPD[8].

9.3.3.1 Nonconformance Reports

Control of nonconforming items, i.e., items and materials that do not conform to specified requirements or whose conformance is indeterminate, is implemented in WP 13-QA3004, Nonconformance Report.[13] Nonconforming items are documented on Nonconformance Reports; controlled to prevent inadvertent use; identified by marking, tagging, or other appropriate means; and segregated or controlled administratively. The nonconforming characteristics are reviewed, and recommended dispositions are proposed and approved. The cause of the nonconformance and actions to prevent recurrence are identified. Implementation of the disposition and actions to prevent recurrence are verified by the QA department before the Nonconformance Report is closed.

9.3.3.2 Corrective Action Requests

Control of conditions adverse to quality, i.e., programmatic and/or process failures, malfunctions, deficiencies, and nonconformances, is implemented in WP 13-QA3003, Corrective Actions Program.[14] Conditions adverse to quality are documented on Corrective Action Requests. All WTS personnel are responsible for identifying and reporting conditions adverse to quality. Responsible management investigates conditions adverse to quality and determines the corrective action response, including remedial action, extent and impact of the condition, actions to prevent recurrence, and root cause, as appropriate. The QA department verifies implementation of the corrective actions before the Corrective Action Request is closed.

Significant conditions adverse to quality, as defined in the WTS QAPD [8], are reported to and evaluated by the QA department, relevant regulatory compliance functions, and the appropriate management responsible for the condition, to determine if a work suspension order is necessary. If necessary, work is suspended until the condition is corrected and verified by the QA department. Any WIPP employee having a concern for employee safety, the safety of the environment, or the quality or regulatory compliance of an activity has the responsibility and authority to suspend the performance of that activity.

9.3.3.3 Improvement Analysis

The WTS improvement analysis process is implemented in WP 13-QA3006, Data Analysis and Trending.[15] WTS performs a periodic site evaluation and trend analysis of performance indicating data. Performance data is identified, collected, and analyzed to identify adverse quality trends and opportunities to improve items, activities, and processes. Results are reported to responsible management and organizations responsible for corrective action.

9.3.4 Documents and Records

9.3.4.1 Documents

Document review, approval, issuance, and control requirements are delineated in the WTS QAPD [8]. Documents which prescribe processes, specify requirements, or establish design are prepared, approved, issued, and controlled in accordance with approved procedures. Documents are reviewed for adequacy, correctness, and completeness, by designated technically competent reviewers, prior to approval and issuance as controlled documents. The QA department reviews documents that translate QA requirements into implementing documents, to ensure that QA program requirements are properly implemented.

Document changes are indicated in the changed document and reviewed by the organizations or technical disciplines affected. Editorial or minor changes may be made without the same level of review and approval as the original or otherwise changed document.

The distribution and use of documents and forms is controlled. Documents used to perform work are distributed to affected personnel and used at the work location. Effective dates are established for and placed on approved documents. Controls are established and maintained to identify the current status/revision of documents and forms. Obsolete or superseded documents and forms are controlled to avoid their inadvertent use.

Implementation of the WTS procedures program is described in Chapter 8.

9.3.4.2 Records

Records management requirements are delineated in the WTS QAPD[8]. The WTS records management program is implemented in WP 15-PR, WIPP Records Management Program,[16].

Records are specified, prepared, reviewed, approved, controlled, and maintained to accurately reflect completed work and facility conditions and to comply with statutory or contractual requirements. QA records are completed documents (regardless of medium) that furnish evidence of the quality of items and/or activities. Implementing procedures identify the records they generate. Such records are designated as QA records when applicable in the Records Inventory and Disposition Schedule (RIDS), defined in WP 15-PR[16]. QA records are classified according to their retention times in the RIDS.

QA records are provided reasonable protection from damage until completed, authenticated, and submitted to the records management system. Requirements and responsibilities for QA record transmittal, distribution, receipt, indexing, retention, maintenance, storage, disposition, and retrievability are established in WP 15-PR[16]. Disposition requirements for individual records are documented in the RIDS. The records storage arrangements provide adequate protection of records to preclude damage from moisture, temperature, rodent infestation, excessive light, electromagnetic fields, or stacking as deemed appropriate for the type of record being stored.

9.4 Performance

9.4.1 Work Processes

WTS's policy is that each person who performs work is responsible for the quality of his or her work, and he or she will have the goal of doing work correctly the first time. Work is performed to established, approved, and documented technical standards and administrative controls, and under controlled conditions using approved instructions, procedures, drawings, or other appropriate means. Items are identified and controlled to ensure their proper use, and maintained to prevent their damage, loss, or deterioration.

9.4.1.1 Performance of Work

Quality requirements for performance of work are delineated in the WTS QAPD[8] and implemented in WP 10-2, Maintenance Operations Instruction Manual[17] and WP 04-CO, Conduct of Operations.[18] Specific QA requirements which affect the performance of work by all departments are incorporated into each department's procedures, as documented in the QA procedures matrix.

Personnel performing work are responsible for the quality of their work. Because the individual worker is the first line in ensuring quality, personnel are required to be knowledgeable of requirements for work they perform and the capability of the tools and processes they use. Line managers ensure that personnel working under their supervision are qualified and are provided the necessary training, resources, and administrative controls to accomplish assigned tasks. Criteria describing acceptable work performance are defined for the worker. Line managers periodically assess work and related information to ensure that the desired quality is being achieved, and to identify areas needing improvement. Work is planned, authorized, and accomplished under controlled conditions using technical, quality, and implementing procedures commensurate with the complexity and risk of the work.

Individuals performing work comply with applicable implementing procedures. When work can not be accomplished as described in the implementing procedure or accomplishment of such work would result in an undesirable situation, condition adverse to quality, or an unacceptable safety risk, the work is suspended and the procedure changed in accordance with the approved procedure change process.

9.4.1.2 Item Identification and Control

Quality requirements for item identification and control are delineated in the WTS QAPD[8]. Items are identified and controlled to ensure their proper use, and maintained to prevent their damage, loss, or deterioration. Traceability requirements are specified in design documents or supporting implementation procedures. Items are identified by physical marking or by other appropriate means. Records are maintained to ensure that the item can be traced at all times from its source through installation or end use. The status of inspections, tests and special controls is identified either on the item(s) or in documents traceable to the item(s). Items with limited operating or shelf life are identified to prevent the use of items whose shelf life or operating life has expired.

WP 09-CN3021, Component Indices,[19] and WP 15-PM 3517, Stores Inventory Control,[20] implement requirements for item identification and control. Suspect/counterfeit items are controlled in accordance with WP 13-QA.05, Suspect/Counterfeit Items Program.[21]

9.4.1.3 Handling, Storage, and Shipping

Quality requirements for handling, storage, and shipping are delineated in the WTS QAPD [8]. Handling, storage, cleaning, shipping, and other means of packaging, transporting, or preservation of items is conducted in accordance with established work and inspection implementing procedures, shipping instructions, or other specified documents. Items are marked or labeled as necessary to adequately identify, maintain, and preserve them. Special environments or controls are indicated as necessary.

Handling, storage, and shipping requirements are implemented in WP 15-PM3517, Stores Inventory Control [20], and WIPP shipping procedures for various departments.

9.4.1.4 Special Processes

Quality requirements for control of special processes are delineated in the WTS QAPD [8]. Special process parameters are controlled, and specified environmental conditions are maintained through implementing procedures, which specify requirements for qualification of personnel, process(es), and equipment, and conditions necessary for completing the special process.

Nondestructive examination processes are controlled in accordance with WP 13-QA.06, QA Department Nondestructive Examination Program [22]. Code welding is controlled through the work instruction process in accordance with WP 10-2, Maintenance Operations Instruction Manual.[17]

9.4.2 Design

Quality requirements for design control are delineated in the WTS QAPD [8] and implemented in WP 09, Engineering Conduct of Operations[23]. The WTS Engineering department provides centralized engineering services for the WIPP. Engineering is responsible for design, design modifications, associated design documentation such as drawings and specifications, procurement, installation instructions, and testing of structures, systems and components (SSCs) at WIPP.

Items and processes are designed using sound engineering/scientific principles and appropriate standards. Design work, including changes, incorporates appropriate requirements such as general design criteria and design bases. Design interfaces are identified and controlled. The adequacy of design products is verified by individuals or groups other than those who performed the work. Verification work is completed before approval and implementation of the design. In establishing design controls, management is responsible to ensure that design inputs are technically correct; that design interfaces are identified; that authorities, responsibilities, and lines of communication are clearly defined; and that the design processes clearly define the acceptance criteria for the product.

Applicable design inputs are controlled by those responsible for the design. The design process is controlled by the Design Classification System, as defined in Section 3.1.3 of the RH PSAR. Design analyses are planned, controlled, and documented so that the originator and reviewer can be identifiable for each subject. Computer software used to perform design analyses is developed and qualified. New designs or modifications to existing designs undergo design verification. Design verification is performed using one or a combination of the following methods: design review, alternate calculations, or qualification testing. Design verification takes place prior to release for procurement or manufacture, construction, or to another organization for use in other design work, and is completed before relying on the item to perform its function. Design verification is performed by qualified individuals other than those who performed the design. Formal design review processes independently verify compliance of the design with applicable requirements specified in design input documents. Assumptions, design method, and output are compared and considered to disclose any discrepancies. Alternative calculations are made

with alternate methods to verify correctness of the original calculations or analyses. Qualification testing demonstrates the adequacy of performance under conditions that simulate the most adverse design conditions on all components of the system or structure. Modifications to existing designs are approved by the same groups or organizations that reviewed and approved the original design documents.

9.4.3 Procurement

Quality requirements for procurement are delineated in the WTS QAPD.[8] Procurement planning, documentation, selection of suppliers, evaluation of supplier performance, and acceptance of purchased items and services are the elements of procurement control implemented at WIPP. The WTS has established processes that ensure that procured items and services meet established technical and QA requirements and that they perform as specified.

Procurement planning and document requirements are implemented in WP 15-PC3609, Preparation of Purchase Requisitions and Purchase Requisition Change Notices,[24] and WP 13-QA3012, Supplier Evaluation/Qualification.[25] Procurement of items and services is planned and controlled to ensure that technical and QA requirements are accurate, complete, and clearly understood by suppliers. Procurement documents define the scope of work and requirements applicable to the item or service being procured. Procurement documents are prepared by WIPP personnel who complete training, as specified in WP 15-PC3609 [24], and are reviewed prior to issuance to verify that the documents include appropriate provisions to ensure that items or services meet the prescribed requirements. Procurement document reviews include representatives from affected technical organizations and the QA department.

The QA department is responsible for performing supplier evaluations for quality-related items and services, in accordance with WP 13-QA3012[25]. Supplier selection is based on an evaluation of the supplier's capability to provide items or services in accordance with procurement document requirements. The evaluation is based on the supplier's history documentation or an on-site evaluation of the supplier's facilities, personnel, and quality program implementation. Suppliers are evaluated and accepted by the QA department before starting work. Approved suppliers are evaluated periodically to verify that they continue to provide acceptable items and services.

Purchased items and services are accepted using specified methods such as source verification, receipt inspection, post-installation tests, certificates of conformance, or a combination of these methods. The QA department accepts quality-related items and services, in accordance with QA inspection procedures.

9.4.4 Inspection and Acceptance Testing

Quality requirements for Inspection and testing are delineated in the WTS QAPD.[8] Inspections and tests are planned and performed in accordance with approved implementing procedures, using established performance and acceptance criteria. Items and processes are inspected to verify quality at all stages, including source, receipt, in-process, final, and in-service inspections. Items and processes to be inspected or tested, parameters or characteristics to be evaluated, techniques to be used, acceptance criteria, hold points, and the organizations responsible for performing the tests and inspections are identified during the work planning process. Inspection and test requirements are incorporated into the work process and documented using work instructions and hold and witness points, in accordance with WP 10-2, Maintenance Operations Instruction Manual.[17] Inspection and test results are documented, and conformance to acceptance criteria is evaluated and documented.

Inspection for acceptance of quality-related items and processes is performed by the QA department. The QA department performs nondestructive examinations, receipt, source, and plant inspections, and verifies tests as required by work instructions. Inspection and nondestructive examination requirements are implemented in the QA department procedures.

Test procedures include or reference test objectives and provisions for ensuring that prerequisites have been met, that adequate instrumentation is available and used, that necessary monitoring is performed, and that suitable environmental conditions are maintained. Test results are evaluated by a responsible authority to ensure that test requirements have been satisfied. Test requirements are implemented in WP 09-SU.01, WIPP Start-Up Test Program,[26] and accomplished through test procedures or work instructions in accordance with WP 10-2 [17]. The Engineering department is responsible for determination, implementation, and verification of start-up, acceptance, and post-modification testing.

The status of inspections and tests is identified either on the items, or in documents traceable to the items, to ensure that required inspections and tests are performed, and that items that have not passed the required inspections and tests are not inadvertently installed, used, or operated. Nonconforming items and conditions adverse to quality found during inspections and tests are controlled in accordance with WTS's nonconformance procedures.

Personnel who perform inspections or tests to verify conformance of items to specified acceptance criteria are qualified in accordance with approved procedures to meet qualification requirements established in the WTS QAPD [8]. Qualification requirements are implemented in WP 13-QA.04, Quality Assurance Department Administrative Program[11], and WP 09-SU.01.[26]

Equipment used for inspections and tests is calibrated and maintained. WTS has established a system to ensure that monitoring, measuring, testing, and data collection equipment used for quality-related inspections and tests is controlled, calibrated, and adjusted at specified periods to maintain accuracy within necessary limits. Equipment used for inspections and tests is verified to have a current calibration label and documented. Equipment whose calibration has expired, which has been damaged, or whose calibration is suspect is removed from service and controlled until recalibrated. The validity of results obtained using such equipment is evaluated. Calibration requirements are implemented in WP 10-AD.01, Metrology Program[27] and WIPP maintenance procedures.

9.5 Assessments

Planned and periodic assessments are conducted to measure management effectiveness, item and service quality and process effectiveness, and to promote improvement. Management assessments are performed or directed by managers to assess the effectiveness of their organizations' management processes. Independent assessments are performed by a group or organization having authority and freedom, sufficient to carry out its responsibilities, from the line organization being assessed. Persons conducting assessments are technically qualified and knowledgeable of the items and processes to be assessed.

9.5.1 Management Assessments

Managers at every level periodically assess the performance of their organizations to determine their effectiveness and promote quality improvement. Managers are responsible for management assessments of processes and organizations under their cognizance. The WTS management assessment process involves direct participation by all levels of management, and is supported by the QA department.

Processes assessed include strategic planning, organizational interfaces, cost control, use of performance indicators, staff training and qualifications, procedures, work processes, and supervisory oversight and support. Management assessments focus on the identification and resolution of management issues and problems. Problems that hinder the organization from achieving its objectives are identified and corrected. Conditions adverse to quality found during management assessments are controlled in accordance with WTS's assessment and nonconformance procedures.

The QA department prepares a summary report of management assessment results for each department at least annually. Overall management assessment results are reported to the General Manager at least annually.

Management assessment requirements are delineated in the WTS QAPD.[8] and are implemented in WP 13-QA.08, Quality Assurance Management Assessment Program.[28]

9.5.2 Independent Assessments

WTS has implemented a process of planned periodic independent assessments, including audits and surveillances. Independent assessments are conducted to evaluate compliance with applicable QA requirements and implementing procedures, as well as the effectiveness of the overall quality program. Independent assessments are planned, performed, documented, and reported to responsible management. The types and frequencies of independent assessments are based on items' and processes' status, risk, complexity, and importance to waste isolation and the demonstration of compliance to regulatory and other statutory requirements.

Independent assessment requirements are delineated in the WTS QAPD [8] and implemented in WP 13-QA.03, Quality Assurance Department Assessment Program.[29]

9.5.2.1 Audits

The QA department plans and performs audits to determine the effectiveness of the QA program and compliance with QA implementing procedures. The QA department develops an annual audit schedule. An audit plan is developed and documented for each audit. The audit plan includes the scope, requirements, purpose, audit personnel, work to be assessed, organizations to be notified, and schedule. Audits include technical evaluations of procedures, instructions, activities, and items. Past audit results are reviewed to determine whether corrective actions were effective.

Audit team members are selected on the basis of technical qualification and knowledge of the item and/or process being audited. A lead auditor is appointed to indoctrinate and supervise the team, organize and direct the audit, and coordinate the preparation and issuance of the audit report. Lead auditors are qualified in accordance with WP 13-QA.04, Quality Assurance Department Administrative Program[11], and 14-TR.01, WIPP Training Program[12], to meet qualification requirements in the WTS QAPD [8].

Audit results are documented and reported to responsible management. Conditions adverse to quality are controlled in accordance with WTS's assessment and nonconformance procedures. Responsible management investigates and corrects audit findings and conditions adverse to quality. The QA department evaluates and approves the adequacy of proposed corrective actions and verifies their implementation.

9.5.2.2 Surveillances

QA department personnel perform surveillances of activities to verify conformance with specified requirements and to evaluate their adequacy and effectiveness. Surveillances are used to monitor work in progress; review documentation; document compliance or noncompliance with established requirements and procedures; identify actual and potential deficiencies; and provide notification to responsible managers of the status and performance of work under assessment.

Surveillance results are documented and reported to responsible management. Conditions adverse to quality are controlled in accordance with WTS's assessment and nonconformance procedures. Responsible management investigates and corrects surveillance findings and conditions adverse to quality. The QA department evaluates and approves the adequacy of proposed corrective actions and verifies their implementation.

References for Chapter 9

1. 10 CFR 830 Subpart A, Quality Assurance Requirements.

2. DOE O 414.1A, Quality Assurance.

3. DOE-STD-3009-94, Preparation Guide for U.S. Department of Energy Nonreactor Nuclear Facility Safety Analysis Reports.

4. 10 CFR 830.122, Quality Assurance Criteria

5. 40 CFR 194.22, Quality Assurance.

6. ASME NQA-1-1989 Edition, Quality Assurance Program Requirements for Nuclear Facilities.

7. CAO-94-1012, U.S. Department of Energy Carlsbad Area Office Quality Assurance Program Document, November 1999.

8. WP 13-1, WTS Quality Assurance Program Description.

9. 10 CFR 830.7, Graded Approach.

10. WP 13-QA3005, Graded Approach to Application of QA Controls

11. WP 13-QA.04, Quality Assurance Department Administrative Program

12. WP 14-TR.01, WIPP Training Program

13. WP 13-QA3004, Nonconformance Report

14. WP 13-QA3003, Corrective Actions Program

15. WP 13-QA3006, Data Analysis and Trending

16. WP 15-PR, WIPP Records Management Program

17. WP 10-2, Maintenance Operations Instruction Manual

18. WP 04-CO, Conduct of Operations

19. WP 09-CN3021, Component Indices

20. WP 15-PM 3517, Stores Inventory Control

21. WP 13-QA.05, Suspect/Counterfeit Items Program

22. WP 13-QA.06, QA Department Nondestructive Examination Program

23. WP 09, Engineering Conduct of Operations

24. WP 15-PC3609, Preparation of Purchase Requisitions and Purchase Requisition Change Notices

25. WP 13-QA3012, Supplier Evaluation/Qualification

26. WP 09-SU.01, WIPP Start-Up Test Program

27. WP 10-AD.01, Metrology Program

28. WP 13-QA.08, Quality Assurance Management Assessment Program

29. WP 13-QA.03, Quality Assurance Department Assessment Program

DECONTAMINATION AND DECOMMISSIONING
TABLE OF CONTENTS

SECTION	TITLE	PAGE NO.
10.1	Introduction	10.1-1
10.2	Decontamination and Decommissioning	10.2-1
	10.2.1 Decontamination and Decommissioning Design Features	10.2-1
	10.2.2 Decontamination and Decommissioning Activities	10.2-1
10.3	Closure, Monuments, and Records	10.3-1
10.4	Post Closure Surveillance	10.4-1
	References for Chapter 10	10.4-2

This page intentionally blank

DECONTAMINATION AND DECOMMISSIONING

10.1 Introduction

The WIPP facility is currently scheduled for a 35 year disposal phase,[1] and will be decommissioned after waste emplacement is completed. Lacking further requirements to operate the WIPP facility, decontamination of the facility to acceptable contamination and radiation levels in conjunction with facility decommissioning will be performed. The ongoing performance assessment documented in Chapter 6.1 and Appendix PAR of the Compliance Certification Application (CCA-DOE/WIPP 1996-2184)[2] of the repository and surrounding site by showing compliance with the requirements of 40 CFR 191, Subpart B[3] as a repository. As signified by the Environmental Protection Agency (EPA) approval (see Federal Register VOL. 63, No.95, May 18, 1998),[4] the WIPP facility has demonstrated acceptability as a safe repository, and, therefore, decommissioning activities are scheduled to begin near the end of its operational life.

Congress and the EPA have established post-operational requirements for the WIPP facility within the Land Withdrawal Act (LWA)[11] and 40 CFR 191, Subpart B.[3] These "Assurance Requirements," developed by the Environmental Protection Agency (EPA), ensure that cautious steps are taken by the implementing agency (in this case, the DOE) to reduce the uncertainties in projecting the behavior of the natural and engineered components for many thousands of years. A description of how the DOE satisfies these assurance requirements to the WIPP facility is described in detail in DOE/WIPP 96-2184.[2]

Decommissioning requirements applicable to the WIPP facility are included in DOE O 430.1A,[5] Life-Cycle Asset Management (previously included in DOE Order 5820.2A[6] and DOE Order 6430.1A.[7]) Additional requirements are included in the Resource Conservation and Recovery Act (RCRA) as implemented in 40 CFR Part 264[8] and Title 20 of the New Mexico Administrative Code, Part 4.1, Subpart V[9]. The Closure/Post Closure Plan[10] implements RCRA regulations.

This page intentionally blank

10.2 Decontamination and Decommissioning

The WIPP facility is designed and will be operated in a manner that will allow ease of decontamination and decommissioning (D&D). Actual D&D activities will be initiated prior to the cessation of WIPP facility operation as required by the WIPP Land Withdrawal Act.[11] At the completion of WIPP facility operations, the facility will consist of surface structures, shafts, and subsurface structures. The overall goal is to restore the surface area now housing the WIPP facility to essentially preconstruction and preoperational conditions. Surface radiological levels shall be returned to levels commensurate with regulatory guidelines. Records of the project shall be listed in the public domain and monuments or markers shall exist at the site to inform future generations of the presence of the WIPP repository (Section 10.4).

10.2.1 Decontamination and Decommissioning Design Features

During the design phase of the facility, general guidance from former DOE Order 6430.1[12] was followed to design and construct the facility. This guidance incorporated structural and internal features that would facilitate the safe and economical decontamination and decommissioning of the facility. To the extent practical, the following features and measures have been incorporated into the WIPP facility design:

- coatings provide easily cleanable surfaces
- cracks, crevices, and joints are sealed to prevent contamination spread to inaccessible areas
- exhaust filters at points of potential contamination minimize contamination of long sections of duct work and downstream exhaust equipment
- architectural or structural features allow the dismantlement and removal of equipment from areas of contamination or potentially high radiation levels to other areas for decontamination, maintenance, or repair.

10.2.2 Decontamination and Decommissioning Activities

Decontamination and decommissioning activities will involve three primary areas: surface structures, subsurface structures, and the shafts. Detailed planning for these activities will begin several years prior to their actual initiation and will incorporate currently available technologies and prescribed decontamination limits.

Surface structures will be decontaminated in accordance with current guidelines, and dismantlement of the buildings will be established in the decommissioning plan.

Decontamination operations and surveillance checks will be conducted during the decommissioning phase, demonstrating that personnel and public exposure limits are maintained as low as reasonably achievable and within the limits of 10 CFR 835, Occupational Radiation Protection.[13]

Since safety is of paramount importance, potentially hazardous operations will not begin until precautions are taken against the release of contamination. These precautions include development of decontamination plans, decontamination procedures, and safety analysis.

Decontamination is defined as the removal or reduction of radioactive or hazardous contamination from facilities, equipment, or soils by washing, chemical or electrochemical action, mechanical cleaning or other techniques to achieve a stated objective or end condition. The policy at the WIPP facility will be to decontaminate as many areas as possible, consistent with radiation protection policy. Decontamination is a necessary part of all closure activities.

Decommissioning includes surveillance and maintenance, decontamination, and dismantlement. These actions are taken to retire the facility from service with adequate regard for the health and safety of workers and the public and protection of the environment. Decommissioning is part of final facility closure only, and will involve the removal of equipment, buildings, closure of the shafts, and establishing active and passive institutional controls for the facility. The ultimate goal of decommissioning is unrestricted release or restricted use of the surface.

The objective of D&D activities at the WIPP facility is to return the surface to as close to the preconstruction condition as reasonably possible, while protecting the health and safety of the public and the environment. D&D activities are discussed in the Conceptual Decontamination and Decommissioning Plan for the Waste Isolation Pilot Plant (DOE/WIPP 95-2072).[14] Major activities planned to accomplish this objective include, but are not limited to the following:

1. Review of operational records for historical information on releases
2. Visual examination of surface structures for evidence of spills or releases
3. Performance of site contamination surveys
4. Decontamination, if necessary, of usable equipment, materials, and structures including surface facilities and areas surrounding the Waste Handling Building (WHB).
5. Disposal of equipment/materials that cannot be decontaminated but that meet waste acceptance criteria in an Hazardous Waste Management Unit (HWMU)
6. Dismantling of surface facilities
7. Dismantling of underground facilities at the time the panels are closed
8. Emplacement of final panel closure system
9. Emplacement of fill material in the underground, if required
10. Emplacement of shaft seals
11. Regrading the surface to approximately original contours
12. Initiation of active controls which includes monitoring and installation of the Permanent Marker System

These activities, in addition to common techniques such as visual inspection and records, will be performed using the best technology available at the time of closure, and will be conducted in a manner that maintains personnel exposure to radiation levels as low as reasonably achievable and exposure to hazardous constituents to levels deemed acceptable by the DOE. This Closure Plan will be amended prior to the initiation of closure activities to specify the D&D methods to be used.

Health and Safety

Before final closure activities begin, health physics personnel will conduct a radiological survey of the unit(s) being closed. A release of radionuclides could also indicate a release of hazardous constituents, in accordance with co-detection principles. If radionuclides are not detected, sampling for hazardous constituents may still be performed if there is evidence that a spill or release has occurred. The purpose of the hazards survey will be to identify potential contamination concerns that may present hazards to workers during the closure activities, and to specify any control measures necessary to reduce worker risk. This survey will provide the information necessary to identify the worker qualifications, personal protective equipment, safety awareness, work permits, exposure control programs, and emergency coordination that will be required to perform closure related activities.

This page intentionally blank

10.3 Closure, Monuments, and Records

A record of the WIPP Project shall be listed in the public domain. Active institutional controls (AIC) will be employed for at least the first 100 years after the final facility closure. In addition, a passive institutional control (PIC) system consisting of monuments or markers shall be erected at the site to inform future generations of the WIPP repository location. Detailed descriptions of the institutional controls to be implemented after closure can be found in Appendices AIC and PIC of the CCA.[2]

Closure of the WIPP facility will result in the following:

- Shafts will be closed and sealed, minimizing the intrusion of fluids into the repository.
- Inadvertent Human intrusion after closure will be unlikely.
- Physical and environmental surveillance can be minimized

Substantial permanent monuments will identify the WIPP facility. The location of these markers will be established in detail by the decommissioning plan. The markers will contain site description, date of closure, land survey data, and other information required by applicable regulations.

Detailed records shall be filed with local, state, and federal government agencies to ensure that location of the WIPP facility is easily determined. This information together with land survey data will be on record with the United States Geological Survey and other agencies as provided by the decommissioning plan. The DOE will maintain permanent administrative authority over those aspects of land management assigned by law (i.e., by the permanent withdrawal legislation).

This page intentionally blank

10.4 Post Closure Surveillance

Although the Federal Government (initially DOE) could maintain the staffing to conduct periodic surveillance of the site, a contractual arrangement with a local law enforcement or security agency would provide some distinct advantages. Among the advantages are:

- Training in patrol and surveillance activities.
- Authorization to arrest members of the general public who are found to be violating trespassing laws
- The liability associated with apprehension, attempted apprehension, or circumstances arising from attempts would remain with the law enforcement or security agency

Surveillance will consist of drive-by patrolling around the fenced perimeter, 2-3 times per week. In the course of the patrol, particular note shall be taken of the fence integrity. In addition, the locked condition of each gate shall be checked to ensure that gate integrity is maintained and there is no evidence of tampering. Surveillance should also include visual examination of the entire enclosed area for any signs of human activity. A routine summary of each month's surveillance activity shall be prepared documenting the day and time of each patrol and any unusual circumstances that may have been observed. This surveillance routine could continue throughout the active control period and for at least 100 years following the sealing of the shafts.

Upon commencement of construction of the Permanent Marker System, a routine presence at the site will once again be established. Once the Permanent Marker System is completed, the active controls program and access control measures will be evaluated and changes necessitated by construction of the Permanent Marker System will be made and implemented for the remainder of the active controls period. With construction of the Permanent Marker System, easy visual inspection of the repository footprint may be curtailed. The DOE could defer construction of the Permanent Marker System decades after completion of decommissioning. Due to filling of the repository and extensive decommissioning, maintenance of the physical security of the WIPP facility after closure can be minimized. The physical surveillance requirements will be provided in the final decommissioning plan.

Environmental surveillance after closure will include appropriate radiation monitoring, soil, vegetation, Culebra groundwater monitoring, Delaware Basin surveillance, subsidence monitoring, and wildlife sample analysis. Frequency and duration of the environmental surveillance program will be defined in the final decommissioning plan as prescribed by standards applicable at the time.

References for Chapter 10

1. DOE/NTP-96-1204, The National Transuranic Waste Management Plan, Rev. 0, September 1996.

2. DOE/WIPP 1996-2184, Title 40 CFR Part 191 Compliance Certification Application for the Waste Isolation Pilot Plant, October, 1996.

3. 40 CFR 191, Environmental Standards for the Management and Disposal of Spent Nuclear Fuel, High-level and Transuranic Radioactive Wastes, U.S. Environmental Protection Agency, September, 1985.

4. Federal Register, May 18, 1998, Part III, Environmental Protection Agency, 40 CFR Part 194.

5. DOE O 430.1A, Life-Cycle Asset Management, August 1995

6. DOE Order 5820.2A, Radioactive Waste Management, September 26, 1988.

7. DOE Order 6430.1A, General Design Criteria, April 1989 (For reference only, superceded by DOE O 420.1 and DOE O 430.1A).

8. 40 CFR Part 264, Standards for Owners and Operators of Hazardous Waste Treatment, Storage, and Disposal Facilities, U.S. Environmental Protection Agency, May 19, 1980 and subsequent amendments.

9. Title 20 of the New Mexico Administrative Code, Part 4.1, Subpart V.

10. Hazardous Waste Facility Permit No. NM4890139088-TSDF, issued by the New Mexico Environment Department October 27, 1999.

11. Public Law 102-579, as amended Sept. 23, 1996 Public Law 104-201, Subtitle F, Waste Isolation Pilot Plant Land Withdrawal Act.

12. Former DOE Order 6430, General Design Criteria Manual for Department of Energy Facilities, June 10, 1981 draft (For reference only, superceded by DOE O 420.1 and DOE O 430.1A).

13. 10 CFR 835, Occupational Radiation Protection, December 14, 1993.

14. DOE/WIPP 2072, Conceptual Decontamination and Decommissioning Plan for the Waste Isolation Pilot Plant, January 1995.

APPENDIX A

WASTE CONTAINER INVENTORY CALCULATIONS

This page intentionally left blank

From Table A-1, the volume of a waste canister is 0.89 cubic meter.

According to Table A-2, the average radioactivity of waste material in the canister is 3.72 PE-Ci/cubic meter. Total PE-C Average PE-Ci per Container

Therefore, the average radioactivity of waste material in the canister shipped to WIPP is 3.31 PE-Ci (3.72 PE-Ci/cubic meter x 0.89 cubic meter).

The radioactivity of a waste canister used in the SAR analysis is 80 PE-Ci for direct loaded waste and 240 PE-Ci for double contained waste.

Therefore, the average bounding radioactivity of a waste canister shipped to WIPP is 1.4% (3.35 PE-Ci/240 PE-Ci) of the radioactivity used in the SAR analysis or the radioactivity of a waste canister analyzed in the SAR is about 240 times the average radioactivity of a waste canister shipped to WIPP.

From the data in Table A-1, the total radioactivity (last column in Table A-1 (based on average radioactivity of 3.72 PE-Ci/m3) of the waste in different waste forms stored at different Generator Sites, and based on shipping requirements, almost no waste in the complex can exceed the bounding 240 PE-Ci per waste canister used in the SAR analysis.

The weighting factors used in the PE-Ci conversion in Table A-2 is taken from DOE/EH-0071, "Internal Dose Conversion Factors for Calculation of Dose to the Public", July 1988.

Table A-1 Radioactivity and Volume at Generator Sites by Waste Form

Final Waste Form Consolidated By Generator Site	Stored Volume, M^3	Projected Volume, M^3	Equivalent Number of Canisters*	Total PE-Ci
Combustible	**3.6E+01**	**4.9E+01**	**41**	
IN	2.1E+01	0.0E+00	24	7.9E+01
LA	1.5E+01	4.9E+01	17	5.6E+01
Filter	**4.9E+01**	**4.6E+01**	**55**	
WV	4.9E+01	4.6E+01	55	1.8E+02
Heterogeneous	**2.3E+03**	**4.4E+03**	**2578**	
BC	5.8E+02	0.0E+00	653	2.2E+03
BT	0.0E+00	6.7E+00	0	0.0E+00
IN	5.0E+01	0.0E+00	56	1.9E+02
KA	2.5E+00	5.8E+01	3	9.3E+00
LA	1.2E+01	0.0E+00	13	4.3E+01
OR	1.4E+03	2.4E+02	1609	5.3E+03
RL	2.0E+02	4.1E+03	224	7.4E+02
WV	1.8E+01	0.0E+00	20	6.6E+01
Inorganic Non-Metal	**4.6E+01**	**1.0E+02**	**52**	
AW	0.0E+00	2.1E+01	0	0.0E+00
IN	4.6E+01	0.0E+00	52	1.7E+02
Lead/Cadmium Metal Waste	**7.1E+00**	**6.7E+01**	**8**	
AW	0.0E+00	6.2E+00	0	0.0E+00
ET	8.9E-01	0.0E+00	1	3.3E+00
IN	3.6E+00	0.0E+00	4	1.3E+01
RL	2.7E+00	6.1E+01	3	9.9E+00
Solidified Inorganics	**1.1E+03**	**2.3E+02**	**1240**	
AW	1.8E+00	2.8E+01	2	6.6E+00
IN	6.5E+01	0.0E+00	73	2.4E+02
OR	1.0E+03	2.1E+02	1165	3.9E+03
Solidified Organics	**3.6E+00**	**0.0E+00**	**4**	
IN	3.6E+00	0.0E+00	4	1.3E+01
Uncategorized Metal	**3.5E+02**	**1.7E+04**	**396**	
AW	1.8E+01	0.0E+00	20	6.5E+01
IN	3.1E+01	0.0E+00	35	1.1E+02
LA	6.8E+01	5.0E+01	76	2.5E+02
RL	0.0E+00	1.7E+04	0	0.0E+00
WV	2.4E+02	0.0E+00	266	8.8E+02
Unknown	**6.3E+00**	**8.3E-01**	**7**	
ET	5.4E+00	8.3E-01	6	2.0E+01
OR	8.9E-01	0.0E+00	1	3.3E+00
Totals	**3.9E+03**	**2.2E+04**	**4381**	**1.5E+04**

* Volume of Waste Canister is 0.89 cubic meters

See ledgend at bottom of Table A-3 for generator site names

TABLE A-2 pu-239 Equivalent Radioactivity of RH Waste

	RH-TRU Waste	RH-TRU Waste	Effective Dose *	Ratio of Pu239 to Ei	RH-TRU Waste	RH-TRU Waste	Comments
	Ai/m^3	Ai	Ei	Total PE-C	Average PE	AM/m^3	See App b for equation
	Ci/m^3	Total Ci	rem/uCi		PE-Ci	PE-Ci/m^3	
Ac225	1.66E-05	1.18E-01	1.0E+01	5.1E+01	2.30E-03	3.25E-07	
Ac227	1.07E-07	7.58E-04	6.7E+03	7.6E-02	9.95E-03	1.41E-06	
Ac228	1.10E-05	7.79E-02	2.9E-01	1.8E+03	4.43E-05	6.25E-09	
Ag110	2.46E-13	1.74E-09					No contribution to PE-Ci
Ag110m	1.85E-11	1.31E-07	5.3E-02	9.6E+03	1.36E-11	1.92E-15	
Am241	8.42E-01	5.96E+03	5.2E+02	9.8E-01	6.08E+03	8.59E-01	
Am243	3.23E-08	2.29E-04	5.2E+02	9.8E-01	2.33E-04	3.29E-08	
Am245	4.06E-20	2.87E-16	6.6E-05	7.7E+06	3.72E-23	5.25E-27	
At217	1.66E-05	1.18E-01					No contribution to PE-Ci
Ba137m	2.89E+01	2.05E+05					No contribution to PE-Ci
Bi210	1.01E-09	7.15E-06	1.9E-01	2.7E+03	2.66E-09	3.76E-13	
Bi211	1.07E-07	7.58E-04					No contribution to PE-Ci
Bi212	1.04E-05	7.36E-02	2.1E-02	2.4E+04	3.03E-06	4.28E-10	
Bi213	1.66E-05	1.18E-01	1.7E-02	3.0E+04	3.92E-06	5.53E-10	
Bi214	5.05E-09	3.58E-05	6.3E-03	8.1E+04	4.42E-10	6.24E-14	
Bk249	2.80E-15	1.98E-11	1.3E+00	3.9E+02	5.05E-14	7.14E-18	
C14	2.90E-04	2.05E+00	2.1E-03	2.4E+05	8.45E-06	1.19E-09	
Cd113m	7.71E-11	5.46E-07	1.4E+00	3.6E+02	1.50E-09	2.12E-13	
Ce144	7.24E-04	5.13E+00	3.5E-01	1.5E+03	3.52E-03	4.97E-07	
Cf249	6.31E-07	4.47E-03	5.5E+02	9.3E-01	4.82E-03	6.80E-07	
Cf252	1.82E-04	1.29E+00	1.3E+02	3.9E+00	3.28E-01	4.64E-05	
Cm243	6.99E-03	4.95E+01	3.5E+02	1.5E+00	3.40E+01	4.80E-03	
Cm244	4.45E-02	3.15E+02	2.7E+02	1.9E+00	1.67E+02	2.36E-02	
Cm245	2.07E-10	1.47E-06	5.4E+02	9.4E-01	1.55E-06	2.19E-10	
Cm248	2.89E-08	2.05E-04	1.9E+03	2.7E-01	7.62E-04	1.08E-07	
Co58	1.75E-15	1.24E-11	7.1E-03	7.2E+04	1.72E-16	2.44E-20	
Co60	1.47E+00	1.04E+04	1.5E-01	3.4E+03	3.06E+00	4.32E-04	
Cr51	4.29E-10	3.04E-06	2.6E-04	2.0E+06	1.55E-12	2.19E-16	
Cs134	2.60E-03	1.84E+01	4.7E-02	1.1E+04	1.70E-03	2.40E-07	
Cs135	1.66E-08	1.18E-04	4.5E-03	1.1E+05	1.04E-09	1.46E-13	
Cs137	3.05E+01	2.16E+05	3.2E-02	1.6E+04	1.35E+01	1.91E-03	
Eu152	1.73E-01	1.22E+03	2.2E-01	2.3E+03	5.28E-01	7.46E-05	
Eu154	8.34E-02	5.90E+02	2.6E-01	2.0E+03	3.01E-01	4.25E-05	
Eu155	1.67E-02	1.18E+02	3.9E-02	1.3E+04	9.04E-03	1.28E-06	
Fe55	2.38E-05	1.69E-01	2.6E-03	2.0E+05	8.59E-07	1.21E-10	
Fr221	1.66E-05	1.18E-01	1.1E-02	4.6E+04	2.53E-06	3.58E-10	
Fr223	1.48E-09	1.05E-05	6.1E-03	8.4E+04	1.25E-10	1.77E-14	
H3	9.33E-06	6.61E-02	6.3E-05	8.1E+06	8.16E-09	1.15E-12	
Kr85	2.37E-04	1.68E+00					No contribution to PE-Ci
Mn54	3.32E-06	2.35E-02	6.4E-03	8.0E+04	2.95E-07	4.17E-11	
Nb95	9.45E-05	6.69E-01	4.5E-03	1.1E+05	5.90E-06	8.34E-10	
Nb95m	3.17E-07	2.24E-03	2.2E-03	2.3E+05	9.68E-09	1.37E-12	

TABLE A-2 pu-239 Equivalent Radioactivity of RH Waste

	RH-TRU Waste	RH-TRU Waste	Effective Dose	Ratio of Pu239 to Ei	RH-TRU Waste	RH-TRU Waste	Comments
	Ai/m^3	Ai	Ei	WF	AM	AM/m^3	See App b for equation
	Ci/m^3	Total Ci	rem/uCi		PE-Ci	PE-Ci/m^3	
Ni63	1.40E-04	9.91E-01	3.0E-03	1.7E+05	5.83E-06	8.24E-10	
Np237	4.02E-04	2.85E+00	4.9E+02	1.0E+00	2.73E+00	3.86E-04	
Np239	3.23E-08	2.29E-04	2.2E-03	2.3E+05	9.86E-10	1.39E-13	
Np240m	3.12E-15	2.21E-11					No contribution to PE-Ci
Pa231	2.70E-07	1.91E-03	1.3E+03	3.9E-01	4.87E-03	6.88E-07	
Pa233	4.02E-04	2.85E+00	8.6E-03	5.9E+04	4.80E-05	6.78E-09	
Pa234	1.92E-06	1.36E-02	7.4E-04	6.9E+05	1.97E-08	2.79E-12	
Pa234m	1.48E-03	1.05E+01					No contribution to PE-Ci
Pb209	1.66E-05	1.18E-01	9.0E-05	5.7E+06	2.07E-08	2.93E-12	
Pb210	1.01E-09	7.15E-06	1.3E+01	3.9E+01	1.82E-07	2.57E-11	
Pb211	1.07E-07	7.58E-04	8.0E-03	6.4E+04	1.19E-08	1.68E-12	
Pb212	1.04E-05	7.36E-02	1.6E-01	3.2E+03	2.31E-05	3.26E-09	
Pb214	5.05E-09	3.58E-05	6.7E-03	7.6E+04	4.70E-10	6.63E-14	
Pd107	2.45E-09	1.73E-05	1.3E-02	3.9E+04	4.42E-10	6.25E-14	
Pm147	1.52E-03	1.08E+01	3.4E-02	1.5E+04	7.17E-04	1.01E-07	
Po210	1.01E-09	7.15E-06	8.1E+00	6.3E+01	1.14E-07	1.60E-11	
Po211	3.00E-10	2.12E-06					No contribution to PE-Ci
Po212	6.66E-05	4.72E-01					No contribution to PE-Ci
Po213	1.62E-05	1.15E-01					No contribution to PE-Ci
Po214	5.05E-09	3.58E-05					No contribution to PE-Ci
Po215	1.07E-07	7.58E-04					No contribution to PE-Ci
Po216	1.04E-05	7.36E-02					No contribution to PE-Ci
Po218	5.05E-09	3.58E-05					No contribution to PE-Ci
Pr144	7.16E-04	5.07E+00	4.2E-05	1.2E+07	4.17E-07	5.90E-11	
Pu238	2.05E-01	1.45E+03	4.6E+02	1.1E+00	1.31E+03	1.85E-01	
Pu239	1.45E+00	1.03E+04	5.1E+02	1.0E+00	1.03E+04	1.45E+00	
Pu240	7.15E-01	5.06E+03	5.1E+02	1.0E+00	5.06E+03	7.15E-01	
Pu241	2.00E+01	1.42E+05	1.0E+01	5.1E+01	2.78E+03	3.92E-01	
Pu242	2.11E-05	1.49E-01	4.8E+02	1.1E+00	1.41E-01	1.99E-05	
Pu244	3.12E-15	2.21E-11	4.8E+02	1.1E+00	2.08E-11	2.94E-15	
Ra223	1.07E-07	7.58E-04	7.5E+00	6.8E+01	1.11E-05	1.57E-09	
Ra224	1.04E-05	7.36E-02	2.9E+00	1.8E+02	4.19E-04	5.91E-08	
Ra225	1.66E-05	1.18E-01	7.5E+00	6.8E+01	1.73E-03	2.44E-07	
Ra226	5.05E-09	3.58E-05	7.9E+00	6.5E+01	5.54E-07	7.82E-11	
Ra228	1.10E-05	7.79E-02	4.2E+00	1.2E+02	6.41E-04	9.06E-08	
Rh106	1.54E-03	1.09E+01	2.0E-04	2.6E+06	4.28E-06	6.04E-10	
Rn219	1.07E-07	7.58E-04					No contribution to PE-Ci
Rn220	1.04E-05	7.36E-02					No contribution to PE-Ci
Rn222	5.05E-09	3.58E-05					No contribution to PE-Ci
Ru106	1.54E-03	1.09E+01					No contribution to PE-Ci
Sb125	2.67E-04	1.89E+00	9.8E-03	5.2E+04	3.63E-05	5.13E-09	
Sb126	4.46E-06	3.16E-02	1.0E-02	5.1E+04	6.19E-07	8.75E-11	

TABLE A-2 pu-239 Equivalent Radioactivity of RH Waste

	RH-TRU Waste	RH-TRU Waste	Effective Dose	Ratio of Pu239 to Ei	RH-TRU Waste	RH-TRU Waste	Comments
	Ai/m^3	Ai	Ei	WF	AM	AM/m^3	See App b for equation
	Ci/m^3	Total Ci	rem/uCi		PE-Ci	PE-Ci/m^3	
Sb126m	3.18E-08	2.25E-04	2.8E-05	1.8E+07	1.24E-11	1.75E-15	
Se79	1.44E-08	1.02E-04	8.9E-03	5.7E+04	1.78E-09	2.51E-13	
Sm151	5.05E-05	3.58E-01	2.9E-02	1.8E+04	2.03E-05	2.87E-09	
Sn119m	1.35E-10	9.56E-07	5.3E-03	9.6E+04	9.93E-12	1.40E-15	
Sn121m	9.45E-07	6.69E-03	8.9E-03	5.7E+04	1.17E-07	1.65E-11	
Sn126	3.18E-08	2.25E-04	8.6E-02	5.9E+03	3.80E-08	5.36E-12	
Sr90	2.95E+01	2.09E+05	1.3E+00	3.9E+02	5.32E+02	7.52E-02	
Ta182	5.95E-12	4.21E-08	3.7E-02	1.4E+04	3.06E-12	4.32E-16	
Tc99	8.26E-07	5.85E-03	7.5E-03	6.8E+04	8.60E-08	1.21E-11	
Te125m	6.57E-05	4.65E-01	6.7E-03	7.6E+04	6.11E-06	8.63E-10	
Te127	2.41E-13	1.71E-09	2.9E-04	1.8E+06	9.70E-16	1.37E-19	
Te127m	2.47E-13	1.75E-09	1.9E-02	2.7E+04	6.51E-14	9.20E-18	
Th227	1.06E-07	7.50E-04	1.6E+01	3.2E+01	2.35E-05	3.33E-09	
Th228	1.04E-05	7.36E-02	3.1E+02	1.6E+00	4.48E-02	6.32E-06	
Th229	1.66E-05	1.18E-01	2.0E+03	2.6E-01	4.61E-01	6.51E-05	
Th230	1.07E-06	7.58E-03	3.2E+02	1.6E+00	4.75E-03	6.71E-07	
Th231	6.53E-04	4.62E+00	8.1E-04	6.3E+05	7.34E-06	1.04E-09	
Th232	1.31E-05	9.27E-02	1.6E+03	3.2E-01	2.91E-01	4.11E-05	
Th234	1.48E-03	1.05E+01	3.3E-02	1.5E+04	6.78E-04	9.58E-08	
Tl207	1.07E-07	7.58E-04					No contribution to PE-Ci
Tl208	3.74E-06	2.65E-02					No contribution to PE-Ci
Tl209	3.58E-07	2.53E-03					No contribution to PE-Ci
U233	2.23E-02	1.58E+02	1.3E+02	3.9E+00	4.02E+01	5.68E-03	
U234	6.03E-03	4.27E+01	1.3E+02	3.9E+00	1.09E+01	1.54E-03	
U235	6.53E-04	4.62E+00	1.2E+02	4.3E+00	1.09E+00	1.54E-04	
U236	1.37E-05	9.70E-02	1.2E+02	4.3E+00	2.28E-02	3.22E-06	
U237	4.91E-04	3.48E+00	3.3E-03	1.5E+05	2.25E-05	3.18E-09	
U238	1.48E-03	1.05E+01	1.2E+02	4.3E+00	2.47E+00	3.48E-04	
U240	3.12E-15	2.21E-11	2.1E-03	2.4E+05	9.10E-17	1.28E-20	
Y90	2.95E+01	2.09E+05	8.2E-03	6.2E+04	3.36E+00	4.74E-04	
Zr93	1.86E-07	1.32E-03	3.2E-01	1.6E+03	8.26E-07	1.17E-10	
Zr95	4.27E-05	3.02E-01	1.9E-02	2.7E+04	1.13E-05	1.59E-09	
Totals	1.43E+02	1.02E+06			2.63E+04	3.72E+00	

This Data is generated from the Table in Attachment A from the TWBIR Rev 3, June 1996
* DOE/EH-0071, "Internal dose Conversion Factors for Calculation of Dose to the Public", July 1988

Table A-3 Average PE-Ci per Container and Generator Site

Consolidated By Generator Site	Stored Volume, M^3	Projected Volume, M^3	Equivalent Number of Cannisters	Total PE-Ci	Average PE-Ci per Container
AW	1.9E+01	5.6E+01	22	7.2E+01	3.25E+00
ET	6.3E+00	8.3E-01	7	2.3E+01	3.29E+00
LA	9.4E+01	9.9E+01	106	3.5E+02	3.29E+00
RL	2.0E+02	2.2E+04	227	7.5E+02	3.30E+00
WV	3.0E+02	4.6E+01	337	1.1E+03	3.35E+00
OR	2.5E+03	4.5E+02	2777	9.2E+03	3.31E+00
KA	2.5E+00	5.8E+01	3	9.3E+00	3.10E+00
BC	5.8E+02	0.0E+00	654	2.2E+03	3.36E+00
IN	2.2E+02	0.0E+00	248	8.2E+02	3.31E+00
Totals	3.9E+03	2.3E+04	4381	1.5E+04	3.32E+00

AW - ARGONNE NATIONAL LAB WEST
BC - BATELLE COLUMBUS LABORATORY
ET - ENERGY TECHNOLOGY ENGINEERING CENTER
IN - IDAHO NATIONAL ENGINEERING LABORATORY
KA - KNOLLS ATOMIC POWER LABORATORY
LA - LAS ALAMOS NATIONAL LABORATORY
OR - OAK RIDGE NATIONAL LABORATORY
RL - HANFORD SITE
WV - WEST VALLEY DEMONSTRATION PROJECT

APPENDIX - B
Plutonium-239 Equivalent Activity

The concept of Plutonium-239 Equivalent Activity (PE-Ci) is intended to eliminate the dependency of radiological analyses on specific knowledge of the radionuclide composition of a transuranic waste stream. A unique radionuclide composition and/or distribution is associated with virtually every transuranic waste generator and storage site. By normalizing all radionuclides to a common radiotoxic hazard index, radiological analyses can be conducted for the WIPP facility, which are essentially independent of these variations. Plutonium-239, as a common component of virtually all defense transuranic wastes, was selected as the radionuclide to which the radiotoxic hazard of other transuranic radionuclides could be indexed.

Operational releases from the WIPP facility, including both routine and accident related, are airborne. There are no significant liquid release pathways during the operational phase of the facility. This, and the fact that transuranic radionuclides primarily represent inhalation hazards, allows a valid relationship to be established, which normalizes the inhalation hazard of a transuranic radionuclide to that of Pu-239 for the purpose of the WIPP radiological analyses. In effect, the radiological dose consequences of an airborne release of a quantity of transuranic radioactivity with a known radionuclide distribution will be essentially identical to that of a release of that material expressed in terms of a quantity of Pu-239.

To obtain this correlation, the 50-year effective whole-body dose commitment or dose conversion factor (DCF) for a unit intake of each radionuclide will be used.

For a known radioactivity quantity and radionuclide distribution, the Pu-239 equivalent activity is determined using radionuclide specific weighting factors. The Pu-239 equivalent activity (AM) can be characterized by:

$$AM = \sum_{i=1}^{K} A_i/WF_i$$

where K is the number of TRU* radionuclides, A_i is the activity of radionuclide i, and WF_i is the PE-Ci weighting factor for radionuclide i.

WF_i is further defined as the ratio:

$$WF_i = E_o/E_i$$

where, E_o (rem/µCi) is the 50-year effective whole-body dose commitment due to the inhalation of Pu-239 particulates with a 1.0 µm AMAD (Activity Median Aerodynamic Diameter) and a W pulmonary clearance class, and E_i (rem/µCi) is the 50-year effective whole-body dose commitment due to the inhalation of radionuclide particulates with a 1.0 µm AMAD and the pulmonary clearance class resulting in the highest 50-year effective whole-body dose commitment.

The values of E_o and E_i may be obtained from DOE/EH-0071.[1] Weighting factors calculated in this manner are presented in Table B-1 for selected radionuclides of interest.

*TRU as designated in this equation refers to any radionuclide with an atomic number greater than 92 and including U-233.

Table B-1, PE-Ci Weighting Factors for Selected Radionuclides

Radionuclide	Pulmonary Clearance Class*	Weighting Factor
Sr-90	Y	5900
Y-90	Y	62000
Cs-137	D	16000
Ba-137m		
U-233	Y	3.9
Np-237	W	1.0
Pu-236	W	3.2
Pu-238	W	1.1
Pu-239	W	1.0
Pu-240	W	1.0
Pu-241	W	51.0
Pu-242	W	1.1
Am-241	W	1.0
Am-243	W	1.0
Cm-242	W	30.0
Cm-244	W	1.9
Cf-252	Y	3.9

*(D) Daily; (W) Weekly, (Y) Yearly

References for Appendix B

1. DOE/EH-0071, Internal Dose Conversion Factors for Calculation of DOSE to the Public, July 1988.

APPENDIX - C
HAZOP SESSION SUMMARY TABLES

Table 1- 72B HAZOP Table

Study Node Event No.	Deviation	Causes	Consequences	Existing Safeguards	Actions or Recommendations	Total Rank (Cons.,Freq)	Radiological Rank (Cons.,Freq)	Comments
1 - Receipt of RH Waste								
1 - 1	High contamination found during survey	Human Error- Spread of contamination by shipper during loading	Potential for minimal exposure to personnel	Shipping Container- DOT Type B certified; Radiological Control procedures; ALARA (As Low As Reasonably Achievable) Program; Worker training; WAC controls; Emergency Response procedures	No Actions or Recommendations Identified (NAI)	1,4	Facility Worker - 1,4 Onsite Worker - 1,4 Offsite - 1,4	Radiological hazard only
1 - 2	Incorrect information on shipping papers	Human Error	Potential to exceed allowable storage time; Potential release due to gas generation; Potential for minimal exposure to personnel	WIPP Waste Information System procedures; Radiological Control procedures; Worker training; WAC controls;	NAI	1,4	Facility Worker - 1,4 Onsite Worker - 1,4 Offsite - 1,4	Radiological hazard only
1 - 3	Excessive storage time - Cask is left in storage too long	Human Error; Equipment Failure; Extended storage at generator	Potential release of radioactive material due to gas generation	Worker training; Waste handling procedures; WIPP Waste Information System procedures; Safety Analysis Report for Packaging (SARP) restrictions	NAI	1,4	Facility Worker - 1,4 Onsite Worker - 1,4 Offsite - 1,4	Radiological hazard only
1 - 4	High radiation - Direct radiological exposure	Human Error; Incorrect Radiological Work Permit information; Waste material shifts during shipment	Potential for direct radiological exposure to facility workers;	Radiological Control procedures (EPD's); Worker Training; ALARA Program; Dosimetry; Cask design including shielding	NAI	2,4	Facility Worker - 2,4 Onsite Worker - 1,4 Offsite - NA	Radiological hazard only

Table 1- 72B HAZOP Table

Study Node Event No.	Deviation	Causes	Consequences	Existing Safeguards	Actions or Recommendations	Total Rank (Cons.,Freq)	Radiological Rank (Cons.,Freq)	Comments
1 - 5	Loss of control - Transporter crashes through gate due to high speed	Human Error; Equipment Failure - Transporter brake system fails	Potential to damage the access gates; Potential to damage sections of the facility; Potential for worker injury or fatality	Drivers are trained, and qualified for proper transporter operation; Transporter is equipped with emergency brakes; Transporter maintenance provides for reliable equipment function; Access road has a 90 degree turn immediately prior to approaching the main access gate, minimum speeds achieved; Access roads are level	R-1 Verify implementation of transport truck driver training program	4,4	NA	Worker injury or fatality could result from the industrial accident (impact). No release of radiological material is postulated in this event.
1 - 6	Truck fire (inside Site gate)	Human Error; Improper or insufficient maintenance; Vehicle impact; Equipment failure; Diesel fuel on truck; Unknown ignition source	Potential for smoke to be drawn into WHB by ventilation system; Potential loss of exhaust filtration; Potential for worker injury; Potential for disruption of processing activities	Road cask design - Meets DOT Type B shipping container certification requirements; Emergency Response Procedures; Fire loading/ combustible control program; Vehicle maintenance and inspection program	R-2 Verify combustible material control program is in place.	2,4	NA	Facility worker injury could result from smoke inhalation (smoke inhalation).

Table 1- 72B HAZOP Table

Study Node Event No.	Deviation	Causes	Consequences	Existing Safeguards	Actions or Recommendations	Total Rank (Cons.,Freq)	Radiological Rank (Cons.,Freq)	Comments
1 - 7	Truck fire followed by an explosion (inside Site gate)	Human Error; Improper or insufficient maintenance; Vehicle impact; Equipment failure; Diesel fuel on truck; Unknown ignition source	Potential for worker injury or fatality; Potential for significant disruption of processing activities; Potential for smoke to be drawn into WHB by ventilation system; Potential loss of exhaust filtration	Fire loading/ combustible control program; Waste Acceptance Criteria (WAC) restrictions on waste material; Emergency Response Procedures; Vehicle maintenance and inspection program; Road cask design - Meets DOT Type B shipping container certification requirements	A-1 Verify that a transport vehicle inspection program is in place A-2 Verify combustible material control program is in place and evaluate adequacy. A-3 Verify that the DOT testing performed to certify road cask bounds the explosion scenario	4,4	NA	Worker injury or fatality could result from the industrial accident (explosion).
1 - 8	Trailer in other than proper location - Trailer overturns	Human Error Equipment Failure	Potential for damage to road cask; Potential for fire; Potential for worker injury or fatality.	WIPP Site speed limits; Transporter driver training; Waste handling procedures; Guard rails; Road cask design - Meets DOT Type B shipping container certification requirements	R-1 Same recommendation as for 1-5. Verify implementation of transport truck driver training program	4,4	NA	Worker injury or fatality could result from the industrial accident (impact). No release of radiological material is postulated.
1 - 9	Less than adequate Preventive maintenance - Landing gear failure	Human Error	Shipping cask falls off truck; Potential for worker injury or fatality.	Shipping cask design; Truck maintenance and inspection program	R-3 Verify implementation of preventive maintenance and inspection program for trucks	4,4	NA	Worker injury or fatality could result from the industrial accident. No release of radiological material is postulated.

Table 1- 72B HAZOP Table

Study Node Event No.	Deviation	Causes	Consequences	Existing Safeguards	Actions or Recommendations	Total Rank (Cons.,Freq)	Radiological Rank (Cons.,Freq)	Comments
2 - Transfer to RH Bay								
2 - 1	Truck in other than proper location - truck hits and damages tornado door hindering door closure	Human Error; Equipment Failure	Potential for significant building damage; Potential for considerable process down-time; Potential for worker injury or fatality	Waste handling procedures; Cask handling procedures; Operator training; Limited truck speed; Shipping cask design	NAI	4,4	NA	Worker injury or fatality could result from the industrial accident. No release of radiological material is postulated.
2 - 2	Truck in other than correct position results in fire water trench cover collapse	Human error; Mechanical failure	Loss of trailer stability;	Shipping cask design; Waste handling procedures; Driver training	R-4 Evaluate design of fire water trench cover for support capability	NA	NA	
2 - 3	Loss of control - Crane impact with road cask	Human Error; Equipment Failure	Potential to injure facility worker; Potential for slight damage to Road Cask	Limited crane speed; Crane operator training; Crane operating procedures; Crane design; Cask design - cask meets DOT Type B shipping container certification requirements; Preventive maintenance Program for crane	NAI	2,4	NA	Industrial hazard only

Table 1- 72B HAZOP Table

Study Node Event No.	Deviation	Causes	Consequences	Existing Safeguards	Actions or Recommendations	Total Rank (Cons.,Freq)	Radiological Rank (Cons.,Freq)	Comments
2 - 4	Diesel fire on trailer jockey (<1475°F; <30 min.)	Human Error; Improper or insufficient maintenance; Vehicle impact; Equipment Failure; Diesel fuel on trailer jockey; Unknown ignition source	Potential for smoke to be drawn through WHB by ventilation system; Potential loss of exhaust filtration; Potential for worker injury; Potential for disruption of processing activities	Road cask design - Meets DOT Type B shipping container certification requirements; Emergency Response Procedures; Fire loading/ combustible control program; Vehicle maintenance and inspection program	R-2 Same Recommendation as for 1-6. Verify combustible material control program is in place R-5 Add combustible loading limits for RH bay to FHA (Fire Hazards Analysis)	2,4	NA	Facility worker injury could result from smoke inhalation (industrial accident).
2 - 5	Diesel fire on trailer jockey followed by an explosion	Human Error; Improper or insufficient maintenance; Vehicle impact; Equipment failure; Diesel fuel on trailer jockey; Unknown ignition source	Potential for smoke to be drawn through WHB by ventilation system; Potential loss of exhaust filtration; Potential for worker injury or fatality; Potential for significant disruption of processing activities	Emergency Response Procedures; Fire loading/ combustible control program; Vehicle maintenance and inspection program; Road cask design - Meets DOT Type B shipping container certification requirements	A-4 Verify that a trailer jockey inspection program is in place A-2 Same Action as for 1-7. Verify combustible material control program is in place and evaluate adequacy. A-3 Same Action as for 1-7. Verify that the DOT testing performed to certify road cask bounds the explosion scenario	4,4	NA	Worker injury or fatality could result from the industrial accident (explosion).

Table 1- 72B HAZOP Table

Study Node Event No.	Deviation	Causes	Consequences	Existing Safeguards	Actions or Recommendations	Total Rank (Cons.,Freq)	Radiological Rank (Cons.,Freq)	Comments
3 - Cask preparation								
3 - 1	Loss of control - Crane impact with road cask See 2-3	Human Error; Mechanical Failure	Potential damage to cask during removal of impact limiter; Potential for worker injury	Limited crane speed; Crane operator training; Crane handling procedures; Crane design; Cask deign - Cask meets DOT Type B shipping container certification requirements; Preventive Maintenance Program for crane	NAI	2,4	NA	Industrial hazard only
3 - 2	Cask dropped during crane lift	Human Error (1) hold downs not released, (2) hit obstacle, (3) catch rigging on car and tips the car over Mechanical Failure - Crane/Rigging	Potential for significant damage to equipment; Potential for worker injury or fatality.	Limited crane speed; Limited lift height; Crane operator training; Crane operating procedures; Crane design; Cask deign - Cask meets DOT Type B shipping container certification requirements; Preventive maintenance program for crane	NAI	4,4	NA	Worker injury or fatality could result from the industrial accident.
3 - 3	High air activity - Airborne release during cask preparation activities (includes: 1)Head space gas sampling (outer) 2)Removing outer lid 3)Head space gas sampling (inner) 4)Installing inner lid Pintle	Equipment Failure - Leak in canister (O-ring); Human error - Canister not properly decontaminated prior to placement in road cask	Potential for minimal worker exposure; Potential spread of contamination into facility	Air sampling procedures; Radiological Control procedures; ALARA Program; Waste handling procedures	NAI	1,4	Facility Worker - 1,4 Onsite Worker - 1,4 Offsite -NA	Radiological hazard only

Table 1- 72B HAZOP Table

Study Node Event No.	Deviation	Causes	Consequences	Existing Safeguards	Actions or Recommendations	Total Rank (Cons.,Freq)	Radiological Rank (Cons.,Freq)	Comments
3 - 4	Crane drops outer lid onto cask	Human Error; Equipment Failure - Crane	Potential damage to cask; Potential damage to inner container (ICV) lid; Potential damage to outer lid sealing surface; Potential for severe worker injury	Cask design; Crane operator training; Waste handling procedures; Cask (ICV lid) design; Lifting fixture design	NAI	3,4	NA	Industrial hazard only
4 - Cask transfer to unloading room								
4 - 1	Over-speed - Impact involving transfer car with road cask - transfer car stays on rails	Human Error; Equipment Failure; foreign object on rails	Potential production downtime; Potential for damage to equipment; Potential for severe worker injury	Transfer car design; Rail design; Cask design; Operator training; Waste handling procedures; Limited transfer car speed	NAI	3,4	NA	Industrial hazard only
4 - 2	Road cask transfer car derails and falls over	Human Error - Failure to replace removable rails at cask unloading room entry; Foreign object on rails	Potential for production downtime; Potential for worker injury or fatality	Road Cask transfer car design; Cask/canister design; Operator training; Waste handling procedures;	NAI	4,4	NA	Worker injury or fatality could result from the industrial accident.

Table 1- 72B HAZOP Table

Study Node Event No.	Deviation	Causes	Consequences	Existing Safeguards	Actions or Recommendations	Total Rank (Cons.,Freq)	Radiological Rank (Cons.,Freq)	Comments
5 -Road cask transfer to shuttle car								
5 - 1	Road cask dropped in the cask unloading room	Human Error; Equipment Failure - Crane	Potential for production downtime; Potential for equipment damage; Potential for worker injury or fatality	Cask/canister design; Operator training; Waste handling procedures; Room design limits height of lift	R-6 Evaluate the HVAC (Heating, Ventilation, and Air Conditioning) DP's (Differential Pressures) with road cask unloading room door open. A-5 Verify that operating procedures exclude personnel from room during cask transfer for worker protection	4,4	NA	Worker injury or fatality could result from the industrial accident.
5 - 2	Road cask dropped into transfer cell through the floor port	Human Error; Equipment Failure (mechanical); Control Loop Failure-PLC (Programmable Logic Control)	Potential for production downtime; Potential for equipment damage; Potential for worker injury or fatality.	Cask/canister design; Operator training; Waste handling and transfer cell procedures (entry restrictions); Interlocks involving floor valve, shuttle car, crane (protects against worker error); Impact limiter on canister; Shuttle car design	R-6 Same Recommendation as for 5-1: Evaluate the HVAC DP's with road cask unloading room door open.	4,4	NA	Worker injury or fatality could result from the industrial accident.
5 - 3	Equipment performs in other than desired mode - Shield valve interlocks fail such that both shield valves can be open at the same time	Equipment Failure; Control Loop Failure-PLC (Programmable Logic Control)	Potential for air flow reversal (minimal)	Periodic functional checks of control loop	NAI	NA	NA	

Table 1- 72B HAZOP Table

Study Node Event No.	Deviation	Causes	Consequences	Existing Safeguards	Actions or Recommendations	Total Rank (Cons.,Freq)	Radiological Rank (Cons.,Freq)	Comments
5 - 4	Excessive movement - Shuttle car moves while road cask is being lowered into shuttle car	Human Error; Equipment Failure; Control loop failure	Potential equipment damage; Potential for processing delays	Operator training related to transfer operations; Periodic functional checks of control loop; Shuttle car/crane interlock; Road cask design - Meets DOT Type B shipping container certification requirements	R-7 Evaluate this scenario and consider potential need for other engineering safeguards	NA	NA	
5 - 5	Lack of attention - Individual falls through road cask unloading room floor port	Human Error	Potential for worker injury or fatality.	Transfer procedures; Operator training/qualification program	R-8 Install restraint at floor valve opening	4,4	NA	Worker injury or fatality could result from the industrial accident.
5 - 6	Floor valve closes too soon (Sooner than required time)	Equipment Failure Control Loop Failure-PLC (Programmable Logic Control)	Potential damage to cask; Potential damage to crane ropes; Potential damage to floor valve	Hoist interlock; Cask Design; Periodic functional checks of control system	NAI	NA	NA	No release of radioactive material

Table 1- 72B HAZOP Table

Study Node Event No.	Deviation	Causes	Consequences	Existing Safeguards	Actions or Recommendations	Total Rank (Cons.,Freq)	Radiological Rank (Cons.,Freq)	Comments
6 - Move cask to position in transfer cell - remove inner lid								
6 - 1	Shuttle failure causes cask to drop to transfer cell floor (Lack of equipment integrity)	Equipment Failure; Metal fatigue; failure to perform periodic maintenance	Potential for production downtime; Potential for personnel exposure caused by inner lid coming off; Potential for worker injury or fatality.	Shuttle and shuttle support design; Limited access into Transfer Cell; Shuttle operation procedures; Operator training; Cask and canister design	R-9 Verify Preventive Maintenance Program is in place for shuttle R-10 Evaluate dynamic forces on shuttle car in engineering design	4,4	Facility Worker - 2,4 Onsite Worker - 1,4 Offsite -NA	Worker injury or fatality could result from industrial accident. Potential for minor radiological impact to facility worker
6 - 2	Equipment performs in other than desired mode - Floor valve at road cask unloading room fails to close	Equipment Failure - floor valve malfunction; Control Loop Failure-PLC (Programmable Logic Control)	Potential for air flow reversal (minimal);	Periodic functional checks of control loop; Preventive Maintenance program for floor valve	NAI	NA	NA	No release of radioactive material
6 - 3	Drop of inner Road Cask lid on canister	Human Error; Control Loop Failure Mechanical Failure	Potential minor damage to canister	Canister design (DOT 7A Type A certified container); Pre-operational checks; Preventive Maintenance Program	NAI	NA	NA	No release of radioactive material
6 - 4	Other than desired position - shuttle moves while removing Road Cask inner lid	Mechanical Failure; Human error; Control loop failure	Potential for minor equipment damage	Shuttle operation procedures; Operator training; Shuttle car/crane interlock	NAI	NA	NA	No release of radioactive material

Table 1- 72B HAZOP Table

Study Node Event No.	Deviation	Causes	Consequences	Existing Safeguards	Actions or Recommendations	Total Rank (Cons.,Freq)	Radiological Rank (Cons.,Freq)	Comments
6 - 5	Incorrect position of shield valves (valves close sooner than desired)	Equipment Failure; Control Loop Failure-PLC (Programmable Logic Controller)	Potential damage to cask; Potential damage to crane ropes; Potential damage to floor valve;	Hoist interlock; Cask design	NAI	NA	NA	No release of radioactive material
7 - Load canister into facility cask								
7 - 1	Excessive movement - Shuttle moves while crane is lifting canister	Mechanical Failure; Control Loop Failure	Potential for damage to shuttle; Potential breach of the canister; Potential spread of contamination; Potential for direct radiological exposure to personnel; Potential for worker injury or fatality.	Grapple hoist interlock; Limited access into Transfer Cell; Pre-operational checks; Preventive Maintenance Program for shuttle and control equipment; Waste handling procedures; RH area ventilation system - HEPA (High Efficiency Particulate Air) filtration	R-11 Review canister and shuttle car designs and control loop design to ensure potential for inadvertent movement is addressed	4,4	Facility Worker - 4,4 Onsite Worker - 4,4 Offsite - 4,4	Worker injury or fatality could result from the industrial accident. Potential for radiological impact to facility, and to receptors onsite including in facility and offsite.
7 - 2	Canister is dropped while being lifted into facility cask; canister falls back into road cask or onto transfer room floor	Human Error; Equipment Failure - Crane, grapple; Control Loop Failure;	Potential breach of canister; Potential spread of contamination; Potential for significant damage to facility; Potential for considerable consequences to offsite individuals; Potential for significant process downtime for recovery; Potential for worker injury or fatality.	HEPA filtration; Waste handling and crane operation procedures; Operator training; Weight interlock on grapple; Shielding for workers; Impact limiter on canister; Pre-operational checks for crane and control equipment; Preventive Maintenance Program for crane equipment and control equipment; Limited access into transfer cell		4,4	Facility Worker - 4,4 Onsite Worker - 4,4 Offsite - 4,4	Worker injury or fatality could result from the industrial accident. Potential for radiological impact to offsite

Table 1- 72B HAZOP Table

Study Node Event No.	Deviation	Causes	Consequences	Existing Safeguards	Actions or Recommendations	Total Rank (Cons.,Freq)	Radiological Rank (Cons.,Freq)	Comments
7 - 3	Canister drop after lifting into facility cask, canister falls onto transfer cell shield valve.	Human Error; Equipment Failure - Crane, grapple; Control loop failure;	Potential for damage to equipment	Canister design; Waste handling and crane operation procedures; Operator training; Control panel shielding for workers; Facility cask shielding; Pre-operational checks for crane and control equipment operation; Preventive Maintenance Program for crane and control equipment	NAI	NA	NA	No release of radioactive material
7 - 4	Equipment performs in other than desired mode - Telescoping port shield retracts during transfers	Control Loop Failure	Potential for direct radiological exposure to personnel	Control loop interlock; Fail safe design of port shield; Pre-operational checks; Preventive Maintenance Program; Shielding for operator at control panel	NAI	2,4	Facility Worker - 2,4 Onsite Worker - 1,4 Offsite - NA	Radiological hazard only
7 - 5	Uncontrolled lift raises shield bell exposing canister	Control Loop Failure	Potential for direct radiological exposure to personnel	PLC interlock with facility cask top shield valve; Pre-operational checks; Preventive Maintenance Program; Shielding for operator at control panel	NAI	2,4	Facility Worker - 2,4 Onsite Worker - 1,4 Offsite - NA	Radiological hazard only
7 - 6	Shield valves (2) close on canister (sooner than desired)	Control Loop Failure	Potential breach of canister; Potential spread of contamination; Potential for direct radiological exposure to personnel; Potential for radiological impact offsite	HEPA filtration; Pre-operational checks ; Preventive Maintenance Program; Shielding for workers; Control loop interlocks; Torque limiters on close of shield valves; Differential pressures maintained by HVAC system	R-12 Evaluate impact of closing shield valve while moving shuttle car to monitoring position in transfer cell R-13 Evaluate adequacy of recovery procedures	4,4	Facility Worker - 4,4 Onsite Worker - 4,4 Offsite - 4,4	Radiological hazard only

Table 1- 72B HAZOP Table

Study Node Event No.	Deviation	Causes	Consequences	Existing Safeguards	Actions or Recommendations	Total Rank (Cons.,Freq)	Radiological Rank (Cons.,Freq)	Comments
7 - 7	Facility cask lower shield valve opens while canister is sitting on it (at other than desired time)	Control Loop Failure	Potential to drop canister to transfer cell shield valve; Potential for equipment damage; Potential for production downtime	Lower shield valve interlock with grapple position and weight; Interlock with transfer cell shield valve; Lock pins; Pre-operational checks; Preventive Maintenance Program for control equipment; Canister design	NAI	NA	NA	No release of radioactive material
7 - 8	High contamination on road cask after canister removed	Human Error-Contaminated at shipping site; Canister breach (loss of primary confinement)	Potential for spread of contamination to facility; Potential for contamination of personnel	Shipping criteria; HEPA filtration; Transfer cell design; Radiological control procedures; Cask head space sample taken during Road Cask preparation step	NAI	1,4	Facility Worker - 1,4 Onsite Worker - 1,4 Offsite - NA	Radiological hazard only. Minimal impact to facility and workers
7 - 9	Wrong canister ID with respect to shipping papers	Human Error - Generator Site Error	Operational delay (Negligible impact); Potential to exceed storage time limits for canister	WIPP Waste Information System procedures	NAI	1,4	Facility Worker - 1,4 Onsite Worker - 1,4 Offsite - NA	Radiological hazard only. Minimal impact to facility and workers

Table 1- 72B HAZOP Table

Study Node Event No.	Deviation	Causes	Consequences	Existing Safeguards	Actions or Recommendations	Total Rank (Cons.,Freq)	Radiological Rank (Cons.,Freq)	Comments
7 - 10	Hydraulic fluid fire	Leak of hydraulic fluid from facility cask rotating device; Unknown Ignition Source	Potential for damage to facility cask and other equipment (air hose, power cables); Potential adverse impact to ventilation system; Potential for generation of toxic fumes; Potential worker injury from smoke inhalation	Limited quantity (approximately 40 gallons) of hydraulic fluid; Smoke alarms; Sprinkler system; Evacuation plan for Facility Cask loading room; Emergency exit from Facility Cask loading room; Sump in room	R-14 Add combustible loading limits for waste handling building to FHA	4,4	Facility Worker - 4,4 Onsite Worker - 4,4 Offsite - 4,4	Facility worker injury could result from smoke inhalation (industrial accident). Minimal potential for radiological impact.
7 - 11	Incorrect sequence - Cask is rotated to horizontal position before shield valves are closed with grapple still attached	Control Loop Failure	Potential for direct radiological exposure to personnel	Interlocked to grapple hoist position; Grapple design will not release; Physical restraints to keep canister in place; Pre-operational checks for control system; Preventive Maintenance Program for control system; Shielding for operator at control panel	R-15 Verify rotating equipment design will preclude radiological exposure as a result of this event.	1,4	Facility Worker - 1,4 Onsite Worker - 1,4 Offsite -NA	Radiological hazard only. Minimal impact to facility and workers
7 - 12	Excessive movement - Facility cask rotates freely during rotation to horizontal position	Human Error; Mechanical Failure	Potential equipment damage	Pre-operational checks for rotation equipment function; Mechanical design of facility cask transfer car prevents over-rotation;	NAI	NA	NA	No release of radioactive material

Table 1- 72B HAZOP Table

Study Node Event No.	Deviation	Causes	Consequences	Existing Safeguards	Actions or Recommendations	Total Rank (Cons.,Freq)	Radiological Rank (Cons.,Freq)	Comments
7 - 13	Unwanted motion - Facility cask transfer car moves while rotating Facility Cask	Human Error; Mechanical Failure	Potential equipment damage	Motion interlocks; Equipment handler training; Operating procedures for Facility cask handling;	NAI	NA	NA	No release of radioactive material
8 - Facility cask loaded onto conveyance								
8 -1	Facility cask transfer car moved while turntable misaligned (movement at incorrect time)	Human Error Equipment Failure	Potential equipment damage - turntable, facility cask transfer car; Potential for process downtime	Mechanical design of transfer car; Limited speed; Operator Training; Transfer car movement procedures; Pre-operational checks; Preventive Maintenance Program	NAI	NA	NA	No release of radioactive material
8 - 2	Cask loading room door damaged from impact of facility cask transfer car	Human Error; Equipment Failure - Facility cask drive mechanism	Potential delay of process; Potential for considerable damage to facility; Potential to lose differential pressure in some areas of facility; Potential for air flow reversal	Operator Training/Procedures; Preventive Maintenance Program	NAI	1,4	Facility Worker - 1,4 Onsite Worker - 1,4 Offsite - 1,4	Minimal radiological hazard could exist as the result of the air flow reversal if there is contamination present in the facility
8 - 3	Incorrect conveyance position - Conveyance misalignment at the collar slab	Control Loop Failure; Equipment failure	Inability to load facility cask car onto conveyance; Potential for damage to pivot rails; Minor equipment damage	Pre-operational checks; Preventive Maintenance Program; Equipment design; Equipment Inspection program	NAI	NA	NA	No release of radioactive material

Table 1- 72B HAZOP Table

Study Node Event No.	Deviation	Causes	Consequences	Existing Safeguards	Actions or Recommendations	Total Rank (Cons.,Freq)	Radiological Rank (Cons.,Freq)	Comments
8 - 4	Incorrect conveyance position - Conveyance positioned at station, facility cask dropped into shaft	Human Error	Major damage to shaft; Potential breach of container; Potential for major release of radioactive materials; Potential for significant radiological exposure to personnel; Potential for considerable impact offsite; Potential worker injury or fatality	Pivot rail stops; Car stops; Training/Procedures Shift to HEPA filtration Physical barriers-shaft gates; Limited speed of Facility cask transfer car; Redundant verification of equipment readiness; Pivot rails interlocked to hoist position (hardwired); Cask unloading room doors	NAI	4,4	Facility Worker - 4,4 Onsite Worker - 4,4 Offsite - 4,4	Worker injury or fatality could result from the industrial accident (dropped cask). Radiological release would likely be extensive
8 - 5	Farther than desired position - Facility cask transfer car over- traveled onto conveyance	Human Error	Potential equipment damage	Power cable length is limited; Facility cask movement procedures; Pivot rail alignment; Door interlocks; Automatic stop - Facility cask transfer car	NAI	NA	NA	No release of radioactive material

Table 1- 72B HAZOP Table

Study Node Event No.	Deviation	Causes	Consequences	Existing Safeguards	Actions or Recommendations	Total Rank (Cons.,Freq)	Radiological Rank (Cons.,Freq)	Comments
8 - 6	Loss of brakes on conveyance while loaded with facility cask - Conveyance drops to bottom of waste shaft	Equipment Failure -Brake system	Major damage to shaft; Potential breach of container; Potential for major release of radioactive materials; Potential for significant radiological exposure to personnel; Potential for considerable impact offsite; Potential worker injury or fatality	Brake system design; Hoist equipment inspection program; Pre-operational checks; Preventive maintenance program on hoist including brake system	NAI	4,4	Facility Worker - 4,4 Onsite Worker - 4,4 Offsite - 4,4	Worker injury or fatality could result from the industrial accident (dropped conveyance with cask). Radiological release would likely be extensive
8 - 7	Less than desired stability - Facility cask transfer car not latched to conveyance	Human Error	Potential damage to shaft and conveyance; Potential for process downtime	Operator training; Operating procedures; Drive train requires power to move - (gear driven)	NAI	NA	NA	No release of radioactive material
9 - Facility cask transfer to disposal room								
9 - 1	Incorrect sequence - Pivot rails not lowered while trying to move Facility cask transfer car from conveyance	Human Error	Potential for minor damage to transfer car and conveyance; Potential for minor damage to pivot rails	Operator Training; Conveyance operating procedures	NAI	NA	NA	No release of radiological materials

Table 1- 72B HAZOP Table

Study Node Event No.	Deviation	Causes	Consequences	Existing Safeguards	Actions or Recommendations	Total Rank (Cons.,Freq)	Radiological Rank (Cons.,Freq)	Comments
9 - 2	Incorrect position - Misalignment of conveyance with pivot rails	Human Error	Potential for minor damage to transfer car and conveyance; Potential for minor damage to pivot rails	Operator Training; Conveyance operating procedures	NAI	NA	NA	No release of radiological materials
9 - 3	Derailment of Facility cask transfer car	Equipment Failure - Rail; Foreign object on rails	Potential to turn car over; Potential equipment damage- facility cask and/or rail; Considerable operating downtime; Potential worker injury or fatality	Preventive Maintenance Program for rails; Operator training program; Transfer car design; Operating procedures - limited speed of transfer car; Cask design	NAI	4,4	NA	Worker injury or fatality could result from the industrial accident. No release of radiological materials.
9 - 4	Loss of control - Forklift impacts Facility cask while in process of lifting cask	Human Error; Equipment Failure - Forklift brake malfunction	Potential to turn transfer car over; Potential equipment damage- facility cask and/or forklift; Potential for considerable process downtime; Potential worker injury or fatality	Forklift operator training; Preventive Maintenance Program for forklift (includes brake system); Cask design - limits cask damage	NAI	4,4	NA	Worker injury or fatality could result from the industrial accident. No release of radiological materials.
9 - 5	Forklift drops facility cask	Human Error; Forklift collision; Equipment Failure - forklift hydraulic system, structural failure of fork tines.	Potential for canister breach Potential equipment damage - facility cask, rail, and/or forklift; Potential worker injury or fatality	Preventive Maintenance Program on forklift; Forklift inspection program; Waste transit notification program; Forklift operator training; Operating procedures;	A-6 Verify Facility cask integrity in the event of a corner drop	4,4	Facility Worker - 4,4 Onsite Worker - 4,4 Offsite - 4,4	Worker injury or fatality could result from the industrial accident.

Table 1- 72B HAZOP Table

Study Node Event No.	Deviation	Causes	Consequences	Existing Safeguards	Actions or Recommendations	Total Rank (Cons.,Freq)	Radiological Rank (Cons.,Freq)	Comments
9 - 6	Loss of control - Forklift collision - general (No drop of Facility cask)	Human Error - Other vehicles collide with forklift; Mechanical failure	Potential equipment damage; Potential facility damage; Potential for damage to underground ventilation system; Potential worker injury or fatality	Traffic controls underground; Forklift training program; Operating procedures; Waste transit notification program; Preventive Maintenance Program on forklift; Facility cask design	NAI	4,4	NA	Worker injury or fatality could result from the industrial accident. No release of radiological materials.
9 - 7	Diesel fire on forklift	Diesel fuel leak; Unknown Ignition Source	Potential for damage to Facility cask and canister; canister breach; Potential for significant radiological exposure to personnel; Potential worker injury or fatality	Vented canister; Fire suppression system (on forklift); Underground ventilation system; Rescue program; Mine worker training; Mine evacuation plan	A-7 Verify that the fire response plan addresses this event R-16 Investigate the hydrogen generation (through radiolysis) in the vicinity of emplacement activities	4,4	Facility Worker - 4,4 Onsite Worker - 4,4 Offsite - 4,4	Worker fatality could occur as the result of the fire (industrial safety issue). Radiological impact could be considerable due to facility cask not being qualified for fire.
9 - 8	Diesel fire followed by explosion	Diesel fuel leak; Unknown Ignition Source	Potential for radiological exposure to personnel; Potential for damage to facility cask and canister; Potential for canister breach; Potential worker injury or fatality; Potential for significant damage to facility; Potential for significant adverse impact to facility operations	Vented canister; Fire suppression system (on forklift); Underground ventilation system; Rescue program; Mine worker training; Mine evacuation plan	A-7 Same Action as for 9-7. Verify that the fire response plan addresses this event R-16 Same recommendation as for 9-7. Investigate the potential for hydrogen generation (through radiolysis) in vicinity of emplacement activities	4,4	Facility Worker - 4,4 Onsite Worker - 4,4 Offsite - 4,4	Worker fatality could occur as the result of the explosion (industrial safety issue). Radiological impact could be considerable due to facility cask not withstanding the impact

Table 1- 72B HAZOP Table

Study Node Event No.	Deviation	Causes	Consequences	Existing Safeguards	Actions or Recommendations	Total Rank (Cons.,Freq)	Radiological Rank (Cons.,Freq)	Comments
10 - Canister emplacement in borehole								
10-1	Loss of control - Forklift drops Facility cask onto emplacement equipment	Human Error; Equipment Failure	Potential for damage to emplacement equipment; Breach of the waste cannister, Personnel Exposure, Release to the environment, Potential for processing delays	Equipment design	NAI	4,4	Facility Worker - 4,4 Onsite Worker - 4,4 Offsite - 4,4	
10-2	Hydraulic fluid/diesel fuel fire	Hydraulic fluid or diesel fuel leak; Unknown Ignition Source	Potential for radiological exposure to personnel; Potential for damage to facility cask and canister; Potential for canister breach; Potential worker injury or fatality	Vented canister; Fire suppression system (on forklift); Underground ventilation system; Rescue program; Mine worker training; Mine evacuation plan	A-7 Same Action as for 9-7. Verify that the fire response plan addresses this event R-16 Same recommendation as for 9-7. Investigate the potential for hydrogen generation (through radiolysis) in vicinity of emplacement activities	4,4	Facility Worker - 4,4 Onsite Worker - 4,4 Offsite - 4,4	Worker fatality could occur as the result of the fire (industrial safety issue). Radiological impact could be considerable due to facility cask not being qualified for fire

Table 1- 72B HAZOP Table

Study Node Event No.	Deviation	Causes	Consequences	Existing Safeguards	Actions or Recommendations	Total Rank (Cons.,Freq)	Radiological Rank (Cons.,Freq)	Comments
10-3	Hydraulic fluid/diesel fuel fire followed by an explosion	Hydraulic fluid or diesel fuel leak; Unknown Ignition Source;	Potential for radiological exposure to personnel; Potential for damage to facility cask and canister; Potential for canister breach; Potential worker injury or fatality; Potential for significant damage to facility; Potential for significant adverse impact to facility operations	Vented canister; Fire suppression system (on forklift); Underground ventilation system; Rescue program; Mine worker training; Mine evacuation plan	A-7 Same Action as for 9-7. Verify that the fire response plan addresses this event R-16 Same recommendation as for 9-7. Investigate the potential for hydrogen generation (through radiolysis) in vicinity of emplacement activities	4,4	Facility Worker - 4,4 Onsite Worker - 4,4 Offsite - 4,4	Worker fatality could occur as the result of the explosion (industrial safety issue). Radiological impact could be considerable due to facility cask not withstanding the impact
10-4	Incorrect position - Shield collar misalignment with facility cask	Equipment Failure; Control Loop Failure	Potential for direct radiological exposure to personnel	Control loop design; Multiple position sensors; Multiple level sensors; Pre-operational checks; Preventive Maintenance Program for emplacement equipment; Emplacement equipment design; Operator Training; Operating Procedures Physical lock between shield collar and Facility cask; Control panel indicator identifies misalignment	NAI	1,4	Facility Worker - 1,4 Onsite Worker - 1,4 Offsite - NA	Radiological hazard only. A minimal radiological exposure hazard could exist in this event

Table 1- 72B HAZOP Table

Study Node Event No.	Deviation	Causes	Consequences	Existing Safeguards	Actions or Recommendations	Total Rank (Cons.,Freq)	Radiological Rank (Cons.,Freq)	Comments
10-5	Shield valve on emplacement equipment is closed on canister during emplacement process (mis-positioned shield valve; movement sooner than desired)	Control Loop Failure; Mechanical failure on emplacement equipment	Potential damage to canister; Potential breach of canister; Potential release of radioactive material; Potential for direct radiological exposure to personnel; Potential for adverse impact offsite	Shield valve control interlocks; Torque limiter on shield valve motor; Shift to HEPA filtration Control panel indicator signals shield valve problem; Radioactive material confined by emplacement equipment; Pre-operational checks; Preventive Maintenance Program for emplacement equipment	NAI	3,4	Facility Worker - 3,4 Onsite Worker - 2,4 Offsite - 2,4	Radiological hazard only. This event could result in considerable radiological impact to facility workers
10-6	Mis-alignment of canister as it is moved into borehole	Human Error; Equipment Failure- Emplacement equipment settles and results in misalignment; Equipment Failure - level indicator malfunction	Potential damage to canister; Potential breach of canister; Potential damage to emplacement equipment; Potential release of radioactive material; Potential direct radiological exposure to personnel; Potential for adverse impact offsite;	Operator training; Waste handling (emplacement) procedures; Stall pressure limit on ram; Emplacement equipment is braced; Polyethylene liner installed into borehole to reduce friction and limit potential for interference with canister emplacement; Shift to HEPA filtration	NAI	3,4	Facility Worker - 3,4 Onsite Worker - 2,4 Offsite - 2,4	Radiological hazard only. This event could result in considerable radiological impact to facility workers
10-7	Roof Collapse during emplacement activities	Room walls, roof shift	Potential for worker injury or fatality; Potential for disruption of processing operations;	Facility cask design; Canister design; Emplacement equipment design; Motion detection instrumentation; Emergency response procedures; Room inspection program	NAI	4,4	NA	Worker injury or fatality could occur as the result of the roof collapse (mining safety issue); no radiological release is expected.

Table 1- 72B HAZOP Table

Study Node Event No.	Deviation	Causes	Consequences	Existing Safeguards	Actions or Recommendations	Total Rank (Cons.,Freq)	Radiological Rank (Cons.,Freq)	Comments
11- Decontamination Activities 1) Receipt 2) Cask prep 3) Canister transfer (worst case) 4) Post emplacement								
11-1	High contamination - Surface contamination found during normal operation	Loss of primary confinement; Human Error- Spread of contamination by shipper during loading	Potential spread of contamination and airborne radioactivity to worker	Radiological Work Permit; Worker training; Personal Protective Equipment; Shift to HEPA filtration	NAI	1,4	Facility Worker - 1,4 Onsite Worker - 1,4 Offsite - 1,4	Radiological hazard only. A minimal radiological exposure hazard could exist in this event
12 - CH/ RH Interface								
12-1	Equipment performs in other than desired mode - CH/RH conveyance loading doors open at same time	Human Error - Interlocks which prevent simultaneous opening of doors are inadvertently bypassed; Control loop malfunction	Potential diversion of exhaust path through underground vs. through RH HVAC system	HEPA- Underground Worker training; Waste handling procedures; Preventive Maintenance Program for control equipment; Scheduling of CH and RH operations	NAI	NA	NA	No release of radiological materials
12-2	Loss of control - Underground transporting vehicle collision	Human Error- Other drivers run into forklift; Mechanical failure	Potential equipment damage; Potential facility damage; Potential for damage to underground ventilation system; Potential worker injury or fatality	Traffic controls underground; Forklift training program; Waste handling procedures; Waste transit notification program; Preventive Maintenance Program on vehicles	NAI	4,4	NA	Worker injury or fatality could result from the industrial accident. No release of radiological materials.

Table 1- 72B HAZOP Table

Study Node Event No.	Deviation	Causes	Consequences	Existing Safeguards	Actions or Recommendations	Total Rank (Cons.,Freq)	Radiological Rank (Cons.,Freq)	Comments
12-3	Loss of ventilation (ventilation requirements between RH and CH processes are not maintained)	Human Error- Improper bulkhead alignment Equipment Failure - Failure of exhaust fans; Utility Failure - Loss of power	Potential to shutdown operations	Underground ventilation system alignment procedures; Worker training; Preventive Maintenance Program for ventilation system equipment; Redundant exhaust fans; Evacuation plan	NAI	NA	NA	No release of radiological materials
13 - General Facility operation - NPH, External events								
13-1	Seismic Event (Design Basis Earthquake)	Earthquake	Potential for major disruption of facility operations; Potential damage to cask and/or canister; Potential breach of canister; Potential for loss of site utilities; Potential to release radioactive material; Potential for radiological exposure to offsite personnel; Potential for fire; Potential for explosion; Potential for worker injury or fatality	Waste Handling Building designed for DBE; Emergency Response Plan; Recovery Plan; Road cask design - meets DOT Type B shipping container certification requirements; HVAC system shutdown switch	NAI	4,3	Facility Worker - 4,3 Onsite Worker - 4,3 Offsite - 4,3	Worker injury or fatality could occur as the result of the earthquake alone. Radiological impact would likely be extensive.

Table 1- 72B HAZOP Table

Study Node Event No.	Deviation	Causes	Consequences	Existing Safeguards	Actions or Recommendations	Total Rank (Cons.,Freq)	Radiological Rank (Cons.,Freq)	Comments
13-2	Tornado (Design Basis Tornado)	Tornado	Potential for disruption of processing operations; Potential to lose site utilities; Potential for worker injury or fatality; Potential for fire; Potential for explosion	Waste Handling Building designed to withstand tornados; Emergency response procedures; Recovery Plan; Weather monitored by CMR (Central Monitoring Room); Road cask design - meets DOT Type B shipping container certification requirements;	NAI	4,4	NA	Worker injury or fatality could occur as the result of the tornado.
13-3	Loss of Facility ventilation	Human Error- Improper bulkhead alignment Equipment Failure -Failure of exhaust fans; Loss of electrical power; Loss of compressed air	Potential to shutdown operations	Worker training; Ventilation system operating procedures; Preventive Maintenance Program for ventilation system equipment; Redundant Exhaust fans; Evacuation plan; Backup diesel generators; Redundant air compressors	NAI	NA	NA	No release of radiological materials
13-4	Loss of power	NPH - Earthquake, tornado, lightning, high winds, etc.; Vehicle impact; Power from commercial supplier is lost	Potential loss of filtered ventilation; Potential loss of hoist	Backup diesel generators; Redundant power feeds; Response procedures; Worker training	NAI	NA	NA	No release of radiological materials

Table 1- 72B HAZOP Table

Study Node Event No.	Deviation	Causes	Consequences	Existing Safeguards	Actions or Recommendations	Total Rank (Cons.,Freq)	Radiological Rank (Cons.,Freq)	Comments
13-5	Loss of Fire Protection (includes detection and suppression)	NPH; Loss of 180,000 gallon fire water storage tanks	Potential inability to detect and suppress fires	Design and construction of fire suppression system; Two on-site fire water storage tanks containing 180,000 gallons (One storage tank capacity sufficient for DBF); Two fire pumps, one electrical and one diesel, available; On-site fire truck and fire fighting equipment All fire related systems, training, inspection, and testing are in accordance to NFPA (National Fire Protection Association) and NEC regulations Inspections and functional tests of system performed on a periodic basis 24 hour battery backup for fire detection system available in WHB; 24 hour fire brigade	NAI	NA	NA	Ranking would be significant only if there were a fire event and the detection and suppression systems were inoperative. Otherwise, loss of the detection and suppression systems has no impact.
13-6	Range Fire	Lightning; unknown ignition source Gas pipeline explosion	Potential to disrupt site operations; Potential for smoke to enter the mine shaft; Potential for underground evacuation; Potential for smoke to enter facility buildings; Potential for facility damage	Emergency response procedures; Fire break installed; Fire fighting capability Emergency response team; Fire fighting training; 24 hour fire brigade	NAI	2,4	NA	Industrial accident only. Potential for a range fire having a direct impact on the WHB such that a radiological release would occur is minimal

Table 1- 72B HAZOP Table

Study Node Event No.	Deviation	Causes	Consequences	Existing Safeguards	Actions or Recommendations	Total Rank (Cons.,Freq)	Radiological Rank (Cons.,Freq)	Comments
13-7	Aircraft Crashes Into WHB	Personnel error; Equipment failure	Major damage to WHB; Potential for fire; Potential for worker injury or fatality Potential for major release of radioactive material; Potential for considerable radiological exposure to personnel	Physical location of site is remote; Air space above facility is not part of normal flight patterns; Physical size of WHB	NAI	4,1	Facility Worker - 4,1 Onsite Worker - 4,1 Offsite - 4,1	This event would have major radiological and non-radiological impact. However, the event is beyond extremely unlikely and does not require accident analysis. Worker injury or fatality could result from the industrial accident.
13-8	Gas Pipeline Explosion	Loss of pipe integrity, spark Natural gas explosion Range Fire	Potential for fire Potential for off-site personnel injury or fatality Potential environmental concern Potential for adverse media attention Potential to stop site operations	WHB is located one mile from nearest pipeline. Damage radius from recent explosions is a few hundred feet	NAI	2,4	Facility Worker - 0,4 Onsite Worker - 0,4 Offsite -0,4	The offsite personnel would have to be in the right location at the wrong time, and the chances of that occurring are the same as they are for the average citizen.

Table 1- 72B HAZOP Table

Study Node Event No.	Deviation	Causes	Consequences	Existing Safeguards	Actions or Recommendations	Total Rank (Cons.,Freq)	Radiological Rank (Cons.,Freq)	Comments
13-8	Cold Weather Natural Ventilation Pressure results in changes to air balance (Underground ventilation system)	Cold weather caused Natural Ventilation Pressure (NVP)	Potential to disrupt waste handling operations; Potential to, in the event of an accident involving release of radiological material, spread airborne contamination to the environment; Potential to cause deterioration of braking and electronic systems for the waste shaft hoist during prolonged exposure to salt Potential for waste shaft hoist to fail; Potential for worker injury	Operator training and qualification; Waste shaft hoist system design; Operating procedures; Air balance and flow tests; Shaft pressure monitoring; Alarms to indicate adverse air pressure conditions; WIPP ventilation simulator used for guidance; Underground ventilation remote monitoring control system (monitors air flows and d/p's and enable CMR operator to adjust vortex to control flow) Mine weather stations to monitor natural ventilation pressure(temp, relative humidity and barometric pressure); Isolation of mine splits; Backup power available to operate fans for flow through the panel area	NAI	3,4	NA	There would be no radiological hazard as the result of the cold weather NVP event unless there was already contamination present in the mine. Injury to worker related to industrial mining safety.

Table 1- 72B HAZOP Table

Study Node Event No.	Deviation	Causes	Consequences	Existing Safeguards	Actions or Recommendations	Total Rank (Cons.,Freq)	Radiological Rank (Cons.,Freq)	Comments
13-9	Hot Weather Natural Ventilation Pressure results in changes to air balance (Underground ventilation system)	Hot weather caused Natural Ventilation Pressure (NVP)	Potential to disrupt waste handling operations; Potential to, in the event of an accident involving release of radiological material, spread airborne contamination to the environment; Potential to cause deterioration of braking and electronic systems for the waste shaft hoist during prolonged exposure to salt Potential for waste shaft hoist to fail; Potential for worker injury	Operator training and qualification; Waste shaft hoist system design; Preventative maintenance procedures; Air balance and flow tests; Monitoring at bulkhead 309; Bulkhead 309 redesign (recent) to pressurize the chamber between the walls of the 309 bulkhead using fans; Procedures to maintain differential pressures in the mine; WIPP ventilation simulator used for guidance; Underground ventilation remote monitoring control system (monitors air flows and d/p's and enables CMR operator to adjust vortex to control flow) Mine weather stations to monitor natural ventilation pressure(temp, relative humidity and barometric pressure); Isolation of mine splits; Backup power available to operate fans for flow through the panel area; Alarms to indicate adverse air pressure conditions	NAI	3,4	NA	There would be no radiological hazard as the result of the hot weather NVP event unless there was already contamination present in the mine. Injury to worker related to industrial mining safety.

Table 1- 72B HAZOP Table

Study Node Event No.	Deviation	Causes	Consequences	Existing Safeguards	Actions or Recommendations	Total Rank (Cons.,Freq)	Radiological Rank (Cons.,Freq)	Comments
14 - Storage Mode								
14-1	Borehole shrinks over time before panel closes, crushing canister	Salt around borehole shifts and seals around canister	Potential breach of canister; Potential release of radioactive material; Potential personnel exposure; Potential spread of contamination to adjacent areas;	Shift to HEPA filtration; Room closure system; Canister design	NAI	2,4	Facility Worker - 2,4 Onsite Worker - 1,4 Offsite - 1,4	Radiological hazard only; a minor radiological exposure hazard for facility workers.
14-2	Buildup of explosive gas in closed room	Generation of Methane, or Hydrogen gas from Transuranic (TRU) waste material exceeds expected values	Potential to exceed VOC emission thresholds per RCRA/NMED (Resource Conservation and Recovery Act/ New Mexico Environmental Department) Potential for fire; Potential for explosion; Potential to release radioactive material; Potential for personnel injury or fatality;	Panel Closure systems; Backfill (limits propagation); Closed panel isolated from ventilation; Waste Acceptance Criteria; Shift to HEPA filtration	NAI	4,4	Facility Worker - 1,4 Onsite Worker - 1,4 Offsite - 1,4	Worker fatality could occur as the result of an explosion (mining safety event). Radiological exposure hazard is expected to be minimal.

Table 2- 10-160B HAZOP Table

Study Node Event No.	Deviation	Causes	Consequences	Existing Safeguards	Actions	Total Rank (Cons., Freq)	Radiological Rank (Cons.,Freq)	Comments
1. Cask Receipt and Transfer to RH Bay								
1A-1	Higher than expected contamination is found when inspecting trailer and 10-160B Cask at the gate prior to entry on site	Shipment discrepancy; Movement of waste during traveling.	Potential for minimal exposure to facility worker	Survey at the gate - Radiological Control procedures; Shipping Container - DOT Type B certified; WAC Requirements; Inspection and survey in transit; Personnel Protective Equipment.	No Actions Identified (NAI)	1,4	Facility Worker - 1,4 Onsite Worker - NA Offsite - NA	Radiological hazard only
1A-2	Shipping Manifest Discrepancy	Human error	Potential for loss of production; Possible return of shipment	WIPP Waste Information System Procedures; Radiological Control procedures; Worker training; WAC controls.	A-1) Check with transportation to verify procedures for checking manifest prior and during transport	1,4	NA	Note: Check the Program Implementation Guide with the States - Rebecca Walker or Jeff Winkle.
1A-3	Excessive storage time - Cask is left in storage too long	Human error; Equipment failure; Extended storage at generator	Potential release of radioactive material due to gas generation	Worker training; Waste handling procedures; WIPP Waste Information System procedures; Safety Analysis Report for Packaging (SARP) restrictions.	NAI	1,4	Facility Worker - 1,4 Onsite Worker - NA Offsite - NA	Radiological hazard only
1A-4	High radiation - Direct radiological exposure	Human error; Incorrect Radiological Work Permit information; Waste material shifts during shipment	Potential for direct radiological exposure to facility workers	Radiological Control procedures (EPD's); Worker Training; ALARA Program; Dosimetry; Cask design including shielding; Inspection and survey in transit.	NAI	2,4	Facility Worker - 2,4 Onsite Worker - 1,4 Offsite - NA	Radiological hazard only

Table 2- 10-160B HAZOP Table

Study Node Event No.	Deviation	Causes	Consequences	Existing Safeguards	Actions	Total Rank (Cons., Freq)	Radiological Rank (Cons.,Freq)	Comments
1A-5	Loss of control - Transporter crashes through gate due to high speed	Human error; Equipment failure - transporter brake system fails	Potential to damage the access gates; Potential to damage sections of the facility; Potential for worker injury or fatality	Drivers are trained, and qualified for proper transporter operation; Transporter is equipped with emergency brakes; Transporter maintenance provides for reliable equipment function; Access road has a 90 degree turn immediately prior to approaching the main access gate, minimum speeds achieved; Access roads are level.	NAI	4,4	NA	Worker injury or fatality could result from the industrial accident (impact). No release of radiological material is postulated in this event.
1A-6	Tractor trailer truck fire (inside Site gate and outside of WHB)	Human error; Improper or insufficient maintenance; Vehicle impact; Equipment failure; Diesel fuel on truck; Unknown ignition source	Potential for smoke to be drawn into WHB by ventilation system; Potential loss of exhaust filtration; Potential for worker injury; Potential for disruption of processing activities	10-160B Cask design - Meets DOT Type B shipping container certification requirements; Emergency Response Procedures; Fire Loading/ Combustible Control Program; Vehicle Maintenance and Inspection Program.	NAI	2,4	NA	Facility worker injury could result from smoke inhalation.

Table 2- 10-160B HAZOP Table

Study Node Event No.	Deviation	Causes	Consequences	Existing Safeguards	Actions	Total Rank (Cons., Freq)	Radiological Rank (Cons.,Freq)	Comments
1A-7	Tractor trailer truck fire followed by an explosion (inside Site gate and outside WHB)	Human error; Improper or insufficient maintenance; Vehicle impact; Equipment failure; Diesel fuel on truck; Unknown ignition source	Potential for worker injury or fatality; Potential for significant disruption of processing activities; Potential for smoke to be drawn into WHB by ventilation system; Potential loss of exhaust filtration	Fire Loading/ Combustible Control Program; Waste Acceptance Criteria (WAC) restrictions on waste material; Emergency Response Procedures; Vehicle Maintenance and Inspection Program; 10-160B Cask design - Meets DOT Type B shipping container certification requirements.	NAI	4,4	NA	Worker injury or fatality could result from the industrial accident (explosion).
1A-8	Trailer in other than proper location - Trailer overturns	Human error Equipment failure	Potential for damage to cask; Potential for fire; Potential for worker injury or fatality.	WIPP Site speed limits; Transporter driver training; Waste handling procedures; Guard rails; 10-160B Cask design - Meets DOT Type B shipping container certification requirements.	NAI	4,4	NA	Worker injury or fatality could result from the industrial accident (impact). No release of radiological material is postulated.
1A-9	Less than adequate preventive maintenance - Landing gear failure	Human error	Shipping cask falls off truck; Potential for worker injury or fatality.	Shipping cask design; Truck maintenance and Inspection Program.	NAI	4,4	NA	Worker injury or fatality could result from the industrial accident. No release of radiological material is postulated.

Table 2- 10-160B HAZOP Table

Study Node Event No.	Deviation	Causes	Consequences	Existing Safeguards	Actions	Total Rank (Cons., Freq)	Radiological Rank (Cons.,Freq)	Comments
1B-1	Fire water trench grate fails and trailer shifts as the trailer backs into RH Bay	Human error	Potential for equipment damage; Potential to drop the cask in the RH Bay; Potential for personnel injury	Procedures and training; Spotters; Trailer and cask design; Cask design can withstand up to 40ft.	NAI	4,4	NA	Industrial Hazard Only No cask breach due to design of 10-160B Cask.
1B-2	Diesel fire involving tractor trailer truck (<1475°F; <30 min.)	Human error; Improper or insufficient maintenance; Vehicle impact; Equipment failure; Diesel fuel on trailer jockey; Unknown ignition source	Potential for smoke to be drawn through WHB by ventilation system; Potential loss of exhaust filtration; Potential for worker injury; Potential for disruption of processing activities	10-160B Cask design - Meets DOT Type B shipping container certification requirements (withstand fire <1475°F; <30 min.); Emergency Response Procedures; Fire Loading/ Combustible Control Program; Vehicle Maintenance and Inspection Program	NAI	4,4	NA	No cask breach due to design of 10-160B Cask.
1B-3	Diesel fire involving tractor trailer truck followed by an explosion	Human error; Improper or insufficient maintenance; Vehicle impact; Equipment failure; Diesel fuel on trailer jockey; Unknown ignition source	Potential for smoke to be drawn through WHB by ventilation system; Potential loss of exhaust filtration; Potential for worker injury or fatality; Potential for significant disruption of processing activities	Emergency Response Procedures; Fire Loading/ Combustible Control Program; Vehicle Maintenance and Inspection Program; 10-160B Cask design - Meets DOT Type B shipping container certification requirements (withstand fire <1475°F; <30 min.)	NAI	4,4	NA	Worker injury or fatality could result from the explosion (industrial accident). No cask breach due to design of 10-160B Cask.

Table 2- 10-160B HAZOP Table

Study Node Event No.	Deviation	Causes	Consequences	Existing Safeguards	Actions	Total Rank (Cons., Freq)	Radiological Rank (Cons.,Freq)	Comments
1B-4	Loss of control of truck	Human error; Equipment failure	Potential for equipment damage. Potential for personnel injury. Potential for facility damage.	Preventive Maintenance Program; Procedures and training; Trailer and cask design	NAI	4,4	NA	Industrial Hazard Only
1B-5	RH Bay fire	Diesel fuel fire; Electrical fire; Hydraulic fire	No radiological release; Potential for personnel injury; Potential for facility damage.	Thermal detectors; Building construction Fire Rating Type 2 non-combustible; Cask design; Procedures and training; Fire suppression; Emergency Response; Firewater trenches would collect the diesel fuel and keep the diesel fuel from spreading; Fire Loading/ Combustible Control Program	A-2) Verify the amount of diesel fuel available.	4,4	NA	
1B-6	While moving compressed gas cylinders in RH Bay, cylinder falls - ruptures and impacts cask	Human error; Gas Cylinder failure	Potential for facility damage; Potential for personnel injury/fatality; Potential to breach drum on CH side; Potential for onsite and offsite Consequences; Potential to damage and breach 72B or 10-160B.	Procedures and training; Limited number of cylinders (2); Limited movement of cylinders; Special cart; Cylinder design	A-3) Verify cask design for missile impact.	4,4	Facility Worker - 4,4 Onsite Worker - 4,4 Offsite - 4,4	

Table 2- 10-160B HAZOP Table

Study Node Event No.	Deviation	Causes	Consequences	Existing Safeguards	Actions	Total Rank (Cons., Freq)	Radiological Rank (Cons.,Freq)	Comments
2. Remove the Upper Impact Limiter in RH Bay								
2A-1	Pinch points during removal of ratchet binders		Potential for personnel injury		NAI	1,4	NA	Industrial Hazard Only
2C-1	Impact limiter dropped onto cask	Crane failure; Mechanical failure; Human error; Equipment failure	Potential for damage to impact limiter. Potential for personnel injury. No release. Potential for equipment damage.	Training and Procedures; Crane design; Preventive Maintenance Program on crane; Design of rigging; Frequent crane inspections; Cask design to withstand weight of impact limiter.	NAI	4,4	NA	Industrial Hazard Only
2E-1	Surface contamination on cask and impact limiter - Direct radiological exposure	Seal failure; Human error	Potential for facility worker exposure. Potential for spread of contamination. Potential operational delays.	Training and Procedures; Cask design.	NAI	1,4	Facility Worker - 1,4 Onsite Worker - 1,4 Offsite - NA	
3. Remove the Cask from the Trailer in RH Bay								
3ABCDEF G-1	Pinch points during removal of cask from the trailer		Potential for personnel injury		NAI	1,4	NA	Industrial Hazard Only
3H-1	Drop cask while lifting from trailer	Crane failure; Mechanical failure; Human error; Equipment failure	Potential for facility damage. Potential for equipment damage. Potential for personnel injury/fatality.	Training and Procedures; Crane design; Preventive Maintenance Program on crane; Design of rigging; Frequent crane inspections; Limited lift height; Limit crane speed; Cask designed to withstand drop up to 40ft.	NAI	4,4	NA	Industrial Hazard Only

Table 2- 10-160B HAZOP Table

Study Node Event No.	Deviation	Causes	Consequences	Existing Safeguards	Actions	Total Rank (Cons., Freq)	Radiological Rank (Cons.,Freq)	Comments
3H-2	Contaminated water in bottom impact limiter	Human error; Cask contaminated during shipment.	Potential for spread of contamination	Procedures; Impact limiter design (drain in the bottom)	R-1) Survey the bottom of the cask before moving the cask. A-4) Verify drain installed in the impact limiter.	1,4	Facility Worker - 1,4 Onsite Worker - 1,4 Offsite - NA	Radiological Hazard Only
3I-1	Cask dropped during crane lift to Road Cask Transfer Car (RCTC)	Crane failure; Mechanical failure; Human error; Equipment failure	Potential for facility damage; Potential for equipment damage; Potential for personnel injury/fatality	Training and Procedures; Crane design; Preventive Maintenance Program on crane; Design of rigging; Frequent crane inspections; Cask designed to withstand a drop of up to 40 ft.	NAI	4,4	NA	Industrial Hazard Only
4. Remove Cask Lid in Cask in CUR								
4A-1	Possible spread of contamination while equalizing pressure in Cask	Human error; Equipment failure	Potential for facility worker exposure; (Radiological and hazardous); VOCs; Potential for spread of contamination	Training and Procedures - Pre-operational tests and preventive maintenance on tools; Radiological surveys; HEPA filter tools; WAC - vented drums requirement;	R-2) Verify that HEPA filtration tools have procedures in place.	1,4	Facility Worker - 1,4 Onsite Worker - 1,4 Offsite - NA	No airborne release expected due to HEPA filter on the tools.
4ABC-1	Pinch points while loosening bolts and connection rigging		Potential for personnel injury		NAI	1,4	NA	Industrial Hazard Only

Table 2- 10-160B HAZOP Table

Study Node Event No.	Deviation	Causes	Consequences	Existing Safeguards	Actions	Total Rank (Cons., Freq)	Radiological Rank (Cons.,Freq)	Comments
4D-1	Cask falls off of RCTC in RH Bay while lid is loose	Derailment; Vehicle impact; Shield door impact	Potential for loss of production (CH and RH); Potential for breach of drums; Potential for direct radiological exposure to facility worker; Potential for on-site consequence; Potential for off-site consequence; Potential for spread of contamination; Release of hazardous material; Potential for facility and equipment damage	Design of transfer car, shield doors, cask, rails; Emergency Response Procedure; Limited speed on transfer car; DOT Type A Drums; Ventilation system; Training and Procedures; Nuclear coating on floor; ARMs and CAMs.	A-5) Calculation note needed to verify validity of RCTC derailment.	4,4	Facility Worker - 4,4 Onsite Worker - 4,4 Offsite - 4,4	
4E-1	Pinch points while closing Cask Unloading Room Shield Door		Potential for personnel injury		NAI	1,4	NA	Industrial Hazard Only

Table 2- 10-160B HAZOP Table

Study Node Event No.	Deviation	Causes	Consequences	Existing Safeguards	Actions	Total Rank (Cons., Freq)	Radiological Rank (Cons.,Freq)	Comments
4F-1	Shield plug dropped onto stored WIPP Canister in Hot Cell	Human error; Equipment failure	Potential for breach of canister and drums; Potential for spread of contamination; Offsite and onsite consequences; Potential for release of hazardous waste; Potential to shut down operations	Training and Procedures; Facility design; Ventilation systems; CAMs; Emergency Response Procedure; Preventive Maintenance Program on crane; Crane design; Frequent crane inspections; Shield door crane interlocks mitigate direct radiation exposure and/or spread of contamination.	NAI	4,4	Facility Worker - 4,4 Onsite Worker - 4,4 Offsite - 4,4	Radiological Hazard Only
4G-1	Cask lid dropped onto the cask and drums in CUR	Human error; Equipment failure	Potential for breach of canister and drums; Potential for spread of contamination; Potential for offsite and onsite consequences; Potential for release of hazardous waste; Potential to shut down operations.	Training and Procedures; Facility design; Ventilation systems; CAMs; Emergency Response Procedure; Preventive Maintenance Program on crane; Crane design; Frequent crane inspections; Shield door crane interlocks mitigate direct radiation exposure and/or spread of contamination.	NAI	4,4	Facility Worker - 4,4 Onsite Worker - 4,4 Offsite - 4,4	Radiological Hazard Only
4H-1	Cask lid dropped onto the stored waste in the Hot Cell	Human error; Equipment failure	Potential for breach of canister and drums; Potential for spread of contamination; Potential offsite and onsite consequences; Potential for release of hazardous waste; Potential to shut down operations.	Training and Procedures; Facility design; Ventilation systems; CAMs; Emergency Response Procedure; Preventive Maintenance Program on crane; Crane design; Frequent crane inspections; Shield door crane interlocks mitigate direct radiation exposure and/or spread of contamination.	NAI	4,4	Facility Worker - 4,4 Onsite Worker - 4,4 Offsite - 4,4	Radiological Hazard Only

Table 2- 10-160B HAZOP Table

Study Node Event No.	Deviation	Causes	Consequences	Existing Safeguards	Actions	Total Rank (Cons., Freq)	Radiological Rank (Cons.,Freq)	Comments
5. Unload the Cask in the CUR								
5BD-1	Lifting fixture dropped onto the drums in the CUR	Human error; Equipment failure	Potential for breach of drums; Potential for onsite and potential for offsite consequences; Potential for release of radiological and hazardous waste; Potential to shut down operations; Potential for spread of contamination.	Training and Procedures; Facility design; Ventilation systems; CAMs; Emergency Response Procedure; Preventive Maintenance Program on crane; Crane design; Fixture design; Frequent crane inspections; Shield door crane interlocks mitigate direct radiation exposure and/or spread of contamination.	NAI	4,4	Facility Worker - 4,4 Onsite Worker - 4,4 Offsite - 4,4	Radiological Hazard Only
5CE-1	Drum carriage dropped while lifting due to carriage getting caught and over stressing fixture or basket in the CUR	Mechanical/ equipment failure (fixture, sling, etc); Human error	Potential for breach of drums; Potential for spread of contamination; Potential for offsite and onsite consequences; Potential for release of hazardous waste; Potential to shut down operations; Hot Cell and unloading room contaminated.	Fixture design; Drum carriage design; Crane design; Training and Procedures; Ventilation; Emergency Response Procedure; Preventive Maintenance Program on crane; Frequent crane inspections.	NAI	4,4	Facility Worker - 4,4 Onsite Worker - 4,4 Offsite - 4,4	Radiological Hazard Only

Table 2- 10-160B HAZOP Table

Study Node Event No.	Deviation	Causes	Consequences	Existing Safeguards	Actions	Total Rank (Cons., Freq)	Radiological Rank (Cons.,Freq)	Comments
5CE-2	Drum carriage dropped inside the Hot Cell onto stored waste	Human error; Equipment failure	Potential for breach of canister and drums; Potential for spread of contamination; Potential for offsite and onsite consequences; Potential for release of hazardous waste; Potential to shut down operations.	Fixture design; Drum carriage design; Crane design; Training and Procedures; Ventilation; Emergency Response Procedure; Preventive Maintenance Program on crane; Frequent crane inspections.	NAI	4,4	Facility Worker - 4,4 Onsite Worker - 4,4 Offsite - 4,4	
5CE-3	Broken Hot Cell window	Human error (crane, other equipment falling into window); Equipment failure; Nitrogen - over pressurized bladders in window	Potential for loss of shielding to facility worker; Potential for personnel injury	Training and procedures; Preventive maintenance on crane and windows (N_2 bladders in windows have pressure relief valves); Hot Cell leaded glass on outer layer	NAI	2,4	Facility Worker - 2,4 Onsite Worker - NA Offsite - NA	
6. Reinstall Cask Lid in the CUR								
6B-1	Cask lid dropped onto the cask in the CUR	Human error; Equipment failure	Potential for facility damage.	Training and Procedures; Facility design; Preventive Maintenance Program on crane; Crane design; Frequent crane inspections.	NAI	NA	NA	
6B-2	Cask lid dropped onto the stored waste in the Hot Cell	Same as event 4H-1						

Table 2- 10-160B HAZOP Table

Study Node Event No.	Deviation	Causes	Consequences	Existing Safeguards	Actions	Total Rank (Cons., Freq)	Radiological Rank (Cons.,Freq)	Comments
6B-3	Broken Hot Cell window (internal impact)	Same as event 5CE-3						
6D-1	Shield plug dropped onto stored WIPP Canister in Hot Cell	Same as event 4F-1						
6E-1	Pinch points while opening Cask Unloading Room Shield Door		Potential for personnel injury		NAI	1,4	NA	Industrial Hazard Only
6F-1	Pinch points while moving the RCTC out to the bay to reinstall lid		Potential for personnel injury		NAI	1,4	NA	Industrial Hazard Only
6G-1	Pinch points while connecting rigging		Potential for personnel injury		NAI	1,4	NA	Industrial Hazard Only
6H-1	During cask survey - higher than expected contamination found in RH Bay	Human error; Contamination on inside of cask, lid, and drum carriages (when present)	Potential for facility worker exposure; Potential for loss of production.	Radiological control procedures and training; Radiological monitoring equipment (CAMs); WAC requirements	NAI	1,4	Facility Worker - 1,4 Onsite Worker - NA Offsite - NA	Radiological Hazard Only
6KLMNOPQ-1	Pinch points while reinstalling primary cask lid		Potential for personnel injury		NAI	1,4	NA	Industrial Hazard Only

Table 2- 10-160B HAZOP Table

Study Node Event No.	Deviation	Causes	Consequences	Existing Safeguards	Actions	Total Rank (Cons., Freq)	Radiological Rank (Cons.,Freq)	Comments
7. Reinstall the Cask on the Trailer in RH Bay								
7AEFGHIJKL-1	Pinch points while reinstalling the cask on the trailer		Potential for personnel injury		NAI	1,4	NA	Industrial Hazard Only
7BCD-1	Cask dropped while lifting from the RCTC in RH Bay	Same as event 3H-1						Industrial Hazard Only Cask does not contain TRU waste drums.
8. Reinstall the Upper Impact Limiter in RH Bay								
8ABCDE-1	Pinch points while reinstalling the upper impact limiter on the cask		Potential for personnel injury		NAI	1,4	NA	Industrial Hazard Only
9. Move Empty WIPP Canister into Hot Cell and Prepare WIPP Canister								
9-1	Fire in Hot Cell while containing stored waste	Electrical short	Potential for equipment damage; Potential to shut down operations; Potential for drum breach; Potential for onsite and offsite consequences; Damage to Hot Cell.	Fire Loading/ Combustible Control Program; Preventive Maintenance Program on electrical equipment in the immediate area; Hot Cell design; Combustible loading inspections; Procedures & Training; Limited ignition sources	R-3) Verify FHA covers Hot Cell	4,4	Facility Worker - 4,4 Onsite Worker - 4,4 Offsite - 4,4	Radiological Hazard Only

Table 2- 10-160B HAZOP Table

Study Node Event No.	Deviation	Causes	Consequences	Existing Safeguards	Actions	Total Rank (Cons., Freq)	Radiological Rank (Cons.,Freq)	Comments
9-2	Fire/Explosion in Hot Cell while containing stored waste	Flammable gas generation in drum and ignites (metal to metal contact causes spark)	Potential for drum breach; Potential for onsite and offsite consequences; Damage to Hot Cell.	WAC - no flammable items in drum; Certificate of Compliance - Limits on gas generation and limited storage; Shield door closed in the CUR and/or Shield plug in Hot Cell is in place.	NAI	4,4	Facility Worker - 4,4 Onsite Worker - 4,4 Offsite - 4,4	Radiological Hazard Only
9-3	Crane drops off of ceiling supports in Hot Cell	Natural Phenomenon - Seismic and Tornado; External Events - Loss of power; Equipment failure	None - event is prevented by DBE and DBT qualifications of crane	Crane is DBE and DBT qualified	NAI	NA	NA	Event prevented by DBE and DBT qualifications
9-4	Gas cylinder impacts the Hot Cell window (externally - from the Operation Gallery)	Cylinder falls over and becomes a missile	Potential for loss of shielding to worker; Personnel fatality; Potential for facility damage.	Cylinders are chained to cart or wall; Training and procedures; Cylinder and cap design; Hot Cell window design; Preventive Maintenance Program	NAI	4,4	Facility Worker - 2,4 Onsite Worker - NA Offsite - NA	Facility assumes no breach of drums
9-5	Shield plug lift fixture falls over in the Hot Cell	Hit with crane, load on crane impacts window, or equipment.	Potential for broken window (loss of shielding); Potential for onsite/offsite consequences; Potential for facility worker exposure; Potential for Personnel injury	Training and procedures; Ventilation system; Hot Cell leaded glass (outer layer)	NAI	4,4	Facility Worker - 4,4 Onsite Worker - 4,4 Offsite - 4,4	

Table 2- 10-160B HAZOP Table

Study Node Event No.	Deviation	Causes	Consequences	Existing Safeguards	Actions	Total Rank (Cons., Freq)	Radiological Rank (Cons.,Freq)	Comments
9-6	External fire to Hot Cell	Hydraulic fuel fire; Fire in the crane maintenance room; Electrical fire	Potential to form toxic gas from neoprene; Industrial hazards from a fire.	Fire brigade - fire protection; Fire Loading/ Combustible Control Program; Training and procedures; Fire detection in Operation Gallery (outside of Hot Cell); Sprinkler system; Hot Cell design; Ventilation.	A-6) Verify gallery combustible loading with facility FPE.	2,4	NA	Industrial Hazard Only Concrete structure prevents fire from spreading to Hot Cell
9-7	Criticality in the Hot Cell	NA	NA	NA	A-7) Need to update criticality analysis to address this deviation.	NA	NA	HAZOP did not address criticality, but will be addressed in separate evaluation.
9-8	Mishandling of HEPA Filter	Human error	Potential for facility worker exposure	Training and procedures for filter change-out; Personal Protective Equipment; Bag-out process for HEPA filter change-out	NAI	2,4	Facility Worker - 2,4 Onsite Worker - NA Offsite - NA	Covered as part of Maintenance Program
9-9	High Radiation - Direct radiological exposure	Human error; Worker inadvertently enters an area where waste handling is happening. (Transfer Cell or Hot Cell)	Potential for facility worker exposure	Training and procedures; Administrative controls for lock and key; ARM indicators in the Hot Cell and Transfer Cell; .	NAI	3,4	Facility Worker - 3,4 Onsite Worker - NA Offsite - NA	Radiological Hazard Only

Table 2- 10-160B HAZOP Table

Study Node Event No.	Deviation	Causes	Consequences	Existing Safeguards	Actions	Total Rank (Cons., Freq)	Radiological Rank (Cons.,Freq)	Comments
9-10	High Radiation - Direct radiological exposure	Human error; Inadvertent entry into CUR while CUR shield valve is open while loading a WIPP Canister into the shuttle car from the Hot Cell	Potential for facility worker exposure (minimal) from Hot Cell	Training and procedures; Facility design (no streaming path).	R-4) Add interlock between CUR shield valve and Hot Cell shield valve	1,4	Facility Worker - 1,4 Onsite Worker - NA Offsite - NA	Radiological Hazard Only No direct radiation
9-11	High Radiation - Direct radiological exposure	Human error; Inadvertent entry into Facility Cask Loading Room while Transfer Cell shield valve is open while loading a WIPP Canister into the shuttle car.	Potential for facility worker exposure (minimal) from Hot Cell	Training and procedures; Facility design (no streaming path).	R-5) Add interlock between Transfer Cell shield valve and Hot Cell shield valve.	1,4	Facility Worker - 1,4 Onsite Worker - NA Offsite - NA	Radiological Hazard Only No direct radiation

Table 2- 10-160B HAZOP Table

Study Node Event No.	Deviation	Causes	Consequences	Existing Safeguards	Actions	Total Rank (Cons., Freq)	Radiological Rank (Cons.,Freq)	Comments
9-12	High Radiation - Direct radiological exposure	Worker inadvertently enters the crane maintenance room while Hot Cell is in operation and opens the shield door	Potential for facility worker exposure (minimal) from Hot Cell	Training and procedures; Facility design (no streaming path).	NAI	NA	NA	Comment: Worker can physically enter Crane Maintenance Room during operation without exposure with Crane Maintenance Room shield door closed, but would typically enter the Crane Maintenance Room during abnormal operations or for routine preventive maintenance (no waste in Hot Cell). No exposure from Hot Cell due to Interlock with crane maintenance shield door on high radiation monitor in Hot Cell.

Table 2- 10-160B HAZOP Table

Study Node Event No.	Deviation	Causes	Consequences	Existing Safeguards	Actions	Total Rank (Cons., Freq)	Radiological Rank (Cons.,Freq)	Comments
9-13	High Radiation - Direct radiological exposure	Human error; Inadvertently opening CUR shield door with waste inside Hot Cell; Permissive circuit accidently left in the on position	Potential for facility worker exposure.	Interlock between the grapple and CUR shield door; Permissive circuit to open shield door; Administrative procedures.	R-6) Add interlock between CUR shield door and shield plug	1,4	Facility Worker - 1,4 Onsite Worker - NA Offsite - NA	
9AC-1	Empty WIPP Canister dropped onto stored waste in the Hot Cell	Human error; Equipment; failure; Grapple failure	Potential for breach of canister and drums; Potential for spread of contamination; Potential for offsite and onsite consequences; Potential for release of hazardous waste; Potential for operational down time.	Training and Procedures; Facility design; Ventilation systems; CAMs; Emergency Response Procedure; Preventive Maintenance Program on crane; Crane/grapple design; Frequent crane inspections; Weight of empty WIPP Canister limits damage to stored waste (1800 lbs.); Inspection that CUR shield door (since shield door can be open if plug is in place); Shield plug in Hot Cell is in place; Shield door crane interlocks mitigate direct radiation exposure and/or spread of contamination.	A-8) Verify weight of empty canister. R-7) Add procedure to verify shield door closed in the CUR during Hot Cell activities.	4,4	Facility Worker - 4,4 Onsite Worker - 4,4 Offsite - 4,4	Note: Empty WIPP Canisters go through CUR. Radiological Hazard Only

Table 2- 10-160B HAZOP Table

Study Node Event No.	Deviation	Causes	Consequences	Existing Safeguards	Actions	Total Rank (Cons., Freq)	Radiological Rank (Cons.,Freq)	Comments
10. Unload Carriage Units in Hot Cell								
10A-1	Puncture drum in the Hot Cell with PAR® manipulator	Human error; Equipment failure	Potential for breach of drum; Potential for spread of contamination; Potential for offsite and onsite consequences; Potential for release of hazardous waste; Potential for operational down time.	Training and Procedures; Facility design; Ventilation systems; CAMs; Emergency Response Procedure; Preventive Maintenance Program on PAR® manipulator equipment and controls; Crane design; Inspection of shield door closed in the CUR; Shield plug in Hot Cell is in place Shield door crane interlocks mitigate direct radiation exposure and/or spread of contamination.	NAI	4,4	Facility Worker - 1,4 Onsite Worker - 4,4 Offsite - 4,4	Radiological Hazard Only
10B-1	While lifting the drum, drum lid comes off in the Hot Cell	Human error; Equipment failure; Drum lid failure	Potential for drum breach (1 drum); Potential for spread of contamination; Potential for loss of production; Potential for onsite and offsite consequences.	Training and procedure; Preventive Maintenance Program on crane; Drum design; Drum inspection; WAC; Ventilation; Shield door closed in the CUR; Shield plug in Hot Cell is in place.	NAI	3,4	Facility Worker - 1,4 Onsite Worker - 3,4 Offsite - 3,4	

Table 2- 10-160B HAZOP Table

Study Node Event No.	Deviation	Causes	Consequences	Existing Safeguards	Actions	Total Rank (Cons., Freq)	Radiological Rank (Cons.,Freq)	Comments
10BF-1	While lifting the drum, drop drum in the Hot Cell	Human error; Equipment failure (sling)	Potential for onsite and offsite consequences; Potential for spread of contamination; Potential for drum breach (drop on top of other drum).	Training and Procedures; Facility design; Ventilation systems; CAMs; Emergency Response Procedure; Preventive Maintenance Program on crane; Crane design; Frequent crane inspections; Shield door closed in the CUR; Shield plug in Hot Cell is in place; Shield door crane interlocks mitigate direct radiation exposure and/or spread of contamination.	NAI	4,4	Facility Worker - 1,4 Onsite Worker - 4,4 Offsite - 4,4	Radiological Hazard Only
10C-1	Higher than expected contamination found on swipe - mishandling by RCT	Human error; Equipment failure (Glovebox leak)	Potential for spread of contamination; Potential for facility worker exposure.	Training and procedure; Glove box design; Inspection of gloves; Preventive Maintenance Program on Glovebox.	NAI	2,4	Facility Worker - 2,4 Onsite Worker - NA Offsite - NA	Radiological Hazard Only
10D-1	Radiation exposure during the process of taking swipes or glove box operations	Glovebox interlock failure	Worker exposure to Hot Cell via glovebox.	Interlocks prevent opening both doors (on Glovebox drawer) at the same time; Glovebox design; Training and procedures; Glovebox not in normal streaming path.	NAI	2,4	Facility Worker - 2,4 Onsite Worker - NA Offsite - NA	Radiological Hazard Only
10D-2	Pinch points in glovebox, hands in glovebox, operator opens the gallery side shield plug	Human error; Maintenance activity	Potential for personnel injury.	Pressure pad (Hot Cell/Glovebox controls) interlock with shield plug; Training and procedures; Preventive Maintenance Program on Glovebox; Configuration of equipment controls.	NAI	1,4	NA	Industrial Hazard Only

Table 2- 10-160B HAZOP Table

Study Node Event No.	Deviation	Causes	Consequences	Existing Safeguards	Actions	Total Rank (Cons., Freq)	Radiological Rank (Cons.,Freq)	Comments
11. Prepare WIPP Canister for Disposal								
11D-1	Fire in the Hot Cell	Heat generated by welding causes ignition of combustibles inside canister	Potential for onsite/offsite consequences; Potential for spread of contamination; Potential for facility damage; Potential for equipment damage.	Robotic welder design; WAC (no flammable material); (i.e.: two mechanical failures to cause accident); Storage limits on waste (LFL); Lid design; WIPP Canister design; Training and procedures; Ventilation; Fire Loading/ Combustible Control Program; Thermal detector; Shield door closed in the CUR; Shield plug in Hot Cell is in place.	NAI	4,4	Facility Worker - 2,4 Onsite Worker - 4,4 Offsite - 4,4	Radiological Hazard Only
11D-2	Explosion in the Hot Cell	Ignition of flammable gases in canister head space during welding activities	Potential for drum breach; Potential for damage to Hot Cell; Potential for loss of shielding to facility worker; Potential for onsite/offsite consequences; Potential for worker fatality; Potential for spread of contamination.	Limited storage time in the Hot Cell; Training and Procedures; Canister lid design; Preventive Maintenance Program on welder; WAC (no flammable material); Vented drums and canister; Ventilation; Shield door closed in the CUR; Shield plug in Hot Cell is in place.	NAI	4,4	Facility Worker - 4,4 Onsite Worker - 4,4 Offsite - 4,4	

Table 2- 10-160B HAZOP Table

Study Node Event No.	Deviation	Causes	Consequences	Existing Safeguards	Actions	Total Rank (Cons., Freq)	Radiological Rank (Cons.,Freq)	Comments
11D-3	Halogenated hydrocarbons accumulate in WIPP Canister head space and welding activity produces phosgene gas (toxic) in the Hot Cell	Chemical reaction to ultraviolet light	Potential onsite exposure to toxic gas.	Ventilation system dilutes; Training and procedures; Canister design; WAC.	A-9) Verify requirements about allowable levels of halogenated hydrocarbons in the drum. A-10) Verify the hazardous chemical inventory in the waste.	3,4	NA	Ventilation flow rate will dilute the gas. Requires further Accident Analysis
11F-1	Loaded WIPP Canister dropped in the Hot Cell	Canister lid failure; Grapple failure; Welding failure; Human error; Shear crane cables	Potential for breach of canister; Potential for breach of drums; Potential for facility damage; Potential for onsite/offsite consequences; Potential for spread of contamination; Potential for facility worker exposure	Grapple design; Preventive Maintenance Program on crane; Training and procedures (welding); Canister design; Lid design; Robotic welder design; Shield door closed in the CUR; Shield plug in Hot Cell is in place.	NAI	4,4	Facility Worker - 1,4 Onsite Worker - 4,4 Offsite - 4,4	Radiological Hazard Only
12. WIPP Canister Transfer to Shuttle Car in Transfer Cell								
12D-1	Loaded WIPP Canister dropped in the Hot Cell	Same as event 11F-1			NAI			

Table 2- 10-160B HAZOP Table

Study Node Event No.	Deviation	Causes	Consequences	Existing Safeguards	Actions	Total Rank (Cons., Freq)	Radiological Rank (Cons.,Freq)	Comments
12E-1	Drop the loaded WIPP Canister into the Transfer Cell	Equipment failure; Human error; Lid failure; Welding failure	Potential for breach of canister and drums; Potential to spread contamination; Potential for offsite/onsite consequences; Potential for facility damage; Potential for shuttle car damage; Potential to shut down RH operations.	Guide tubes; Training and Procedures; Preventive Maintenance Program on crane; Design of shuttle car (designed to shear away and absorb impact); Impact limiters on the floor; Design of lid.	NAI	4,4	Facility Worker - 4,4 Onsite Worker - 4,4 Offsite - 4,4	Radiological Hazard Only
12E-2	Hot Cell shield valve inadvertently closes on WIPP Canister and shears the canister	Mechanical-electrical failure or control system failure	Potential for breach of drums; Potential to spread contamination; Potential for offsite/onsite consequences; Potential for facility damage; Potential to shut down RH operations.	Crane and Hot Cell shield valve interlock; Torque limiter on shield valve motor; Preventive Maintenance Program on shield valve and controls; Design of canister.	A-11) Check design of WIPP canister.	4,4	Facility Worker - 4,4 Onsite Worker - 4,4 Offsite - 4,4	Radiological Hazard Only

Table 2- 10-160B HAZOP Table

Study Node Event No.	Deviation	Causes	Consequences	Existing Safeguards	Actions	Total Rank (Cons., Freq)	Radiological Rank (Cons.,Freq)	Comments
12E-3	Inadvertent movement of crane (east/west) while lowering WIPP Canister into Transfer Cell	Mechanical-electrical failure or control system failure; Human error	Potential for breach of drums; Potential to spread contamination; Potential for offsite/onsite consequences; Potential for facility damage; Potential for shuttle car damage; Potential to shut down RH operations.	Crane and shield valve interlock; Torque limiter on shield valve motor; Preventive Maintenance Program on crane; Design of canister; Emergency stop in crane.	NAI	4,4	Facility Worker - 4,4 Onsite Worker - 4,4 Offsite - 4,4	Radiological Hazard Only
12E-4	Inadvertent movement of the shuttle car with the WIPP Canister partially lowered	Mechanical-electrical failure or control system failure (shuttle car failure); Human error; Interlock failure (shuttle car is interlocked with shield valve).	Potential for breach of drums; Potential to spread contamination; Potential for offsite/onsite consequences; Potential for facility damage; Potential for shuttle car damage; Potential to shut down RH operations.	Variable speed drive motor controller (limits motor current and stops motor when shuttle is obstructed); Preventive Maintenance Program on shield valve/shuttle car interlock; Canister design; Drive train on shuttle car - belts will slip; Interlock between shuttle car and shield valve.	NAI	4,4	Facility Worker - 4,4 Onsite Worker - 4,4 Offsite - 4,4	Radiological Hazard Only

Table 2- 10-160B HAZOP Table

Study Node Event No.	Deviation	Causes	Consequences	Existing Safeguards	Actions	Total Rank (Cons., Freq)	Radiological Rank (Cons.,Freq)	Comments
13. Move WIPP Canister into Position in the Transfer Cell								
13ABCD-1	WIPP Canister moved into position in the Transfer Cell	Same as events 5-3 through 5-6 - 6-1, 6-2, and 6-5 in DOE/WIPP-00-2305						
14. Load WIPP Canister into Facility Cask in the Transfer Cell								
14ACDEFG HI-1	Load WIPP Canister into facility cask in Transfer Cell	Same as events 7-1 through 7-13 in DOE/WIPP-00-2305			NAI			
14B-1	Robotic arm damages WIPP Canister during contamination survey	Equipment failure (Robotic control failure)	Potential for breach of drums; Potential to spread contamination; Potential for offsite/onsite consequences; Potential for facility damage; Potential for shuttle car damage; Potential to shut down RH operations; Potential damage to Robotic arm.	Robot design (device is not strong enough to penetrate the canister); Collision detector; Force limiter on swipe arm.	NAI	4,4	Facility Worker - 4,4 Onsite Worker - 4,4 Offsite - 4,4	

Table 2- 10-160B HAZOP Table

Study Node Event No.	Deviation	Causes	Consequences	Existing Safeguards	Actions	Total Rank (Cons., Freq)	Radiological Rank (Cons.,Freq)	Comments
15. Facility Cask Loaded onto Hoist								
15ABC-1	Facility cask to Hoist	Same as events 8-1 through 8-7 in DOE/WIPP-00-2305			NAI			
16. Facility Cask Transfer to Disposal Room								
16ABCD-1	Facility cask to H.E.R.E.	Same as events 9-1 through 9-8 in DOE/WIPP-00-2305			NAI			
17. Cask Emplacement in Bore Hole								
17ABCD-1	H.E.R.E. to Emplacement	Same as events 10-1 through 10-7 in DOE/WIPP-00-2305			NAI			
18. CH/RH Interface (covered by DOE/WIPP-00-2305)								

Table 2- 10-160B HAZOP Table

Study Node Event No.	Deviation	Causes	Consequences	Existing Safeguards	Actions	Total Rank (Cons., Freq)	Radiological Rank (Cons.,Freq)	Comments
19. Storage Mode (covered by DOE/WIPP-00-2305)								
20. Natural Events								
20-1	Loss of confinement in RH Bay due to seismic event (lid is loose on cask)	Seismic event	Potential for major disruption of facility operations; Potential damage to cask and/or canister; Potential breach of drums due to loose cask lid in RH Bay; Potential for loss of site utilities; Potential to release radioactive material; Potential for fire; Potential for explosion; Potential for worker injury or fatality; Potential for breach of drums; Potential for onsite/offsite consequences; Potential for facility worker exposure.	Waste Handling Building is DBE qualified; Crane is DBE qualified; Emergency Response Plan; Recovery Plan; 10-160B Cask design - meets DOT Type B shipping container certification requirements; HVAC system shutdown switch; Hot Cell is DBE qualified.	A-12) Verify the Mezzanine design is DBE qualified.	4,3	Facility Worker - 4,3 Onsite Worker - 4,3 Offsite - 4,3	Worker injury or fatality could occur as the result of the earthquake alone. Radiological impact would likely be extensive.
20-2	Full facility fire	Seismic	Potential for breach of drums; Potential for onsite/offsite consequences; Potential for facility worker exposure.	Waste Handling Building DBE qualified; Crane is DBE qualified; PAR® is DBE qualified; Hot Cell is DBE qualified.	NAI	4,3	Facility Worker - 4,3 Onsite Worker - 4,3 Offsite - 4,3	

Table 2- 10-160B HAZOP Table

Study Node Event No.	Deviation	Causes	Consequences	Existing Safeguards	Actions	Total Rank (Cons., Freq)	Radiological Rank (Cons.,Freq)	Comments
20-3	Loss of confinement due to Tornado.	Tornado	Potential for breach of drums due to loose cask lid in RH Bay ; Potential for onsite/offsite consequences; Potential for facility worker exposure; Potential for disruption of processing operations; Potential to lose site utilities; Potential for worker injury or fatality; Potential for fire; Potential for explosion; Potential for breach of drums in Hot Cell.	Waste Handling Building DBE and DBT qualified; Emergency Response Procedures; Recovery Plan; Weather monitored by CMR (Central Monitoring Room); 10-160B Cask design - meets DOT Type B shipping container certification requirements; Hot Cell is DBT qualified.	A-13) Verify shield door is DBT qualified.	4,2	Facility Worker - 4,2 Onsite Worker - 4,2 Offsite - 4,2	Worker injury or fatality could occur as the result of the tornado.
20-4	Range Fire	Lightning; unknown ignition source Gas pipeline explosion	Potential to disrupt site operations; Potential for smoke to enter the mine shaft; Potential for underground evacuation; Potential for smoke to enter facility buildings; Potential for facility damage	Emergency Response Procedures; Fire break installed; Fire fighting capability; Emergency response team; Fire fighting training; 24 hour fire brigade	NAI	2,4	NA	Industrial accident only. Potential for a range fire having a direct impact on the WHB such that a radiological release would occur is minimal

Table 2- 10-160B HAZOP Table

Study Node Event No.	Deviation	Causes	Consequences	Existing Safeguards	Actions	Total Rank (Cons., Freq)	Radiological Rank (Cons.,Freq)	Comments
20-5	Cold Weather Natural Ventilation Pressure results in changes to air balance (Underground ventilation system)	Cold weather caused Natural Ventilation Pressure (NVP)	Potential to disrupt waste handling operations; Potential to, in the event of an accident involving release of radiological material, spread airborne contamination to the environment; Potential to cause deterioration of braking and electronic systems for the waste shaft hoist during prolonged exposure to salt; Potential for waste shaft hoist to fail; Potential for worker injury	Operator training and qualification; Waste shaft hoist system design; Operating procedures; Air balance and flow tests; Shaft pressure monitoring; Alarms to indicate adverse air pressure conditions; WIPP ventilation simulator used for guidance; Underground ventilation remote monitoring control system (monitors air flows and d/p's and enable CMR operator to adjust vortex to control flow) Mine weather stations to monitor natural ventilation pressure(temp, relative humidity and barometric pressure); Isolation of mine splits; Backup power available to operate fans for flow through the panel area	NAI	3,4	NA	There would be no radiological hazard as the result of the cold weather NVP event unless there was already contamination present in the mine. Injury to worker related to industrial mining safety.

Table 2- 10-160B HAZOP Table

Study Node Event No.	Deviation	Causes	Consequences	Existing Safeguards	Actions	Total Rank (Cons., Freq)	Radiological Rank (Cons.,Freq)	Comments
20-6	Hot Weather Natural Ventilation Pressure results in changes to air balance (Underground ventilation system)	Hot weather caused Natural Ventilation Pressure (NVP)	Potential to disrupt waste handling operations; Potential to, in the event of an accident involving release of radiological material, spread airborne contamination to the environment; Potential to cause deterioration of braking and electronic systems for the waste shaft hoist during prolonged exposure to salt Potential for waste shaft hoist to fail; Potential for worker injury	Operator training and qualification; Waste shaft hoist system design; Preventative maintenance procedures; Air balance and flow tests; Monitoring at bulkhead 309; Bulkhead 309 design to pressurize the chamber between the walls of the 309 bulkhead using fans; Procedures to maintain differential pressures in the mine; WIPP ventilation simulator used for guidance; Underground ventilation remote monitoring control system (monitors air flows and d/p's and enables CMR operator to adjust vortex to control flow) Mine weather stations to monitor natural ventilation pressure(temp, relative humidity and barometric pressure); Isolation of mine splits; Backup power available to operate fans for flow through the panel area; Alarms to indicate adverse air pressure conditions	NAI	3,4	NA	There would be no radiological hazard as the result of the hot weather NVP event unless there was already contamination present in the mine. Injury to worker related to industrial mining safety.

Table 2- 10-160B HAZOP Table

Study Node Event No.	Deviation	Causes	Consequences	Existing Safeguards	Actions	Total Rank (Cons., Freq)	Radiological Rank (Cons.,Freq)	Comments
21. Common Events								
21-1	Loss of Facility ventilation	Human error- Improper bulkhead alignment Equipment failure -Failure of exhaust fans; Loss of electrical power; Loss of compressed air	Potential to shutdown operations	Worker training; Ventilation system operating procedures; Preventive Maintenance Program for ventilation system equipment; Redundant Exhaust fans; Evacuation plan; Backup diesel generators; Redundant air compressors	NAI	NA	NA	No release of radiological materials
21-2	Loss of power	NPH - Earthquake, tornado, lightning, high winds, etc.; Vehicle impact; Power from commercial supplier is lost	Potential loss of filtered ventilation; Potential loss of hoist	Backup diesel generators; Redundant power feeds; Response procedures; Worker training; Fail-safe design of cranes, hoist.	NAI	NA	NA	No release of radiological materials

Table 2- 10-160B HAZOP Table

Study Node Event No.	Deviation	Causes	Consequences	Existing Safeguards	Actions	Total Rank (Cons., Freq)	Radiological Rank (Cons.,Freq)	Comments
21-3	Loss of Fire Protection (includes detection and suppression)	NPH; Loss of 180,000 gallon fire water storage tanks	Potential inability to detect and suppress fires	Design and construction of fire suppression system; Two on-site fire water storage tanks containing 180,000 gallons (One storage tank capacity sufficient for DBF); Two fire pumps, one electrical and one diesel, available; On-site fire truck and fire fighting equipment All fire related systems, training, inspection, and testing are in accordance to NFPA (National Fire Protection Association) and NEC regulations Inspections and functional tests of system performed on a periodic basis 24 hour battery backup for fire detection system available in WHB; 24 hour fire brigade	NAI	NA	NA	Ranking would be significant only if there were a fire event and the detection and suppression systems were inoperative. Otherwise, loss of the detection and suppression systems has no impact.
21-4	Loss of Plant Air	NPH; Loss of power; Mechanical failure	Unable to open/close CUR shield door; Facility down time.	Interlock between CUR shield door and grapple prevents movement of waste while shield door is open.	NAI	NA	NA	Shield door fails as is during a loss of plant air. If shield door is open upon loss of plant air, waste can not be moved with the grapple due to the interlock. No hazardous condition exists, therefore, on a loss of plant air.

Table 2- 10-160B HAZOP Table

Study Node Event No.	Deviation	Causes	Consequences	Existing Safeguards	Actions	Total Rank (Cons., Freq)	Radiological Rank (Cons.,Freq)	Comments
21-5	Loss of Facility heating causes loss of shielding via Hot Cell windows	Loss of power; Mechanical failure	Potential for facility worker exposure.	Preventive Maintenance Program on Facility heating; Redundant ventilation trains (design); 10-stage sequence heater; Emergency management loss of power; Drums on floor stacked 1-high are below streaming path; Training and procedures.	NAI	2,4	Facility Worker - 2,4 Onsite Worker - NA Offsite - NA	Note: Below 50 degrees for months (extended period of time). Loss of cooling is not a problem - temperature will not go below 50 degrees due to heat sink of the building.
22. External Events								
22-1	Aircraft Crashes Into WHB	Personnel error; Equipment failure	Potential for major damage to WHB; Potential for fire; Potential for worker injury or fatality; Potential for major release of radioactive material; Potential for considerable radiological exposure to personnel	Physical location of site is remote; Air space above facility is not part of normal flight patterns; Physical size of WHB	NAI	4,1	Facility Worker - 4,1 Onsite Worker - 4,1 Offsite - 4,1	This event would have major radiological and non-radiological impact. However, the event is beyond extremely unlikely and does not require accident analysis. Worker injury or fatality could result from this industrial accident

Study Node Event No.	Deviation	Causes	Consequences	Existing Safeguards	Actions	Total Rank (Cons., Freq)	Radiological Rank (Cons.,Freq)	Comments
22-2	Gas Pipeline Explosion	Loss of pipe integrity, spark Natural gas explosion; Range Fire	Potential for fire; Potential for off-site personnel injury or fatality; Potential environmental concern; Potential to stop site operations	WHB is located one mile from nearest pipeline. Damage radius from recent explosions is a few hundred feet	NAI	2,4	NA	Risk associated with this event is similar to that of the general public, furthermore the nearest gas pipeline is approximately one (1) mile from site boundary.
22-3	Vehicle crash from CH to the RH Bay (Forklift crashes through the roll up door)	Human error; Mechanical failure	Potential to lose DP between RH Bay and CH Bay; Potential for facility damage; Potential for personnel injury (see WIPP SAR).	Training and procedures; Preventive Maintenance Program on CH/RH vehicles; Design of forklift (dead man switch); Design of lid; Design of cask.	NAI	4,4	NA	Industrial Hazard Only

This page intentionally left blank

Appendix D

Determination of Frequencies for Selected Accidents

Table D-1, Documentation of Basic Event Variables Used in the quantification of RH Waste Accident Frequencies

ID	Description	Value	Units	Source/Comments
f_fueltank leak	Frequency of leaks in an unpressurized fuel tank	1.00E-07	/op.hr	Ref. WSRC-TR-93-262, Table 1b. The value in Table 1b is based on a generic tank. The tanks on the forklift are more reliable because they conform to MSA requirements.
f_forklift_drop_site	Frequency of forklift equipment failures producing waste canister drops, considering all the forklift operations accomplished during a typical operational year at a typical operational DOE site	4.30E-03	/site-year	Ref. INEL-94/0228. Table B-1, p. B-10. Estimate based on very broad arguments on a site wide basis.
f_forklift_coll_site	Frequency of forklift equipment failures producing punctures, considering all the forklift operations accomplished during a typical operational year at a typical operational DOE site	1.30E-02	/site	Ref. INEL-94-0228, Table B-1, p. B-10. Estimate based on very broad arguments on a site wide basis. This value forms the basis for frequency of forklift collisions per operating hour, f_forklift_coll.
f_hoist_brake	Failure of hoist braking system, given loss of power to hoist lifting equipment.	1.30E-07	/demand	Ref. WIPP/WID-96-2178. Waste Hoist Brake system Analysis. Average unavailability of brake system based on anticipated annual usage, (see p. A3-18 of report for top event unavailability definition)
f_LOSP	Frequency of loss of offsite power from the STS	2.20E-01	/yr.	Ref. DOE/WIPP-95-2065, Rev.2 Table D-12. Based on 3 events at WIPP in 13.8 years.
f_Loss_onsite_pwr	Frequency of loss of distribution of power onsite to critical lifting equipment	2.20E-01	/yr.	Ref. DOE/WIPP-95-2065, Rev.2 Table D-12. Based on 3 events at WIPP in 13.8 years.
H_filter_UG1	HEP for filter to transfer to underground filtration mode, given a release of TRU waste in the underground during active emplacement of waste. Approximately 2 minutes available to act before material transits from U/G to the surface.	1.00E-01	/demand	Ref. WSRC-TR-93-581, Action 2. Estimate for failure to take immediate action. A potential release is considered a compelling signal to act. High mean value selected, because of the potential for injuries compete for attention and limited time.
H_forklift_drop	HEP for failure to control a forklift during a waste handling operations, resulting in a drop	1.00E-05	/operation	Ref. WSRC-TR-93-581. Action 25. Low value used because the forklift is used in a consistent and repetitious manner for waste transfers, and favorable working conditions must exist for waste handling operations to proceed. A spotter is also present.

Table D-1, Documentation of Basic Event Variables Used in the quantification of RH Waste Accident Frequencies

ID	Description	Value	Units	Source/Comments
H_forklift_punct	Collision due to human error	5.00E-06	/op	Ref. WSRC-TR-93-581, Action 26. Low value is used because the forklift is used in a consistent and repetitious manner for waste transfers. The forklift transfer in the underground is a standard operation done under excellent working conditions and a spotter is present. Floor will be leveled prior to storage operations in a panel room.
L_canister_bre	Likelihood that a waste canister is breached given that it falls from < 22 ft.	6.20E-01	/event	Ref. PLG-1121. This scenario considers a stacked 7-pack of CH waste drums. The RH waste canister is similar to SWB for CH waste. According to PLG-1121, no loss of content was apparent when two SWB's were dropped from 25 ft.
L_canister_fire	Likelihood that a waste canister is breached, given a fire adjacent to the waste canister	4.00E-02		Ref. DOE/WIPP-87-005, Likelihood of thermal breach, sum of items (22) through (25), increased by a factor of 10 to account for more energetic external fire. The increase is judged to be conservatively reasonable, since fuel fires initiated by collisions could be more energetic than a waste drum fire.
L_filter_UG1	Likelihood of failure to auto-transfer to underground filtration mode, given a gradual release of TRU waste in the underground	1.00E+00	/demand	Worst case assumption. No credit taken for the ability of the time integrated control logic to prevent a puff release.
L_filter_WHB	Likelihood the on-line HEPA filter is open or bypassed, given a release of TRU waste in the WHB, and is therefore unavailable to accomplish its function. (Primary cause is human error that leaves the HEPA filter in an undetected bypassed condition)	1.00E-04	/event	This condition requires alignment error at the filter and lack of monitoring by the CMRO. Given the HEPA filter is required to be on-line and the delta-p across the HEPA filter is monitored in the CMR, the estimate is judged to be conservative.
L_fire_punct	Likelihood that a fire is ignited, given forklift collision or leak during waste handling operations in the underground	5.00E-04		Ref. DOT, Traffic Safety Facts 1997, Table 38, shows <0.05% vehicles involved in fire for all crashes of "Bus" vehicles.
N_wc_yr	Bounding number of RH waste hoist or forklift (in UG) transfers per year	6.93E+02	/yr.	Based on current estimated throughput. Assumes one hoist transfer and one forklift operation per waste canister
T_forklift_op	Average time that a forklift requires to transfer one waste canister to the emplacement equipment in UG	4.00E+00	hours	Based on current training activities, operations personnel estimate that the time to transfer one waste canister to the emplacement equipment is approximately 30 minutes.
T_hoist_UG	Duration of time that the hoist supports waste during one transfer to the underground (hours)	2.00E-01	hours	Ref. WIPP/WID-96-2178,P.3-3. Estimates 8.6 min. cycle time per lift at 500 ft/min. Time rounded to 0.2 hours to account for any additional brake release time that might be required

Table D-1, Documentation of Basic Event Variables Used in the quantification of RH Waste Accident Frequencies

ID	Description	Value	Units	Source/Comments
FIgnition(ES)	The probability of an electrical short igniting a fire in the Hot Cell in one year	5.00E-04	/yr.	Per WSRC-TR-93-26234, the failure of a circuit breaker or fuse is 5.0E-04/demand. If it is conservatively assumed that an electrical short in the equipment in the Hot Cell is present with waste stored in the Hot Cell, then the probability of a fire initiated by an electrical short can be approximated as the demand failure of the circuit breaker or fuse.
FComb	The probability of having sufficient combustibles to generate a large enough fire to ignite the waste material in a drum	1.00E-04		The probability of having sufficient combustible material in the Hot Cell to generate a large enough fire to ignite the waste material in a drum can be equated to a human error in failing to properly follow procedures. For this case, it is assumed that the failure to properly meet the combustible control program requirements would involve an error to accomplish a clear, unambiguous task and the failure of a checker (not independent in time) to detect the error. Per DOE/WIPP-95-2065, Rev 4
L_oxidant	The probability that there is sufficient oxidant in a waste drum to support a sustained fire	4.20E-03		Per DOE/WIPP-95-2065, Rev 4
NDrums	Bounding number of waste drums handled in one year	2.08E+03	op/yr.	Based on current estimated throughput.
F Exp Mix	Probability of explosive gas mixture in drum	1.00E-04		The probability of having an explosive gas mixture in a waste drum can be equated to a human error in failing to properly follow procedures in the preparation of the drum for shipment to WIPP. Per DOE/WIPP-95-2065, Rev 4
F Exp Mix Can	Probability of explosive gas mixture in drum in WIPP Canister	3.00E-04		Since there are three waste drums in each facility canister at the time the canister lid is welded, the probability that there is a waste drum with an explosive gas mixture in the canister at the time of welding is 3 times The probability of having an explosive gas mixture in a waste drum.
F Ignition (Weld)	The probability of generating a spark that ignites the flammable gas in a waste drum during welding	0.00E+00	/event	Welder removed from service- no welding performed in Hot Cell
NCanisters	The total number of canisters handled per year	6.93E+02	op/yr.	Since there are three waste drums per canister, the total number of canisters handled per year is 2080/3 or 693 canisters
FDrop	The probability of a crane drop per lift	3.40E-06		Due to all mechanisms (i. e., equipment failure and human error). Per DOE/WIPP-95-2065, Rev 4
NCask	The maximum number of 10-160B casks that will be process in one year.	2.08E+02	op/yr.	Based on current estimated throughput.
NCarriage	Number of drum carriages lifted per year	4.16E+02	op/yr.	There are two drum carriages in each 10-160B road cask. Therefore, if 208 10-160B casks are processed each year, 416 drum carriages will be lifted

Table D-1, Documentation of Basic Event Variables Used in the quantification of RH Waste Accident Frequencies

ID	Description	Value	Units	Source/Comments
FCrane Strike	The probability of striking a stationary object with a remotely operated crane	3.00E-03		From WSCR-TR-93-58133: This probability is assumed to apply in this case by assuming that the human error failure rate dominates the equipment (hardware) failure rate that could result in the crane striking the lifting fixture.
FDrum Plac	The probability that a waste drum is mis-positioned and left in a location where it can be struck by the falling shield plug lift fixture	1.00E-04		This event is modeled as a human error for failure to properly follow procedures and the failure of the checker. Per DOE/WIPP-95-2065, Rev 4
FDrum Fail	The probability that a drum is failed by a drop in the Hot Cell	3.00E-01		Per DOE/WIPP-95-2065, Rev 4, the probability that one drum in a seven pack that is dropped ten feet fails is given as 0.62. However, this probability includes the crushing effect of the other drums in the package. Since in this case a single drum is dropped, the probability of failure would be lower and is assumed to be 0.3, half the probability from the given reference.
FStrike	The frequency of striking the drum the the PAR manipulator arm.	1.00E-03		This event is equivalent to the failure to follow a clear, unambiguous procedure.
FClosing	The probability of a shield valve closing on the canister.	2.00E-13		Per PLG 1317.
FDrum Rupture	The probability of rupturing the canister.	2.00E-03		EANL/EAD/TM-29 provides estimates of the conditional probability of rupture of a waste drum due to impact during waste handling operations. Since the WIPP Canister is more robust than a waste drum, it is expected that it would be less likely to suffer rupture from an impact than a waste drum would.
FCrane	The probability of suprious movement of the crane	1.00E-03		The spurious movement of the crane during transfer of the WIPP Canister could be the result of either human error or equipment failure. However, EEG 74 indicates that 90 to 95% of all crane incidents are caused by operator error. Therefore, for this analysis it is assumed that the spurious movement of the crane is due to an operator error.
FShutt Car Mov	The probability of suprious movement of the Shuttle Car	3.30E-12		PLG-1317, Waste Isolation Pilot Plant 6.25 Grapple Hoist Fault Tree Analysis
FGas Btl Moved	The probability of a gas bottle movement (operator error) with a 10-160B cask is in the RH Bay	1.00E-04		Per DOE/WIPP-95-2065, Rev 4, this can be equated to the probability of a human errer in failing to properly follow procedures and the failure of a checker (not independent in time) to detect the error.
FCask Hit	The probability of the random direction of the gas bottle missile hitting the cask head.	1.40E-02		Per DOE/WIPP-95-2065, Rev 4
FMissile	The frequency for a gas bottle to fall and become a missile	2.00E-02		It is conservatively assumed that this sequence of events has a conditional probability. Because of the round shape and robustness of the Type B Shipping Cask, the missile must make a head-on strike of the cask.
F Ignition (OE)	The probability of generating a spark that ignites the flammable gas in a waste drum	1.00E-03	/event	Per DOE/WIPP-95-2065, Rev 4, this can be equated to the probability of a human errer in failing to properly follow procedures.

Table D-2, RH3 - Loss of Confinement in the Waste Handling Building

Variable Name	Description	Formula	Resulting value	Comments
RH3_IE	Frequency of Grapple Hoist Drops resulting in a breach of the canister per year	F_hoist _drop * N_wc_yr	9.01E-07	Grapple hoist drops canister back into Transfer Cell
N_wc_yr	Bounding number of RH waste canisters transferred by grapple hoist into the facility cask	N_wc_yr	6.93E+02	Based on current estimated throughput.
F_hoist_drop	Frequency of grapple hoist drop resulting in a breach of the canister per demand	F_hoist _drop	1.30E-09	Ref. PLG-1317, Waste Isolation Pilot Plant 6.25 Grapple Hoist Fault Tree Analysis

Figure D-1, Event Tree for RH3 - Loss of Confinement in the WHB

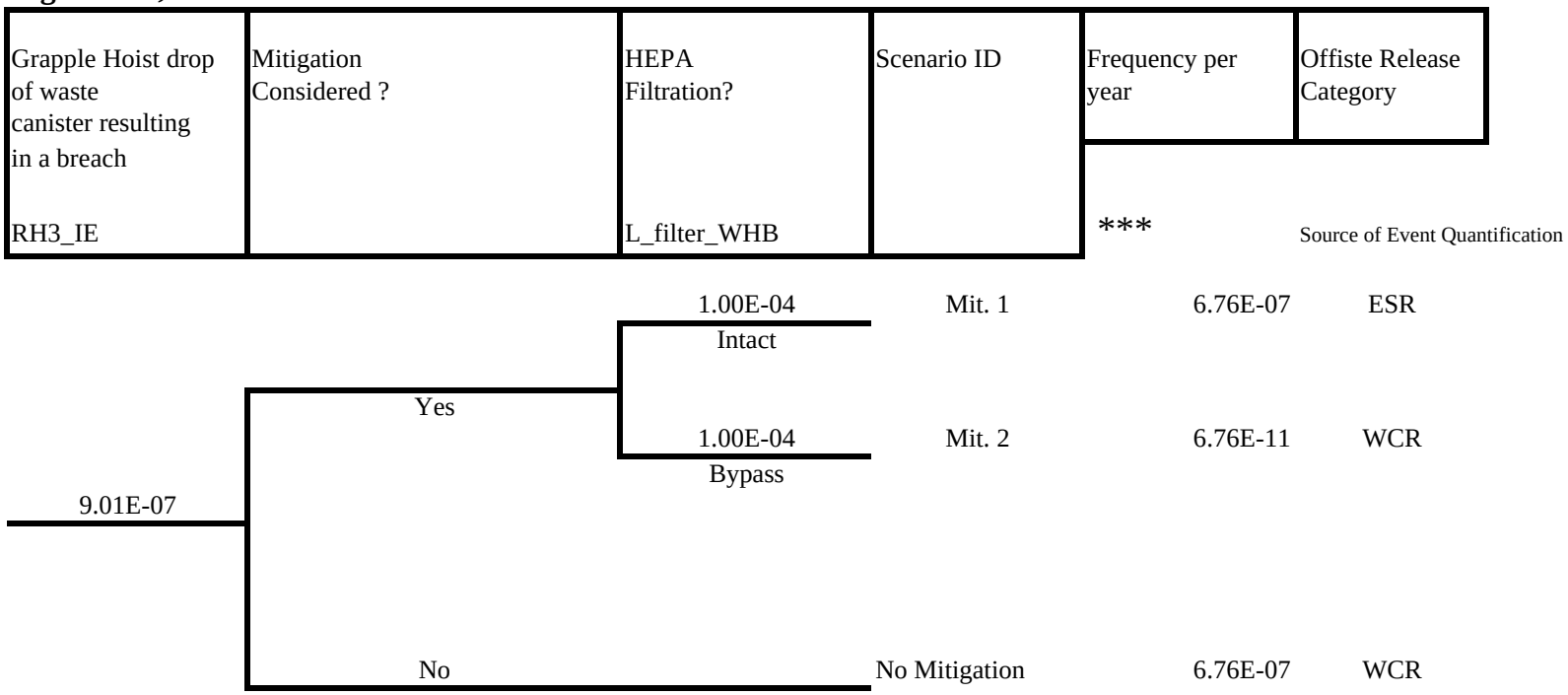

LEGEND:

NR:	**No Release**
ESR:	**Extremely Small Release**
SR:	**Small Release**
WCR:	**Worst Case Release**

Table D-3, Initiator for Event 8-6 in RH4A - Loss of Power to Hoist While Waste is being Transferred to the Underground

Variable Name	Description	Formula	Resulting value	Comments
RH4A_IE	Frequency of loss of power to hoist while transferring waste to the underground	f_Loss _pwr_hoist *T_hoist_yr	6.96E-03	Constitutes dominant demand for brake system to function without backup.
f_loss_pwr_hoist		f_LOSP + f_Loss_onsite_pwr	4.40E-01	Power lost due to either the loss of the source or the loss of distribution. Onsite power sources will not come on line quickly enough to prevent a requirement for the hoist brake system to function upon loss of power
f_LOSP	Frequency of loss of offsite power from the STS	f_LOSP	2.20E-01	Ref.DOE/WIPP-95-2065,Rev.2, Table D-12. Based on 3 events at WIPP in 13.8 years.
f_Loss_onsite_pwr	Frequency of loss of distribution of power onsite to critical lifting equipment	f_Loss_onsite_pwr	2.20E-01	Ref.DOE/WIPP-95-2065,Rev.2, Table D-12. Based on 3 events at WIPP in 13.8 years.
N_wc_yr	Bounding number of RH waste hoist transfers per year	N_wc_yr	6.93E+02	Based on current estimated throughput.
T_hoist_yr	Time that hoist supports waste over a year of operation	N_wc_yr * T_hoist_op	1.39E+02	Total exposure time of the hoist to events that could require brakes to function to prevent a waste drop.
T_hoist_op	Duration of time that the hoist supports waste during one transfer to the underground (hours)	T_hoist_op	2.00E-01	Ref. WIPP/WID-96-2178, P 3-3. Estimates 8.6 min. cycle timer per lift at 500 ft/min. Time rounded to 0.2 hours to account for any additional brake release time that might be required.

Figure D-2, Event Tree for RH4A - Loss of Confinement in the UG - Waste Hoist Failure

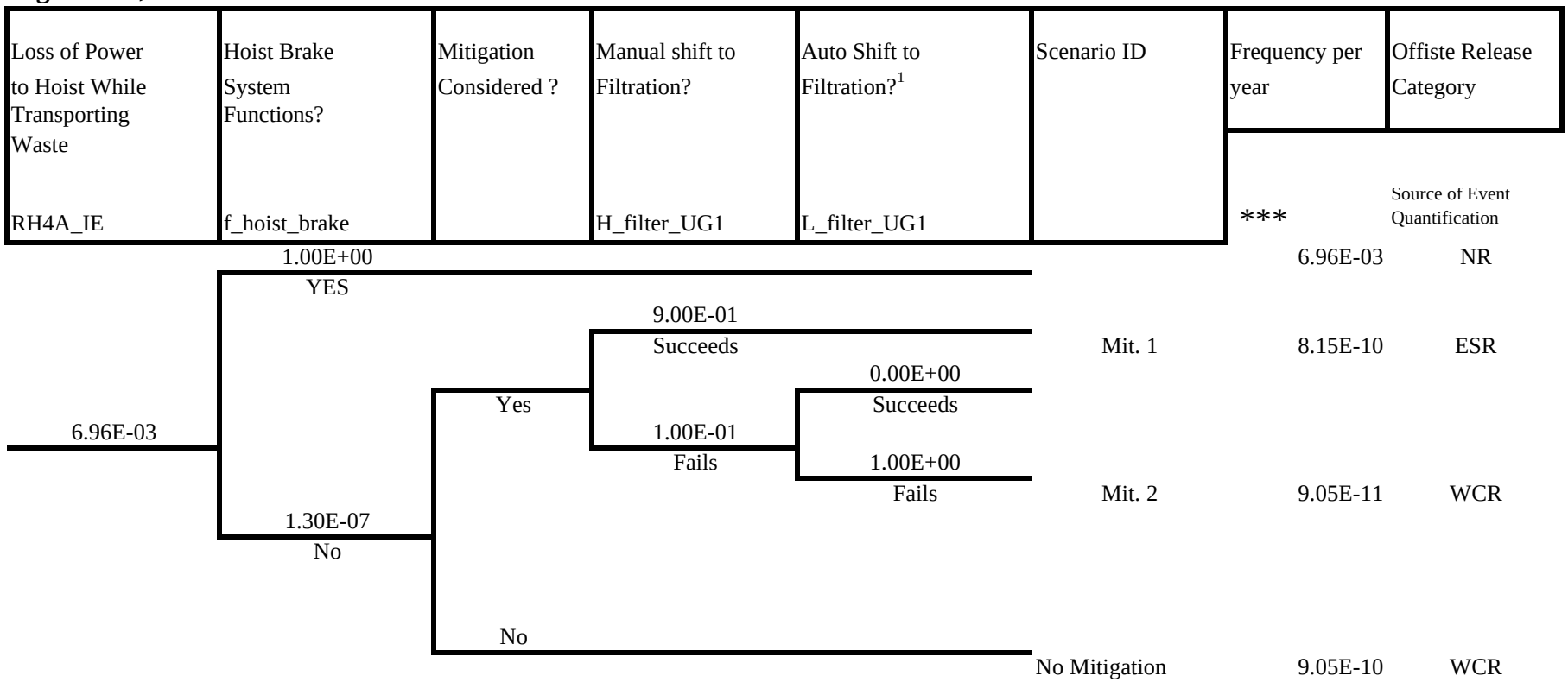

LEGEND:

NR:	**No Release**
ESR:	**Extremely Small Release**
SR:	**Small Release**
WCR:	**Worst Case Release**

[1]No credit taken for Auto Shift to Filtration

Table D-4, RH4-B - Loss of Confinement in the Underground

Variable Name	Description	Formula	Resulting val	Comments
RH4B_IE	Drop of waste canister in the underground	N_wc_yr * f_wc_UG	9.31E-03	Frequency on an annual basis is the product of the number of operations in which a breach could occur and the accident rate per operation.
f_wc_UG	Frequency of waste canister drops from forklift during waste handling operations in the UG horizon	H_forklift_drop + f_hardware	1.34E-05	Drop may occur due to either human error or hardware failure.
H_forklift_drop	Drop due to human error	H_forklift_drop	1.0E-05/op	The forklift transfer in the underground is a standard operation done under excellent working conditions. Floor will be leveled prior to storage operations in a panel room. A spotter is also present. See Table D-1 for variable documentation.
f_hardware	Drop due to forklift hardware failure	f_forklift_drop * T_forklift_UG	3.44E-06	Forklift hardware failures result from time related mechanisms during operation, but only produce drops during the time period when the forklift is handling waste.
N_wc_yr	Bounding number of RH waste forklift operations per year	N_wc_yr	6.93E+02	Based on current estimated throughput. Assumes one forklift operation per waste canister.
f_forklift_drop	Frequency of forklift hardware failures (lifting mechanism, suspension, structure) resulting in drops of waste canister during waste handlingoperations	f_forklift_drop_site /(10 forklifts * 2000 op.hours * 0.25 usage factor for forklift)	8.60E-07	Scoping estimate based on estimate of a typical site year. At WIPP pre-operational checks are accomplished before each shift.
f_forklift_drop_site	Frequency of forklift equipment failures producing waste canister drops, considering all the forklift year at a typical operational DOE site operations accomplished during a typical operational	f_forklift_drop_site	4.3E-03/site yr	Ref. INEL-94/0228, Table B-1, p. B-10. Estimate based on very broad arguments on a site wide basis.
T_forklift_UG	Average time that a forklift requires to transfer one waste canister to the emplacement equipment in UG	T_forklift_UG	4.0 hr	Based on current training activities, operations personnel estimate that the time to transfer one waste canister to the emplacement equipment is approximately 30 minutes.

Figure D-3, Event Tree for RH4B - Loss of Confinement in the UG - Forklift

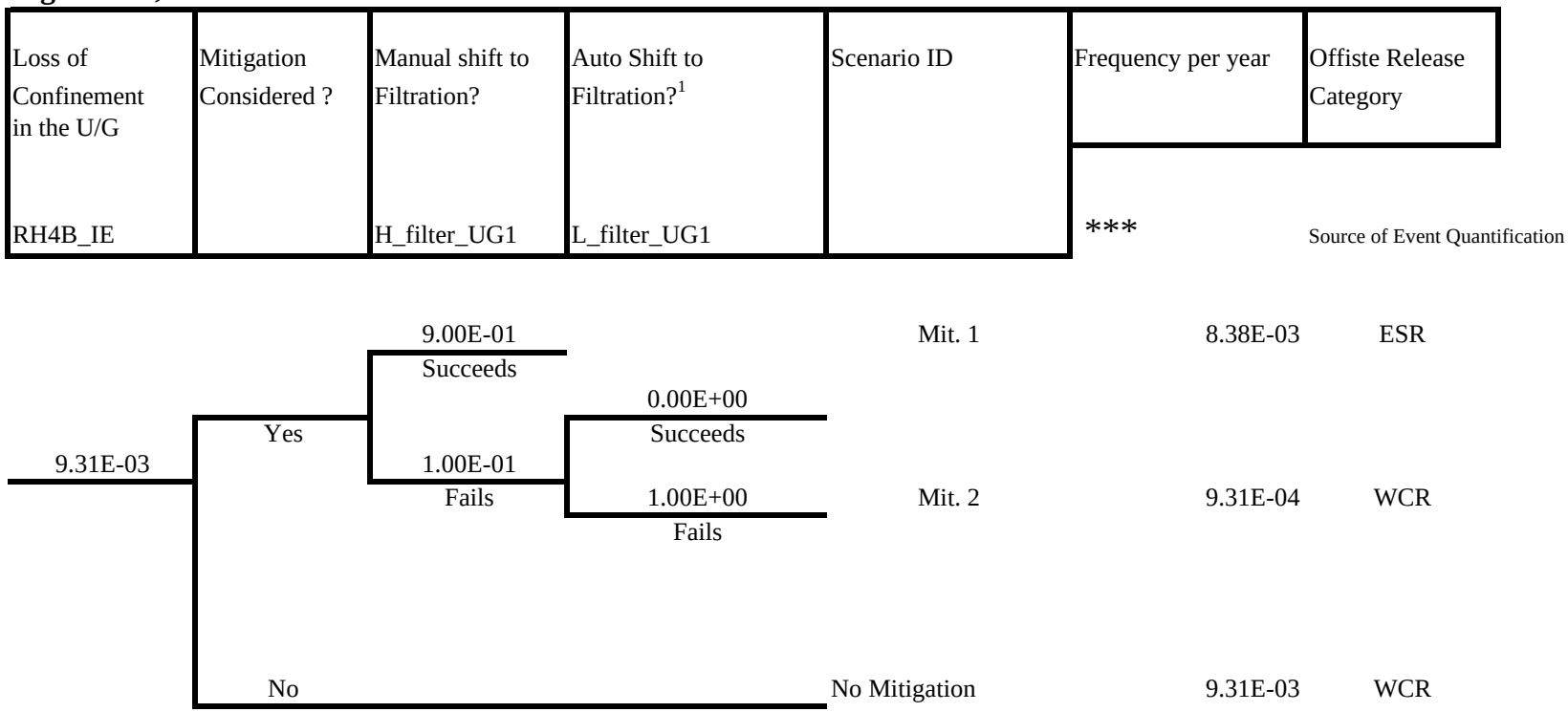

LEGEND:

NR:	**No Release**
ESR:	**Extremely Small Release**
SR:	**Small Release**
WCR:	**Worst Case Release**

[1]No credit taken for Auto Shift to Filtration

Table D-5 - RH6 Seismic Event

This section develops the scenario initiating event probability assuming that the preventative and mitigative measures function as designed during the accident scenario.

As discussed in (1) in the existing WIPP CH SAR, DOE/WIPP-95-2065, Rev.2, (2) the Project Technical Baseline for Regulatory Compliance WP 02-RC1, and (3) Final Environmental Impact Statement DOE/EIS-0026, UC-70, the Design Basis Earthquake (DBE) is the most severe credible earthquake that could occur at the WIPP site. The DBE is based on a 1000-yr return interval established through a site specific study. The maximum ground acceleration for the DBE is 0.1 g in both the horizontal and vertical directions, with 10 maximum stress cycles.

Based on analysis done at Savannah River Site, the frequency of a fire after an Unlikely Seimic event is in the Extremely Unlikely frequency range (Ref. 9).

Table D-6 - RH7 Tornado Event

This section develops the scenario initiating event probability assuming that the preventative and mitigative measures discussed in Table 5.1-9 function as designed during the accident scenario.

As discussed in (1) in the existing WIPP CH SAR, DOE/WIPP-95-2065, Rev.2, (2) the Project Technical Baseline for Regulatory Compliance WP 02-RC1, and (3) Final Environmental Impact Statement DOE/EIS-0026, UC-70, the Design Basis Tornado (DBT) is the most severe credible tornado (183 mi/hr) that could occur at the WIPP site, based on a 1,000,000-yr. recurrence period.

The DBT was developed by a site specific study SMRP No. 155, "A Site-Specific Study of Wind and Tornado Probabilities at the WIPP Site in Southeast New Mexico," Department of Geophysical Sciences, T. Fujita, University of Chicago, February 1978 and its Supplement of August 1978 (Ref. 10).

Table D-7, NC1 - Fire in Hot Cell

Variable Name	Description	Formula	Resulting value	Comments
F9-1	The frequency of a fire occuring in the Hot Cell while containing stored waste	FIgnition(ES) * Fcomb * L_oxidant * NDrums	4.37E-07	In order for an electrical short to ignite a fire, an electrical fault must occur and the protective device on the circuit (i. e., circuit breaker or fuse) must fail to operate to clear the fault.
FIgnition(ES)	The probability of an electrical short igniting a fire in the Hot Cell in one year	FIgnition(ES)	5.00E-04	Per WSRC-TR-93-26234, the failure of a circuit breaker or fuse is 5.0E-04/demand. If it is conservatively assumed that an electrical short in the equipment in the Hot Cell is present with waste stored in the Hot Cell, then the probability of a fire initiated by an electrical short can be approximated as the demand failure of the circuit breaker or fuse.
FComb	The probability of having sufficient combustibles to generate a large enough fire to ignite the waste material in a drum	FComb	1.00E-04	The probability of having sufficient combustible material in the Hot Cell to generate a large enough fire to ignite the waste material in a drum can be equated to a human error in failing to properly follow procedures. For this case, it is assumed that the failure to properly meet the combustible control program requirements would involve an error to accomplish a clear, unambiguous task and the failure of a checker (not independent in time) to detect the error. Per DOE/WIPP-95-2065, Rev 4
L_oxidant	The probability that there is sufficient oxidant in a waste drum to support a sustained fire	L_oxidant	4.20E-03	Per DOE/WIPP-95-2065, Rev 4
NDrums	Bounding number of RH waste drums transferred by grapple hoist into the facility cask per year	NDrums	2.08E+03	Based on current estimated throughput.
L_filter_WHB	Likelihood the on-line HEPA filter is open or bypassed, given a release of TRU waste in the WHB, and is therefore unavailable to accomplish its function. (Primary cause is human error that leaves the HEPA filter in an undetected bypassed condition)	1.00E-04	/event	This condition requires alignment error at the filter and lack of monitoring by the CMRO. Given the HEPA filter is required to be on-line and the delta-p across the HEPA filter is monitored in the CMR, the estimate is judged to be conservative.

Figure D-4, Event Tree for NC-1 - Fire in Hot Cell (9-1)

Drums per Year	Ignition Source (Electrical Short)	Combustibles Present	Sufficient Oxidant in Drum	HEPA Filtration	Drum Breach Frequency (per Year)
N_{Drums}	$F_{Ignition(ES)}$	F_{Comb}	L_oxidant	L_filter_WHB	F_{9-1}

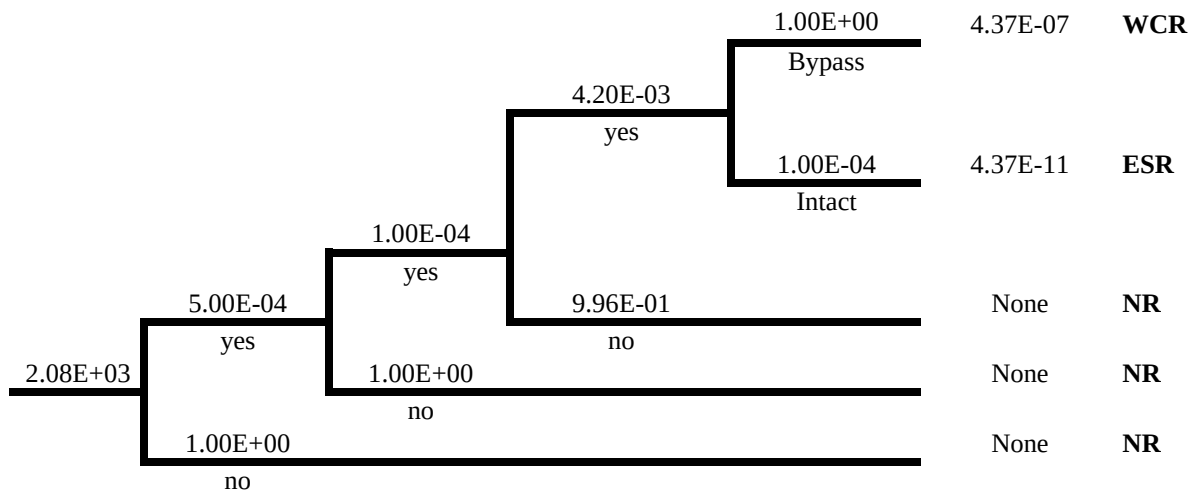

Total Frequency 4.37E-07

LEGEND:

NR: **No Release**
ESR: **Extremely Small Release**
SR: **Small Release**
WCR: **Worst Case Release**

Table D-8, NC3-A - Dropped Object on Waste in Hot Cell

Variable Name	Description	Formula	Resulting value	Comments
F4F-1	The frequency of dropping the shield plug (which separates the Hot Cell from the CUR) on a WIPP Canister in the Hot Cell	NCask * FDrop	7.07E-04	The frequency of this event is a function of the number of 10-160B road casks that are processed each year and the probability of dropping the shield plug while it is being removed.
NCask	The maximum number of 10-160B casks that will be process in one year.	NCask	2.08E+02	Based on current estimated throughput.
FDrop	The probability of a crane drop per lift	FDrop	3.40E-06	Due to all mechanisms (i. e., equipment failure and human error). Per DOE/WIPP-95-2065, Rev 4
F4H-1	The frequency of dropping the cask lid on waste drums in the Hot Cell	NCask * FDrop	7.07E-04	The frequency of this event is a function of the number of 10-160B road casks that are processed each year and the probability of a crane drop
F5CE-2	The frequency of dropping the a drum carriage on waste stored in the hot cell	FDrop * NCarriage	1.41E-03	The frequency of this event is a function of the number of waste drum carriages handled per year and the probability of dropping the carriage while it is being lifted
NCarriage	Number of drum carriages lifted per year	NCarriage	4.16E+02	There are two drum carriages in each 10-160B road cask. Therefore, if 208 10-160B casks are processed each year, 416 drum carriages will be lifted
F9-5	The frequency of knocking over the shield plug lifting fixture by striking it with the crane or its load	NDrums * FCrane Strike * FDrum Plac	6.24E-04	The frequency of this event is a function of the number of crane operations that are close to the shield plug lifting fixture stand and the probability of a human error that results in striking the shield plug lifting fixture with the crane or its load such that it falls over and strikes waste stored in the Hot Cell.
NCanisters	The total number of canisters handled per year	NCanisters	6.93E+02	Since there are three waste drums per canister, the total number of canisters handled per year is 2080/3 or 693 canisters
FCrane Strike	The probability of striking a stationary object with a remotely operated crane	FCrane Strike	3.00E-03	From WSCR-TR-93-58133: This probability is assumed to apply in this case by assuming that the human error failure rate dominates the equipment (hardware) failure rate that could result in the crane striking the lifting fixture.
FDrum Plac	The probability that a waste drum is mis-positioned and left in a location where it can be struck by the falling shield plug lift fixture	FDrum Plac	1.00E-04	This event is modeled as a human error for failure to properly follow procedures. Per DOE/WIPP-95-2065, Rev 4
F9AC-1	The frequency of dropping an empty WIPP Canister on drums in the Hot Cell.	Ncanisters * FDrop	2.36E-03	The frequency of this event is a function of the number WIPP Canisters handled per year and the probability of dropping the canister while it is being lifted.
L_filter_WHB	Likelihood the on-line HEPA filter is open or bypassed, given a release of TRU waste in the WHB, and is therefore unavailable to accomplish its function. (Primary cause is human error that leaves the HEPA filter in an undetected bypassed condition)	1.00E-04	/event	This condition requires alignment error at the filter and lack of monitoring by the CMRO. Given the HEPA filter is required to be on-line and the delta-p across the HEPA filter is monitored in the CMR, the estimate is judged to be conservative.

Figure D-5, Event Tree for NC3-A Dropped Object on Waste Material in Hot Cell

(4F-1, 4H-1, 5CE-2, 9AC-1, 9-5)

4F-1, 4H-1 Cask Lid Drop

Lifts per Year	Crane Drop per Lift	HEPA Filtration	Container Breached Frequency (per Year)
N_{Cask}	F_{Drop}	L_filter_WHB	$F_{4F-1,\ 4H-1}$

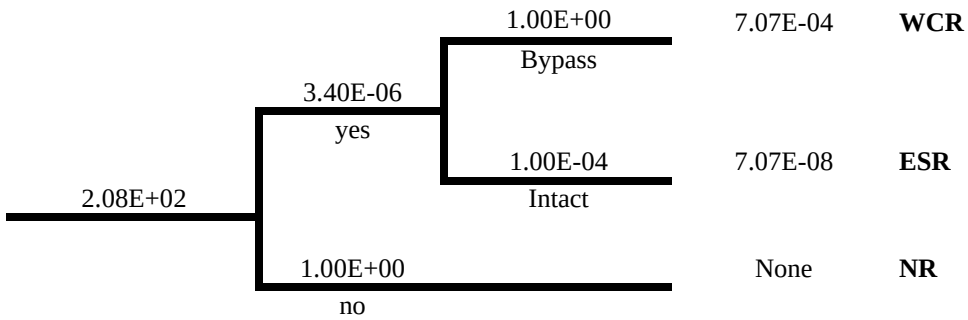

Total Frequency **7.07E-04**

LEGEND:

NR: **No Release**
ESR: **Extremely Small Release**
SR: **Small Release**
WCR: **Worst Case Release**

Figure D-5, Event Tree for NC3-A Dropped Object on Waste Material in Hot Cell

5CE-2 Drum Carriage Drop

Lifts per Year	Crane Drop per Lift	HEPA Filtration	Container Breached Frequency (per Year)
$N_{Carriage}$	F_{Drop}	L_filter_WHB	F_{5CE-2}

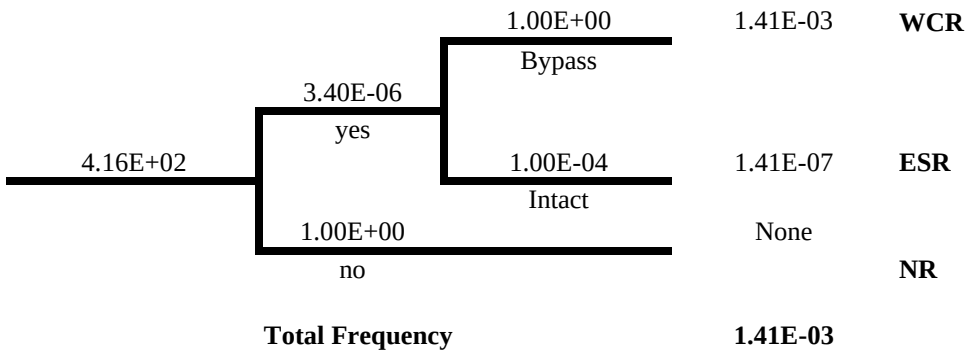

Total Frequency **1.41E-03**

LEGEND:

NR:	**No Release**
ESR:	**Extremely Small Release**
SR:	**Small Release**
WCR:	**Worst Case Release**

Figure D-5, Event Tree for NC3-A Dropped Object on Waste Material in Hot Cell

1.41E-07

9AC-1 Empty Canister Drop

Lifts per Year	Crane Drop per Lift	HEPA Filtration	Container Breached Frequency (per Year)
$N_{Canisters}$	F_{Drop}	L_filter_WHB	F_{9AC-1}

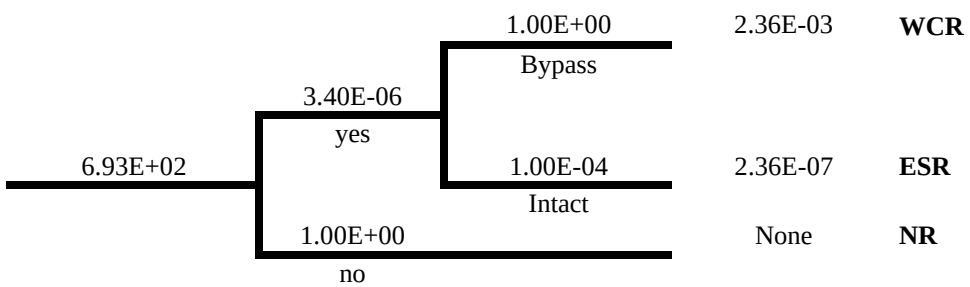

Total Frequency **2.36E-03**

LEGEND:

NR: **No Release**
ESR: **Extremely Small Release**
SR: **Small Release**
WCR: **Worst Case Release**

Figure D-5, Event Tree for NC3-A Dropped Object on Waste Material in Hot Cell

9-5 Inadvertent Knocking over Shield Plug Fixture into Misplaced Drum

Lifts per Year	Crane Strikes Fixture per Lift	Drum Placed within Range of Falling Fixture	HEPA Filtration	Drum Breached Frequency (per Year)
Ndrum	$F_{Crane\ Strike}$	$F_{Drum\ Plac}$	L_filter_WHB	$F_{9\text{-}5}$

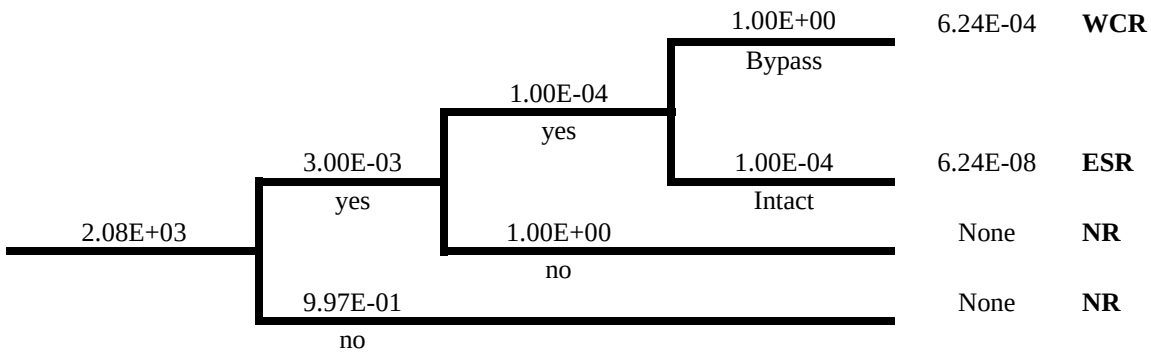

Total Frequency **6.24E-04**

LEGEND:

NR: **No Release**
ESR: **Extremely Small Release**
SR: **Small Release**
WCR: **Worst Case Release**

Table D-9, NC3-B - Dropped Object on Waste Material Outside Hot Cell

Variable Name	Description	Formula	Resulting value	Comments
F4G-1	The frequency of dropping the 10-160B cask lid on the waste drums	NCask * FDrop	7.07E-04	The frequency of this event is a function of the number of 10-160B road casks that are processed each year and the probability of cask lid being dropped while it is being removed.
NCask	The maximum number of 10-160B casks that will be processed in one year.	NCask	2.08E+02	Based on current estimated throughput.
FDrop	The probability of a crane drop per lift	FDrop	3.40E-06	Due to all mechanisms (i. e., equipment failure and human error). Per DOE/WIPP-95-2065, Rev 4
F5BD-1	The frequency of dropping the a drum carriage lifting fixture on the drums after the cask lid has been removed.	FDrop * NCarriage	1.41E-03	The frequency of this event is a function of the number of waste drum carriages handled per year and the probability of dropping the carriage while preparing to remove the waste drum carriages from the cask.
NCarriage	Number of drum carriages lifted per year	NCarriage	4.16E+02	There are two drum carriages in each 10-160B road cask. Therefore, if 208 10-160B casks are processed each year, 416 drum carriages will be lifted
L_filter_WHB	Likelihood the on-line HEPA filter is open or bypassed, given a release of TRU waste in the WHB, and is therefore unavailable to accomplish its function. (Primary cause is human error that leaves the HEPA filter in an undetected bypassed condition)	1.00E-04	/event	This condition requires alignment error at the filter and lack of monitoring by the CMRO. Given the HEPA filter is required to be on-line and the delta-p across the HEPA filter is monitored in the CMR, the estimate is judged to be conservative.

Figure D-6, Event Tree for NC3-B Dropped Object on Waste Material Outside Hot Cell

4G-1 Cask Lid Drop

Lifts per Year	Crane Drop per Lift	HEPA Filtration	Container Breached Frequency (per Year)
N_{Cask}	F_{Drop}	L_filter_WHB	F_{4G-1}

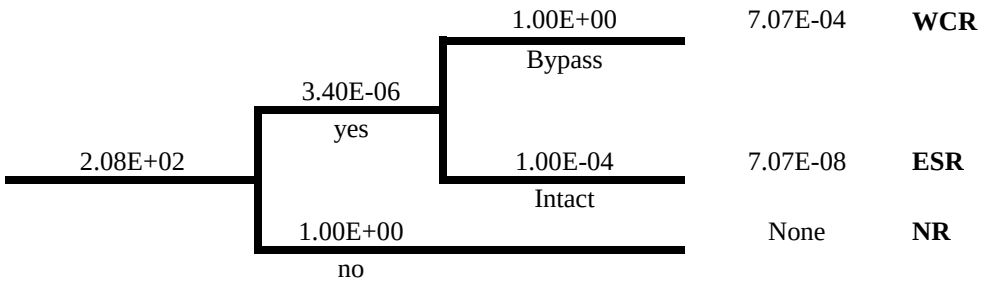

Total Frequency **7.07E-04**

LEGEND:

NR: **No Release**
ESR: **Extremely Small Release**
SR: **Small Release**
WCR: **Worst Case Release**

Figure D-6, Event Tree for NC3-B Dropped Object on Waste Material Outside Hot Cell

5BD-1 Drum Carriage Lifting Fixture Drop

Lifts per Year	Crane Drop per Lift	HEPA Filtration	Container Breached Frequency (per Year)
$N_{Carriage}$	F_{Drop}	L_filter_WHB	F_{5BD-1}

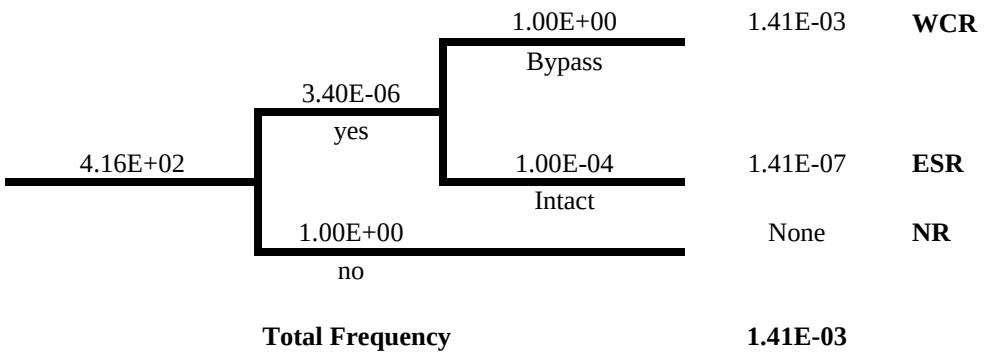

Total Frequency **1.41E-03**

LEGEND:

NR: **No Release**
ESR: **Extremely Small Release**
SR: **Small Release**
WCR: **Worst Case Release**

Table D-10, NC3-C - Dropped Drum or Canister in Hot Cell

Variable Name	Description	Formula	Resulting value	Comments
F10B-1	The frequency of having a drum lid come off during lifting, resulting in the drum being dropped.	NDrums * FDrop * FDrum Fail	2.12E-03	The frequency of this event is a function of the number of waste drums that are processed each year and the probability of dropping a drum while lifting it to be placed into a facility canister.
NDrums	Bounding number of RH waste drums transferred into a facility canister per year	NDrums	2.08E+03	Based on current estimated throughput.
FDrop	The probability of a crane drop per lift	FDrop	3.40E-06	Due to all mechanisms (i. e., equipment failure and human error). Per DOE/WIPP-95-2065, Rev 4
FDrum Fail	The probability that a drum is failed by a drop in the Hot Cell	FDrum Fail	3.00E-01	Per DOE/WIPP-95-2065, Rev 4, the probability that one drum in a seven pack that is dropped ten feet fails is given as 0.62. However, this probability includes the crushing effect of the other drums in the package. Since in this case a single drum is dropped, the probability of failure would be lower and is assumed to be 0.3, half the probability from the given reference.
F11F-1	The frequency of dropping a loaded facility canister in the Hot Cell while being lifted in preparation for placing it in a facility cask.	NCanisters * FDrop *	2.36E-03	The frequency of this event is a function of the number of facility canisters that are processed through the Hot Cell each year and the probability of dropping a canister while lifting it to be placed into the facility cask.
NCanisters	The total number of canisters handled per year	NCanisters	6.93E+02	Since there are three waste drums per canister, the total number of canisters handled per year is 2080/3 or 693 canisters
L_filter_WHB	Likelihood the on-line HEPA filter is open or bypassed, given a release of TRU waste in the WHB, and is therefore unavailable to accomplish its function. (Primary cause is human error that leaves the HEPA filter in an undetected bypassed condition)	1.00E-04	/event	This condition requires alignment error at the filter and lack of monitoring by the CMRO. Given the HEPA filter is required to be on-line and the delta-p across the HEPA filter is monitored in the CMR, the estimate is judged to be conservative.

Figure D-7, NC3-C Dropped Drum or Canister in Hot Cell

10BF-1 Crane Drops Drum

Lifts per Year	Crane Drop per Lift	Drum Failure from Impact	HEPA Filtration	Container Breached Frequency (per Year)
N_{Drums}	F_{Drop}	$F_{Drum\ Fail}$	L_filter_WHB	F_{10FB-1}

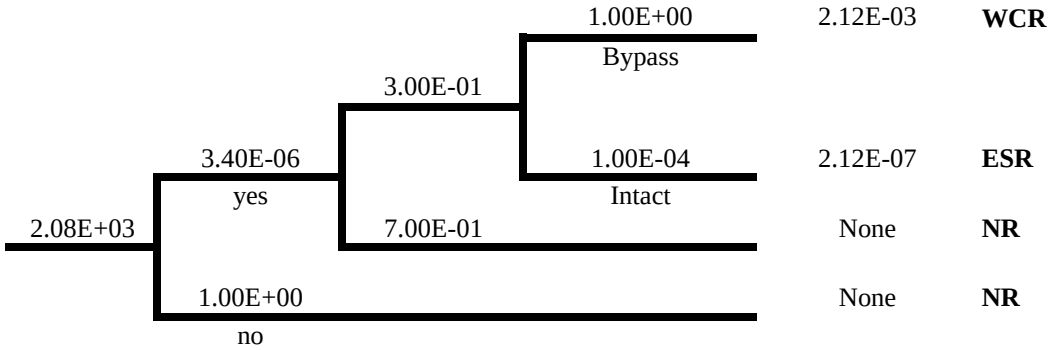

Total Frequency **2.12E-03**

NR: **No Release**
ESR: **Extremely Small Release**
SR: **Small Release**
WCR: **Worst Case Release**

Figure D-7, NC3-C Dropped Drum or Canister in Hot Cell

11F-1 Crane Drops Loaded Canister

Lifts per Year	Crane Drop per Lift	HEPA Filtration	Container Breached Frequency (per Year)
$N_{Canisters}$	F_{Drop}	L_filter_WHB	F_{11F-1}

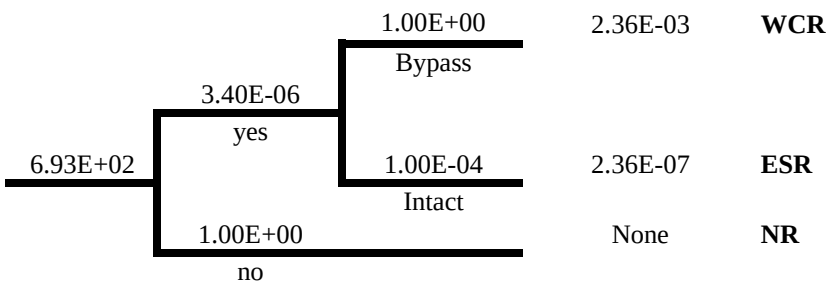

2.36E-03	**WCR**
2.36E-07	**ESR**
None	**NR**

Total Frequency **2.36E-03**

NR: **No Release**
ESR: **Extremely Small Release**
SR: **Small Release**
WCR: **Worst Case Release**

Table D-11, NC3-D - Dropped Drum or Canister Outside Hot Cell

Variable Name	Description	Formula	Resulting value	Comments
F5CE-1	The frequency of dropping a loaded drum carriage in the CUR while removing the carriage from a 10-160B Cask.	NCarriage * FDrop	1.41E-03	The frequency of this event is a function of the number of waste drum carriages that are processed through the Hot Cell each year and the probability of dropping the drum carriage while lifting it from the 10-160B Cask.
NCarriage	Number of drum carriages lifted per year	NCarriage	4.16E+02	There are two drum carriages in each 10-160B road cask. Therefore, if 208 10-160B casks are processed each year, 416 drum carriages will be lifted
FDrop	The probability of a crane drop per lift	FDrop	3.40E-06	Due to all mechanisms (i. e., equipment failure and human error). Per DOE/WIPP-95-2065, Rev 4
F12E-1	The frequency of dropping a loaded WIPP Canister into the Transfer Cell while being lifted in preparation for placing it in a facility cask.	NCanisters * FDrop	2.36E-03	The frequency of this event is a function of the number of facility canisters that are processed through the Hot Cell each year and the probability of dropping the canister.
NCanisters	The total number of canisters handled per year	NCanisters	6.93E+02	Since there are three waste drums per canister, the total number of canisters handled per year is 2080/3 or 693 canisters
L_filter_WHB	Likelihood the on-line HEPA filter is open or bypassed, given a release of TRU waste in the WHB, and is therefore unavailable to accomplish its function. (Primary cause is human error that leaves the HEPA filter in an undetected bypassed condition)	1.00E-04	/event	This condition requires alignment error at the filter and lack of monitoring by the CMRO. Given the HEPA filter is required to be on-line and the delta-p across the HEPA filter is monitored in the CMR, the estimate is judged to be conservative.

Figure D-8, NC3-D Dropped Drum or Canister Outside Hot Cell

5CE-1 Crane Drops Loaded Drum Carriage

Lifts per Year	Crane Drop per Lift	HEPA Filtration	Container Breached Frequency (per Year)
$N_{Carriage}$	F_{Drop}	L_filter_WHB	F_{5CE-1}

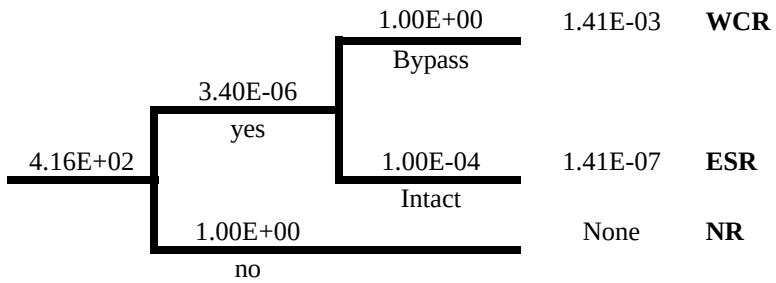

Total Frequency **1.41E-03**

NR: **No Release**
ESR: **Extremely Small Release**
SR: **Small Release**
WCR: **Worst Case Release**

Figure D-8, NC3-D Dropped Drum or Canister Outside Hot Cell

12E-1 Crane Drops Loaded Canister

Lifts per Year	Crane Drop per Lift	HEPA Filtration	Container Breached Frequency (per Year)
$N_{Canisters}$	F_{Drop}	L_filter_WHB	F_{12E-1}

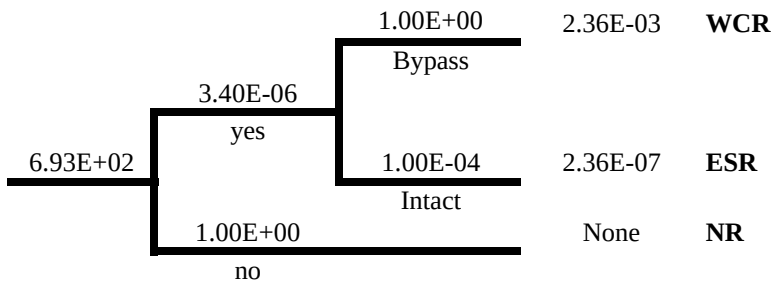

Total Frequency **2.36E-03**

NR: **No Release**
ESR: **Extremely Small Release**
SR: **Small Release**
WCR: **Worst Case Release**

Table D-12, NC3-E - Puncture of Drum or Canister in Hot Cell

Variable Name	Description	Formula	Resulting value	Comments
F10A-1	The frequency of puncturing a waste drum or facility canister by the PAR manipulator during handling operations to place the drum in a WIPP Canister for disposal.	NDrums * FDrum Fail * FStrike	2.08E-03	The frequency of this event is a function of the number of waste drums handled using the PAR manipulator per year, the probibility of an error by the operator while using the PAR manipulator shch that the arm strikes a waste drum, and the probability that the drum is ruptured or pierced given that it is struck by the arm.
NDrums	Bounding number of RH waste drums transferred into a facility canister per year	NDrums	2.08E+03	Based on current estimated throughput.
FDrum Fail	The probability that a drum is failed by a drop in the Hot Cell	FDrum Fail	1.00E-03	Per DOE/WIPP-95-2065, Rev 4, the probability that one drum in a seven pack that is dropped ten feet fails is given as 0.62. However, this probability includes the crushing effect of the other drums in the package. Since in this case a single drum is dropped, the probability of failure would be lower and is assumed to be 0.3, half the probability from the given reference.
FStrike	The frequency of striking the drum the the PAR manipulator arm.	FStrike	1.00E-03	This event is equivalent to the failure to follow a clear, unambiguous procedure.
L_filter_WHB	Likelihood the on-line HEPA filter is open or bypassed, given a release of TRU waste in the WHB, and is therefore unavailable to accomplish its function. (Primary cause is human error that leaves the HEPA filter in an undetected bypassed condition)	1.00E-04	/event	This condition requires alignment error at the filter and lack of monitoring by the CMRO. Given the HEPA filter is required to be on-line and the delta-p across the HEPA filter is monitored in the CMR, the estimate is judged to be conservative.

Figure D-9, NC3-E Puncture of Drum or Canister in Hot Cell

10A-1 Puncture of Drum

Operations per Year	PAR Manipulator Strikes Drum (Operator Error)	Drum Failure from Impact	HEPA Filtration	Container Breached Frequency (per Year)
N_{Drums}	F_{Strike}	$F_{Drum\ Fail}$	L_filter_WHB	F_{10A-1}

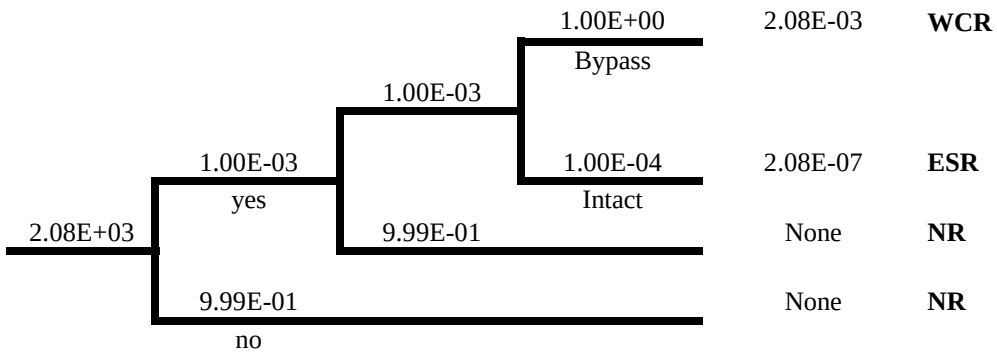

Total Frequency **2.08E-03**

NR: **No Release**
ESR: **Extremely Small Release**
SR: **Small Release**
WCR: **Worst Case Release**

Table D-13, NC3-F Puncture of Drum or Canister Outside Hot Cell

Variable Name	Description	Formula	Resulting value	Comments
F12E-2	The frequency of puncturing a facility canister by the Hot Cell shield valve closing while a canister is being transferred.	NCanisters * FClosing	1.39E-10	The frequency of this event is a function of the number of facility canisters processed through the Hot Cell in a year and the probibility of spurious movement of the shuttle car during placement of the canister.
NCanisters	The total number of canisters handled per year	NCanisters	6.93E+02	Since there are three waste drums per canister, the total number of canisters handled per year is 2080/3 or 693 canisters
FClosing	The probability of a shield valve closing on the canister.	FClosing	2.00E-13	Per PLG 1317.
F12E-3	The frequency of inadvertent crane movement while transfering a WIPP Canister from the Hot Cell to the Transfer Cell	FCrane * FDrum Rupture * NCanisters	1.39E-03	The frequency of this event is a function of the number of facility canisters processed through the Hot Cell in a year and the probability of spurious movement of the crane during placement of the canister and the probability that the resulting impact rupures the canister.
FDrum Rupture	The probability of rupturing a facility canister.	FDrum Rupture	2.00E-03	EANL/EAD/TM-29 provides estimates of the conditional probability of rupture of a waste drum due to impact during waste handling operations. Since a facility canister is more robust than a waste drum, it is expected that it would be less likely to suffer rupture from an impact than a waste drum would.
FCrane	The probability of suprious movement of the crane	FCrane	1.00E-03	The spurious movement of the crane during transfer of a facility canister could be the result of either human error or equipment failure. However, EEG 74 indicates that 90 to 95% of all crane incidents are caused by operator error. Therefore, for this analysis it is assumed that the spurious movement of the crane is due to an operator error.
F12E-4	The frequency of inadvertent movement of the shuttle car in the Transfer Cell while a facility canister is being lowered into the facilty cask.	NCanisters * FShutt Car Mov	2.29E-09	The frequency of this event is a function of the number of facility canisters processed through the Hot Cell in a year and the probability of spurious movement of the shuttle car during placement of the canister.
FShutt Car Mov	The probability of suprious movement of the Shuttle Car	FShutt Car Mov	3.30E-12	PLG-1317, Waste Isolation Pilot Plant 6.25 Grapple Hoist Fault Tree Analysis
L_filter_WHB	Likelihood the on-line HEPA filter is open or bypassed, given a release of TRU waste in the WHB, and is therefore unavailable to accomplish its function. (Primary cause is human error that leaves the HEPA filter in an undetected bypassed condition)	L_filter_WHB	1.00E-04	This condition requires alignment error at the filter and lack of monitoring by the CMRO. Given the HEPA filter is required to be on-line and the delta-p across the HEPA filter is monitored in the CMR, the estimate is judged to be conservative.

Figure D-10, NC3-F Puncture of Drum or Canister Outside Hot Cell

12E-2 Canister Puncture by Spurious Shield Valve Closing

Transfers per Year	Spurious Shield Closing on Canister	HEPA Filtration	Container Breached Frequency (per Year)
$N_{Canisters}$	$F_{Closing}$	L_filter_WHB	F_{12E-2}

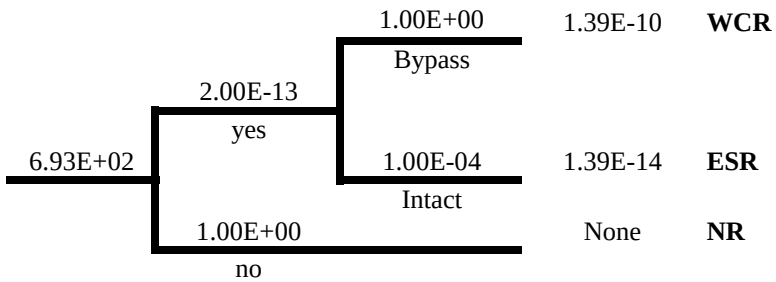

Total Frequency **1.39E-10**

NR: **No Release**
ESR: **Extremely Small Release**
SR: **Small Release**
WCR: **Worst Case Release**

Figure D-10, NC3-F Puncture of Drum or Canister Outside Hot Cell

12E-3 Canister Puncture by Spurious Crane Movement

Transfers per Year	Spurious Crane Movement (Operator Error)	Drum Rupture from Impact	HEPA Filtration	Container Breached Frequency (per Year)
$N_{Canisters}$	F_{Crane}	$F_{Drum\ Rupture}$	L_filter_WHB	F_{12E-3}

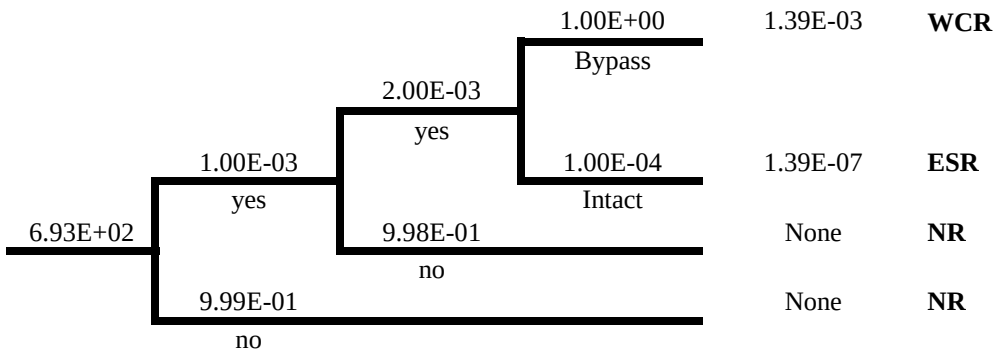

Total Frequency **1.39E-03**

NR: **No Release**
ESR: **Extremely Small Release**
SR: **Small Release**
WCR: **Worst Case Release**

Figure D-10, NC3-F Puncture of Drum or Canister Outside Hot Cell

12E-4 Canister Puncture by Spurious Shuttle Car Movement

Lifts per Year	Spurious Shuttle Car Movement During Lift	HEPA Filtration	Container Breached Frequency (per Year)
$N_{Canisters}$	$F_{Shutt\ Car\ Mov}$	L_filter_WHB	F_{12E-4}

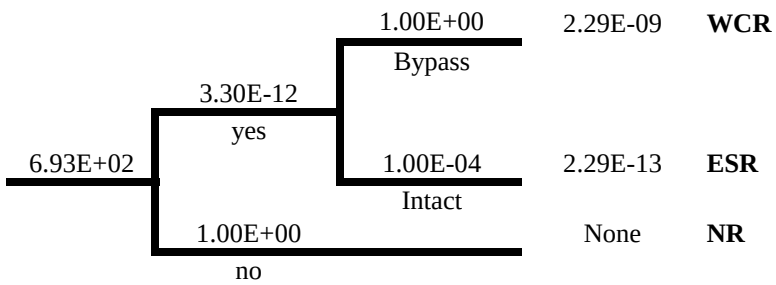

Total Frequency **2.29E-09**

NR: **No Release**
ESR: **Extremely Small Release**
SR: **Small Release**
WCR: **Worst Case Release**

Table D-14, NC3-G Puncture of 10-160B Road Cask in RH Bay

Variable Name	Description	Formula	Resulting value	Comments
NBottles	The maximum number of compressed gas cylindes that will be moved in the RH bay in one year.	NBottles	1.60E+01	There are 2 compressed gas bottles in the RH Bay at a time, it is assummed that the cylinders will be changed out 4 times per year, there would be 8 opportunities for this event to occur. For conservatism, 16 cylinders are assumed to be moved in the RH Bay per year.
FDrum Rupture	The probability of a gas cylinder breaching a drum in a . 10-160B cask.	FDrum Rupture	1.00E-02	This a conditional probability for a drum inside the cask to be damaged and release its contents.
FGas Btl Moved	The probability of a gas cylinder movement (operator error) with a 10-160B cask is in the RH Bay	FGas Btl Moved	1.00E-04	Per DOE/WIPP-95-2065, Rev 4, this can be equated to the probability of a human errer in failing to properly follow procedures and the failure of a checker (not independent in time) to detect the error.
FCask Hit	The probability of the random direction of the gas cylinder missile hitting the cask.	FCask Hit	1.40E-02	Per DOE/WIPP-95-2065, Rev 4
FMissile	The probability for a gas cylinder to fall and become a missile	FMissile	2.00E-02	It is conservatively assumed that this sequence of events has a conditional probability. Because of the round shape and robustness of the Type B Shipping Cask, the missile must make a head-on strike of the cask.
L_filter_WHB	Likelihood the on-line HEPA filter is open or bypassed, given a release of TRU waste in the WHB, and is therefore unavailable to accomplish its function. (Primary cause is human error that leaves the HEPA filter in an undetected bypassed condition)	1.00E-04	/event	This condition requires alignment error at the filter and lack of monitoring by the CMRO. Given the HEPA filter is required to be on-line and the delta-p across the HEPA filter is monitored in the CMR, the estimate is judged to be conservative.

Figure D-11, NC3-G Puncture of 10-160B Road Cask in RH Bay

1B-6 Puncture of 10-160B Road Cask by Compressed Gas Cylinder

Gas Cylinder Transfers per Year	Gas Cylinder Movement (Operator Error)	Gas cylinder dropped, becomes missile	Gas cylinder strikes Cask	Release from Drums	HEPA Filtration	Cask breached (per Year)	
$N_{Bottles}$	$F_{Gas\ Btl\ Moved}$	F_{Missle}	$F_{Cask\ Hit}$	$F_{Drum\ Rupture}$	L_filter_WHB	F_{1B-6}	
					1.00E+00 Bypass	4.48E-09	**WCR**
				1.00E-02 yes			
			1.40E-02 yes		1.00E-04 Intact	4.48E-13	**ESR**
		2.00E-02 yes		9.90E-01 no		None	**NR**
	1.00E-04 yes		9.86E-01 no			None	**NR**
1.60E+01		9.80E-01 no				None	**NR**
	1.00E+00 no					None	**NR**
				Total Frequency		**4.48E-09**	

NR: **No Release**
ESR: **Extremely Small Release**
SR: **Small Release**
WCR: **Worst Case Release**

Table D-15, NC5 Explosion followed by Fire in Hot Cell

Variable Name	Description	Formula	Resulting value	Comments
F9-2	The frequency of an explosion followed by a fire in the Hot Cell	NDrums F Exp Mix L_oxidant F Ignition (OE)	8.74E-07	This frequency is a function of having an explosive gas mixture in the drum, sufficient oxidant to supporat a sustained fire and having an ignition source.
NDrums	Bounding number of RH waste drums transferred into a facility canister per year	NDrums	2.08E+03	Based on current estimated throughput.
F Exp Mix	Probability of explosive gas mixture in drum	F Exp Mix	1.00E-04	The probability of having an explosive gas mixture in a waste drum can be equated to a human error in failing to properly follow procedures in the preparation of the drum for shipment to WIPP. Per DOE/WIPP-95-2065, Rev 4
L_oxidant	The probability that there is sufficient oxidant in a waste drum to support a sustained fire	L_oxidant	4.20E-03	Per DOE/WIPP-95-2065, Rev 4
F Ignition (OE)	The probability of generating a spark that ignites the flammable gas in a waste drum	F Ignition (OE)	1.00E-03	Per DOE/WIPP-95-2065, Rev 4, this can be equated to the probability of a human errer in failing to properly follow procedures.
F11D-2	The frequency of an explosion in the Hot Cell **WELDER REMOVED**	NCanisters F Exp Mix Can L_oxidant F Ignition (Weld)	0.00E+00	This frequency is a function of having an explosive gas mixture in a drum, sufficient oxidant to supporat a sustained fire and having an ignition source.
NCanisters	The total number of canisters handled per year	NCanisters	6.93E+02	Since there are three waste drums per canister, the total number of canisters handled per year is 2080/3 or 693 canisters
F Exp Mix Can	Probability of explosive gas mixture in drum in a facility canister **WELDER REMOVED**	F Exp Mix Can	3.00E-04	Since there are three waste drums in each facility canister at the time a facility canister lid is welded, the probability that there is a waste drum with an explosive gas mixture in the canister at the time of welding is 3 times the probability of having an explosive gas mixture in a waste drum.
F Ignition (Weld)	The probability of generating a spark that ignites the flammable gas in a waste drum during welding **WELDER REMOVED**	F Ignition (Weld)	0.00E+00	The probability of a spark being created during welding of a facility canister lid in the Hot Cell would require either a human error (i. e., failure to follow proper procedures) or equipment failure (i. e., failure of the robotic welder).
L_filter_WHB	Likelihood the on-line HEPA filter is open or bypassed, given a release of TRU waste in the WHB, and is therefore unavailable to accomplish its function. (Primary cause is human error that leaves the HEPA filter in an undetected bypassed condition)	1.00E-04	/event	This condition requires alignment error at the filter and lack of monitoring by the CMRO. Given the HEPA filter is required to be on-line and the delta-p across the HEPA filter is monitored in the CMR, the estimate is judged to be conservative.

Figure D-12, NC5 Explosion followed by Fire in Hot Cell

Explosion/Fire in Hot Cell (9-2)

Drums per Year	Explosive Gas in Drum	Sufficient Oxidant in Drum	Ignition Source (Operator Error)	HEPA Filtration	Drum Breach Frequency (per Year)
N_{Drums}	$F_{Exp\ Mix}$	L_oxidant	$F_{Ignition(OE)}$	L_filter_WHB	$F_{9\text{-}2}$

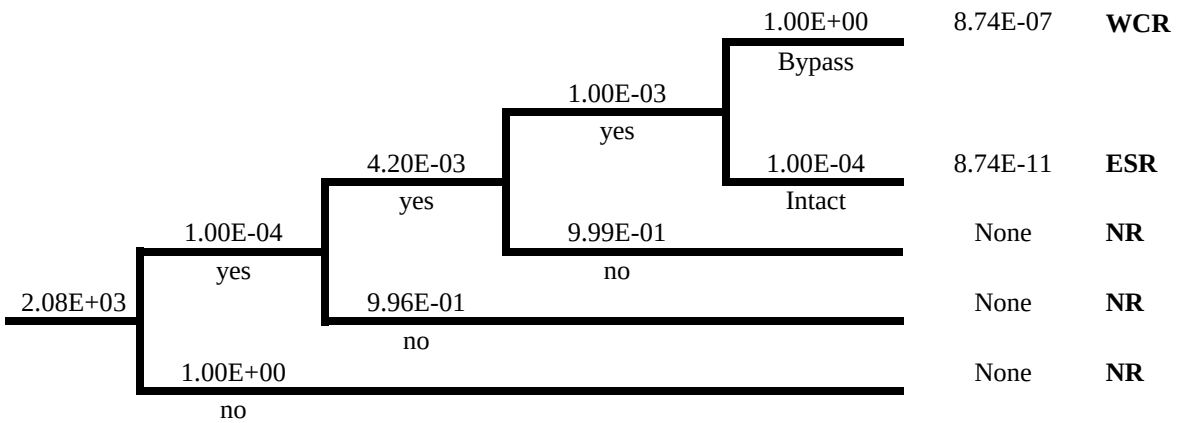

Total Frequency **8.74E-07**

NR: **No Release**
ESR: **Extremely Small Release**
SR: **Small Release**
WCR: **Worst Case Release**

Figure D-12, NC5 Explosion followed by Fire in Hot Cell

Explosion in Hot Cell (11D-2)

Canister per Year	Explosive Gas in Canister	Sufficient Oxidant in Drum	Ignition Source (Welding) **welder removed**	HEPA Filtration	Canister Breach Frequency (per Year)	
$N_{Canisters}$	$F_{Exp\ Mix\ Can}$	L_oxidant	$F_{Ignition(Weld)}$	L_filter_WHB	F_{11D-2}	
				1.00E+00 Bypass	0.00E+00	**NR**
			0.00E+00 yes			
		4.20E-03 yes		1.00E-04 Intact	0.00E+00	**NR**
	3.00E-04 yes		1.00E+00 no		None	**NR**
6.93E+02		9.96E-01 no			None	**NR**
	1.00E+00 no				None	**NR**
			Total Frequency		**0.00E+00**	

NR: **No Release**
ESR: **Extremely Small Release**
SR: **Small Release**
WCR: **Worst Case Release**

REFERENCES

1. DOE/WIPP-96-2196, Waste Isolation Pilot Plant, TRUPACT Crane System Analysis, September 1996.

2. WSRC-TR-93-262, "Savannah River Site Generic Data Base Development (U), Savannah River Site, Aiken, SC.

3. INEL-94/0226, Rev.3, Radioactive Waste management Complex Safety Analysis Report, Idaho National Engineering and Environmental laboratory, Lockheed Martin Idaho Technologies Company, Idaho Falls, Idaho 83415

4. DOE/WIPP 95-2065, Rev.2, Waste Isolation Pilot Plant Safety Analysis Report, Waste Isolation Pilot Plant, Carlsbad, N.M.

5. WSRC-TR-93-581,"Savannah River Site Human Error Data Base Development For Nonreactor Nuclear Facilities (U)", Savannah River Site, Aiken, SC.

6. DOE/WIPP 87-005, Waste Drum Fire Propagation at the WIPP, April 1987

7. 1997 Motor Vehicle Crash Date From FARS and GES, Traffic Safety Facts, TABLE 38, Department of Transportation

8. WIPP/WID-96-2178, WIPP Hoist Brake System Analysis, July 1996.

9. Post-Seismic Fire Probability for the Consolidated Tritium Facility (U), F-CLC-H-00012, Rev. 0, Westinghouse Savannah River Company, Savannah River Site, Aiken, S.C., March 1996.

10. SMRP No. 155, "A Site-Specific Study of Wind and Tornado Probabilities at the WIPP Site in Southeast New Mexico," Department of Geophysical Sciences, T. Fujita, University of Chicago, February 1978 and its Supplement of August 1978.

This page intentionally blank

APPENDIX E

Source Term/Dose
Calculations

This page intentionally blank

TABLE E-1 SOURCE TERM ANALYSIS FOR RH 3 LOC IN THE WHB

CI (PE-Ci)	CD	MAR (PE-Ci)	DR	ARF	CF	CRF	NCF	NCRF	Mit. LPF w/HEPA	Mit. Q (PE-Ci)	Unmit. Q (PE-Ci)
Direct Load											
80	1	80	1.00E+00	1.00E-03	5.00E-02	1.00E-01	9.50E-01	1.00E+00	1.00E-06	7.64E-08	7.64E-02
Double Containment											
240	1	240	1.00E-01	1.00E-03	5.00E-02	1.00E-01	9.50E-01	1.00E+00	1.00E-06	2.29E-08	2.29E-02

Q = MAR*DR*ARF*RF*LPF

Q=(CD*CI*DR*ARF*((CF*CRF)+(NCF*NCRF)))*LPF

where:

Q = the source term (Ci)

CD = # of containers damaged

CI = the waste container inventory

MAR = CD * CI

DR = Damage Ratio =The DR is that fraction of the MAR actually impacted by the accident condition.

ARF = Airborne Release Fraction=The fraction of radioactive material that is suspended in air.

CF = Combustible Fraction = Percentage of the MAR that is combustible

CRF = Combustible Respirable Fraction = The percentage of combustible material that is in the respirable size range

NCF = Noncombustible Fraction = Percentage of the MAR that is noncombustible.

NCRF = Noncombustible Respirable Fraction = The percentage of noncombustible material that is in the respirable size range.

LPF = Leakpath Factor =the cumulative fraction of airborne material that escapes to the atmosphere from the postulated accident (i.e. HEPA Filtration, plateout)

TABLE E-2 ON-SITE AND OFF-SITE CONSEQUENCE ANALYSIS FOR RH3 LOC IN THE WHB

	Q (PE-Ci)	On-Site (100 m) X/Q (s/m3)	Exclusive Use Area X/Q (s/m3)	Site Boundary X/Q (s/m3)	BR (m3/s)	DCF (rem/Ci)	On-Site (100 m) CEDE (rem)	Exclusive Use Area CEDE (rem)	Site Boundary CEDE (rem)
Mitigated									
Direct Load	7.64E-08	5.07E-03	4.00E-04	2.98E-05	3.33E-04	5.10E+08	6.58E-05	5.19E-06	3.87E-07
Double Containment	2.29E-08	5.07E-03	4.00E-04	2.98E-05	3.33E-04	5.10E+08	1.97E-05	1.56E-06	1.16E-07
Unmitigated									
Direct Load	7.64E-02	5.07E-03	4.00E-04	2.98E-05	3.33E-04	5.10E+08	6.58E+01	5.19E+00	3.87E-01
Double Containment	2.29E-02	5.07E-03	4.00E-04	2.98E-05	3.33E-04	5.10E+08	1.97E+01	1.56E+00	1.16E-01

Committed Effective Dose Equivalent (CEDE) = D =Q * X/Q * BR * DCF (Ref. Eq. 5-5)

where:

Q = the source term (Ci)

X/Q = Site specific air dispersion factor (s/m3)

BR =Breathing rate (standard man) (m3/s) International Commission on Radiological Protection (ICRP) No. 23 (Light activity 20.0 liters/min or 3.33 E-04 m3/s)

DCF = Internal Dose Conversion Factor (Pu-239 Class W CEDE Inhalation 5.1E+02 rem/uCi or 5.10E+08 rem/Ci)

TABLE E-3 RH3 CHEMICAL SOURCE TERM/ CONSEQUENCE ANALYSIS FOR LOC IN THE WHB

Compound	MAR (mg/ canister)	CD (canister)	Q (canister) (mg)	RR (sec)	On-site (100 meters) X/Q(s/m3)	Exclusive Use Area X/Q (s/m3)	Site Boundary X/Q (s/m3)	On-site (100 meters) C (mg/m3)	Exclusive Use Area C (mg/m3)	Site Boundary C (mg/m3)	Limiting On-site Criteria (mg/m3)	Limiting Off-site Criteria (mg/m3)	Ratio (conc/limit) (100 meters)	Ratio (conc/limit) Exclusive Use Area	Ratio (conc/limit) Site Boundary
Canister															
methylene chloride*	8.88E+02	1	8.88E+02	1.00E+00	5.07E-03	4.00E-04	2.98E-05	4.50E+00	3.55E-01	2.65E-02	1.25E+04	2.50E+03	0.04%	0.01%	0.00%
chloroform	8.57E+01	1	8.57E+01	1.00E+00	5.07E-03	4.00E-04	2.98E-05	4.34E-01	3.43E-02	2.55E-03	2.50E+04	2.50E+02	0.00%	0.01%	0.00%
carbon tetrachloride*	1.64E+03	1	1.64E+03	1.00E+00	5.07E-03	4.00E-04	2.98E-05	8.31E+00	6.56E-01	4.88E-02	4.00E+03	6.00E+02	0.21%	0.11%	0.01%
1,1,2,2-Tetrachloroethane	4.48E+01	1	4.48E+01	1.00E+00	5.07E-03	4.00E-04	2.98E-05	2.27E-01	1.79E-02	1.34E-03	6.00E+02	3.50E+01	0.04%	0.05%	0.00%

C = (Q*X/Q)/RR

where:

C =Concentration (mg/m3)

Q = Source Term (mg)

RR =Release rate- the RR is the amount of material suspended in air as a function of time.

X/Q = Site specific air dispersion factor (s/m3)

TABLE E-4 SOURCE TERM ANALYSIS FOR RH4-A LOC IN THE UNDERGROUND (WASTE HOIST DROP)

Q (PE-Ci)	CD (dropped)	MAR (PE-Ci)	DR	ARF	CF	CRF	NCF	Mit. LPF w/HEPA	Mit. Q (PE-Ci)	Unmit. Q (PE-Ci)
Direct Load										
80	1	80	2.50E-01	1.00E-03	5.00E-02	1.00E-01	9.50E-01	1.00E-06	1.91E-08	1.91E-02
Double Containment										
240	1	240	2.50E-02	1.00E-03	5.00E-02	1.00E-01	9.50E-01	1.00E-06	5.73E-09	5.73E-03

Q = MAR*DR*ARF*RF*LPF

Q=(CD*CI*DR*ARF*((CF*CRF)+NCF))*LPF

where:

Q = the source term (Ci)

Mit.Q = the mitigated source term (*with* HEPA filtration)

Unmit. Q = the unmitigated source term (*without* HEPA filtration)

CD (drop) =# of containers damaged by drop

CI = the waste container inventory

MAR = CD * CI

DR = Damage Ratio = The DR is that fraction of the MAR actually impacted by the accident condition.

ARF = Airborne Release Fraction=The fraction of radioactive material that is suspended in air.

CF = Combustible Fraction = Percentage of the MAR that is combustible.

CRF = Combustible Respirable Fraction = The percentage of combustible material that is in the respirable size range

NCF = Noncombustible Fraction = Percentage of the MAR that is noncombustible.

NCRF = Noncombustible Respirable Fraction = The percentage of noncombustible material that is in the respirable size range.

LPF = Leakpath Factor = the cumulative fraction of airborne material that escapes to the atmosphere (i.e.,HEPA filtration; plateout)

TABLE E-5 ON-SITE AND OFF-SITE CONSEQUENCE ANALYSIS FOR RH4-A LOC IN THE UNDERGROUND (WASTE HOIST DROP)

	Q (PE-Ci)	On-Site (100 meters) X/Q (s/m3)	Exclusive Use Area X/Q (s/m3)	Site Boundary X/Q (s/m3)	BR (m3/s)	DCF (rem/Ci)	On-Site (100 meters) CEDE (rem)	Exclusive Use Area CEDE (rem)	Site Boundary CEDE (rem)
Mitigated									
Direct Load	1.91E-08	4.50E-03	4.21E-04	2.91E-05	3.33E-04	5.10E+08	1.46E-05	1.37E-06	9.44E-08
Double Containment	5.73E-09	4.50E-03	4.21E-04	2.91E-05	3.33E-04	5.10E+08	4.38E-06	4.10E-07	2.83E-08
Unmitigated									
Direct Load	1.91E-02	4.50E-03	4.21E-04	2.91E-05	3.33E-04	5.10E+08	1.46E+01	1.37E+00	9.44E-02
Double Containment	5.73E-03	4.50E-03	4.21E-04	2.91E-05	3.33E-04	5.10E+08	4.38E+00	4.10E-01	2.83E-02

Committed Effective Dose Equivalent (CEDE) = D = Q * X/Q * BR * DCF (Ref. Eq. 5-5)

where:

Q = the source term (Ci)

X/Q = Site specific air dispersion factor (s/m3)

BR =Breathing rate (standard man) (m3/s) International Commission on Radiological Protection (ICRP) No. 23 (Light activity 20.0 liters/min or 3.33 E-04 m3/s)

DCF =Dose Conversion Factor (rem/Ci) Internal Dose Conversion Factors for Calculation of Dose to the Public (Pu-239 Class W CEDE Inhalation 5.1E+02 rem/uCi or 5.1E+08 re

TABLE E-6 CHEMICAL SOURCE TERM/CONSEQUENCE ANALYSIS FOR RH4-A LOC IN THE UNDERGROUND (WASTE HOIST DROP)

Compound	MAR (mg/ canister)	CD (canisters)	Q (canister) (mg)	RR (1/1 sec)	On-site (100 meters) X/Q(s/m3)	Exclusive Use Area X/Q (s/m3)	Site Boundary X/Q (s/m3)	On-site (100 meters) C (mg/m3)	Exclusive Use Area C (mg/m3)	Site Boundary C (mg/m3)	Limiting On-site Criteria (100meter) (mg/m3)	Limiting Off-site Criteria (mg/m3)	Ratio (conc/limit) (100 meters)	Ratio (conc/limit) Exclusive Use Area	Ratio (conc/limit) Site Boundary
Canisters															
methylene chloride	8.87E+02	1	8.87E+02	1.00E+00	4.50E-03	4.21E-04	2.91E-05	3.99E+00	3.74E-01	2.58E-02	1.25E+04	2.50E+03	0.03%	0.01%	0.00%
chloroform	8.57E+01	1	8.57E+01	1.00E+00	4.50E-03	4.21E-04	2.91E-05	3.86E-01	3.61E-02	2.49E-03	2.50E+04	2.50E+02	0.00%	0.01%	0.00%
carbon tetrachloride	1.64E+03	1	1.64E+03	1.00E+00	4.50E-03	4.21E-04	2.91E-05	7.38E+00	6.90E-01	4.77E-02	4.00E+03	6.00E+02	0.18%	0.12%	0.01%
1,1,2,2-Tetrachloroethane	4.48E+01	1	4.48E+01	1.00E+00	4.50E-03	4.21E-04	2.91E-05	2.02E-01	1.89E-02	1.30E-03	6.00E+02	3.50E+01	0.03%	0.05%	0.00%

CONCENTRATION (C)=(Q*X/Q)/RR (Ref. Eq. 5-6)

where:

Q = the source term (Ci)
RR =release rate- the RR is the amount of material suspended in air as a function of time.
X/Q =Site specific air dispersion factor (s/m3)

TABLE E-7 SOURCE TERM ANALYSIS FOR RH4-B LOC IN THE U/G FORKLIFT DROP OF WASTE CANISTER

CI (PE-Ci)	CD (containers)	MAR (PE-Ci)	DR	ARF	CF	CRF	NCF	Mit. LPF w/HEPA	Mit. Q w/HEPA (PE-Ci)	Unmit. Q w/o HEPA (PE-Ci)
Direct Load										
80	1	80	1.00E-02	1.00E-03	5.00E-02	1.00E-01	9.50E-01	1.00E-06	7.64E-10	7.64E-04
Double Containment										
240	1	240	1.00E-03	1.00E-03	5.00E-02	1.00E-01	9.50E-01	1.00E-06	2.29E-10	2.29E-04

Q = MAR*DR*ARF*RF*LPF

Q = (CI*CD)*DR*ARF*((CF*CRF) + (NCF))*LPF

where:

Mit.Q = the mitigated source term (*with* HEPA filtration)

Unmit. Q = the unmitigated source term (*without* HEPA filtration)

CD = # of containers involved

CI = the waste container inventory (PE-Ci)

MAR = Material at Risk = CD * CI

DR = Damage Ratio = The DR is that fraction of the MAR actually impacted by the accident condition.

ARF = Airborne Release Fraction-The fraction of radioactive material that is suspended in air.

CF = Combustible Fraction = Fraction of the waste that is combustible=1 for this analysis.

CRF = Combustible Respirable Fraction = The percentage of combustible material that is in the respirable size range

NCF = Noncombustible Fraction = Percentage of the MAR that is noncombustible.

Mit.LPF = Leakpath Factor = The cumulative fraction of airborne material that escapes to the atmosphere (i.e.,HEPA filtration; plateout)

Unmit. LPF = Unmitigated Leakpath Factor =(1 for this scenario and, therefore, not represented in the table)=The cumulative fraction of airborne material that that escapes to the atmosphere.

TABLE E-8 ON-SITE AND OFF-SITE CONSEQUENCE ANALYSIS FOR RH4-B LOC IN THE U/G FORKLIFT DROP OF WASTE CANISTER

	Q (PE-Ci)	On-Site (100 meters) X/Q (s/m3)	Exclusive Use Area X/Q (s/m3)	Site Boundary X/Q (s/m3)	BR (m3/s)	DCF (rem/Ci)	On-Site (100 meters) CEDE (rem)	Exclusive Use Area CEDE (rem)	Site Boundary CEDE (rem)
Mitigated									
Direct Load	7.64E-10	4.50E-03	4.21E-04	2.91E-05	3.33E-04	5.10E+08	5.84E-07	5.46E-08	3.78E-09
Double Containment	2.29E-10	4.50E-03	4.21E-04	2.91E-05	3.33E-04	5.10E+08	1.75E-07	1.64E-08	1.13E-09
Unmitigated									
Direct Load	7.64E-04	4.50E-03	4.21E-04	2.91E-05	3.33E-04	5.10E+08	5.84E-01	5.46E-02	3.78E-03
Double Containment	2.29E-04	4.50E-03	4.21E-04	2.91E-05	3.33E-04	5.10E+08	1.75E-01	1.64E-02	1.13E-03

Committed Effective Dose Equivalent (CEDE) = D = Q*X/Q*BR*DCF

where:

D = Radiological dose (Committed Effective Dose Equivalent (CEDE)) (rem)

Q = the source term (Ci)

X/Q = Site specific air dispersion factor (s/m3)

BR = C31Breathing rate (standard man) (m3/s) International Commission on Radiological Protection (ICRP) No. 23 (Light activity 20.0 liters/min or 3.33 E-04 m3/s)

DCF = Dose Conversion Factor (rem/Ci) Internal Dose Conversion Factors for Calculation of Dose to the Public

(Pu-239 Class W CEDE Inhalation 5.1E+02 rem/uCi or 5.10E+08 rem/Ci)

TABLE E-9 CHEMICAL SOURCE TERM/CONSEQUENCE ANALYSIS FOR RH4-B DROP OF WASTE CANISTER FROM FORKLIFT IN THE UNDERGROUND

Compound	MAR (mg/ canister)	CD (canister)	Q (drums) (mg)	RR (1/1 sec)	On-site (100 meters) X/Q(s/m3)	Exclusive Use Area X/Q (s/m3)	Site Boundary X/Q (s/m3)	On-site (100 meters) C (mg/m3)	Exclusive Use Area C (mg/m3)	Site Boundary C (mg/m3)	Limiting On-site Criteria (100 meter) (mg/m3)	Limiting Off-site Criteria (mg/m3)	Ratio (conc/limit) (100 meters)	Ratio (conc/limit) Exclusive Use Area	Ratio (conc/limit) Site Boundary
Canister															
methylene chloride*	8.88E+02	1	8.88E+02	1.00E+00	4.50E-03	4.21E-04	2.91E-05	4.00E+00	3.74E-01	2.58E-02					
chloroform	8.57E+01	1	8.57E+01	1.00E+00	4.50E-03	4.21E-04	2.91E-05	3.86E-01	3.61E-02	2.49E-03					
carbon tetrachloride*	1.64E+03	1	1.64E+03	1.00E+00	4.50E-03	4.21E-04	2.91E-05	7.38E+00	6.90E-01	4.77E-02					
1,1,2,2-Tetrachloroethane	4.48E+01	1	4.48E+01	1.00E+00	4.50E-03	4.21E-04	2.91E-05	2.02E-01	1.89E-02	1.30E-03					
											2.50E+03	6.00E+02	0.16%	0.06%	0.00%
											2.50E+02	1.00E+01	0.15%	0.36%	0.02%
											6.00E+02	1.25E+02	1.23%	0.55%	0.04%
											3.50E+01	2.00E+01	0.58%	0.09%	0.01%

C = (Q*X/Q)/RR

C =Concentration (mg/m3)
Q = Source Term (mg)
RR = Release Rate=The RR is the amount of material suspended in air as a function of time = 1/1 sec.G24:G25
X/Q =Dispersion Coefficient (mg)

TABLE E-10 SOURCE TERM ANALYSIS FOR RH5 FIRE FOLLOWED BY EXPLOSION IN THE UNDERGROUND (BDBA)

	CI (PE-Ci)	CD (damaged)	MAR (PE-Ci)	DR	ARF	CF	CRF	NCF	NCRF	Source Term (PE-Ci)	Mit. LPF w/HEPA	Unmit. LPF w/o HEPA	Mit. Q w/HEPA (PE-Ci)	Unmit. Q w/o HEPA (PE-Ci)
Direct Load	80	1	80	1.00E-02	1.00E-03	5.00E-02	1.00E-01	9.50E-01	1.00E+00	7.64E-04	1.00E-06	1.00E+00	7.64E-10	7.64E-04
Double Containment	240	1	240	1.00E-03	1.00E-03	5.00E-02	1.00E-01	9.50E-01	1.00E+00	2.29E-04	1.00E-06	1.00E+00	2.29E-10	2.29E-04

Q = MAR*DR*ARF*RF*LPF

Q=CD*CI*DR*ARF*((CF*CRF)+(NCF*NCRF))*LPF

where:

Q = the source term (Ci)

Mit.Q = the mitigated source term (*with* HEPA filtration)

Unmit. Q = the unmitigated source term (*without* HEPA filtration)

CD = # of containers damaged by drop or puncture

CI = the waste container inventory

MAR =(CD puncture + CD drop) * CI

DR = Damage Ratio = The DR is that fraction of the MAR actually impacted by the accident condition.

ARF = Airborne Release Fraction-The fraction of radioactive material that is suspended in air.

CF = Combustible Fraction = Percentage of MAR that is combustible.

CRF = Combustible Respirable Fraction = The percentage of combustible material that is in the respirable size range

NCF = Noncombustible Fraction = Percentage of the MAR that is noncombustible.

NCRF = Noncombustible Respirable Fraction = The percentage of noncombustible material that is in the respirable size range.

LPF =Leakpath Factor = the cumulative fraction of airborne material that escapes to the atmosphere from the postulated accident (i.e.,HEPA filtration; plateout)

TABLE E-11 CONSEQUENCE ANALYSIS FOR RH5 FIRE FOLLOWED BY EXPLOSION IN THE UNDERGROUND (BDBA)

	Q (PE-Ci)	On-Site (100 meters) X/Q (s/m3)	Exclusive Use Area X/Q (s/m3)	Site Boundary X/Q (s/m3)	BR (m3/s)	DCF (rem/Ci)	On-Site (100 meters) CEDE (rem)	Exclusive Use Area CEDE (rem)	Site Boundary CEDE (rem)
Mitigated									
Direct Load	7.64E-10	4.50E-03	4.21E-04	2.91E-05	3.33E-04	5.10E+08	5.84E-07	5.46E-08	3.78E-09
Double Containment	2.29E-10	4.50E-03	4.21E-04	2.91E-05	3.33E-04	5.10E+08	1.75E-07	1.64E-08	1.13E-09
Unmitigated									
Direct Load	7.64E-04	4.50E-03	4.21E-04	2.91E-05	3.33E-04	5.10E+08	5.84E-01	5.46E-02	3.78E-03
Double Containment	2.29E-04	4.50E-03	4.21E-04	2.91E-05	3.33E-04	5.10E+08	1.75E-01	1.64E-02	1.13E-03

Committed Effective Dose Equivalent (CEDE) = D = Q*X/Q*BR*DCF (Ref. Eq. 5-5)

where:

D = Radiological dose (Committed Effective Dose Equivalent (CEDE)) (rem)

Q = the source term (Ci)

X/Q = Site specific air dispersion factor (s/m3)

BR = C31Breathing rate (standard man) (m3/s) International Commission on Radiological Protection (ICRP) No. 23 (Light activity 20.0 liters/min or 3.33 E-04 m3/s)

DCF = Dose Conversion Factor (rem/Ci) Internal Dose Conversion Factors for Calculation of Dose to the Public

(Pu-239 Class W CEDE Inhalation 5.1E+02 rem/uCi or 5.1E+08 rem/Ci)

TABLE E-12 CHEMICAL SOURCE TERM/CONSEQUENCE ANALYSIS FOR RH5 FIRE FOLLOWED BY EXPLOSION IN THE UNDERGROUND (BDBA)

Compound	MAR (mg/ canister)	CD (canister)	Q (drums) (mg)	RR (sec)	On-site (100 m) X/Q(s/m3)	Exclusive Use Area X/Q (s/m3)	Site Boundary X/Q (s/m3)	On-site (100 meters) C (mg/m3)	Exclusive Use Area C (mg/m3)	Site Boundary C (mg/m3)	Limiting On-site Criteria (100 m) (mg/m3)	Limiting Off-site Criteria (mg/m3)	Ratio (conc/limit) (100 m)	Ratio (conc/limit) Exclusive Use Area	Ratio (conc/limit) Site Boundary
Canister															
methylene chloride*	8.88E + 02	1	8.88E+02	1.00E+00	4.50E-03	4.21E-04	2.91E-05	4.00E+00	3.74E-01	2.58E-02	1.25E+04	2.50E+03	0.03%	0.01%	0.00%
chloroform	8.57E + 01	1	8.57E+01	1.00E+00	4.50E-03	4.21E-04	2.91E-05	3.86E-01	3.61E-02	2.49E-03	2.50E+04	2.50E+02	0.00%	0.01%	0.00%
carbon tetrachloride*	1.64E + 03	1	1.64E+03	1.00E+00	4.50E-03	4.21E-04	2.91E-05	7.38E+00	6.90E-01	4.77E-02	4.00E+03	6.00E+02	0.18%	0.12%	0.01%
1,1,2,2-Tetrachloroethane	4.48E + 01	1	4.48E+01	1.00E+00	4.50E-03	4.21E-04	2.91E-05	2.02E-01	1.89E-02	1.30E-03	6.00E+02	3.50E+01	0.03%	0.05%	0.00%

C = (Q*X/Q)/RR

C =Concentration (mg/m3)
Q = Source Term (mg)
RR = Release Rate=The RR is the amount of material suspended in air as a function of time
X/Q =Dispersion Coefficient (mg)

TABLE E-13 IMMEDIATE WORKER CONSEQUENCE ANALYSIS FOR RH4-A LOC IN THE U/G (WASTE HOIST DROP)						
	Q (PE-Ci)	V (m3)	T (sec)	BR (m3/s)	DCF (rem/Ci)	CEDE (rem)
Waste Container						
Direct Load	1.91E-02	2.80E+01	1.00E+00	3.33E-04	5.10E+08	1.16E+02
Double Containment	5.73E-03	2.80E+01	1.00E+00	3.33E-04	5.10E+08	3.48E+01

D = (Q*T*BR*DCF)/V (Ref. Eq. 5-7)

where:

D = Radiological dose (Committed Effective Dose Equivalent (CEDE)) (rem)
Q = Radiological source term (Ci)
T = Exposure time in seconds (depends on the scenario)
BR = Breathing rate (standard man) (m3/s)
DCF = Dose conversion factor (rem/Ci)
V = Volume (m3) - Based on area at the Hoist Shaft

TABLE E-14 IMMEDIATE WORKER CONSEQUENCE ANALYSIS FOR RH4-B LOC IN THE U/G FORKLIFT DROP						
	Q (PE-Ci)	V (m3)	T (sec)	BR (m3/s)	DCF (rem/Ci)	CEDE (rem)
Waste Container						
Direct Load	7.64E-04	2.40E+01	1.00E+00	3.33E-04	5.10E+08	5.41E+00
Double Containment	2.29E-04	2.40E+01	1.00E+00	3.33E-04	5.10E+08	1.62E+00

D = (Q*T*BR*DCF)/V (Ref. Eq. 5-7)

where:

D = Radiological dose (Committed Effective Dose Equivalent (CEDE)) (rem)
Q = Radiological source term (Ci)
T = Exposure time in seconds (depends on the scenario)
BR = Breathing rate (standard man) (m3/s)
DCF = Dose conversion factor (rem/Ci)
V = Volume (m3) - Based on the area in the drift

TABLE E-15 IMMEDIATE WORKER CONSEQUENCE ANALYSIS FOR RH5 FIRE FOLLOWED BY EXPLOSION IN THE U/G (BDBA)						
	Q (PE-Ci)	V (m3)	T (sec)	BR (m3/s)	DCF (rem/Ci)	CEDE (rem)
Waste Container						
Direct Load	7.64E-04	2.40E+01	1.00E+00	3.33E-04	5.10E+08	5.41E+00
Double Containment	2.29E-04	2.40E+01	1.00E+00	3.33E-04	5.10E+08	1.62E+00

D = (Q*T*BR*DCF)/V (Ref. Eq. 5-7)

where:

D = Radiological dose (Committed Effective Dose Equivalent (CEDE)) (rem)
Q = Radiological source term (Ci)
T = Exposure time in seconds (depends on the scenario)
BR = Breathing rate (standard man) (m3/s)
DCF = Dose conversion factor (rem/Ci)
V = Volume of expanding cloud at time to reach receptor (m3) - Based on the area in the drift

TABLE E-16 IMMEDIATE WORKER CHEMICAL CONSEQUENCE ANALYSIS FOR RH4-A LOC IN THE U/G (WASTE HOIST DROP)

	MAR canister (mg)	CD (canister)	RR (1/1 sec)	Q (canister) (mg)	V (m3)	Canister C (mg/m3)	Limit (mg/m3)	Canister Ratio (Conc /limit)
methylene chloride	8.88E+02	1	1.00E+00	8.88E+02	2.80E+01	3.17E+01	1.25E+04	0.25%
chloroform	8.57E+01	1	1.00E+00	8.57E+01	2.80E+01	3.06E+00	2.50E+04	0.01%
carbon tetrachloride	1.64E+03	1	1.00E+00	1.64E+03	2.80E+01	5.85E+01	4.00E+03	1.46%
1,1,2,2-Tetrachloroethane	4.48E+01	1	1.00E+00	4.48E+01	2.80E+01	1.60E+00	6.00E+02	0.27%

C=(Q*T)/(RR*V) (Ref. Eq. 5-8)

where:

C = Concentration (mg/m3)
Q = Source Term (mg)
RR = Release Rate = The amount of material suspended in air as a function of time.
T = Time of exposure = 1 second for this scenario.
V = Volume (m3) - Based on the area of the Waste Hoist Shaft

TABLE E-17 IMMEDIATE WORKER CHEMICAL CONSEQUENCE ANALYSIS FOR RH4-B LOC IN THE U/G

	MAR canister (mg)	CD (canister)	RR (1/1 sec)	Q (canister) (mg)	V (m3)	Canister C (mg/m3)	Limit (mg/m3)	Canister Ratio (Conc /limit)
Chemical								
methylene chloride	8.88E+02	1	1.00E+00	8.88E+02	2.40E+01	3.70E+01	1.25E+04	0.30%
chloroform	8.57E+01	1	1.00E+00	8.57E+01	2.40E+01	3.57E+00	2.50E+04	0.01%
carbon tetrachloride	1.64E+03	1	1.00E+00	1.64E+03	2.40E+01	6.83E+01	4.00E+03	1.71%
1,1,2,2-Tetrachloroethane	4.48E+01	1	1.00E+00	4.48E+01	2.40E+01	1.87E+00	6.00E+02	0.31%

C=(Q*T)/(RR*V) (Ref. Eq. 5-8)

where:

C = Concentration (mg/m3)
Q = Source Term (mg)
RR = Release Rate = The amount of material suspended in air as a function of time.
T = Time of exposure = 1 second for this scenario.
V = Volume (m3) - Based on the area in the drift

TABLE E-18 SOURCE TERM ANALYSIS FOR NC1 FIRE IN THE HOT CELL

CD (damaged)	MAR (PE-Ci)	DR	CARF	CF	CRF	NCARF	NCF	NCRF	Source Term -Q (PE-Ci)	Mit. LPF w/HEPA	Unmit. LPF w/o HEPA	Mit. Q w/HEPA (PE-Ci)	Unmit. Q w/o HEPA (PE-Ci)
1	20	1.00E+00	5.00E-04	9.50E-01	1.00E+00	6.00E-03	5.00E-02	1.00E-02	9.56E-03	1.00E-06	1.00E+00	9.56E-09	9.56E-03

Q = MAR*DR*ARF*RF*LPF

Q=CD*CI*DR*((CARF*CF*CRF)+(NCARF*NCF*NCRF))*LPF

where:

Q = the source term (Ci)

Mit.Q = the mitigated source term (*with* HEPA filtration)

Unmit. Q = the unmitigated source term (*without* HEPA filtration)

CD = # of containers damaged by drop or puncture

CI = the waste container inventory

MAR =(CD puncture + CD drop) * CI

DR = Damage Ratio = The DR is that fraction of the MAR actually impacted by the accident condition.

CARF = Combustible Airborne Release Fraction-The fraction of combustible radioactive material that is suspended in air.

CF = Combustible Fraction = Percentage of MAR that is combustible.

CRF = Combustible Respirable Fraction = The percentage of combustible material that is in the respirable size range

NCF = Noncombustible Fraction = Percentage of the MAR that is noncombustible.

NCRF = Noncombustible Respirable Fraction = The percentage of noncombustible material that is in the respirable size range.

LPF =Leakpath Factor = the cumulative fraction of airborne material that escapes to the atmosphere from the postulated accident (i.e.,HEPA filtration; plateout)

TABLE E-19 CONSEQUENCE ANALYSIS FOR NC1 FIRE IN THE HOT CELL									
	Q (PE-Ci)	On-Site (100 meters) X/Q (s/m3)	Exclusive Use Area X/Q (s/m3)	Site Boundary X/Q (s/m3)	BR (m3/s)	DCF (rem/Ci)	On-Site (100 meters) CEDE (rem)	Exclusive Use Area CEDE (rem)	Site Boundary CEDE (rem)
Mitigated									
	9.56E-09	5.07E-03	4.00E-04	2.98E-05	3.33E-04	5.10E+08	8.23E-06	6.49E-07	4.84E-08
Unmitigated									
	9.56E-03	5.07E-03	4.00E-04	2.98E-05	3.33E-04	5.10E+08	8.23E+00	6.49E-01	4.84E-02

Committed Effective Dose Equivalent (CEDE) = D = Q*X/Q*BR*DCF (Ref. Eq. 5-5)

where:

D = Radiological dose (Committed Effective Dose Equivalent (CEDE)) (rem)

Q = the source term (Ci)

X/Q = Site specific air dispersion factor (s/m3)

BR = C31Breathing rate (standard man) (m3/s) International Commission on Radiological Protection (ICRP) No. 23 (Light activity 20.0 liters/min or 3.33 E-04 m3/s)

DCF = Dose Conversion Factor (rem/Ci) Internal Dose Conversion Factors for Calculation of Dose to the Public
(Pu-239 Class W CEDE Inhalation 5.1E+02 rem/uCi or 5.1E+08 rem/Ci)

TABLE E-20 CHEMICAL SOURCE TERM ANALYSIS FOR NC1 FIRE IN THE HOT CELL

Compound	CD (damaged)	MAR (mg)	DR	CARF	CF	CRF	NCF	NCRF	NCARF	LPF	Q(mg)
Chemical (Solid)											
Asbestos	1	2.98E+05	1.63E-01	5.00E-04	9.50E-01	1.00E+00	5.00E-02	1.00E-02	6.00E-03	1.00E+00	2.32E+01
Beryllium	1	2.31E+04	1.63E-01	5.00E-04	9.50E-01	1.00E+00	5.00E-02	1.00E-02	6.00E-03	1.00E+00	1.80E+00
Cadmium	1	3.31E+02	1.63E-01	5.00E-04	9.50E-01	1.00E+00	5.00E-02	1.00E-02	6.00E-03	1.00E+00	2.58E-02
Lead	1	9.15E+05	1.63E-01	5.00E-04	9.50E-01	1.00E+00	5.00E-02	1.00E-02	6.00E-03	1.00E+00	7.13E+01
Chemical (Liquid)											
Butyl Alcohol	1	3.31E+05	1.63E-01	5.00E-04	9.50E-01	1.00E+00	5.00E-02	1.00E-02	6.00E-03	1.00E+00	2.58E+01
Carbon Tetrachloride	1	6.94E+05	1.63E-01	5.00E-04	9.50E-01	1.00E+00	5.00E-02	1.00E-02	6.00E-03	1.00E+00	5.41E+01
Mercury	1	3.86E+05	1.63E-01	5.00E-04	9.50E-01	1.00E+00	5.00E-02	1.00E-02	6.00E-03	5.00E-01	1.50E+01
Methyl Alcohol	1	8.82E+02	1.63E-01	5.00E-04	9.50E-01	1.00E+00	5.00E-02	1.00E-02	6.00E-03	1.00E+00	6.87E-02
Methylene Chloride	1	4.41E+04	1.63E-01	5.00E-04	9.50E-01	1.00E+00	5.00E-02	1.00E-02	6.00E-03	1.00E+00	3.44E+00
Polychlorinated Biphenyl (PCB)	1	9.37E+05	1.63E-01	5.00E-04	9.50E-01	1.00E+00	5.00E-02	1.00E-02	6.00E-03	1.00E+00	7.30E+01
Trichloroethylene	1	4.30E+05	1.63E-01	5.00E-04	9.50E-01	1.00E+00	5.00E-02	1.00E-02	6.00E-03	1.00E+00	3.35E+01

Q = MAR*DR*ARF*RF

Q=CD*CI*DR*((CARF*CF*CRF)+(NCARF*NCF*NCRF))*LPF

Q = the source term (Ci)

CD = # of containers damaged by drop or puncture

CI = the waste container inventory

MAR =(CD puncture + CD drop) * CI

DR = Damage Ratio = The DR is that fraction of the MAR actually impacted by the accident condition.

CARF = Combustible Airborne Release Fraction-The fraction of combustible radioactive material that is suspended in air.

CF = Combustible Fraction = Percentage of MAR that is combustible.

CRF = Combustible Respirable Fraction = The percentage of combustible material that is in the respirable size range

NCF = Noncombustible Fraction = Percentage of the MAR that is noncombustible.

NCRF = Noncombustible Respirable Fraction = The percentage of noncombustible material that is in the respirable size range.

LPF =Leakpath Factor = the cumulative fraction of airborne material that escapes to the atmosphere from the postulated accident

NCARF = Noncombustible Airborne Release Fraction-The fraction of combustible radioactive material that is suspended in air.

TABLE E-21 CHEMICAL CONSEQUENCE ANALYSIS FOR NC1 FIRE IN THE HOT CELL

Compound	Q (mg)	LPF	RR (1/1 sec)	On-site (100 meters) C (mg/m3)	Exclusive Use Area C (mg/m3)	Site Boundary C (mg/m3)	Ratio conc/limit 100 meters	Ratio conc/limit Exclusive Use Area	Ratio conc/limit Site Boundary
Chemical (Solid)									
Asbestos	2.32E+01	1.00E+00	9.00E+02	1.01E-03	7.94E-05	5.91E-06	0.00%	0.01%	0.00%
Beryllium	1.80E+00	1.00E+00	9.00E+02	1.01E-05	8.00E-07	5.96E-08	0.01%	0.00%	0.00%
Cadmium	2.58E-02	1.00E+00	9.00E+02	1.45E-07	1.15E-08	8.54E-10	0.00%	0.00%	0.00%
Lead	7.13E+01	1.00E+00	9.00E+02	4.02E-04	3.17E-05	2.36E-06	0.00%	0.01%	0.00%
Chemical (Liquid)									
Butyl Alcohol	2.58E+01	1.00E+00	9.00E+02	1.45E-04	1.15E-05	8.54E-07	0.00%	0.00%	0.00%
Carbon Tetrachloride	5.41E+01	1.00E+00	9.00E+02	3.05E-04	2.40E-05	1.79E-06	0.00%	0.00%	0.00%
Mercury	1.50E+01	5.00E-01	9.00E+02	4.24E-05	3.34E-06	2.49E-07	0.00%	0.00%	0.00%
Methyl Alcohol	6.87E-02	1.00E+00	9.00E+02	3.87E-07	3.05E-08	2.28E-09	0.00%	0.00%	0.00%
Methylene Chloride	3.44E+00	1.00E+00	9.00E+02	1.94E-05	1.53E-06	1.14E-07	0.00%	0.00%	0.00%
Polychlorinated Biphenyl (PCB)	7.30E+01	1.00E+00	9.00E+02	4.11E-04	3.24E-05	2.42E-06	0.01%	0.00%	0.00%
Trichloroethylene	3.35E+01	1.00E+00	9.00E+02	1.89E-04	1.49E-05	1.11E-06	0.00%	0.00%	0.00%

C=(Q*LPF*X/Q)/RR (Ref. Eq. 5-6)

where:

Q'=Source Term

RR'=Release Rate-the amount of material suspended in air as a function of time

LPF"=Leak Path Factor

X/Q'=Site specific air dispersion factor (s/m3)

100 meter X/Q	=	5.07E-03
Exclusive Use Area X/Q	=	4.00E-04
Site Boundary X/Q	=	2.98E-05

Chemical	On Site Limit	Off Site Limit
Asbestos	5.00E+02	1.00E+00
Beryllium	1.00E-01	2.50E-02
Cadium	9.00E+00	4.00E+00
Lead	1.00E+02	2.50E-01
Butyl Alcohol	4.00E+03	1.50E+02
Carbon Tet	4.00E+03	6.00E+02
Mercury	4.10E+00	2.50E+00
Methyl Alcohol	6.00E+03	1.25E+03
Methylene Chloride	1.25E+04	2.50E+03
PCBs	5.00E+00	2.50E+00
Trichloroethylene	2.50E+04	2.50E+03

TABLE E-22 SOURCE TERM ANALYSIS FOR NC3-A LOC IN THE RH BAY AND HOT CELL (DROPPED OBJECT ON WASTE IN HOT CELL)

CI (PE-Ci)	CD (damaged)	MAR (PE-Ci)	DR	CARF	CF	CRF	NCARF	NCF	NCRF	Source Term (PE-Ci)	Mit. LPF w/HEPA	Unmit. LPF w/o HEPA	Mit. Q w/HEPA (PE-Ci)	Unmit. Q w/o HEPA (PE-Ci)
20	1	20	1.00E-01	1.00E-03	5.00E-02	1.00E-01	1.00E-03	9.50E-01	1.00E+00	1.91E-03	1.00E-06	1.00E+00	1.91E-09	1.91E-03

Q = MAR*DR*ARF*RF*LPF

Q=CD*CI*DR*((CARF*CF*CRF)+(NCARF*NCF*NCRF))*LPF

where:

Q = the source term (Ci)

Mit.Q = the mitigated source term (*with* HEPA filtration)

Unmit. Q = the unmitigated source term (*without* HEPA filtration)

CD = # of containers damaged by drop or puncture

CI = the waste container inventory

MAR =(CD puncture + CD drop) * CI

DR = Damage Ratio = The DR is that fraction of the MAR actually impacted by the accident condition.

CARF = Combustible Airborne Release Fraction-The fraction of combustible radioactive material that is suspended in air.

CF = Combustible Fraction = Percentage of MAR that is combustible.

CRF = Combustible Respirable Fraction = The percentage of combustible material that is in the respirable size range

NCF = Noncombustible Fraction = Percentage of the MAR that is noncombustible.

NCRF = Noncombustible Respirable Fraction = The percentage of noncombustible material that is in the respirable size range.

LPF =Leakpath Factor = the cumulative fraction of airborne material that escapes to the atmosphere from the postulated accident (i.e.,HEPA filtration; plateout)

NCARF = Noncombustible Airborne Release Fraction-The fraction of combustible radioactive material that is suspended in air.

TABLE E-23 CONSEQUENCE ANALYSIS FOR NC3-A LOC IN THE WHB (DROPPED OBJECT ON WASTE IN HOT CELL)									
	Q (PE-Ci)	On-Site (100 meters) X/Q (s/m3)	Exclusive Use Area X/Q (s/m3)	Site Boundary X/Q (s/m3)	BR (m3/s)	DCF (rem/Ci)	On-Site (100 meters) CEDE (rem)	Exclusive Use Area CEDE (rem)	Site Boundary CEDE (rem)
Mitigated									
	1.91E-09	5.07E-03	4.00E-04	2.98E-05	3.33E-04	5.10E+08	1.64E-06	1.30E-07	9.67E-09
Unmitigated									
	1.91E-03	5.07E-03	4.00E-04	2.98E-05	3.33E-04	5.10E+08	1.64E+00	1.30E-01	9.67E-03

Committed Effective Dose Equivalent (CEDE) = D = Q*X/Q*BR*DCF (Ref. Eq. 5-5)

where:

D = Radiological dose (Committed Effective Dose Equivalent (CEDE)) (rem)

Q = the source term (Ci)

X/Q = Site specific air dispersion factor (s/m3)

BR = C31Breathing rate (standard man) (m3/s) International Commission on Radiological Protection (ICRP) No. 23 (Light activity 20.0 liters/min or 3.33 E-04 m3/s)

DCF = Dose Conversion Factor (rem/Ci) Internal Dose Conversion Factors for Calculation of Dose to the Public (Pu-239 Class W CEDE Inhalation 5.1E+02 rem/uCi or 5.1E+08 rem/Ci)

TABLE E-24 VOC CHEMICAL SOURCE TERM ANALYSIS FOR NC3-A LOC IN THE WHB (DROPPED OBJECT ON WASTE IN HOT CELL)

Compound	CI (mg)	CD	MAR (mg)	DR	CF	CRF	CARF	NCF	NCRF	NCARF	Q (mg)
Chemical											
Methylene Chloride	2.03E+02	10	2.03E+03	1.00E+00	5.00E-02	1.00E+00	1.00E+00	9.50E-01	1.00E+00	1.00E+00	2.03E+03
Chloroform	1.96E+01	10	1.96E+02	1.00E+00	5.00E-02	1.00E+00	1.00E+00	9.50E-01	1.00E+00	1.00E+00	1.96E+02
1,1,2,2- Tetrachlorothane	1.03E+01	10	1.03E+02	1.00E+00	5.00E-02	1.00E+00	1.00E+00	9.50E-01	1.00E+00	1.00E+00	1.03E+02
Carbon Tetracholride	3.75E+02	10	3.75E+03	1.00E+00	5.00E-02	1.00E+00	1.00E+00	9.50E-01	1.00E+00	1.00E+00	3.75E+03

Q = MAR*DR*ARF*RF

Q = CD*CI*DR*((CARF*CF*CRF) + (NCF*NCRF*NCARF))

where:

Q = the source term (Ci)

CD = # of containers damaged by drop or puncture

CI = the waste container inventory

MAR = (CD puncture + CD drop) * CI

DR = Damage Ratio = The DR is that fraction of the MAR actually impacted by the accident condition.

CARF = Combustible Airborne Release Fraction-The fraction of combustible radioactive material that is suspended in air.

CF = Combustible Fraction = Percentage of MAR that is combustible.

CRF = Combustible Respirable Fraction = The percentage of combustible material that is in the respirable size range

NCF = Noncombustible Fraction = Percentage of the MAR that is noncombustible.

NCRF = Noncombustible Respirable Fraction = The percentage of noncombustible material that is in the respirable size range.

LPF =Leakpath Factor = the cumulative fraction of airborne material that escapes to the atmosphere from the postulated accident (i.e.,HEPA filtration; plateout)

NCARF = Noncombustible Airborne Release Fraction-The fraction of combustible radioactive material that is suspended in air.

TABLE E-25 VOC CHEMICAL CONSEQUENCE ANALYSIS FOR NC3-A LOC IN THE WHB (DROPPED OBJECT ON WASTE IN HOT CELL)

Compound	Q (mg)	LPF	RR (sec)	On-site (100 meters) X/Q (s/m3)	Exclusive Use Area X/Q (s/m3)	Site Boundary X/Q (s/m3)	On-site (100 meters) C (mg/m3)	Exculsive Use Area C (mg/m3)	Site Boundary C (mg/m3)	Limiting On-site Criteria (100 meter) (mg/m3)	Limiting Off-site Criteria (mg/m3)	Ratio (conc/limit) (100 meters)	Ratio (conc/limit) Exclusive Use Area	Ratio (conc/limit) Site Boundary
Chemical														
Methylene Chloride	2.03E+03	1.00E+00	1.00E+00	5.07E-03	4.00E-04	2.98E-05	1.03E+01	8.14E-01	6.06E-02	2.50E+03	6.00E+02	0.41%	0.14%	0.01%
Chloroform	1.96E+02	1.00E+00	1.00E+00	5.07E-03	4.00E-04	2.98E-05	9.96E-01	7.86E-02	5.85E-03	2.50E+02	1.00E+01	0.40%	0.79%	0.06%
1,1,2,2- Tetrachlorothane	1.03E+02	1.00E+00	1.00E+00	5.07E-03	4.00E-04	2.98E-05	5.20E-01	4.10E-02	3.06E-03	3.50E+01	2.00E+01	1.49%	0.21%	0.02%
Carbon Tetracholride	3.75E+03	1.00E+00	1.00E+00	5.07E-03	4.00E-04	2.98E-05	1.90E+01	1.50E+00	1.12E-01	6.00E+02	1.25E+02	3.17%	1.20%	0.09%

CONCENTRATION (C)=(Q*LPF*X/Q)/RR (Ref. Eq. 5-6)

where:

Q = Source Term
RR =Release rate- the RR is the amount of material suspended in air as a function of time.
X/Q =Site specific air dispersion factor (s/m3)
LPF =Leak Path Factor

TABLE E-26 SOURCE TERM ANALYSIS FOR NC3-B LOC IN THE WHB (DROPPED OBJECT ON WASTE OUTSIDE HOT CELL)

CD (damaged)	CI (PE-Ci)	DR	CARF	CF	CRF	NCARF	NCF	NCRF	Q (PE-Ci)	Mit. LPF w/HEPA	Unmit. LPF w/o HEPA	Mit. Q w/HEPA (PE-Ci)	Unmit. Q w/o HEPA (PE-Ci)
1	20	1.00E-01	1.00E-03	5.00E-02	1.00E-01	1.00E-03	9.50E-01	1.00E+00	1.91E-03	1.00E-06	1.00E+00	1.91E-09	1.91E-03

Q = MAR*DR*ARF*RF*LPF

Q=CD*CI*DR*((CARF*CF*CRF)+(NCARF*NCF*NCRF))*LPF

where:

Q = the source term (Ci)

Mit.Q = the mitigated source term (*with* HEPA filtration)

Unmit. Q = the unmitigated source term (*without* HEPA filtration)

CD = # of containers damaged by drop or puncture

CI = the waste container inventory

MAR =(CD puncture + CD drop) * CI

DR = Damage Ratio = The DR is that fraction of the MAR actually impacted by the accident condition.

CARF = Combustible Airborne Release Fraction-The fraction of combustible radioactive material that is suspended in air.

CF = Combustible Fraction = Percentage of MAR that is combustible.

CRF = Combustible Respirable Fraction = The percentage of combustible material that is in the respirable size range

NCF = Noncombustible Fraction = Percentage of the MAR that is noncombustible.

NCRF = Noncombustible Respirable Fraction = The percentage of noncombustible material that is in the respirable size range.

LPF =Leakpath Factor = the cumulative fraction of airborne material that escapes to the atmosphere from the postulated accident (i.e.,HEPA filtration; plateout)

NCARF = Noncombustible Airborne Release Fraction-The fraction of combustible radioactive material that is suspended in air.

TABLE E-27 CONSEQUENCE ANALYSIS FOR NC3-B LOC IN THE WHB (DROPPED OBJECT ON WASTE OUTSIDE HOT CELL)									
	Q (PE-Ci)	On-Site (100 meters) X/Q (s/m3)	Exclusive Use Area X/Q (s/m3)	Site Boundary X/Q (s/m3)	BR (m3/s)	DCF (rem/Ci)	On-Site (100 meters) CEDE (rem)	Exclusive Use Area CEDE (rem)	Site Boundary CEDE (rem)
Mitigated									
	1.91E-09	5.07E-03	4.00E-04	2.98E-05	3.33E-04	5.10E+08	1.64E-06	1.30E-07	9.67E-09
Unmitigated									
	1.91E-03	5.07E-03	4.00E-04	2.98E-05	3.33E-04	5.10E+08	1.64E+00	1.30E-01	9.67E-03

Committed Effective Dose Equivalent (CEDE) = D = Q*X/Q*BR*DCF (Ref. Eq. 5-5)

where:

D = Radiological dose (Committed Effective Dose Equivalent (CEDE)) (rem)
Q = the source term (Ci)
X/Q = Site specific air dispersion factor (s/m3)
BR = C31Breathing rate (standard man) (m3/s) International Commission on Radiological Protection (ICRP) No. 23 (Light activity 20.0 liters/min or 3.33 E-04 m3/s)
DCF = Dose Conversion Factor (rem/Ci) Internal Dose Conversion Factors for Calculation of Dose to the Public (Pu-239 Class W CEDE Inhalation 5.1E+02 rem/uCi or 5.1E+08 rem/Ci)

TABLE E-28 VOC CHEMICAL SOURCE TERM ANALYSIS FOR NC3-B LOC IN THE WHB (DROPPED OBJECT ON WASTE OUTSIDE HOT CELL)

Compound	CI (mg)	CD	MAR (mg)	DR	CF	CRF	CARF	NCF	NCRF	NCARF	Q (mg)
Chemical											
Methylene Chloride	2.03E+02	5	1.02E+03	1.00E+00	5.00E-02	1.00E+00	1.00E+00	9.50E-01	1.00E+00	1.00E+00	1.02E+03
Chloroform	1.96E+01	5	9.82E+01	1.00E+00	5.00E-02	1.00E+00	1.00E+00	9.50E-01	1.00E+00	1.00E+00	9.82E+01
1,1,2,2- Tetrachlorothane	1.03E+01	5	5.13E+01	1.00E+00	5.00E-02	1.00E+00	1.00E+00	9.50E-01	1.00E+00	1.00E+00	5.13E+01
Carbon Tetracholride	3.75E+02	5	1.88E+03	1.00E+00	5.00E-02	1.00E+00	1.00E+00	9.50E-01	1.00E+00	1.00E+00	1.88E+03

Q = MAR*DR*ARF*RF

Q = CD*CI*DR*((CARF*CF*CRF) + (NCF*NCRF*NCARF))

where:

Q = the source term (Ci)

CD = # of containers damaged by drop or puncture

CI = the waste container inventory

MAR = (CD puncture + CD drop) * CI

DR = Damage Ratio = The DR is that fraction of the MAR actually impacted by the accident condition.

CARF = Combustible Airborne Release Fraction-The fraction of combustible radioactive material that is suspended in air.

CF = Combustible Fraction = Percentage of MAR that is combustible.

CRF = Combustible Respirable Fraction = The percentage of combustible material that is in the respirable size range

NCF = Noncombustible Fraction = Percentage of the MAR that is noncombustible.

NCRF = Noncombustible Respirable Fraction = The percentage of noncombustible material that is in the respirable size range.

LPF =Leakpath Factor = the cumulative fraction of airborne material that escapes to the atmosphere from the postulated accident (i.e.,HEPA filtration; plateout)

NCARF = Noncombustible Airborne Release Fraction-The fraction of combustible radioactive material that is suspended in air.

TABLE E-29 VOC CHEMICAL CONSEQUENCE ANALYSIS FOR NC3-B LOC IN THE WHB (DROPPED OBJECT ON WASTE OUTSIDE HOT CELL)

Compound	Q (mg)	LPF	RR (sec)	On-site (100 meters) X/Q (s/m3)	Exclusive Use Area X/Q (s/m3)	Site Boundary X/Q (s/m3)	On-site (100 meters) C (mg/m3)	Exculsive Use Area C (mg/m3)	Site Boundary C (mg/m3)	Limiting On-site Criteria (100 meter) (mg/m3)	Limiting Off-site Criteria (mg/m3)	Ratio (conc/limit) (100 meters)	Ratio (conc/limit) Exclusive Use Area	Ratio (conc/limit) Site Boundary
Chemical														
Methylene Chloride	1.02E+03	1.00E+00	1.00E+00	5.07E-03	4.00E-04	2.98E-05	5.16E+00	4.07E-01	3.03E-02	2.50E+03	6.00E+02	0.21%	0.07%	0.01%
Chloroform	9.82E+01	1.00E+00	1.00E+00	5.07E-03	4.00E-04	2.98E-05	4.98E-01	3.93E-02	2.93E-03	2.50E+02	1.00E+01	0.20%	0.39%	0.03%
1,1,2,2- Tetrachlorothane	5.13E+01	1.00E+00	1.00E+00	5.07E-03	4.00E-04	2.98E-05	2.60E-01	2.05E-02	1.53E-03	3.50E+01	2.00E+01	0.74%	0.10%	0.01%
Carbon Tetracholride	1.88E+03	1.00E+00	1.00E+00	5.07E-03	4.00E-04	2.98E-05	9.52E+00	7.51E-01	5.59E-02	6.00E+02	1.25E+02	1.59%	0.60%	0.04%

CONCENTRATION (C)=(Q*LPF*X/Q)/RR (Ref. Eq. 5-6)

where:

Q = Source Term
RR =Release rate- the RR is the amount of material suspended in air as a function of time
X/Q =Site specific air dispersion factor (s/m3)
LPF =Leak Path Factor

TABLE E-30 RADIOLOGICAL SOURCE TERM FOR NC3-C LOC IN THE WHB (DROPPED DRUM OR CANISTER IN HOT CELL)

CD (damaged)	CI (PE-Ci)	DR	CARF	CF	CRF	NCARF	NCF	NCRF	Q (PE-Ci)	Mit. LPF w/HEPA	Unmit. LPF w/o HEPA	Mit. Q w/HEPA (PE-Ci)	Unmit. Q w/o HEPA (PE-Ci)
2	20	2.50E-02	1.00E-03	5.00E-02	1.00E-01	1.00E-03	9.50E-01	1.00E+00	9.55E-04	1.00E-06	1.00E+00	9.55E-10	9.55E-04

Q = MAR*DR*ARF*RF*LPF

Q=CD*CI*DR*((CARF*CF*CRF)+(NCARF*NCF*NCRF))*LPF

where:

Q = the source term (Ci)

Mit.Q = the mitigated source term (*with* HEPA filtration)

Unmit. Q = the unmitigated source term (*without* HEPA filtration)

CD = # of containers damaged by drop or puncture

CI = the waste container inventory

MAR =(CD puncture + CD drop) * CI

DR = Damage Ratio = The DR is that fraction of the MAR actually impacted by the accident condition.

CARF = Combustible Airborne Release Fraction-The fraction of combustible radioactive material that is suspended in air.

CF = Combustible Fraction = Percentage of MAR that is combustible.

CRF = Combustible Respirable Fraction = The percentage of combustible material that is in the respirable size range

NCF = Noncombustible Fraction = Percentage of the MAR that is noncombustible.

NCRF = Noncombustible Respirable Fraction = The percentage of noncombustible material that is in the respirable size range.

LPF =Leakpath Factor = the cumulative fraction of airborne material that escapes to the atmosphere from the postulated accident (i.e.,HEPA filtration; plateout)

NCARF = Noncombustible Airborne Release Fraction-The fraction of combustible radioactive material that is suspended in air.

TABLE E-31 RADIOLOGICAL CONSEQUENCE ANALYSIS FOR NC3-C LOC IN THE WHB (DROPPED DRUM OR CANISTER IN HOT CELL)

	Q (PE-Ci)	On-Site (100 meters) X/Q (s/m3)	Exclusive Use Area X/Q (s/m3)	Site Boundary X/Q (s/m3)	BR (m3/s)	DCF (rem/Ci)	On-Site (100 meters) CEDE (rem)	Exclusive Use Area CEDE (rem)	Site Boundary CEDE (rem)
Mitigated									
	9.55E-10	5.07E-03	4.00E-04	2.98E-05	3.33E-04	5.10E+08	8.22E-07	6.49E-08	4.83E-09
Unmitigated									
	9.55E-04	5.07E-03	4.00E-04	2.98E-05	3.33E-04	5.10E+08	8.22E-01	6.49E-02	4.83E-03

Committed Effective Dose Equivalent (CEDE) = D = Q*X/Q*BR*DCF (Ref. Eq. 5-5)

where:

D = Radiological dose (Committed Effective Dose Equivalent (CEDE)) (rem)

Q = the source term (Ci)

X/Q = Site specific air dispersion factor (s/m3)

BR = C31Breathing rate (standard man) (m3/s) International Commission on Radiological Protection (ICRP) No. 23 (Light activity 20.0 liters/min or 3.33 E-04 m3/s)

DCF = Dose Conversion Factor (rem/Ci) Internal Dose Conversion Factors for Calculation of Dose to the Public (Pu-239 Class W CEDE Inhalation 5.1E+02 rem/uCi or 5.1E+08 rem/Ci)

TABLE E-32 VOC CHEMICAL SOURCE TERM ANALYSIS FOR NC3-C LOC IN THE WHB (DROPPED DRUM OR CANISTER IN HOT CELL)

Compound	CI (mg)	CD	MAR (mg)	DR	CF	CRF	CARF	NCF	NCRF	NCARF	Q (mg)
Chemical											
Methylene Chloride	2.03E+02	2	4.07E+02	1.00E+00	5.00E-02	1.00E+00	1.00E+00	9.50E-01	1.00E+00	1.00E+00	4.07E+02
Chloroform	1.96E+01	2	3.93E+01	1.00E+00	5.00E-02	1.00E+00	1.00E+00	9.50E-01	1.00E+00	1.00E+00	3.93E+01
1,1,2,2- Tetrachlorothane	1.03E+01	2	2.05E+01	1.00E+00	5.00E-02	1.00E+00	1.00E+00	9.50E-01	1.00E+00	1.00E+00	2.05E+01
Carbon Tetracholride	3.75E+02	2	7.51E+02	1.00E+00	5.00E-02	1.00E+00	1.00E+00	9.50E-01	1.00E+00	1.00E+00	7.51E+02

Q = MAR*DR*ARF*RF

Q = CD*CI*DR*((CARF*CF*CRF) + (NCF*NCRF*NCARF))

where:

Q = the source term (Ci)

CD = # of containers damaged by drop or puncture

CI = the waste container inventory

MAR = (CD puncture + CD drop) * CI

DR = Damage Ratio = The DR is that fraction of the MAR actually impacted by the accident condition.

CARF = Combustible Airborne Release Fraction-The fraction of combustible radioactive material that is suspended in air.

CF = Combustible Fraction = Percentage of MAR that is combustible.

CRF = Combustible Respirable Fraction = The percentage of combustible material that is in the respirable size range

NCF = Noncombustible Fraction = Percentage of the MAR that is noncombustible.

NCRF = Noncombustible Respirable Fraction = The percentage of noncombustible material that is in the respirable size range.

LPF = Leakpath Factor = the cumulative fraction of airborne material that escapes to the atmosphere from the postulated accident (i.e.,HEPA filtration; plateout)

NCARF = Noncombustible Airborne Release Fraction-The fraction of combustible radioactive material that is suspended in air.

TABLE E-33 VOC CHEMICAL CONSEQUENCE ANALYSIS FOR NC3-C LOC IN THE WHB (DROPPED DRUM OR CANISTER IN HOT CELL)

Compound	Q (mg)	LPF	RR (sec)	On-site (100 meters) X/Q (s/m3)	Exclusive Use Area X/Q (s/m3)	Site Boundary X/Q (s/m3)	On-site (100 meters) C (mg/m3)	Exculsive Use Area C (mg/m3)	Site Boundary C (mg/m3)	Limiting On-site Criteria (100 meter) (mg/m3)	Limiting Off-site Criteria (mg/m3)	Ratio (conc/limit) (100 meters)	Ratio (conc/limit) Exclusive Use Area	Ratio (conc/limit) Site Boundary
Chemical														
Methylene Chloride	4.07E+02	1.00E+00	1.00E+00	5.07E-03	4.00E-04	2.98E-05	2.06E+00	1.63E-01	1.21E-02	2.50E+03	6.00E+02	0.08%	0.03%	0.00%
Chloroform	3.93E+01	1.00E+00	1.00E+00	5.07E-03	4.00E-04	2.98E-05	1.99E-01	1.57E-02	1.17E-03	2.50E+02	1.00E+01	0.08%	0.16%	0.01%
1,1,2,2- Tetrachlorothane	2.05E+01	1.00E+00	1.00E+00	5.07E-03	4.00E-04	2.98E-05	1.04E-01	8.21E-03	6.12E-04	3.50E+01	2.00E+01	0.30%	0.04%	0.00%
Carbon Tetracholride	7.51E+02	1.00E+00	1.00E+00	5.07E-03	4.00E-04	2.98E-05	3.81E+00	3.00E-01	2.24E-02	6.00E+02	1.25E+02	0.63%	0.24%	0.02%

CONCENTRATION (C)=(Q*LPF*X/Q)/RR (Ref. Eq. 5-6)

where:

Q = Source Term
RR =release rate- the RR is the amount of material suspended in air as a function of time.
X/Q =Site specific air dispersion factor (s/m3)
LPF =Leak Path Factor

TABLE E-34 RADIOLOGICAL SOURCE TERM FOR NC3-D LOC IN THE WHB (DROPPED DRUM OR CANISTER OUTSIDE HOT CELL)

CD (damaged)	CI (PE-Ci)	DR	CARF	CF	CRF	NCARF	NCF	NCRF	Q (PE-Ci)	Mit. LPF w/HEPA	Unmit. LPF w/o HEPA	Mit. Q w/HEPA (PE-Ci)	Unmit. Q w/o HEPA (PE-Ci)
1	20	2.50E-02	1.00E-03	5.00E-02	1.00E-01	1.00E-03	9.50E-01	1.00E+00	4.78E-04	1.00E-06	1.00E+00	4.78E-10	4.78E-04

Q = MAR*DR*ARF*RF*LPF

Q=CD*CI*DR*((CARF*CF*CRF)+(NCARF*NCF*NCRF))*LPF

where:

Q = the source term (Ci)

Mit.Q = the mitigated source term (*with* HEPA filtration)

Unmit. Q = the unmitigated source term (*without* HEPA filtration)

CD = # of containers damaged by drop or puncture

CI = the waste container inventory

MAR =(CD puncture + CD drop) * CI

DR = Damage Ratio = The DR is that fraction of the MAR actually impacted by the accident condition.

CARF = Combustible Airborne Release Fraction-The fraction of combustible radioactive material that is suspended in air.

CF = Combustible Fraction = Percentage of MAR that is combustible.

CRF = Combustible Respirable Fraction = The percentage of combustible material that is in the respirable size range

NCF = Noncombustible Fraction = Percentage of the MAR that is noncombustible.

NCRF = Noncombustible Respirable Fraction = The percentage of noncombustible material that is in the respirable size range.

LPF =Leakpath Factor = the cumulative fraction of airborne material that escapes to the atmosphere from the postulated accident (i.e.,HEPA filtration; plateout)

NCARF = Noncombustible Airborne Release Fraction-The fraction of combustible radioactive material that is suspended in air.

TABLE E-35 RADIOLOGICAL CONSEQUENCE ANALYSIS FOR NC3-D LOC IN THE WHB (DROPPED DRUM OR CANISTER OUTSIDE HOT CELL)

	Q (PE-Ci)	On-Site (100 meters) X/Q (s/m3)	Exclusive Use Area X/Q (s/m3)	Site Boundary X/Q (s/m3)	BR (m3/s)	DCF (rem/Ci)	On-Site (100 meters) CEDE (rem)	Exclusive Use Area CEDE (rem)	Site Boundary CEDE (rem)
Mitigated									
	4.78E-10	5.07E-03	4.00E-04	2.98E-05	3.33E-04	5.10E+08	4.11E-07	3.24E-08	2.42E-09
Unmitigated									
	4.78E-04	5.07E-03	4.00E-04	2.98E-05	3.33E-04	5.10E+08	4.11E-01	3.24E-02	2.42E-03

Committed Effective Dose Equivalent (CEDE) = D = Q*X/Q*BR*DCF (Ref. Eq. 5-5)

where:

D = Radiological dose (Committed Effective Dose Equivalent (CEDE)) (rem)

Q = the source term (Ci)

X/Q = Site specific air dispersion factor (s/m3)

BR = C31Breathing rate (standard man) (m3/s) International Commission on Radiological Protection (ICRP) No. 23 (Light activity 20.0 liters/min or 3.33 E-04 m3/s)

DCF = Dose Conversion Factor (rem/Ci) Internal Dose Conversion Factors for Calculation of Dose to the Public (Pu-239 Class W CEDE Inhalation 5.1E+02 rem/uCi or 5.1E+08 rem/Ci)

TABLE E-37 VOC CHEMICAL SOURCE TERM ANALYSIS FOR NC3-D LOC IN THE WHB (DROPPED DRUM OR CANISTER OUTSIDE HOT CELL)

Compound	CI (mg)	CD	MAR (mg)	DR	CF	CRF	CARF	NCF	NCRF	NCARF	Q (mg)
Chemical											
Methylene Chloride	2.03E+02	10	2.03E+03	1.00E+00	5.00E-02	1.00E+00	1.00E+00	9.50E-01	1.00E+00	1.00E+00	2.03E+03
Chloroform	1.96E+01	10	1.96E+02	1.00E+00	5.00E-02	1.00E+00	1.00E+00	9.50E-01	1.00E+00	1.00E+00	1.96E+02
1,1,2,2- Tetrachlorothane	1.03E+01	10	1.03E+02	1.00E+00	5.00E-02	1.00E+00	1.00E+00	9.50E-01	1.00E+00	1.00E+00	1.03E+02
Carbon Tetracholride	3.75E+02	10	3.75E+03	1.00E+00	5.00E-02	1.00E+00	1.00E+00	9.50E-01	1.00E+00	1.00E+00	3.75E+03

Q = MAR*DR*ARF*RF

Q = CD*CI*DR*((CARF*CF*CRF) + (NCF*NCRF*NCARF))

where:

Q = the source term (Ci)

CD = # of containers damaged by drop or puncture

CI = the waste container inventory

MAR = (CD puncture + CD drop) * CI

DR = Damage Ratio = The DR is that fraction of the MAR actually impacted by the accident condition.

CARF = Combustible Airborne Release Fraction-The fraction of combustible radioactive material that is suspended in air.

CF = Combustible Fraction = Percentage of MAR that is combustible.

CRF = Combustible Respirable Fraction = The percentage of combustible material that is in the respirable size range

NCF = Noncombustible Fraction = Percentage of the MAR that is noncombustible.

NCRF = Noncombustible Respirable Fraction = The percentage of noncombustible material that is in the respirable size range.

LPF = Leakpath Factor = the cumulative fraction of airborne material that escapes to the atmosphere from the postulated accident (i.e.,HEPA filtration; plateout)

NCARF = Noncombustible Airborne Release Fraction-The fraction of combustible radioactive material that is suspended in air.

TABLE E-37 VOC CHEMICAL CONSEQUENCE ANALYSIS FOR NC3-D LOC IN THE WHB (DROPPED DRUM OR CANISTER OUTSIDE HOT CELL)

Compound	Q (mg)	LPF	RR (sec)	On-site (100 meters) X/Q (s/m3)	Exclusive Use Area X/Q (s/m3)	Site Boundary X/Q (s/m3)	On-site (100 meters) C (mg/m3)	Exculsive Use Area C (mg/m3)	Site Boundary C (mg/m3)	Limiting On-site Criteria (100 meter) (mg/m3)	Limiting Off-site Criteria (mg/m3)	Ratio (conc/limit) (100 meters)	Ratio (conc/limit) Exclusive Use Area	Ratio (conc/limit) Site Boundary
Chemical														
Methylene Chloride	2.03E+03	1.00E+00	1.00E+00	5.07E-03	4.00E-04	2.98E-05	1.03E+01	8.14E-01	6.06E-02	2.50E+03	6.00E+02	0.41%	0.14%	0.01%
Chloroform	1.96E+02	1.00E+00	1.00E+00	5.07E-03	4.00E-04	2.98E-05	9.96E-01	7.86E-02	5.85E-03	2.50E+02	1.00E+01	0.40%	0.79%	0.06%
1,1,2,2- Tetrachlorothane	1.03E+02	1.00E+00	1.00E+00	5.07E-03	4.00E-04	2.98E-05	5.20E-01	4.10E-02	3.06E-03	3.50E+01	2.00E+01	1.49%	0.21%	0.02%
Carbon Tetracholride	3.75E+03	1.00E+00	1.00E+00	5.07E-03	4.00E-04	2.98E-05	1.90E+01	1.50E+00	1.12E-01	6.00E+02	1.25E+02	3.17%	1.20%	0.09%

CONCENTRATION (C)=(Q*LPF*X/Q)/RR (Ref. Eq. 5-6)

where:

Q = Source Term
RR =Release rate- the RR is the amount of material suspended in air as a function of time.
X/Q =Site specific air dispersion factor (s/m3)
LPF =Leak Path Factor

TABLE E-38 RADIOLOGICAL SOURCE TERM FOR NC3-E LOC IN THE WHB (PUNCURE DRUM IN HOT CELL)

CD (damaged)	CI (PE-Ci)	DR	CARF	CF	CRF	NCARF	NCF	NCRF	Q (PE-Ci)	Mit. LPF w/HEPA	Unmit. LPF w/o HEPA	Mit. Q w/HEPA (PE-Ci)	Unmit. Q w/o HEPA (PE-Ci)
1	20	5.00E-02	1.00E-03	5.00E-02	1.00E-01	1.00E-03	9.50E-01	1.00E+00	9.55E-04	1.00E-06	1.00E+00	9.55E-10	9.55E-04

Q = MAR*DR*ARF*RF*LPF

Q=CD*CI*DR*((CARF*CF*CRF)+(NCARF*NCF*NCRF))*LPF

where:

Q = the source term (Ci)

Mit.Q = the mitigated source term (*with* HEPA filtration)

Unmit. Q = the unmitigated source term (*without* HEPA filtration)

CD = # of containers damaged by drop or puncture

CI = the waste container inventory

MAR =(CD puncture + CD drop) * CI

DR = Damage Ratio = The DR is that fraction of the MAR actually impacted by the accident condition.

CARF = Combustible Airborne Release Fraction-The fraction of combustible radioactive material that is suspended in air.

CF = Combustible Fraction = Percentage of MAR that is combustible.

CRF = Combustible Respirable Fraction = The percentage of combustible material that is in the respirable size range

NCF = Noncombustible Fraction = Percentage of the MAR that is noncombustible.

NCRF = Noncombustible Respirable Fraction = The percentage of noncombustible material that is in the respirable size range.

LPF =Leakpath Factor = the cumulative fraction of airborne material that escapes to the atmosphere from the postulated accident (i.e.,HEPA filtration; plateout)

NCARF = Noncombustible Airborne Release Fraction-The fraction of combustible radioactive material that is suspended in air.

TABLE E-39 RADIOLOGICAL CONSEQUENCE ANALYSIS FOR NC3-E LOC IN THE WHB (PUNCURE DRUM IN HOT CELL)									
	Q (PE-Ci)	On-Site (100 meters) X/Q (s/m3)	Exclusive Use Area X/Q (s/m3)	Site Boundary X/Q (s/m3)	BR (m3/s)	DCF (rem/Ci)	On-Site (100 meters) CEDE (rem)	Exclusive Use Area CEDE (rem)	Site Boundary CEDE (rem)
Mitigated									
	9.55E-10	5.07E-03	4.00E-04	2.98E-05	3.33E-04	5.10E+08	8.22E-07	6.49E-08	4.83E-09
Unmitigated									
	9.55E-04	5.07E-03	4.00E-04	2.98E-05	3.33E-04	5.10E+08	8.22E-01	6.49E-02	4.83E-03

Committed Effective Dose Equivalent (CEDE) = D = Q*X/Q*BR*DCF (Ref. Eq. 5-5)

where:

D = Radiological dose (Committed Effective Dose Equivalent (CEDE)) (rem)

Q = the source term (Ci)

X/Q = Site specific air dispersion factor (s/m3)

BR = C31Breathing rate (standard man) (m3/s) International Commission on Radiological Protection (ICRP) No. 23 (Light activity 20.0 liters/min or 3.33 E-04 m3/s)

DCF = Dose Conversion Factor (rem/Ci) Internal Dose Conversion Factors for Calculation of Dose to the Public (Pu-239 Class W CEDE Inhalation 5.1E+02 rem/uCi or 5.1E+08 rem/Ci)

TABLE E-40 VOC CHEMICAL SOURCE TERM ANALYSIS FOR NC3-E LOC IN THE WHB (PUNCURE DRUM IN HOT CELL)											
Compound	CI (mg)	CD	MAR (mg)	DR	CF	CRF	CARF	NCF	NCRF	NCARF	Q (mg)
Chemical											
Methylene Chloride	2.03E+02	1	2.03E+02	1.00E+00	5.00E-02	1.00E+00	1.00E+00	9.50E-01	1.00E+00	1.00E+00	2.03E+02
Chloroform	1.96E+01	1	1.96E+01	1.00E+00	5.00E-02	1.00E+00	1.00E+00	9.50E-01	1.00E+00	1.00E+00	1.96E+01
1,1,2,2- Tetrachlorothane	1.03E+01	1	1.03E+01	1.00E+00	5.00E-02	1.00E+00	1.00E+00	9.50E-01	1.00E+00	1.00E+00	1.03E+01
Carbon Tetracholride	3.75E+02	1	3.75E+02	1.00E+00	5.00E-02	1.00E+00	1.00E+00	9.50E-01	1.00E+00	1.00E+00	3.75E+02

Q = MAR*DR*ARF*RF

Q = CD*CI*DR*((CARF*CF*CRF) + (NCF*NCRF*NCARF))

where:

Q = the source term (Ci)

CD = # of containers damaged by drop or puncture

CI = the waste container inventory

MAR = (CD puncture + CD drop) * CI

DR = Damage Ratio = The DR is that fraction of the MAR actually impacted by the accident condition.

CARF = Combustible Airborne Release Fraction-The fraction of combustible radioactive material that is suspended in air.

CF = Combustible Fraction = Percentage of MAR that is combustible.

CRF = Combustible Respirable Fraction = The percentage of combustible material that is in the respirable size range

NCF = Noncombustible Fraction = Percentage of the MAR that is noncombustible.

NCRF = Noncombustible Respirable Fraction = The percentage of noncombustible material that is in the respirable size range.

LPF = Leakpath Factor = the cumulative fraction of airborne material that escapes to the atmosphere from the postulated accident (i.e.,HEPA filtration; plateout)

NCARF = Noncombustible Airborne Release Fraction-The fraction of combustible radioactive material that is suspended in air.

TABLE E-41 VOC CHEMICAL CONSEQUENCE ANALYSIS FOR NC3-E LOC IN THE WHB (PUNCURE DRUM IN HOT CELL)

Compound	Q (mg)	LPF	RR (sec)	On-site (100 meters) X/Q (s/m3)	Exclusive Use Area X/Q (s/m3)	Site Boundary X/Q (s/m3)	On-site (100 meters) C (mg/m3)	Exculsive Use Area C (mg/m3)	Site Boundary C (mg/m3)	Limiting On-site Criteria (100 meter) (mg/m3)	Limiting Off-site Criteria (mg/m3)	Ratio (conc/limit) (100 meters)	Ratio (conc/limit) Exclusive Use Area	Ratio (conc/limit) Site Boundary
Chemical														
Methylene Chloride	2.03E+02	1.00E+00	1.00E+00	5.07E-03	4.00E-04	2.98E-05	1.03E+00	8.14E-02	6.06E-03	2.50E+03	6.00E+02	0.04%	0.01%	0.00%
Chloroform	1.96E+01	1.00E+00	1.00E+00	5.07E-03	4.00E-04	2.98E-05	9.96E-02	7.86E-03	5.85E-04	2.50E+02	1.00E+01	0.04%	0.08%	0.01%
1,1,2,2- Tetrachlorothane	1.03E+01	1.00E+00	1.00E+00	5.07E-03	4.00E-04	2.98E-05	5.20E-02	4.10E-03	3.06E-04	3.50E+01	2.00E+01	0.15%	0.02%	0.00%
Carbon Tetracholride	3.75E+02	1.00E+00	1.00E+00	5.07E-03	4.00E-04	2.98E-05	1.90E+00	1.50E-01	1.12E-02	6.00E+02	1.25E+02	0.32%	0.12%	0.01%

CONCENTRATION (C)=(Q*LPF*X/Q)/RR (Ref. Eq. 5-6)

where:

Q = Source Term
RR =release rate- the RR is the amount of material suspended in air as a function of time.
X/Q =Site specific air dispersion factor (s/m3)
LPF =Leak Path Factor

TABLE E-42 RADIOLOGICAL SOURCE TERM FOR NC3-F LOC IN THE WHB (PUNCURE DRUM OR CANISTER OUTSIDE HOT CELL)

CD (damaged)	CI (PE-Ci)	DR	CARF	CF	CRF	NCARF	NCF	NCRF	Q (PE-Ci)	Mit. LPF w/HEPA	Unmit. LPF w/o HEPA	Mit. Q w/HEPA (PE-Ci)	Unmit. Q w/o HEPA (PE-Ci)
3	20	5.00E-02	1.00E-03	5.00E-02	1.00E-01	1.00E-03	9.50E-01	1.00E+00	2.87E-03	1.00E-06	1.00E+00	2.87E-09	2.87E-03

Q = MAR*DR*ARF*RF*LPF

Q=CD*CI*DR*((CARF*CF*CRF)+(NCARF*NCF*NCRF))*LPF

where:

Q = the source term (Ci)

Mit.Q = the mitigated source term (*with* HEPA filtration)

Unmit. Q = the unmitigated source term (*without* HEPA filtration)

CD = # of containers damaged by drop or puncture

CI = the waste container inventory

MAR =(CD puncture + CD drop) * CI

DR = Damage Ratio = The DR is that fraction of the MAR actually impacted by the accident condition.

CARF = Combustible Airborne Release Fraction-The fraction of combustible radioactive material that is suspended in air.

CF = Combustible Fraction = Percentage of MAR that is combustible.

CRF = Combustible Respirable Fraction = The percentage of combustible material that is in the respirable size range

NCF = Noncombustible Fraction = Percentage of the MAR that is noncombustible.

NCRF = Noncombustible Respirable Fraction = The percentage of noncombustible material that is in the respirable size range.

LPF =Leakpath Factor = the cumulative fraction of airborne material that escapes to the atmosphere from the postulated accident (i.e.,HEPA filtration; plateout)

NCARF = Noncombustible Airborne Release Fraction-The fraction of combustible radioactive material that is suspended in air.

TABLE E-43 RADIOLOGICAL CONSEQUENCE ANALYSIS FOR NC3-F LOC IN THE WHB (PUNCURE DRUM OR CANISTER OUTSIDE HOT CELL)									
	Q (PE-Ci)	On-Site (100 meters) X/Q (s/m3)	Exclusive Use Area X/Q (s/m3)	Site Boundary X/Q (s/m3)	BR (m3/s)	DCF (rem/Ci)	On-Site (100 meters) CEDE (rem)	Exclusive Use Area CEDE (rem)	Site Boundary CEDE (rem)
Mitigated									
	2.87E-09	5.07E-03	4.00E-04	2.98E-05	3.33E-04	5.10E+08	2.47E-06	1.95E-07	1.45E-08
Unmitigated									
	2.87E-03	5.07E-03	4.00E-04	2.98E-05	3.33E-04	5.10E+08	2.47E+00	1.95E-01	1.45E-02

Committed Effective Dose Equivalent (CEDE) = D = Q*X/Q*BR*DCF (Ref. Eq. 5-5)

where:

D = Radiological dose (Committed Effective Dose Equivalent (CEDE)) (rem)

Q = the source term (Ci)

X/Q = Site specific air dispersion factor (s/m3)

BR = C31Breathing rate (standard man) (m3/s) International Commission on Radiological Protection (ICRP) No. 23 (Light activity 20.0 liters/min or 3.33 E-04 m3/s)

DCF = Dose Conversion Factor (rem/Ci) Internal Dose Conversion Factors for Calculation of Dose to the Public (Pu-239 Class W CEDE Inhalation 5.1E+02 rem/uCi or 5.1E+08 rem/Ci)

TABLE E-44 VOC CHEMICAL SOURCE TERM ANALYSIS FOR NC3-F LOC IN THE WHB (PUNCTURE DRUM OR CANISTER OUTSIDE HOT CELL)

Compound	CI (mg)	CD	MAR (mg)	DR	CF	CRF	CARF	NCF	NCRF	NCARF	Q (mg)
Chemical											
Methylene Chloride	2.03E+02	3	6.10E+02	1.00E+00	5.00E-02	1.00E+00	1.00E+00	9.50E-01	1.00E+00	1.00E+00	6.10E+02
Chloroform	1.96E+01	3	5.89E+01	1.00E+00	5.00E-02	1.00E+00	1.00E+00	9.50E-01	1.00E+00	1.00E+00	5.89E+01
1,1,2,2- Tetrachlorothane	1.03E+01	3	3.08E+01	1.00E+00	5.00E-02	1.00E+00	1.00E+00	9.50E-01	1.00E+00	1.00E+00	3.08E+01
Carbon Tetracholride	3.75E+02	3	1.13E+03	1.00E+00	5.00E-02	1.00E+00	1.00E+00	9.50E-01	1.00E+00	1.00E+00	1.13E+03

Q = MAR*DR*ARF*RF

Q = CD*CI*DR*((CARF*CF*CRF) + (NCF*NCRF*NCARF))

where:

Q = the source term (Ci)

CD = # of containers damaged by drop or puncture

CI = the waste container inventory

MAR = (CD puncture + CD drop) * CI

DR = Damage Ratio = The DR is that fraction of the MAR actually impacted by the accident condition.

CARF = Combustible Airborne Release Fraction-The fraction of combustible radioactive material that is suspended in air.

CF = Combustible Fraction = Percentage of MAR that is combustible.

CRF = Combustible Respirable Fraction = The percentage of combustible material that is in the respirable size range

NCF = Noncombustible Fraction = Percentage of the MAR that is noncombustible.

NCRF = Noncombustible Respirable Fraction = The percentage of noncombustible material that is in the respirable size range.

LPF = Leakpath Factor = the cumulative fraction of airborne material that escapes to the atmosphere from the postulated accident (i.e.,HEPA filtration; plateout)

NCARF = Noncombustible Airborne Release Fraction-The fraction of combustible radioactive material that is suspended in air.

TABLE E-45 VOC CHEMICAL CONSEQUENCE ANALYSIS FOR NC3-F LOC IN THE WHB (PUNCURE DRUM OR CANISTER OUTSIDE HOT CELL)

Compound	Q (mg)	LPF	RR (sec)	On-site (100 meters) X/Q (s/m3)	Exclusive Use Area X/Q (s/m3)	Site Boundary X/Q (s/m3)	On-site (100 meters) C (mg/m3)	Exculsive Use Area C (mg/m3)	Site Boundary C (mg/m3)	Limiting On-site Criteria (100 meter) (mg/m3)	Limiting Off-site Criteria (mg/m3)	Ratio (conc/limit) (100 meters)	Ratio (conc/limit) Exclusive Use Area	Ratio (conc/limit) Site Boundary
Chemical														
Methylene Chloride	6.10E+02	1.00E+00	1.00E+00	5.07E-03	4.00E-04	2.98E-05	3.09E+00	2.44E-01	1.82E-02	2.50E+03	6.00E+02	0.12%	0.04%	0.00%
Chloroform	5.89E+01	1.00E+00	1.00E+00	5.07E-03	4.00E-04	2.98E-05	2.99E-01	2.36E-02	1.76E-03	2.50E+02	1.00E+01	0.12%	0.24%	0.02%
1,1,2,2- Tetrachlorothane	3.08E+01	1.00E+00	1.00E+00	5.07E-03	4.00E-04	2.98E-05	1.56E-01	1.23E-02	9.17E-04	3.50E+01	2.00E+01	0.45%	0.06%	0.00%
Carbon Tetracholride	1.13E+03	1.00E+00	1.00E+00	5.07E-03	4.00E-04	2.98E-05	5.71E+00	4.51E-01	3.36E-02	6.00E+02	1.25E+02	0.95%	0.36%	0.03%

CONCENTRATION (C)=(Q*LPF*X/Q)/RR (Ref. Eq. 5-6)

where:

Q = Source Term
RR =Release rate- the RR is the amount of material suspended in air as a function of time.
X/Q =Site specific air dispersion factor (s/m3)
LPF =Leak Path Factor

TABLE E-46 RADIOLOGICAL SOURCE TERM FOR NC3-G LOC IN THE WHB (PUNCURE OF 10-160B CASK IN RH BAY)

CD (damaged)	CI (PE-Ci)	DR	CARF	CF	CRF	NCARF	NCF	NCRF	Q (PE-Ci)	Mit. LPF w/HEPA	Unmit. LPF w/o HEPA	Mit. Q w/HEPA (PE-Ci)	Unmit. Q w/o HEPA (PE-Ci)
1	20	2.50E-02	1.00E-03	5.00E-02	1.00E-01	1.00E-03	9.50E-01	1.00E+00	4.78E-04	1.00E-06	1.00E+00	4.78E-10	4.78E-04

Q = MAR*DR*ARF*RF*LPF

Q=CD*CI*DR*((CARF*CF*CRF)+(NCARF*NCF*NCRF))*LPF

where:

Q = the source term (Ci)

Mit.Q = the mitigated source term (*with* HEPA filtration)

Unmit. Q = the unmitigated source term (*without* HEPA filtration)

CD = # of containers damaged by drop or puncture

CI = the waste container inventory

MAR =(CD puncture + CD drop) * CI

DR = Damage Ratio = The DR is that fraction of the MAR actually impacted by the accident condition.

CARF = Combustible Airborne Release Fraction-The fraction of combustible radioactive material that is suspended in air.

CF = Combustible Fraction = Percentage of MAR that is combustible.

CRF = Combustible Respirable Fraction = The percentage of combustible material that is in the respirable size range

NCF = Noncombustible Fraction = Percentage of the MAR that is noncombustible.

NCRF = Noncombustible Respirable Fraction = The percentage of noncombustible material that is in the respirable size range.

LPF =Leakpath Factor = the cumulative fraction of airborne material that escapes to the atmosphere from the postulated accident (i.e.,HEPA filtration; plateout)

NCARF = Noncombustible Airborne Release Fraction-The fraction of combustible radioactive material that is suspended in air.

TABLE E-47 RADIOLOGICAL CONSEQUENCE ANALYSIS FOR NC3-G LOC IN THE WHB (PUNCURE OF 10-160B CASK IN RH BAY)

	Q (PE-Ci)	On-Site (100 meters) X/Q (s/m3)	Exclusive Use Area X/Q (s/m3)	Site Boundary X/Q (s/m3)	BR (m3/s)	DCF (rem/Ci)	On-Site (100 meters) CEDE (rem)	Exclusive Use Area CEDE (rem)	Site Boundary CEDE (rem)
Mitigated									
	4.78E-10	5.07E-03	4.00E-04	2.98E-05	3.33E-04	5.10E+08	4.11E-07	3.24E-08	2.42E-09
Unmitigated									
	4.78E-04	5.07E-03	4.00E-04	2.98E-05	3.33E-04	5.10E+08	4.11E-01	3.24E-02	2.42E-03

Committed Effective Dose Equivalent (CEDE) = D = Q*X/Q*BR*DCF (Ref. Eq. 5-5)

where:

D = Radiological dose (Committed Effective Dose Equivalent (CEDE)) (rem)

Q = the source term (Ci)

X/Q = Site specific air dispersion factor (s/m3)

BR = C31Breathing rate (standard man) (m3/s) International Commission on Radiological Protection (ICRP) No. 23 (Light activity 20.0 liters/min or 3.33 E-04 m3/s)

DCF = Dose Conversion Factor (rem/Ci) Internal Dose Conversion Factors for Calculation of Dose to the Public (Pu-239 Class W CEDE Inhalation 5.1E+02 rem/uCi or 5.1E+08 rem/Ci)

TABLE E-48 RADIOLOGICAL CONSEQUENCE ANALYSIS FOR IMMEDIATE WORKER FOR NC3-G LOC IN THE WHB (PUNCURE OF 10-160B CASK IN RH BAY)							
Type	**Q (PE-Ci)**	**BR (m^3/s)**	**DCF (rem/Ci)**	**Air Movement Rate (m/s)**	**Time Exposure Begins (sec)**	**Time Exposure Ends (sec)**	**Immediate Worker CEDE (rem)**
Unmitigated	4.78E-04	3.33E-04	5.10E+08	2.50E-01	1.50E+01	3.00E+01	4.13E+00

$D=(Q*T_0*BR*DCF)*[3/(4pa3)]*(T_1^{-2} - T_2^{-2})$ (Ref. Eq. 5-10)

where:

D = Radiological dose (Committed Effective Dose Equivalent (CEDE)) (rem)

Q = Radiological source term (Ci)

T_0 = Exposure time in seconds (T_0=1sec)

BR = Breathing rate (standard man) (m^3/s) International Commission on Radiological Protection (ICRP) No.23 (Light activity 5.3 gallons/min [20.0 liters/min or 3.33 E-04 m^3/s])

DCF = Dose conversion factor (rem/Ci) Internal Dose Conversion Factors for Calculation of Dose to the Public (Pu-239 Class W CEDE Inhalation 5.1E+02 rem/uCi or 5.10E+08 rem/Ci)

V = Volume of hemisphere of air (m^3) = $2/3(PI)r^3$

r = Radius of hemisphere = a * t

a = cloud expansion rate, 0.82 ft/s (0.25 m/s) = Air Movement Rate

t = time after accident (seconds)

TABLE E-49 VOC CHEMICAL SOURCE TERM ANALYSIS FOR NC3-G LOC IN THE WHB (PUNCURE OF 10-160B CASK IN RH BAY)

Compound	CI (mg)	CD	MAR (mg)	DR	CF	CRF	CARF	NCF	NCRF	NCARF	Q (mg)
Chemical											
Methylene Chloride	2.03E+02	3	6.10E+02	1.00E+00	5.00E-02	1.00E+00	1.00E+00	9.50E-01	1.00E+00	1.00E+00	6.10E+02
Chloroform	1.96E+01	3	5.89E+01	1.00E+00	5.00E-02	1.00E+00	1.00E+00	9.50E-01	1.00E+00	1.00E+00	5.89E+01
1,1,2,2- Tetrachlorothane	1.03E+01	3	3.08E+01	1.00E+00	5.00E-02	1.00E+00	1.00E+00	9.50E-01	1.00E+00	1.00E+00	3.08E+01
Carbon Tetracholride	3.75E+02	3	1.13E+03	1.00E+00	5.00E-02	1.00E+00	1.00E+00	9.50E-01	1.00E+00	1.00E+00	1.13E+03

Q = MAR*DR*ARF*RF

Q = CD*CI*DR*((CARF*CF*CRF) + (NCF*NCRF*NCARF))

where:

Q = the source term (Ci)

CD = # of containers damaged by drop or puncture

CI = the waste container inventory

MAR = (CD puncture + CD drop) * CI

DR = Damage Ratio = The DR is that fraction of the MAR actually impacted by the accident condition.

CARF = Combustible Airborne Release Fraction-The fraction of combustible radioactive material that is suspended in air.

CF = Combustible Fraction = Percentage of MAR that is combustible.

CRF = Combustible Respirable Fraction = The percentage of combustible material that is in the respirable size range

NCF = Noncombustible Fraction = Percentage of the MAR that is noncombustible.

NCRF = Noncombustible Respirable Fraction = The percentage of noncombustible material that is in the respirable size range.

LPF = Leakpath Factor = the cumulative fraction of airborne material that escapes to the atmosphere from the postulated accident (i.e.,HEPA filtration; plateout)

NCARF = Noncombustible Airborne Release Fraction-The fraction of combustible radioactive material that is suspended in air.

TABLE E-50 VOC CHEMICAL CONSEQUENCE ANALYSIS FOR NC3-G LOC IN THE WHB (PUNCURE OF 10-160B CASK IN RH BAY)

Compound	Q (mg)	LPF	RR (sec)	On-site (100 meters) X/Q (s/m3)	Exclusive Use Area X/Q (s/m3)	Site Boundary X/Q (s/m3)	On-site (100 meters) C (mg/m3)	Exculsive Use Area C (mg/m3)	Site Boundary C (mg/m3)
Chemical									
Methylene Chloride	6.10E+02	1.00E+00	1.00E+00	5.07E-03	4.00E-04	2.98E-05	3.09E+00	2.44E-01	1.82E-02
Chloroform	5.89E+01	1.00E+00	1.00E+00	5.07E-03	4.00E-04	2.98E-05	2.99E-01	2.36E-02	1.76E-03
1,1,2,2- Tetrachlorothane	3.08E+01	1.00E+00	1.00E+00	5.07E-03	4.00E-04	2.98E-05	1.56E-01	1.23E-02	9.17E-04
Carbon Tetracholride	1.13E+03	1.00E+00	1.00E+00	5.07E-03	4.00E-04	2.98E-05	5.71E+00	4.51E-01	3.36E-02

CONCENTRATION (C)=(Q*LPF*X/Q)/RR (Ref. Eq. 5-6)

Limiting On-site Criteria (100 meter) (mg/m3)	Limiting Off-site Criteria (mg/m3)	Ratio (conc/limit) (100 meters)	Ratio (conc/limit) Exclusive Use Area	Ratio (conc/limit) Site Boundary
1.25E+04	2.50E+03	0.02%	0.01%	0.00%
2.50E+04	2.50E+02	0.00%	0.01%	0.00%
6.00E+02	3.50E+01	0.03%	0.04%	0.00%
4.00E+03	6.00E+02	0.14%	0.08%	0.01%

where:

Q = Source Term
RR =release rate- the RR is the amount of material suspended in air as a function of time.
X/Q =Site specific air dispersion factor (s/m3)
LPF =Leak Path Factor

TABLE E-51 VOC CHEMICAL CONSEQUENCE ANALYSIS FOR NC3-G LOC IN THE WHB (PUNCURE OF 10-160B CASK IN RH BAY) FOR IMMEDIATE WORKER

Compound	Q (mg)	Exposure Time (sec)	RR (1/1 sec)	Expanding Cloud Volume (m^3)	Immediate Worker C(mg/m^3 or f/cc)*	Limiting Criteria	% of Guidelines (Conc/Limit)
Chemical							
Methylene Chloride	6.10E+02	1.50E+01	1.00E+00	1.14E+02	8.03E+01	1.25E+04	0.64%
Chloroform	5.89E+01	1.50E+01	1.00E+00	1.14E+02	7.75E+00	2.50E+04	0.03%
1,1,2,2- Tetrachlorothane	3.08E+01	1.50E+01	1.00E+00	1.14E+02	4.05E+00	6.00E+02	0.68%
Carbon Tetracholride	1.13E+03	1.50E+01	1.00E+00	1.14E+02	1.48E+02	4.00E+03	3.71%

C = (Q*T)/(RR*V)

where:

C = Concentration (mg/m^3)
Q = Chemical Source Term (mg)
T =Length of exposure (seconds)
RR =Release Rate (VOCs are assumed to be instantaneously released, RR = 1 Second)
V =Volume of expanding cloud (m^3)

TABLE E-52 RADIOLOGICAL SOURCE TERM FOR NC3-H LOC IN THE WHB (DROPPED 10-160B CASK IN RH BAY)

CD (damaged)	CI (PE-Ci)	DR	CARF	CF	CRF	NCARF	NCF	NCRF	Q (PE-Ci)	Mit. LPF w/HEPA	Unmit. LPF w/o HEPA	Mit. Q w/HEPA (PE-Ci)	Unmit. Q w/o HEPA (PE-Ci)
1	20	2.50E-02	1.00E-03	5.00E-02	1.00E-01	1.00E-03	9.50E-01	1.00E+00	4.78E-04	1.00E-06	1.00E+00	4.78E-10	4.78E-04

Q = MAR*DR*ARF*RF*LPF

Q=CD*CI*DR*((CARF*CF*CRF)+(NCARF*NCF*NCRF))*LPF

where:

Q = the source term (Ci)

Mit.Q = the mitigated source term (*with* HEPA filtration)

Unmit. Q = the unmitigated source term (*without* HEPA filtration)

CD = # of containers damaged by drop or puncture

CI = the waste container inventory

MAR =(CD puncture + CD drop) * CI

DR = Damage Ratio = The DR is that fraction of the MAR actually impacted by the accident condition.

CARF = Combustible Airborne Release Fraction-The fraction of combustible radioactive material that is suspended in air.

CF = Combustible Fraction = Percentage of MAR that is combustible.

CRF = Combustible Respirable Fraction = The percentage of combustible material that is in the respirable size range

NCF = Noncombustible Fraction = Percentage of the MAR that is noncombustible.

NCRF = Noncombustible Respirable Fraction = The percentage of noncombustible material that is in the respirable size range.

LPF =Leakpath Factor = the cumulative fraction of airborne material that escapes to the atmosphere from the postulated accident (i.e.,HEPA filtration; plateout)

NCARF = Noncombustible Airborne Release Fraction-The fraction of combustible radioactive material that is suspended in air.

TABLE E-53 RADIOLOGICAL CONSEQUENCE ANALYSIS FOR NC3-H LOC IN THE WHB (DROPPED 10-160B CASK IN RH BAY)									
	Q (PE-Ci)	On-Site (100 meters) X/Q (s/m3)	Exclusive Use Area X/Q (s/m3)	Site Boundary X/Q (s/m3)	BR (m3/s)	DCF (rem/Ci)	On-Site (100 meters) CEDE (rem)	Exclusive Use Area CEDE (rem)	Site Boundary CEDE (rem)
Mitigated									
	4.78E-10	5.07E-03	4.00E-04	2.98E-05	3.33E-04	5.10E+08	4.11E-07	3.24E-08	2.42E-09
Unmitigated									
	4.78E-04	5.07E-03	4.00E-04	2.98E-05	3.33E-04	5.10E+08	4.11E-01	3.24E-02	2.42E-03

Committed Effective Dose Equivalent (CEDE) = D = Q*X/Q*BR*DCF (Ref. Eq. 5-5)

where:

D = Radiological dose (Committed Effective Dose Equivalent (CEDE)) (rem)

Q = the source term (Ci)

X/Q = Site specific air dispersion factor (s/m3)

BR = C31Breathing rate (standard man) (m3/s) International Commission on Radiological Protection (ICRP) No. 23 (Light activity 20.0 liters/min or 3.33 E-04 m3/s)

DCF = Dose Conversion Factor (rem/Ci) Internal Dose Conversion Factors for Calculation of Dose to the Public (Pu-239 Class W CEDE Inhalation 5.1E+02 rem/uCi or 5.1E+08 rem/Ci)

TABLE E-54 RADIOLOGICAL CONSEQUENCE ANALYSIS FOR IMMEDIATE WORKER FOR NC3-H LOC IN THE WHB (DROPPED 10-160B CASK IN RH BAY)

Type	Q (PE-Ci)	BR (m^3/s)	DCF (rem/Ci)	Air Movement Rate (m/s)	Time Exposure Begins (sec)	Time Exposure Ends (sec)	Immediate Worker CEDE (rem)
Unmitigated	4.78E-04	3.33E-04	5.10E+08	2.50E-01	1.50E+01	3.00E+01	4.13E+00

D = (Q*T*BR*DCF)/V (Ref. Eq. 5-7)

where:

D = Radiological dose (Committed Effective Dose Equivalent (CEDE)) (rem)

Q = Radiological source term (Ci)

T = Exposure time in seconds (depends on the scenario)

BR = Breathing rate (standard man) (m3/s) International Commission on Radiological Protection (ICRP) No.23 (Light activity 5.3 gallons/min [20.0 linters/min or 3.33 E-04 m^3/s])

DCF = Dose conversion factor (rem/Ci) Internal Dose Conversion Factors for Calculation of Dose to the Public (Pu-239 Class W CEDE Inhalation 5.1E+02 rem/uCi or 5.10E+08 rem/Ci)

V = Volume of hemisphere of air (m^3) = 2/3(PI)r^3

r = Radius of hemisphere = a * t

a = cloud expansion rate, 0.82 ft/s (0.25 m/s) = Air Movement Rate

t = time after accident (seconds)

TABLE E-55 VOC CHEMICAL SOURCE TERM ANALYSIS FOR NC3-H LOC IN THE WHB (DROPPED 10-160B CASK IN RH BAY)

Compound	CI (mg)	CD	MAR (mg)	DR	CF	CRF	CARF	NCF	NCRF	NCARF	Q (mg)
Chemical											
Methylene Chloride	2.03E+02	5	1.02E+03	1.00E+00	5.00E-02	1.00E+00	1.00E+00	9.50E-01	1.00E+00	1.00E+00	1.02E+03
Chloroform	1.96E+01	5	9.82E+01	1.00E+00	5.00E-02	1.00E+00	1.00E+00	9.50E-01	1.00E+00	1.00E+00	9.82E+01
1,1,2,2- Tetrachlorothane	1.03E+01	5	5.13E+01	1.00E+00	5.00E-02	1.00E+00	1.00E+00	9.50E-01	1.00E+00	1.00E+00	5.13E+01
Carbon Tetracholride	3.75E+02	5	1.88E+03	1.00E+00	5.00E-02	1.00E+00	1.00E+00	9.50E-01	1.00E+00	1.00E+00	1.88E+03

Q = MAR*DR*ARF*RF

Q = CD*CI*DR*((CARF*CF*CRF) + (NCF*NCRF*NCARF))

where:

Q = the source term (Ci)

CD = # of containers damaged by drop or puncture

CI = the waste container inventory

MAR = (CD puncture + CD drop) * CI

DR = Damage Ratio = The DR is that fraction of the MAR actually impacted by the accident condition.

CARF = Combustible Airborne Release Fraction-The fraction of combustible radioactive material that is suspended in air.

CF = Combustible Fraction = Percentage of MAR that is combustible.

CRF = Combustible Respirable Fraction = The percentage of combustible material that is in the respirable size range

NCF = Noncombustible Fraction = Percentage of the MAR that is noncombustible.

NCRF = Noncombustible Respirable Fraction = The percentage of noncombustible material that is in the respirable size range.

LPF = Leakpath Factor = the cumulative fraction of airborne material that escapes to the atmosphere from the postulated accident (i.e.,HEPA filtration; plateout)

NCARF = Noncombustible Airborne Release Fraction-The fraction of combustible radioactive material that is suspended in air.

TABLE E-56 VOC CHEMICAL CONSEQUENCE ANALYSIS FOR NC3-H LOC IN THE WHB (DROPPED 10-160B CASK IN RH BAY)

Compound	Q (mg)	LPF	RR (sec)	On-site (100 meters) X/Q (s/m3)	Exclusive Use Area X/Q (s/m3)	Site Boundary X/Q (s/m3)	On-site (100 meters) C (mg/m3)	Exculsive Use Area C (mg/m3)	Site Boundary C (mg/m3)	Limiting On-site Criteria (100 meter) (mg/m3)	Limiting Off-site Criteria (mg/m3)	Ratio (conc/limit) (100 meters)	Ratio (conc/limit) Exclusive Use Area	Ratio (conc/limit) Site Boundary
Chemical														
Methylene Chloride	1.02E+03	1.00E+00	1.00E+00	5.07E-03	4.00E-04	2.98E-05	5.16E+00	4.07E-01	3.03E-02	1.25E+04	2.50E+03	0.04%	0.02%	0.00%
Chloroform	9.82E+01	1.00E+00	1.00E+00	5.07E-03	4.00E-04	2.98E-05	4.98E-01	3.93E-02	2.93E-03	2.50E+04	2.50E+02	0.00%	0.02%	0.00%
1,1,2,2- Tetrachlorothane	5.13E+01	1.00E+00	1.00E+00	5.07E-03	4.00E-04	2.98E-05	2.60E-01	2.05E-02	1.53E-03	6.00E+02	3.50E+01	0.04%	0.06%	0.00%
Carbon Tetracholride	1.88E+03	1.00E+00	1.00E+00	5.07E-03	4.00E-04	2.98E-05	9.52E+00	7.51E-01	5.59E-02	4.00E+03	6.00E+02	0.24%	0.13%	0.01%

CONCENTRATION (C)=(Q*LPF*X/Q)/RR (Ref. Eq. 5-6)

where:

Q = Source Term

RR =Release rate - the RR is the amount of material suspended in air as a function of time

X/Q =Site specific air dispersion factor (s/m3)

LPF =Leak Path Factor

TABLE E-57 VOC CHEMICAL CONSEQUENCE ANALYSIS FOR NC3-H LOC IN THE WHB (DROPPED 10-160B CASK IN RH BAY) FOR IMMEDIATE WORKER

Compound	Q (mg)	Exposure Time (sec)	RR (1/1 sec)	Expanding Cloud Volume (m^3)	Immediate Worker C(mg/m^3	Limiting Criteria	% of Guidelines (Conc/limit
Chemical							
Methylene Chloride	1.02E+03	1.50E+01	1.00E+00	1.14E+02	1.34E+02	1.25E+04	1.07%
Chloroform	9.82E+01	1.50E+01	1.00E+00	1.14E+02	1.29E+01	2.50E+04	0.05%
1,1,2,2- Tetrachlorothane	5.13E+01	1.50E+01	1.00E+00	1.14E+02	6.75E+00	6.00E+02	1.13%
Carbon Tetracholride	1.88E+03	1.50E+01	1.00E+00	1.14E+02	2.47E+02	4.00E+03	6.18%

C = (Q*T)/(RR*V)

where:

C = Concentration (mg/m^3)
Q = Chemical Source Term (mg)
T =Length of exposure (seconds)
RR =Release Rate (VOCs are assumed to be instantaneously released, RR = 1 Second)
V =Volume of expanding cloud (m^3) - Based on area of the RH Bay

This page intentionally blank

APPROVAL

Safety Evaluation Report
of the
Waste Isolation Pilot Plant
Preliminary Safety Analysis Report for
Remote-Handled (RH) Transuranic (TRU) Waste

U. S. Department of Energy
Carlsbad Field Office

Date: **January 2003**
Revision Number: **DOE/WIPP-03-3174**

Approved: Chuan-Fu Wu for
Dr. Inés Triay, Manager

REVIEW TEAM APPROVAL

Safety Evaluation Report
of the
Waste Isolation Pilot Plant
Preliminary Safety Analysis Report for
Remote-Handled (RH) Transuranic (TRU) Waste

U. S. Department of Energy
Carlsbad Field Office

Senior Advisor	Chuan-Fu Wu **Authorization Basis Senior Technical Advisor**	1/24/03 **Date**
Review Team Leader	Richard Farrell **Safety Officer**	1/24/03 **Date**
Review Team Member	John A. Stanley	1/24/03 **Date**
Review Team Member	Jim Klaus	1/24/03 **Date**

1.0 INTRODUCTION

This Safety Evaluation Report (SER) documents the review of the draft Waste Isolation Pilot Plant (WIPP) Preliminary Safety Analysis Report for Remote-Handled (RH) Waste (DOE/WIPP-Draft 3174) (RH PSAR) by the Carlsbad Field Office (CBFO) Review Team and provides the CBFO Manager with the basis for its approval. Consistent with the Department of Energy (DOE) guidance on use of a graded approach, the detail included in this SER is consistent with that required for approval of a preliminary safety analysis report (SAR). This SER concludes that the safety basis documented in the RH PSAR is sufficient to protect workers, the public, and the environment from any hazards associated with the preparations and pre-operational activities necessary to obtain authorization to receive RH-TRU waste.

The current WIPP Hazardous Waste Facility Permit (HWFP) does not allow for the receipt or disposal of RH-TRU waste. A permit modification is underway that would allow for RH-TRU waste disposal. In the meantime, the RH waste handling facilities and processes have undergone modifications to make them more efficient while maintaining safety and reliability and to prepare them for operational readiness evaluations that must be successfully completed prior to the planned receipt of RH-TRU waste. The RH PSAR evaluated in this review provides the safety basis of the current RH waste handling process and will be converted into a final Documented Safety Analysis (DSA) for RH-TRU waste prior to the beginning of RH-TRU waste receipt, scheduled for the year 2005.

2.0 PSAR REVIEW PROCESS

Review of the RH PSAR was performed by a team that included two primary reviewers and the CBFO Safety Officer. The two CBFO Technical Assistance Contractor (CTAC) Safety and Operations Group professional staff who supported CBFO's review of the RH PSAR are technically qualified in the subject matter. These two individuals both have advanced degrees in the physical sciences or engineering and extensive experience in safety analysis methodology and applications. The CBFO Safety Officer served as the review team leader. The CBFO Authorization Basis Senior Technical Advisor served as senior advisor for the review. The review was conducted in accordance with the guidance provided in DOE-STD-1104-96, *Review and Approval of Nonreactor Nuclear Facility Safety Analysis Reports,* and DOE G 421.1-2, *Implementation Guide for Use in Developing Documented Safety Analyses to Meet Subpart B of 10 CFR 830.*

The review process consisted of a thorough review of the appropriate chapters and appendices of the RH PSAR (see Section 4.0). CBFO provided comments based on the review to the Washington TRU Solutions (WTS) Safety Analysis Team. These comments were based on review of the draft text, discussions with WTS management and staff, observation of operations,

and physical inspection of systems, equipment, and hardware designed for RH-TRU waste receipt and emplacement. This PSAR will be converted into a final RH DSA, with a first draft of the DSA due to CBFO by September 30, 2003.

3.0 APPROVAL BASES

DOE-STD-1104-96 lists five key bases upon which approval of a SAR should be assessed. These are base information, hazard and accident analysis, safety structures, systems, and components (SSCs), derivation of technical safety requirements (TSRs), and safety management program characteristics. Although each of these was used during the review as a basis upon which to evaluate the adequacy of the document, a preliminary SAR is not required to contain the same amount of rigor with respect to these approval bases as would a final SAR. Therefore, the following specific criteria, obtained from DOE G 421.1-2, Section 4.1.1.3, were used to evaluate the PSAR against the above safety bases:

- All identified hazards and potential accidents have been addressed.
- Supporting analyses are sufficiently rigorous to justify the selection of safety SSCs and controls.
- The accepted hierarchy of controls includes passive engineering features, active engineering features, administrative controls, and personal protective equipment, in that order.
- Safety SSCs are identified and their performance requirements clearly described.
- A proposed list of controls and safety management programs has been developed to address operational safety considerations.

4.0 SCOPE OF REVIEW

The RH PSAR consists of ten chapters and five appendices and also includes the *Waste Isolation Pilot Plant Remote-Handled (RH) Preliminary Technical Safety Requirements,* DOE/WIPP-03-3178. Certain of these chapters and appendices have not changed significantly since past reviews, including some that are identical to portions of the Safety Analysis Report for Contact-Handled Waste (CH SAR), that was recently approved by CBFO. Those sections were not reviewed again in this review, except to the extent that they provided information necessary for review of the remaining chapters and appendices. This review therefore focused on the following chapters and appendices:

- Chapter 1, Executive Summary
- Chapter 4, Facility Design and Operation
- Chapter 5, Hazard and Accident Analysis
- Chapter 6, Derivation of Technical Safety Requirements
- Chapter 7, Radiological and Hazardous Material Protection
- Appendix A, Waste Container Inventory Calculations
- Appendix C, HAZOP Session Summary Tables
- Appendix D, Determination of Frequencies for Selected Accidents
- Appendix E, Source Term/Dose Calculations
- DOE/WIPP-DRAFT-3178, Waste Isolation Pilot Plant Remote-Handled (RH) Preliminary Technical Safety Requirements

5.0 RESULTS OF REVIEW

The review team is satisfied that this RH PSAR meets all of the criteria set out in Section 3.0 above. The hazard and accident analyses are comprehensive and allow for the designation of safety SSCs and the formulation of appropriate TSRs. Safety management programs are well-developed and effectively address operational safety considerations. However, the reviewers identified several minor concerns, the correction of which will aid the transition of this RH PSAR into a final RH DSA. The most significant of these concerns can be grouped into the following categories:

- Some of the values for variables used in the accident frequency calculations in Appendix D appear to be overly conservative and not based upon actual WIPP experience or current WIPP configuration.

- Anticipated throughput of RH 10-160B casks, drums, and canisters appears unrealistically high and not in accordance with current projections, thus resulting in overly conservative accident frequency results.

- Better explanations are needed of how container inventory for the various containers was determined and for how the Beyond the Design Basis accidents were selected.

- Some of the accident frequency calculations do not include a term for the probability of waste container failure given an impact, resulting in overly conservative frequency results.

Throughput of RH 10-160B casks, drums, and canisters was changed to reflect the latest projections and calculations dependent upon these throughput numbers were changed accordingly, thus alleviating this concern. Also, all comments with which WTS agreed and whose

incorporation did not unduly delay the release of the RH PSAR have also been incorporated. Since correcting the other concerns would result in less conservative (although more realistic) accident results or would have no effect on the accident results, the RH safety basis would not be compromised if comments reflecting these concerns were not incorporated prior to the release of this preliminary document (see also Section 6.0). However, they and the other comments not already incorporated should be addressed in the final RH DSA.

6.0 RECOMMENDATIONS

Although failure to correct the remaining concerns noted in Section 5.0 would not jeopardize the RH safety basis and therefore is not required, CBFO makes the following recommendation regarding their disposition as well as the disposition of the rest of the comments:

- These remaining concerns, together with any other comments not already addressed as noted in Section 5.0, may be deferred for resolution until after the release of the RH PSAR. CBFO and WTS should resolve these comments during the preparation of the final RH DSA and the resolved comments should be incorporated into the final RH DSA.

7.0 CONCLUSIONS AND APPROVAL

Based on the review team's assessment of the RH PSAR and CBFO's evaluation, it is concluded that RH-TRU waste operations will be safe as planned and that the preparations and pre-operational activities necessary for obtaining authorization to receive and dispose of RH-TRU mixed waste will pose no threat to workers, the public, or the environment if conducted within the documented safety basis. CBFO thus approves this RH PSAR, with the recommendation provided in Section 6.0 and on the condition that the final RH DSA will be completed and approved by CBFO prior to the initiation of receipt of RH TRU waste.

DOE/WIPP- 03-3178

WASTE ISOLATION PILOT PLANT REMOTE-HANDLED (RH) PRELIMINARY TECHNICAL SAFETY REQUIREMENTS

Prepared for

United States Department of Energy

Washington Tru Solutions

This page intentionally left blank

TECHNICAL SAFETY REQUIREMENTS
TABLE OF CONTENTS

SECTION	TITLE	PAGE NO.
1	Use and Application	1
	1.1Definitions	1
	1.2 Facility MODES	2
	1.2.1 WASTE HANDLING MODE	2
	1.2.2 WASTE STORAGE/DISPOSAL MODE	2
	1.3 Safety Limits (SLs)	2
	1.4 Limiting Control Settings (LCSs)	3
	1.5 Limiting Conditions for Operations (LCOs)	3
	1.6 Surveillance Requirements (SRs)	5
	1.7 Administrative Controls (ACs)	5
2	Safety Limits	9
3/4	OPERATIONAL LIMITS and Surveillance Requirements	9
5	Administrative Controls	9
	5.1 Defense-In-Depth SSC Operation	9
	5.2 Facility Operations Chain of Command and Responsibilities	9
	5.3 Facility Staffing Requirements	10
	5.3.1 WASTE STORAGE/DISPOSAL MODE Staffing Requirements	10
	5.3.2 WASTE HANDLING MODE Staffing Requirements	10
	5.3.2.1 Staffing Requirements for WASTE HANDLING MODE in the WHB	10
	5.3.2.2 Staffing Requirements for WASTE HANDLING MODE in the Underground	10
	5.4 Facility Staff Qualifications	11
	5.5 Nuclear Review Board (NRB)	11
	5.6 Reportable Occurrence Action	11
	5.7 TSR VIOLATIONS	11
	5.8 Revisions to the TSR	12
	5.9 Programs	12
	5.9.1 Configuration Control	12
	5.9.2 Document Control	12
	5.9.3 Maintenance	12
	5.9.4 Quality Assurance Program	12
	5.9.5 Procedures	12
	5.9.6 Training	12
	5.9.7 Conduct of Operations	13
	5.9.8 Emergency Management	13
	5.9.9 Radiation Protection	13
	5.9.10 WASTE Canister/Drum Integrity	13
	5.9.11 Criticality Safety	14
	5.9.12 WASTE Characteristics	14
	5.9.13 Unreviewed Safety Questions	16
	5.9.14 Geotechnical Monitoring	16
	5.9.15 Fire Protection	16
	5.9.16 Waste Hoist (designated Safety Significant) Performance	16

TECHNICAL SAFETY REQUIREMENTS
TABLE OF CONTENTS

SECTION TITLE PAGE NO.

6 References 17

APPENDIX A BASES A-1

APPENDIX B DESIGN FEATURES B-1

PRELIMINARY TECHNICAL SAFETY REQUIREMENTS
LIST OF TABLE

SECTION	TITLE	PAGE NO.
Table 5-1,	Summary of Applicability of Defense-In-Depth SSCs to WIPP MODEs	18

This page intentionally left blank

TECHNICAL SAFETY REQUIREMENTS

1 Use and Application

This document provides the WIPP Preliminary Technical Safety Requirements (PTSR) for Remote Handled (RH) waste, initially in accordance with the requirements of DOE Order 5480.22, *Technical Safety Requirements*[1] and is in compliance with 10 CFR 830.205.[2] As stated in Section 4. Technical Safety Requirements Guidance, of DOE G 423.1-1,[3] "10 CFR 830.205 is based on the TSR Order (DOE Order 5480.22). Thus, it is expected that TSRs prepared to meet the TSR Order will readily meet the requirements of the TSR rule." DOE Order 5480.22[1] provided detailed criteria for the selection of PTSR Safety Limits (SLs), Limiting Control Settings (LCSs), Limiting Conditions for Operations (LCOs), Surveillance Requirements (SRs), and Administrative Controls (ACs).

Based on the WIPP RH Preliminary Safety Analysis Report (PSAR)[4] Chapter 5, Hazards and Accident Analyses, SLs, LCSs, LCOs, and SRs are not required for the WIPP facility as discussed below. As discussed in RH PSAR[4] Chapter 5, Design Class I Systems, Structures or Components (SSCs) are not required for the WIPP to mitigate any accidental radiological and non-radiological Maximally Exposed Individual (MEI) and noninvolved worker consequences to acceptable levels. WIPP RH PTSR in the form of ACs are derived in RH PSAR [4] Chapter 6. These ACs provide RH PTSR covering the WIPP defense-in-depth approach developed in RH PSAR[4] Chapter 5.

1.1Definitions

---------- **NOTE** ----------

The definitions provided in this section are specifically applicable to the PTSR, and are displayed in all capital letters throughout this PTSR Document. Also, some definitions refer the reader to a specific section of this document to help provide a more complete description than can be provided in a summarized definition read out of context.

Term	Definition
MODE	A MODE of operation defines the operating condition of the WIPP facility at a given time. See Section 1.2, MODES
OPERATIONAL LIMITS	Those limits that are required to ensure the safe operation of a nuclear facility. Specifically, these limits include LCSs and LCOs
SAFETY SIGNIFICANT	SSCs not designated as Safety Class, but whose preventive or mitigative function is a major contributor to defense in depth (i.e. prevention of uncontrolled material releases) and/or worker safety as determined from hazard analysis.
TECHNICAL SAFETY REQUIREMENTS	TSR are those requirements that define the conditions, safe boundaries, and the management or administrative controls necessary to ensure the safe operation of a nuclear facility and that reduce the potential risk to the public and facility workers from uncontrolled releases of radioactive materials or from radiation exposures due to inadvertent criticality. TSR consist of safety limits, OPERATIONAL LIMITS, surveillance requirements, administrative controls, use and application instructions, and the basis thereof.
VIOLATION	See Section 5.7, TSR VIOLATIONS.

WASTE	Remote-Handled (RH) Transuranic (TRU) WASTE materials being received, handled and disposed in WIPP-approved RH containers. Site derived mixed waste is also considered in this definition when it is handled in containers or cleaned up following a breach in a container
WASTE HANDLING	Activities occurring when actual RH WASTE in approved RH containers is being unloaded, transported, and emplaced. The following similar activities are not considered WASTE HANDLING activities, and do not present the level of hazard requiring the protections afforded the handling of RH WASTE; storing or inspecting RH WASTE in the WHB or the Underground
WASTE STORAGE/ DISPOSAL	For the purposes of these TECHNICAL SAFETY REQUIREMENTS, with regard to transuranic waste: the term "STORAGE" refers to the temporary storage of that waste above ground; and, the term "DISPOSAL" refers to that waste which has been emplaced in the underground horizon

1.2 Facility MODES

Operations at the WIPP consist of WASTE HANDLING, storage, and disposal operations. The following is a definition of the MODES of operations. The MODE is defined such that the Waste Handling Building and the Underground may be in different MODES. Defense-In-Depth SSCs are operated as required in each MODE as specified in Section 5. The facility will always be in the WASTE STORAGE/DISPOSAL MODE or WASTE HANDLING MODE as described below.

1.2.1 WASTE HANDLING MODE

The Waste Handling Building (WHB) and/or the Underground is configured for RH WASTE HANDLING, and all required Defense-In Depth SSCs are operated as required in Table 5-1. Maintenance, repair activities, and inspections are allowed as long as they do not prevent the functions of the Defense-In Depth SSCs required for the WASTE HANDLING MODE.

1.2.2 WASTE STORAGE/DISPOSAL MODE

WASTE HANDLING operations are not being conducted in the WHB and/or in the Underground. WHB and/or the Underground is configured for WASTE STORAGE/DISPOSAL MODE, and required Defense-In-Depth SSCs are operated as required in Table 5-1. No WASTE HANDLING operations are allowed during WASTE STORAGE/DISPOSAL MODE, except as required to provide orderly transition, according to procedure, from WASTE HANDLING MODE. Maintenance, repair activities, and inspections are allowed, provided the Defense-In-Depth SSCs required for the MODE are restored in a timely manner, and Defense-In-Depth SSCs are not intentionally removed from service during the WASTE HANDLING completion allowed above.

1.3 Safety Limits (SLs)

As defined in DOE G 423.1-1,[3] SLs are limits on process variables associated with those physical barriers, generally passive, that are necessary for the intended facility function, and that are found to be required to guard against the uncontrolled release of radioactivity and other hazardous material. "Process Variables" refers to observable, measurable parameters such as temperature and pressure. "Passive physical barriers" refers to those barriers that constitute the primary process material boundary.

Based on the analysis presented in RH PSAR [4] Chapter 5, no SLs are identified for the WIPP facility.

1.4 Limiting Control Settings (LCSs)

As defined in DOE G 423.1-1,[3] LCSs are settings on safety systems that control process variables to prevent exceeding SLs. More precisely, an LCS is the set point for an instrument or device monitoring a process variable that, if exceeded, initiates actions to prevent exceeding an SL.

The WIPP facility has no SLs identified, therefore, no LCSs are required.

1.5 Limiting Conditions for Operations (LCOs)

DOE G 423.1-1,[3] provides that "LCOs should be written only for systems and equipment which meet one (or more) of the following descriptions," and prescribes five selection criteria, h.(1) through h.(5). The order also emphasizes that "Maintaining the LCOs at the minimum number necessary will emphasize the importance of the LCOs and better ensure the compliance with them." All five criteria clearly tie the LCOs to the facility accident or transient analyses.

The LCO selection criteria interpretations define TSR content based on key nuclear safety analysis requirements. Specifically, three of the five TSR LCO selection criteria are understood to restrict TSR LCOs to only those requirements that are under the direct control of the facility's operators and are of primary importance for: **prevention** (Criterion h.(1)), **mitigation** (Criterion h.(2)), and **initial conditions** (Criterion h.(3)) of credible, unmitigated accident scenarios. Additionally, Criterion h.(4) involves the application of criteria h.(1), h.(2), and h.(3) to experiments and experimental facilities, and Criterion h.(5) to systems and equipment that are used for handling fissile material.

The specifics of each criterion as applied to the WIPP facility are as follows:

<u>Criterion h.(1) - Prevention:</u>

A basic concept in the protection of the public is the prevention of accidents that have the potential for an uncontrolled release of radioactive material. Criterion h.(1) is intended to ensure that TSR be selected to identify instrumentation that is used to detect, and to indicate in the control room or other control location, a significant degradation of the physical barriers which prevent the uncontrolled release of radioactive or other hazardous materials. For example, instrumentation installed to detect significant degradation of a reactor coolant pressure boundary enables the operator to correct the degraded condition prior to accident initiation or to place the facility in a condition that reduces the likelihood of the accident.

WIPP instrumentation, such as the Continuous Air Monitors (CAMs), Effluent Monitors, Area Radiation Monitors (ARMs), and installed instrumentation to control differential pressure, are not required to prevent accidents as analyzed in the RH PSAR [4] from occurring, or to facilitate the Central Monitoring Room (CMR) operator placing the facility in a condition reducing the likelihood of an accident from occurring. Therefore, Criterion h.(1) has no application to the WIPP.

Criterion h.(2) - Mitigation:

Criterion h.(2) provides that "Structures, systems, and components that are relied upon in the Safety Analyses to function or actuate to prevent or mitigate accidents, or transients that either involve the assumed failure of, or present a challenge to, the integrity of a physical barrier that prevents the uncontrolled release of radioactive materials ... intended to include only those structures, systems, and components that are part of the primary success path of a safety sequence analysis and those support and actuation systems necessary for them to function successfully."

The "primary success path of a safety sequence analysis" is defined as "the sequence of events assumed by the Safety Analyses, which leads to the conclusion of a transient or accident with consequences that are acceptable. Hence, any structure, system, or component in that assumed sequence should be included in the LCO."

Consistent with the primary intent of DOE Order 5480.22[1], establishing requirements for the protection of the public, the existing practice is: 1) to evaluate the unmitigated radiological and non-radiological consequences to the MEI and noninvolved worker as the result of an accident, 2) to compare the radiological and non-radiological consequences to established accident risk evaluation guidelines, and 3) if the consequences of the accident exceed the established accident consequence risk evaluation guidelines, to define SSCs and associated TSR LCOs mitigating or reducing those consequences to acceptable levels below the established criteria.

The unmitigated MEI and noninvolved worker radiological and non-radiological consequences and risk evaluation guidelines, as documented in Chapter 5, Tables 5.2-3 and 5.2-4, are used as the basis for applying this criterion.

Application of DOE Order 5480.22[1] TSR LCO Selection Criterion h.(2) to the WIPP:

The WIPP SSCs that are assumed to function in the RH PSAR[4] accident analysis mitigating an accident's radiological and non-radiological consequences to acceptable levels (to within the accident risk evaluation guidelines) satisfy Criterion h.(2).

The unmitigated radiological and non-radiological accident consequences were estimated and compared to the risk evaluation guidelines in Chapter 5. The unmitigated radiological and non-radiological accident consequences are below the consequence risk evaluation guidelines; therefore, 1) mitigating SSCs are not required, and 2) TSR LCOs are not required. Tables 5.2-3 and 5.2-4 of Chapter 5 of the RH PSAR[4] list the analyzed accidents and the mitigated and unmitigated MEI and noninvolved worker radiological consequences. All of the radiological and non-radiological accident consequences are well below the applicable risk evaluation guidelines. Therefore, Criterion h(2) is not applicable to the WIPP.

Criterion h.(3) - Initial Condition:

Process variables as initial conditions of accidents, or transients that are monitored and controlled during operations so the parameter remains within the analysis bounds, satisfy this selection criterion. The WIPP is not a process facility, therefore process variables are not considered in the RH PSAR[4] accident analysis as initial conditions for accidents. Thus, Criterion h.(3) is not applicable to the WIPP.

Criterion h.(4)

Criterion h.(4) involves applying criteria h.(1), h.(2), and h.(3) to experimental activities involving radioactive or other hazardous materials. There are currently no planned experimental or test activities at the WIPP. Therefore, Criterion h.(4) is not applicable to the WIPP.

Criterion h.(5)

Criterion h.(5) applies to fissile material handling facilities, and is only related to inadvertent criticality protection. Inadvertent criticality is not a credible hazard at the WIPP. Inadvertent criticality is controlled through the ACs Criticality Program in conjunction with the WASTE Characteristics program which conforms to the WIPP Waste Acceptance Criteria (WAC).[5] Therefore, Criterion h.(5) is not applicable to the WIPP.

1.6 Surveillance Requirements (SRs)

As defined in DOE G 423.1-1,[3] SRs are used to ensure operability ir availability of the safety SSCs identified in the operating limits (OLs). SRs are most often used with LCOs to periodically validate the operability of active systems or components that are subject to a limiting condition. Without SLs, Ols, LCSs, and LCOs for the WIPP facility, SRs are not required.

1.7 Administrative Controls (ACs)

As discussed in Section 4.10.7 of DOE G 423.1-1,[3] ACs impose necessary requirements controlling operation of the facility to meet all RH PTSR requirements. Without SLs, LCSs, LCOs, and SRs, WIPP specific ACs impose administrative and operational requirements to support the WIPP defense-in-depth concept.

Supporting the first layer of defense-in-depth (the prevention of accidents) as defined in RH PSAR[4] Section 5.1.6, WIPP RH PTSR ACs are established as follows:

- To maintain the design, quality, testability, inspectability, operational capability, maintainability, and accessibility of the facility, TSR ACs are required relating to: (1) configuration and document control, (2) maintenance, (3) quality assurance, and (4) WASTE hoist performance. These ACs are important to ensure the frequency of events and the availability of the operational and design conditions remain as analyzed in RH PSAR[4] Section 5.2.3.

- To ensure that the facility operations are conducted by trained and certified/qualified personnel in a controlled and planned manner, TSR ACs are required relating to: (1) facility operations chain of command and responsibilities, (2) facility staffing requirements, (3) procedures, (4) staff qualifications, (5) conduct of operations, and (6) training. These ACs are important to ensure the low frequency of the accidents analyzed in RH PSAR[4] Section 5.2.3.

- To ensure that hazards are limited within the bounds assumed in Chapter 5.2, or that the occurrence of a deviation from the assumed hazard bounds are at an acceptably low frequency, TSR ACs are required relating to: (1) WASTE characteristics (Waste Acceptance Criteria), (2) WASTE canister integrity, and (3) criticality safety. The TSR AC for WASTE characteristics limits the radionuclide content of each WASTE canister, restricts the fissile content of the containers, and restricts the presence of WASTE characteristics unacceptable for management at the WIPP facility. Container integrity ensures the robustness reflected in the WASTE release analyses, while criticality safety is a designed in-storage and handling configuration that ensures (in conjunction with WASTE

characteristics) that active criticality control is not required.

Supporting the second and third layers of defense-in-depth, WIPP PTSR ACs are identified which establish programs for radiation protection (including radiation monitoring equipment and airborne radioactivity monitoring), and mitigation of off-normal events through emergency management.

Consistent with the discussion in RH PSAR[4] Section 5.1.8, specific SSCs that fulfill a defense-in-depth safety function important to accident scenarios, or considered essential for WASTE HANDLING, storage and/or disposal operations are as follows:

1) Waste Handling Building (WHB) RH facilities Heating, Ventilation, and Air Conditioning (HVAC);
2) Underground Ventilation and Filtration Systems (UVFS) (including underground shift to filtration)
3) Waste Hoist Equipment (including brake system - designated SAFETY SIGNIFICANT);
4) WASTE Handling Equipment (including the Facility Cask loading Grapple, Grapple Hoist System including brakes, RH Bay Bridge crane, forklifts and attachments, HERE, Facility Cask Rotating Device, Facility Cask Transfer Car, Drum Carriage, Lifting Fixture, etc., as required during WASTE HANDLING operations only);
5) WHB structure (including tornado doors);
6) Central Monitoring System (to support underground shift to filtration only); and
7) Radiation Monitoring System (active waste disposal room exit alpha Continuous Air Monitor [CAM] for underground shift to filtration and Area Radiation Monitor [ARM]).
8) Devices to restrict operations including Shield Door and Crane Interlock, Crane and Hot Cell Shield Valve Interlock, Torque limiter on shield valve motor, Force Limiter on Swipe Arm, and Robotic Arm Collision Detector.

The applicability of the important defense-in-depth SSCs to each accident, analyzed in RH PSAR[4] Section 5.2.3, is listed in RH PSAR[4] Table 6-1. The above SSCs are classified as "Defense-In-Depth SSCs."

As shown in Section 1.5, based on the criteria for assigning Preliminary Technical Safety Requirement (PTSR) Limiting Conditions for Operation (LCOs), defense-in-depth SSCs are not assigned TSR LCOs. The facility has no complex system requirements to maintain an acceptable level of risk. The WIPP Waste Acceptance Criteria for transuranic WASTE and the design of the WASTE handling process and its supporting facilities provide assurance that the immediate consequences of an accident will be limited and allow the WIPP facility to isolate and contain releases while maintaining a high assurance that no additional releases will occur. The facility is designed to minimize the presence and impact of other energy sources that could provide the heat or driving force to disperse hazardous materials. The magnitude of hazardous materials that can be involved in an accident leading to a release is very limited. The radioactive material is delivered to the site in sealed containers, and the WASTE HANDLING operations are designed to maintain that integrity throughout the entire process required to safely emplace those containers in the site's underground WASTE disposal rooms. Inventory limits on individual containers ensure that heat generated by radioactive decay can be easily dissipated by passive mechanisms. Finally, only a limited number of WASTE containers have the possibility of being breached as a result of any one accident initiating event. As a result, the consequences of unmitigated

releases from all accidents hypothesized in Chapter 5, including those initiated by human error, do not produce significant offsite health consequences.

When something unusual happens during normal operations (such as defense-in-depth SSCs becoming unavailable), **WASTE HANDLING can be simply stopped** until an acceptable condition is reestablished. The WIPP facility (WHB and Underground) is designed to minimize the presence and impact of other energy sources that could provide the heat or driving force to disperse hazardous materials. Should an accident involving the breach of a canister occur, **the plant design permits the immediate cessation of activity and isolation of the area where the breach occurs**. Once isolation is achieved, there is no driving force within the WASTE or WASTE HANDLING area that could result in a further release of the WASTE material. The absence of energy sources that can disperse the radioactive WASTE allows the immediate termination of all activities, evacuation of personnel, and isolation of the area without the threat of additional consequences. This will enable WIPP personnel to then proceed with detailed planning to meet the unique circumstances of any accidental release prior to initiating decontamination and the execution of recovery actions, while assuring that the health and safety of both workers and the public is protected. The controls necessary to maintain safety during the recovery and cleanup can be documented in the recovery plans, its associated Radiological Work Permit, and the USQ process. In order to ensure protection by the identified SSCs during recovery from an event that breaches a WASTE canister, the confinement Defense-In-Depth SSCs for the WASTE HANDLING MODE will be required during the period of time that WASTE may be exposed.

Based on the above discussion, specific functional requirements are not assigned here for the Defense-In-Depth SSCs, rather, the SSCs shall be operated, as required during the applicable WIPP MODE of operation defined in the next sections. Detailed design descriptions for the Defense-In-Depth Equipment may be found in Chapter 4 and the applicable Systems Design Descriptions.

Due to the importance of the Defense-In-Depth SSCs in the WIPP defense-in-depth strategy and worker protection from accidents, RH PTSR ACs are assigned in RH PSAR[4] Chapter 6 and required in this WIPP PTSR Document, requiring the Defense-In-Depth SSCs to be operated as required when WASTE HANDLING operations are being conducted (to enter the WASTE HANDLING MODE in the WHB or the Underground).

The Defense-In-Depth SSCs operational requirements ensure that important defense-in-depth SSCs are operated as required during WASTE HANDLING operations in the Surface or Underground WASTE HANDLING MODES, to provide protection for the "most likely" WASTE HANDLING accidents identified in the RH PSAR[4] Section 5.2.3:

1) RH2, Fire in the WHB;

2) NC1, Fire in the Hot Cell;

3) RH4-B, LOC in the Underground (waste movement);

4) NC3-A, LOC in the WHB (dropped object on waste material in Hot Cell);

5) NC3-B, LOC in the WHB (dropped object on waste material outside Hot Cell);

6) NC3-C, LOC in the WHB (dropped drum or Facility canister in Hot Cell)

7) NC3-D, LOC in the WHB (dropped drum or Facility canister outside Hot Cell);

8) NC3-E, LOC in the WHB (puncture of drum in Hot Cell);

9) NC3-F, (hazardous event 12E-3) LOC in the WHB (puncture of drum or Facility canister outside Hot Cell); and

10) NC4, LOC in the Underground (waste movement)

For natural phenomenon events:

1) RH6, Design Basis Earthquake;

2) NC7, Seismic Event;

3) RH7, Design Basis Tornado;

4) NC8, Tornado Event;

And for less likely operational accidents evaluated to be beyond extremely unlikely identified in Section 5.2.3:

1) RH1, Fire in the Underground;

2) RH3, LOC in the WHB;

3) RH4-A, LOC in the Underground (waste hoist failure);

4) RH5, Fire Followed by Explosion in the Underground;

5) NC2, Fire in the Underground (same as and bounded by RH1);

6) NC3-C, (hazardous events 10B-1) LOC in the WHB (dropped drum or canister in Hot Cell);

7) NC3-F, LOC in the WHB (puncture of drum or canister outside Hot Cell);

8) NC3-G, LOC in the WHB (puncture of 10-160B cask in RH Bay);

9) NC3-H, LOC in the WHB (dropped 10-160B cask in RH Bay);

10) NC4, LOC in the Transfer Cell or Underground (waste hoist failure and Transfer Cell); and

11) NC6, Fire followed by explosion in the Underground (same as and bounded by RH5)

As discussed above, if any of the Defense-In-Depth SSCs fail to operate (when required), or becomes unavailable during WASTE HANDLING operations, WASTE HANDLING operations shall be stopped, and the facility shall be placed in the WASTE STORAGE/DISPOSAL MODE. WASTE HANDLING operations shall not resume until the required Defense-In-Depth SSCs are capable of being operated as required.

During WASTE STORAGE/DISPOSAL MODE in the WHB and/or Underground, the Defense-In-Depth SSCs operational requirements ensure that important defense-in-depth SSCs are operated as required during temporary storage operations (for RH WASTE temporarily stored in the WHB prior to transfer to the underground) to provide protection for less likely operational accidents evaluated in RH PSAR[4] Section 5.2.3 for natural phenomenon events: (1) RH6 and NC7, seismic and (2) RH7 and NC8, tornado.

For the WASTE STORAGE/DISPOSAL MODE, if any of the required Defense-In-Depth SSCs fail to operate (when required) or become unavailable, no specific actions are identified, other than to perform corrective maintenance on the affected equipment in a timely manner.

A summary of the applicability of defense-in-depth SSCs in relation to the MODE definitions is presented in Table 5-1.

2 Safety Limits

No SLs are defined for the WIPP facility.

3/4 OPERATIONAL LIMITS and Surveillance Requirements

No LCSs or LCOs are defined for the WIPP facility.

Because no OPERATIONAL LIMITS have been defined for the WIPP facility, no SRs are needed.

5 Administrative Controls

5.1 Defense-In-Depth SSC Operation

Defense-in-depth SSCs are listed in WIPP RH Safety Analysis Report,[4] Chapter 6, Table 6-1. The applicable System Design Descriptions define defense-in-depth SSCs, describe their intended safety functions, and specify the requirements for design, operation, maintenance, testing, and calibration. WP 04-AD3001, Facility Mode Compliance [6], shall be implemented, and maintained to ensure that defense-in-depth SSCs are operated as required during each facility mode as described in Table 5-1.

5.2 Facility Operations Chain of Command and Responsibilities

Facility Manager (FM)

The FM shall be responsible for overall WIPP facility operation. The FM shall delegate in writing the succession to this responsibility during his/her absence. The Manager of the Operations Department of the Management and Operations Contractor (MOC) is the FM for the WIPP facility operation.

The Operations Department section managers are responsible for reporting plant status to the FM, and resolving issues as they arise.

Facility Shift Manager (FSM)

The FSM shall be responsible for operation of facility equipment and systems during normal and emergency situations. The FSM directs shift personnel through approved plans, procedures, and instructions. The FSM is the senior manager on shift during periods other than normal working hours, and reports to the FM through the organizational structure.

5.3 Facility Staffing Requirements

The MOC organizational structure, responsibilities, and staffing qualifications are described in Chapter 8 of the RH PSAR.[4] The minimum required operating staff to maintain the facility in a safe condition is specified below. The minimums are based on conducting WASTE HANDLING operations in parallel (e.g., surface WASTE HANDLING activities and underground WASTE HANDLING activities concurrently). In addition to the minimum operating staff, adequate staffing will be available to implement and maintain the TSR ACs.

5.3.1 WASTE STORAGE/DISPOSAL MODE Staffing Requirements

Facility Shift Manager (FSM)

Central Monitoring Room Operator (CMRO)

Surface Roving Watch

5.3.2 WASTE HANDLING MODE Staffing Requirements

After initiation of the WASTE HANDLING MODE, required personnel (over and above those required for WASTE STORAGE/DISPOSAL MODE) will only be necessary during actual WASTE HANDLING. These are facility staffing requirements and only need to be present as required for the WASTE HANDLING MODE. Planned breaks do not constitute a TSR VIOLATION.

One WASTE HANDLING Engineer is required on-site when WASTE HANDLING is in progress.

5.3.2.1 Staffing Requirements for WASTE HANDLING MODE in the WHB

Staffing requirements from WASTE STORAGE/DISPOSAL MODE plus:

Radiological Control Technician

Radiological Control Air Monitoring Technician (rover)

RH WASTE HANDLING Technicians (2) per process (72B or 10-160B)

During WASTE HANDLING surface activities (transport and processing), the WASTE HANDLING Engineer can simultaneously serve in the capacity of a WASTE HANDLING Technician.

5.3.2.2 Staffing Requirements for WASTE HANDLING MODE in the Underground

Staffing requirements from WASTE STORAGE/DISPOSAL MODE plus:

Radiological Control Technician (one for each WASTE HANDLING area)

WASTE HANDLING Technician (two for each underground 41 Ton Forklift in operation). When handling WASTE in the underground without the involvement of the 41 Ton Forklift, there shall be at least one WASTE HANDLING Technician.

During WASTE HANDLING underground activities (transport and emplacement), the WASTE HANDLING Engineer can simultaneously serve in the capacity of a WASTE HANDLING Technician.

Underground Facility Operations Engineer

Underground Roving Watch

Radiological Control Air Monitoring Technician Rover (performed at surface, only one required for WASTE HANDLING in either area).

5.4 Facility Staff Qualifications

Each member of the WIPP facility operation staff and technical support personnel shall meet or exceed the minimum qualifications as prescribed in job descriptions established and maintained under the direction of the manager of Human Resources.

5.5 Nuclear Review Board (NRB)

The NRB shall have a documented Charter and Scope as follows:

- Provide policy guidance in areas involving nuclear and/or occupational safety, and surety of TRU WASTE HANDLING/disposal operations,
- Conduct formal reviews of activities or issues having nuclear/occupational safety or environmental significance.

5.6 Reportable Occurrence Action

Procedures shall be established, implemented, and maintained for the administration of reportable occurrence actions.

5.7 TSR VIOLATIONS

Any of the following constitutes a TSR VIOLATION: (1) failure to establish, implement, or maintain a TSR AC required program; (2) failure to establish, implement, or maintain a TSR AC required procedure; and (3) systematic failure to comply with TSR AC programs or procedures. A procedure containing the following components shall be established, implemented, and maintained for the reporting of TSR AC VIOLATIONS:

1. Placing the facility in the WASTE STORAGE/DISPOSAL MODE
2. Reporting the VIOLATION in accordance with the above required reporting procedure
3. Preparing a recovery plan describing steps that will reinstate compliance with the TSR AC
4. Performing and documenting a technical evaluation, if appropriate, of the TSR AC VIOLATION to determine if an Unreviewed Safety Question exists

5.8 Revisions to the TSR

All proposed changes to the TSR shall be submitted to the DOE for approval prior to implementation of the revision.

5.9 Programs

5.9.1 Configuration Control

A Configuration Control Program and associated procedures shall be established, implemented, and maintained to control designs, modifications, and procurement to ensure that the WIPP facility remains consistent with the design features assumed in Section 5.2 of the RH PSAR.[4]

5.9.2 Document Control

A Document Control Program and associated procedures shall be established, implemented, and maintained to control WIPP documents. The program shall establish minimum review and approval requirements, change control, and minimum record retention requirements for the WIPP.

5.9.3 Maintenance

A Maintenance Program and associated procedures shall be established, implemented, and maintained to ensure that routine, corrective, and preventative maintenance, inspection, testing, and calibration activities are controlled.

5.9.4 Quality Assurance Program

A Quality Assurance Program and associated procedures shall be established, implemented, and maintained.

The basic elements of the Quality Assurance program should encompass, as applicable, work such as planning; training and personnel development; preparing, reviewing, approving, and verifying designs; qualifying suppliers; preparing, reviewing, approving, and issuing instructions, procedures, schedules, and procurement documents; purchasing; verifying supplier work; identifying and controlling hardware and software; manufacturing; managing and operating facilities; calibrating and controlling measuring and test equipment; conducting investigations and acquiring data; performing maintenance, repair, and improvements; performing assessments; and controlling records.

5.9.5 Procedures

Procedures shall be established, implemented, and maintained for WIPP TRU WASTE HANDLING and disposal related activities to ensure facility operations remain consistent with assumptions in Section 5.2 of the RH PSAR.[4]

5.9.6 Training

A Training Program for the WIPP facility operation staff and technical support personnel shall be established and maintained.

5.9.7 Conduct of Operations

The Conduct of Operations program shall contain elements of organization and administration of facility operations to ensure that a high level of operations is achieved through effective implementation and control of operations activities consistent with assumptions in Section 5.2 of the RH PSAR. [4]

Effective implementation and control of operating activities are primarily achieved through established written standards for operations, periodic monitoring and performance assessment, and holding personnel accountable for their performance.

The basic elements of the Conduct of Operations program should include, as applicable, guidance for: operations organization and administration; shift routines and operating practices; control area activities; communications; control of on-shift training; control of equipment and system status; lockouts and tagouts; independent verification; log keeping; operations turnover; timely orders to operators; operations procedures; operator aid postings; and equipment and piping labeling.

Preoperational and/or pre-evolutional checks shall be performed to ensure that WASTE HANDLING equipment (including waste hoist, and RH Bay bridge crane) operate as required prior to WASTE HANDLING activities.

5.9.8 Emergency Management

An Emergency Management Program and associated procedures shall be established, implemented, and maintained that provides preparedness, training, and operational response capabilities (including notification, evacuation and direct responses to events) to minimize consequences to workers and the public from accidents involving WIPP operations.

5.9.9 Radiation Protection

A Radiation Protection program and associated procedures shall be established, implemented, and maintained to ensure personnel radiation protection for all operations involving personnel radiation exposure.

The basic elements of the Radiation Protection program, as specified in the WIPP Radiological Protection Plan should encompass, as applicable, the specifications of: policy considerations and general facility design features employed to maintain radiation exposures ALARA; radiological control zoning and access control; radiation shielding; ventilation systems; differential pressure; radiation monitoring equipment, and effluent monitoring and sampling systems. The Radiation Protection Program shall also ensure consistency with the assumptions in Section 5.2 of the RH PSAR. [4]

5.9.10 WASTE Canister/Drum Integrity

Procedures shall be established, implemented, and maintained to ensure WASTE canister/drum integrity from the time a WASTE canister/drum is no longer sealed inside an authorized transport package (Road Cask) (DOT Type B) until it has been emplaced in the underground disposal area. Procedures shall also be established, implemented, and maintained to manage WASTE canister integrity of site-derived mixed WASTE.

The basic elements of this program should include the following requirements:

- Road Casks loaded with RH WASTE canisters/drums containing materials intended for disposal at the WIPP facility shall not be opened outside the designated WIPP Controlled Area (CA).

- RH WASTE canisters/drums loaded with materials intended for disposal at the WIPP shall not leave the boundaries of the CA unless they are inside a sealed Road Cask.

- RH WASTE canisters/drums shall be vented and meet certification requirements for DOT Type A or equivalent.

- RH WASTE canisters/drums received at the WIPP for disposal shall be isolated from the normal disposal processing if they are found to exceed any of the following criteria:

  1) The removable surface contamination limits of TSR 5.9.12.

  2) The surface contact dose rate limits of TSR 5.9.12.

  3) A known or suspected breach of canister/drum integrity

- All RH canisters/drums failing these criteria will be dealt with as follows:

  Decontaminated in accordance with the Radiological Control Plan, shielded to below 200 mRem/hr contact dose rate, or the RH canisters returned to the WASTE Generator.

5.9.11 Criticality Safety

The Criticality Safety program is established by implementing the following criticality safety configuration requirements which apply at all times:

RH WASTE package configuration:

- Fissile loading shall not exceed 325 Fissile-Gram Equivalent (FGE) for a RH waste canister.

- The maximum fissile loading will be no greater than 325 grams per ten foot RH waste canister as determined by the criticality analysis.

- No more than one RH waste canister will be present in the transfer cell at any given time.

- The RH waste canisters are to be stored in horizontal positions in the walls of the underground storage area within an analyzed minimum center-to-center spacing of 30 inches.

Associated procedures shall be established, implemented, and maintained to ensure the prevention of accidental criticality at the WIPP facility.

5.9.12 WASTE Characteristics

A WASTE Characterization Program shall ensure that only WASTE that is compatible with the design, operation, and long-term performance of the WIPP facility are shipped to WIPP, and that any exceptions are weighed against all applicable baseline documents prior to their authorization for shipment.

Procedures shall be established, implemented, and maintained to ensure that the following requirements apply to all WASTE that is to be shipped to and/or emplaced at the WIPP are implemented:

- The WASTE accepted for placement in the WIPP facility must conform with the following requirements unless an exception to the WAC has been approved as a result of examination in relation to the RH PSAR.[4] Specific criteria used in the development of the safety analysis are as follows:

  - Receipt of RH Waste
    1. RH WASTE shipments shall be received by truck only. Throughput of RH Waste Canisters is 693/year or less. This translates into 693 forklift operations per year.

  - WASTE Canisters/Drums
    1. RH waste canisters shall be noncombustible, vented and meet DOT Type A or equivalent certification requirements.

    2. Removable surface contamination criteria shall be consistent with the requirements of the DOE Radiological Control Standard, DOE-STD-1098-99[7].

  - Liquids
    1. Liquid waste will not be accepted at the WIPP. Only residual liquids in well-drained internal containers are allowed. The aggregate amount of residual liquid is limited to less than 1 volume percent of the external container.

  - Pyrophoric Materials
    1. No non-radionuclide pyrophorics permitted. Radionuclides in pyrophoric form are limited to <1% by weight in each WASTE package.

  - Explosives and Compressed Gases
    1. No explosives or compressed gases are permitted.

  - TRU Mixed WASTE
    1. TRU WASTE shall contain no hazardous WASTE unless they exist as co-contaminants with transuranics.
    2. Characteristic ignitable (D001), corrosive (D002), and reactive (D003) WASTE are not acceptable at WIPP.

  - Nuclear Criticality (Pu-239 FGE)
    1. Accepted package limits, including allowances for measurement error, is ≤ 325 FGE per 10 foot RH WASTE canister

  - Pu-239 Equivalent Activity 72B Cask
    1. ≤ 80 PE-Ci/direct loaded RH canister
    2 . ≤ 240 PE-Ci/three 55-gal drum loaded RH canister

  - Pu-239 Equivalent Activity 10-160B Cask
    1. ≤ 20 PE-Ci/cask
    2 . ≤ 60 PE-Ci/ loaded Facility canister

  - Gas Generation
    1. All RH WASTE canisters shall be vented.

- Surface Dose Rate
  1. Surface dose rate for a Road Cask or Facility Cask shall be no greater than 200 mRem/hr.

- Radioactive mixed WASTE to be emplaced at WIPP shall be managed in accordance with the applicable requirements of the Hazardous Waste Facility Permit[8] issued by the state of New Mexico.

5.9.13 Unreviewed Safety Questions

An Unreviewed Safety Question program and associated procedures shall be established, implemented, and maintained that maintains the facility consistent with the RH PSAR[4] and credited design features.

5.9.14 Geotechnical Monitoring

A geotechnical monitoring program shall be established, implemented, and maintained to characterize, monitor and trend salt behavior that might result in a roof fall in open WASTE disposal panels or rooms in the underground, so that remedial actions may be formulated as deemed necessary.

5.9.15 Fire Protection

A Fire Protection Program shall be in place to ensure that combustible loadings (including transient combustibles) in areas not defined as processing areas within the WHB will not have sufficient energy for a fire to propagate to areas defined as processing areas. The Fire protection program will provide for inspections to ensure the combustible loading is maintained at acceptable levels.

The Fire Protection Program will ensure that ignition sources within the Hot Cell are limited to reduce the probability of a fire in the Hot Cell.

5.9.16 Waste Hoist (designated Safety Significant) Performance

Procedures shall be established, implemented, and maintained to ensure that the following requirements are established for Waste Hoist (designated Safety Significant) operations:

- Preoperational tests of the Waste Hoist (designated Safety Significant) shall be performed on each shift prior to transporting Waste.
- Planned mission time for the Waste Hoist is 1000 hrs/year or less (i.e., 7,000 round trips per year).

6 References

1 DOE Order 5480.22, Technical Safety Requirements, September, 1992 (For reference only, superceded by 10 CFR 830.205).

2 10 CFR 830.205, Technical Safety Requirements, January, 2001.

3 DOE G 423.1-1, Implementation Guide For Use In Developing Technical Safety Requirements, October, 2001.

4 WIPP RH Safety Analysis Report, DOE/WIPP-DRAFT-3174.

5 WIPP-DOE-RH DRAFT, Waste Acceptance Criteria for the Waste Isolation Pilot Plant, Rev. as updated for RH.

6 WP 04-AD3001, Facility Mode Compliance

7 DOE-STD-1098-99, DOE Radiological Control Standard.

8 Hazardous Waste Facility Permit No. NM4890239088-TSDF, issued by the New Mexico Environment Department October 27, 1999.

Table 5-1, Summary of Applicability of Defense-In-Depth SSCs to WIPP MODEs **Page 1 of 1**

Defense-In-Depth SSCs	WASTE HANDLING MODE		WASTE STORAGE/DISPOSAL MODE	
	WHB	Underground	WHB	Underground
WHB RH facilities HVAC System (excluding Hot Cell ventilation system unless waste is being processed or stored in the Hot Cell)	X		X*	
Waste Hoist (including Brake System - when required to transport waste)	X	X		
WASTE HANDLING equipment (including the Facility Cask loading Grapple, Grapple Hoist System including brakes, RH Bay Bridge Crane, forklifts, HERE, Facility Cask Rotating Device, Facility Cask Transfer Cars, Lifting Fixture, etc.) as required during WASTE HANDLING operations only)	X	X		
WHB structure (including Hot Cell with thermal detector) and tornado Doors	X		X*	
Underground Ventilation and Filtration System		X		X
Radiation Monitoring System (active waste disposal room exit alpha Continuous Air Monitor [CAM] for underground shift to filtration)		X		X
Devices to restrict operations including Shield Door and Crane Interlock, Crane and Hot Cell Shield Valve Interlock, Torque limiter on shield valve motor, Force Limiter on Swipe Arm, and Robotic Arm Collision Detector	X			
Central Monitoring System to support underground shift to filtration		X		X

*Note that no defense-in-depth operational requirements apply to the WHB when no WASTE is present.

Following failure of a required SSC, the facility will be placed in the WASTE STORAGE/DISPOSAL MODE. During the time required to effect the required repairs, the facility is not in violation of the PTSR.

APPENDIX A BASES

This appendix is utilized to provide summary statements of the reasons for the OPERATIONAL LIMITS and the associated SRs. No OPERATIONAL LIMITS or associated SRs have been identified for the WIPP. Accordingly, no BASES statements are presented in this appendix.

This page intentionally left blank

APPENDIX B DESIGN FEATURES

The provisions of the DESIGN FEATURES are included in the WIPP RH PSAR[2], Chapter 4. As stated in DOE Order 5480.22, Attachment 1, paragraph 2.6, this DESIGN FEATURES appendix is not needed.

This page intentionally left blank