METHOD TO-1 Revision 1.0
April, 1984

METHOD FOR THE DETERMINATION OF VOLATILE ORGANIC COMPOUNDS IN AMBIENT AIR USING TENAX® ADSORPTION AND GAS CHROMATOGRAPHY/MASS SPECTROMETRY (GC/MS)

1. Scope

1.1 The document describes a generalized protocol for collection and determination of certain volatile organic compounds which can be captured on Tenax® GC (poly(2,6-Diphenyl phenylene oxide)) and determined by thermal desorption GC/MS techniques. Specific approaches using these techniques are described in the literature (1-3).

1.2 This protocol is designed to allow some flexibility in order to accommodate procedures currently in use. However, such flexibility also results in placement of considerable responsibility with the user to document that such procedures give acceptable results (i.e., documentation of method performance within each laboratory situation is required). Types of documentation required are described elsewhere in this method.

1.3 Compounds which can be determined by this method are nonpolar organics having boiling points in the range of approximately 80° - 200°C. However, not all compounds falling into this category can be determined. Table 1 gives a listing of compounds for which the method has been used. Other compounds may yield satisfactory results but validation by the individual user is required.

2. Applicable Documents

2.1 ASTM Standards:

D1356 Definitions of Terms Related to Atmospheric Sampling and Analysis.
E355 Recommended Practice for Gas Chromatography Terms and Relationships.

2.2 Other documents:

Existing procedures (1-3).

U. S. EPA Technical Assistance Document (4).

3. Summary of Protocol

3.1 Ambient air is drawn through a cartridge containing ~1-2 grams of Tenax and certain volatile organic compounds are trapped on the resin while highly volatile organic compounds and most inorganic atmospheric constituents pass through the cartridge. The cartridge is then transferred to the laboratory and analyzed.

3.2 For analysis the cartridge is placed in a heated chamber and purged with an inert gas. The inert gas transfers the volatile organic compounds from the cartridge onto a cold trap and subsequently onto the front of the GC column which is held at low temperature (e.g., -70°C). the GC column temperature is then increased (temperature programmed) and the components eluting from the column are identified and quantified by mass spectrometry. Component identification is normally accomplished, using a library search routine, on the basis of the GC retention time and mass spectral characteristics. Less sophisticated detectors (e.g., electron capture or flame ionization) may be used for certain applications but their suitability for a given application must be verified by the user.

3.3 Due to the complexity of ambient air samples only high resolution (i.e., capillary) GC techniques are considered to be acceptable in this protocol.

4. Significance

4.1 Volatile organic compounds are emitted into the atmosphere from a variety of sources including industrial and commercial facilities, hazardous waste storage facilities, etc. Many of these compounds are toxic; hence knowledge of the levels of such materials in the ambient atmosphere is required in order to determine human health impacts.

4.2 Conventional air monitoring methods (e.g., for workspace monitoring) have relied on carbon adsorption approaches with subsequent solvent desorption. Such techniques allow subsequent injection of only a small portion, typically 1-5% of the sample onto the GC system. However, typical ambient air concentrations of these compounds require a more sensitive approach. The thermal

desorption process, wherein the entire sample is introduced into the analytical (GC/MS) system fulfills this need for enhanced sensitivity.

5. Definitions

Definitions used in this document and any user prepared SOPs should be consistent with ASTM D1356(6). All abbreviations and symbols are defined with this document at the point of use.

6. Interferences

6.1 Only compounds having a similar mass spectrum and GC retention time compared to the compound of interest will interface in the method. The most commonly encountered interferences are structural isomers.

6.2 Contamination of the Tenax cartridge with the compound(s) of interest is a commonly encountered problem in the method. The user must be extremely careful in the preparation, storage, and handling of the cartridges throughout the entire sampling and analysis process to minimize this problem.

7. Apparatus

7.1 Gas Chromatograph/Mass Spectrometry system - should be capable of subambient temperature programming. Unit mass resolution or better up to 800 amu. Capable of scanning 30-400 amu region every 0.5-1 second. Equipped with data system for instrument control as well as data acquisition, processing and storage.

7.2 Thermal Desorption Unit - Designed to accommodate Tenax cartridges in use. See Figure 2a or b.

7.3 Sampling System - Capable of accurately and precisely drawing an air flow of 10-500 ml/minute through the Tenax cartridge. (See Figure 3a or b.)

7.4 Vacuum oven - connected to water aspirator vacuum supply.

7.5 Stopwatch.

7.6 Pyrex disks - for drying Tenax.

7.7 Glass jar - Capped with Teflon-lined screw cap. For storage of purified Tenax.

7.8 Powder funnel - for delivery of Tenax into cartridges.

7.9 Culture tubes - to hold individual glass Tenax cartridges.

7.10 Friction top can (paint can) - to hold clean Tenax cartridges.

7.11 Filter holder - stainless steel or aluminum (to accommodate 1 inch diameter filter). Other sizes may be used if desired. (optional)

7.12 Thermometer - to record ambient temperature.

7.13 Barometer (optional).

7.14 Dilution bottle - Two-liter with septum cap for standards preparation.

7.15 Teflon stirbar - 1 inch long.

7.16 Gas-tight glass syringes with stainless steel needles - 10-500 µl for standard injection onto GC/MS system.

7.17 Liquid microliter syringes - 5.50 µL for injecting neat liquid standards into dilution bottle.

7.18 Oven - 60 ± 5°C for equilibrating dilution flasks.

7.19 Magnetic stirrer.

7.20 Heating mantel.

7.21 Variac

7.22 Soxhlet extraction apparatus and glass thimbles - for purifying Tenax.

7.23 Infrared lamp - for drying Tenax.

7.24 GC column - SE-30 or alternative coating, glass capillary or fused silica.

7.25 Psychrometer - to determine ambient relative humidity. (optional)

8. Reagents and Materials

8.1 Empty Tenax cartridges - glass or stainless steel (see Figure 1a or b).

8.2 Tenax 60/80 mesh (2,6-diphenylphenylene oxide polymer).

8.3 Glasswool - silanized.

8.4 Acetone - Pesticide quality or equivalent.

8.5 Methanol - Pesticide quality or equivalent.

8.6 Pentane - Pesticide quality or equivalent.

8.7 Helium - Ultra pure, compressed gas. (99.9999%)

8.8 Nitrogen - Ultra pure, compressed gas. (99.9999%)

8.9 Liquid nitrogen.

8.10 Polyester gloves - for handling glass Tenax cartridges.

8.11 Glass Fiber Filter - one inch diameter, to fit in filter holder. (optional)

8.12 Perfluorotributylamine (FC-43).

8.13 Chemical Standards - Neat compounds of interest. Highest purity available.

8.14 Granular activated charcoal - for preventing contamination of Tenax cartridges during storage.

9. Cartridge Construction and Preparation

9.1 Cartridge Design

9.1.1 Several cartridge designs have been reported in the literature (1-3). The most common (1) is shown in Figure 1a. This design minimizes contact of the sample with metal surfaces, which can lead to decomposition in certain cases. However, a disadvantage of this design is the need to rigorously avoid contamination of the <u>outside</u> portion of the cartridge since the entire surface is subjected to the purge gas stream during the desorption process. Clean polyester gloves must be worn at all

times when handling such cartridges and exposure of the open cartridge to ambient air must be minimized.

9.1.2 A second common type of design (3) is shown in Figure 1b. While this design uses a metal (stainless steel) construction, it eliminates the need to avoid direct contact with the exterior surface since only the interior of the cartridge is purged.

9.1.3 The thermal desorption module and sampling system must be selected to be compatible with the particular cartridge design chosen. Typical module designs are shown in Figure 2a and b. These designs are suitable for the cartridge designs shown in Figures 1a and b, respectively.

9.2 Tenax Purification

9.2.1 Prior to use the Tenax resin is subjected to a series of solvent extraction and thermal treatment steps. The operation should be conducted in an area where levels of volatile organic compounds (other than the extraction solvents used) are minimized.

9.2.2 All glassware used in Tenax purification as well as cartridge materials should be thoroughly cleaned by water rinsing followed by an acetone rinse and dried in an oven at 250°C.

9.2.3 Bulk Tenax is placed in a glass extraction thimble and held in place with a plug of clean glasswool. The resin is then placed in the soxhlet extraction apparatus and extracted sequentially with methanol and then pentane for 16-24 hours (each solvent) at approximately 6 cycles/hour. Glasswool for cartridge preparation should be cleaned in the same manner as Tenax.

9.2.4 The extracted Tenax is immediately placed in an open glass dish and heated under an infrared lamp for two hours in a hood. Care must be exercised to avoid over heating of the Tenax by the infrared lamp. The Tenax is then placed in a vacuum oven (evacuated using a

water aspirator) without heating for one hour. An inert gas (helium or nitrogen) purge of 2-3 ml/minute is used to aid in the removal of solvent vapors. The oven temperature is then increased to 110°C, maintaining inert gas flow and held for one hour. The oven temperature control is then shut off and the oven is allowed to cool to room temperature. Prior to opening the oven, the oven is slightly pressurized with nitrogen to prevent contamination with ambient air. The Tenax is removed from the oven and sieved through a 40/60 mesh sieve (acetone rinsed and oven dried) into a clean glass vessel. If the Tenax is not to be used immediately for cartridge preparation it should be stored in a clean glass jar having a Teflon-lined screw cap and placed in a desiccator.

9.3 Cartridge Preparation and Pretreatment

9.3.1 All cartridge materials are pre-cleaned as described in Section 9.2.2. If the glass cartridge design shown in Figure 1a is employed all handling should be conducted wearing polyester gloves.

9.3.2 The cartridge is packed by placing a 0.5-lcm glasswool plug in the base of the cartridge and then filling the cartridge to within approximately 1 cm of the top. A 0.5-1cm glasswool plug is placed in the top of the cartridge.

9.3.3 The cartridges are then thermally conditioned by heating for four hours at 270°C under an inert gas (helium) purge (100 - 200 ml/min).

9.3.4 After the four hour heating period the cartridges are allowed to cool. Cartridges of the type shown in Figure 1a are immediately placed (without cooling) in clean culture tubes having Teflon-lined screw caps with a glasswool cushion at both the top and the bottom. Each tube should be shaken to ensure that the cartridge is held firmly in place. Cartridges of the type shown in Figure 1b are allowed to cool to room temperature under inert gas purge and are then closed with stainless steel plugs.

9.3.5 The cartridges are labeled and placed in a tightly sealed metal can (e.g., paint can or similar friction top container). For cartridges of the type shown in Figure 1a the culture tube, not the cartridge, is labeled.

9.3.6 Cartridges should be used for sampling within 2 weeks after preparation and analyzed within two weeks after sampling. If possible the cartridges should be stored at -20°C in a clean freezer (i.e., no solvent extracts or other sources of volatile organics contained in the freezer).

10. Sampling

10.1 Flow Rate and Total Volume Selection

10.1.1 Each compound has a characteristic retention volume (liters of air per gram of adsorbent) which must not be exceeded. Since the retention volume is a function of temperature, and possibly other sampling variables, one must include an adequate margin of safety to ensure good collection efficiency. Some considerations and guidance in this regard areprovided in a recent report (5). Approximate breakthrough volumes at 38°C (100°F) in liters/gram of Tenax are provided in Table 1. These retention volume data are supplied only as rough guidance and are subject to considerable variability, depending on cartridge design as well as sampling parameters and atmospheric conditions.

10.1.2 To calculate the maximum total volume of air which can be sampled use the following equation:

$$V_{MAX} = \frac{V_b x W}{1.5}$$

where

V_{MAX} is the calculated maximum total volume in liters.

V_b is the breakthrough volume for the least retained compound of interest (Table 1) in liters per gram of Tenax.

W is the weight of Tenax in the cartridge, in grams.

1.5 is a dimensionless safety factor to allow for variability in atmospheric conditions. This factor is appropriate for temperatures in the range of 25-30°C. If higher temperatures are encountered the factor should be increased (i.e. maximum total volume decreased).

10.1.3 To calculate maximum flow rate use the following equation:

$$Q_{MAX} = \frac{V_{MAX}}{t} x 1000$$

where

Q_{MAX} is the calculated maximum flow rate in milliliters per minute.

t is the desired sampling time in minutes. Times greater than 24 hours (1440 minutes) generally are unsuitable because the flow rate required is too low to be accurately maintained.

10.1.4 The maximum flow rate Q_{MAX} should yield a linear flow velocity of 50-500 cm/minute. Calculate the linear velocity corresponding to the maximum flow rate using the following equation:

$$B = \frac{Q_{MAX}}{\mathrm{B} r^2}$$

where

B is the calculated linear flow velocity in centimeters per minute.

r is the internal radius of the cartridge in centimeters.

If B is greater then 500 centimeters per minute either the total sample flow rate (V_{MAX}) should be reduced or the sample flow rate (Q_{MAX}) should be reduced by increasing the collection time. If B is less then 50 centimeters per minute the sampling rate (Q_{MAX}) should be increased by reducing the sampling time. The total sample value (V_{MAX}) cannot be increased due to component breakthrough.

10.1.5 The flow rate calculated as described above defines the maximum flow rate allowed. In general, one should collect additional samples in parallel, for the same time period but at lower flow rates. This practice yields a measure of quality control and is further discussed in the literature (5). In general, flow rates 2 to 4 fold lower than the maximum flow rate should be employed for the parallel samples. In all cases a constant flow rate should be achieved for each cartridge since accurate integration of the analyte concentration requires that the flow be constant over the sampling period.

10.2 Sample Collection

10.2.1 Collection of an accurately known volume of air is critical to the accuracy of the results. For this reason the use of mass flow controllers, rather than conventional needle valves or orifices is highly recommended, especially at low flow velocities (e.g., less than 100 milliliters/minute). Figure 3a illustrates a sampling system utilizing mass flow controllers. This system readily allows for collection of parallel samples. Figure 3b shows a commercially available system based on needle valve flow controllers.

10.2.2 Prior to sample collection insure that the sampling flow rate has been calibrated over a range including the rate to be used for sampling, with a "dummy" Tenax cartridge in place. Generally calibration is accomplished using a soap bubble flow meter or calibrated wet test meter. The flow calibration device is connected to the flow exit, assuming the entire flow system is sealed. ASTM Method D3686 describes an appropriate calibration scheme, not requiring a sealed flow system downstream of the pump.

10.2.3 The flow rate should be checked before and after each sample collection. If the sampling interval exceeds four hours the flow rate should be checked at an intermediate point during sampling as well. In general, a rotameter should be included, as shown in Figure 3b, to allow observation of the sampling flow rate without disrupting the sampling process.

10.2.4 To collect an air sample the cartridges are removed from the sealed container just prior to initiation of the collection process. If glass cartridges (Figure 1a) are employed they must be handled only with polyester gloves and should not contact any other surfaces.

10.2.5 A particulate filter and holder are placed on the inlet to the cartridges and the exit end of the cartridge is connected to the sampling apparatus. In many sampling situations the use of a filter is not necessary if only the total concentration of a component is desired. Glass cartridges of the type shown in Figure 1a are connected using teflon ferrules and Swagelok (stainless steel or teflon) fittings. Start the pump and record the following parameters on an appropriate data sheet (Figure 4): data, sampling location, time, ambient temperature, barometric pressure, relative humidity, dry gas meter reading (if applicable), flow rate, rotameter reading (if applicable), cartridge number and dry gas meter serial number.

10.2.6 Allow the sampler to operate for the desired time, periodically recording the variables listed above. Check flow rate at the midpoint of the sampling interval if longer than four hours. At the end of the sampling period record the parameters listed in 10.2.5 and check the flow rate and record the value. If the flows at the beginning and end of the sampling period differ by more than 10% the cartridge should be marked as suspect.

10.2.7 Remove the cartridges (one at a time) and place in the original container (use gloves for glass cartridges). Seal the cartridges or culture tubes in the friction-top can containing a layer of charcoal and package for immediate shipment to the laboratory for analysis. Store cartridges at reduced temperature (e.g., -20°C) before analysis if possible to maximize storage stability.

10.2.8 Calculate and record the average sample rate for each cartridge according to the following equation:

$$Q_A = \frac{Q_1 + Q_2 + \ldots Q_N}{N}$$

where

Q_A = Average flow rate in ml/minute.
Q_1, Q_2, ... Q_N = Flow rates determined at beginning, end, and intermediate points during sampling.
N = Number of points averaged.

10.2.9 Calculate and record the total volumetric flow for each cartridge using the following equation:

$$V_m = \frac{T \times Q_A}{1000}$$

where

V_m = Total volume sampled in liters at measured temperature and pressure.
T_2 = Stop time.
T_1 = Start time.
T = Sampling time = T_2 = T_1, minutes

10.2.10 The total volume (V_s) at standard conditions, 25°C and 760 mmHg, is calculated from the following equation:

$$V_s = V_m \times \frac{P_A}{760} \times \frac{298}{273 + t_A}$$

where

P_A = Average barometric pressure, mmHg
t_A = Average ambient temperature, °C.

11. GC/MS Analysis

11.1 Instrument Set-up

11.1.1 Considerable variation from one laboratory to another is expected in terms of instrument configuration. Therefore each laboratory must be responsible for verifying that their particular system yields satisfactory results. Section 14 discusses specific performance criteria which should be met.

11.1.2 A block diagram of the typical GC/MS system required for analysis of Tenax cartridges is depicted in Figure 5. The operation of such devices is described in 11.2.4. The thermal desorption module must be designed to accommodate the particular cartridge configuration. Exposure of the sample to metal surfaces should be minimized and only stainless steel, or nickel metal surfaces should be employed. The volume of tubing and fittings leading from the cartridge to the GC column must be minimized and all areas must be well-swept by helium carrier gas.

11.1.3 The GC column inlet should be capable of being cooled to -70°C and subsequently increased rapidly to approximately 30°C. This can be most readily accomplished using a GC equipped with subambient cooling capability (liquid nitrogen) although other approaches such as manually cooling the inlet of the column in liquid nitrogen may be acceptable.

11.1.4 The specific GC column and temperature program employed will be dependent on the specific compounds of interest. Appropriate conditions are described in the literature (1-3). In general a nonpolar stationary phase (e.g., SE-30, OV-1) temperature programmed from 30°C to 200°C at 8°/minute will be suitable. Fused silica bonded phase columns are preferable to glass columns since they are more rugged and can be inserted directly into the MS ion source, thereby eliminating the need for a GC/MS transfer line.

11.1.5 Capillary column dimensions of 0.3 mm ID and 50 meters long are generally appropriate although shorter lengths may be sufficient in many cases.

11.1.6 Prior to instrument calibration or sample analysis the GC/MS system is assembled as shown in Figure 5. Helium purge flows (through the cartridge) and carrier flow are set at approximately 10 ml/minute and 1-2 ml/minute respectively. If applicable, the injector sweep flow is set at 2-4 ml/minute.

11.1.7 Once the column and other system components are assembled and the various flows established the column temperature is increased to 250°C for approximately four hours (or overnight if desired) to condition the column.

11.1.8 The MS and data system are set according to the manufacturer's instructions. Electron impact ionization (70eV) and an electron multiplier gain of approximately 5×10^4 should be employed. Once the entire GC/MS system has been setup the system is calibrated as described in Section 11.2. The user should prepare a detailed standard operating procedure (SOP) describing this process for the particular instrument being used.

11.2 Instrument Calibration

11.2.1 Tuning and mass standardization of the MS system is performed according to manufacturer's instructions and relevant information from the user prepared SOP. Perfluorotributylamine should generally be employed for this purpose. The material is introduced directly into the ion source though a molecular leak. The instrumental parameters (e.g., lens voltages, resolution, etc.) should be adjusted to give the relative ion abundances shown in Table 2 as well as acceptable resolution and peak shape. If these approximate relative abundances cannot be achieved, the ion source may require cleaning according to manufacturer's instructions. In the event that the user's instrument cannot achieve these relative ion abundances, but is otherwise operating properly, the user may adopt another set of relative abundances as performance criteria. However, these alternate values must be repeatable on a day-to-day basis.

11.2.2 After the mass standardization and tuning process has been completed and the appropriate values entered into the data system the user should then calibrate the entire system by introducing known quantities of the standard components of interest into the system. Three alternate procedures may be employed for the calibration process including 1) direct syringe injection of dilute vapor phase standards, prepared in a dilution bottle, onto the GC column, 2) injection of dilute vapor phase standards into a carrier gas stream directed through the Tenax cartridge, and 3) introduction of permeation or diffusion tube standards onto a Tenax cartridge. The standards preparation procedures for each of these approaches are described in Section 13. The following paragraphs describe the instrument calibration process for each of these approaches.

11.2.3 If the instrument is to be calibrated by direct injection of a gaseous standard, a standard is prepared in a dilution bottle as described in Section 13.1. The GC column is cooled to -70°C (or, alternately, a portion of the column inlet is manually cooled with liquid nitrogen). The MS and data system is set up for acquisition as described in the relevant user SOP. The ionization filament should be turned off during the initial 2-3 minutes of the run to allow oxygen and other highly volatile components to elute. An appropriate volume (less than 1 ml) of the gaseous standard is injected onto the GC system using an accurately calibrated gas tight syringe. The system clock is started and the column is maintained at -70°C (or liquid nitrogen inlet cooling) for 2 minutes. The column temperature is rapidly increased to the desired initial temperature (e.g., 30°C). The temperature program is started at a consistent time (e.g., four minutes) after injection. Simultaneously the ionization filament is turned on and data acquisition is initiated. After the last component of interest has eluted acquisition is terminated and the data is processed as described in Section 11.2.5. The standard injection process is repeated using different standard volumes as desired.

11.2.4 If the system is to be calibrated by analysis of spiked Tenax cartridges a set of cartridges is prepared as described in Sections 13.2 or 13.3. Prior to analysis the cartridges are stored as described in Section 9.3. If glass cartridges (Figure 1a) are employed care must be taken to avoid direct contact, as described earlier. The GC column is cooled to -70°C, the collection loop is immersed in liquid nitrogen and the desorption module is maintained at 250°C. The inlet valve is placed in the desorb mode and the standard cartridge is placed in the desorption module, making certain that no leakage or purge gas occurs. The cartridge is purged for 10 minutes and then the inlet valve is placed in the inject mode and the liquid nitrogen source removed from the collection trap. The GC column is maintained at -70°C for two minutes and subsequent steps are as described in 11.2.3. After the process is complete the cartridge is removed from the desorption module and stored for subsequent use as described in Section 9.3.

11.2.5 Data processing for instrument calibration involves determining retention times, and integrated characteristic ion intensities for each of the compounds of interest. In addition, for at least one chromatographic run, the individual mass spectra should be inspected and compared to reference spectra to ensure proper instrumental performance. Since the steps involved in data processing are highly instrument specific, the user should prepare a SOP describing the process for individual use. Overall performance criteria for instrument calibration are provided in Section 14. If these criteria are not achieved the user should refine the instrumental parameters and/or operating procedures to meet these criteria.

11.3 Sample Analysis

11.3.1 The sample analysis process is identical to that described in Section 11.2.4 for the analysis of standard Tenax cartridges.

11.3.2 Data processing for sample data generally involves 1) qualitatively determining the presence or absence of each component of interest on the basis of a set of characteristic ions and the retention time using a reverse-search software routine, 2) quantification of each identified component by integrating the intensity of a characteristic ion and comparing the value to that of the calibration standard, and 3) tentative identification of other components observed using a forward (library) search software routine. As for other user specific processes, a SOP should be prepared describing the specific operations for each individual laboratory.

12. Calculations

12.1 Calibration Response Factors

12.1.1 Data from calibration standards is used to calculate a response factor for each component of interest. Ideally the process involves analysis of at least three calibration levels of each component during a given day and determination of the response factor (area/nanogram injected) from the linear least squares fit of a plot of nanograms injected versus area (for the characteristic ion). In general quantities of component greater than 1000 nanograms should not be injected because of column overloading and/or MS response nonlinearity.

12.1.2 In practice the daily routine may not always allow analysis of three such calibration standards. In this situation calibration data from consecutive days may be pooled to yield a response factor, provided that analysis of replicate standards of the same concentration are shown to agree within 20% on the consecutive days. One standard concentration, near the midpoint of the analytical range of interest, should be chosen for injection every day to determine day-to-day response reproducibility.

12.1.3 If substantial nonlinearity is present in the calibration curve a nonlinear least squares fit (e.g., quadratic) should be employed. This process involves fitting the data to the following equation:

$$Y = A + BX + CX^2$$

where

Y = peak area
X = quantity of component, nanograms
A, B, and C are coefficients in the equation

12.2 Analyte Concentrations

12.2.1 Analyte quantities on a sample cartridge are calculated from the following equation:

$$Y_A = A + BX_A + CX_A$$

where

Y_A is the area of the analyte characteristic ion for the sample cartridge.
X_A is the calculated quantity of analyte on the sample cartridge, in nanograms.
A, B, and C are the coefficients calculated from the calibration curve described in Section 12.1.3.

12.2.2 If instrumental response is essentially linear over the concentration range of interest a linear equation (C=O in the equation above) can be employed.

12.2.3 Concentration of analyte in the original air sample is calculated from the following equation:

$$C_A = \frac{X_A}{V_S}$$

where

C_A is the calculated concentration of analyte in nanograms per liter.
V_S and X_A are as previously defined in Section 10.2.10 and 12.2.1, respectively.

13. Standard Preparation

13.1 Direct Injection

13.1.1 This process involves preparation of a dilution bottle containing the desired concentrations of compounds of interest for direct injection onto the GC/MS system.

13.1.2 Fifteen three-millimeter diameter glass beads and a one-inch Teflon stirbar are placed in a clean two-liter glass septum capped bottle and the exact volume is determined by weighing the bottle before and after filling with deionized water. The bottle is then rinsed with acetone and dried at 200°C.

13.1.3 The amount of each standard to be injected into the vessel is calculated from the desired injection quantity and volume using the following equation:

$$W_T = \frac{W_I}{V_I} \times V_B$$

where

W_T is the total quantity of analyte to be injected into the bottle in milligrams

W_I is the desired weight of analyte to be injected onto the GC/MS system or spiked cartridge in nanograms

V_I is the desired GC/MS or cartridge injection volume (should not exceed 500) in microliters.

V_B is total volume of dilution bottle determined in 13.1.1, in liters.

13.1.4 The volume of the neat standard to be injected into the dilution bottle is determined using the following equation:

$$V_T = \frac{W_T}{d}$$

where

V_T is the total volume of neat liquid to be injected in microliters.

d is the density of the neat standard in grams per milliliter.

13.1.6 The bottle is placed in a 60°C oven for at least 30 minutes prior to removal of a vapor phase standard.

13.1.7 To withdraw a standard for GC/MS injection the bottle is removed from the oven and stirred for 10-15 seconds. A suitable gas-tight microber syringe, warmed to 60°C, is inserted through the septum cap and pumped three times slowly. The appropriate volume of sample (approximately 25% larger than the desired injection volume) is drawn into the syringe and the volume is adjusted to the exact value desired and then immediately injected over a 5-10 seconds period onto the GC/MS system as described in Section 11.2.3.

13.2 Preparation of Spiked Cartridges by Vapor Phase Injection

13.2.1 This process involves preparation of a dilution bottle containing the desired concentrations of the compound(s) of interest as described in 13.1 and injecting the desired volume of vapor into a flowing inert gas stream directed through a clean Tenax cartridge.

13.2.2 A helium purge system is assembled wherein the helium flow 20-30 mL/minute is passed through a stainless steel Tee fitted with a septum injector. The clean Tenax cartridge is connected downstream of the tee using appropriate Swagelok fittings. Once the cartridge is placed in the flowing gas stream the appropriate volume vapor standard, in the dilution bottle, is injected through the septum as described in 13.1.6. The syringe is flushed several times by alternately filling the syringe with carrier gas and displacing the contents into the flow stream, without removing the syringe from the septum. Carrier flow is maintained through the cartridge for approximately 5 minutes after injection.

13.3 Preparation of Spiked Traps Using Permeation or Diffusion Tubes

13.3.1 A flowing stream of inert gas containing known amounts of each compound of interest is generated according to ASTM Method D3609(6).

Note that a method of accuracy maintaining temperature within ± 0.1°C is required and the system generally must be equilibrated for at least 48 hours before use.

13.3.2 An accurately known volume of the standard gas stream (usually 0.1-1 liter) is drawn through a clean Tenax cartridge using the sampling system described in Section 10.2.1, or a similar system. However, if mass flow controllers are employed they must be calibrated for the carrier gas used in Section

13.3.1 (usually nitrogen). Use of air as the carrier gas for permeation systems is not recommended, unless the compounds of interest are known to be highly stable in air.

13.3.3 The spiked cartridges are then stored or immediately analyzed as in Section 11.2.4.

14. Performance Criteria and Quality Assurance

This section summarizes quality assurance (QA) measures and provides guidance concerning performance criteria which should be achieved within each laboratory. In many cases the specific QA procedures have been described within the appropriate section describing the particular activity (e.g., parallel sampling).

14.1 Standard Operating Procedures (SOPs)

14.1.1 Each user should generate SOPs describing the following activities as they are performed in their laboratory:

1) assembly, calibration, and operation of the sampling system,
2) preparation, handling and storage of Tenax cartridges,
3) assembly and operation of GC/MS system including the thermal desorption apparatus and data system, and
4) all aspects of data recording and processing.

14.1.2 SOPs should provide specific stepwise instructions and should be readily available to, and understood by, the laboratory personnel conducting the work.

14.2 Tenax Cartridges Preparation

14.2.1 Each batch of Tenax cartridges prepared (as described in Section 9) should be checked for contamination by analyzing one cartridge immediately after preparation. While analysis can be accomplished by GC/MS, many laboratories may choose to use GC/FID due to logistical and cost considerations.

14.2.2. Analysis by GC/FID is accomplished as described for GC/MS (Section 11) except for use of FID detection.

14.2.3 While acceptance criteria can vary depending on the components of interest, at a minimum the clean cartridge should be demonstrated to contain less than one fourth of the minimum level of interest for each component. For most compounds the blank level should be less than 10 nanograms per cartridge in order to be acceptable. More rigid criteria may be adopted, if necessary, within a specific laboratory. If a cartridge does not meet these acceptance criteria the entire lot should be rejected.

14.3 Sample Collection

14.3.1 During each sampling event at least one clean cartridge will accompany the samples to the field and back to the laboratory, without being used for sampling, to serve as a field blank. The average amount of material found on the field blank cartridge may be subtracted from the amount found on the actual samples. However, if the blank level is greater than 25% of the sample amount, data for that component must be identified as suspect.

14.3.2 During each sampling event at least one set of parallel samples (two or more samples collected simultaneously) will be collected, preferably at different flow rates as described in Section 10.1. If agreement between parallel samples is not generally within $\pm$ 25% the user should collect parallel samples on a much more frequent basis (perhaps for all sampling points). If a trend of lower apparent concentrations with increasing flow

rate is observed for a set of parallel samples one should consider using a reduced flow rate and longer sampling interval if possible. If this practice does not improve the reproducibility further evaluation of the method performance for the compound of interest may be required.

14.3.3 Backup cartridges (two cartridges in series) should be collected with each sampling event. Backup cartridges should contain less than 20% of the amount of components of interest found in the front cartridges, or be equivalent to the blank cartridge level, whichever is greater. The frequency of use of backup cartridges should be increased if increased flow rate is shown to yield reduced component levels for parallel sampling. This practice will help to identify problems arising from breakthrough of the component of interest during sampling.

14.4 GC/MS Analysis

14.4.1 Performance criteria for MS tuning and mass calibration have been discussed in Section 11.2 and Table 2. Additional criteria may be used by the laboratory if desired. The following sections provide performance guidance and suggested criteria for determining the acceptability of the GC/MS system.

14.4.2 Chromatographic efficiency should be evaluated using spiked Tenax cartridges since this practice tests the entire system. In general a reference compound such as perfluorotoluene should be spiked onto a cartridge at the 100 nanogram level as described in Section 13.2 or 13.3. The cartridge is then analyzed by GC/MS as described in Section 11.4. The perfluorotoluene (or other reference compound) peak is then plotted on an expanded time scale so that its width at 10% of the peak can be calculated, as shown in Figure 6. The width of the peak at 10% height should not exceed 10 seconds. More stringent criteria may be required for certain applications. The asymmetry factor (see Figure 6) should be between 0.8 and 2.0. The asymmetry factor for

any polar or reactive compounds should be determined using the process described above. If peaks are observed that exceed the peak width or asymmetry factor criteria above, one should inspect the entire system to determine if unswept zones or cold spots are present in any of the fittings and are necessary. Some laboratories may choose to evaluate column performance separately by direct injection of a test mixture onto the GC column. Suitable schemes for column evaluation have been reported in the literature (7). Such schemes cannot be conducted by placing the substances onto Tenax because many of the compounds (e.g., acids, bases, alcohols) contained in the test mix are not retained, or degrade, on Tenax.

14.4.3 The system detection limit for each component is calculated from the data obtained for calibration standards. The detection limit is defined as

$$DL = A + 3.3S$$

where

DL is the calculated detection limit in nanograms injected.
A is the intercept calculated in Section 12.1.1 or 12.1.3.
S is the standard deviation of replicate determinations of the lowest level standard (at least three such determinations are required).

In general the detection limit should be 20 nanograms or less and for many applications detection limits of 1-5 nanograms may be required. The lowest level standard should yield a signal to noise ratio, from the total ion current response, of approximately 5.

14.4.4 The relative standard deviation for replicate analyses of cartridges spiked at approximately 10 times the detection limit should be 20% or less. Day to day relative standard deviation should be 25% or less.

14.4.5 A useful performance evaluation step is the use of an internal standard to track system performance. This is accomplished by spiking each cartridge, including blank, sample, and calibration cartridges with approximately 100 nanograms of a compound not generally present in ambient air (e.g., perfluorotoluene). The integrated ion intensity for this compound helps to identify problems with a specific sample. In general the user should calculate the standard deviation of the internal standard response for a given set of samples analyzed under identical tuning and calibration conditions. Any sample giving a value greater than $\pm$ 2 standard deviations from the mean (calculated excluding that particular sample) should be identified as suspect. Any marked change in internal standard response may indicate a need for instrument recalibration.

REFERENCES

1. Krost, K. J., Pellizzari, E. D., Walburn, S. G., and Hubbard, S. A., "Collection and Analysis of Hazardous Organic Emissions", Analytical Chemistry, 54, 810-817, 1982.

2. Pellizzari, E. O. and Bunch, J. E., "Ambient Air Carcinogenic Vapors-Improved Sampling and Analytical Techniques and Field Studies", EPA-600/2-79-081, U.S. Environmental Protection Agency, Research Triangle Park, North Carolina, 1979.

3. Kebbekus, B. B. and Bozzelli, J. W., "Collection and Analysis of Selected Volatile Organic Compounds in Ambient Air", Proc. Air Pollution Control Assoc., Paper No. 82-65.2. Air Poll. Control Assoc., Pittsburgh, Pennsylvania, 1982.

4. Riggin, R. M., "Technical Assistance Document for Sampling and Analysis of Toxic Organic Compounds in Ambient Air", EPA-600/4-83-027, U.S. Environmental Protection Agency, Research Triangle Park, North Carolina, 1983.

5. Walling, J. F., Berkley, R. E., Swanson, D. H., and Toth, F. J. "Sampling Air for Gaseous Organic Chemical-Applications to Tenax", EPA-600/7-54-82-059, U.S. Environmental Protection Agency, Research Triangle Park, North Carolina, 1982.

6. Annual Book of ASTM Standards, Part 11.03, "Atmospheric Analysis", American Society for Testing and Materials, Philadelphia, Pennsylvania.

7. Grob, K., Jr., Grob, G., and Grob, K., "Comprehensive Standardized Quality Test for Glass Capillary Columns", J. Chromatog., 156, 1-20, 1978.

TABLE 1. RETENTION VOLUME ESTIMATES FOR COMPOUNDS ON TENAX

COMPOUND	ESTIMATED RETENTION VOLUME AT 100°F (38°C)-LITERS/GRAM
Benzene	19
Toluene	97
Ethyl Benzene	200
Xylene(s)	~200
Cumene	440
n-Heptane	20
l-Heptene	40
Chloroform	8
Carbon Tetrachloride	8
1,2-Dichloroethane	10
1,1,1-Trichloroethane	6
Tetrachloroethylene	80
Trichloroethylene	20
1,2-Dichloropropane	30
1,3-Dichloropropane	90
Chlorobenzene	150
Bromoform	100
Ethylene Dibromide	60
Bromobenzene	300

TABLE 2. SUGGESTED PERFORMANCE CRITERIA FOR RELATIVE ION ABUNDANCES FROM FC-43 MASS CALIBRATION

M/E	% RELATIVE ABUNDANCE
51	1.8 ± 0.5
69	100
100	12.0 ± 1.5
119	12.0 ± 1.5
131	35.0 ± 3.5
169	3.0 ± 0.4
219	24.0 ± 2.5
264	3.7 ± 0.4
314	0.25 ± 0.1

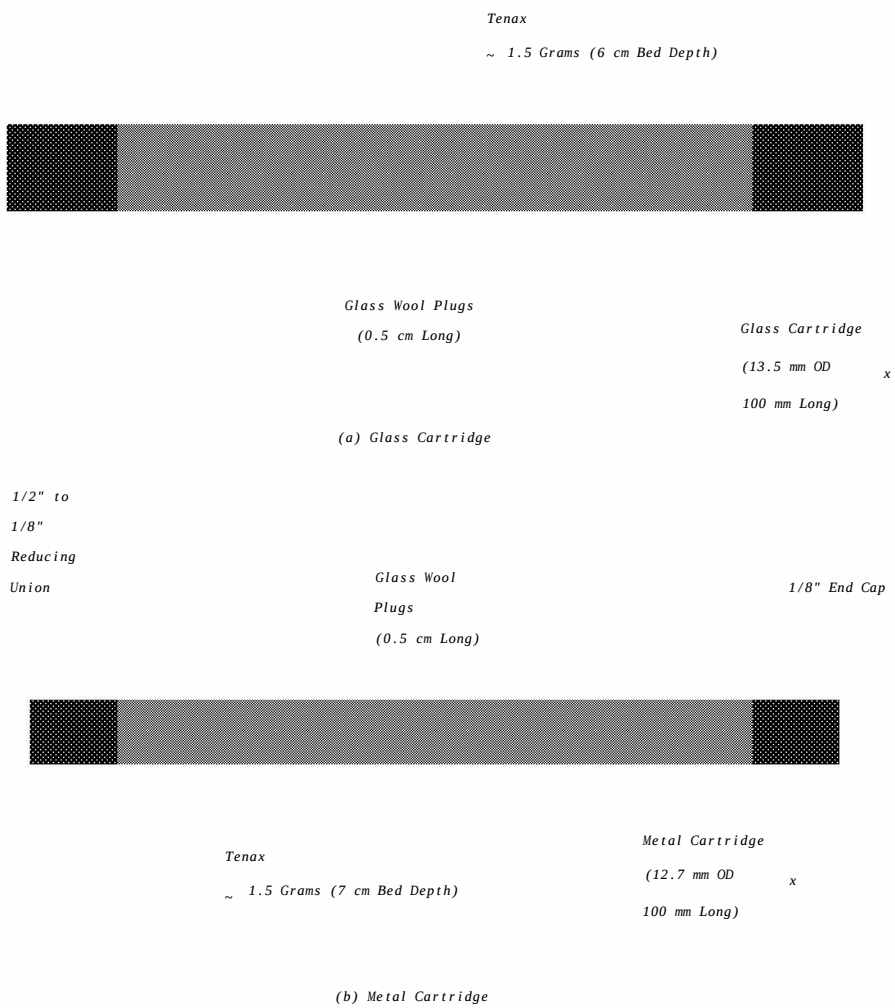

FIGURE 1. TENAX CARTRIDGE DESIGNS

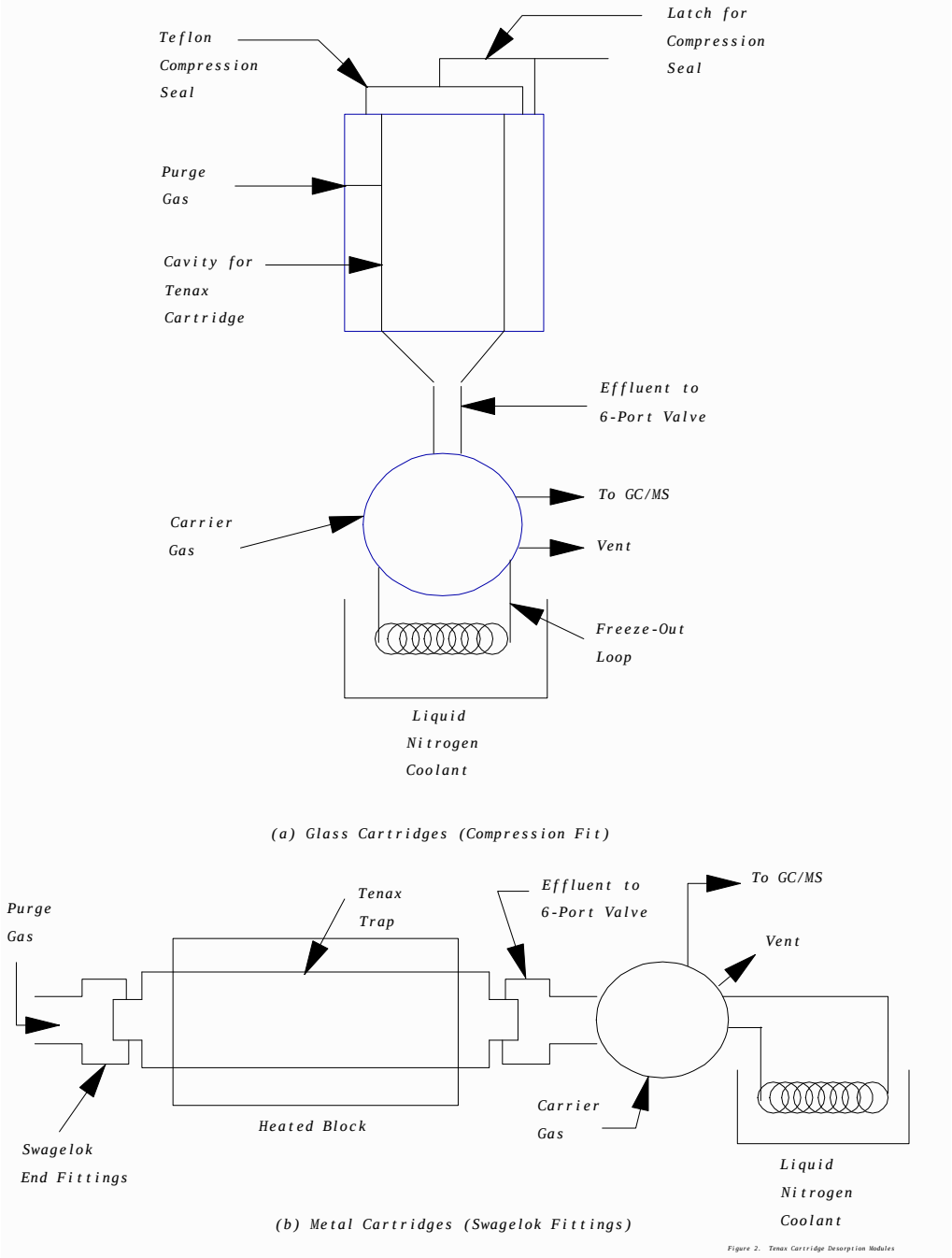

FIGURE 2. TENAX CARTRIDGE DESORPTION MODULES

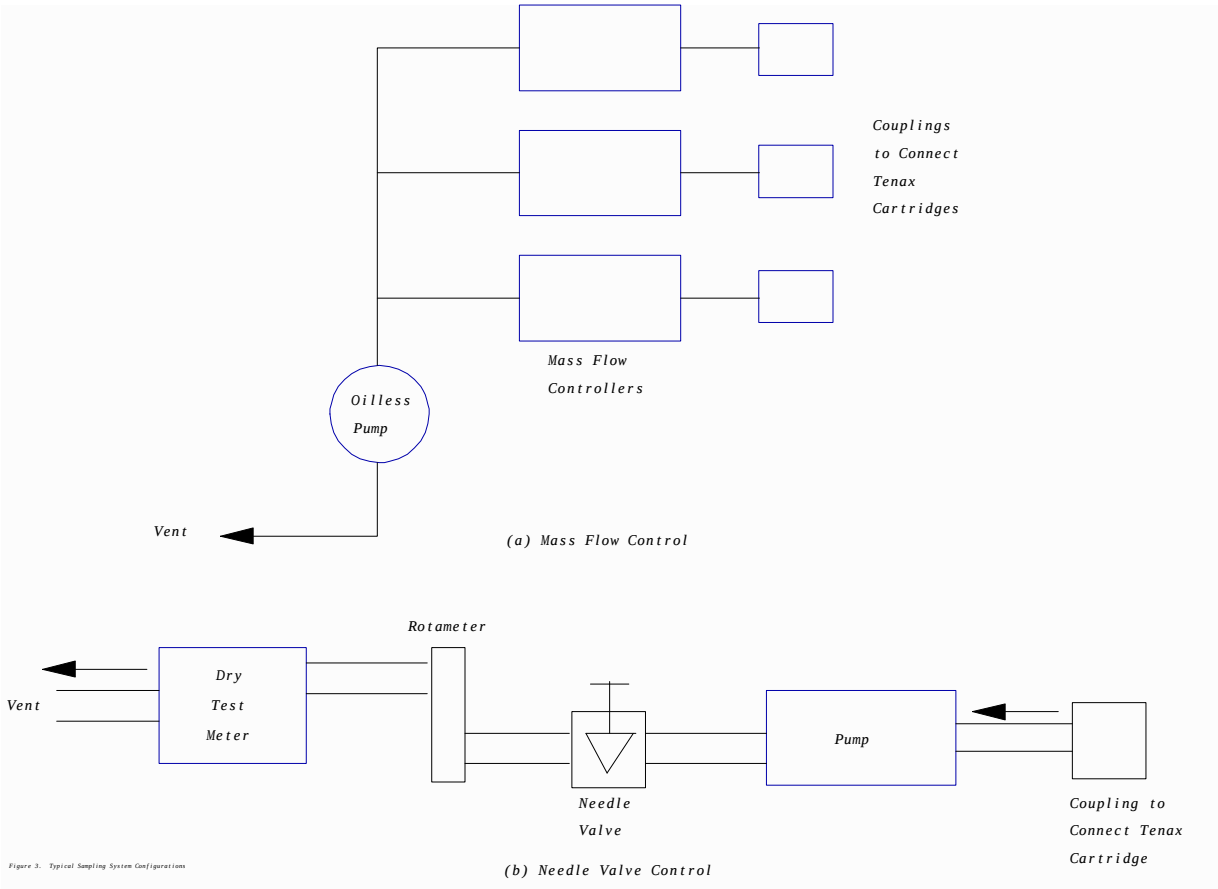

FIGURE 3. TYPICAL SAMPLING SYSTEM CONFIGURATIONS

SAMPLING DATA SHEET
(One Sample Per Data Sheet)

PROJECT: _____ DATE(S) SAMPLED: _____

SITE: _____ TIME PERIOD SAMPLED: _____

LOCATION: _____ OPERATOR: _____

INSTRUMENT MODEL NO: _____ CALIBRATED BY: _____

PUMP SERIAL NO: _____

SAMPLING DATA

Sample Number: _____
Start Time: _____ Stop Time: _____

Time	Dry Gas Meter Reading	Rotameter Reading	Flow Rate, Q ml/Min	Ambient Temp. °C	Barometric Pressure, mmHg	Relative Humidity,%	Comments
1.							
2.							
3.							
4.							
N.							

Total Volume Data**

V_m = (Final - Initial) Dry Gas Meter Reading, or = _____ Liters

$$= \frac{Q_1 + Q_2 + Q_3 \ldots Q_N}{N} \times \frac{1}{1000 \times (\text{Sampling Time in Minutes})} = _____ \text{ Liters}$$

* Flowrate from rotameter or soap bubble calibrator (specify which).
** Use data from dry gas meter if available.

FIGURE 4. EXAMPLE SAMPLING DATA SHEET

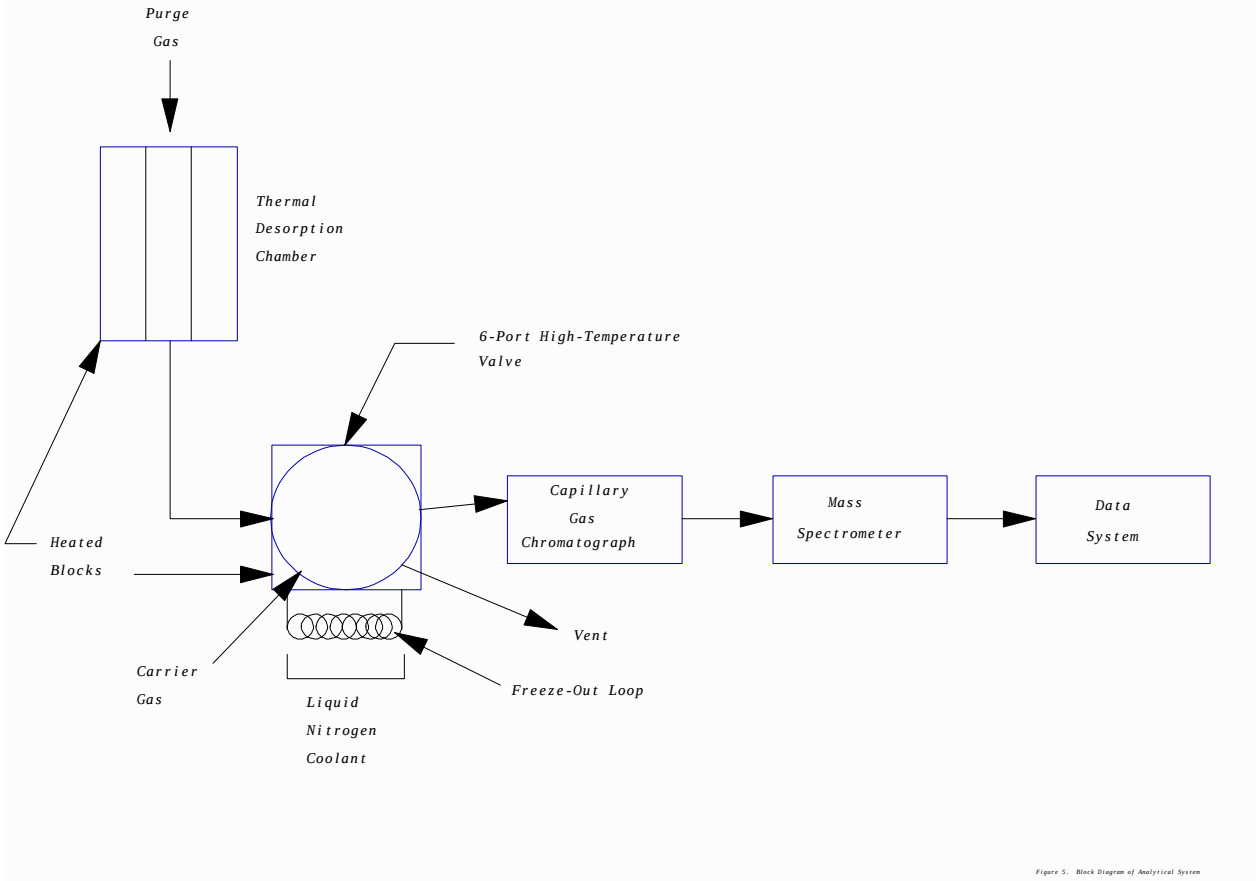

FIGURE 5. BLOCK DIAGRAM OF ANALYTICAL SYSTEM

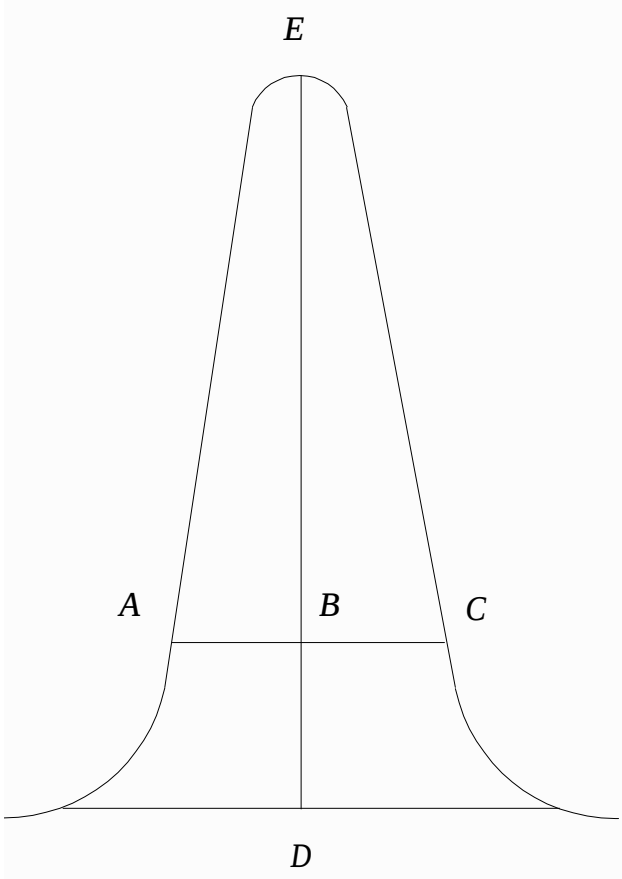

$$\text{Asymmetry Factor} = \frac{BC}{AB}$$

Example Calculation:

Peak Height = DE = 100 mm

10% Peak Height = BD = 10 mm

Peak Width at 10% Peak Height = AC = 23 mm

AB = 11 mm

BC = 12 mm

$$\text{Therefore: Asymmetry Factor} = \frac{12}{11} = 1.1$$

FIGURE 6. PEAK ASYMMETRY CALCULATION

METHOD TO-2

Revision 1.0
April, 1984

METHOD FOR THE DETERMINATION OF VOLATILE ORGANIC COMPOUNDS IN AMBIENT AIR BY CARBON MOLECULAR SIEVE ADSORPTION AND GAS CHROMATOGRAPHY/MASS SPECTROMETRY (GC/MS)

1. Scope

1.1 This document describes a procedure for collection and determination of selected volatile organic compounds which can be captured on carbon molecular sieve (CMS) adsorbents and determined by thermal desorption GC/MS techniques.

1.2 Compounds which can be determined by this method are nonpolar and nonreactive organics having boiling points in the range -15 to +120°C. However, not all compounds meeting these criteria can be determined. Compounds for which the performance of the method has been documented are listed in Table 1. The method may be extended to other compounds but additional validation by the user is required. This method has been extensively used in a <u>single</u> laboratory. Consequently, its general applicability has not been thoroughly documented.

2. Applicable Documents

2.1 ASTM Standards
D 1356 Definitions of Terms Related to Atmospheric Sampling and Analysis.
E 355 Recommended Practice for Gas Chromatography Terms and Relationships.

2.2 Other Documents
Ambient Air Studies (1,2).
U.S. EPA Technical Assistance Document (3).

3. Summary of Method

3.1 Ambient air is drawn through a cartridge containing ~0.4 of a carbon molecular sieve (CMS) adsorbent. Volatile organic compounds are captured on the adsorbent while major inorganic atmospheric constituents pass through (or are only partially retained). After sampling, the cartridge is returned to the laboratory for analysis.

3.2 Prior to analysis the cartridge is purged with 2-3 liters of pure, dry air (in the same direction as sample flow) to remove adsorbed moisture.

3.3 For analysis the cartridge is heated to 350°-400°C, under helium purge and the desorbed organic compounds are collected in a specially designed cryogenic trap. The collected organics are then flash evaporated onto a capillary column GC/MS system (held at -70°C). The individual components are identified and quantified during a temperature programmed chromatographic run.

3.4 Due to the complexity of ambient air samples, only high resolution (capillary column) GC techniques are acceptable for most applications of the method.

4. Significance

4.1 Volatile organic compounds are emitted into the atmosphere from a variety of sources including industrial and commercial facilities, hazardous waste storage and treatment facilities, etc. Many of these compounds are toxic; hence knowledge of the concentration of such materials in the ambient atmosphere is required in order to determine human health impacts.

4.2 Traditionally air monitoring methods for volatile organic compounds have relied on carbon adsorption followed by solvent desorption and GC analysis. Unfortunately, such methods are not sufficiently sensitive for ambient air monitoring, in most cases, because only a small portion of the sample is injected onto the GC system. Recently on-line thermal desorption methods, using organic polymeric adsorbents such as Tenax® GC, have been used for ambient air monitoring. The current method uses CMS adsorbents (e.g. Spherocarb®) to capture highly volatile organics (e.g., vinyl chloride) which are not collected on Tenax®. The use of on-line thermal desorption GS/MS yields a sensitive, specific analysis procedure.

5. Definitions

Definitions used in this document and any user prepared SOPs should be consistent with ASTM D1356 (4). All abbreviations and symbols are defined with this document at the point of use.

6. Interferences

6.1 Only compounds having a mass spectrum and GC retention time similar to the compound of interest will interfere in the method. The most commonly encountered interferences are structural isomers.

6.2 Contamination of the CMS cartridge with the compound(s) of interest can be a problem in the method. The user must be careful in the preparation, storage, and handling of the cartridges through the entire process to minimize contamination.

7. Apparatus

7.1 Gas Chromatograph/Mass Spectrometry system - must be capable of subambient temperature programming. Unit mass resolution to 800 amu. Capable of scanning 30-300 amu region every 0.5-0.8 seconds. Equipped with data system for instrument control as well as data acquisition, processing and storage.

7.2 Thermal Desorption Injection Unit - Designed to accommodate CMS cartridges in use (See Figure 3) and including cryogenic trap (Figure 5) and injection valve (Carle Model 5621 or equivalent).

7.3 Sampling System - Capable of accurately and precisely drawing an air flow of 10-500 ml/minute through the CMS cartridge. (See Figure 2a or b.)

7.4 Dewar flasks - 500 mL and 5 liter.

7.5 Stopwatches.

7.6 Various pressure regulators and valves - for connecting compressed gas cylinders to GC/MS system.

7.7 Calibration gas - In aluminum cylinder. Prepared by user or vendor. For GC/MS calibration.

7.8 High pressure apparatus for preparing calibration gas cylinders (if conducted by user). Alternatively, custom prepared gas mixtures can be purchased from gas supply vendors.

7.9 Friction top can (e.g. one-gallon paint-can) - With layer of activated charcoal to hold clean CMS cartridges.

7.10 Thermometer - to record ambient temperature.

7.11 Barometer (optional).

7.12 Dilution bottle - Two-liter with septum cap for standard preparation.

7.13 Teflon stirbar - 1 inch long.

7.14 Gas tight syringes - 10-500 μl for standard injection onto GC/MS system and CMS cartridges.

7.15 Liquid microliter syringes - 5-50 μL for injecting neat liquid standards into dilution bottle.

7.16 Oven - 60 $\pm$ 5°C for equilibrating dilution bottle.

7.17 Magnetic stirrer.

7.18 Variable voltage transformers - (120 V and 1000 VA) and electrical connectors (or temperature controllers) to heat cartridge and cryogenic loop.

7.19 Digital pyrometer - 30 to 500°C range.

7.20 Soap bubble flow meter - 1, 10 and 100 mL calibration points.

7.21 Copper tubing (1/8 inch) and fittings for gas inlet lines.

7.22 GC column - SE-30 or alternative coating, glass capillary or fused silica.

7.23 Psychrometer (optional).

7.24 Filter holder - stainless steel or aluminum (to accommodate 1 inch diameter filter). Other sizes may be used if desired. (optional)

8. Reagents and Materials

8.1 Empty CMS cartridges - Nickel or stainless steel (See Figure 1).

8.2 CMS Adsorbent, 60/80 mesh-Spherocarb® from Analabs Inc., or equivalent.

8.3 Glasswool - silanized.

8.4 Methylene chloride - pesticide quality, or equivalent.

8.5 Gas purifier cartridge for purge and GC carrier gas containing charcoal, molecular sieves, and a drying agent. Available from various chromatography supply houses.

8.6 Helium - Ultra pure, (99.9999%) compressed gas.

8.7 Nitrogen - Ultra pure, (99.9999%) compressed gas.

8.8 Liquid nitrogen or argon (50 liter dewar).

8.9 Compressed air, if required - for operation of GC oven door.

8.10 Perfluorotributylamine (FC-43) for GC/MS calibration.

8.11 Chemical Standards - Neat compounds of interest. Highest purity available.

9. Cartridge Construction and Preparation

9.1 A suitable cartridge design is shown in Figure 1. Alternate designs have been reported (1) and are acceptable, provided the user documents their performance. The design shown in Figure 1 has a built-in heater assembly. Many users may choose to replace this heater design with a suitable separate heating block or oven to simplify the cartridge design.

9.2 The cartridge is assembled as shown in Figure 1 using standard 0.25 inch O.D. tubing (stainless steel or nickel), 1/4 inch to 1/8 inch reducing unions, 1/8 inch nuts, ferrules, and endcaps. These parts are rinsed with methylene chloride and heated at 250°C for 1 hour prior to assembly.

9.3 The thermocouple bead is fixed to the cartridge body, and insulated with a layer of Teflon tape. The heater wire (constructed from a length of thermocouple wire) is wound around the length of the cartridge and wrapped with Teflon tape to secure the wire in place. The cartridge is then wrapped with woven silica fiber insulation (Zetex or equivalent). Finally the entire assembly is wrapped with fiber glass tape.

9.4 After assembly one end of the cartridge is marked with a serial number to designate the cartridge inlet during sample collection.

9.5 The cartridges are then packed with ~0.4 grams of CMS adsorbent. Glass wool plugs (~0.5 inches long) are placed at each end of the cartridge to hold the adsorbent firmly in place. Care must be taken to insure that no strands of glasswool extend outside the tubing, thus causing leakage in the compression endfittings. After loading the endfittings (reducing unions and end caps) are tightened onto the cartridge.

9.6 The cartridges are conditioned for initial use by heating at 400°C overnight (at least 16 hours) with a 100 mL/minute purge of pure nitrogen. Reused cartridges need only to be heated for 4 hours and should be reanalyzed before use to ensure complete desorption of impurities.

9.7 For cartridge conditioning ultra-pure nitrogen gas is passed through a gas purifier to remove oxygen, moisture and organic contaminants. The nitrogen supply is connected to the unmarked end of the cartridge and the flow adjusted to ~50 mL/minute using a needle valve. The gas flow from the inlet (marked) end of the cartridge is vented to the atmosphere.

9.8 The cartridge thermocouple lead is connected to a pyrometer and the heater lead is connected to a variable voltage transformer (Variac) set at 0 V. The voltage on the Variac is increased to ~15 V and adjusted over a 3-4 minute period to stabilize the cartridge temperature at 380-400°C.

9.9 After 10-16 hours of heating (for new cartridges) the Variac is turned off and the cartridge is allowed to cool to ~30°C, under continuing nitrogen flow.

9.10 The exit end of the cartridge is capped and then the entire cartridge is removed from the flow line and the other endcap immediately installed. The cartridges are then placed in a metal friction top (paint) can containing ~2 inches of granulated activated charcoal (to prevent contamination of the cartridges during storage) in the bottom, beneath a retaining screen. Clean paper tissues (e.g., Kimwipes) are placed in can to avoid damage to the cartridges during shipment.

9.11 Cartridges are stored in the metal can at all times except when in use. Adhesives initially present in the cartridge insulating materials are "burnt off" during initial conditioning. Therefore, unconditioned cartridges should not be placed in the metal can since they may contaminate the other cartridges.

9.12 Cartridges are conditioned within two weeks of use. A blank from each set of cartridges is analyzed prior to use in field sampling. If an acceptable blank level is achieved, that batch of cartridges (including the cartridge serving as the blank) can be used for field sampling.

10. Sampling

10.1 Flow Rate and Total Volume Selection

10.1.1 Each compound has a characteristic retention volume (liters of air per unit weight of adsorbent). However, all of the compounds listed in Table 1 have retention volumes (at 37°C) in excess of 100 liters/cartridge (0.4 gram CMS cartridge) except vinyl chloride for which the value is ~30 liters/cartridge. Consequently, if vinyl chloride or similarly volatile compounds are of concern the maximum allowable sampling volume is approximately 20 liters. If such highly volatile compounds are not of concern, samples as large as 100 liters can be collected.

10.1.2 To calculate the maximum allowable sampling flow rate the following equation can be used:

$$Q_{MAX} = \frac{V_{MAX}}{t} \times 1000$$

where

Q_{MAX} is the calculated maximum sampling rate in mL/minute.
t is the desired sampling time in minutes.
V_{MAX} is the maximum allowable total volume based on the discussion in 10.1.1.

10.1.3 For the cartridge design shown in Figure 1 Q_{MAX} should be between 20 and 500 mL/minute. If Q_{MAX} lies outside this range the sampling time or total sampling volume must be adjusted so that this criterion is achieved.

10.1.4 The flow rate calculated in 10.1.3 defines the <u>maximum</u> allowable flow rate. In general, the user should collect additional samples in parallel, at successive 2- to 4-fold lower flow rates. This practice serves as a quality

control procedure to check on component breakthrough and related sampling and adsorption problems, and is further discussed in the literature (5).

10.2 Sample Collection

10.2.1 Collection of an accurately known volume of air is critical to the accuracy of the results. For this reason the use of mass flow controllers, rather than conventional needle valves or orifices is highly recommended, especially at low flow rates (e.g., less than 100 milliliters/minute). Figure 2a illustrates a sampling system based on mass flow controllers which readily allows for collection of parallel samples. Figure 2b shows a commercially available sampling system based on needle valve flow controllers.

10.2.2 Prior to sample collection the sampling flow rate is calibrated near the value used for sampling, with a "dummy" CMS cartridge in place. Generally calibration is accomplished using a soap bubble flow meter or calibrated wet test meter connected to the flow exit, assuming the entire flow system is sealed. ASTM Method D 3686 (4) describes an appropriate calibration scheme, not requiring a sealed flow system downstream of the pump.

10.2.3 The flow rate should be checked before and after each sample collection. Ideally, a rotometer or mass flow meter should be included in the sampling system to allow periodic observation of the flow rate without disrupting the sampling process.

10.2.4 To collect an air sample the cartridges are removed from the sealed container just prior to initiation of the collection process.

10.2.5 The exit (unmarked) end of the cartridge is connected to the sampling apparatus. The endcap is left on the sample inlet and the entire system is leak checked by activating the sampling pump and observing that no flow is obtained over a 1 minute period. The sampling pump is then shut off.

10.2.6 The endcap is removed from the cartridge, a particulate filter and holder are placed on the inlet end of the cartridge, and the sampling pump is started. In many situations a particulate filter is not necessary since the compounds of interest are in the vapor state. However, if large amounts of particulate matter are encountered, the filter may be useful to prevent contamination of the cartridge. The following parameters are recorded on an appropriate data sheet (Figure 4): date, sampling location, time, ambient temperature, barometric pressure, relative humidity, dry gas meter reading (if applicable), flow rate, rotometer reading (if applicable), cartridge number, pump, and dry gas meter serial number.

10.2.7 The samples are collected for the desired time, periodically recording the variables listed above. At the end of the sampling period the parameters listed in 10.2.6 are recorded and the flow rate is checked. If the flows at the beginning and end of the sampling period differ by more than 10%, the cartridge should be marked as suspect.

10.2.8 The cartridges are removed (one at a time), the endcaps are replaced, and the cartridges are placed into the original container. The friction top can is sealed and packaged for immediate shipment to the analytical laboratory.

10.2.9 The average sample rate is calculated and recorded for each cartridge according to the following equation:

$$Q_A = \frac{Q_1 + Q_2 + \ldots Q_N}{N}$$

where

Q_A = Average flow rate is ml/minute

Q_1, Q_2 .... Q_N = Flow rates determined at beginning, end, and immediate points during sampling.

N = Number of points averaged.

10.2.10 The total volumetric flow is obtained directly from the dry gas meter or calculated and recorded for each cartridge using the following equation:

$$V_m = \frac{T \times Q_A}{1000}$$

where

V_m = Total volume sampled in liters at measured temperature and pressure.
T = Sampling time = T_2-T_1, minutes.

10.2.11 The total volume sampled (V_s) at standard conditions, 760 mm Hg and 25°C, is calculated from the following equation:

$$V_s = V_m \times \frac{Pa}{760} \times \frac{298}{273 + ta}$$

where

Pa = Average barometric pressure, mm Hg
ta = Average ambient temperature, °C.

11. Sample Analysis

11.1 Sample Purging

11.1.1 Prior to analysis all samples are purged at room temperature with pure, dry air or nitrogen to remove water vapor. Purging is accomplished as described in 9.7 except that the gas flow is in the same direction as sample flow (i.e. marked end of cartridge is connected to the flow system).

11.1.2 The sample is purged at 500 mL/minute for 5 minutes. After purging the endcaps are immediately replaced. The cartridges are returned to the metal can or analyzed immediately.

11.1.3 If very humid air is being sampled the purge time may be increased to more efficiently remove water vapor. However, the sum of sample volume and purge volume must be less than 75% of the retention volume for the most volatile component of interest.

11.2 GC/MS Setup

11.2.1 Considerable variation from one laboratory to another is expected in terms of instrument configuration. Therefore, each laboratory must be responsible for verifying that their particular system yields satisfactory results. Section 14 discusses specific performance criteria which should be met.

11.2.2 A block diagram of the analytical system required for analysis of CMS cartridges is depicted in Figure 3. The thermal desorption system must be designed to accommodate the particular cartridge configuration. For the CMS cartridge design shown in Figure 1, the cartridge heating is accomplished as described in 9.8. The use of a desorption oven, in conjunction with a simpler cartridge design is also acceptable. Exposure of the sample to metal surfaces should be minimized and only stainless steel or nickel should be employed. The volume of tubing leading from the cartridge to the GC column must be minimized and all areas must be well-swept by helium carrier gas.

11.2.3 The GC column oven must be capable of being cooled to -70°C and subsequently temperature programmed to 150°C.

11.2.4 The specific GC column and temperature program employed will be dependent on the compounds of interest. Appropriate conditions are described in the literature (2). In general, a nonpolar stationary phase (e.g., SE-30, OV-1) temperature programmed from -70 to 150°C at 8°/minute will be suitable. Fused silica, bonded-phase columns are preferable to glass columns since they are more rugged and can be inserted directly into the MS ion source, thereby eliminating the need for a GC/MS transfer line. Fused silica columns are also more readily connected to the GC injection valve (Figure 3). A drawback of fused silica, bonded-phase columns is the lower capacity compared to coated, glass capillary columns. In most cases the column capacity will be less than 1 microgram injected for fused silica columns.

11.2.5 Capillary column dimensions of 0.3mm ID and 50 meters long are generally appropriate although shorter lengths may be sufficient in many cases.

11.2.6 Prior to instrument calibration or sample analysis the GC/MS system is assembled as shown in Figure 3. Helium purge flow (through the cartridge) and carrier flow are set at approximately 50 mL/minute and 2-3 mL/minute respectively. When a cartridge is not in place a union is placed in the helium purge line to ensure a continuous inert gas flow through the injection loop.

11.2.7 Once the column and other system components are assembled and the various flows established the column temperature is increased to 250°C for approximately four hours (or overnight if desired) to condition the column.

11.2.8 The MS and data system are set up according to the manufacturer's instructions. Electron impact ionization (70eV) and an electron multiplier gain of approximately 5×10^4 should be employed. Once the entire GC/MS system has been setup the system is calibrated as described in Section 11.3. The user should prepare a detailed standard operating procedure (SOP) describing this process for the particular instrument being used.

11.3 GC/MS Calibration

11.3.1 Tuning and mass standardization of the MS system is performed according to manufacturer's instructions and relevant user prepared SOPs. Perfluorotributylamine (FC-43) should generally be employed as the reference compound. The material is introduced directly into the ion source through a molecular leak. The instrumental parameters (e.g., lens voltages, resolution, etc.) should be adjusted to give the relative ion abundances shown in Table 2, as well as acceptable resolution and peak shape. If these approximate relative abundances cannot be achieved, the ion source may require cleaning according to manufacturer's instructions. In the event

that the user's instrument cannot achieve these relative ion abundances, but is otherwise operating properly, the user may adopt another set of relative abundances as performance criteria. However, these alternate values must be repeatable on a day-to-day basis.

11.3.2 After the mass standardization and tuning process has been completed and the appropriate values entered into the data system, the user should then calibrate the entire GC/MS system by introducing known quantities of the components of interest into the system. Three alternate procedures may be employed for the calibration process including 1) direct injection of dilute vapor phase standards, prepared in a dilution bottle or compressed gas cylinder, onto the GC column, 2) injection or dilute vapor phase standards into a flowing inert gas stream directed onto a CMS cartridge, and 3) introduction of permeation or diffusion tube standards onto a CMS cartridge. Direct injection of a compressed gas cylinder (aluminum) standard containing trace levels of the compounds of interest has been found to be the most convenient practice since such standards are stable over a several month period. The standards preparation processes for the various approaches are described in Section 13. The following paragraphs describe the instrument calibration process for these approaches.

11.3.3 If the system is to be calibrated by direct injection of a vapor phase standard, the standard, in either a compressed gas cylinder or dilution flask, is obtained as described in Section 13. The MS and data system are setup for acquisition, but the ionizer filament is shut off. The GC column oven is cooled to -70°C, the injection valve is placed in the <u>load</u> mode, and the cryogenic loop is immersed in liquid nitrogen or liquid argon. Liquid argon is required for standards prepared in nitrogen or air, but not for standards prepared in helium. A known volume of the standard (10-1000 mL) is injected through the cryogenic loop at a rate of 10-100 mL/minute.

11.3.4 Immediately after loading the vapor phase standard, the injection valve is placed in the inject mode, the GC program and system clock are started, and the cryogenic loop is heated to 60°C by applying voltage (15-20 volts) to the thermocouple wire heater surrounding the loop. The voltage is adjusted to maintain a loop temperature of 60°C. An automatic temperature controller can be used in place of the manual control system. After elution of unretained components (~3 minutes after injection) the ionizer filament is turned on and data acquisition is initiated. The helium purge line (set at 50 mL/minute) is connected to the injection valve and the valve is returned to the load mode. The loop temperature is increased to 150°C, with helium purge, and held at this temperature until the next sample is to be loaded.

11.3.5 After the last component of interest has eluted, acquisition is terminated and the data is processed as described in Section 11.3.8. The standard injection process is repeated using different standard concentrations and/or volumes to cover the analytical range of interest.

11.3.6 If the system is to be calibrated by analysis of standard CMS cartridges, a series of cartridges is prepared as described in Sections 13.2 or 13.3. Prior to analysis the cartridges are stored (no longer than 48 hours) as described in Section 9.10. For analysis the injection valve is placed in the load mode and the cryogenic loop is immersed in liquid nitrogen (or liquid argon if desired). The CMS cartridge is installed in the helium purge line (set at 50 mL/minute) so that the helium flow through the cartridge is opposite to the direction of sample flow and the purge gas is directed through the cryogenic loop and vented to the atmosphere. The CMS cartridge is heated to 370-400°C and maintained at this temperature for 10 minutes (using the temperature control process described in Section 9.8). During the desorption period, the GC column oven is cooled to -70°C and the MS and data system are setup for acquisition, but the ionizer filament is turned off.

11.3.7 At the end of the 10 minute desorption period, the analytical process described in Sections 11.3.4 and 11.3.5 is conducted. During the GC/MS analysis heating of the CMS cartridge is discontinued. Helium flow is maintained through the CMS cartridge and cryogenic loop until the cartridge has cooled to room temperature. At that time, the cryogenic loop is allowed to cool to room temperature and the system is ready for further cartridge analysis. Helium flow is maintained through the cryogenic loop at all times, except during the installation or removal of a CMS cartridge, to minimize contamination of the loop.

11.3.8 Data processing for instrument calibration involves determining retention times, and integrated characteristic ion intensities for each of the compounds of interest. In addition, for at least one chromatographic run, the individual mass spectra should be inspected and compared to reference spectra to ensure proper instrumental performance. Since the steps involved in data processing are highly instrument specific, the user should prepare a SOP describing the process for individual use. Overall performance criteria for instrument calibration are provided in Section 14. If these criteria are not achieved, the user should refine the instrumental parameters and/or operating procedures to meet these criteria.

11.4 Sample Analysis

11.4.1 The sample analysis is identical to that described in Sections 11.3.6 and 11.3.7 for the analysis of standard CMS cartridges.

11.4.2 Data processing for sample data generally involves 1) qualitatively determining the presence or absence of each component of interest on the basis of a set of characteristic ions and the retention time using a reversed-search software routine, 2) quantification of each identified component by integrating the intensity of a characteristic ion and comparing the value to that of the calibration standard, and 3) tentative

identification of other components observed using a forward (library) search software routine. As for other user specific processes, a SOP should be prepared describing the specific operations for each individual laboratory.

12. Calculations

12.1 Calibration Response Factors

12.1.1 Data from calibration standards is used to calculate a response factor for each component of interest. Ideally the process involves analysis of at least three calibration levels of each component during a given day and determination of the response factor (area/nanogram injected) from the linear least squares fit of a plot of nanograms injected versus area (for the characteristic ion). In general, quantities of components greater than 1,000 nanograms should not be injected because of column overloading and/or MS response nonlinearity.

12.1.2 In practice the daily routine may not always allow analysis of three such calibration standards. In this situation calibration data from consecutive days may be pooled to yield a response factor, provided that analysis of replicate standards of the same concentration are shown to agree within 20% on the consecutive days. In all cases one given standard concentration, near the midpoint of the analytical range of interest, should be injected at least once each day to determine day-to-day precision of response factors.

12.1.3 Since substantial nonlinearity may be present in the calibration curve, a nonlinear least squares fit (e.g. quadratic) should be employed. This process involves fitting the data to the following equation:

$$Y = A + BX + CX^2$$

where

Y = peak area
X = quantity of component injected nanograms
A, B, and C are coefficients in the equation.

12.2 Analyte Concentrations

12.2.1 Analyte quantities on a sample cartridge are calculated from the following equation:

$$Y_A = A + BX_A + CX^2$$

where

Y_A is the area of the analyte characteristics ion for the sample cartridge.

X_A is the calculated quantity of analyte on the sample cartridge, in nanograms.

A, B, and C are the coefficients calculated from the calibration curve described in Section 12.1.3.

12.2.2 If instrumental response is essentially linear over the concentration range of interest, a linear equation (C=O in the equation above) can be employed.

12.2.3 Concentration of analyte in the original air sample is calculated from the following equation:

$$C_A = \frac{X_A}{V_s}$$

where

C_A is the calculated concentration of analyte in ng/L.

V_s and X_A are as previously defined in Section 10.2.11 and 12.2.1, respectively.

13. Standard Preparation

13.1 Standards for Direct Injection

13.1.1 Standards for direct injection can be prepared in compressed gas cylinders or in dilution vessels. The dilution flask protocol has been described in detail in another method and is not repeated here (6). For the CMS method where only volatile compounds (boiling point <120°C) are of concern, the preparation of dilute standards in 15 liter aluminum

compressed gas cylinders has been found to be most convenient. These standards are generally stable over at least a 3-4 month period and in some cases can be purchased from commercial suppliers on a custom prepared basis.

13.1.2 Preparation of compressed gas cylinders requires working with high pressure tubing and fittings, thus requiring a user prepared SOP which ensures that adequate safety precautions are taken. Basically, the preparation process involves injecting a predetermined amount of neat liquid or gas into an empty high pressure cylinder of known volume, using gas flow into the cylinder to complete the transfer. The cylinder is then pressurized to a given value (500-1000 psi). The final cylinder pressure must be determined using a high precision gauge after the cylinder has thermally equilibrated for a 1-2 hour period after filling.

13.1.3 The concentration of components in the cylinger standard should be determined by comparison with National Bureau of Standards reference standards (e.g., SRM 1805-benzene in nitrogen) when available.

13.1.4 The theoretical concentration (at 25°C and 760 mm pressure) for preparation of cylinder standards can be calculated using the following equation:

$$C_T = \frac{V_I \times d}{V_c} \times \frac{14.7}{P_c + 14.7} \times 24.4 \times 1000$$

where

C_T is the component concentration, in ng/mL at 25°C and 760 mm Hg pressure.

V_I is the volume of neat liquid component injected in μL.

V_c is the internal volume of the cylinder, in L.

d is the density of the neat liquid component, in g/mL.

P_c is the final pressure of the cylinder standards, in pounds per square inch gauge (psig).

13.2 Preparation of Spiked Traps by Vapor Phase Injection

This process involves preparation of dilution flask or compressed gas cylinder containing the desired concentrations of the compound(s) of interest and injecting the desired volume of vapor into a flowing gas stream which is directed onto a clean CMS cartridge. The procedure is described in detail in another method within the Compendium (6) and will not be repeated here.

13.3 Preparation of Spiked Traps Using Permeation or Diffusion Tubes

13.3.1 A flowing stream of inert gas containing known amounts of each compound of interest is generated according to ASTM Method D3609 (4). Note that a method of accurately maintaining temperature within ± 0.1°C is required and the system generally must be equilibrated for at least 48 hours before use.

13.3.2 An accurately known volume of the standard gas stream (usually 0.1-1 liters) is drawn through a clean CMS cartridge using the sampling system described in Section 10.2.1, or a similar system. However, if mass flow controllers are employed, they must be calibrated for the carrier gas used in Section 13.3.1 (usually nitrogen). Use of air as the carrier gas for permeation systems is not recommended, unless the compounds of interest are known to be highly stable in air.

13.3.3 The spiked traps are then stored or immediately analyzed as in Sections 11.3.6 and 11.3.7.

14. Performance Criteria and Quality Assurance

This section summarizes the quality assurance (QA) measures and provides guidance concerning performance criteria which should be achieved within each laboratory. In many cases the specific QA procedures have been described within the appropriate section describing the particular activity (e.g. parallel sampling).

14.1 Standard Operating Procedures (SOPs)

14.1.1 Each user should generate SOPs describing the following activities as accomplished in their laboratory: 1) assembly, calibration and operation of the sampling system, (2) preparation, handling and storage of CMS cartridges, 3) assembly and operation of GC/MS system including the thermal desorption apparatus and data system, and 4) all aspects of data recording and processing.

14.1.2 SOPs should provide specific stepwise instructions and should be readily available to, and understood by the laboratory personnel conducting the work.

14.2 CMS Cartridge Preparation

14.2.1 Each batch of CMS cartridges, prepared as described in Section 9, should be checked for contamination by analyzing one cartridge, immediately after preparation. While analysis can be accomplished by GC/MS, many laboratories may choose to use GC/FID due to logistical and cost considerations.

14.2.2 Analysis by GC/FID is accomplished as described for GC/MS (Section 11) except for use of FID detection.

14.2.3 While acceptance criteria can vary depending on the components of interest, at a minimum the clean cartridge should be demonstrated to contain less than one-fourth of the minimum level of interest for each component. For most compounds the blank level should be less then 10 nanograms per cartridge in order to be acceptable. More rigid criteria may be adopted, if necessary, within a specific laboratory. If a cartridge does not meet these acceptance criteria, the entire lot should be rejected.

14.3 Sample Collection

14.3.1 During each sampling event at least one clean cartridge will accompany the samples to the field and back to the laboratory, having been placed in the sampler but without sampling

air, to serve as field blank. The average amount of material found on the field blank cartridges may be subtracted from the amount found on the actual samples. However, if the blank level is greater than 25% of the sample amount, data for that component must be identified as suspect.

14.3.2 During each sampling event at least one set of parallel samples (two or more samples collected simultaneously) should be collected, preferably at different flow rates as described in Section 10.1.4. If agreement between parallel samples is not generally within ±25% the user should collect parallel samples on a much more frequent basis (perhaps for all sampling points). If a trend of lower apparent concentrations with increasing flow rate is observed for a set of parallel samples one should consider using a reduced sampling rate and longer sampling interval, if possible. If this practice does not improve the reproducibility further evaluation of the method performance for the compound of interest might be required.

14.3.3 Backup cartridges (two cartridges in series) should be collected with each sampling event. Backup cartridges should contain less than 10% of the amount of components of interest found in the front cartridges, or be equivalent to the blank cartridge level, whichever is greater.

14.4 GC/MS Analysis

14.4.1 Performance criteria for MS tuning and mass standardization have been discussed in Section 11.2 and Table 2. Additional criteria can be used by the laboratory, if desired. The following sections provide performance guidance and suggested criteria for determining the acceptability of the GC/MS system.

14.4.2 Chromatographic efficiency should be evaluated daily by the injection of calibration standards. A reference compound(s) should be chosen from the calibration standard and plotted on an expanded time scale so that its

width at 10% of the peak height can be calculated, as shown in Figure 6. The width of the peak at 10% height should not exceed 10 seconds. More stringent criteria may be required for certain applications. The asymmetry factor (see Figure 6) should be between 0.8 and 2.0. The user should also evaluate chromatographic performance for any polar or reactive compounds of interest, using the process described above. If peaks are observed that exceed the peak width or asymmetry factor criteria above, one should inspect the entire system to determine if unswept zones or cold spots are present in any of the fittings or tubing and/or if replacement of the GC column is required. Some laboratories may choose to evaluate column performance separate by direct injection of a test mixture onto the GC column. Suitable schemes for column evaluation have been reported in the literature (7).

14.4.3 The detection limit for each component is calculated from the data obtained for calibration standards. The detection limit is defined as

$$DL = A + 3.3S$$

where

DL is the calculated detection limit in nanograms injected.

A is the intercept calculated in Section 12.1.3.

S is the standard deviation of replicate determinations of the lowest level standard (at least three such determinations are required). The lowest level standard should yield a signal to noise ratio (from the total ion current response) of approximately 5.

14.4.4 The relative standard deviation for replicate analyses of cartridges spiked at approximately 10 times the detection limit should be 20% or less. Day to day relative standard deviation for replicate cartridges should be 25% or less.

14.4.5 A useful performance evaluation step is the use of an internal standard to track system performance. This is accomplished by spiking each cartridge, including blank, sample, and calibration cartridges with approximately 100 nanograms of a compound not generally present in ambient air (e.g., perfluorotoluene). Spiking is readily accomplished using the procedure outlined in Section 13.2, using a compressed gas standard. The integrated ion intensity for this compound helps to identify problems with a specific sample. In general the user should calculate the standard deviation of the internal standard response for a given set of samples analyzed under identical tuning and calibration conditions. Any sample giving a value greater than ± 2 standard deviations from the mean (calculated excluding that particular sample) should be identified as suspect. Any marked change in internal standard response may indicate a need for instrument recalibration.

14.5 Method Precision and Recovery

14.5.1 Recovery and precision data for selected volatile organic compounds are presented in Table 1. These data were obtained using ambient air, spiked with known amounts of the compounds in a dynamic mixing system(2).

14.5.2 The data in Table 1 indicate that in general recoveries better than 75% and precision (relative standard deviations) of 15-20% can be obtained. However, selected compounds (e.g. carbon tetrachloride and benzene) will have poorer precision and/or recovery. The user must check recovery and precision for any compounds for which quantitative data are needed.

References

1. Kebbekus, B. B. and J. W. Bozzelli. Collection and Analysis of Selected Volatile Organic Compounds in Ambient Air. Proceedings of Air Pollution Control Association, Paper No. 82-65.2, Air Pollution Control Association, Pittsburgh, Pennsylvania, 1982.

2. Riggin, R. M. and L. E. Slivon. Determination of Volatile Organic Compounds in Ambient Air Using Carbon Molecular Sieve Adsorbents, Special Report on Contract 68-02-3745 (WA-7), U.S. Environmental Protection Agency, Research Triangle Park, North Carolina, September, 1983.

3. Riggin, R. M., "Technical Assistance Document for Sampling and Analysis of Toxic Organic Compounds in Ambient Air", EPA-600/4-83-027, U.S. Environmental Protection Agency, Research Triangle Park, North Carolina, 1983.

4. Annual Book of ASTM Standards, Part 11.03, "Atmospheric Analysis: Occupational Health and Safety", American Society for Testing and Materials, 1983.

5. Walling, J. F., Berkley, R. E., Swanson, D. H., and Toth, F. J. "Sampling Air for Gaseous Organic Chemical-Applications to Tenax", EPA-600/7-54-82-059, U.S. Environmental Protection Agency, Research Triangle Park, North Carolina, 1982.

6. This Methods Compendium - Tenax Method (T0 1).

7. Grob, K., Jr., Grob, G., and Grob, K., "Comprehensive Standardized Quality Test for Glass Capillary Columns", J. Chromatog., 156 1-20, 1978.

TABLE 1. VOLATILE ORGANIC COMPOUNDS FOR WHICH THE CMS ADSORPTION METHOD HAS BEEN EVALUATED

Compound	Retention Time, Minutes[a]	Characteristic Mass Fragment Used for Quantification	Method Performance Data[b]		
			Concentration, ng/L	Percent Recovery	Standard Deviation
Vinyl Chloride	6.3	62	17	74	19
Acrylonitrile	10.8	53	20	85	18
Vinylidene Chloride	10.9	96	36	94	19
Methylene Chloride	11.3	84	28	93	16
Allyl Chloride	11.4	76	32	72	19
Chloroform	13.8	83	89	91	12
1,2-Dichloroethane	14.5	62	37	85	11
1,1,1-Trichloroethane	14.7	97	100	75	9.1
Benzene	15.4	78	15	140	37
Carbon Tetrachloride	15.5	117	86	55	2.9
Toluene	18.0	91	4.1	98	5.4

[a] GC conditions as follows:

Column - Hewlett Packard, crosslinked methyl silicone, 0.32 mm ID x 50 m long, thick film, fused silica.

Temperature Program - 70°C for 2 minutes then increased at 8°C/minute to 120°C.

[b] From Reference 2. For spiked ambient air.

TABLE 2. SUGGESTED PERFORMANCE CRITERIA FOR RELATIVE ION ABUNDANCES FROM FC-43 MASS CALIBRATION

M/E	% Relative Abundance
51	1.8 ± 0.5
69	100
100	12.0 ± 1.5
119	12.0 ± 1.5
131	35.0 ± 3.5
169	3.0 ± 0.4
219	24.0 ± 2.5
264	3.7 ± 0.4
314	0.25 ± 0.1

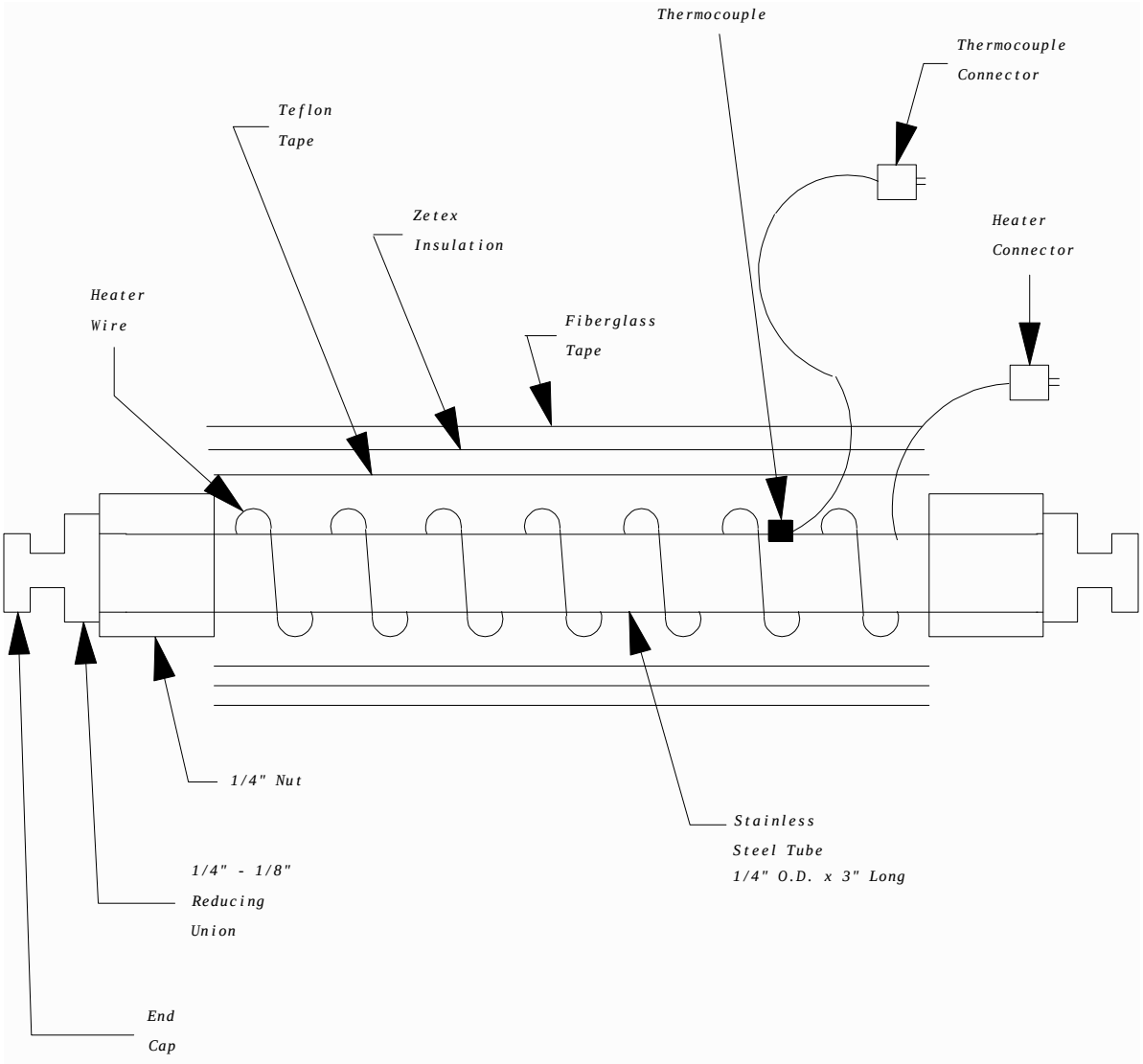

FIGURE 1. DIAGRAM SHOWING CARBON MOLECULAR SIEVE TRAP (CMS) CONSTRUCTION

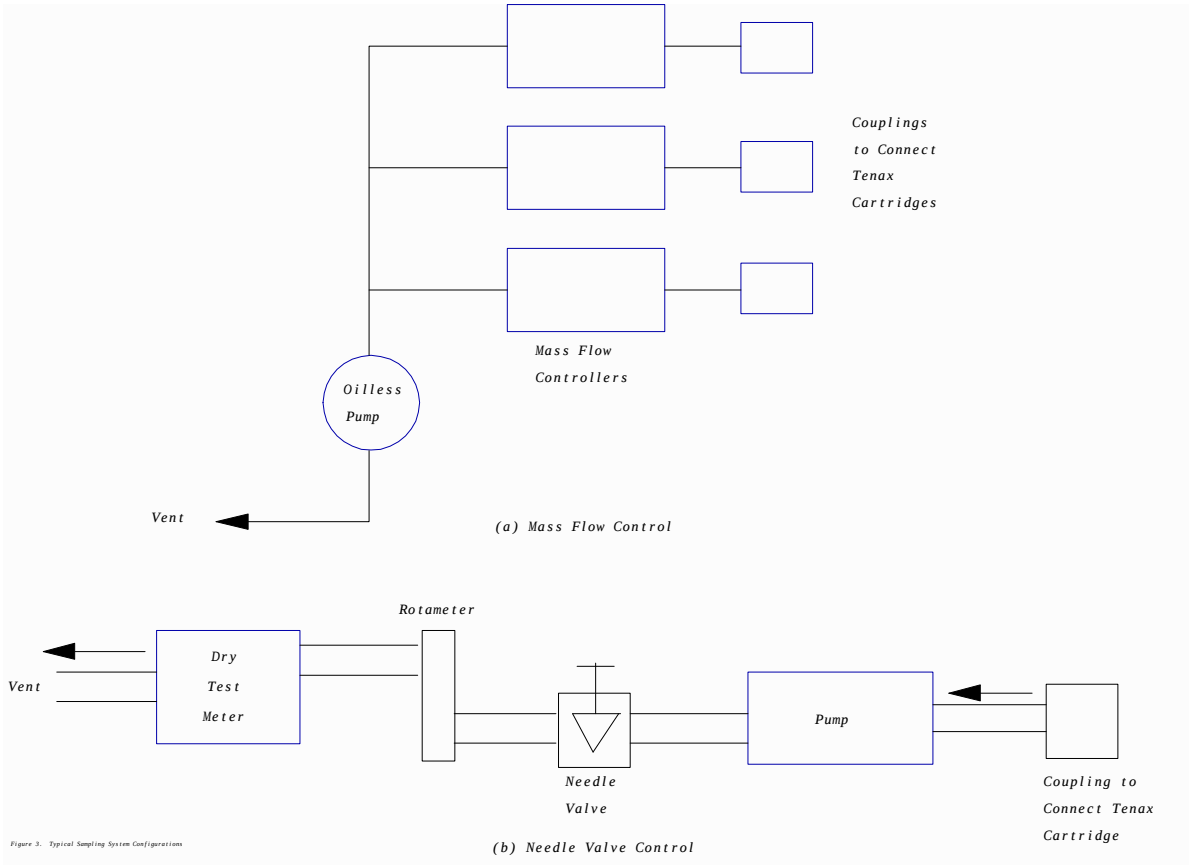

FIGURE 2. TYPICAL SAMPLING SYSTEM CONFIGURATIONS

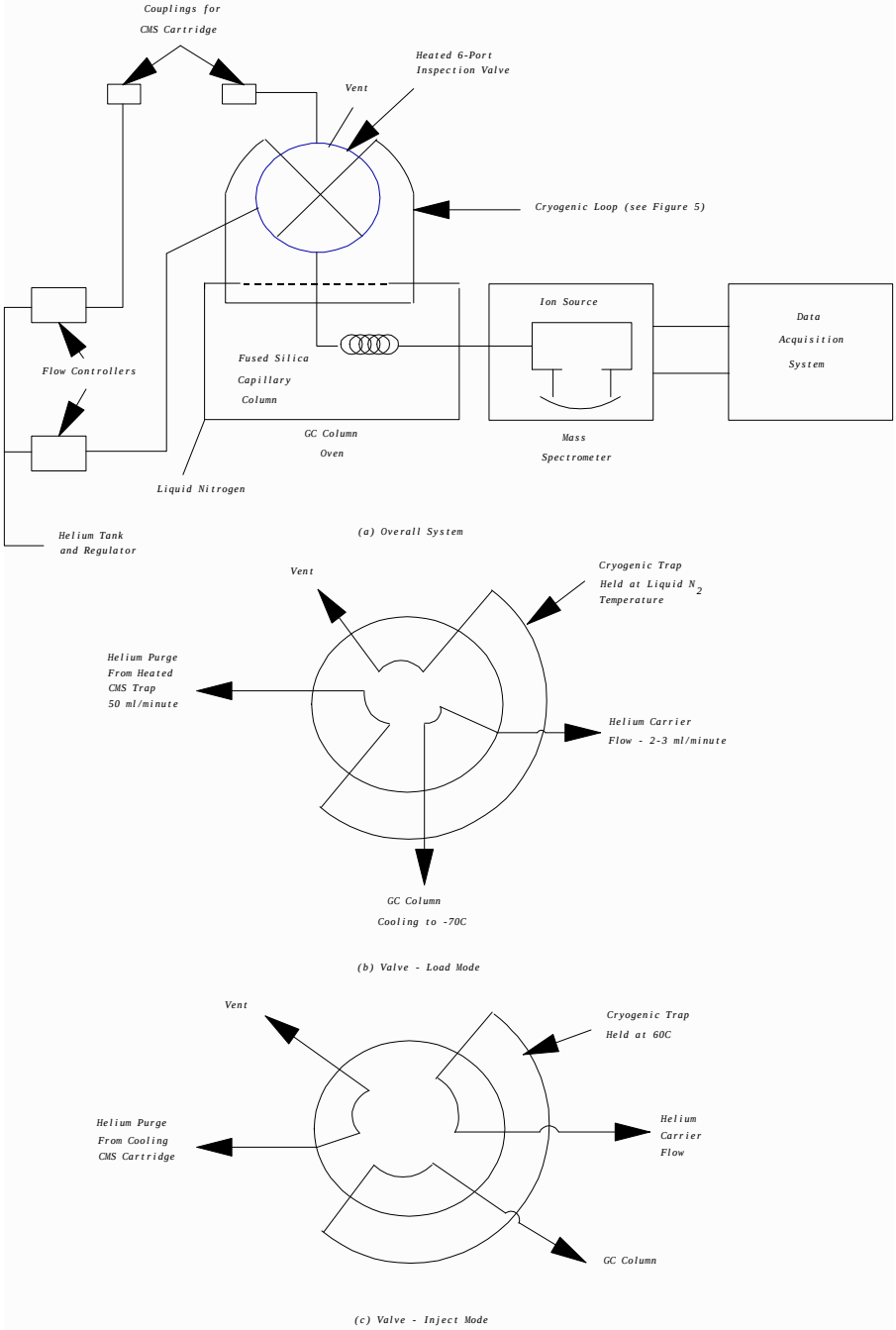

FIGURE 3. GC/MS ANALYSIS SYSTEM FOR CMS CARTRIDGES

SAMPLING DATA SHEET
(One Sample Per Data Sheet)

PROJECT: _____ DATE(S) SAMPLED: _____

SITE: _____ TIME PERIOD SAMPLED: _____

LOCATION: _____ OPERATOR: _____

INSTRUMENT MODEL NO: _____ CALIBRATED BY: _____

PUMP SERIAL NO: _____

SAMPLING DATA

Sample Number: _____
Start Time: _____ Stop Time: _____

Time	Dry Gas Meter Reading	Rotameter Reading	Flow Rate, Q ml/min *	Ambient Temp. °C	Barometric Pressure, mmHg	Relative Humidity,%	Comments
1.							
2.							
3.							
4.							
N.							

Total Volume Data**

V_m = (Final - Initial) Dry Gas Meter Reading, or = _____ Liters

$$= \frac{Q_1 + Q_2 + Q_3 \ldots Q_N}{N} \times \frac{1}{1000 \times (\text{Sampling Time in Minutes})} = _____ \text{ Liters}$$

* Flowrate from rotameter or soap bubble calibrator (specify which).
** Use data from dry gas meter if available.

FIGURE 4. EXAMPLE SAMPLING DATA SHEET

1/8" to 1/16" Reducing Union

1/8" Swagelok Nut and Ferrule

Silanized
Glass
Wool
1/2" Long

60/80 Mesh Silanized Glass Beads

Stainless Steel
Tubing
1/8" O.D. x 0.08" I.D. x 8" Long

FIGURE 5. CRYOGENIC TRAP DESIGN

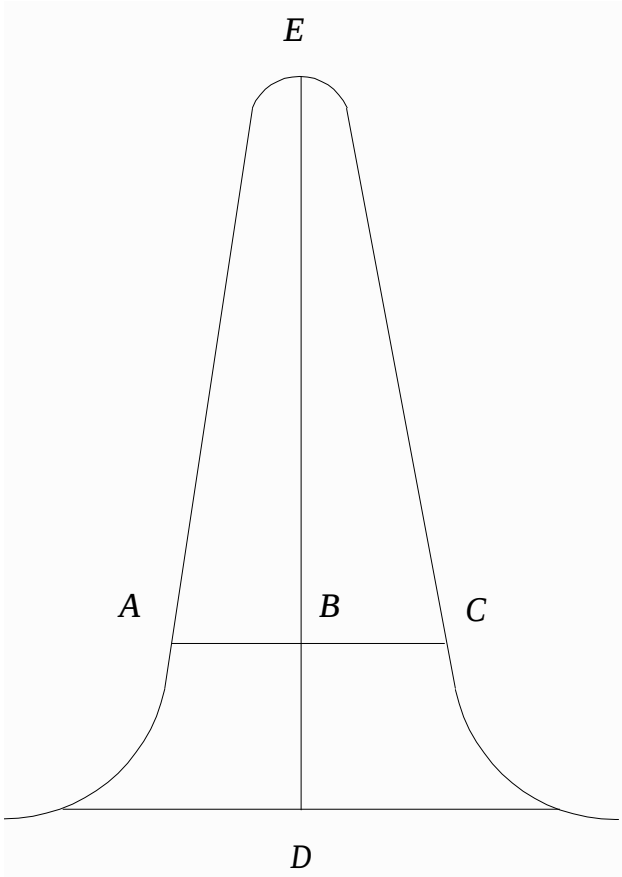

$$\text{Asymmetry Factor} = \frac{BC}{AB}$$

Example Calculation:

Peak Height = DE = 100 mm

10% Peak Height = BD = 10 mm

Peak Width at 10% Peak Height = AC = 23 mm

AB = 11 mm

BC = 12 mm

$$\text{Therefore: Asymmetry Factor} = \frac{12}{11} = 1.1$$

FIGURE 6. PEAK ASYMMETRY CALCULATION

METHOD FOR THE DETERMINATION OF VOLATILE ORGANIC COMPOUNDS IN AMBIENT AIR USING CRYOGENIC PRECONCENTRATION TECHNIQUES AND GAS CHROMATOGRAPHY WITH FLAME IONIZATION AND ELECTRON CAPTURE DETECTION

1. Scope

1.1 This document describes a method for the determination of highly volatile compounds having boiling points in the range of -10 to 200°C.

1.2 The methodology detailed in this document is currently employed by numerous laboratories (1-4;8-11). Modifications to this methodology should be accompanied by appropriate documentation of the validity and reliability of these changes.

2. Applicable Documents

2.1 ASTM Standards

D1356 Definition of Terms Related to Atmospheric Sampling and Analysis
E 355 Recommended Practice for Gas Chromatography Terms and Relationships

2.2 Other Documents

Ambient Air Studies (1-4).
U. S. EPA Technical Assistance Document (5).

3. Summary of Method

3.1 Ambient air analyses are performed as follows. A collection trap, as illustrated in Figure 1, is submerged in either liquid oxygen or argon. Liquid argon is highly recommended for use because of the safety hazard associated with liquid oxygen. With the sampling valve in the fill position an air sample is then admitted into the trap by a volume measuring apparatus. In the meantime, the column oven is cooled to a sub-ambient temperature (-50°C). Once sample collection is completed, the valve is switched so that the carrier gas sweeps the contents of the trap onto the head of the cooled GC column. Simultaneously, the liquid cryogen is

removed and the trap is heated to assist the sample transfer process. The GC column is temperature programmed and the component peaks eluting from the columns are identified and quantified using flame ionization and/or electron capture detection. Alternate detectors (e.g., photoionization) can be used as appropriate. An automated system incorporating these various operations as well as the data processing function has been described in the literature (8,9).

3.2 Due to the complexity of ambient air samples, high resolution (capillary column) GC techniques are recommended. However, when highly selective detectors (such as the electron capture detector) are employed, packed column technology without cryogenic temperature programming can be effectively utilized in some cases.

4. Significance

4.1 Volatile organic compounds are emitted into the atmosphere from a variety of sources including industrial and commercial facilities, hazardous waste storage facilities, etc. Many of these compounds are toxic, hence knowledge of the levels of such materials in the ambient atmosphere is required in order to determine human health impacts.

4.2 Because these organic species are present at ppb levels or below, some means of sample preconcentration is necessary in order to acquire sufficient material for identification and quantification. The two primary preconcentration techniques are cryogenic collection and the use of solid adsorbents. The method described herein involves the former technique.

5. Definitions

Definitions used in this document and any user prepared SOPs should be consistent with ASTM D1356(6). All abbreviations and symbols are defined within this document at the point of use.

6. Interferences/Limitations

6.1 Compounds having similar GC retention times will interfere in the method. Replacing the flame ionization detector with more selective detection systems will help to minimize these interferences. Chlorinated species, in particular, should be determined using the electron capture detector to avoid interference from volatile hydrocarbons.

6.2 An important limitation of the technique is the condensation of moisture in the collection trap. The possibility of ice plugging the trap and stopping the flow is of concern, and water subsequently transferred to the capillary column may also result in flow stoppage and cause deleterious effects to certain column materials. Use of permaselective Nafion® tubing in-line before the cryogenic trap avoids this problem; however, the material must be used with caution because of possible losses of certain compounds. Another potential problem is contamination from the Nafion® tubing. The user should consult the literature (7-12) for details on the use of permeation-type driers.

7. Apparatus

7.1 Gas chromatograph/Flame Ionization/Electron Capture Detection System - must be capable of subambient temperature programming. A recent publication (8) describes an automated GC system in which the cryogenic sampling and analysis features are combined. This system allows simultaneous flame ionization and electron capture detection.

7.2 Six-port sampling valve - modified to accept a sample collection trap (Figure 1).

7.3 Collection trap - 20 cm x 0.2 cm I.D. stainless steel tubing packed with 60/80 mesh silanized glass beads and sealed with glass wool. For the manual system (Section 9.2) the trap is externally wrapped with 28 gauge (duplex and fiberglass insulated) type "K" thermocouple wire. This wire, beaded at one end, is connected to a powerstat during the heating cycle. A thermocouple is also attached to the trap as shown in Figure 1.

7.4 Powerstat - for heating trap.

7.5 Temperature readout device - for measuring trap temperature during heating cycle.

7.6 Glass dewar flask - for holding cryogen.

7.7 Sample volume measuring apparatus - capable of accurately and precisely measuring a total sample volume up to 500 cc at sampling rates between 10 and 200 cc/minute. See Section 9.

7.8 Stopwatch.

7.9 Dilution container for standards preparation - glass flasks or Teflon (Tedlar) bags, .002 inch film thickness (see Figure 2).

7.10 Liquid microliter syringes - 5-50 μl for injecting liquid standards into dilution container.

7.11 Volumetric flasks - various sizes, 1-10 mL.

7.12 GC column - Hewlett Packard 50 meter methyl silicone cross-linked fused silica column (.3 mm I.D., thick film) or equivalent.

7.13 Mass flow controller - 10-200 mL/minute flow control range.

7.14 Permeation drier - PermaPure® - Model MD-125F, or equivalent. Alternate designs described in the literature (7-12) may also be acceptable.

8. Reagents and Materials

8.1 Glass beads - 60/80 mesh, silanized.

8.2 Glasswool - silanized.

8.3 Helium - zero grade compressed gas, 99.9999%.

8.4 Hydrogen - zero grade compressed gas, 99.9999%.

8.5 Air - zero grade compressed gas.

8.6 Liquid argon (or liquid oxygen).

8.7 Liquid nitrogen.

8.8 SRM 1805 - benzene in nitrogen standard. Available from the National Bureau of Standards. Additional such standards will become available in the future.

8.9 Chemical standards - neat compounds of interest, highest purity available.

9. Sampling and Analysis Apparatus

Two systems are described below which allow collection of an accurately known volume of air (100-1000 mL) onto a cryogenically cooled trap. The first system (Section 9.1) is an automated device described in the literature (8,9). The second system (Section 9.2) is a manual device, also described in the literature(2).

9.1 The automated sampling and analysis system is shown in Figure 3. This system is composed of an automated GC system (Hewlett Packard Model 5880A, Level 4, or equivalent) and a sample collection system (Nutech Model 320-01, or equivalent). The overall system is described in the literature (8).

9.1.1 The electronic console of the sampling unit controls the mechanical operation of the six-port valve and cryogenic trapping components as well as the temperatures in each of the three zones (sample trap, transfer line, and valve).

9.1.2 The valve (six-port air activated, Seiscor Model 8 or equivalent) and transfer line are constantly maintained at 120°C. During sample collection the trap temperature is maintained at -160 ± 5°C by a flow of liquid nitrogen controlled by a solenoid valve. A cylindrical 250 with heater, held in direct contact with the trap, is used to heat the trap to 120°C in 60 seconds or less during the sample desorption step. The construction of the sample trap is described in Section 7.3.

9.1.3 The sample flow is controlled by a pump/mass flow controller assembly, as shown in Figure 3. A sample flow of 10-100 mL/minute is generally employed, depending on the desired sampling period. A total volume of 100-1000 mL is commonly collected.

9.1.4 In many situations a permaselective drier (e.g., Nafion®) may be required to remove moisture from the sample. Such a device is installed at the sample inlet. Two configurations for such devices are available. The first configuration is the tube and shell type in which the sample flow tube is surrounded by an outer shell through which a countercurrent flow of clean, dry air is maintained. The dry air stream must be free from contaminants and its flow rate should be 3-4 times greater than the sample flow to achieve effective drying. A second configuration (7) involves placing a drying agent, e.g., magnesium carbonate, on the outside of the sample flow tube. This approach eliminates the need for a source of clean air in the field. However, contamination from the drying agent can be a problem.

9.2 The manual sampling consists of the sample volume measuring apparatus shown in Figure 4 connected to the cryogenic trap/GC assembly shown in Figure 1. The operation of this assembly is described below.

9.2.1 Pump-Down Position

The purpose of the pump-down mode of operation is to evacuate the ballast tank in preparation for collecting a sample as illustrated in Figure 4. (While in this position, helium can also be utilized to backflush the sample line, trap, etc. However, this cleaning procedure is not normally needed during most sampling operations). The pump used for evacuating the system should be capable of attaining 200 torr pressure.

9.2.2 Volume Measuring Position

Once the system has been sufficiently evacuated, the 4-way ball valve is switched to prepare for sample collection. The 3-position valve is used to initiate sample flow while the needle valve controls the rate of flow.

9.2.3 Sample Volume Calculation

The volume of air that has passed through the collection trap corresponds to a known change in pressure within the ballast tank (as measure by the Wallace Tiernan gauge). Knowing the volume, pressure change, and temperature of the system, the ideal gas law can be used to calculate the number of moles of air sampled. On a volume basis, this converts to the following equation:

$$V_s = \frac{)P}{760} \times \frac{298}{T_A + 273}$$

where

V_s = Volume sampled at 760 mm Hg pressure and 25°C.
)P = Change in pressure within the ballast tank, mm of Hg.
V = Volume of ballast tank and gauge.
T_A = Temperature of ballast tank, °C.

The internal volume of the ballast tank and gauge can be determined either by H_2O displacement or by injecting calibrated volumes of air into the system using large volume syringes, etc.

10. Sampling and Analysis Procedure - Manual Device

10.1 This procedure assumes the use of the manual sampling system described in Section 9.2.

10.2 Prior to sample collection, the entire assembly should be leak-checked. This task is accomplished by sealing the sampling inlet line, pumping the unit down and placing the unit in the flow measuring mode of operation. An initial reading on the absolute pressure gauge is taken and rechecked after 10 minutes. No apparent change should be detected.

10.3 Preparation for sample collection is carried out by switching the 6-port valve to the "fill" position and connecting the heated sample line to the sample source. Meanwhile the collection trap is heated to 150°C (or other appropriate temperature). The volume measuring apparatus is pumped-down and switched to the flow measuring mode. The 3-position valve is opened and a known volume of sample is then passed through the heated sample line and trap to purge the system.

10.4 After the system purge is completed, the 3-position valve is closed and the corresponding gauge pressure is recorded. The collection trap is then immersed into a dewar of liquid argon (or liquid oxygen) and the 3-position valve is temporarily opened to draw in a known volume of air, i.e. a change in pressure corresponds to a specific volume of air (see Section 9). Liquid nitrogen cannot be used as the cryogen since it will also condense oxygen from the air. Liquid oxygen represents a potential fire hazard and should not be employed unless absolutely necessary.

10.5 After sample collection is completed, the 6-port valve is switched to the inject position, the dewar is removed and the trap is heated to 150°C to transfer the sample components to the head of the GC column which is initially maintained at -50°C. Temperature programming is initiated to elute the compounds of interest.

10.6 A GC integrator (or data system if available) is activated during the injection cycle to provide component identification and quantification.

11. Sampling and Analysis Procedure - Automated Device

11.1 This procedure assumes the use of the automated system shown in Figure 3. The components of this system are discussed in Section 9.1.

11.2 Prior to initial sample collection the entire assembly should be leak-checked. This task is completed by sealing the sample inlet line and noting that the flow indication or the mass flow controller drops to zero (less than 1 mL/minute).

11.3 The sample trap, valve, and transfer line are heated to 120°C and ambient air is drawn through the apparatus (~60mL/minute) for a period of time 5-10 minutes to flush the system, with the sample valve in the inject position. During this time the GC column is maintained at 150°C to condition the column.

11.4 The sample trap is then cooled to -160 ± 5°C using a controlled flow of liquid nitrogen. Once the trap temperature has stabilized, sample flow through the trap is initiated by placing the valve in the inject position and the desired volume of air is collected.

11.5 During the sample collection period the GC column is stabilized at -50°C to allow for immediate injection of the sample after collection.

11.6 At the end of the collection period the valve is immediately placed in the inject position, and the cryogenic trap is rapidly heated to 120°C to desorb the components onto GC column. The GC temperature program and data acquisition are initiated at this time.

11.7 At the desired time the cryogenic trap is cooled to -160°C, the valve is returned to the collect position and the next sample collection is initiated (to coincide with the completion of the GC analysis of the previous sample).

12. Calibration Procedure

Prior to sample analysis, and approximately every 4-6 hours thereafter, a calibration standard must be analyzed, using the identical procedure employed for ambient air samples (either Section 10 or 11). This section describes three alternative approaches for preparing suitable standards.

12.1 Teflon® (or Tedlar®) Bags

12.1.1 The bag (nominal size; 20L) is filled with zero air and leak checked. This can be easily accomplished by placing a moderate weight (text book) on the inflated bag and leaving overnight. No visible change in bag volume indicates a good seal. The bag should also be equipped with a quick-connect fitting for sample withdrawal and an insertion port for liquid injections (Figure 2).

12.1.2 Before preparing a standard mixture, the bag is sequentially filled and evacuated with zero air (5 times). After the 5th filling, a sample blank is obtained using the sampling procedure outlined in Section 10.

12.1.3 In order to prepare a standard mixture, the bag is filled with a known volume of zero air. This flow should be measured via a calibrated mass flow controller or equivalent flow measuring device. A measured aliquot of each analyte of interest is injected into the bag through the insertion port using a microliter syringe. For those compounds with vapor pressures lower than benzene or for strongly adsorbed species, the bag should be heated (60° C oven) during the entire calibration period.

12.1.4 To withdraw a sample for analysis, the sampling line is directly connected to the bag. Quick connect fittings allow this hook-up to be easily accomplished and also minimizes bag contamination from laboratory air. Sample collection is initiated as described.

12.2 Glass Flasks

12.2.1 If a glass flask is employed (Figure 2) the exact volume is determined by weighing the flask before and after filling with deionized water. The flask is dried by heating at 200°C.

12.2.2 To prepare a standard, the dried flask is flushed with zero air until cleaned (i.e., a blank run is made). An appropriate aliquot of

each analyte is injected using the same procedures as described for preparing bag standards.

12.2.3 To withdraw a standard for analysis, the GC sampling line is directly connected to the flask and a sample obtained. However, because the flask is a rigid container, it will not remain at atmospheric pressure after sampling has commenced. In order to prevent room air leakage into the flask, it is recommended that no more than 10% of the initial volume be exhausted during the calibration period (i.e., 200cc if a 2 liter flask is used).

12.3 Pressurized Gas Cylinders

12.3.1 Pressurized gas cylinders containing selected analytes at ppb concentrations in air can be prepared or purchased. A limited number of analytes (e.g., benzene, propane) are available from NBS.

12.3.2 Specialty gas suppliers will prepare custom gas mixtures, and will cross reference the analyte concentrations to an NBS standard for an additional charge. In general, the user should purchase such custom mixtures, ratherthan attempting to prepare them because of the special high pressure filling apparatus required. However, the concentrations should be checked, either by the supplier or the user using NBS reference materials.

12.3.3 Generally, aluminum cylinders are suitable since most analytes of potential interest in this method have been shown to be stable for at least several months in such cylinders. Regulators constructed of stainless steel and Teflon® (no silicon or neoprene rubber).

12.3.4 Before use the tank regulator should be flushed by alternately pressuring with the tank mixture, closing the tank valve, and venting the regulator contents to the atmosphere several times.

12.3.5 For calibration, a continuous flow of the gas mixture should be maintained through a glass or Teflon® manifold from which the calibration

standard is drawn. To generate various calibration concentrations, the pressurized gas mixture can be diluted, as desired, with zero grade air using a dynamic dilution system (e.g., CSI Model 1700).

13. Calibration Strategy

13.1 Vapor phase standards can be prepared with either neat liquids or diluted liquid mixtures depending upon the concentration levels desired. It is recommended that benzene also be included in this preparation scheme so that flame ionization detector response factors, relative to benzene, can be determined for the other compounds. The benzene concentration generated in this fashion should be cross-checked with an NBS (e.g., SRM 1805) for accuracy determinations.

13.2 Under normal conditions, weekly multipoint calibrations should be conducted. Each multipoint calibration should include a blank run and four concentration levels for the target species. The generated concentrations should bracket the expected concentration of ambient air samples.

13.3 A plot of nanograms injected versus area using a linear least squares fit of the calibration data will yield the following equation:

$$Y = A + BX$$

where

Y = quantity of component, nanograms
A = intercept
B = slope (response factor)

If substantial nonlinearity is present in the calibration curve a quadratic fit of the data can be used:

$$Y = A + BX + CX^2$$

where

C = constant

Alternatively, a stepwise multilevel calibration scheme may be used if more convenient for the data system in use.

14. Performance Criteria and Quality Assurance

This section summarizes the quality assurance (QA) measures and provides guidance concerning performance criteria which should be achieved within each laboratory.

14.1 Standard Operating Procedures (SOPs)

14.1.1 Each user should generate SOPs describing the following activities as accomplished in their laboratories:

1) assembly, calibration and operation of the sampling system.
2) preparation and handling of calibration standards.
3) assembly, calibration and operation of the GC/FID system and
4) all aspects of data recording and processing.

14.1.2 SOPs should provide specific stepwise instructions and should be readily available to, and understood by, the laboratory personnel conducting the work.

14.2 Method Sensitivity, Precision and Accuracy

14.2.1 System sensitivity (detection limit) for each component is calculated from the data obtained for calibration standards. The detection limit is defined as

$$DL = A + 3.3S$$

where

DL = calculated detection limit in nanograms injected.
A = intercept calculated in Section 13.
S = standard deviation of replicate determination of the lowest level standard (at least three determinations are required).

For many compounds detection limits of 1 to 5 nanograms are found using the flame ionization detection. Lower detection limits can be obtained for chlorinated hydrocarbons using the electron capture detector.

14.2.2 A precision of ± 5% (relative standard deviation) can be readily achieved at concentrations 10 times the detection limit. Typical performance data are included in Table 1.

14.2.3 Method accuracy is estimated to be within ± 10%, based on National Bureau of Standard calibrated mixtures.

REFERENCES

1. Holdren, M., Spicer, C., Sticksel, P., Nepsund, K., Ward, G., and Smith, R., "Implementation and Analysis of Hydrocarbon Grab Samples from Cleveland and Cincinnati 1981 Ozone Monitoring Study", EPA-905/4-82-001. U.S. Environmental Protection Agency, Research Triangle Park, North Carolina, 1982.

2. Westberg, H., Rasmussen, R., and Holdren, M., "Gas Chromatographic Analysis of Ambient Air for Light Hydrocarbons Using a Chemically Bonded Stationary Phase", Anal. Chem. 46, 1852-1854, 1974.

3. Lonneman, W. A., "Ozone and Hydrocarbon Measurements in Recent Oxidant Transport Studies", in Int. Conf. on Photochemical Oxidant Pollutant and Its Control Proceedings, EPA-600/3-77-001a, 1977.

4. Singh, H., "Guidance for the Collection and Use of Ambient Hydrocarbon Species Data in Development of Ozone Control Strategies", EPA-450/4-80-008. U.S. Environmental Protection Agency, Research Triangle Park, North Carolina, 1980.

5. Riggin, R. M., "Technical Assistance Document for Sampling and Analysis of Toxic Organic Compounds in Ambient Air", EPA-600/4-83-027. U.S. Environmental Protection Agency, Research Triangle Park, North Carolina, 1983.

6. Annual Book of ASTM Standards, Part 11.03, "Atmospheric Analysis", American Society for Testing and Materials, Philadelphia, Pennsylvania, 1983.

7. Foulger, B. E. and P. G. Sinamouds, "Drier for Field Use in the Determination of Trace Atmospheric Gases", Anal. Chem., 51, 1089-1090, 1979.

8. Pheil, J. D. and W. A. McClenney, "Reduced Temperature Preconcentration Gas Chromatographic Analysis of Ambient Vapor-Phase Organic Compounds: System Automation", Anal. Chem., submitted, 1984.

9. Holdren, M. W., W. A. McClenney, and R. N. Smith "Reduced Temperature Preconcentration and Gas Chromatographic Analysis of Ambient Vapor-Phase Organic Compounds: System Performance", Anal. Chem., submitted, 1984.

10. Holdren, M., S. Rust, R. Smith, and J. Koetz, "Evaluation of Cryogenic Trapping as a Means for Collecting Organic Compounds in Ambient Air", Draft Final Report on Contract No. 68-02-3487, 1984.

11. Cox, R. D. and R. E. Earp, "Determination of Trace Level Organics in Ambient Air by High-Resolution Gas Chromatography with Simultaneous Photoionization and Flame Ionization Detection", Anal. Chem. 54, 2265-2270, 1982.

12. Burns, W. F., O. T. Tingy, R. C. Evans and E. H. Bates, "Problems with a Nafion® Membrane Dryer for Chromatographic Samples", J. Chrom. 269, 1-9, 1983.

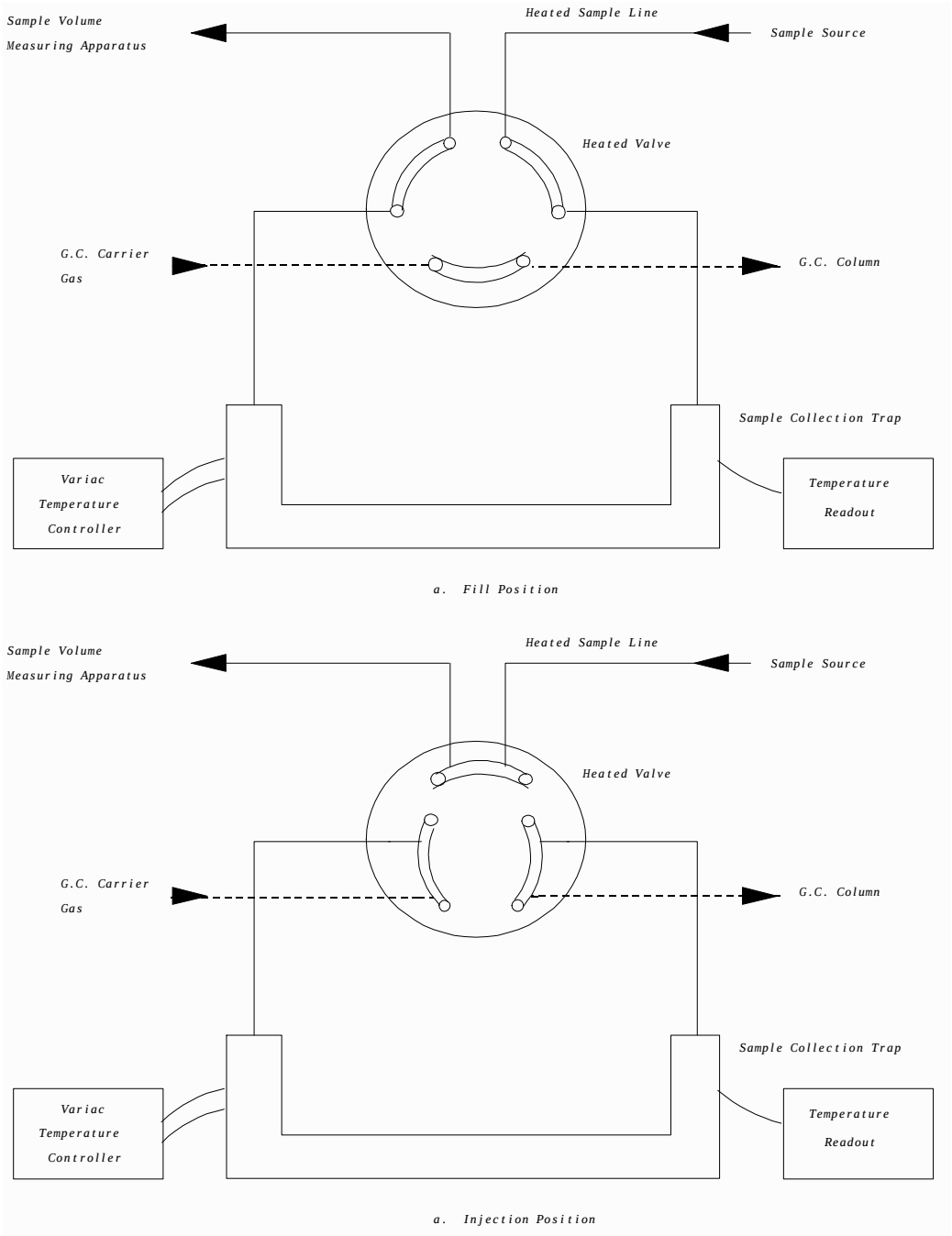

Figure 1. Schematic of Six-Port Valve Used for Sample Collection.

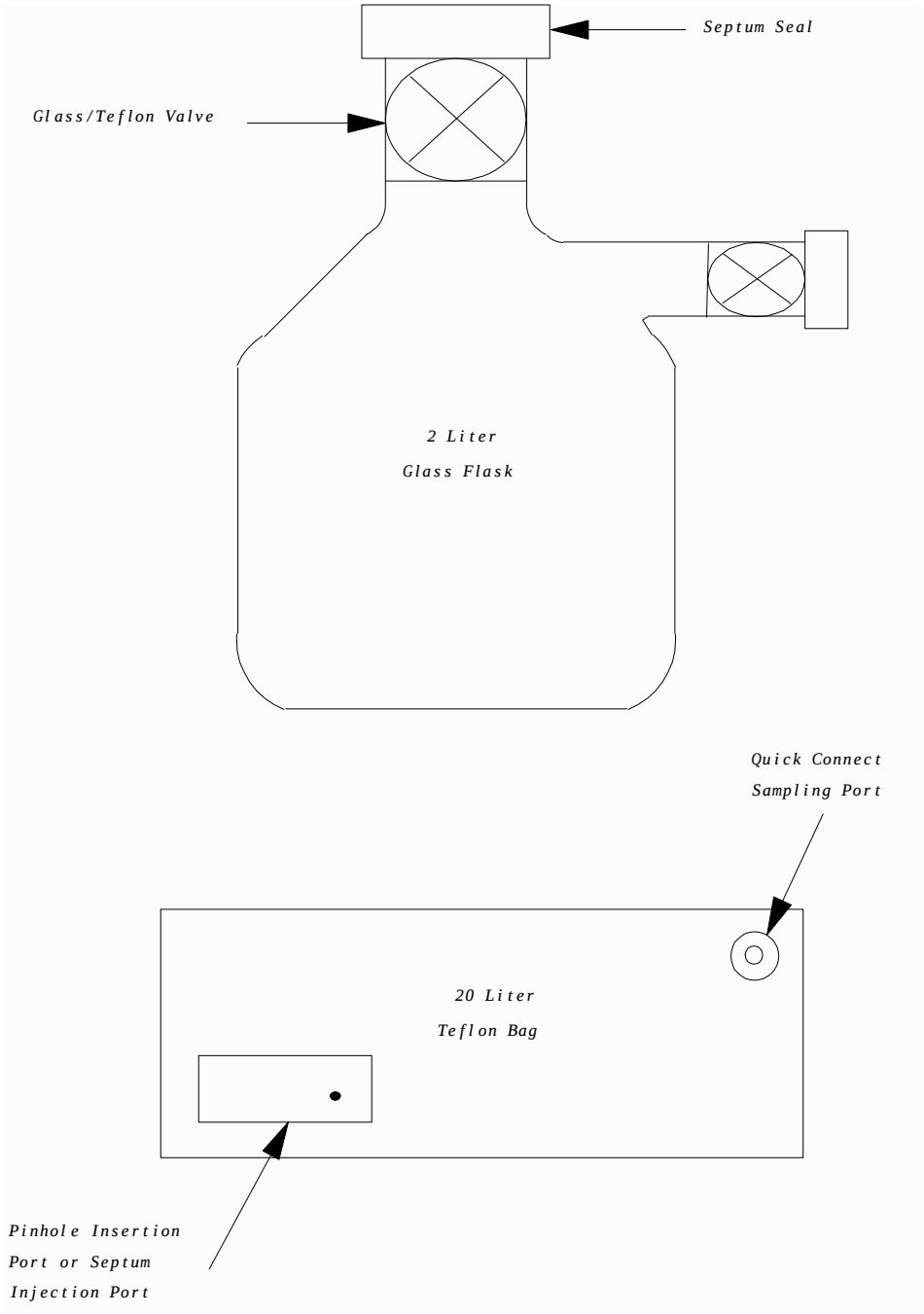

Figure 2. Dilution Containers for Standard Mixtures

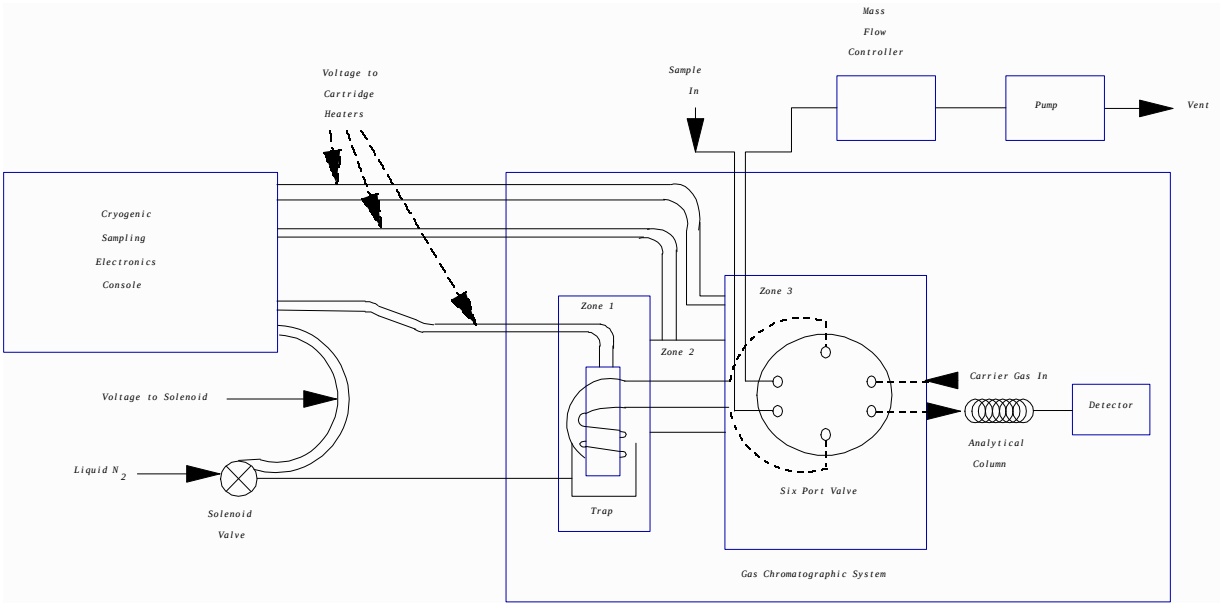

Figure 3. Automated Sampling and Analysis System for Cryogenic Trapping

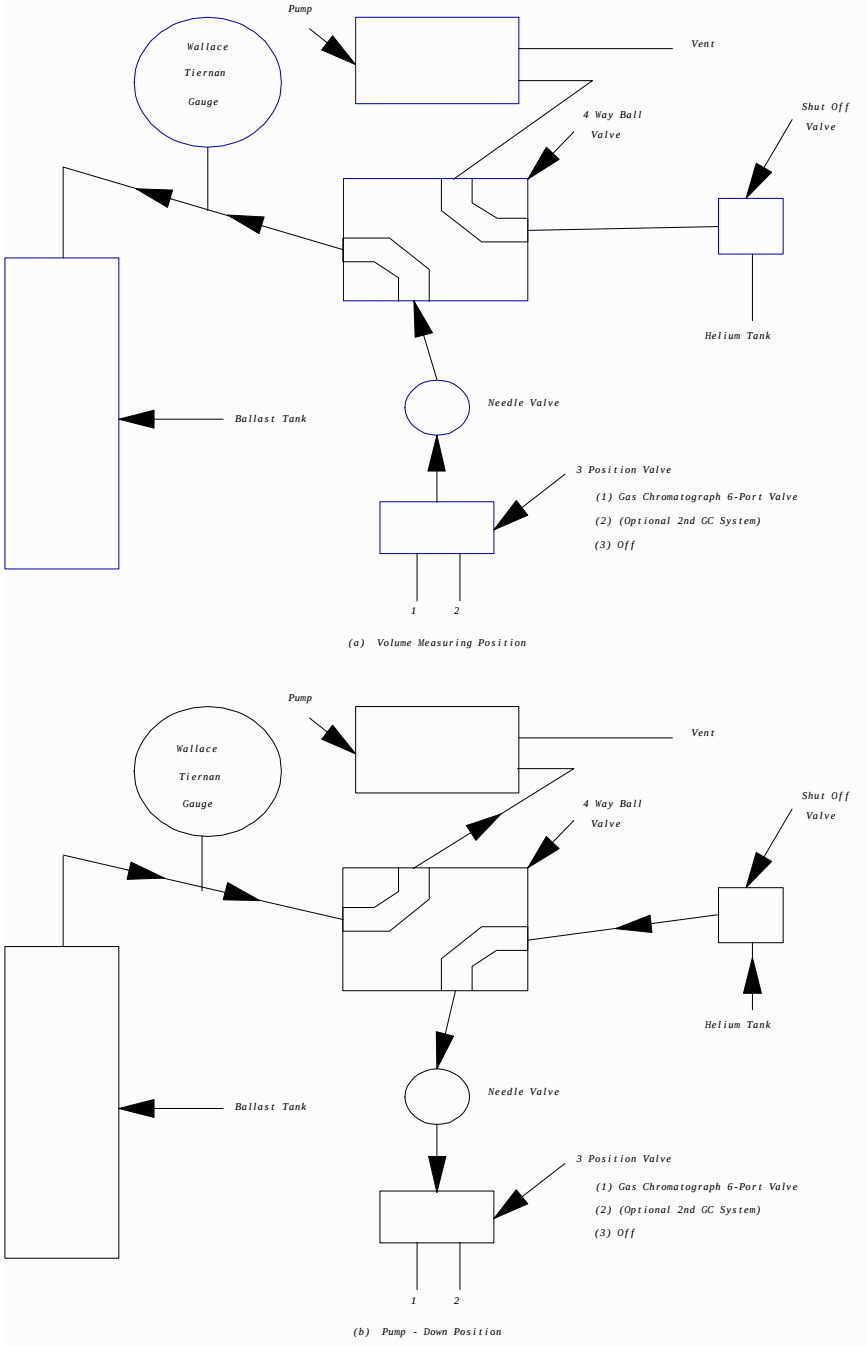

Figure 4. Sample Volume Measuring Apparatus

TABLE 1. VOLATILE ORGANIC COMPOUNDS FOR WHICH THE CRYOGENIC SAMPLING METHOD HAS BEEN EVALUATED[a]

Compound	Retention Time, Minutes[b]	Test 1 (4 runs, 200cc samples) Mean (ppb)	%RSD	Test 2 (8 runs, 200-cc samples) Mean (ppb)	%RSD
Vinylidene Chloride	9.26	144	4.4	6.1	3.9
Chloroform	12.16	84	3.8	3.5	5.8
1,2-Dichloroethane	12.80	44	3.7	1.9	5.1
Methylchloroform	13.00	63	4.5	2.7	4.9
Benzene	13.41	93	4.0	3.9	5.1
Trichloroethylene	14.48	84	3.7	3.5	4.1
Tetrachloroethylene	17.37	69	3.7	2.9	4.3
Chlorobenzene	18.09	46	3.3	1.9	3.2

[a] Recovery efficiencies were 100 ± 5% as determined by comparing direct sample loop (5cc) injections with cryogenic collection techniques (using test 1 data). Data from reference 10.

[b] GC conditions as follows:

Column - Hewlett Packard, crosslinked methyl silicone, 0.32 m ID x 50 m long, thick film, fused silica.

Temperature Program - 50°C for 2 minutes, then increased at 8°C/minute to 150°C.

EPA/625/R-96/010b

Compendium of Methods for the Determination of Toxic Organic Compounds in Ambient Air

Second Edition

Compendium Method TO-4A

Determination of Pesticides and Polychlorinated Biphenyls in Ambient Air Using High Volume Polyurethane Foam (PUF) Sampling Followed by Gas Chromatographic/Multi-Detector Detection (GC/MD)

Center for Environmental Research Information
Office of Research and Development
U.S. Environmental Protection Agency
Cincinnati, OH 45268

January 1999

Method TO-4A
Acknowledgements

This Method was prepared for publication in the *Compendium of Methods for the Determination of Toxic Organic Compounds in Ambient Air, Second Edition* (EPA/625/R-96/010b), which was prepared under Contract No. 68-C3-0315, WA No. 3-10, by Midwest Research Institute (MRI), as a subcontractor to Eastern Research Group, Inc. (ERG), and under the sponsorship of the U.S. Environmental Protection Agency (EPA). Justice A. Manning, John O. Burckle, and Scott R. Hedges, Center for Environmental Research Information (CERI), and Frank F. McElroy, National Exposure Research Laboratory (NERL), all in the EPA Office of Research and Development (ORD), were responsible for overseeing the preparation of this method. Additional support was provided by other members of the Compendia Workgroup, which include:

- John O. Burckle, U.S. EPA, ORD, Cincinnati, OH
- James L. Cheney, Corps of Engineers, Omaha, NB
- Michael Davis, U.S. EPA, Region 7, KC, KS
- Joseph B. Elkins Jr., U.S. EPA, OAQPS, RTP, NC
- Robert G. Lewis, U.S. EPA, NERL, RTP, NC
- Justice A. Manning, U.S. EPA, ORD, Cincinnati, OH
- William A. McClenny, U.S. EPA, NERL, RTP, NC
- Frank F. McElroy, U.S. EPA, NERL, RTP, NC
- Heidi Schultz, ERG, Lexington, MA
- William T. "Jerry" Winberry, Jr., EnviroTech Solutions, Cary, NC

Method TO-4 was originally published in April of 1984 as one of a series of peer reviewed methods in *"Compendium of Methods for the Determination of Toxic Organic Compounds in Ambient Air,"* EPA 600/4-89-018. In an effort to keep these methods consistent with current technology, Method TO-4 has been revised and updated as Method TO-4A in this Compendium to incorporate new or improved sampling and analytical technologies. In addition, this method incorporates ASTM Method D 4861-94, *Standard Practice for Sampling and Analysis of Pesticides and Polychlorinated Biphenyls in Air*.

This Method is the result of the efforts of many individuals. Gratitude goes to each person involved in the preparation and review of this methodology.

Author(s)

- William T. "Jerry" Winberry, Jr., EnviroTech Solutions, Cary, NC
- Ralph Riggin, Battelle Laboratories, Columbus, OH
- Robert G. Lewis, U.S. EPA, NERL, RTP, NC

Peer Reviewers

- Irene D. DeGraff, Supelco, Bellefonte, PA
- Ronald A. Hiles, Indiana University, Bloomington, IN
- Lauren Drees, U.S. EPA, NRMRL, Cincinnati, OH

Finally, recognition is given to Frances Beyer, Lynn Kaufman, Debbie Bond, Cathy Whitaker, and Kathy Johnson of Midwest Research Institute's Administrative Services staff whose dedication and persistence during the development of this manuscript has enabled it's production.

DISCLAIMER

This Compendium has been subjected to the Agency's peer and administrative review, and it has been approved for publication as an EPA document. Mention of trade names or commercial products does not constitute endorsement or recommendation for use.

METHOD TO-4A

Determination of Pesticides and Polychlorinated Biphenyls in Ambient Air Using High Volume Polyurethane Foam (PUF) Sampling Followed by Gas Chromatographic/Multi-Detector Detection (GC/MD)

TABLE OF CONTENTS

Page

1. Scope 4A-1

2. Summary of Method 4A-1

3. Significance 4A-2

4. Applicable Documents 4A-2
   4.1 ASTM Standards 4A-2
   4.2 EPA Documents 4A-2
   4.3 Other Documents 4A-3

5. Definitions 4A-3

6. Interferences 4A-4

7. Safety 4A-4

8. Apparatus 4A-5
   8.1 Sampling 4A-5
   8.2 Sample Clean-up and Concentration 4A-6
   8.3 Sample Analysis 4A-7

9. Equipment and Materials 4A-7
   9.1 Materials for Sample Collection 4A-7
   9.2 Sample Extraction and Concentration 4A-8
   9.3 GC/MS Sample Analysis 4A-8

10. Preparation of PUF Sampling Cartridge 4A-9
   10.1 Summary of Method 4A-9
   10.2 Preparation of Sampling Cartridge 4A-9
   10.3 Procedure for Certification of PUF Cartridge Assembly 4A-10

11. Assembly, Calibration and Collection Using High-Volume Sampling System 4A-11
   11.1 Description of Sampling Apparatus 4A-11
   11.2 Calibration of Sampling System 4A-11
   11.3 Sample Collection 4A-18

TABLE OF CONTENTS (continued)

Page

12. Sample Extraction Procedure 4A-20
    12.1 Sample Extraction 4A-20
    12.2 Sample Cleanup 4A-21

13. Analytical Procedure 4A-22
    13.1 Analysis Organochlorine Pesticides by Capillary Gas Chromatography with Electron Capture Detector (GC/ECD) 4A-22
    13.2 Analysis of Organophosphorus Pesticides by Capillary Gas Chromatography with Flame Photometric or Nitrogen-Phosphorus Detectors (GC/FPD/NPD) 4A-23
    13.3 Analysis of Carbamate and Urea Pesticides by Capillary Gas Chromatography with Nitrogen-Phosphorus Detector 4A-23
    13.4 Analysis of Carbamate, Urea, Pyrethroid, and Phenolic Pesticides by High Performance Liquid Chromatography (HPLC) 4A-24
    13.5 Analysis of Pesticides and PCBs by Gas Chromatography with Mass Spectrometry Detection (GC/MS) 4A-24
    13.6 Sample Concentration 4A-25

14. Calculations 4A-25
    14.1 Determination of Concentration 4A-25
    14.2 Equations 4A-25

15. Performance Criteria and Quality Assurance 4A-27
    15.1 Standard Operating Procedures (SOPs) 4A-28
    15.2 Process, Field, and Solvent Blanks 4A-28
    15.3 Method Precision and Bias 4A-28
    15.4 Method Safety 4A-29

16. References 4A-29

METHOD TO-4A

Determination of Pesticides and Polychlorinated Biphenyls in Ambient Air Using High Volume Polyurethane Foam (PUF) Sampling Followed by Gas Chromatographic/Multi-Detector Detection (GC/MD)

1. Scope

1.1 This document describes a method for sampling and analysis of a variety of common pesticides and for polychlorinated biphenyls (PCBs) in ambient air. The procedure is based on the adsorption of chemicals from ambient air on polyurethane foam (PUF) using a high volume sampler.

1.2 The high volume PUF sampling procedure is applicable to multicomponent atmospheres containing common pesticide concentrations from 0.001 to 50 $\mu g/m^3$ over 4- to 24-hour sampling periods. The limits of detection will depend on the nature of the analyte and the length of the sampling period.

1.3 Specific compounds for which the method has been employed are listed in Table 1. The analytical methodology described in Compendium Method TO-4A is currently employed by laboratories throughout the U.S. The sampling methodology has been formulated to meet the needs of common pesticide and PCB sampling in ambient air.

1.4 Compendium Method TO-4 was originally published in 1989 (1). Further updates of the sampling protocol were published as part of Compendium Method TO-13 (2). The method was further modified for indoor air application in 1990 (3). In an effort to keep the method consistent with current technology, Compendium Method TO-4 has incorporated the sampling and analytical procedures in ASTM Method D4861-94 (4) and is published here as Compendium Method TO-4A.

2. Summary of Method

2.1 A high-volume (~8 cfm) sampler is used to collect common pesticides and PCBs on a sorbent cartridge containing PUF. Airborne particles may also be collected, but the sampling efficiency is not known (5). The sampler is operated for 24-hours, after which the sorbent is returned to the laboratory for analysis.

2.2 Pesticides and PCBs are extracted from the sorbent cartridge with 10 percent diethyl ether in hexane and determined by gas chromatography coupled with an electron capture detector (ECD), nitrogen-phosphorus detector (NPD), flame photometric detector (FPD), Hall electrolytic conductivity detector (HECD), or a mass spectrometer (MS). For common pesticides, high performance liquid chromatography (HPLC) coupled with an ultraviolet (UV) detector or electrochemical detector may be preferable.

2.3 Interferences resulting from analytes having similar retention times during GC analysis are resolved by improving the resolution or separation, such as by changing the chromatographic column or operating parameters, or by fractionating the sample by column chromatography.

3. Significance

3.1 Pesticide usage and environmental distribution are common to rural and urban areas of the United States. The application of pesticides can cause adverse health effects to humans by contaminating soil, water, air, plants, and animal life. PCBs are less widely used, due to extensive restrictions placed on their manufacturer. However, human exposure to PCBs continues to be a problem because of their presence in various electrical products.

3.2 Many pesticides and PCBs exhibit bioaccumulative, chronic health effects; therefore, monitoring the presence of these compounds in ambient air is of great importance.

3.3 The relatively low levels of such compounds in the environment requires the use of high volume sampling techniques to acquire sufficient sample for analysis. However, the volatility of these compounds prevents efficient collection on filter media. Consequently, Compendium Method TO-4A utilizes both a filter and a PUF backup cartridge which provides for efficient collection of most common pesticides, PCBs, and many other organics within the same volatility range.

3.4 Moreover, modifications to this method has been successfully applied to measurement of common pesticides and PCBs in outdoor air (6), indoor air (3) and for personal respiratory exposure monitoring (3).

4. Applicable Documents

4.1 ASTM Standards

- D1356 *Definition of Terms Relating to Atmospheric Sampling and Analysis*
- D4861-94 *Standard Practice for Sampling and Analysis of Pesticides and Polychlorinated Biphenyls in Air*
- E260 *Recommended Practice for General Gas Chromatography Procedures*
- E355 *Practice for Gas Chromatography Terms and Relationships*
- D3686 *Practice for Sampling Atmospheres to Collect Organic Compound Vapors (Activated Charcoal Tube Adsorption Method*
- D3687 *Practice for Analysis of Organic Compound Vapors Collected by the Activated Charcoal Tube Adsorption*
- D4185 *Practice for Measurement of Metals in Workplace Atmosphere by Atomic Absorption Spectrophotometry*

4.2 EPA Documents

- *Compendium of Methods for the Determination of Toxic Organic Compounds in Ambient Air: Method TO-10, Second Supplement,* U. S. Environmental Protection Agency, EPA 600/4-89-018, March 1989.
- *Manual of Analytical Methods for Determination of Pesticides in Humans and Environmental Standards,* U. S. Environmental Protection Agency, EPA 600/8-80-038, June 1980.
- *Compendium of Methods for the Determination of Air Pollutants in Indoor Air: Method IP-8,* U. S. Environmental Protection Agency, EPA 600/4-90-010, May 1990.

4.3 Other Documents

- Code of Federal Regulations, Title 40, Part 136, Method 604

5. Definitions

[Note: Definitions used in this document and in any user-prepared Standard operating procedures (SOPs) should be consistent with ASTM D1356, E260, and E355. All abbreviations and symbols are defined within this document at point of use.]

5.1 Sampling efficiency (SE)-ability of the sampling medium to trap analytes of interest. The percentage of the analyte of interest collected and retained by the sampling medium when it is introduced as a vapor in air or nitrogen into the air sampler and the sampler is operated under normal conditions for a period of time equal to or greater than that required for the intended use is indicated by %SE.

5.2 Retention efficiency (RE)-ability of sampling medium to retain a compound added (spiked) to it in liquid solution.

5.3 Retention time (RT)-time to elute a specific chemical from a chromatographic column, for a specific carrier gas flow rate, measured from the time the chemical is injected into the gas stream until it appears at the detector.

5.4 Relative retention time (RRT)-a rate of RTs for two chemicals for the same chromatographic column and carrier gas flow rate, where the denominator represents a reference chemical.

5.5 Method detection limit (MDL)-the minimum concentration of a substance that can be measured and reported with confidence and that the value is above zero.

5.6 Kuderna-Danish apparatus-the Kuderna-Danish (K-D) apparatus is a system for concentrating materials dissolved in volatile solvents.

5.7 MS-SIM-the GC is coupled to a mass spectrometer where the instrument is programmed to acquire data for only the target compounds and to disregard all others, thus operating in the select ion monitoring mode (SIM). This is performed using SIM coupled to retention time discriminators. The SIM analysis procedure provides quantitative results.

5.8 Sublimation-the direct passage of a substance from the solid state to the gaseous state and back into the solid form without any time appearing in the liquid state. Also applied to the conversion of solid to vapor without the later return to solid state, and to a conversion directly from the vapor phase to the solid state.

5.9 Surrogate standard-a chemically compound (not expected to occur in the environmental sample) which is added to each sample, blank and matrix spiked sample before extraction and analysis. The recovery of the surrogate standard is used to monitor unusual matrix effects, gross sample processing errors, etc. Surrogate recovery is evaluated for acceptance by determining whether the measured concentration falls within acceptable limits.

6. Interferences

6.1 Any gas or liquid chromatographic separation of complex mixtures of organic chemicals is subject to serious interference problems due to coelution of two or more compounds. The use of capillary or microbore columns with superior resolution or two or more columns of different polarity will frequently eliminate these problems. In addition, selectivity may be further enhanced by use of a MS operated in the selected ion monitoring (SIM) mode as the GC detector. In this mode, co-eluting compounds can often be determined.

6.2 The ECD responds to a wide variety of organic compounds. It is likely that such compounds will be encountered as interferences during GC/ECD analysis. The NPD, FPD, and HECD detectors are element specific, but are still subject to interferences. UV detectors for HPLC are nearly universal, and the electrochemical detector may also respond to a variety of chemicals. Mass spectrometric analyses will generally provide positive identification of specific compounds.

6.3 PCBs and certain common pesticides (e.g., chlordane) are complex mixtures of individual compounds which can cause difficulty in accurately quantifying a particular formulation in a multiple component mixture. PCBs may interfere with the determination of pesticides.

6.4 Contamination of glassware and sampling apparatus with traces of pesticides or PCBs can be a major source of error, particularly at lower analyte concentrations. Careful attention to cleaning and handling procedures is required during all steps of sampling and analysis to minimize this source of error.

6.5 The general approaches listed below should be followed to minimize interferences.

6.5.1 Polar compounds, including certain pesticides (e.g., organophosphorus and carbamate classes) can be removed by column chromatography on alumina. Alumina clean-up will permit analysis of most common pesticides and PCBs (7).

6.5.2 PCBs may be separated from other common pesticides by column chromatography on silicic acid (8,9).

6.5.3 Many pesticides can be fractionated into groups by column chromatography on Florisil (9).

7. Safety

7.1 The toxicity or carcinogencity of each reagent used in this method has not been precisely defined; however, each chemical compound should be treated as a potential health hazard. From this viewpoint, exposure to these chemicals must be reduced to the lowest possible level by whatever means available. The laboratory is responsible for maintaining a current awareness file of Occupational Safety and Health Administration (OSHA) regulations regarding the safe handling of the chemicals specified in this method. A reference file of material data handling sheets should also be made available to all personnel involved in the chemical analysis. Additional references to laboratory safety are available and have been identified for the analyst (10-12).

7.2 PCBs have been classified as a known or suspected, human or mammalian carcinogen. Many of the other common pesticides have been classified as carcinogens. Care must be exercised when working with these substances. This method does not purport to address all safety problems associated with its use. It is the responsibility of whoever uses this method to consult and establish appropriate safety and health practices and

determine the applicability of regulatory limitations prior to use. The user should be thoroughly familiar with the chemical and physical properties of targeted substances.

7.3 Treat all target analytes as carcinogens. Neat compounds should be weighed in a glove box. Spent samples and unused standards are toxic waste and should be disposed according to regulations. Regularly check counter tops and equipment with "black light" for fluorescence as an indicator of contamination.

7.4 The collection efficiency for common pesticides and PCBs has been demonstrated to be greater than 95 percent for the sampling configuration described in the method (filter and backup adsorbent). Therefore, no field recovery evaluation will occur as part of this procedure.

8. Apparatus

[Note: This method was developed using the PS-1 semi-volatile sampler provided by General Metal Works, Village of Cleves, OH as a guideline. EPA has experience in use of this equipment during various field monitoring programs over the last several years. Other manufacturers' equipment should work as well. However, modifications to these procedures may be necessary if another commercially available sampler is selected.]

8.1 Sampling

8.1.1 High-volume sampler (see Figure 1). Capable of pulling ambient air through the filter/adsorbent cartridge at a flow rate of approximately 8 standard cubic feet per minute (scfm) (0.225 std m^3/min) to obtain a total sample volume of greater than 300 scm over a 24-hour period. Major manufacturers are:

- Tisch Environmental, Village of Cleves, OH
- Andersen Instruments Inc., 500 Technology Ct., Smyrna, GA
- Thermo Environmental Instruments, Inc., 8 West Forge Parkway, Franklin, MA

8.1.2 Sampling module (see Figure 2). Metal filter holder (Part 2) capable of holding a 102-mm circular particle filter supported by a 16-mesh stainless-steel screen and attaching to a metal cylinder (Part 1) capable of holding a 65-mm O.D. (60-mm I.D.) x 125-mm borosilicate glass sorbent cartridge containing PUF. The filter holder is equipped with inert sealing gaskets (e.g., polytetrafluorethylene) placed on either side of the filter. Likewise, inert, pliable gaskets (e.g., silicone rubber) are used to provide an air-tight seal at each end of the glass sorbent cartridge. The glass sorbent cartridge is indented 20 mm from the lower end to provide a support for a 16-mesh stainless-steel screen that holds the sorbent. The glass sorbent cartridge fits into Part 1, which is screwed onto Part 2 until the sorbent cartridge is sealed between the silicone gaskets. Major manufacturers are:

- Tisch Environmental, Village of Cleves, OH
- Andersen Instruments Inc., 500 Technology Ct., Smyrna, GA
- Thermo Environmental Instruments, Inc., 8 West Forge Parkway, Franklin, MA

A field portable unit has been developed by EPA (see Figure 3).

8.1.3 High-volume sampler calibrator. Capable of providing multipoint resistance for the high-volume sampler. Major manufacturers are:

- Tisch Environmental, Village of Cleves, OH
- Andersen Instruments Inc., 500 Technology Ct., Smyrna, GA
- Thermo Environmental Instruments, Inc., 8 West Forge Parkway, Franklin, MA

8.1.4 Ice chest. To hold samples at <4°C or below during shipment to the laboratory after collection.

8.1.5 Data sheets. For each sample for recording the location and sample time, duration of sample, starting time, and volume of air sampled.

8.2 Sample Clean-up and Concentration (see Figure 4).

8.2.1 Soxhlet apparatus extractor (see Figure 4a). Capable of extracting filter and adsorbent cartridges (2.3" x 5" length), 1,000 mL flask, and condenser, best source.

8.2.2 Pyrex glass tube furnace system. For activating silica gel at 180°C under purified nitrogen gas purge for an hour, with capability of raising temperature gradually, best source.

8.2.3 Glass vial. 40 mL, best source.

8.2.4 Erlenmeyer flask. 50 mL, best source.

[Note: Reuse of glassware should be minimized to avoid the risk of cross contamination. All glassware that is used, especially glassware that is reused, must be scrupulously cleaned as soon as possible after use. Rinse glassware with the last solvent used in it and then with high-purity acetone and hexane. Wash with hot water containing detergent. Rinse with copious amount of tap water and several portions of distilled water. Drain, dry, and heat in a muffle furnace at 400°C for 4 hours. Volumetric glassware must not be heated in a muffle furnace; rather, it should be rinsed with high-purity acetone and hexane. After the glassware is dry and cool, rinse it with hexane, and store it inverted or capped with solvent-rinsed aluminum foil in a clean environment.]

8.2.5 White cotton gloves. For handling cartridges and filters, best source.

8.2.6 Minivials. 2 mL, borosilicate glass, with conical reservoir and screw caps lined with Teflon®-faced silicone disks, and a vial holder, best source.

8.2.7 Teflon®-coated stainless steel spatulas and spoons. Best source.

8.2.8 Kuderna-Danish (K-D) apparatus (see Figure 4b). 500 mL evaporation flask (Kontes K-570001-500 or equivalent), 10 mL graduated concentrator tubes (Kontes K570050-1025 or equivalent) with ground-glass stoppers, and 3-ball macro Snyder Column (Kontes K-570010500, K-50300-0121, and K-569001-219, or equivalent), best source.

8.2.9 Adsorption column for column chromatography (see Figure 4c). 1-cm x 10-cm with stands.

8.2.10 Glove box. For working with extremely toxic standards and reagents with explosion-proof hood for venting fumes from solvents, reagents, etc.

8.2.11 Vacuum oven. Vacuum drying oven system capable of maintaining a vacuum at 240 torr (flushed with nitrogen) overnight.

8.2.12 Concentrator tubes and a nitrogen evaporation apparatus with variable flow rate. Best source.

8.2.13 Laboratory refrigerator. Best source.

8.2.14 Boiling chips. Solvent extracted, 10/40 mesh silicon carbide or equivalent, best source.

8.2.15 Water bath. Heated, with concentric ring cover, capable of ±5°C temperature control, best source.

8.2.16 Nitrogen evaporation apparatus. Best source.

8.2.17 Glass wool. High purity grade, best source.

8.3 Sample Analysis

8.3.1 Gas chromatograph (GC). The GC system should be equipped with appropriate detector(s) and either an isothermally controlled or temperature programmed heating oven. Improved detection limits may be obtained with a GC equipped with a cool on-column or splitless injector.

8.3.2 Gas chromatographic column. As an example, a 0.32-mm (I.D.) x 3-mm DB-5, DB-17, DB-608, DB-1701 are available. Other columns may also provide acceptable results.

8.3.3 HPLC column. As an example, a 4.6-mm x 25-cm Zorbax SIL or µBondpak C-18. Other columns may also provide acceptable results.

8.3.4 Microsyringes. 5 µL volume or other appropriate sizes.

8.3.5 Balance. Mettler balance or equivalent.

8.3.6 All required syringes, gases, and other pertinent supplies. To operate the GC/MS system.

8.3.7 Pipettes, micropipettes, syringes, burets, etc. To make calibration and spiking solutions, dilute samples if necessary, etc., including syringes for accurately measuring volumes such as 25 µL and 100 µL.

9. Equipment and Materials

9.1 Materials for Sample Collection (see Figure 5)

9.1.1 Quartz fiber filter. 102-millimeter bindless quartz microfiber filter, Whatman Inc., 6 Just Road, Fairfield, NJ 07004, Filter Type QMA-4.

9.1.2 Polyurethane foam (PUF) plugs (see Figure 5a). 3-inch thick sheet stock polyurethane type (density .022 g/cm^3). The PUF should be of the polyether type used for furniture upholstery, pillows, and mattresses. The PUF cylinders (plugs) should be slightly larger in diameter than the internal diameter of the cartridge. Sources of equipment are Tisch Environmental, Village of Cleves, OH; University Research Glassware, 116 S. Merritt Mill Road, Chapel Hill, NC; Thermo Environmental Instruments, Inc., 8 West Forge Parkway, Franklin, MA; Supelco, Supelco Park, Bellefonte, PA; and SKC Inc., 334 Valley View Road, Eighty Four, PA.

9.1.3 Teflon® end caps (see Figure 5a). For sample cartridge. Sources of equipment are Tisch Environmental, Village of Cleves, OH and University Research Glassware, Chapel Hill, NC.

9.1.4 Sample cartridge aluminum shipping containers (see Figure 5b). For sample cartridge shipping. Sources of equipment are Tisch Environmental, Village of Cleves, OH and University Research Glassware, Chapel Hill, NC.

9.1.5 Glass sample cartridge (see Figure 5a). For sample collection. Sources of equipment are Tisch Environmental, Village of Cleves, OH; Thermo Environmental Instruments, Inc., 8 West Forge Parkway, Franklin, MA; University Research Glassware, 116 S. Merritt Mill Road, Chapel Hill, NC; and Supelco, Supelco Park, Bellefonte, PA.

9.1.6 Aluminum foil. Best source.

9.1.7 Hexane, reagent grade. Best source.

9.2 Sample Extraction and Concentration

9.2.1 Methylene chloride. Chromatographic grade, glass-distilled, best source.

9.2.2 Sodium sulfate-anhydrous (ACS). Granular (purified by washing with methylene chloride followed by heating at 400°C for 4 hours in a shallow tray).

9.2.3 Boiling chips. Solvent extracted or heated in a muffle furnace at 450°C for 2 hours, approximately 10/40 mesh (silicon carbide or equivalent).

9.2.4 Nitrogen. High purity grade, best source.
9.2.5 Ether. Chromatographic grade, glass-distilled, best source.
9.2.6 Hexane. Chromatographic grade, glass-distilled, best source.
9.2.7 Dibromobiphenyl. Chromatographic grade, best source. Used for internal standard.
9.2.8 Decafluorobiphenyl. Chromatographic grade, best source. Used for internal standard.
9.2.9 Glass wool. Silanized, extracted with methylene chloride and hexane, and dried.
9.2.10 Diethyl ether. High purity, glass distilled.
9.2.11 Hexane. High purity, glass distilled.
9.2.12 Silica gel. High purity, type 60, 70-230 mesh.
9.2.13 Round bottom evaporative flask. 500 mL, T 24/40 joints, best source.
9.2.14 Capacity soxhlet extractors. 500 mL, with reflux condensers, best source.
9.2.15 Kuderna-Danish concentrator. 500 mL, with Snyder columns, best source.
9.2.16 Graduated concentrator tubes. 10 mL, with 19/22 stoppers, best source.
9.2.17 Graduated concentrator tubes. 1 mL, with 14/20 stoppers, best source.
9.2.18 TFE fluorocarbon tape. 1/2 in., best source.
9.2.19 Filter tubes. Size 40-mm (I.D.) x 80-mm.
9.2.20 Serum vials. 1 mL and 5 mL, fitted with caps lined with TFE fluorocarbon.
9.2.21 Pasteur pipetter. 9 in., best source.
9.2.22 Glass wool. Fired at 500°C, best source.
9.2.23 Alumina. Activity Grade IV, 100/200 mesh.
9.2.24 Glass chromatographic column. 2-mm I.D. x 15-cm long.
9.2.25 Vacuum oven. Connected to water aspirator, best source.
9.2.26 Die. Best source.
9.2.27 Ice chest. Best source.
9.2.28 Silicic Acid. Pesticide quality, best source.
9.2.29 Octachloronaphthalene (OCN). Research grade, best source.
9.2.30 Florisil. Pesticide quality, best source.

9.3 GC Sample Analysis

9.3.1 Gas cylinders of hydrogen, nitrogen, argon/methane, and helium. Ultra high purity, best source.
9.3.2 Combustion air. Ultra high purity, best source.
9.3.3 Zero air. Zero air may be obtained from a cylinder or zero-grade compressed air scrubbed with Drierite® or silica gel and 5A molecular sieve or activated charcoal, or by catalytic cleanup of ambient air. All zero air should be passed through a liquid argon cold trap for final cleanup.
9.3.4 Chromatographic-grade stainless steel tubing and stainless steel fitting. For interconnections, Alltech Applied Science, 2051 Waukegan Road, Deerfield, IL 60015, 312-948-8600, or equivalent.

[Note: All such materials in contact with the sample, analyte, or support gases prior to analysis should be stainless steel or other inert metal. Do not use plastic or Teflon® tubing or fittings.]

10. Preparation of PUF Sampling Cartridge

[Note: This method was developed using the PS-1 sample cartridge provider by General Metal Works, Village of Cleves, OH as a guideline. EPA has experience in use of this equipment during various field monitoring

programs over the last several years. Other manufacturers' equipment should work as well. However, modifications to these procedures may be necessary if another commercially available sampler is selected.]

10.1 Summary of Method

10.1.1 This part of Compendium Method TO-4A discusses pertinent information regarding the preparation and cleaning of the filter, adsorbent, and filter/adsorbent cartridge assembly. The separate batches of filters and adsorbents are extracted with the appropriate solvent.

10.1.2 At least one PUF cartridge assembly and one filter from each batch, or 10 percent of the batch, whichever is greater, should be tested and certified clean before the batch is considered for field use.

10.2 Preparation of Sampling Cartridge

10.2.1 Bake the Whatman QMA-4 quartz filters at 400°C for 5 hours before use.

10.2.2 Set aside the filters in a clean container for shipment to the field or prior to combining with the PUF glass cartridge assembly for certification prior to field deployment.

10.2.3 The PUF plugs are 6.0-cm diameter cylindrical plugs cut from 3-inch sheet stock and should fit, with slight compression, in the glass cartridge, supported by the wire screen (see Figure 2). During cutting, rotate the die at high speed (e.g., in a drill press) and continuously lubricate with deionized or distilled water. Pre-cleaned PUF plugs can be obtained from many of the commercial sources identified in Section 9.1.2.

10.2.4 For initial cleanup, place the PUF plugs in a Soxhlet apparatus and extract with acetone for 16 hours at approximately 4 cycles per hour. When cartridges are reused, use diethyl ether/hexane (10 percent volume/volume [v/v]) as the cleanup solvent.

[Note: A modified PUF cleanup procedure can be used to remove unknown interference components of the PUF blank. This method consists of rinsing 50 times with toluene, acetone, and diethyl ether/hexane (5 to 10 percent v/v), followed by Soxhlet extraction. The extracted PUF is placed in a vacuum oven connected to a water aspirator and dried at room temperature for approximately 2 to 4 hours (until no solvent odor is detected). Alternatively, they may be dried at room temperature in an air-tight container with circulating nitrogen (zero grade). Place the clean PUF plug into a labeled glass sampling cartridge using gloves and forceps. Wrap the cartridge with hexane-rinsed aluminum foil and placed in a jar fitted with TFE fluorocarbon-lined caps. The foil wrapping may also be marked for identification using a blunt probe. The extract from the Soxhlet extraction procedure from each batch may be analyzed to determine initial cleanliness prior to certification.]

10.2.5 Fit a nickel or stainless steel screen (mesh size 200/200) to the bottom of a hexane-rinsed glass sampling cartridge to retain the PUF adsorbents, as illustrated in Figure 2. Place the Soxhlet-extracted, vacuum-dried PUF (2.5-cm thick by 6.5-cm diameter) on top of the screen in the glass sampling cartridge using polyester gloves.

10.2.6 Wrap the sampling cartridge with hexane-rinsed aluminum foil, cap with the Teflon® end caps, place in a cleaned labeled aluminum shipping container, and seal with Teflon® tape. Analyze at least 1 PUF plug from each batch of PUF plugs using the procedure described in Section 10.3, before the batch is considered acceptable for field use. A blank level of <10 ng/plug and filter for single component compounds is considered to be acceptable. For multiple component mixtures (e.g., PCBs), the blank level should be <100 ng/plug and filter. Cartridges are considered clean for up to 30 days from date of certification when stored in their sealed containers.

10.3 Procedure for Certification of PUF Cartridge Assembly

10.3.1 Extract 1 filter and PUF adsorbent cartridge by Soxhlet extraction and concentrate using a Kuderna-Danish (K-D) evaporator for each lot of filters and cartridges sent to the field.

10.3.2 Assemble the Soxhlet apparatus. Charge the Soxhlet apparatus (see Figure 4a) with 300 mL of the extraction solvent [10 percent (v/v) diethyl ether/hexane] and reflux for 2 hours. Let the apparatus cool, disassemble it, and discard the used extraction solvent. Transfer the filter and PUF glass cartridge to the Soxhlet apparatus (the use of an extraction thimble is optional).

[Note: The filter and adsorbent assembly are extracted together in order to reach detection limits, to minimize cost and to prevent misinterpretation of the data. Separate analyses of the filter and PUF would not yield useful information about the physical state of most of the common pesticides and PCBs at the time of sampling due to evaporative losses of the analyte from the filter during sampling.]

10.3.3 Add between 300 and 350 mL of diethyl ether/hexane (10 percent v/v) to the Soxhlet apparatus. Reflux the sample for 18 hours at a rate of at least 3 cycles per hour. Allow to cool, then disassemble the apparatus.

10.3.4 Assemble a K-D concentrator (see Figure 4b) by attaching a 10-mL concentrator tube to a 500-mL evaporative flask.

10.3.5 Transfer the extract by pouring it through a drying column containing about 10 cm of anhydrous granular sodium sulfate (see Figure 4c) and collect the extract in the K-D concentrator. Rinse the Erlenmeyer flask and column with 20 to 30 mL of 10 percent diethyl ether/hexane to complete the quantitative transfer.

10.3.6 Add 1 or 2 clean boiling chips and attach a 3-ball Snyder column to the evaporative flask. Pre-wet the Snyder column by adding about 1 mL of the extraction solvent to the top of the column. Place the K-D apparatus on a hot water bath (50°C) so that the concentrator tube is partially immersed in the hot water, and the entire lower rounded surface of the flask is bathed with hot vapor. Adjust the vertical position of the apparatus and the water temperature as required to complete the concentration in one hour. At the proper rate of distillation, the balls of the column will actively chatter but the chambers will not flood with condensed solvent. When the apparent volume of liquid reaches approximately 5 mL, remove the K-D apparatus from the water bath and allow it to drain and cool for at least 5 minutes. Remove the Snyder column and rinse the flask and its lower joint into the concentrator tube with 5 mL of hexane. A 5-mL syringe is recommended for this operation.

[Note: The solvent may have to be exchanged to another solvent to meet the requirements of the analytical procedure selected for the target analytes.]

10.3.7 Concentrate the extract to 1 mL and analyze according to Section 13.

10.3.8 Acceptable levels of common pesticides must be less than 10 ng for each pair of filter and adsorbent assembly analyzed. For multiple component mixtures (e.g., PCBs), the blank level should be less than 100 ng for each pair of filter and adsorbent. Once certified clean, the cartridges can be shipped to the field without being chilled.

11. Assembly, Calibration and Collection Using High-Volume Sampling System

[Note: This method was developed using the PS-1 semi-volatile sampler provided by General Metal Works, Village of Cleves, OH as a guideline. EPA has experience in use of this equipment during various field monitoring programs over the last several years. Other manufacturers' equipment should work as well.

However, modifications to these procedures may be necessary if another commercially available sampler is selected.]

11.1 Description of Sampling Apparatus

The entire sampling system is diagrammed in Figure 1. This apparatus was developed to operate at a rate of 4 to 10 scfm (0.114 to 0.285 std m^3/min) and is used by EPA for high-volume sampling of ambient air. The method write-up presents the use of this device.

The sampling module (see Figure 2) consists of a filter and a glass sampling cartridge containing the PUF utilized to concentrate common pesticides and PCBs from the air. A field portable unit has been developed by EPA (see Figure 3).

11.2 Calibration of Sampling System

Each sampler should be calibrated (1) when new, (2) after major repairs or maintenance, (3) whenever any audit point deviates from the calibration curve by more than 7 percent, (4) before/after each sampling event, and (5) when a different sample collection media, other than that which the sampler was originally calibrated to, will be used for sampling.

11.2.1 Calibration of Orifice Transfer Standard. Calibrate the modified high volume air sampler in the field using a calibrated orifice flow rate transfer standard. Certify the orifice transfer standard in the laboratory against a positive displacement rootsmeter (see Figure 6). Once certified, the recertification is performed rather infrequently if the orifice is protected from damage. Recertify the orifice transfer standard performed once per year utilizing a set of five multiple resistance plates.

[Note: The set of five multihole resistance plates are used to change the flow through the orifice so that several points can be obtained for the orifice calibration curve. The following procedure outlines the steps to calibrate the orifice transfer standard in the laboratory.]

11.2.1.1 Record the room temperature (T_1 in °C) and barometric pressure (P_b in mm Hg) on the Orifice Calibration Data Sheet (see Figure 7). Calculate the room temperature in K (absolute temperature) and record on Orifice Calibration Data Sheet.

$$T_1 \text{ in K} = 273° + T_1 \text{ in } °C$$

11.2.1.2 Set up laboratory orifice calibration equipment as illustrated in Figure 6. Check the oil level of the rootsmeter prior to starting. There are 3 oil level indicators, 1 at the clear plastic end and 2 site glasses, 1 at each end of the measuring chamber.

11.2.1.3 Check for leaks by clamping both manometer lines, blocking the orifice with cellophane tape, turning on the high volume motor, and noting any change in the rootsmeter's reading. If the rootsmeter's reading changes, there is a leak in the system. Eliminate the leak before proceeding. If the rootsmeter's reading remains constant, turn off the hi-vol motor, remove the cellophane tape, and unclamp both manometer lines.

11.2.1.4 Install the 5-hole resistance plate between the orifice and the filter adapter.

11.2.1.5 Turn manometer tubing connectors 1 turn counter-clockwise. Make sure all connectors are open.

11.2.1.6 Adjust both manometer midpoints by sliding their movable scales until the zero point corresponds with the meniscus. Gently shake or tap to remove any air bubbles and/or liquid remaining on tubing connectors. (If additional liquid is required for the water manometer, remove tubing connector and add clean water.)

11.2.1.7 Turn on the high volume motor and let it run for 5 minutes to set the motor brushes. Turn the motor off. Insure manometers are set to zero. Turn the high volume motor on.

11.2.1.8 Record the time, in minutes, required to pass a known volume of air (approximately 200 to 300 ft^3 of air for each resistance plate) through the rootsmeter by using the rootsmeter's digital volume dial and a stopwatch.

11.2.1.9 Record both manometer readings-orifice water manometer ($\triangle H$) and rootsmeter mercury manometer ($\triangle P$) on Orifice Calibration Data Sheet (see Figure 7).

[Note: $\triangle H$ is the sum of the difference from zero (0) of the two column heights.]

11.2.1.10 Turn off the high volume motor.

11.2.1.11 Replace the 5-hole resistance plate with the 7-hole resistance plate.

11.2.1.12 Repeat Sections 11.2.1.3 through 11.2.1.11.

11.2.1.13 Repeat for each resistance plate. Note results on Orifice Calibration Data Sheet (see Figure 7). Only a minute is needed for warm-up of the motor. Be sure to tighten the orifice enough to eliminate any leaks. Also check the gaskets for cracks.

[Note: The placement of the orifice prior to the rootsmeter causes the pressure at the inlet of the rootsmeter to be reduced below atmospheric conditions, thus causing the measured volume to be incorrect. The volume measured by the rootsmeter must be corrected.]

11.2.1.14 Correct the measured volumes on the Orifice Calibration Data Sheet:

$$V_{std} = V_m \left(\frac{P_a - \triangle P}{P_{std}}\right)\left(\frac{T_{std}}{T_a}\right)$$

where:

V_{std} = standard volume, std m^3

V_m = actual volume measured by the rootsmeter, m^3

P_a = barometric pressure during calibration, mm Hg

$\triangle P$ = differential pressure at inlet to volume meter, mm Hg

P_{std} = 760 mm Hg

T_{std} = 273 + 25°C = 298 K

T_a = ambient temperature during calibration, K.

11.2.1.15 Record standard volume on Orifice Calibration Data Sheet.

11.2.1.16 The standard flow rate as measured by the rootsmeter can now be calculated using the following formula:

$$Q_{std} = \frac{V_{std}}{\theta}$$

where:

Q_{std} = standard volumetric flow rate, std m^3/min

θ = elapsed time, min

11.2.1.17 Record the standard flow rates to the nearest 0.01 std m^3/min.

11.2.1.18 Calculate and record $\sqrt{\triangle H\ (P_1/P_{std})(298/T_1)}$ value for each standard flow rate.

11.2.1.19 Plot each $\sqrt{\triangle H\ (P_1/P_{std})(298/T_1)}$ value (y-axis) versus its associated standard flow rate (x-axis) on arithmetic graph paper and draw a line of best fit between the individual plotted points.

[Note: This graph will be used in the field to determine standard flow rate.]

11.2.2 Calibration of the High Volume Sampling System Utilizing Calibrated Orifice Transfer Standard

For this calibration procedure, the following conditions are assumed in the field:

- The sampler is equipped with a valve to control sample flow rate.
- The sample flow rate is determined by measuring the orifice pressure differential, using a Magnehelic gauge.
- The sampler is designed to operate at a standardized volumetric flow rate of 8 ft^3/min (0.225 m^3/min), with an acceptable flow rate range within 10 percent of this value.
- The transfer standard for the flow rate calibration is an orifice device. The flow rate through the orifice is determined by the pressure drop caused by the orifice and is measured using a "U" tube water manometer or equivalent.
- The sampler and the orifice transfer standard are calibrated to standard volumetric flow rate units (scfm or scmm).
- An orifice transfer standard with calibration traceable to NIST is used.
- A "U" tube water manometer or equivalent, with a 0- to 16-inch range and a maximum scale division of 0.1 inch, will be used to measure the pressure in the orifice transfer standard.
- A Magnehelic gauge or equivalent, with a 9- to 100-inch range and a minimum scale division of 2 inches for measurements of the differential pressure across the sampler's orifice is used.
- A thermometer capable of measuring temperature over the range of 32° to 122°F (0° to 50°C) to ±2°F (±1°C) and referenced annually to a calibrated mercury thermometer is used.
- A portable aneroid barometer (or equivalent) capable of measuring ambient barometric pressure between 500 and 800 mm Hg (19.5 and 31.5 in. Hg) to the nearest mm Hg and referenced annually to a barometer of known accuracy is used.
- Miscellaneous handtools, calibration data sheets or station log book, and wide duct tape are available.

11.2.2.1 Set up the calibration system as illustrated in Figure 8. Monitor the airflow through the sampling system with a venturi/Magnehelic assembly, as illustrated in Figure 8. Audit the field sampling system once per quarter using a flow rate transfer standard, as described in the EPA *High Volume-Sampling Method, 40 CVR 50, Appendix B.* Perform a single-point calibration before and after each sample collection, using the procedures described in Section 11.2.3.

11.2.2.2 Prior to initial multi-point calibration, place an empty glass cartridge in the sampling head and activate the sampling motor. Fully open the flow control valve and adjust the voltage variator so that a sample flow rate corresponding to 110 percent of the desired flow rate (typically 0.20 to 0.28 m^3/min) is indicated on the Magnehelic gauge (based on the previously obtained multipoint calibration curve). Allow the motor to warm up for 10 minutes and then adjust the flow control valve to achieve the desire flow rate. Turn off the sampler. Record the ambient temperature and barometric pressure on the Field Calibration Data Sheet (see Figure 9).

11.2.2.3 Place the orifice transfer standard on the sampling head and attach a manometer to the tap on the transfer standard, as illustrated in Figure 8. Properly align the retaining rings with the filter holder and secure

by tightening the three screw clamps. Connect the orifice transfer standard by way of the pressure tap to a manometer using a length of tubing. Set the zero level of the manometer or Magnehelic. Attach the Magnehelic gauge to the sampler venturi quick release connections. Adjust the zero (if needed) using the zero adjust screw on face of the gauge.

11.2.2.4 To leak test, block the orifice with a rubber stopper, wide duct tape, or other suitable means. Seal the pressure port with a rubber cap or similar device. Turn on the sampler.

Caution: *Avoid running the sampler for too long a time with the orifice blocked. This precaution will reduce the chance that the motor will be overheated due to the lack of cooling air. Such overheating can shorten the life of the motor*.

11.2.2.5 Gently rock the orifice transfer standard and listen for a whistling sound that would indicate a leak in the system. A leak-free system will not produce an upscale response on the sampler's Magnehelic. Leaks are usually caused either by damaged or missing gaskets by cross-threading and/or not screwing sample cartridge together tightly. All leaks must be eliminated before proceeding with the calibration. When the sample is determined to be leak-free, turn off the sampler and unblock the orifice. Now remove the rubber stopper or plug from the calibrator orifice.

11.2.2.6 Turn the flow control valve to the fully open position and turn the sampler on. Adjust the flow control valve until a Magnehelic reading of approximately 70 in. is obtained. Allow the Magnehelic and manometer readings to stabilize and record these values on the orifice transfer Field Calibration Data Sheet (see Figure 9).

11.2.2.7 Record the manometer reading under Y1 and the Magnehelic reading under Y2 on the Field Calibration Data Sheet. For the first reading, the Magnehelic should still be at 70 inches as set above.

11.2.2.8 Set the Magnehelic to 60 inches by using the sampler's flow control valve. Record the manometer (Y1) and Magnehelic (Y2) readings on the Field Calibration Data Sheet (see Figure 9).

11.2.2.9 Repeat the above steps using Magnehelic settings of 50, 40, 30, 20, and 10 inches.

11.2.2.10 Turn the voltage variator to maximum power, open the flow control valve, and confirm that the Magnehelic reads at least 100 inches. Turn off the sampler and confirm that the Magnehelic reads zero.

11.2.2.11 Read and record the following parameters on the Field Calibration Data Sheet. Record the following on the calibration data sheet:

Data, job number, and operator's signature;

- Sampler serial number;
- Ambient barometric pressure; and
- Ambient temperature.

11.2.2.12 Remove the "dummy" cartridge and replace with a sample cartridge.

11.2.2.13 Obtain the Manufacturer High Volume Orifice Calibration Certificate.

11.2.2.14 If not performed by the manufacturer, calculate values for each calibrator orifice static pressure (Column 6, inches of water) on the manufacturer's calibration certificate using the following equation:

$$\sqrt{\triangle H(P_a/760)(298/[T_a + 273])}$$

where:

P_a = the barometric pressure (mm Hg) at time of manufacturer calibration, mm Hg

T_a = temperature at time of calibration, °C

11.2.2.15 Perform a linear regression analysis using the values in Column 7 of the manufacturer High Volume Orifice Calibration Certificate for flow rate (Q_{std}) as the "X" values and the calculated values as the Y

values. From this relationship, determine the correlation (CC1), intercept (B1), and slope (M1) for the Orifice Transfer Standard.

11.2.2.16 Record these values on the Field Calibration Data Sheet (see Figure 9).

11.2.2.17 Using the Field Calibration Data Sheet values (see Figure 9), calculate the Orifice Manometer Calculated Values (Y3) for each orifice manometer reading using the following equation:

Y3 Calculation

$$Y3 = [Y1(P_a/760)(298/\{T_a + 273\})]^{½}$$

11.2.2.18 Record the values obtained in Column Y3 on the Field Calibration Data Sheet (see Figure 9).

11.2.2.19 Calculate the Sampler Magnehelic Calculate Values (Y4) using the following equation:

Y4 Calculation

$$Y4 = [Y2(P_a/760)(298/\{T_a + 273\})]^{½}$$

11.2.2.20 Record the value obtained in Column Y4 on the Field Calibration Data Sheet (see Figure 9).

11.2.2.21 Calculate the Orifice Flow Rate (X1) in scm, using the following equation:

X1 Calculation

$$X1 = \frac{Y3 - B1}{M1}$$

11.2.2.22 Record the values obtained in Column X1, on the Field Calibration Data Sheet (see Figure 9).

11.2.2.23 Perform a linear regression of the values in Column X1 (as X) and the values in Column Y4 (as Y). Record the relationship for correlation (CC2), intercept (B2), and slope (M2) on the Field Calibration Data Sheet.

11.2.2.24 Using the following equation, calculate a set point (SP) for the manometer to represent a desired flow rate:

$$\text{Set point (SP)} = [(\text{Expected } P_a)/(\text{Expected } T_a)(T_{std}/P_{std})][M2\ (\text{Desired flow rate}) + B2]^2$$

where:

P_a = Expected atmospheric pressure (P_a), mm Hg
T_a = Expected atmospheric temperature (T_a), °C
M2 = Slope of developed relationship
B2 = Intercept of developed relationship
T_{std} = Temperature standard, 25°C
P_{std} = Pressure standard, 760 mm Hg

11.2.2.25 During monitoring, calculate a flow rate from the observed Magnehelic reading using the following equations:

$$Y5 = [\text{Average Magnehelic Reading } (\Delta H)\ (P_a/T_a)(T_{std}/P_{std})]^{1/2}$$

$$X2 = \frac{Y5 - B2}{M2}$$

where:

Y5 = Corrected Magnehelic reading
X2 = Instant calculated flow rate, scm

11.2.2.26 The relationship in calibration of a sampling system between Orifice Transfer Standard and flow rate through the sampler is illustrated in Figure 10.

11.2.3 Single-Point Audit of the High Volume Sampling System Utilizing Calibrated Orifice Transfer Standard

Single point calibration checks are required as follows:

- Prior to the start of each 24-hour test period.
- After each 24-hour test period. The post-test calibration check may serve as the pre-test calibration check for the next sampling period if the sampler is not moved.
- Prior to sampling after a sample is moved.

For samplers, perform a calibration check for the operational flow rate before each 24-hour sampling event and when required as outlined in the user quality assurance program. The purpose of this check is to track the sampler's calibration stability. Maintain a control chart presenting the percentage difference between a sampler's indicated and measured flow rates. This chart provides a quick reference of sampler flow-rate drift problems and is useful for tracking the performance of the sampler. Either the sampler log book or a data sheet will be used to document flowcheck information. This information includes, but is not limited to, sampler and orifice transfer standard serial number, ambient temperature, pressure conditions, and collected flow-check data.

In this subsection, the following is assumed:

- The flow rate through a sampler is indicated by the orifice differential pressure;
- Samplers are designed to operate at an actual flow rate of 8 scfm, with a maximum acceptable flow-rate fluctuation range of ±10 percent of this value;
- The transfer standard will be an orifice device equipped with a pressure tap. The pressure is measured using a manometer; and
- The orifice transfer standard's calibration relationship is in terms of standard volumetric flow rate (Q_{std}).

11.2.3.1 Perform a single point flow audit check before and after each sampling period utilizing the Calibrated Orifice Transfer Standard (see Section 11.2.1).

11.2.3.2 Prior to single point audit, place a "dummy" glass cartridge in the sampling head and activate the sampling motor. Fully open the flow control valve and adjust the voltage variator so that a sample flow rate corresponding to 110 percent of the desired flow rate (typically 0.19 to 0.28 m^3/min) is indicated on the Magnehelic gauge (based on the previously obtained multipoint calibration curve). Allow the motor to warm up for 10 minutes and then adjust the flow control valve to achieve the desired flow rate. Turn off the sampler. Record the ambient temperature and barometric pressure on the Field Test Data Sheet (see Figure 11).

11.2.3.3 Place the flow rate transfer standard on the sampling head.

11.2.3.4 Properly align the retaining rings with the filter holder and secure by tightening the 3 screw clamps. Connect the flow rate transfer standard to the manometer using a length of tubing.

11.2.3.5 Using tubing, attach 1 manometer connector to the pressure tap of the transfer standard. Leave the other connector open to the atmosphere.

11.2.3.6 Adjust the manometer midpoint by sliding the movable scale until the zero point corresponds with the water meniscus. Gently shake or tap to remove any air bubbles and/or liquid remaining on tubing connectors. (If additional liquid is required, remove tubing connector and add clean water.)

11.2.3.7 Turn on high-volume motor and let run for 5 minutes.

11.2.3.8 Record the pressure differential indicated, ΔH, in inches of water, on the Field Test Data Sheet. Be sure stable ΔH has been established.

11.2.3.9 Record the observed Magnahelic gauge reading, in inches of water, on the Field Test Data Sheet. Be sure stable ΔM has been established.

11.2.3.10 Using previous established Orifice Transfer Standard curve, calculate Q_{xs} (see Section 11.2.2.23).

11.2.3.11 This flow should be within ±10 percent of the sampler set point, normally, 8 ft^3. If not, perform a new multipoint calibration of the sampler.

11.2.3.12 Remove flow rate transfer standard and dummy adsorbent cartridge.

11.3 Sample Collection

11.3.1 General Requirements

11.3.1.1 The sampler should be located in an unobstructed area, at least 2 meters from any obstacle to air flow. The exhaust hose should be stretched out in the downwind direction to prevent recycling of air into the sample head.

11.3.1.2 All cleaning and sample module loading and unloading should be conducted in a controlled environment, to minimize any chance of potential contamination.

11.3.1.3 When new or when using the sampler at a different location, all sample contact areas need to be cleared. Use triple rinses of reagent grade hexane contained in Teflon® rinse bottles. Allow the solvent to evaporate before loading the PUF modules.

11.3.2 Preparing Cartridge for Sampling

11.3.2.1 Detach the lower chamber of the cleaned sample head. While wearing disposable, clean, lint-free nylon, or powder-free surgical gloves, remove a clean glass adsorbent module from its shipping container. Remove the Teflon® end caps. Replace the end caps in the sample container to be reused after the sample has been collected.

11.3.2.2 Insert the glass module into the lower chamber and tightly reattach the lower chambers to the module.

11.3.2.3 Using clean rinsed (with hexane) Teflon-tipped forceps, carefully place a clean conditioned fiber filter atop the filter holder and secure in place by clamping the filter holder ring over the filter. Place the aluminum protective cover on top of the cartridge head. Tighten the 3 screw clamps. Ensure that all module connections are tightly assembled. Place a small piece of aluminum foil on the ball-joint of the sample cartridge to protect from back-diffusion of semi-volatile into the cartridge during transporting to the site.

[Note: Failure to do so could result in air flow leaks at poorly sealed locations which could affect sample representativeness.]

11.3.2.4 Place in a carrying bag to take to the sampler.

11.3.3 Collection

11.3.3.1 After the sampling system has been assembled, perform a single point flow check as described in Sections 11.2.3.

11.3.3.2 With the empty sample module removed from the sampler, rinse all sample contact areas using reagent grade hexane in a Teflon® squeeze bottle. Allow the hexane to evaporate from the module before loading the samples.

11.3.3.3 With the sample cartridge removed from the sampler and the flow control valve fully open, turn the pump on and allow it to warm-up for approximately 5 minutes.

11.3.3.4 Attach a "dummy" sampling cartridge loaded with the exact same type of filter and PUF media to be used for sample collection.

11.3.3.5 Turn the sampler on and adjust the flow control valve to the desired flow as indicated by the Magnehelic gauge reading determined in Section 11.2.2.24. Once the flow is properly adjusted, take extreme care not to inadvertently alter its setting.

11.3.3.6 Turn the sampler off and remove the "dummy" module. The sampler is now ready for field use.

11.3.3.7 Check the zero reading of the sampler Magnehelic. Record the ambient temperature, barometric pressure, elapsed time meter setting, sampler serial number, filter number, and PUF cartridge number on the Field Test Data Sheet (see Figure 11). Attach the loaded sampler cartridge to the sampler.

11.3.3.8 Place the voltage variator and flow control valve at the settings used in Section 11.3.2, and the power switch. Activate the elapsed time meter and record the start time. Adjust the flow (Magnehelic setting), if necessary, using the flow control valve.

11.3.3.9 Record the Magnehelic reading every 6 hours during the sampling period. Use the calibration factors (see Section 11.2.2.24) to calculate the desired flow rate. Record the ambient temperature, barometric pressure, and Magnehelic reading at the beginning and during sampling period.

11.3.4 Sample Recovery

11.3.4.1 At the end of the desired sampling period, turn the power off. Carefully remove the sampling head containing the filter and adsorbent cartridge. Place the protective "plate" over the filter to protect cartridge during transport to clean recovery area. Also, place a piece of aluminum foil around the bottom of adsorbent sampler head.

11.3.4.2 Perform a final calculated sampler flow check using the calibration orifice, as described in Section 11.3.2. If calibration deviates by more than 10 percent from initial reading, mark the flow data for that sample as suspect and inspect and/or remove from service, record results on Field Test Data Sheet, Figure 11.

11.3.4.3 Transport adsorbent sampler head to a clean recovery area.

11.3.4.4 While wearing disposable lint free nylon or powder-free surgical gloves, remove the PUF cartridge from the lower module chamber and lay it on the retained aluminum foil in which the sample was originally wrapped.

11.3.4.5 Carefully remove the glass fiber filter from the upper chamber using clean Teflon®-tipped forceps.

11.3.4.6 Fold the filter in half twice (sample side inward) and place it in the glass cartridge atop the PUF.

11.3.4.7 Wrap the combined samples in the original hexane rinsed aluminum foil, attached Teflon® end caps and place them in their *original* aluminum sample container. Complete a sample label and affix it to the aluminum shipping container.

11.3.4.8 Chain-of-custody should be maintained for all samples. Store the containers under dry ice and protect from UV light to prevent possibly photo-decomposition of collected analytes. If the time span between sample collection and laboratory analysis is to exceed 24 hours, refrigerate sample at 4°C.

11.3.4.9 Return at least 1 field filter/PUF blank to the laboratory with each group of samples. Treat a field blank exactly as the sample except that no air is drawn through the filter/adsorbent cartridge assembly.

11.3.4.10 Ship and store field samples chilled (<4°) (blue ice is acceptable) until receipt at the analytical laboratory, after which they should be refrigerated at less than or equal to 4°C. Extraction must be performed within 7 days of sampling and analysis within 40 days of extraction.

12. Sample Extraction Procedure

[Note: Sample extraction should be performed under a properly ventilated hood.]

12.1 Sample Extraction

12.1.1 All samples should be extracted within 1 week after collection. All samples should be stored at <4°C until extracted.

12.1.2 All glassware should be washed with a suitable detergent; rinsed with deionized water, acetone, and hexane; rinsed again with deionized water; and fired in an oven (500°C).

12.1.3 Prepare a spiking solution for determination of extraction efficiency. The spiking solution should contain one or more surrogate compounds that have chemical structures and properties similar to those of the analytes of interest. Octachloronaphthalene (OCN) and dibutylchlorendate have been used as surrogates for determination of organochlorine pesticides by GC with an ECD. Tetrachloro-m-xylene and decachlorobiphenyl can also be used together to insure recovery of early and late eluting compounds. For organophosphate pesticides, tributylphosphate or triphenylphosphate may be employed as surrogates. The surrogate solution should be prepared so that addition of 100 μL into the PUF plug results in an extract containing the surrogate compound at the high end of the instrument's calibration range. As an example, the spiking solution for OCN is prepared by dissolving 10 mg of OCN in 10 mL of 10% acetone in n-hexane, followed by serial dilution n-hexane to achieve a final spiking solution of OCN is 1 μg/mL.

[Note: Use the recoveries of the surrogate compounds to monitor for unusual matrix effects and gross sample processing errors. Evaluate surrogate recovery for acceptance by determining whether the measured concentration falls within the acceptance limits of 60-120 percent.]

12.1.4 The extracting solution (10% diethyl ether/hexane) is prepared by mixing 1800 mL of freshly opened hexane and 200 mL of freshly opened diethyl ether (preserved with ethanol) to a flask.

12.1.5 All clean glassware, forceps, and other equipment to be used should be rinsed with 10% diethyl ether/hexane and placed on rinsed (10% diethyl ether/hexane) aluminum foil until use. The condensing towers should also be rinsed with 10% diethyl ether/hexane. Then add 700 mL of 10% diethyl ether/hexane to the 1,000 mL round bottom flask and add up to three boiling granules.

12.1.6 Using precleaned (i.e., 10% diethyl ether/hexane Soxhlet extracted) cotton gloves, the filter/PUF cartridge is removed from the sealed container, the PUF removed from the glass cartridge, and the filter/PUF together are placed into the 300 mL Soxhlet extractor using prerinsed forceps.

12.1.7 Before extraction begins, add 100 µL of the OCN solution directly to the top of the PUF plug.

[Note: Incorporating a known concentration of the solution onto the sample provides a quality assurance check to determine recovery efficiency of the extraction and analytical processes.]

12.1.8 Connect the Soxhlet extractor to the 1,000 mL boiling flask and condenser. Wet the glass joints with 10% diethyl ether/hexane to ensure a tight seal between the fittings. If necessary, the PUF plug can be adjusted

using forceps to wedge it midway along the length of the siphon. The above procedure should be followed for all samples, with the inclusion of a blank control sample.

12.1.9 The water flow to the condenser towers of the Soxhlet extraction assembly should be checked and the heating unit turned on. As the samples boil, the Soxhlet extractors should be inspected to ensure that they are filling and siphoning properly (4 to 6 cycles/hour). Samples should cycle for a minimum of 16 hours.

12.1.10 At the end of the extracting process (minimum of 16 hours), the heating unit is turned off and the sample cooled to room temperature.

12.1.11 The extracts are then concentrated to 5 mL using a Kuderna-Danish (K-D) apparatus. The K-D is set up, assembled with concentrator tubes, and rinsed. The lower end of the filter tube is packed with glass wool and filled with sodium sulfate to a depth of 40 mm. The filter tube is then placed in the neck of the K-D. The Soxhlet extractors and boiling flasks are carefully removed from the condenser towers and the remaining solvent is drained into each boiling flask. Sample extract is carefully poured through the filter tube into the K-D. Each boiling flask is rinsed three times by swirling hexane along the sides. Once the sample has drained, the filter tube is rinsed down with hexane. Each Snyder column is attached to the K-D and rinsed to wet the joint for a tight seal. The complete K-D apparatus is placed on a steam bath and the sample is evaporated to approximately 5 mL.

[Note: Do not allow samples to evaporate to dryness.]

Remove sample from the steam bath, rinse the Snyder column with a minimum of hexane, and allow to cool. Adjust sample volume to 10 mL in a concentrator tube, close with a glass stopper, and seal with TFE fluorocarbon tape. Alternatively, the sample may be quantitatively transferred (with concentrator tube rinsing) to prescored vials and brought up to final volume. Concentrated extracts are stored at <4°C until analyzed. Analysis should occur no later than 40 days after sample extraction.

12.2 Sample Cleanup

12.2.1 If only polar compounds are sought, an alumina cleanup procedure is appropriate. Before cleanup, the sample extract is carefully reduced to 1 mL using a gentle stream of clean nitrogen.

12.2.2 A glass chromatographic column (2-mm I.D. x 15-cm long) is packed with alumina (7), activity grade IV, and rinsed with approximately 20 mL of n-hexane. The concentrated sample extract is placed on the column and eluted with 10 mL of n-hexane at a rate of 0.5 mL/minute. The eluate volume is adjusted to exactly 10 mL and analyzed as per Section 13.

12.2.3 If both PCBs and common pesticides are sought, alternate cleanup procedures (8,9) may be required (i.e., silicic acid).

12.2.4 Finally, class separation and improved specificity can be achieved by column clean-up and separation on Florisil (9).

13. Analytical Procedure

13.1 Analysis of Organochlorine Pesticides by Capillary Gas Chromatography with Electron Capture Detector (GC/ECD)

[Note: Organochlorine pesticides, PCBs and many nonchlorinated pesticides are responsive to electron capture detection (see Table 1). Most of these compounds can be analyzed at concentration of 1 to 50 ng/mL by GC/ECD. The following procedure is appropriate. Sampling and analytical methods that have been used to determine pesticides and PCBs collected from air using a modification of this methodology have been published (14-22).]

13.1.1 Select GC column (e.g., 0.3-mm by 30-m DB-5 column) and appropriate GC conditions to separate the target analytes. Typical operating parameters for this column with splitless injection are: Carrier gas-chromatography grade helium at a flow rate of 1 to 2 mL/min and a column head pressure of 7 to 9 psi (48 to 60 kPa); injector temperature of 250°C; detector temperature of 350°C; initial oven temperature of 50°C held for 2.0 min., ramped at 15°C/min to 150°C for 8 min, ramped at 10°C/min to 295°C then held for 5 min; purge time of 1.0 min. A typical injection volume is 2 to 3 μL.

13.1.2 Remove sample extract from refrigerator and allow to warm to room temperature.

13.1.3 Prepare standard solution from reference materials of known purity. Analytically pure standards of organochlorine pesticides and PCBs are available from several commercial sources.

13.1.4 Use the standard solutions of the various compounds of interest to determine relative retention times (RRTs) to an internal standard such as p,p'-DDE, aldrin or octachloronaphthalene. Use 1 to 3-μL injections or other appropriate volumes.

13.1.5 Determine detector linearity by injecting standard solutions of three different concentrations (amounts) that bracket the range of analyses. The calibration is considered linear if the relative standard deviation (RSD) of the three response factors for the three standards is 20 percent or less.

13.1.6 Calibrate the system with a minimum of three levels of calibration standards in the linear range. The low standard should be near the analytical method detection limit. The calibration is considered linear if the relative standard deviation (RSD) of the three response factors for the three standards is 20 percent or less. The initial calibration should be verified by the analysis of a standard from an independent source. Recovery of 85 to 115 percent is acceptable. The initial calibration curve should be verified at the begining of each day and after every ten samples by the analysis of the midpoint standard; an RPD of 15% or less is acceptable for continuing use of the initial calibration curve.

13.1.7 Inject 1 to 3 μL of sample extract. Record volume injected to the nearest 0.05 μL.

13.1.8 A typical ECD response for a mixture of single component pesticides using a capillary column is illustrated in Figure 12. If the response (peak height or area) exceeds the calibration range, dilute the extract and reanalyze.

13.1.9 Quantify PCB mixtures by comparison of the total heights or areas of GC peaks (minimum of five) with the corresponding peaks in the best-matching standard. Use Aroclor 1242 for early-eluting PCBs and either Aroclor 1254 or Aroclor 1260 as appropriate for late-eluting PCBs.

13.1.10 If both PCBs and organochlorine pesticides are present in the same sample, use column chromatographic separation on silicic acid (8,9) prior to GC analysis.

13.1.11 If polar compounds are present that interfere with GC/ECD analysis, use column chromatographic cleanup or alumina (7), activity grade IV, in accordance with Section 12.2.

13.1.12 For confirmation use a second GC column such as DB-608. All GC procedures except GC/MS require second column confirmation.

13.1.13 For improved resolution use a capillary column such as an 0.25-mm I.D. x 30-m DB-5 with 0.25 μm film thickness. The following conditions are appropriate.

- Helium carrier gas at 1 mL/min.
- Column temperature program, 90°C (4 min)/16°C/min to 154°C/4°C/min to 270°C.
- Detector, ^{63}Ni ECD at 350°C.
- Make up gas, nitrogen, or 5% methane/95% argon at 60 mL/min.
- Splitless injection, 2 μL maximum.
- Injector temperature, 220°C.

13.1.14 Class separation and improved specificity can be achieved by column chromatographic separation on Florisil (9).

13.1.15 A Hall electrolytic conductivity detector (HECD) operated in the reductive mode may be substituted for the ECD for improved specificity. Sensitivity, however, will be reduced by at least an order of magnitude.

13.2 Analysis of Organophosphorus Pesticides by Capillary Gas Chromatography with Flame Photometric or Nitrogen-Phosphorus Detectors (GC/FPD/NPD)

[Note: Organophosphorus pesticides are responsive to flame photometric and nitrogen-phosphorus (alkali flame ionization) detection. Most of these compounds can be analyzed at concentrations of 50 to 500 ng/mL using either of these detectors.]

13.2.1 Procedures given in Section 13.1.1 through 13.1.9 and Section 13.1.13 through 13.1.14 apply, except for the selection of surrogates.

13.2.2 Use tributylphosphate, triphenylphosphate, or other suitable compound(s) as surrogates to verify extraction efficiency and to determine RRTs.

13.3 Analysis of Carbamate and Urea Pesticides by Capillary Gas Chromatography with Nitrogen-Phosphorus Detector

13.3.1 Trazine, carbamate, and urea pesticides may be determined by capillary GC (DB-5, DB-17, or DB-1701 stationary phase) using nitrogen-phosphorus detection or MS-SIM with detection limits in the 0.05 to 0.2 μL/mL range. Procedures given in Section 13.1.1 through 13.1.9 and Section 13.1.13 through 13.1.14 apply, except for the selection of surrogates, detector, and make up gas.

13.3.2 Thermal degradation may be minimized by reducing the injector temperature to 200°C. HPLC may also be used, but detection limits will be higher (1 to 5 μg/mL).

13.3.3 N-methyl carbamates may be determined using reverse-phase high performance liquid chromatography (HPLC) (C-18) (Section 13.4) and post-column derivization with o-phthaldehyde and fluorescence detection (EPA Method 531). Detection limits of 0.01 to 0.1 μg/mL can be achieved.

13.4 Analysis of Carbamate, Urea, Pyrethroid, and Phenolic Pesticides by High Performance Liquid Chromatography (HPLC)

[Note: Many carbamate pesticides, urea pesticides, pyrethrins, phenols, and other polar pesticides may be analyzed by high HPLC with fixed or variable wavelength UV detection. Either reversed-phase or normal phase chromatography may be used. Detection limits are 0.2 to 10 μg/mL of extract.]

13.4.1 Select HPLC column (i.e., Zorbax-SIL, 46-mm I.D. x 25-cm, or μ-Bondapak C18, 3.9-mm x 30-cm, or equivalent).

13.4.2 Select solvent system (i.e., mixtures of methanol or acetonitrile with water or mixtures of heptane or hexane with isopropanol).

13.4.3 Follow analytical procedures given in Sections 13.1.2 through 13.1.9.

13.4.4 If interferences are present, adjust the HPLC solvent system composition or use column chromatographic clean-up with silica gel, alumina, or Florisil (9).

13.4.5 An electrochemical detector may be used to improve sensitivity for some ureas, carbonates, and phenolics. Much more care is required in using this detector, particularly in removing dissolved oxygen from the mobile phase and sample extracts.

13.4.6 Chlorophenol (di- through penta-) may be analyzed by GC/ECD or GC/MS after derivatization with pentafluorobenzylbromide (EPA Method 604).

13.4.7 Chlorinated phenoxyacetic acid herbicides and pentachlorophenol can be analyzed by GC/ECD or GC/MS after derivatization with diazomethane (EPA Method 515). DB-5 and DBJ-1701 columns (0.25-mm I.D. x 30-m) at 60 to 300°C/4°C per min have been found to perform well.

13.5 Analysis of Pesticides and PCBs by Gas Chromatography with Mass Spectrometry Detection (GC/MS)

[Note: A mass spectrometer operating in the selected ion monitoring mode is useful for confirmation and identification of pesticides.]

13.5.1 A mass spectrometer operating in select ion monitoring (SIM) mode can be used as a sensitive detector for multi-residue determination of a wide variety of pesticides. Mass spectrometers are now available that provide detection limits comparable to nitrogen-phosphorus and electron capture detectors.

13.5.2 Most of the pesticides shown in Table 1 have been successfully determined by GC/MS-SIM. Typical GC operating parameters are as described in Section 13.1.1.

13.5.3 The mass spectrometer is typically operated using positive ion electron impact ionization (70 eV). Other instrumental parameters are instrument specific.

13.5.4 p-Terphenyl-d_{14} is commonly used as a surrogate for GC/MS analysis.

13.5.5 Quantification is typically performed using an internal standard method. 1,4-Dichlorobenzene, naphthalene-d_8, acenaphthene-d_{10}, phenanthrene-d_{10}, chrysene-d_{12} and perylene-d_{12} are commonly used as internal standards. Procedures given in Section 13.1.1 through 13.1.9 and Section 13.1.13 through 13.1.14 apply, except for the selection of surrogates, detector, and make up gas.

13.5.6 See ASTM Practice D 3687 for injection technique, determination of relative retention times, and other procedures pertinent to GC and HPLC analyses.

13.6 Sample Concentration

13.6.1 If concentrations are too low to detect by the analytical procedure of choice, the extract may be concentrated to 1 mL or 0.5 mL by carefully controlled evaporation under an inert atmosphere. The following procedure is appropriate.

13.6.2 Place K-D concentrator tube in a water bath and analytical evaporator (nitrogen blow-down) apparatus. The water bath temperature should be from 25°C to 50°C.

13.6.3 Adjust nitrogen flow through hypodermic needle to provide a gentle stream.

13.6.4 Carefully lower hypodermic needle into the concentrator tube to a distance of about 1 cm above the liquid level.

13.6.5 Continue to adjust needle placement as liquid level decreases.

13.6.6 Reduce volume to slightly below desired level.

13.6.7 Adjust to final volume by carefully rinsing needle tip and concentrator tube well with solvent (usually n-hexane).

14. Calculations

14.1 Determination of Concentration

14.1.1 The concentration of the analyte in the extract solution can be taken from a standard curve where peak height or area is plotted linearly against concentration in nanograms per milliliter (ng/mL). If the detector response is known to be linear, a single point is used as a calculation constant.

14.1.2 From the standard curve, determine the nanograms of analyte standard equivalent to the peak height or area for a particular compound.

14.1.3 Ascertain whether the field blank is contaminated. Blank levels should not exceed 10 ng/sample for organochlorine pesticides or 100 ng/sample for PCBs and other pesticides. If the blank has been contaminated, the sampling series must be held suspect.

14.2 Equations

14.2.1 Quantity of the compound in the sample (A) is calculated using the following equation:

$$A = 1000 \left(\frac{A_s \times V_e}{V_i} \right)$$

where:

A = total amount of analyte in the sample, ng.

A_s = calculated amount of material injected onto the chromatograph based on calibration curve for injected standards, ng.

V_e = final volume of extract, mL.

V_i = volume of extract injected, μL.

1000 = factor for converting microliters to milliliters.

14.2.2 The extraction efficiency (EE) is determined from the recovery of surrogate spike as follows:

$$EE(\%) = \left[\frac{S}{S_a}\right][100]$$

where:

EE = extraction efficiency, %

S = amount of spike recovered, ng.

S_a = amount of spike added to plug, ng.

The extraction efficiency (surrogate recovery) must fall between 60-120% to be acceptable.

14.2.3 The total volume of air sampled under ambient conditions is determined using the following equation:

$$V_a = \frac{\sum_{i=1}^{n} (T_i \times F_i)}{1000 \text{ L/m}^3}$$

where:

V_a = total volume of air sampled, m^3.

T_i = length of sampling segment between flow checks, min.

F_i = average flow during sampling segment, L/min.

14.2.4 The air volume is corrected to EPA standard temperature (25°C) and standard pressure (760 mm Hg) as follows:

$$V_s = V_a \left(\frac{P_b - P_w}{760 \text{ mm Hg}}\right)\left(\frac{298K}{t_A}\right)$$

where:

V_s = volume of air at standard conditions (25°C and 760 mm Hg), std. m^3.

V_a = total volume of air sampled, m^3.

P_b = average ambient barometric pressure, mm Hg.

P_w = vapor pressure of water at calibration temperature, mm Hg.

t_A = average ambient temperature, °C + 273.

14.2.5 If the proper criteria for a sample have been met, concentration of the compound in a standard cubic meter of air sampled is calculated as follows:

$$C_a(\text{ng/std. m}^3) = \left[\frac{(A)}{(V_s)}\right]$$

If it is desired to convert the air concentration value to parts per trillion (ppt) in dry air at standard temperature and pressure (STP), the following conversion is used:

$$ppt = 0.844\ (C_a)$$

The air concentration can be converted to parts per trillion (v/v) in air at STP as follows:

$$pptv = \left[\frac{(24.45)\ (C_a)}{(MW)}\right]$$

where:

MW = molecular weight of the compound of interest, g/g-mole.

14.2.6 If quantification is performed using an internal standard, a relative response factor (RRF) is calculated by the equation:

$$RRF = \left[\frac{(I_s)(C_{is})}{(I_{is})(C_s)}\right]$$

where:

I_s = integrated area of the target analyte peak, counts.

I_{is} = integrated area of the internal standard peak, counts.

C_{is} = concentration of the internal standard, ng/μL.

C_s = concentration of the analyte, ng/µL.

14.2.7 The concentration of the analyte (C_a) in the sample is then calculated as follows:

$$C_a = \frac{(I_s)(C_{is})}{(RRF)(I_{is})}$$

where:

I_s = integrated area of the target analyte peak, counts.

RRF = relative response factor (see Section 14.2.7).

15. Performance Criteria and Quality Assurance

[Note: This section summarizes required quality assurance (QA) measures and provides guidance concerning performance criteria that should be achieved within each laboratory.]

15.1 Standard Operating Procedures (SOPs)

15.1.1 Users should generate SOPs describing the following activities accomplished in their laboratory: (1) assembly, calibration, and operation of the sampling system, with make and model of equipment used; (2) preparation, purification, storage, and handling of sampling cartridges, (3) assembly, calibration, and operation of the analytical system, with make and model of equipment used; and (4) all aspects of data recording and processing, including lists of computer hardware and software used.

15.1.2 SOPs should provide specific stepwise instructions and should be readily available to, and understood by, the laboratory personnel conducting the work.

15.2 Process, Field, and Solvent Blanks

15.2.1 One filter/PUF cartridge from each batch of approximately twenty should be analyzed, without shipment to the field, for the compounds of interest to serve as a process blank.

15.2.2 During each sampling episode, at least one filter/PUF cartridge should be shipped to the field and returned, without drawing air through the sampler, to serve as a field blank.

15.2.3 Before each sampling episode, one PUF plug from each batch of approximately twenty should be spiked with a known amount of the standard solution. The spiked plug will remain in a sealed container and will not be used during the sampling period. The spiked plug is extracted and analyzed with the other samples. This field spike acts as a quality assurance check to determine matrix spike recoveries and to indicate sample degradation.

15.2.4 During the analysis of each batch of samples, at least one solvent process blank (all steps conducted but no filter/PUF cartridge included) should be carried through the procedure and analyzed.

15.2.5 Levels for process, field and solvent blanks should not exceed 10 ng/sample for single components or 100 ng/sample for multiple component mixtures (i.e., for organochlorine pesticides and PCBs).

15.3 Method Precision and Bias

15.3.1 Precision and bias in this type of analytical procedure are dependent upon the precision and bias of the analytical procedure for each compound of concern, and the precision and bias of the sampling process.

15.3.2 Several different parameters involved in both the sampling and analysis steps of this method collectively determine the precision and bias with which each compound is detected. As the volume of air sampled is increased, the sensitivity of detection increases proportionately within limits set by: (a) the retention efficiency for each specific component trapped on the polyurethane foam plug, and (b) the background interference associated with the analysis of each specific component at a given site sampled. The sensitivity of detection of samples recovered by extraction depends on: (a) the inherent response of the particular GC detector used in the determinative step, and (b) the extent to which the sample is concentrated for analysis. It is the responsibility of the analyst(s) performing the sampling and analysis steps to adjust parameters so that the required detection limits can be obtained.

15.3.3 The reproducibility of this method for most compounds for which it has been evaluated has been determined to range from ±5 to ±30% (measured as the relative standard deviation) when replicate sampling cartridges are used (N>5). Sample recoveries for individual compounds generally fall within the range of 90 to 110%, but recoveries ranging from 65 to 125% are considered acceptable.

15.4 Method Safety

15.4.1 This procedure may involve hazardous materials, operations, and equipment. This method does not purport to address all of the safety problems associated with its use.

15.4.2 It is the users responsibility to consult and establish appropriate safety and health practices and determine the applicability of regulatory limitations prior to the implementation of this procedure. This should be part of the users SOP manual.

16. References

1. Riggin, R. M., *Compendium of Methods for the Determination of Toxic Organic Compounds in Ambient Air*, U. S. Environmental Protection Agency, Environmental Monitoring Systems Laboratory, Quality Assurance Division, Research Triangle Park, NC, EPA-600/4-84-041, April 1984.

2. Winberry, W. T. Jr., et al., "Determination of Benzo(a)Pyrene and Other Polynuclear Aromatic Hydrocarbons (PAHs) in Ambient Air Using Gas Chromatographic (GC) and High Performance Liquid Chromatographic (HPLC) Analysis: Method TO-13," in *Compendium of Methods for the Determination of Toxic Organic Compounds in Ambient Air, Second Supplement*, U. S. Environmental Protection Agency, Environmental Monitoring Systems Laboratory, Quality Assurance Division, Research Triangle Park, NC, EPA-600/4-89-018, March 1989.

3. Winberry, W. T. Jr., et al., "Determination of Organochlorine Pesticides in Indoor Air: Method IP-8," in *Compendium of Methods for the Determination of Air Pollutant in Indoor Air*, U. S. Environmental Protection Agency, Research Triangle Park, NC, EPA-600/4-90-010, May 1990.

4. "Standard Practice for Sampling and Analysis of Pesticides and Polychlorinated Biphenyls in Air," *Annual Book of ASTM Standards*, Method D4861-94, ASTM, Philadelphia, PA.

5. Lewis, R., and MacLeod, K., "Portable Sampler for Pesticides and Semi-Volatile Industrial Organic Chemicals in Air," *Anal. Chem.*, Vol. 54, 1982, pp. 310-315.

6. Winberry, W. T. Jr., et al., "Determination of Organochlorine Pesticides in Ambient Air Using Low Volume Polyurethane Foam (PUF) Sampling with Gas Chromatography/Electron Capture Detector (GC/ECD): Method TO-10, in *Compendium of Methods for the Determination of Toxic Organic Compounds in Ambient Air, Second Supplement*, U. S. Environmental Protection Agency, Research Triangle Park, NC, EPA-600/4-89-018, March 1989.

7. Lewis, R., and Brown, A., and Jackson, M., "Evaluation of Polyurethane Foam for Sampling of Pesticides, Polychlorinated Biphenyls and Polychlorinated Napththalenes in Ambient Air," *Anal. Chem.*, Vol. 49, 1977, pp. 1668-1672.

8. Armour, J., and Burke, J., "Method for Separating Polychlorinated Biphenyls from DDT and Its Analogs," *Journal of the Association of Official Analytical Chemists*, Vol. 53, No. 4, 1970, pp. 761-768.

9. *Manual of Analytical Methods for the Analysis of Pesticides in Human and Environmental Samples*, U. S. Environmental Protection Agency, Research Triangle Park, NC, EPA-600/8-80-038, June 1980 (NTIS No. PB82-208752).

10. *Carcinogens - Working with Carcinogens*, Department of Health, Education, and Welfare, Public Health Service, Center for Disease Control, National Institute for Occupational Safety and Health, Publication No. 77-206, August 1977.

11. *OSHA Safety and Health Standards, General Industry*, (29CFR1910), Occupational Safety and Health Administration, OSHA, 2206, Revised, January 1976.

12. "Safety in Academic Chemistry Laboratories," American Chemical Society Publication, Committee on Chemical Safety, 3rd Edition, 1979.

13. Kogan, V., Kuhlman, M., Coutant, R., and Lewis, R., "Aerosol Filtration in Sorbent Beds," *Journal of the Air and Waste Management Association*, Vol. 43, 1993, pp. 1367-1373.

14. Lewis, R., and Lee, R., "Air Pollution from Pesticide Sources, Occurrences and Dispersion," in: *Air Pollution from Pesticides and Agricultural Processes*, Lee, R., Editor, CRC Press, Boca Raton, FL, 1976, pp. 51-94.

15. Lewis, R., "Problem Associated with Sampling for Semi-Volatile Organic Chemicals in Air," in *Proceedings of the 1986 EPA/APCA Symposium on Measurement of Toxic Air Pollutants*, Air and Waste Management Association, Pittsburgh, PA, 1986, pp. 134-145.

16. Camann, D., Harding, J., and Lewis, R., "Trapping of Particle-Associated Pesticides in Indoor Air by Polyurethane Foam and Evaporation of Soil Track-In as a Pesticide Source," in: *Indoor Air* '90, Vol. 2, Walkinshaw, D., Editor, Canada Mortgage and Housing Corp., Ottawa, 1990, pp. 621-626.

17. Marple, V., Rubow, K., Turner, W., and Spengler, J., "Low Flow Rate Sharp Cut Impactors for Indoor Air Sampling Design and Calibration," *Journal of the Air Pollution Control Association*. Vol. 37, 1987, pp. 1303-1307.

18. Hsu, J., Wheeler, H., Camann, D., Shatterberg, H., Lewis, R., and Bond, A., "Analytical Methods for Detection of Non-Occupational Exposure to Pesticides," *Journal of Chromatographic Science*, Vol. 26, 1988, pp. 181-189.

19. Lewis, R. G., and Jackson, M. D., "Modification and Evaluation of a High-Volume Air Sampler for Pesticides and Semi-Volatile Industrial Organic Chemicals," *Anal. Chem.*, 54, 592-594, 1982.

20. Lewis, R. G., Jackson, M. D., and MacLeod, K. E., "Protocol for Assessment of Human Exposure to Airborne Pesticides," U. S. Environmental Protection Agency, Research Triangle Park, NC, EPA-600/2-80-180, May 1980.

21. Riggin, R. M., *Technical Assistance Document for Sampling and Analysis of Toxic Organic Compounds in Ambient Air*, U. S. Environmental Protection Agency, Research Triangle Park, NC, EPA-600/4-83-027, June 1983.

22. Longbottom, J. E., and Lichtenberg, J. J., "Methods for Organic Chemical Analysis of Municipal and Industrial Wastewater," U. S. Environmental Protection Agency, Cincinnati, OH, EPA-600/4-82-057, May 1982.

TABLE 1. COMPOUNDS FOR WHICH PROCEDURE HAS BEEN TESTED[1]

Compound	Recommended Analysis[2]	Compound	Recommended Analysis
Alachlor	GC/ECD	Folpet	GC/ECD
Aldrin	GC/ECD	Heptachlor	GC/ECD
Allethrin	HPLC/UV	Heptachlor epoxide	GC/ECD
Aroclor 1242	GC/ECD	Hexachlorobenzene	GC/ECD
Aroclor 1254	GC/ECD	Lindane (γ-BHC)	GC/ECD
Aroclor 1260	GC/ECD	Linuron	HPLC/UV
Atrazine	GC/NPD	Malathion	GC/NPD or FPD
Bendiocarb	HPLC/UV	Methyl parathion	GC/NPD or FPD
BHC (α- and β-Hexachlorocyclohexanes)	GC/ECD	Methoxychlor	GC/FCD
Captan	GC/ECD	Metolachlor	GC/ECD
Carbaryl	HPLC/UV	Mexacarbate	GC/FCD
Carbofuran	HPLC/UV	Mirex	GC/ECD
Chlordane, technical	GC/ECD	Monuron	HPLC/UV
Chlorothalonil	GC/ECD	Trans-nonachlor	GC/ECD
Chlorotoluron	HPLC/UV	Oxychlordane	GC/ECD
Chlorpyritos	GC/ECD	Pentachlorobenzene	GC/ECD
2,4-D esters and salts	GC/ECD	Pentachlophenol	GC/ECD
Dacthal	GC/ECD	Permethrin (cis and trans)	HPLC/UV
ρ,ρ-'DDT	GC/ECD	o-Phenylphenol	HPLC/UV
ρ,ρ-'DDE	GC/ECD	Phorate	GC/NPD or FPD
Diazinon	GC/NPD or FPD	Propazine	GC/NPD
Dicloran	GC/ECD	Propoxur (Baygon)	HPLC/UV
Dieldrin	GC/ECD	Pyrethrin	HPLC/UV
Dicofol	GC/ECD	Resmethrin	HPLC/UV
Dicrotophos	HPLC/UV	Ronnel	GC/ECD
Diuron	HPLC/UV	Simazine	HPLC/UV
Ethyl parathion	GC/NPD or FPD	Terbuthiuron	HPLC/UV
Fenvalerate	HPLC/UV	Trifluralin	GC/ECD
Fluometuron	HPLC/UV		

[1] The following recommendations are specific for that analyte for maximum sensitivity.
[2] GC = gas chromatography; ECD = electron capture detector, FPD = flame photometric detector; HPLC = high performance liquid chromatography; NPD = nitrogen-phosphorus detector; UV = ultraviolet absorption detector; GC/MS = gas chromatography/mass spectrometry may also be used.

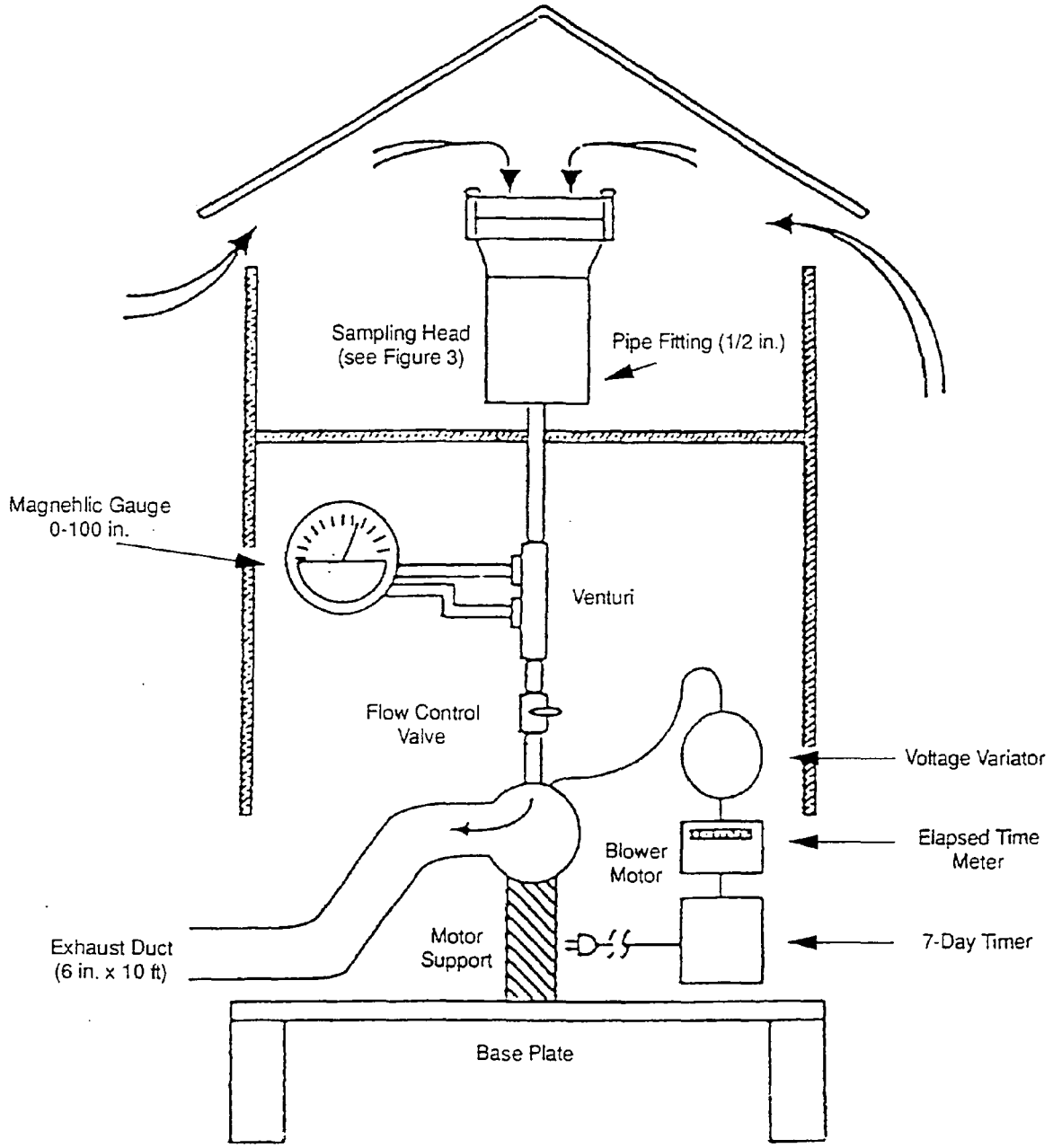

Figure 1. Typical high volume air sampler for monitoring common pesticides and PCBs.

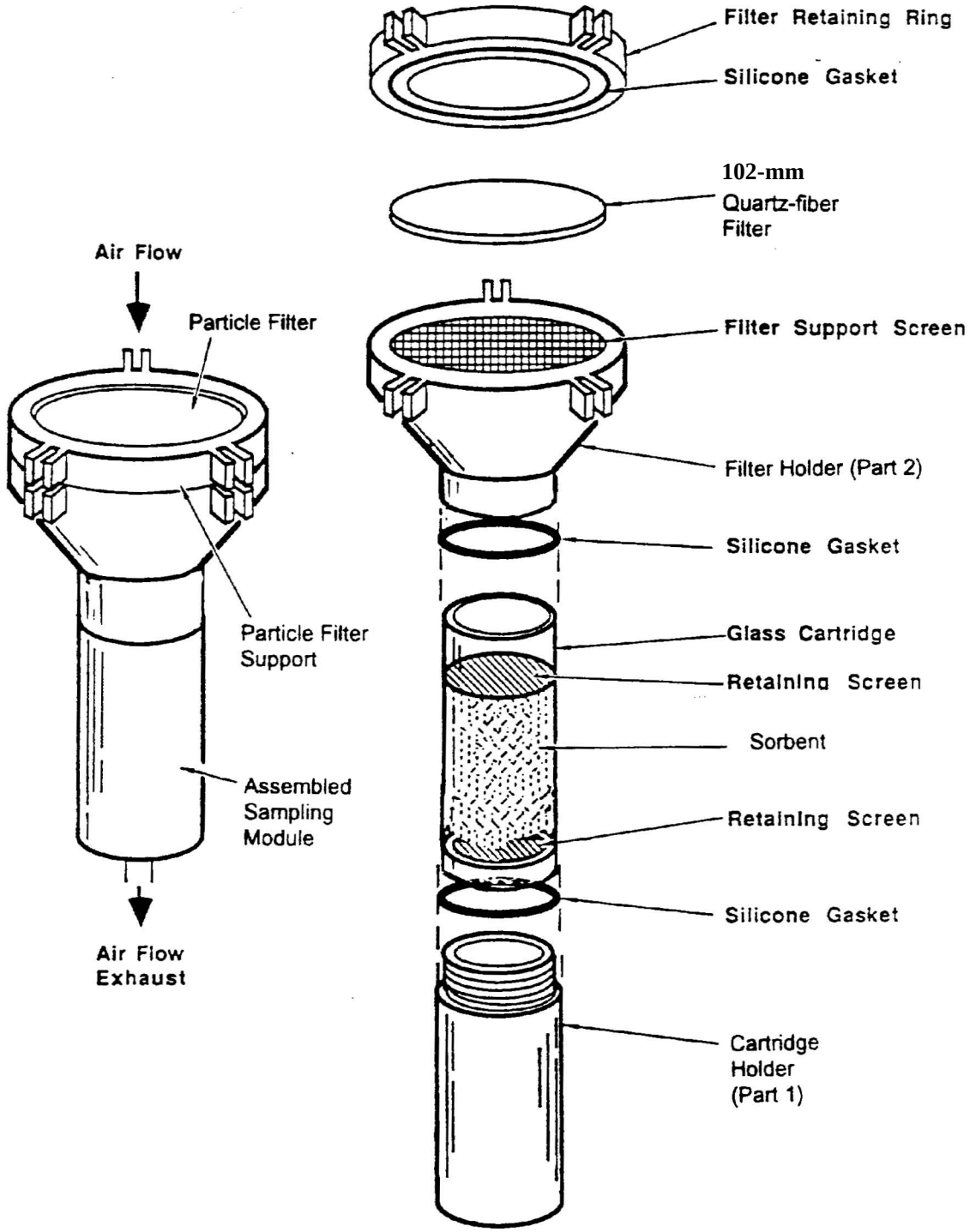

Figure 2. Typical absorbent cartridge assembly for sampling common pesticides and PCBs.

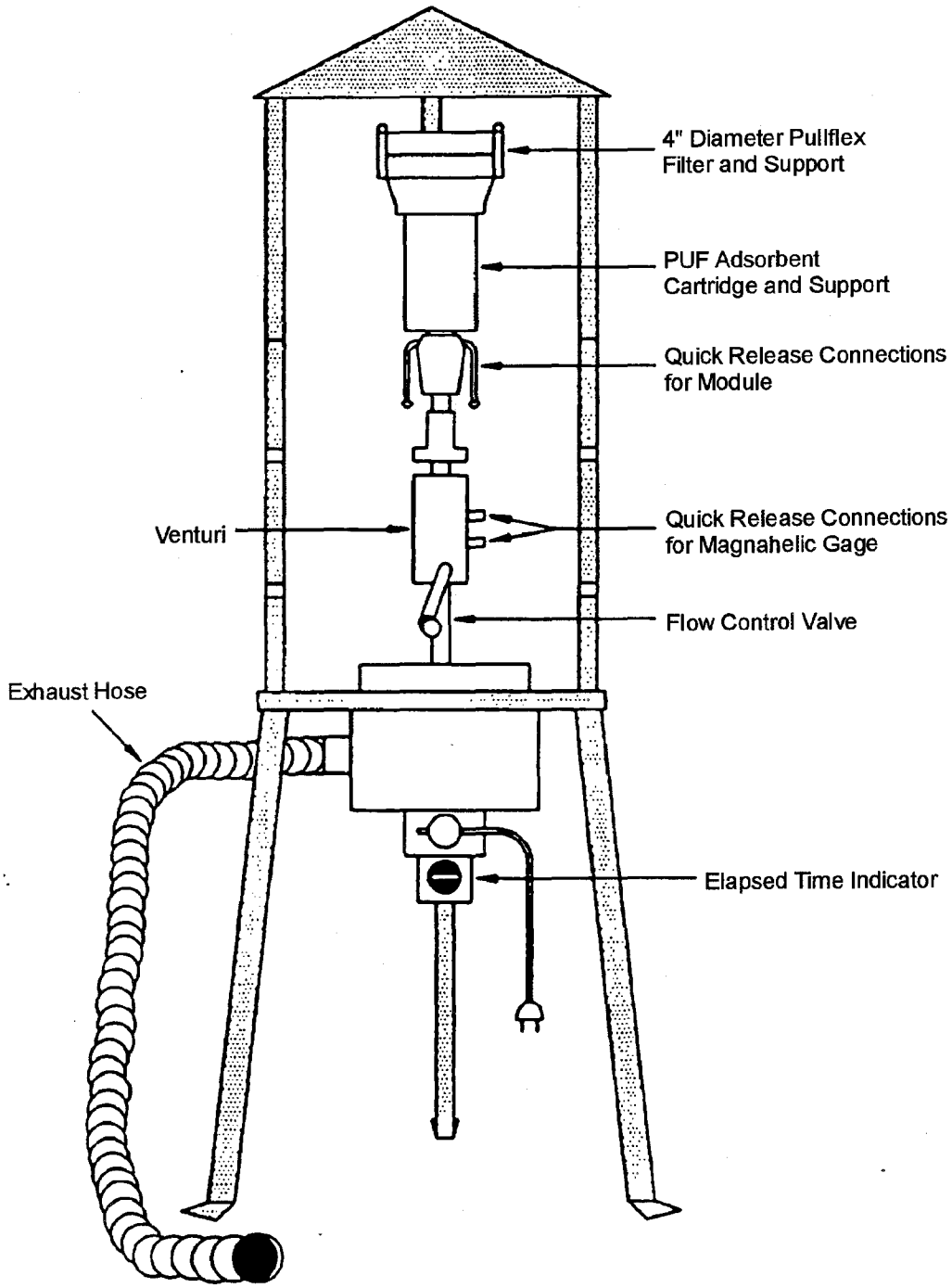

Figure 3. Portable high volume air sampler developed by EPA.

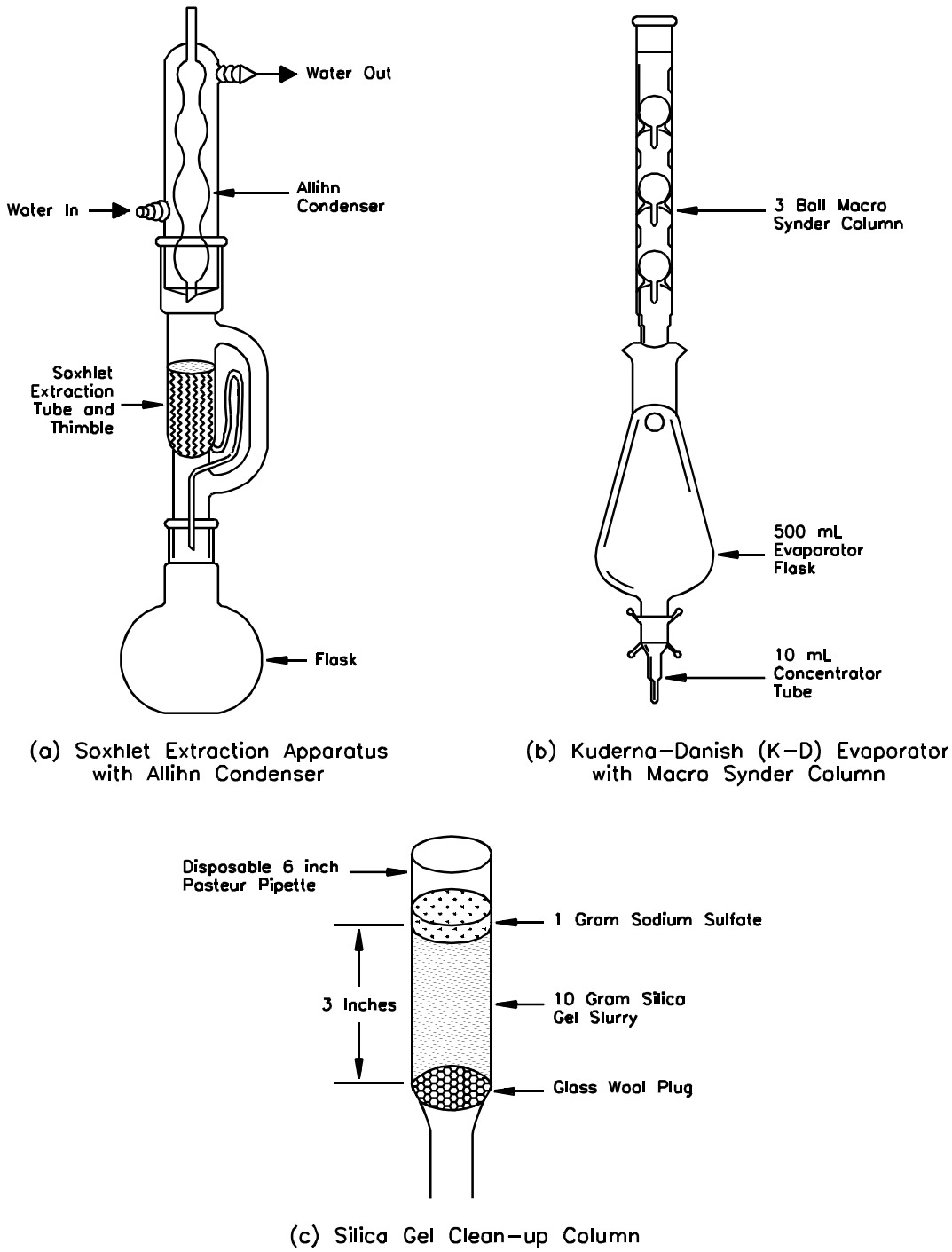

Figure 4. Apparatus used for sample clean-up and extraction.

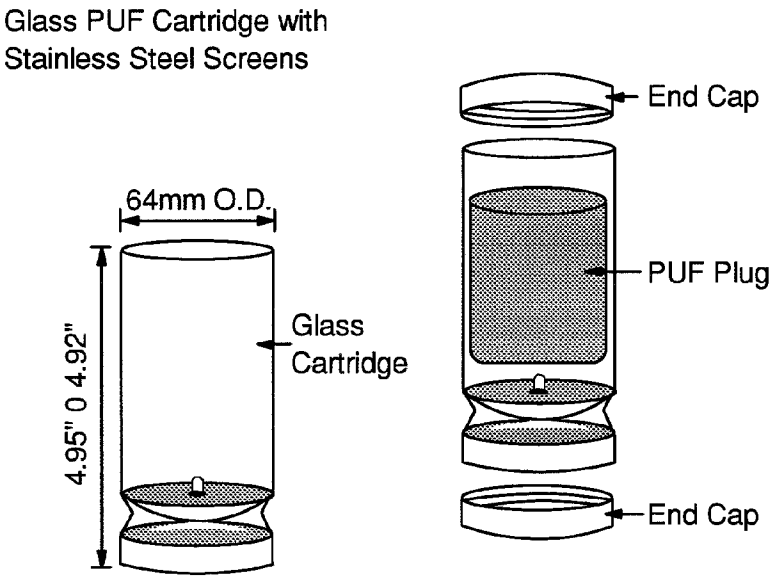

5a. Glass PUF cartridge, plug, and end caps.

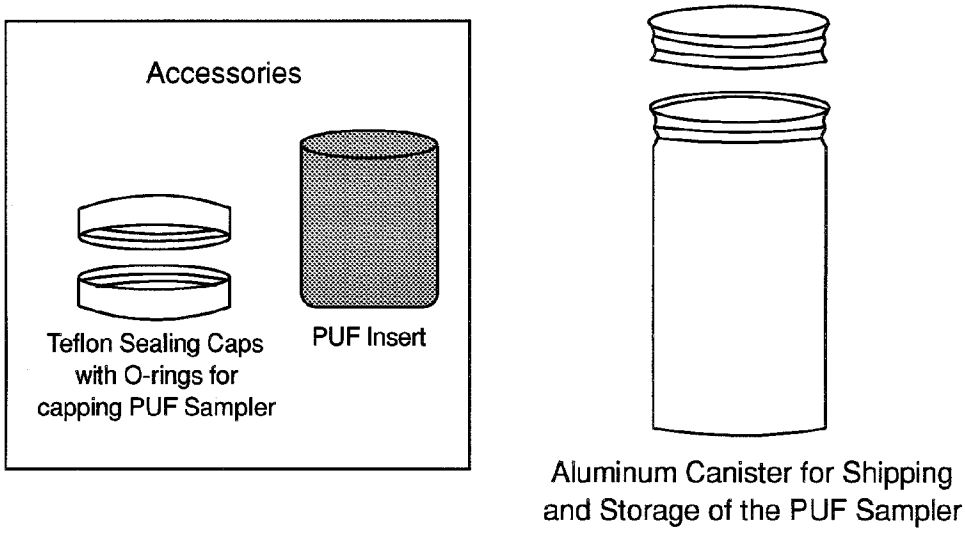

5b. PUF shipping container.

Figure 5. Glass PUF cartridge (5a) and shipping container (5b) for use with high-volume sampling systems.

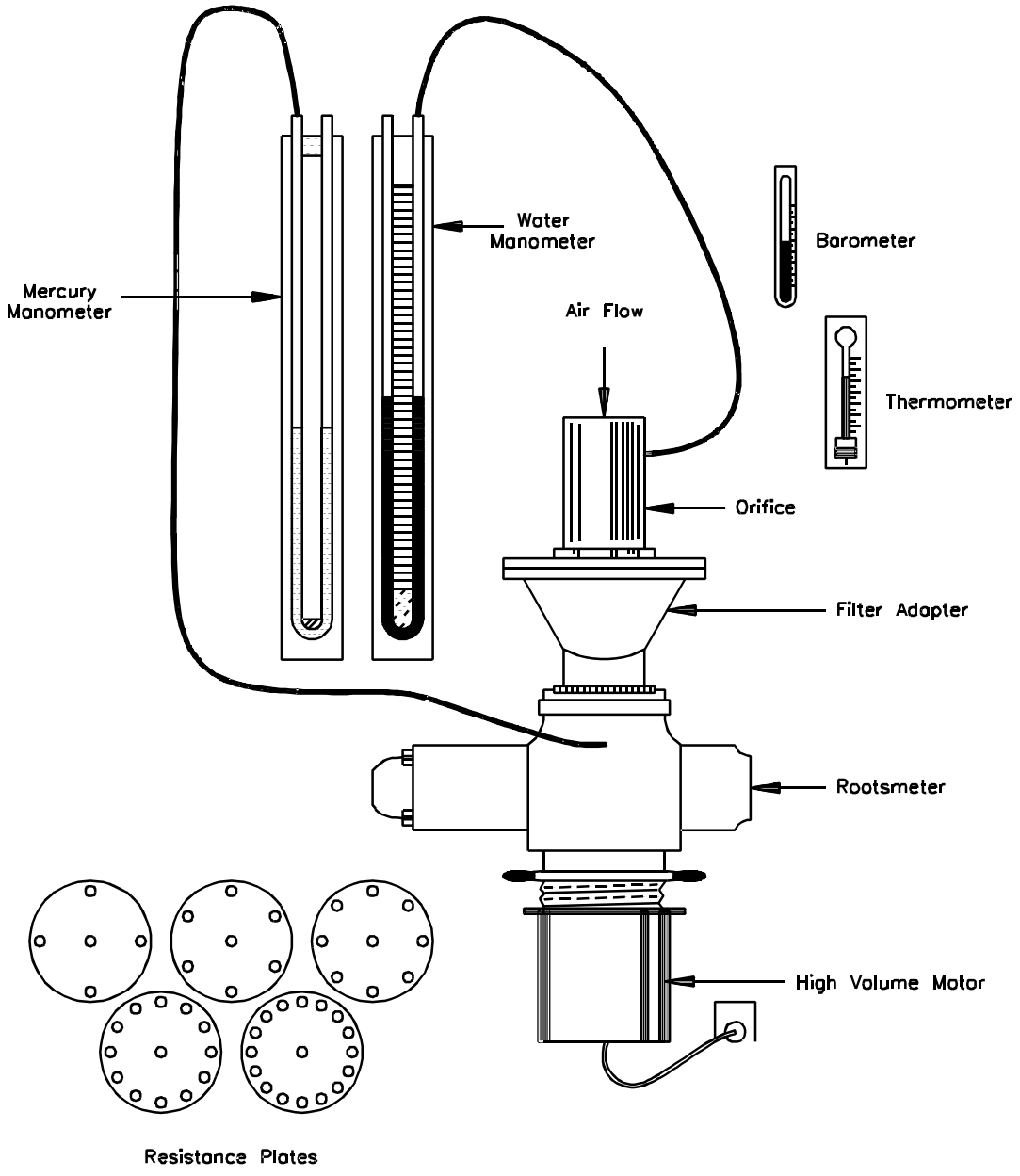

Figure 6. Positive displacement rootsmeter used to calibrate orifice transfer standard.

COMPENDIUM METHOD TO-4A
ORIFICE CALIBRATION DATA SHEET

T_1 _____ Name _____

P_1 _____ mmHg Date _____

Orifice No. _____

Rootsmeter No. _____

Resistance Plants (No. of holes)	Air Volume Measured by Rootsmeter V_m		Standard Volume, V_{std} (std m^3)	Time for Air Volume to Pass Through Rootsmeter, θ (min)	Rootsmeter Pressure Differential, ΔP (mm Hg)	Pressure Drop Across Orifice, ΔH (in. H_2O)	x-Axis Standard Flowrate, Q_{std} (std m^3/min)	Y - axis $\sqrt{\Delta H(P_1/P_{std})(298/T_1)}$ value
	(R^3)	(m^3)						
5	200	5.66						
7	200	5.66						
10	300	8.50						
13	300	8.50						
18	300	8.50						

Factors: $(R^3)(0.02832\ \frac{m^3}{R^3}) = m^3$ and (in. Hg) $25.4\ (\frac{\text{mm Hg}}{\text{in. Hg}})$ = mm Hg

Calculation Equations:

1. $V_{std} = V_m\ (\frac{P_1 - \Delta P}{P_{std}})(\frac{T_{std}}{T_1})$

where:

$T_{std} = 296°K$
$P_{std} = 760.0$ mm Hg

2. $Q_{std} = \frac{V_{std}}{\theta}$

Figure 7. Orifice calibration data sheet.

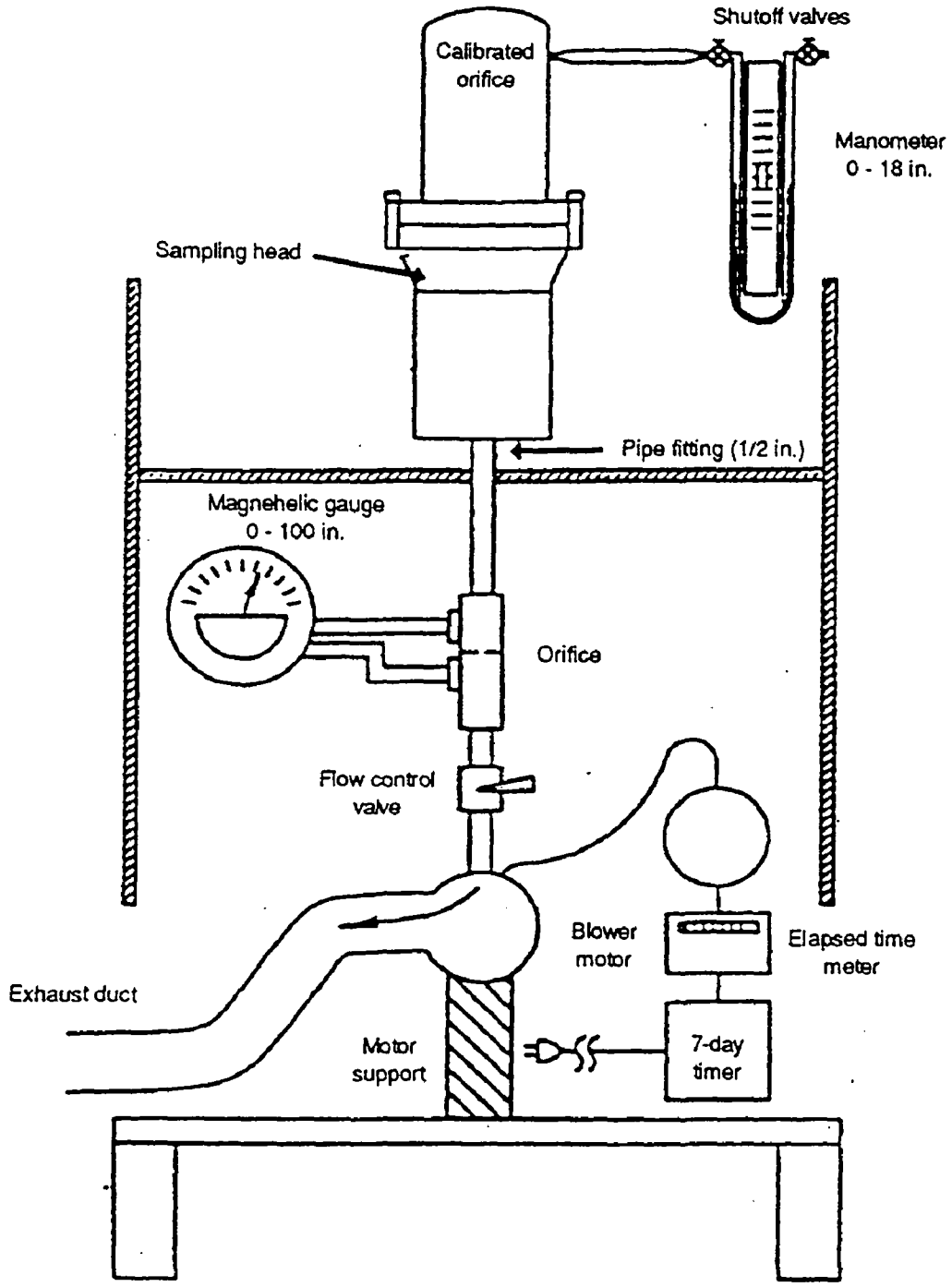

Figure 8. Field calibration configuration of the high-volume sampler for common pesticides and PCBs.

COMPENDIUM METHOD TO-4A
FIELD CALIBRATION DATA SHEET FOR SAMPLER CALIBRATION

Sampler ID: Calibration Orifice ID:

Sampler Location: Job No.:

High Volume Transfer Orifice Data:

Correlation Coefficient (CC1): Slope (M1):

(CC2): (M2):

Intercept (B1):

(B2):

Calibration Date: ____ Time:

Calibration Ambient Temperature: ____°F ____°C CALIBRATOR'S SIGNATURE

Calibration Ambient Barometric Pressure: ____ "Hg ____ mm Hg

Calibration set point (SP): _____

SAMPLER CALIBRATION

Actual values from calibration		Calibrated values		
Orifice manometer, inches (Y1)	Monitor Magnehelic, inches (Y2)	Orifice manometer (Y3)	Monitor Magnehelic (Y4)	Calculated value orifice flow, scm (X1)
	70			
	60			
	50			
	40			
	30			
	20			
	10			

Definitions

Y1 = Calibration orifice reading, in. H_2O

Y2 = Monitor Magnehelic reading, in. H_2O

P_a = Barometric pressure actual, mm Hg

B1 = Manfacturer's Calibration orifice Intercept

M1 = Manufacturer's Calibration orifice manometer slope

Y3 = Calculated value for orifice manometer

= $[Y1(Pa/760)(298/\{Ta + 273\})]^{½}$

Y4 = Calculated value for Magnehelic

= $[Y2(Pa/760)(298/\{Ta + 273\})]^{½}$

X1 = Calculated value orifice flow, scm

$= \frac{Y3 - B1}{M1}$

P_{std} = Barometric pressure standard, 760 mm Hg

T_a = Temperature actual, °C

T_{std} = Temperature standard, 25°C

Figure 9. Orifice transfer standard field calibration data sheet.

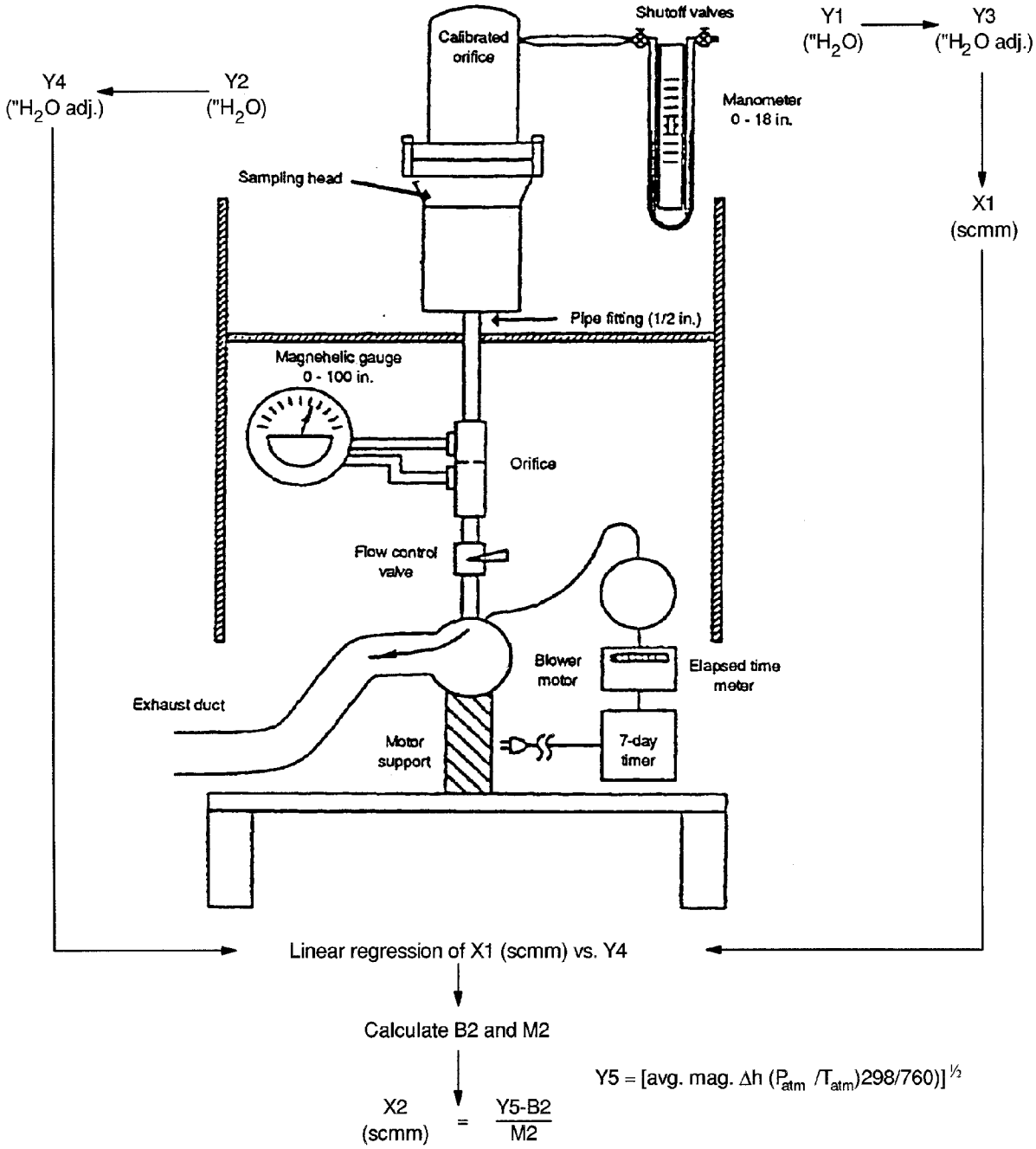

Figure 10. Relationship between orifice transfer standard and flow rate through sampler.

COMPENDIUM METHOD TO-4A
FIELD TEST DATA SHEET
GENERAL INFORMATION

Sampler I.D. No.: _____
Lab PUF Sample No.: _____
Sample location: _____
_____
_____

Operator: _____
Other: _____
_____
_____

PUF Cartridge Certification Date: _____
Date/Time PUF Cartridge Installed: _____
Elapsed Timer: _____
Start _____
Stop _____
Diff. _____
Sampling

M1 _____ **B1** _____
M2 _____ **B2** _____

	Start	Stop
Barometric pressure ("Hg)	_____	_____
Ambient Temperature (°F)	_____	_____
Rain	Yes _____ No _____	Yes _____ No _____

Sampling time
Start _____
Stop _____
Diff. _____

Audit flow check within ±10 of set point
_____ **Yes**
_____ **No**

TIME	TEMP	BAROMETRIC PRESSURE	MAGNEHELIC READING	CALCULATED FLOW RATE (scmm)	READ BY
Avg.					

Comments

_____
_____
_____

Figure 11. Field test data sheet.

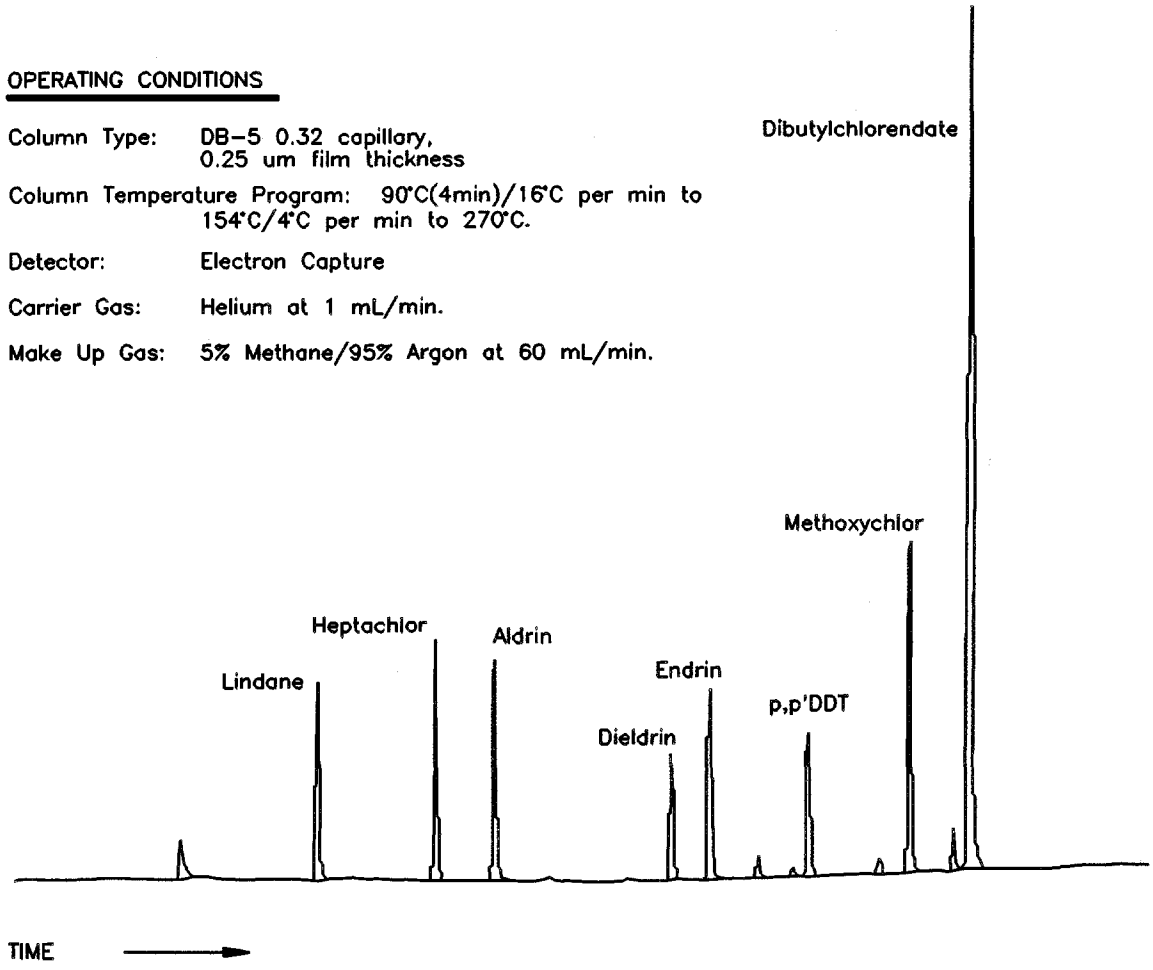

Figure 12. Chromatogram showing a mixture of single component pesticides determined by GC/ECD using a capillary column.

This Page Intentionally Left Blank

METHOD TO-5 Revision 1.0
April, 1984

METHOD FOR THE DETERMINATION OF ALDEHYDES AND KETONES IN AMBIENT AIR USING HIGH PERFORMANCE LIQUID CHROMATOGRAPHY (HPLC)

1. Scope

1.1 This document describes a method for determination of individual aldehydes and ketones in ambient air. With careful attention to reagent purity and other factors the method can detect most monofunctional aldehydes and ketones at the 1-2 ppbv level.

1.2 Specific compounds for which the method has been employed are listed in Table 1. Several studies have used the same basic method, with minor procedural differences, for analysis of ambient air (1-3).

2. Applicable Documents

2.1 ASTM Standards:
D 1356 Definitions of Terms Related to Atmospheric Sampling and Analysis(s)

2.2 Other Documents
Ambient air studies (1-3)
U.S. EPA Technical Assistance Document (4)

3. Summary of Method

3.1 Ambient air is drawn through a midget impinger containing 10 mL of 2N HC1/0.05% 2,4-dinitrophenylhydrazine (DNPH reagent) and 10 mL of isooctane. Aldehydes and ketones readily form stable 2,4-dinitrophenylhydrazones (DNPH derivatives).

3.2 The impinger solution is placed in a screw-capped vial having a teflon-lined cap and returned to the laboratory for analysis. The DNPH derivatives are recovered by removing the isooctane layer, extracting the aqueous layer with 10 mL of 70/30 hexane/methylene chloride, and combining the organic layers.

3.3 The combined organic layers are evaporated to dryness under a stream of nitrogen and the residue dissolved in methanol.

3.4 The DNPH derivatives are determined using reversed phase HPLC with an ultraviolet (UV) adsorption detector operated at 370 nm.

4. Significance

4.1 Aldehydes and ketones are emitted into the atmosphere from chemical operations and various combustion sources. In addition, several of these compounds (e.g., formaldehyde and acetaldehyde) are produced by photochemical degradation of other organic compounds. Many of these compounds are acutely toxic and/or carcinogenic, thus requiring their determination in ambient air in order to assess human health impacts.

4.2 Conventional methods for aldehydes and ketones have generally employed colorimetric techniques wherein only one or two compounds are detected, or the sum of numerous compounds is determined. The method described herein provides a means for specifically determining a wide variety of aldehydes and ketones at typical ambient concentrations.

5. Definitions

Definitions used in this document and any user prepared SOPs should be consistent with ASTM D1356(5). All abbreviations and symbols are defined within this document at the point of use.

6. Interferences

6.1 The only significant interferences in the method are certain isomeric aldehydes or ketones which may be unresolved by the HPLC system. Such interferences can often by overcome by altering the separation conditions (e.g., using alternate HPLC columns or mobile phase compositions).

6.2 Formaldehyde contamination of the DNPH reagent is a frequently encountered problem. The reagent must be prepared within 48 hours before use and must be stored in an uncontaminated environment before and after sampling to minimize blank problems. Acetone contamination is apparently unavoidable.

Consequently, the method cannot be used to accurately measure acetone levels except in highly contaminated environments.

7. Apparatus

7.1 Isocratic HPLC system-consisting of high pressure pump, injection valve, Zorbax ODS column (25 cm x 4.6 mm ID), variable wavelength UV detector, and data system or stripchart recorded. See Figure 3.

7.2 Sampling system-capable of accurately and precisely sampling 100-1000 mL/minute of ambient air. See Figure 1.

7.3 Stopwatch

7.4 Friction top metal can, e.g., one-gallon (paint can) - to hold DNPH reagent and samples

7.5 Thermometer - to record ambient temperature

7.6 Barometer (optional)

7.7 Analytical balance - 0.1 mg sensitivity

7.8 Reciprocating shaker

7.9 Midget impingers - jet inlet type - 25 mL volume

7.10 Ice bath - for cooling impingers during sampling

7.11 Nitrogen evaporator with heating block - for concentrating samples

7.12 Suction filtration apparatus - for filtering HPLC mobile phase.

7.13 Volumetric flasks - 100 mL and 500 mL.

7.14 Pipettes - various sizes, 1-10 mL.

7.15 Helium purge line (optional) - for degassing HPLC mobile phase.

7.16 Erlenmeyer flask, 1-liter - for preparing HPLC mobile phase.

7.17 Graduated cylinder, 1 liter - for preparing HPLC mobile phase.

7.18 Microliter syringe, 10-25 μL - for HPLC injector.

8. Reagents and Materials

8.1 Bottles, 10 oz. glass, with teflon-lined screw cap - for storing DNPH reagent.

8.2 Vials, 50 mL, with teflon-lined screw cap - for holding samples and extracts.

8.3 Disposable pipettes and bulbs.

8.4 Granular charcoal.

8.5 Methanol, hexane, methylene chloride, isooctane - distilled in glass or pesticide grade.

8.6 2,4-Dinitrophenylhydrazine - highest purity available (20% moisture).

8.7 Nitrogen, compressed gas cylinder - 99.99% purity for sample evaporation.

8.8 Polyester filters, 0.22 μm - Nuclepore or equiv.

8.9 DNPH derivatives of the components of interest - synthesized from DNPH and neat aldehydes according to reference (7). Recrystalized from ethanol before use.

9. Preparation of DNPH Reagent

9.1 Each batch of DNPH reagent should be prepared and purified within 48 hours of sampling, according to the procedure described in this section.

9.2 Two hundred and fifty milligrams of solid 2,4-dinitrophenylhydrazine and 90 mL of concentrated hydrochloric acid are placed into a 500 mL volumetric flask and the flask is filled to the mark with reagent water. The flask is then inverted several times or sonified until all of the solid material has dissolved.

9.3 Approximately 400 mL of the DNPH reagent is placed in a 16 ounce glass screw-capped bottle having a teflon-lined cap. Approximately 50 mL of a 70/30 (V/V) hexane/methylene chloride mixture is added to the bottle and the capped bottle is shaken for 15 minutes on a reciprocating shaker. The organic

layer is then removed and discarded by decanting as much as possible and using a disposable pipette to remove the remaining organic layer.

9.4 The DNPH reagent is extracted two more times as described in 9.3. The bottle is then tightly capped, sealed with teflon tape, and placed in a friction top can (paint can) containing a 1-2 inch layer of granulated charcoal. The bottle is kept in the sealed can prior to use.

9.5 A portion of the DNPH reagent is analyzed using the procedure described in Section 11 prior to use in order to ensure that adequate background levels are maintained.

10. Sampling

10.1 The sampling apparatus is assembled and should be similar to that shown in Figure 1. EPA Method 6 uses essentially the same sampling system (8). All glassware (e.g., impingers, sampling bottles, etc.) must be thoroughly rinsed with methanol and oven dried before use.

10.2 Prior to sample collection the entire assembly (including empty sample impingers) is installed and the flow rate checked at a value near the desired rate. In general flow rates of 100-1000 mL/minute are useful. Flow rates greater than ~1000 mL/minute should not be used because impinger collection efficiency may decrease. Generally calibration is accomplished using a soap bubble flow meter or calibrated wet test meter connected to the flow exit, assuming the entire system is sealed. ASTM Method D3686 describes an appropriate calibration scheme not requiring a sealed flow system downstream of the pump.

10.3 Ideally a dry gas meter is included in the system to record total flow. If a dry gas meter is not available the operator must measure and record the sampling flow rate at the beginning and end of the sampling period to determine sample volume. If the sampling period exceeds two hours the flow rate should be measured at intermediate points during the sampling period. Ideally a rotameter should be included to allow observation of the flow rate without interruption of the sampling process.

10.4 To collect an air sample two clean midget impingers are loaded with 10 mL of purified DNPH reagent and 10 mL of isooctane. The impingers are connected in series to the sampling system and sample flow is started. The following parameters are recorded on the data sheet (see Figure 3 for an example): date, sampling location, time, ambient temperature, barometric pressure (if available), relative humidity (if available), dry gas meter reading (if appropriate), flow rate, rotameter setting, DNPH reagent batch number, and dry gas meter and pump identification numbers.

10.5 The sampler is allowed to operate for the desired period, with periodic recording of the variables listed above. The total flow should not exceed ~80 liters. The operator must ensure that at least 2-3 mL of isooctane remains in the first impinger at the end of the sampling interval (i.e., for high ambient temperatures lower sampling volumes may be required).

10.6 At the end of the sampling period the parameters listed in 10.4 are recorded and the sample flow is stopped. If a dry gas meter is not used the flow rate must be checked at the end of the sampling interval. If the flow rate at the beginning and end of the sampling period differ by more than 15% the sample should be marked as suspect.

10.7 Immediately after sampling the impingers are removed from the sampling system. The contents of the first impinger are emptied into a clean 50 mL glass vial having a teflon-lined screw cap. The first impinger is then rinsed with the contents of the second (backup) impinger and the rinse solution is added to the vial. The vial is then capped, sealed with teflon tape and placed in a friction top can containing 1-2 inches of granular charcoal. The samples are stored in the can, refrigerated until analysis.

10.8 If a dry gas meter or equivalent total flow indicator is not used the average sample flow rate must be calculated according to the following equation:

$$Q_A = \frac{Q_1 + Q_2 \ldots . Q_N}{N}$$

where

Q_A = Average flow rate in mL/minute.
Q_1, $Q_2 \ldots . Q_N$ = Flow rate determined at the beginning, end, and intermediate points during sampling.
N = Number of points averaged.

10.9 The total flow is then calculated using the following equation:

$$V_m = \frac{(T_2 - T_1) Q_A}{1000}$$

V_m = Total volume sampled in liters at measured temperature and pressure
T_2 = Stop time
T_1 = Start time (T_2 - T_1 given in minutes)

11. Sample Analysis

11.1 Sample Preparation

11.1.1 The samples are returned to the laboratory in 50 mL screw-capped glass vials. To recover the DNPH derivatives the following procedure is employed.

11.1.2 The vials are shaken in a horizontal position on a reciprocating shaker for 10 minutes. The vials are then removed from the shaker and the isooctane layer is removed and placed in a second clean 50 mL screw-capped glass vial using a disposable pipette.

11.1.3 The remaining aqueous layer is extracted with 10 mL of 70/30 (V/V) hexane/methylene chloride in the same manner as described in 11.1.2. The organic layer is removed and combined with the isooctane extract.

11.1.4 The combined organic extracts are then concentrated to dryness at 40°C under a stream of pure nitrogen. When the sample just reaches dryness the vial is removed from the nitrogen stream and a measured volume (2-5 mL) of methanol is added to the vial. The vial is tightly capped and stored refrigerated until analysis.

11.2 HPLC Analysis

11.2.1 The instrument is assembled and calibrated as described in Section 12. Prior to each analysis the detector baseline is checked to ensure stable operation.

11.2.2 A 5-25 μL aliquot of the sample, dissolved in methanol, is drawn into a clean HPLC injection syringe. The sample injection loop is loaded and an injection is made. The data system, if available, is activated simultaneously with the injection and the point of injection is marked on the stripchart recorder.

11.2.3 After approximately one minute, the injection valve is returned to "load" position and the syringe and valve are flushed with methanol in preparation for the next sample analysis.

11.2.4 After elution of the last component of interest the acquisition is terminated and the component concentrations are calculated as described in Section 13.

11.2.5 After a stable baseline is achieved the system can be used for further sample analyses as described above.

11.2.6 If the concentration of a component exceeds the linear range of the instrument the sample should be diluted with methanol, or a smaller volume can be injected onto the HPLC.

12. HPLC Assembly and Calibration

12.1 The HPLC system is assembled as shown in Figure 3. The typical chromatographic performance and operating parameters are shown in Figure 4.

12.2 Mobile phase is prepared by mixing 800 mL of methanol and 200 mL of reagent water. This mixture is filtered through a 0.22 μm polyester membrane filter in all glass and teflon suction filtration apparatus. The filtered mobile phase is degassed by purging with helium gas for 10-15 minutes (~100 mL/minute) or by heating to ~60°C for 5-10 minutes in an Erlenmeyer flask covered with a watch glass. A constant back pressure restrictor (~50 psi) or short length (6-12 inches) of 0.01 inch I.D. teflon tubing should be placed after the detector to further eliminate mobile phase outgassing.

12.3 The mobile phase is placed in the HPLC solvent reservoir and the pump flow is set at 1 mL/minute and allowed to pump for 20-30 minutes prior to the first analysis. The detector is switched on at least 30 minutes prior to the first analysis and the detector output is displayed on a stripchart recorder or similar output device at a sensitivity of .008 absorbance units full scale (AUFS). Once a stable baseline is achieved the system is ready for calibration.

12.4 Calibration standards are prepared in methanol from the solid DNPH derivatives. Individual stock solutions of ~100 mg/L are prepared by dissolving 10 mg of the solid derivative in 100 mL of methanol. These individual solutions are used to prepare calibration standards containing all of the derivatives of interest at concentrations of 0.1 - 10 mg/L, which spans the concentration of interest for most ambient air work.

12.5 All calibration runs are performed as described for sample analyses in Section 11. Before initial use the operator should inject a series of calibration standards (at least three levels) spanning the concentration range of interest. Using the UV detector, a linear response range of approximately 0.1 to 10 mg/L should be achieved, for ~10 μL injection volumes. Linear response is indicated where a correlation coefficient of a least 0.999 for a linear least squares fit of the data (concentration versus area response) is obtained.

12.6 Once linear response has been documented an intermediate concentration standard near the anticipated levels for each component, but at least 10 times the detection limit, should be chosen for

daily calibration. The response for the various DNPH components should be within 10% day to day. If greater variability is observed more frequent calibration may be required to ensure that valid results are obtained.

12.7 The response for each component in the daily calibration standard is used to calculate a response factor according to the following equation:

$$RF_c = \frac{C_c x V_I}{R_c}$$

where

RF_c = response factor for the component of interest in nanograms injected/response unit (usually area counts).
C_c = concentration of component in the daily calibration standard (mg/L).
V_I = volume of calibration standard injected (μL).
R_c = response for component of interest in calibration standard (area counts).

13. Calculations

13.1 The volume of air sampled is often reported uncorrected for atmospheric conditions (i.e. under ambient conditions). However, the value can be adjusted to standard conditions (25°C and 760 mm pressure) using the following equation:

$$V_s = V_m x \frac{P_A}{760} x \frac{298}{273 + T_A}$$

where

V_s = total sample volume at 25°C and 760 mm Hg pressure (liters).
V_m = total sample volume under ambient conditions (liters). Calculated in 10.9 or from dry gas meter reading.
P_A = ambient pressure (mmHg).
T_A = ambient temperature (°C).

13.2 The concentration of each aldehyde (as the DNPH derivative) is calculated for each sample using the following equation:

$$W_d = RF_c x R_d x \frac{V_E}{V_I}$$

where

W_d = total quantity of derivative in the sample (μg).
RF_c = response factor calculated in 12.7
R_d = response for component in sample extract (area counts or other response units).
V_E = final volume of sample extract (mL).
V_I = volume of extract injected onto the HPLC system (μL).

13.3 The concentration of aldehyde in the original sample is calculated from the following equation:

$$C_A = \frac{W_d}{V_m (or V_s)} x \frac{MW_A}{MW_d} x 1000$$

where

C_A = concentration of aldehyde in the original sample (ng/L).
V_m or V_s are as specified in Section 13.1.
MW_A and MW_d are the molecular weights (g/mole) of the aldehyde and its corresponding DNPH derivative, respectively.

13.4 The aldehyde concentrations can be converted to ppbv using the following equation:

$$C_A(ppbv) = C_A(ng/L) x \frac{24.4}{MW_A}$$

where

C_A (ng/L) is calculated using V_s.

14. Performance Criteria and Quality Assurance

This section summarizes the quality assurance (QA) measures and provides guidance concerning performance criteria which should be achieved within each laboratory.

14.1 Standard Operating Procedures (SOPs)

14.1.1 Each user should generate SOPs describing the following activities as accomplished in their laboratory: 1) assembly, calibration and operation of the sampling system, 2) preparation, purification, storage and handling of DNPH reagent and samples, 3) assembly, calibration and operation of the HPLC system, and 4) all aspects of data recording and processing.

14.1.2 SOPs should provide specific stepwise instructions and should be readily available to, and understood by, the laboratory personnel conducting the work.

14.2 HPLC System Performance

14.2.1 The general appearance of the HPLC chromatograph should be similar to that shown in Figure 4.

14.2.2 The HPLC system efficiency and peak asymmetry factor should be determined in the following manner. A solution of the formaldehyde DNPH derivative corresponding to at least 20 times the detection limit should be injected with the recorder chart sensitivity and speed set to yield a peak approximately 75% of full scale and 1 cm wide at half height. The peak asymmetry factor is determined as shown in Figure 5, and should be between 0.8 and 1.8.

14.2.3 HPLC system efficiency is calculated according to the following equation:

$$N = 5.54\left(\frac{t_r}{W_{1/2}}\right)$$

where

N = column efficiency, theoretical plates
t_r = retention time of components (seconds)
$W_{1/2}$ = width of component peak at half height (seconds)

A column of efficiency of >5,000 should be obtained.

14.2.4 Precision of response for replicate HPLC injections should be ± 10% or less, day to day, for calibration standards. Precision of retention times should be ± 2%, on a given day.

14.3 Process Blanks

14.3.1 Prior to use a 10 mL aliquot of each batch of DNPH reagent should be analyzed as described in Section 11. In general, formaldehyde levels equivalent to >5 ng/L in a 60 liter sample should be achieved and other aldehyde levels should be <1 ng/L.

14.3.2 At least one field blank should be shipped and analyzed with each group of samples. The field blank is treated identically to the samples except that no air is drawn through the reagent. The same performance criteria described in 14.3.1 should be met for process blanks.

14.4 Method Precision and Accuracy

14.4.1 Analysis of replicate samples indicates a precision of ± 15-20% relative standard deviation can be readily achieved. Each laboratory should collect parallel samples periodically (at least one for each batch of samples) to document their precision in conducting the method.

14.4.2 Precision for replicate HPLC injections should be ± 10% or better, day to day, for calibration standards.

14.4.3 Method accuracy is difficult to assess because of the difficulty in generating accurate gaseous standards. Literature results indicate (1-3) recoveries of 75% or greater are achieved for a broad range of aldehydes. Each laboratory should periodically collect field samples wherein the impinger solution is spiked with a known quantity of the compound of interest, prepared as a dilute methanol solution. Formaldehyde cannot be spiked in this manner and therefore a solution of the DNPH derivative should be used for spiking purposes.

14.4.4 Before initial use of the method each laboratory should generate triplicate spiked samples at a minimum of three concentration levels, bracketing the range of interest for each compound. Triplicate nonspiked samples must also be processed. Recoveries of >70 ± 20% and blank levels of <5 ng/L for formaldehyde and 1 ng/L for the other compounds (assuming a 60 liter air sample) should be achieved.

References

(1) Grosjean, D., Fung, K., and Atkinson, R., "Measurements of Aldehydes in the Air Environment", Proc. Air Poll. Cont. Assoc., Paper 80-50.4, 1980.

(2) Grosjean, D. and Fung, K., "Collection Efficiencies of Cartridges and Micro-Impingers for Sampling of Aldehydes in Air as 2,4-Dinitrophenylhydrazones", Anal. Chem. 54, 1221-1224, 1982.

(3) Grosjean, D., "Formaldehyde and Other Carbonyls in Los Angeles Ambient Air", Environ. Sci. Technol. 16, 254-262, 1982.

(4) Riggin, R. M., "Technical Assistance Document for Sampling and Analysis of Toxic Organic Compounds in Ambient Air", EPA-600/4-83-027. U.S. Environmental Protection Agency, Research Triangle Park, North Carolina, 1983.

(5) Annual Book of ASTM Standards, Part 11.03, "Atmospheric Analysis", American Society for Testing and Materials, Philadelphia, Pennsylvania, 1983.

(6) Berry, D. A., Holdren, M. W., Lyon, T. F., Riggin, R. M., and Spicer, C. W., "Turbine Engine Exhaust Hydrocarbon Analysis-Interim Report on Task 1 and 2", Report on Contract No. F-08635-82-C-0131, Air Force Engineering and Services Center, Tyndall AFB, Florida, 1983.

(7) Shiner, R., Fuson, R., and Curtin, D., "The Systematic Identification of Organic Compounds", John Wiley and Sons, Inc., 5th ed., New York, 1964.

(8) "Method 6 Determination of SO_2 Emissions from Stationary Sources", Federal Register, Vol. 42, No. 160, August 1977.

TABLE 1. ALDEHYDES AND KETONES FOR WHICH THE METHOD HAS BEEN EVALUATED

Compound	Molecular Weight Derivative	Molecular Weight Compound	Typical Relative Retention Time[a]
Formaldehyde	210	30	1.0
Acetaldehyde	224	44	1.3
Acrolein	236	56	1.6
Propanal	238	58	1.7
Acetone	238	58	1.9[b]
Crotonaldehyde	250	70	2.3
Isobutyraldehyde	252	72	2.4
Methyl Ethyl Ketone	252	72	2.8
Benzaldehyde	286	106	3.2
Pentanal	266	86	3.7
o-Tolualdehyde	300	120	4.8
m-Tolualdehyde	300	120	5.1
p-Tolualdehyde	300	120	5.3
Hexanal	280	100	5.7

[a] Using HPLC conditions shown in Figure 4.
Formaldehyde = 1.0

[b] Acetone background levels in the reagent prevent its determination in most cases.

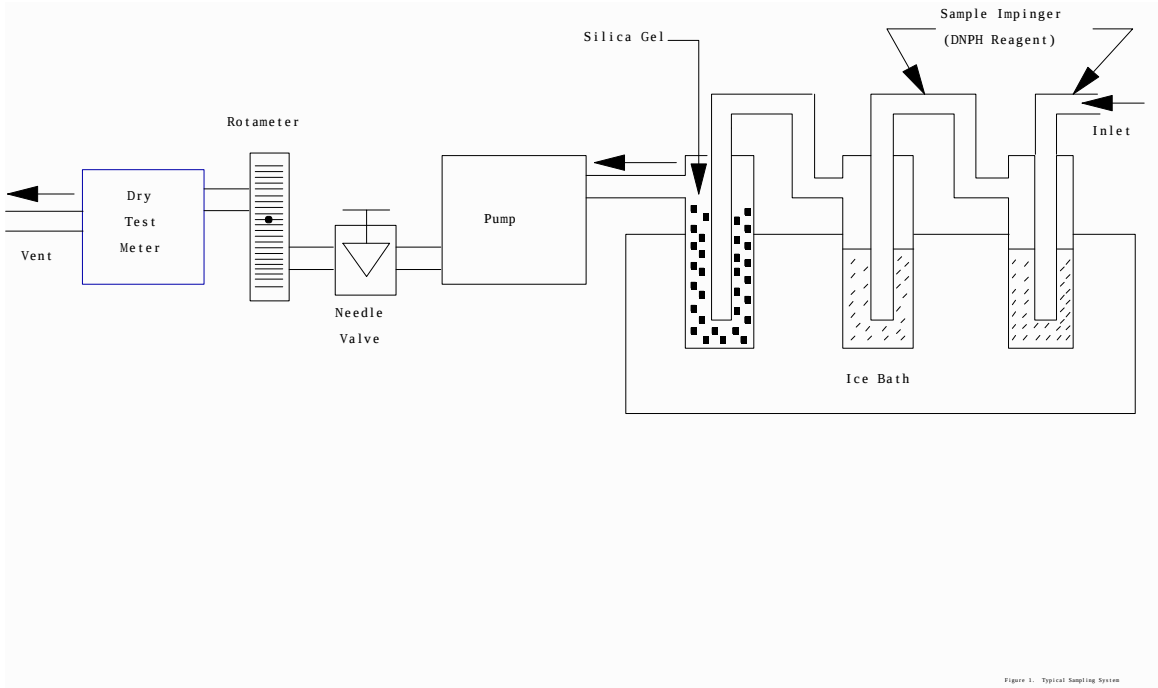

FIGURE 1. TYPICAL SAMPLING SYSTEM

SAMPLING DATA SHEET
(One Sample Per Data Sheet)

PROJECT: _____ DATE(S) SAMPLED: _____

SITE: _____ TIME PERIOD SAMPLED: _____

LOCATION: _____ OPERATOR: _____

INSTRUMENT MODEL NO: _____ CALIBRATED BY: _____

PUMP SERIAL NO: _____

SAMPLING DATA

Sample Number: _____
Start Time: _____ Stop Time: _____

Time	Dry Gas Meter Reading	Rotameter Reading	Flow Rate, Q ml/Min *	Ambient Temp. °C	Barometric Pressure, mmHg	Relative Humidity,%	Comments
1.							
2.							
3.							
4.							
N.							

Total Volume Data**

V_m = (Final - Initial) Dry Gas Meter Reading, or = _____ Liters

$$= \frac{Q_1 + Q_2 + Q_3 \ldots Q_N}{N} \times \frac{1}{1000 \times (\text{Sampling Time in Minutes})} = _____ \text{ Liters}$$

* Flowrate from rotameter or soap bubble calibrator (specify which).
** Use data from dry gas meter if available.

FIGURE 2. EXAMPLE SAMPLING DATA SHEET

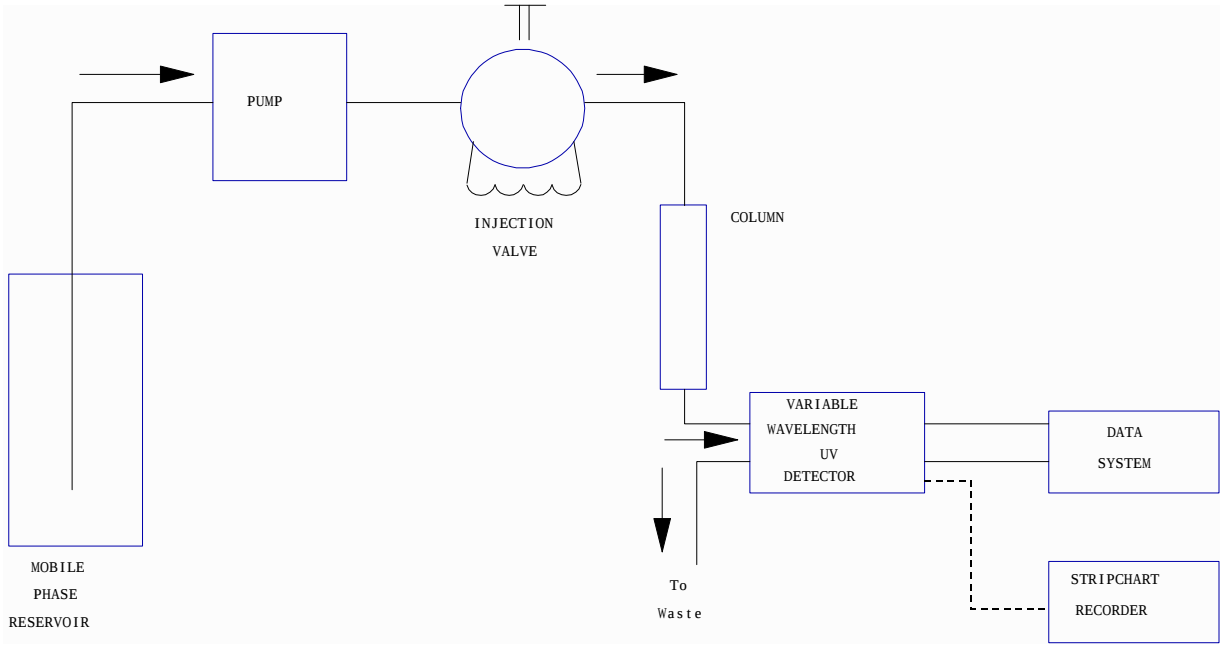

FIGURE 3. TYPICAL HPLC SYSTEM

Column - Zorbax ODS, 250 x 4.6 mm
Mobile Phase - 80/20 Methanol/H_2O
Flow Rate - 1 mL/Minute
Detector - UV at 370 nm

FIGURE 4. TYPICAL HPLC CHROMATOGRAM

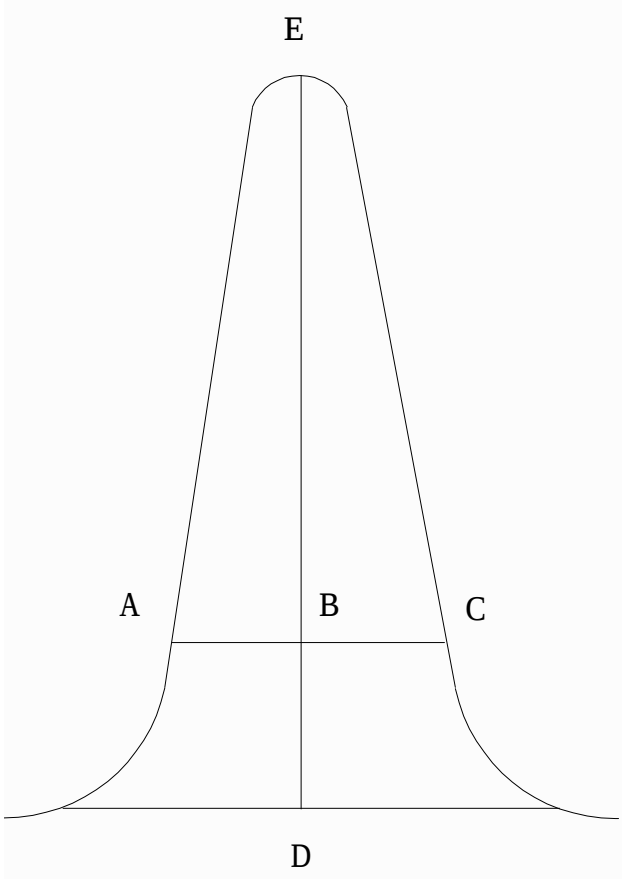

$$\text{Asymmetry Factor} = \frac{BC}{AB}$$

Example Calculation:

Peak Height = DE = 100 mm

10% Peak Height = BD = 10 mm

Peak Width at 10% Peak Height = AC = 23 mm

AB = 11 mm

BC = 12 mm

Therefore: $\text{Asymmetry Factor} = \frac{12}{11} = 1.1$

FIGURE 5. PEAK ASYMMETRY CALCULATION

METHOD TO-6 Revision 1.0
September, 1986

METHOD FOR THE DETERMINATION OF PHOSGENE IN AMBIENT AIR USING HIGH PERFORMANCE LIQUID CHROMATOGRAPHY

1. Scope

1.1 This document describes a method for determination of phosgene in ambient air, in which phosgene is collected by passage of the air through a solution of aniline, forming carbanilide. The carbanilide is determined by HPLC. The method can be used to detect phosgene at the 0.1 ppbv level.

1.2 Precision for phosgene spiked into a clean air stream is ±15-20% relative standard deviation. Recovery is quantitative within that precision, down to less than 3 ppbv. This method has been developed and tested by a single laboratory (1), and, consequently, each laboratory desiring to use the method should acquire sufficient precision and recovery data to verify performance under those particular conditions. This method is more sensitive, and probably more selective, than the standard colorimetric procedure currently in widespread use for workplace monitoring (2).

2. Applicable Documents

2.1 ASTM Standards

D1356 - Definitions of Terms Related to Atmospheric Sampling and Analysis (3).

2.2 Other Documents

Standard NIOSH Procedure for Phosgene (2).
U.S. EPA Technical Assistance Document (4).

3. Summary of Method

3.1 Ambient air is drawn through a midget impinger containing 10 mL of 2/98 aniline/toluene (by volume). Phosgene readily reacts with aniline to form carbanilide (1,3-diphenylurea), which is stable indefinitely.

3.2 After sampling, the impinger contents are transferred to a screw-capped vial having a Teflon-lined cap and returned to the laboratory for analysis.

3.3 The solution is taken to dryness by heating to 60°C on an aluminum heating block under a gentle stream of pure nitrogen gas. The residue is dissolved in 1 mL of acetonitrile.

3.4 Carbanilide is determined in the acetonitrile solution using reverse-phase HPLC with an ultraviolet absorbance (UV) detector operating at 254 nm.

4. Significance

4.1 Phosgene is widely used in industrial operations, primarily in the synthetic organic chemicals industry. In addition, phosgene is produced by photochemical degradation of chlorinated hydrocarbons (e.g., trichloroethylene) emitted from various sources. Although phosgene is acutely toxic, its effects at low levels (i.e., 1 ppbv and below) are unknown. Nonetheless, its emission into and/or formation in ambient air is of potential concern.

4.2 The conventional method for phosgene has utilized a colorimetric procedure involving reaction with 4,4'-nitrobenzyl pyridine in diethyl phthalate. This method cannot detect phosgene levels below 10 ppbv and is subject to numerous interferences. The method described herein is more sensitive (0.1 ppbv detection limit) and is believed to be more selective due to the chromatographic separation step. However, the method needs to be more rigorously tested for interferences before its degree of selectivity can be firmly established.

5. Definitions

Definitions used in this document and in any user-prepared SOPs should be consistent with ASTM D1356 (3). All abbreviations and symbols are defined within this document at the point of use.

6. Interferences

6.1 There are very few interferences in the method, although this aspect of the method needs to be more thoroughly investigated. Ambient levels of nitrogen oxides, ozone, water vapor, and SO_2 are known not to interfere. Chloroformates can cause interferences by

reacting with the aniline to form urea, which produces a peak that overlies the carbanilide peak in the HPLC trace. Presence of chloroformates should be documented before use of this method. However, the inclusion of a HPLC step overcomes most potential interferences from other organic compounds. High concentrations of acidic materials can cause precipitation of aniline salts in the impinger, thus reducing the amount of available reagent.

6.2 Purity of the aniline reagent is a critical factor, since traces of carbanilide have been found in reagent-grade aniline. This problem can be overcome by vacuum distillation of aniline in an all-glass apparatus.

7. Apparatus

7.1 Isocratic high performance liquid chromatography (HPLC) system consisting of a mobile-phase reservoir, a high-pressure pump, an injection valve, a Zorbax ODS or C-18 reverse-phase column, or equivalent (25 cm x 4.6 mm ID), a variable-wavelength UV detector operating at 254 nm, and a data system or strip-chart recorder (Figure 1).

7.2 Sampling system - capable of accurately and precisely sampling 100-1000 mL/minute of ambient air (Figure 2).

7.3 Stopwatch.

7.4 Friction-top metal can, e.g., one-gallon (paint can) - to hold sampling reagent and samples.

7.5 Thermometer - to record ambient temperature.

7.6 Barometer (optional).

7.7 Analytical balance - 0.1 mg sensitivity.

7.8 Midget impingers - jet inlet type, 25 mL.

7.9 Nitrogen evaporator with heating block - for concentrating samples.

7.10 Suction filtration apparatus - for filtering HPLC mobile phase.

7.11 Volumetric flasks - 100 mL and 500 mL.

7.12 Pipettes - various sizes, 1-10 mL.

7.13 Helium purge line (optional) - for degassing HPLC mobile phase.

7.14 Erlenmeyer flask, 1-L - for preparing HPLC mobile phase.

7.15 Graduated cylinder, 1 L - for preparing HPLC mobile phase.

7.16 Microliter syringe, 10-25 uL - for HPLC injection.

8. Reagents and Materials

8.1 Bottles, 16 oz. glass, with Teflon-lined screw cap - for storing sampling reagent.

8.2 Vials, 20 mL, with Teflon-lined screw cap - for holding samples and extracts.

8.3 Granular charcoal.

8.4 Acetonitrile, toluene, and methanol - distilled in glass or pesticide grade.

8.5 Aniline - 99+%, gold label from Aldrich Chemical Co., or equivalent.

8.6 Carbanilide - highest purity available; Aldrich Chemical Co., or equivalent.

8.7 Nitrogen, compressed gas cylinder - 99.99% purity for sample evaporation.

8.8 Polyester filters, 0.22 um - Nuclepore, or equiv.

9. Preparation of Sampling Reagent

9.1 Sampling reagent is prepared by placing 5.0 mL of aniline in a 250-mL volumetric flask and diluting to the mark with toluene. The flask is inverted 10-20 times to mix the reagent. The reagent is then placed in a clear 16-ounce bottle with a Teflon-lined screw cap. The reagent is refrigerated until use.

9.2 Before use, each batch of reagent is checked for purity by analyzing a 10-mL portion according to the procedure described in Section 11. If acceptable purity (<50 ng of carbanilide per 10 mL of reagent) is not obtained, the aniline or toluene is probably contaminated.

10. Sampling

10.1 The sampling apparatus is assembled and should be similar to that shown in Figure 2. EPA Method 6 uses essentially the same sampling system (5). All glassware (e.g., impingers, sampling bottles, etc.) must be thoroughly rinsed with methanol and oven-dried before use.

10.2 Before sample collection, the entire assembly (including empty sample impingers) is installed and the flow rate checked at a value near the desired rate. Flow rates greater than 1000 mL/minute (±2%) should not be used because impinger

collection efficiency may decrease. Generally, calibration is accomplished using a soap bubble flow meter or calibrated wet test meter connected to the flow exit, assuming that the entire system is sealed. ASTM Method D3686 describes an appropriate calibration scheme that does not require a sealed-flow system downstream of the pump (3).

10.3 Ideally, a dry gas meter is included in the system to record total flow, if the flow rate is sufficient for its use. If a dry gas meter is not available, the operator must measure and record the sampling flow rate at the beginning and end of the sampling period to determine sample volume. If the sampling time exceeds two hours, the flow rate should be measured at intermediate points during the sampling period. Ideally, a rotameter should be included to allow observation of the flow rate without interruption of the sampling process.

10.4 To collect an air sample, the midget impingers are loaded with 10 mL each of sampling reagent. The impingers are installed in the sampling system and sample flow is started. The following parameters are recorded on the data sheet (see Figure 3 for an example): date, sampling location, time, ambient temperature, barometric pressure (if available), relative humidity (if available), dry gas meter reading (if appropriate), flow rate, rotameter setting, sampling reagent batch number, and dry gas meter and pump identification numbers.

10.5 The sampler is allowed to operate for the desired period, with periodic recording of the variables listed above. The total flow should not exceed 50 L. If it does, the operator must use a second impinger.

10.6 At the end of the sampling period, the parameters listed in Section 10.4 are recorded and the sample flow is stopped. If a dry gas meter is not used, the flow rate must be checked at the end of the sampling interval. If the flow rates at the beginning and end of the sampling period differ by more than 15%, the sample should be marked as suspect.

10.7 Immediately after sampling, the impinger is removed from the sampling system. The contents of the impinger are emptied into a clean 20-mL glass vial with a Teflon-lined screw cap. The impinger is then rinsed with 2-3 mL of toluene and the rinse solution is added to the vial. The vial is then capped, sealed with Teflon tape, and placed in a friction-top can containing 1-2

inches of granular charcoal. The samples are stored in the can and refrigerated until analysis.

10.8 If a dry gas meter or equivalent total flow indicator is not used, the average sample flow rate must be calculated according to the following equation:

$$Q_A = \frac{Q_1 + Q_2 \ldots . Q_N}{N}$$

where

Q_A = average flow rate (mL/minute).

$Q_1, Q_2 \ldots . Q_N$ = flow rates determined at the beginning, end, and intermediate points during sampling.

N = number of points averaged.

10.9 The total flow is then calculated using the following equation:

$$V_m = \frac{(T_2 - T_1) Q_A}{1000}$$

where

V_m = total sample volume (L) at measured temperature and pressure.

T_2 = stop time.

T_1 = start time.

T_1-T_2 = total sampling time (minutes).

Q_a = average flow rate (mL/minute).

11. Sample Analysis

11.1 Sample Preparation

11.1.1 The samples are returned to the laboratory in 20-ml screw-capped vials and refrigerated in charcoal containing cans until analysis.

11.1.2 The sample vial is placed in an aluminum heating block maintained at 60°C and a gentle stream of pure nitrogen gas is directed across the sample.

11.1.3 When the sample reaches complete dryness, the vial is removed from the heating block, capped, and cooled to near room temperature. A 1-mL volume of HPLC mobile phase (50/50 acetonitrile/water) is placed in the vial.

The vial is then capped and gently shaken to dissolve the residue.

11.1.4 The concentrated sample is then refrigerated until HPLC analysis, as described in Section 11.2.

11.2 HPLC Analysis

11.2.1 The HPLC system is assembled and calibrated as described in Section 12. The operating parameters are as follows:

Column: C-18 RP
Mobile Phase: 30% acetonitrile/70% distilled water
Detector: ultraviolet, operating at 254 nm
Flow Rate: 1 mL/min

Before each analysis, the detector baseline is checked to ensure stable operation.

11.2.2 A 25-uL aliquot of the sample, dissolved in HPLC mobile phase, is drawn into a clean HPLC injection syringe. The sample injection loop is loaded and an injection is made. The data system is activated simultaneously with the injection and the point of injection is marked on the strip-chart recorder.

11.2.3 After approximately one minute, the injection valve is returned to the "load" position and the syringe and valve are flushed with mobile phase in preparation for the next sample analysis.

11.2.4 After elution of carbanilide, data acquisition is terminated and the component concentrations are calculated as described in Section 13.

11.2.5 Once a stable baseline is achieved, the system can be used for further sample analyses as described above.

11.2.6 If the concentration of carbanilide exceeds the linear range of the instruments, the sample should be diluted with mobile phase, or a smaller volume can be injected into the HPLC.

11.2.7 If the retention time is not duplicated, as determined by the calibration curve, you may increase or decrease the acetonitrile/water ratio to obtain the correct elution time, as specified in Figure 4. If the elution time is too long, increase the ratio; if it is too short, decrease the ratio.

11.2.8 If a dirty column causes improper detection of carbanilide, you may reactivate the column by reverse solvent flushing utilizing the following sequence: water, methanol, acetonitrile, dichloromethane, hexane, acetonitrile, then 50/50 acetonitrile in water.

12. HPLC Assembly and Calibration

12.1 The HPLC system is assembled and operated according to the parameters outlined in Section 11.2.1. An example of a typical chromatogram obtained using the above parameters is shown in Figure 4.

12.2 The mobile phase is prepared by mixing 500 mL of acetonitrile and 500 mL of reagent water. This mixture is filtered through a 0.22-um polyester membrane filter in an all-glass and Teflon suction filtration. A constant back pressure restrictor (50 psi) or short length (6-12 inches) of 0.01-inch I.D. Teflon tubing should be placed after the detector to eliminate further mobile phase outgassing.

12.3 The mobile phase is placed in the HPLC solvent reservoir and the pump is set at a flow rate of 1 mL/minute and allowed to pump for 20-30 minutes before the first analysis. The detector is switched on at least 30 minutes before the first analysis and the detector output is displayed on a strip-chart recorder or similar output device at a sensitivity of ca 0.008 absorbance units full scale (AUFS). Once a stable baseline is achieved, the system is ready for calibration.

12.4 Carbanilide standards are prepared in HPLC mobile phase. A concentrated stock solution of 100 mg/L is prepared by dissolving 10 mg of carbanilide in 100 mL of mobile phase. This solution is used to prepare calibration standards containing concentrations of 0.05-5 mg/L.

12.5 Each calibration standard (at least five levels) is analyzed three times and area response is tabulated against mass injected. All calibration runs are performed as described for sample analyses in Section 11. Using the UV detector, a linear response range (Figures 5a through 5e) of approximately 0.1 to 10 mg/L should be achieved for a 25-uL injection volumes. The results may be used to prepare a calibration curve, as illustrated in Figure 6. Linear response is indicated where a correlation coefficient of at least 0.999 for a linear least-squares fit of data (concentration versus area response) is obtained.

12.6 Once linear response has been documented, an intermediate concentration standard near the anticipated levels for ambient air, but at least 10 times the detection limit, should be chosen for daily calibration. The response for carbanilide should be within 10% day to day. If greater variability is observed, more frequent calibration may be required to ensure that valid results are obtained or a new calibration curve must be developed from fresh standards.

12.7 The response for carbanilide in the daily calibration standard is used to calculate a response factor according to the following equation:

$$RF_c = \frac{C_c \ X \ V_I}{R_c}$$

where

RF_c = response factor (usually area counts) for carbanilide in nanograms injected/response unit.

C_c = concentration (mg/L) of carbanilide in the daily calibration standard.

V_I = volume (uL) of calibration standard injected.

R_c = response (area counts) for carbanilide in calibration standard.

13. Calculations

13.1 The volume of air sampled is often reported uncorrected for atmospheric conditions (i.e., under ambient conditions). The value should be adjusted to standard conditions (25°C and 760 mm pressure) using the following equation:

$$V_s = V_m \times \frac{P_A}{760} \times \frac{298}{273 + T_A}$$

where

V_s = total sample volume (L) at 25°C and 760 mm Hg pressure.

V_m = total sample volume (L) under ambient conditions, calculated as in Section 10.9 or from dry gas meter reading.

P_A = ambient pressure (mm Hg).

T_A = ambient temperature (°C).

13.2 The concentration of carbanilide is calculated for each sample using the following equation:

$$W_d = RF_c \; X \; R_d \; X \frac{V_E}{V_I}$$

where

W_d = total quantity of carbanilide (ug) in the sample.

RF_c = response factor calculated in Section 12.7.

R_d = response (area counts or other response units) for carbanilide in sample extract.

V_E = final volume (mL) of sample extract.

V_I = volume (uL) of extract injected into the HPLC system.

13.3 The concentration of phosgene in the original sample is calculated from the following equation:

$$C_A = \frac{W_d}{V_m \; (or \; V_s)} \times \frac{99}{212} \times 1000$$

where

C_A = concentration of phosgene (ng/L) in the original sample.

W_d = total quantity of carbanilide (ug) in sample.

V_m = total sample volume (L) under ambient conditions.

V_c = total sample volume (L) at 25°C and 760 mm Hg.

$\frac{99}{212}$ = the molecular weights (g/mole) of phosgene and carbanilide are 99 and 212 g/mole, respectively.

13.4 The phosgene concentrations can be converted to ppbv using the following equation:

$$C_A \; (ppbv) = C_A \; (ng/L) \times \frac{24.4}{99}$$

where

C_A (ng/L) is calculated using V_s.

14. Performance Criteria and Quality Assurance

This section summarizes required quality assurance (QA) measures and provides guidance concerning performance criteria that should be achieved within each laboratory.

14.1 Standard Operating Procedures (SOPs).

14.1.1 Users should generate SOPs describing the following activities in their laboratory: 1) assembly, calibration, and operation of the sampling system with make and model of equipment used; 2) preparation, purification, storage, and handling of sampling reagent and samples; 3) assembly, calibration, and operation of the HPLC system with make and model of equipment used; and 4) all aspects of data recording and processing, including lists of computer hardware and software used.

14.1.2 SOPs should provide specific stepwise instructions and should be readily available to and understood by the laboratory personnel conducting the work.

14.2 HPLC System Performance

14.2.1 The general appearance of the HPLC chromatogram should be similar to that illustrated in Figure 4.

14.2.2 The HPLC system efficiency and peak asymmetry factor should be determined in the following manner: A solution of carbanilide corresponding to at least 20 times the detection limit should be injected with the recorder chart sensitivity and speed set to yield a peak approximately 75% of full scale and 1 cm wide at half height. The peak asymmetry factor is determined as shown in Figure 7, and should be between 0.8 and 1.8.

14.2.3 HPLC system efficiency is calculated according to the following equation:

$$N = 5.54 \frac{t_r}{W_{1/2}}$$

where

N = column efficiency (theoretical plates).

t_r = retention time (seconds) of carbanilide.

$W_{1/2}$ = width of component peak at half height (seconds).

A column efficiency of >5,000 theoretical plates should be obtained.

14.2.4 Precision of response for replicate HPLC injections should be ±10% or less, day to day, for calibration standards. Precision of retention times should be ±2%, on a given day.

14.3 Process Blanks

14.3.1 Before use, a 10-mL aliquot of each batch of sampling reagent should be analyzed as described in Section 11. The blank should contain less than 50 ng of carbanilide per 10-mL aliquot.

14.3.2 At least one field blank or 10% of the field samples, whichever is larger, should be shipped and analyzed with each group of samples. The field blank is treated identically to the samples except that no air is drawn through the reagent. The same performance criteria described in Section 14.3.1 should be met for process blanks.

14.4 Method Precision and Recovery

14.4.1 Analysis of replicate samples indicates that a precision of ±15-20% relative standard deviation can be readily achieved (see Table 1). Each laboratory should collect parallel samples periodically (at least one for each batch of samples) to document its precision in conducting the method.

14.4.2 Precision for replicate HPLC injections should be ±10% or better, day to day, for calibration standards.

14.4.3 Before using the method in the field, each laboratory must confirm the performance of the method under its particular conditions. Since static, dilute, gas phase standards of phosgene are unstable, a dynamic flow/permeation tub system should be assembled as described in the literature (1). ASTM Method D 3609(3) should be used as the protocol for operating such a system.

14.4.4 Once a suitable dynamic flow/permeation tube system has been constructed, a series of three samples from the outlet gas stream (60 L) should be sampled at three different spike levels (achieved by adjusting the air

flow through the permeation chamber). Precision and recovery data comparable to those shown in Table 1 should be achieved.

REFERENCES

1. Spicer, C. W., R. M. Riggin, M. W. Holdren, F. L. DeRoos, and R. N. Lee, Atmospheric Reaction Products from Hazardous Air Pollutants, Final Report on Contract 68-02-3169 (WA-33/40), U.S. Environmental Protection Agency, Research Triangle Park, N.C., July, 1984.

2. Method 219, "Phosgene in Air," Manual of Analytical Methods, National Institute for Occupational Safety and Health.

3. Annual Book of ASTM Standards, Part 11.03, "Atmospheric Analysis," American Society for Testing and Materials, Philadelphia, Pennsylvania, 1983.

4. Riggin, R. M., "Technical Assistance Document for Sampling and Analysis of Toxic Organic Compounds in Ambient Air," EPA-600/4-83-027. U.S. Environmental Protection Agency, Research Triangle Park, North Carolina, 1983.

5. "Method 6 Determination of SO_2 Emissions from Stationary Sources," Federal Register, Vol. 42., No. 160, August, 1977.

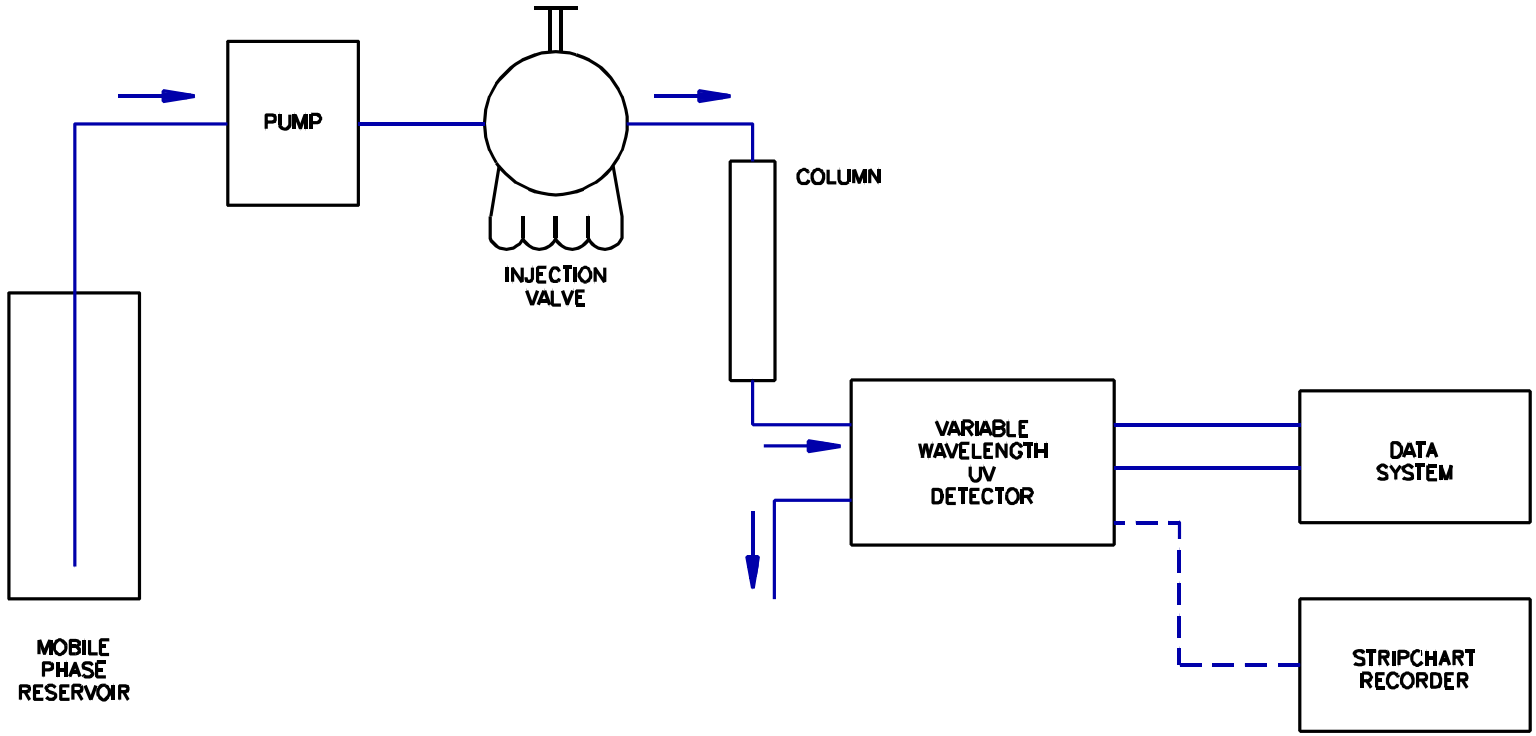

FIGURE 1. TYPICAL HPLC SYSTEM

TO6-16

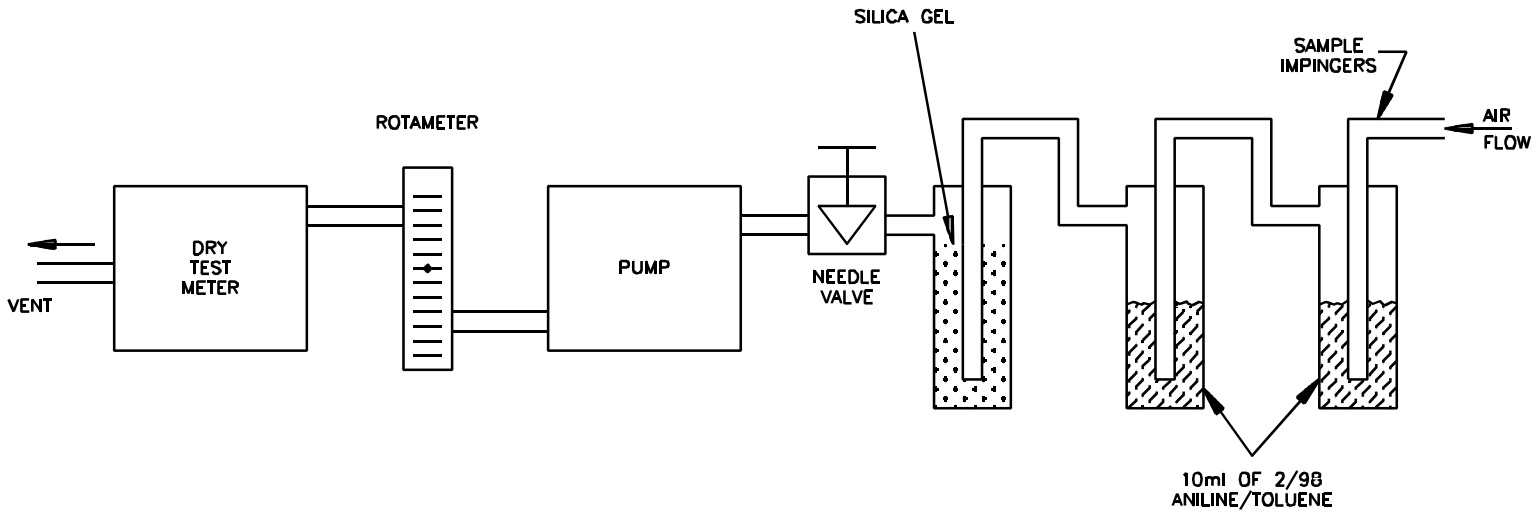

FIGURE 2. TYPICAL SAMPLING SYSTEM FOR MONITORING PHOSGENE IN AMBIENT AIR

TO6-18

SAMPLING DATA SHEET
(One Sample per Data Sheet)

PROJECT: _____ DATES(S) SAMPLED: _____

SITE: _____ TIME PERIOD SAMPLED: _____

LOCATION: _____ OPERATOR: _____

INSTRUMENT MODEL NO: _____ CALIBRATED BY: _____

PUMP SERIAL NO: _____

SAMPLING DATA

Sample Number: _____

Start Time: _____ Stop Time: _____

Time	Dry Gas Meter Reading	Rotameter Reading	Flow Rate, *Q mL/min	Ambient Temperature °C	Barometric Pressure, mm Hg	Relative Humidity, %	Comments
1.							
2.							
3.							
4.							
N.							

Total Volume Data**

V_m = (Final - Initial) Dry Gas Meter Reading, or = _____ L

$$\frac{Q_2 + Q_3 \ldots Q_N}{N} \times \frac{1}{1000 \times (Sampling\ Time\ in\ Mi}$$ = _____ L

* Flow rate from rotameter or soap bubble calibrator (specify which).
** Use data from dry gas meter if available.

FIGURE 3. TYPICAL SAMPLING DATA FORM

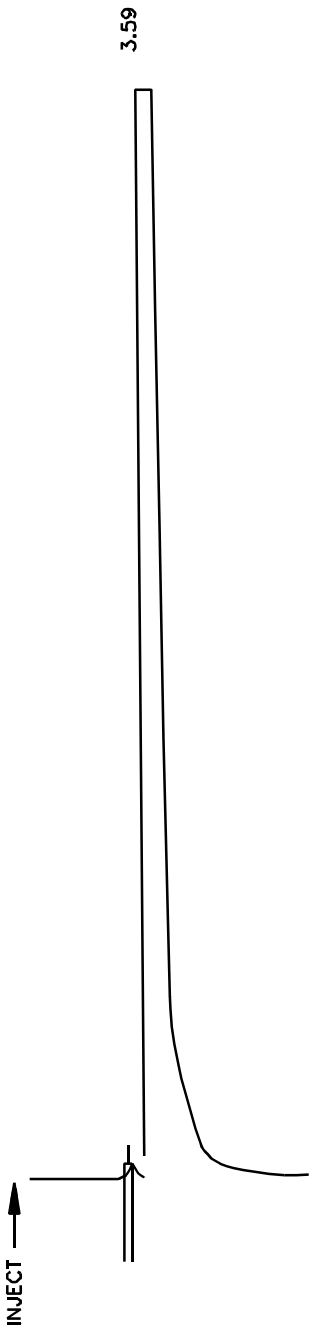

OPERATING PARAMETERS
HPLC

Column: C-18 RP
Mobile Phase: 30% Acetonitrile/70% Distilled Water
Detector: Ultra violet operating at 254 nm
Flow Rate: 1 ml/min
Retention Time: 3.59 minutes

AUG. 22, 1986 15.25:17 CHART 0.50 CM/MIN
RUN #50 CALC #0
COLUMN SOLVENT OPR ID: 3

EXTERNAL STANDARD QUANTITATION

PEAK#	AMOUNT	RT	EXP RT	AREA	RF
	2.75300	2.74		2753 L	0.000000E0
	10020.20000	3.59		10020345 L	0.000000E0
TOTAL	10023.00000				

FIGURE 4. CHROMATOGRAM FOR 3 ppbv OF PHOSGENE SPIKED INTO CLEAN AIR

T06-21

OPERATING PARAMETERS
HPLC

Column: C-18 RP
Mobile Phase: 30% Acetonitrile/70% Distilled Water
Detector: Ultra violet operating at 254 nm
Flow Rate: 1 ml/min
Retention Time: 3.59 minutes

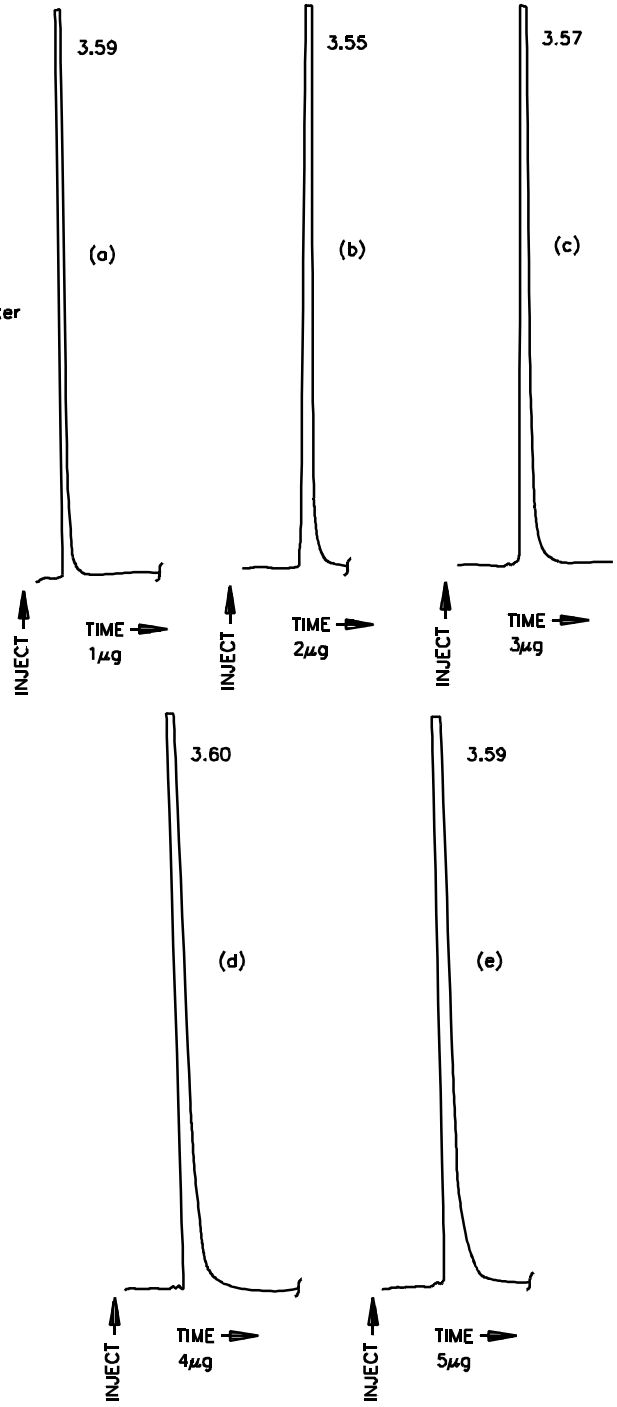

CONC	AREA COUNTS
1μg	2126577
2μg	4243289
3μg	6312128
4μg	8373790
5μg	10020345

FIGURE 5a–5e. HPLC CHROMATOGRAM OF VARYING CARBANILIDE CONCENTRATIONS

T06-23

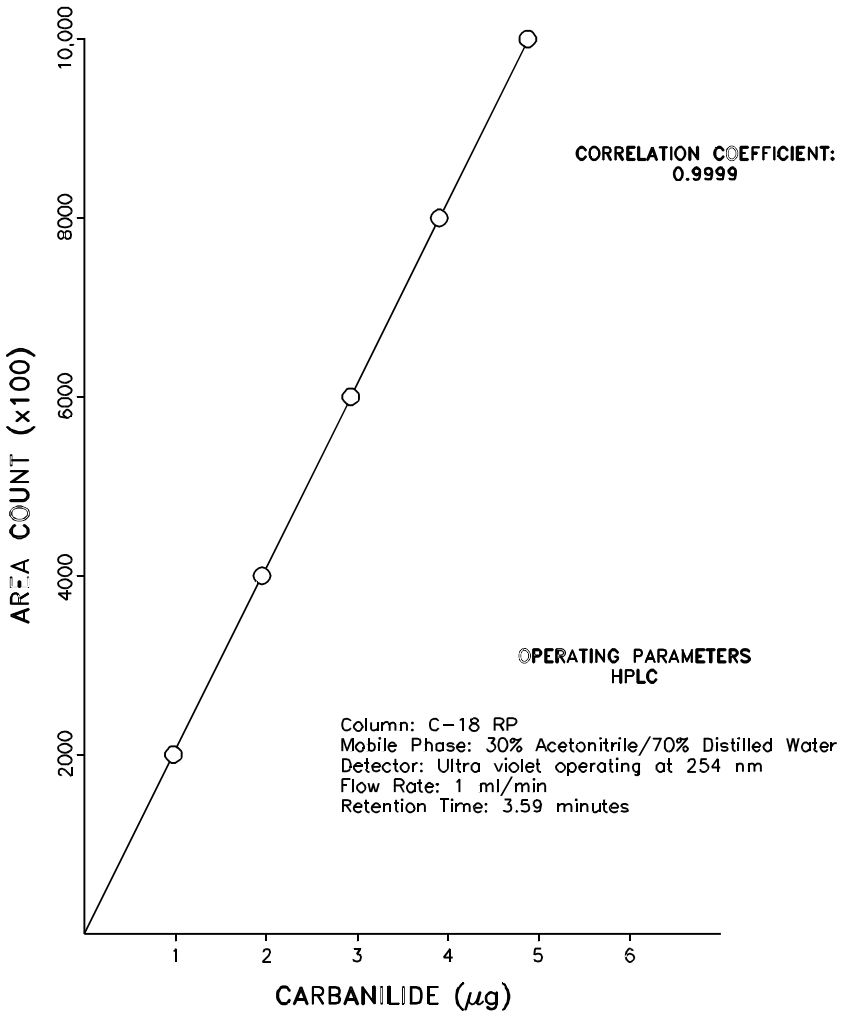

FIGURE 6. CALIBRATION CURVE FOR CARBANILINE

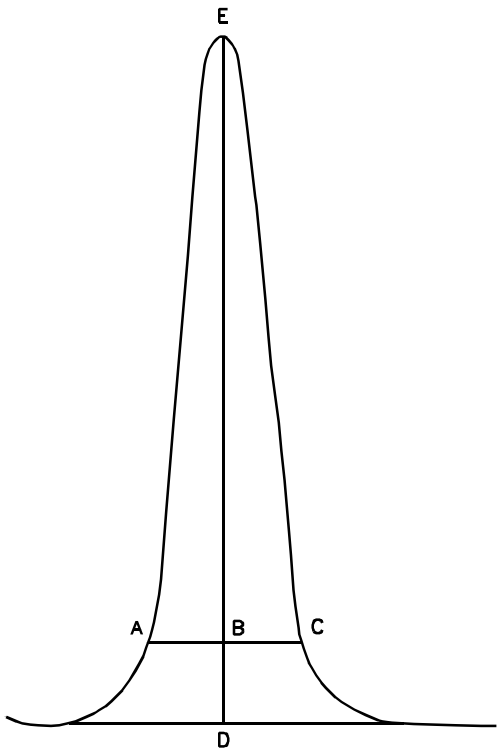

Asymmetry Factor = $\frac{BC}{AB}$

Example Calculation:

Peak Height = DE = 100mm
10% Peak Height = BD = 10mm
Peak Width at 10% Peak Height = AC = 23mm
AB = 11mm
BC = 12mm

Therefore: Asymmetry Factor = $\frac{12}{11}$ = 1.1

FIGURE 7. PEAK ASYMMETRY CALCULATION

TABLE 1: PRECISION AND RECOVERY DATA FOR PHOSGENE IN CLEAN AIR

Phosgene Concentration, ppbv	Recovery, %	Standard Deviation
0.034	63	13
0.22	87	14
3.0	99	3
4.3	109	12
20	99	14
200	96	7

Revision 1.0
September 1986

METHOD T0-7

METHOD FOR THE DETERMINATION OF N-NITROSODIMETHYLAMINE IN AMBIENT AIR USING GAS CHROMATROGRAPHY

1. Scope

1.1 This document describes a method for determination of N-nitrosodimethylamine (NDMA) in ambient air. Although the method, as described, employs gas chromatography/mass spectrometry (GC/MS), other detection systems are allowed.

1.2 Although additional documentation of the performance of this method is required, a detection limit of better than 1 ug/m^3 is achievable using GC/MS (1,2). Alternate, selective GC detection systems such as a thermal energy analyzer (2), a thermionic nitrogen-selective detector (3), or a Hall Electrolytic conductivity detector (4) may prove to more sensitive and selective in some instances.

2. Applicable Documents

2.1 ASTM Standards
D1356 Definitions of Terms Related to Atmospheric Sampling and Analysis (5)

2.2 Other Documents
Ambient air studies (1,2)
U.S. EPA Technical Assistance Document (6)

3. Summary of Method

3.1 Ambient air is drawn through a Thermosorb/N adsorbent cartridge at a rate of approximately 2 L per minute for an appropriate period of time. Breakthrough has been shown not to be a problem with total sampling volumes of 300 L (i.e., 150 minutes at 2 L per minute). The selection of Thermosorb/N absorbent over Tenax GC, was due, in part, to recent laboratory studies indicating artifact formation on Tenax from the presence of oxides of nitrogen in the sample matrix.

3.2 In the laboratory, the cartridges are pre-eluted with 5 mL of dichloromethane (in the same direction as sample flow) to remove interferences. Residual dichloromethane is removed by purging the

cartridges with air in the same direction. The cartridges are then eluted, in the reverse direction, with 2 mL of acetone. This eluate is collected in a screw-capped vial and refrigerated until analysis.

3.3 NDMA is determined by GC/MS using a Carbowax 20M capillary column. NDMA is quantified from the response of the m/e 74 molecular ion using an external standard calibration method.

4. Significance

4.1 Nitrosamines, including NDMA, are suspected human carcinogens. These compounds may be present in ambient air as a result of direct emission (e.g., from tire manufacturing) of from atmospheric reactions between secondary or tertiary amines and NO_x.

4.2 Several papers (1,2,4) have been published describing analytical approaches for NDMA determination. The purpose of this document is to combine the attractive features of these methods into one standardized method. At the present time, this method has not been validated in its final form, and, therefore, one must use caution when employing it for specific applications.

5. Definitions

Definitions used in this document and in any user-prepared SOPs should be consistent with ASTM D1356(5). All abbreviations and symbols are defined within this document at the point of use.

6. Interferences

Compounds having retention times similar to NDMA, and yielding detectable m/e 74 ion fragments, may interfere in the method. The inclusion of a pre-elution step in the sample desorption procedure minimizes the number of interferences. Alternative GC columns and conditions may be required to overcome interferences in unique situations.

7. Apparatus

7.1 GC/MS System - capable of temperature-programmed, fused-silica capillary column operation. Unit mass resolution or better to 300 amu. Capable of full scan and selected ion monitoring with a scan rate of 0.8 second/scan or better.

7.2 Sampling system - capable of accurately and precisely sampling 100-2000 mL/minute of ambient air. (See Figure 1.) The dry test meter may not be accurate at flows below 500 mL/minute; in such cases it should be replaced by recorded flow readings at the start, finish, and hourly during the collection. See Section 9.4.

7.3 Stopwatch.

7.4 Friction top metal can, e.g., one-gallon (paint can) - to hold clean cartridges and samples.

7.5 Thermometer - to record ambient temperature.

7.6 Barometer (optional).

7.7 Glass syringe - 5 mL with Luer® fitting.

7.8 Volumetric flasks - 2 mL, 10 ml, and 100 mL.

7.9 Glass syringe - 10 uL for GC injection.

8. Reagents and Materials

8.1 Thermosorb/N - Available from Thermedics Inc., 470 Wildwood St., P.O. Box 2999, Woburn, Mass., 01888-1799, or equivalent.

8.2 Dichloromethane - Pesticide quality, or equivalent.

8.3 Helium - Ultrapure compressed gas (99.9999%).

8.4 Perfluorotributylamine (FC-43) - for GC/MS calibration.

8.5 Chemical Standards - NDMA solutions. Available from various chemical supply houses. Caution: NDMA is a suspected human carcinogen. Handle in accordance with OSHA regulations.

8.6 Granular activated charcoal - for preventing contamination of cartridges during storage.

8.7 Glass jar, 4oz- to hold cartridges.

8.8 Glass vial - 1 dram, with Teflon® -lined screw cap.

8.9 Luer® fittings - to connect cartridges to sampling system.

8.10 Acetone - Reagent grade.

9. Sampling

9.1 Cartridges (Thermosorb/N) are purchased prepacked from Thermedics Inc. These cartridges are 1.5 cm ID x 2 cm long polyethylene tubes with Luer®-type fittings on each end. The adsorbent is held in place with 100-mesh stainless steel screens at each end. The cartridges are used as received and are discarded after use. At least one cartridge from each production lot should be used as a blank to check for contamination. The cartridges are stored in screw-capped glass jars (with Luer® style caps), and placed in a charcoal-containing metal can when not in use.

9.2 The sampling system may employ either a mass flow controller or a dry test meter. (See Figure 1.) For purposes of discussion, the following procedure assumes the use of a dry test meter.

9.3 Before sample collection, the entire assembly (including a "dummy" sampling cartridge) is installed and the flow rate is checked at a value near the desired rate. In general, flow rate of 100-2000 mL/minute should be employed. The flow rate should be adjusted so that no more than 300 L of air is collected over the desired sampling period. Generally, calibration is accomplished using a soap bubble flow meter or calibrated wet test meter connected to the flow exit, assuming the system is sealed. ASTM Method 3686 describes an appropriate calibration scheme not requiring a sealed flow system downstream of the pump.

9.4 Ideally, a dry gas meter is included in the system to record total flow. If a dry gas meter is not available, the operator must measure and record the sampling flow rate at the beginning and end of the sampling period to determine sample volume. If the sampling period exceeds two hours, the flow rate should be measured at intermediate points during the sampling period. Ideally, a rotameter should be included to allow observation of the flow rate without interruption of the sampling process.

9.5 To collect an air sample, a new Thermosorb/N cartridge is removed from the glass jar and connected to the sampling system using a Luer® adapter fitting. The glass jar is sealed for later use. The following parameters are recorded on the data sheet (see Figure 2 for an example): date, sampling location, time, ambient temperature, barometric pressure (if available), relative humidity (if available), dry gas meter reading (if appropriate), flow rate, rotameter setting, cartridge batch number, and dry gas meter and pump identification numbers.

9.6 The sampler is allowed to operate for the desired period, with periodic recording of the variables listed above. The total flow should not exceed 300 L.

9.7 At the end of the sampling period. the parameters listed in Section 9.5 are recorded and the sample flow is stopped. If a dry gas meter is not used, the flow rate must be checked at the end of the sampling interval. If the flow rates at the beginning and end of the sampling period differ by more than 15%, the sample should be marked as suspect.

9.8 Immediately after sampling, the cartridge is removed from the sampling system, capped, and placed back in the 4-oz glass jar. The jar is then capped, sealed with Teflon® tape, and placed in a friction-top can containing 1-2 inches of granular charcoal. The samples are stored in the can until analysis.

9.9 If a dry gas meter or equivalent total flow indicator is not used, the average sample flow rate must be calculated according to the following equation:

$$Q_A = \frac{Q_1 + Q_2 + \ldots Q_N}{N}$$

where

Q_A	=	average flow rate (mL/minute).
$Q_1, Q_2, \ldots . Q_N$	=	flow rates determined at beginning, end, and immediate points during sampling.
N	=	number of points averaged.

9.10 The total flow is then calculated using the following equation:

$$V_m = \frac{(T_2 - T_1) \times Q_A}{1000}$$

where

V_m	=	total sample volume (L) at measured temperature and pressure.
T_2	=	stop time.
T_1	=	start time.
T_2-T_1	=	sampling time (minutes).

9.11 The total volume (V_s) at standard conditions, 25°C and 760 mm Hg, is calculated from the following equation:

$$V_s = V_m \times \frac{P_A}{760} \times \frac{298}{273 + t_A}$$

where V_s = total sample volume (L) at standard conditions of 25°C and 760 mm Hg.

V_m = total sample volume (L) at measured temperature and pressure.

P_A = average barometric pressure (mm Hg).

t_A = average ambient temperature (°C).

10. Sample Desorption

10.1 Samples are returned to the laboratory and prepared for analysis within one week of collection.

10.2 Using a glass syringe, the samples are pre-eluted to remove potential interferences by passing 5 mL of dichloromethane through the cartridge, in the same direction as sample flow. This operation should be conducted over approximately a 2-minute period. Excess solvent is expelled by injecting 5 mL of air through the cartridge, again using the glass syringe.

10.3 The NDMA is then desorbed passing 2 mL of acetone through the cartridge, in the direction opposite to sample flow, using a glass syringe. A flow rate of approximately 0.5 mL\minute is employed and the eluate is collected in a 2-mL volumetric flask.

10.4 Desorption is halted once the volumetric flask is filled to the mark. The sample is then transferred to a 1-dram vial having a Teflon®-lined screw cap and refrigerated until analysis. The vial is wrapped with aluminum foil to prevent photolytic decomposition of the NDMA.

11. GC/MS Analysis

Although a variety of GC detectors can be used for NDMA determination, the following procedure assumes the use of GC/MS in the selected ion monitoring (SIM) mode.

11.1 Instrument Setup

11.1.1 Considerable variation in instrument configuration is expected from one laboratory to another. Therefore, each laboratory must be responsible for verifying that its particular system yields satisfactory results. The GC/MS system must be capable of accommodating a fused-silica capillary column, which can be inserted directly into the ion source. The system must be capable of acquiring the processing data in the selected ion monitoring mode.

11.1.2 Although alternative column systems can be used, a 0.2 mm I.D. x 50 m Carbowax 20M fused-silica column (Hewlett-Packard Part No. 19091-60150, or equivalent) is recommended. After installation, a helium carrier gas flow of 2 mL per minute is established and the column is conditioned at 250°C for 16 hours. The injector and GC/MS transfer line temperatures should also be set at 250°C.

11.1.3 The MS and data system are set up according to manufacturer's specifications. Electron impact ionization (70eV) should be employed. Once the entire GC/MS system is set up, it is calibrated as described in Section 11.2. The user should prepare a detailed standard operating procedure (SOP) describing this process for the particular instrument being used.

11.2 Instrument Calibration

11.2.1 Tuning and mass standardization of the MS system is performed according to manufacturer's instructions and relevant information from the user-prepared SOP. Perfluorotributylamine should generally be employed for this purpose. The material is introduced directly into the ion source through a molecular leak. The instrumental parameters (e.g., lens, voltages, resolution, etc.) should be adjusted to give the relative ion abundances shown in Table 1 as well as acceptable resolution and peak shape. If these approximate relative abundances cannot be achieved, the ion source may require cleaning according to manufacturer's instructions. In the event that the user's instrument cannot achieve these relative ion

abundances, but is otherwise operating properly, the user may adopt another set of relative abundances as performance criteria. However, these values must be repeatable on a day-to-day basis.

11.2.2 After the mass standardization and tuning process has been completed and the appropriate values entered into the data system, the user should set the SIM monitoring parameters (i.e., mass centroid and window to be monitored) by injecting a moderatley high level standard solution (100 ug/mL) of NDMA onto the GC/MS in the full scan mode. The scan range should be 40 to 200 amu at a rate of 0.5 to 0.8 scans/second. The nominal mass 42, 43, and 74 amu ions are to be used for SIM monitoring, with the 74 amu ion employed for NDMA quantification.

11.2.3 Before injection of NDMA standards, the GC oven temperature is stabilized at 45°C. The filament and electron multiplier voltage are turned off. A 2-uL aliquot of an appropriate NDMA standard, dissolved n acetone, is injected onto the GC/MS system using the splitless injection technique. Concentrated NDMA standards can be purchased from chemical supply houses. The standards are diluted to the appropriate concentration with acetone. CAUTION: NDMA is a suspected carcinogen and must be handled according to OSHA regulations. After five minutes, the electron multiplier and filament are turned on, data acquisition is initiated, and the oven temperature is programmed to 250°C at a rate of 16°C/minute. After elution of the NDMA peak from the GC/MS (Figure 3), the data acquisition process an be halted and data processing initiated.

11.2.4 Once the appropriate SIM parameters have been established, as described in Section 11.2.2, the instrument is calibrated by analyzing a range of NDMA standards using the SIM prodecure. If necessary, the electron multiplier voltage or amplifier gain can be adjusted to give the desired sensitivity for standards bracketing the range of interest. A calibration curve of m/e 74 ion intensity versus quantity of NDMA

injected is constructed and used to calculate NDMA concentration in the samples.

11.3 Sample Analysis

11.3.1 The sample analysis process is the same as that described in Section 11.2.3 for calibration standards. Samples should be handled so as to minimize exposure to light.

11.3.2 If a peak is observed for NDMA (within ±6 seconds of the expected retention time), the areas (integrated ion intensities) for m/e 42, 43, and 74 are calculated. The area of m/e 74 peak is used to calculate NDMA concentration. The ratios of m/e 42/74 and 43/74 ion intensities are used to determine the certainty of the NDMA identification. Ideally, these ratios should be within ±20% of the ratios for an NDMA standard in order to have confidence in the peak identification. Figure 4 illustrates the MS scan for N-nitrosodimethylamine.

12. Calculations

12.1 Calibration Response Factors

12.1.1 Data from calibration standards are used to calculate a response factor for NDMA. Ideally, the process involves analysis of at least three calibration levels of NDMA during a given day and determination of the response factor (area/ng injected) from the linear least squares fit of a plot of nanograms injected versus area (for the m/e 74 ion). In general, quantities of NDMA greater than 1000 nanograms should not be injected because of column overloading and/or MS response nonlinearity.

12.1.2 If substantial nonlinearity is present in the calibration curve, a nonlinear least squares fit (e.g., quadratic) should be employed. This process involves fitting the data to the following equation:

$$Y = A + BX + CX^2$$

where

Y = peak area

X = quantity of NDMA (ng)

A, B, and C are coefficients in the equation

12.2 NDMA Concentration

12.2.1 Analyte quantities on a sample cartridge are calculated from the following equation:

$$Y_A = A + BX_A + CX_A^2$$

where

Y_A is the area of the m/e 74 ion for the sample injection.

X_A is the calculated quantity of NDMA (ng) on the sample cartridge.

A, B, C are the coefficients calculated from the calibration curve described in Section 12.1.2.

12.2.2 If instrumental response is essentially linear over the concentration range of interest, a linear equation (C=O in the equation above) can be employed.

12.2.3 Concentration of analyte in the original air sample is calculated from the following equation:

$$C_A = \frac{X_A}{V_s}$$

where

C_A is the calculated concentration of analyte (ng/L).

V_s and X_A are as previously defined in Sections 9.11 and 12.2.1, respectively.

13. Performance Criteria and Quality Assurance

13.1 Standard Operating Procedures (SOPs).

13.1.1 User should generate SOPs describing the following activities in their laboratory: 1) assembly, calibration, and operation of the sampling system with make and model of equipment used; 2) preparation, purification, storage, and handling of Thermosorb/N cartridges and samples; 3) assembly, calibration, and operation of the GC/MS system with make and model of equipment used; and 4) all aspects of data recording and processing, including lists of computer hardware and software used.

13.1.2 SOPs should provide specific stepwise instructions and should be readily available to and understood by the laboratory personnel conducting the work.

13.2 Sample Collection

13.2.1 During each sampling event, at least one clean cartridge will accompany the samples to the field and back to the laboratory, having been placed in the sampler but without sampling air, to serve as a field blank. The average amount of material found on the field blank cartridges may be subtracted from the amount found on the actual samples. However, if the blank level is greater than 25% of the sample amount, data for that component must be identified as suspect.

13.2.2 During each sampling event, at least on set of parallel samples (two or more samples collected simultaneously) should be collected. If agreement between parallel samples is not generally within ±25%, the user should collect parallel samples on a much more frequent basis (perhaps for all sampling points).

13.2.3 Backup cartridges (two cartridges in series) should be collected with each sampling event. Backup cartridges should contain less than 10% of the amount of NDMA found in the front cartridges, or be equivalent to the blank cartridge level, whichever is greater.

13.2.4 NDMA recovery for spiked cartridges (using a solution-spiking technique) should be determined before initial use of the method on real samples. Currently available information indicates that a recovery of 75% or greater should be achieved.

13.3 GC/MS Analysis

13.3.1 Performance criteria for MS tuning and mass standardization are discussed in Section 11.2 and Table 1. Additional criteria can be used by the laboratory, if desired. The following section provide performance guidance and suggested criteria for determining the acceptability of the GC/MS system.

13.3.2 Chromatographic efficiency should be evaluated daily by the injection of NDMA calibration standards. The NDMA peak should be plotted on an expanded time scale so that its width at 10% of the peak height can be

calculated, as shown in Figure 5. The width of the peak at 10% height should not exceed 10 seconds. More stringent criteria may be required for certain applications. The asymmetry factor (see Figure 5) should be between 0.8 and 2.0.

13.3.3 The detection limit for NDMA is calculated from the data obtained for calibration standards. The detection limit is defined as

$$DL = A + 3.3S$$

where

DL is the calculated detection limit in nanograms injected.

A is the intercept calculated in Section 12.1.2.

S is the standard deviation of replicate determinations of the lowest-level standard (at least three such determinations are required). The lowest-level standard should yield a signal-to-noise ratio (from the total ion current response) of approximately 5.

13.3.4 Replicate GC/MS analysis of NDMA standards and/or sample extracts should be conducted on a daily basis. A precision of ±15% RSD or better should be achieved.

REFERENCES

(1) Marano, R. S., Updegrove, W. S., and Machem, R. C., "Determination of Trace Levels of Nitrosamines in Air by Gas Chromatography/Low Resolution Mass Spectrometry," Anal. Chem., 54, 1947-1951 (1982).

(2) Fine, D. H., et. al, "N-Nitrosodimethylamine in Air," Bull. Env. Cont. Toxicol., 15, 739-746 (1976).

(3) "EPA Method 607 - Nitrosamines," Federal Register, 49, 43313-43319, October 26, 1984.

(4) Anderson, R. J., "Nitrogen-Selective Detection in Gas Chromatography," Tracor Inc. Applications Note 79-3, Austin, Texas.

(5) Annual Book of ASTM Standards, Part 11.03, "Atmospheric Analysis," American Society for Testing and Materials, Philadelphia, Pennsylvania.

(6) Riggin, R. M., "Technical Assistance Document for Sampling and Analysis of Toxic Organic Compounds in Ambient Air," EPA-600/4-83-027, U.S. Environmental Protection Agency, Research Triangle Park, North Carolina, 1983.

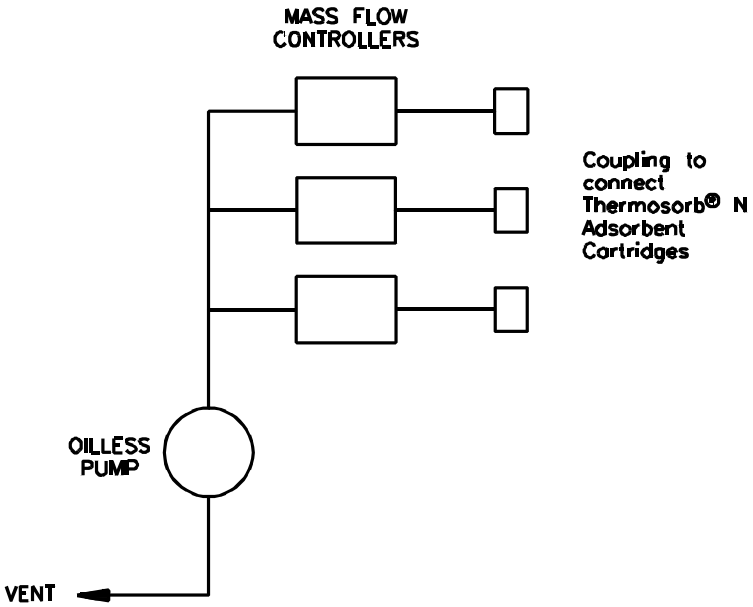

(a) MASS FLOW CONTROL

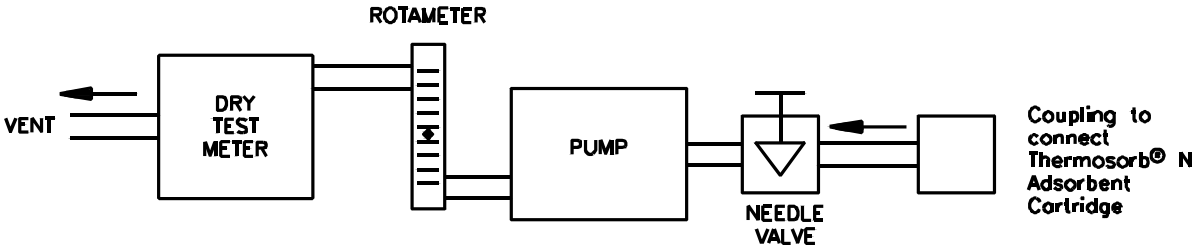

(DRY TEST METER SHOULD NOT BE USED
FOR FLOW OF LESS THAN 500 ml/minutes)

(b) NEEDLE VALVE/DRY TEST METER

FIGURE 1. TYPICAL SAMPLING SYSTEM CONFIGURATION

SAMPLING DATA SHEET
(One Sample per Data Sheet)

PROJECT: _____ DATES(S) SAMPLED: _____

SITE: _____ TIME PERIOD SAMPLED: _____

LOCATION: _____ OPERATOR: _____

INSTRUMENT MODEL NO: _____ CALIBRATED BY: _____

PUMP SERIAL NO: _____

SAMPLING DATA

Sample Number: _____

Start Time: _____ Stop Time: _____

Time	Dry Gas Meter Reading	Rotameter Reading	Flow Rate, *Q mL/min	Ambient Temperature °C	Barometric Pressure, mm Hg	Relative Humidity, %	Comments
1.							
2.							
3.							
4.							
N.							

Total Volume Data**

V_m = (Final - Initial) Dry Gas Meter Reading, or = _____ L

$$= \frac{Q_1 + Q_2 + Q_3 \ldots Q_N}{N} \times \frac{1}{1000 \times (\textit{Sampling Time in Minutes})}$$ = _____ L

* Flow rate from rotameter or soap bubble calibrator (specify which).
** Use data from dry gas meter if available.

FIGURE 2. EXAMPLE SAMPLING DATA SHEET

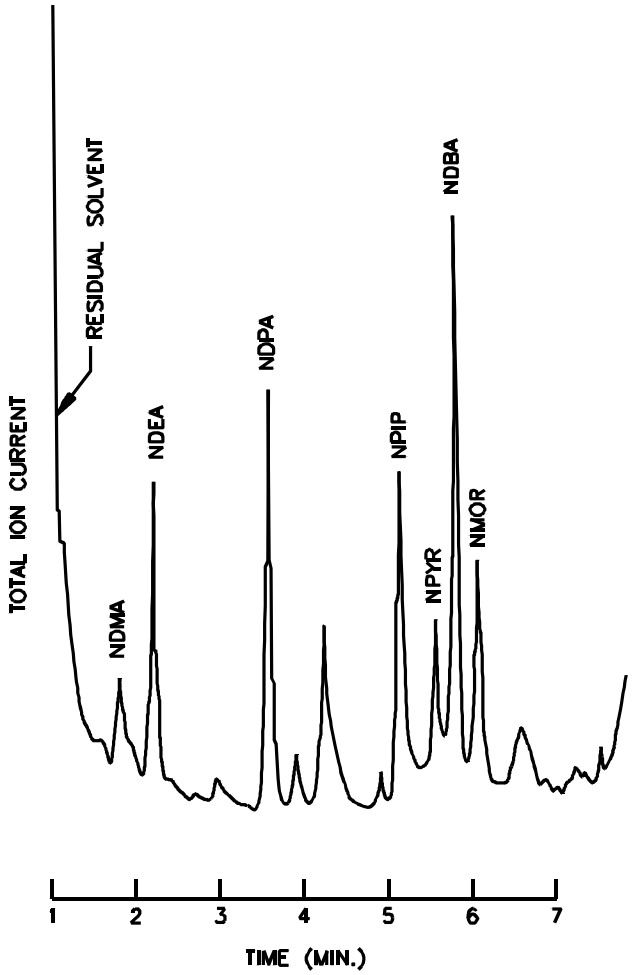

FIGURE 3. TOTAL ION CURRENT CHROMATOGRAM RESULTING FROM INJECTION OF 15 μL SAMPLE OF NDMA STANDARD (10 NG/μL IN ETHANOL).

$C_2H_6N_2O$

Methanamine, *N*-methyl-*N*-nitroso-

Me $_2$ NNO

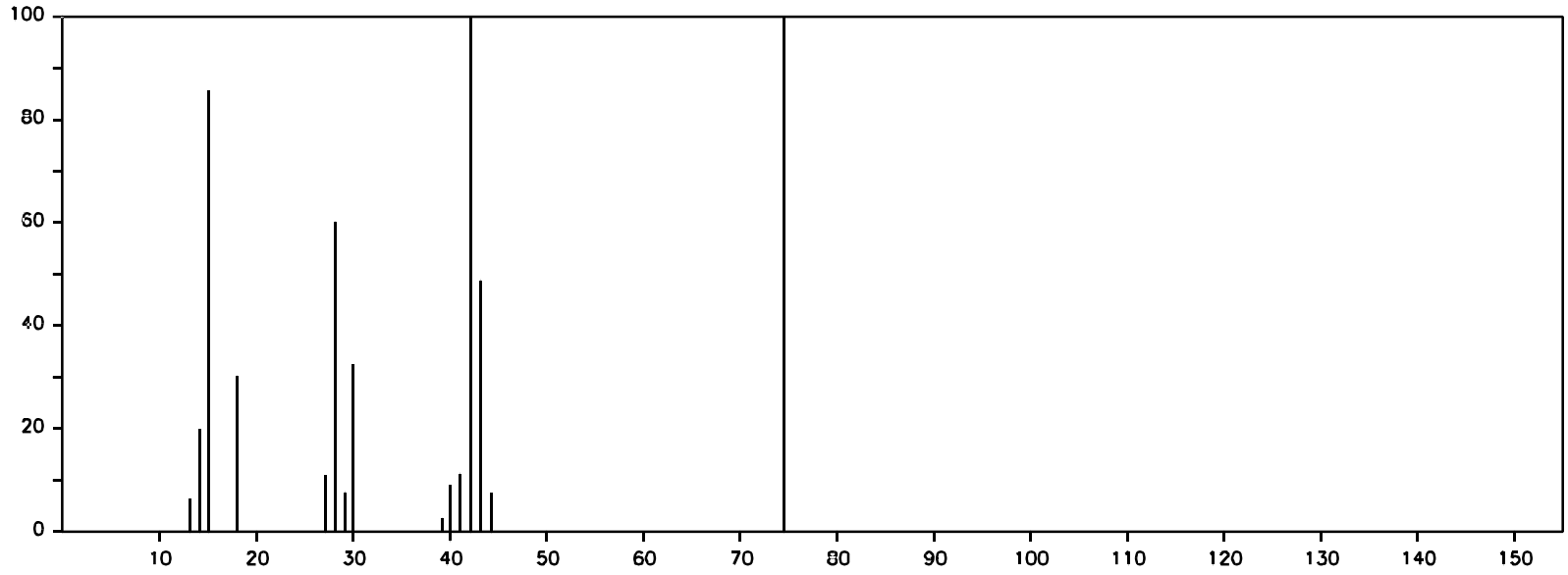

FIGURE 4. MASS SPECTROSCOPY SCAN (10 TO 150 AMV)
OF NDMA AT A RATE OF 0.5 TO 0.8 SCANS/SECOND

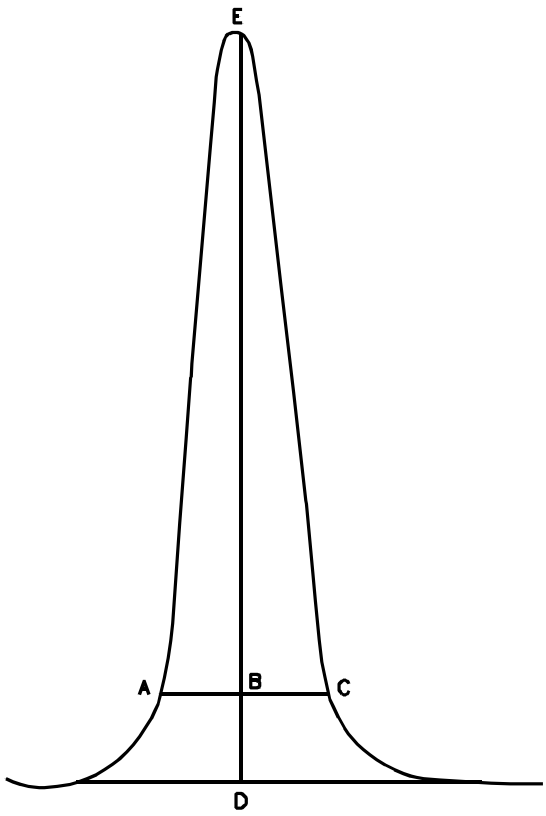

Asymmetry Factor $= \frac{BC}{AB}$

Example Calculation:

Peak Height = DE = 100mm

10% Peak Height = BD = 10mm

Peak Width at 10% Peak Height = AC = 23mm

AB = 11mm

BC = 12mm

Therefore: Asymmetry Factor $= \frac{12}{11} = 1.1$

FIGURE 5. PEAK ASYMMETRY CALCULATION

TABLE 1: SUGGESTED PERFORMANCE CRITERIA FOR RELATIVE ION ABUNDANCES FROM FC-43 MASS CALIBRATION

M/E	% Relative Abundance
51	1.8 ± 0.5
69	100
100	12.0 ± 1.5
119	12.0 ± 1.5
131	35.0 ± 3.5
169	3.0 ± 0.4
219	24.0 ± 2.5
264	3.7 ± 0.4
314	0.25 ± 0.1

Revision 1.0
September, 1986

METHOD TO-8

METHOD FOR THE DETERMINATION OF PHENOL AND METHYLPHENOLS (CRESOLS) IN AMBIENT AIR USING HIGH PERFORMANCE LIQUID CHROMATOGRAPHY

1. Scope

1.1 This document describes a method for determination of phenol and methylphenols (cresols) in ambient air. With careful attention to reagent purity and other factors, the method can detect these compounds at the 1-5 ppbv level.

1.2 The method as written has not been rigorously evaluated. The approach is a composite of several existing methods (1-3). The choice of HPLC detection system will be dependent on the requirements of the individual user. However, the UV detection procedure is considered to be most generally useful for relatively clean samples.

2. Applicable Documents

2.1 ASTM Standards
D1356 - Definitions of Terms Related to Atmospheric Sampling and Analysis(4).

2.2 Other Documents
U.S. EPA Technical Assistance Document (5).

3. Summary of Method

3.1 Ambient air is drawn through two midget impingers, each containing 15 mL of 0.1 N NaOH. The phenols are trapped as phenolates.

3.2 The impinger solutions are placed in a vial with a Teflon®- lined screw cap and returned to the laboratory for analysis. The solution is cooled in an ice bath and adjusted to pH <4 by addition of 1 mL of 5% v/v sulfuric acid. The sample is adjusted to a final volume of 25 mL with distilled water.

3.3 The phenols are determined using reverse-phase HPLC with either ultraviolet (UV) absorption detection at 274 nm, electrochemical detection, or fluorescence detection. In general, the UV detection approach should be used for relatively clean samples.

4. Significance

4.1 Phenols are emitted into the atmosphere from chemical operations and various combustion sources. Many of these compounds are acutely toxic, and their determination in ambient air is required in order to assess human health impacts.

4.2 Conventional methods for phenols have generally employed colorimetric or gas chromatographic techniques with relatively large detection limits. The method described here reduces the detection limit through use of HPLC.

5. Definitions

Definitions used in this document and in any user-prepared Standard Operating Procedures (SOPs) should be consistent with ASTM D1356 (5). All abbreviations and symbols are defined within this document at the point of use.

6. Interferences

6.1 Compounds having the same retention times as the compounds of interest will interfere in the method. Such interferences can often be overcome by altering the separation conditions (e.g., using alternative HPLC columns or mobile phase compositions) or detectors. Additionally, the phenolic compounds of interest in this method may be oxidized during sampling. Validation experiments may be required to show that the four target compounds are not substantially degraded.

6.2 If interferences are suspected in a "dirty" sample, preliminary cleanup steps may be required to identify interfering compounds by recording infrared spectrophotometry followed by specific ion-exchange column chromatography. Likewise, overlapping HPLC peaks may be resolved by increasing/decreasing component concentration of the mobile phase.

6.3 All reagents must be checked for contamination before use.

7. Apparatus

7.1 Isocratic HPLC system consisting of a mobile-phase reservoir, a high-pressure pump, an injection valve, a Zorbax ODS or C-18 reverse-phase column, or equivalent (25 cm x 4.6 mm lD), a variable-wavelength UV detector operating at 274 nm, and a data

system or strip-chart recorder (Figure l). Amperometric (electrochemical) or fluorescence detectors may also be employed.

7.2 Sampling system - capable of accurately and precisely sampling 100-1000 mL/minute of ambient air (Figure 2).

7.3 Stopwatch.

7.4 Friction-top metal can, e.g., one-gallon (paint can) - to hold samples.

7.5 Thermometer - to record ambient temperature.

7.6 Barometer (optional).

7.7 Analytical balance - 0.1 mg sensitivity.

7.8 Midget impingers - jet inlet type, 25-mL.

7.9 Suction filtration apparatus - for filtering HPLC mobile phase.

7.10 Volumetric flasks - 100 mL and 500 mL.

7.11 Pipettes - various sizes, 1-10 mL.

7.12 Helium purge line (optional) - for degassing HPLC mobile phase.

7.13 Erlenmeyer flask, 1 L - for preparing HPLC mobile phase.

7.14 Graduated cylinder, 1 L - for preparing HPLC mobile phase.

7.15 Microliter syringe, 100-250 uL - for HPLC injection.

8. Reagents and Materials

8.1 Bottles, 10 oz, glass, with Teflon®-lined screw cap - for storing sampling reagent.

8.2 Vials, 25 mL, with Teflon®-lined screw cap - for holding samples.

8.3 Disposable pipettes and bulbs.

8.4 Granular charcoal.

8.5 Methanol - distilled in glass or pesticide grade.

8.6 Sodium hydroxide - analytical reagent grade.

8.7 Sulfuric acid - analytical reagent grade.

8.8 Reagent water - purified by ion exchange and carbon filtration, or distillation.

8.9 Polyester filters, 0.22 um - Nuclepore, or equivalent.

8.10 Phenol, 2-methyl-, 3-methyl-, and 4-methylphenol - neat standards (99+ % purity) for instrument calibration.

8.11 Sampling reagent, 0.1 N NaOH. Dissolve 4.0 grams of NaOH in reagent water and dilute to a final volume of 1L. Store in a glass bottle with Teflon®-lined cap.

8.12 Sulfuric acid, 5% v/v. Slowly add 5 mL of concentrated sulfuric acid to 9S mL of reagent water.

8.13 Acetate buffer, 0.1M, pH 4.8 - Dissolve 5.8 mL of glacial acetic acid and 13.6 grams of sodium acetate trihydrate in 1 L of reagent water.

8.14 Acetonitrile - spectroscopic grade.

8.15 Glacial acetic acid - analytical reagent grade.

8.16 Sodium acetate trihydrate - analytical reagent grade.

9. Sampling

9.1 The sampling apparatus is assembled and should be similar to that shown in Figure 2. EPA Federal Reference Method 6 uses essentially the same sampling system (6). All glassware (e.g., impingers, sampling bottles, etc.) must be thoroughly rinsed with methanol and oven-dried before use.

9.2 Before sample collection, the entire assembly (including empty sample impingers) is installed and the flow rate checked at a value near the desired rate. ln general, flow rates of 100-1000 mL/minute are useful. Flow rates greater than 1000 mL/minute should not be used because impinger collection efficiency may decrease. Generally, calibration is accomplished using a soap bubble flow meter or calibrated wet test meter connected to the flow exit, assuming the entire system is sealed. ASTM Method D3686 describes an appropriate calibration scheme that does not require a sealed-flow system downstream of the pump (4).

9.3 Ideally, a dry gas meter is included in the system to record total flow, if the flow rate is sufficient for its use. lf a dry gas meter is not available, the operator must measure and record the sampling flow rate at the beginning and end of the sampling period to determine sample volume. If the sampling time exceeds two hours, the flow rate should be measured at intermediate points during the sampling period. Ideally, a rotameter should be included to allow observation of the flow rate without interruption of the sampling process.

9.4 To collect an air sample, two clean midget impingers are loaded with 15 mL of 0.1 N NaOH each and sample flow is started. The following parameters are recorded on the data sheet (see Figure 3 for an example): date, sampling location, time, ambient temperature, barometric pressure (if available), relative humidity (if available), dry gas meter reading (if appropriate), flow rate, rotameter setting, 0.1 N NaOH reagent batch number, and dry gas meter and pump identification numbers.

9.5 The sampler is allowed to operate for the desired period, with periodic recording of the variables listed above. The total volume should not exceed 80 L. The operator must ensure that at least 5 mL of reagent remains in the impinger at the end of the sampling interval. (Note: for high ambient temperatures, lower sampling volumes may be required.)

9.6 At the end of the sampling period, the parameters listed in Section 9.4 are recorded and the sample flow is stopped. If a dry gas meter is not used, the flow rate must be checked at the end of the sampling interval. If the flow rates at the beginning and end of the sampling period differ by more than 15%, the sample should be discarded.

9.7 Immediately after sampling, the impinger is removed from the sampling system. The contents of the impinger are emptied into a clean 25-mL glass vial with a Teflon®-lined screw-cap. The impinger is then rinsed with 5 mL of reagent water and the rinse solution is added to the vial. The vial is then capped, sealed with Teflon® tape, and placed in a friction-top can containing 1-2 inches of granular charcoal. The samples are stored in the can and refrigerated until analysis. No degradation has been observed if the time between refrigeration and analysis is less than 48 hours.

9.8 If a dry gas meter or equivalent total flow indicator is not used, the average sample flow rate must be calculated according to the following equation:

$$Q_A = \frac{Q_1 + Q_2 + \ldots Q_N}{N}$$

where

Q_A	=	average flow rate (mL/minute).
Q_1, Q_2,----Q_N	=	flow rates determined at beginning, end, and intermediate points during sampling.
N	=	number of points averaged.

9.9 The total flow is then calculated using the following equation:

$$V_m = \frac{(T_2 - T_1) \times Q_A}{1000}$$

where

V_m	=	total volume (L) sampled at measured temperature and pressure.
T_2	=	stop time.
T_1	=	start time.
T_2-T_1	=	total sampling time (minutes).
Q_A	=	average flow rate (ml/minute).

9.10 The volume of air sampled is often reported uncorrected for atmospheric conditions (i.e., under ambient conditions). However, the value should be adjusted to standard conditions (25°C and 760 mm pressure) using the following equation:

$$V_s = V_m \times \frac{P_A}{760} \times \frac{298}{273 + T_A}$$

where

V_s	=	total sample volume (L) at 25°C and 760 mm Hg pressure.
V_m	=	total sample volume (L) under ambient conditions. Calculated as in Section 9.9 or from dry gas meter reading.
P_A	=	ambient pressure (mm Hg).
T_A	=	ambient temperature (°C).

10. Sample Analysis

10.1 Sample Preparation

10.1.1 The samples are returned to the laboratory in 25-mL screw-capped vials. The contents of each vial are transferred to a 25-mL volumetric flask. A 1-mL volume of 5% sulfuric acid is added and the final volume is adjusted to 25 mL with reagent water.

10.1.2 The solution is thoroughly mixed and then placed in a 25-ml screw-capped vial for storage (refrigerated) until HPLC analysis.

10.2 HPLC Analysis

10.2.1 The HPLC system is assembled and calibrated as described in Section 11. The operating parameters are as follows:

Column: C-18 RP

Mobile Phase: 30% acetonitrile/70% acetate buffer solution

Detector: ultraviolet, operating at 274 nm

Flow Rate: 0.3 mL/minute

Retention Time:

phenol – 9.4 minutes
o-cresol – 12.5 minutes
m-cresol – 11.5 minutes
p-cresol – 11.9 minutes
} Individual

phenol – 9.4 minutes
o-cresol – 12.8 minutes
m/p-cresol – 11.9 minutes
} Combined

Before each analysis, the detector baseline is checked to ensure stable operation.

10.2.2 A 100-uL aliquot of the sample is drawn into a clean HPLC injection syringe. The sample injection loop (50 uL) is loaded and an injection is made. The data system, if available, is activated simultaneously with the injection and the point of injection is marked on the strip-chart recorder.

10.2.3 After approximately one minute, the injection valve is returned to the "load" position and the syringe and valve are flushed with water in preparation for the next sample analysis.

10.2.4 After elusion of the last component of interest, data acquisition is terminated and the component concentrations are calculated as described in Section 12.

10.2.5 Phenols have been successfully separated from cresols utilizing HPLC with the above operating parameters. However, meta- and para-cresols have not been successfully separated. Figure 4 illustrates a typical chromatogram.

10.2.6 After a stable baseline is achieved, the system can be used for further sample analyses as described above.

10.2.7 If the concentration of analyte exceeds the linear range of the instrument, the sample should be diluted with mobile phase, or a smaller volume can be injected into the HPLC.

10.2.8 If the retention time is not duplicated, as determined by the calibration curve, you may increase or decrease the acetonitrile/water ratio to obtain the correct elution time, as specified in Figure 4. If the elution time is long, increase the ratio; if it is too short, decrease the ratio.

11.0 HPLC Assembly and Calibration

11.1 The HPLC system is assembled and operated according to Section 10.2.1.

11.2 The HPLC mobile phase is prepared by mixing 300 mL of acetonitrile and 750 mL of acetate buffer, pH 4.8. This mixture is filtered through a 0.22-um polyester membrane filter in an all-glass and Teflon® suction filtration apparatus. The filtered mobile phase is degassed by purging with helium for 10-15 minutes (100 mL/minute) or by heating to 60°C for 5-10 minutes in an Erlenmeyer flask covered with a watch glass. A constant back pressure restrict or (50 psi) or short length (6-12 inches) of 0.01-inch I.D. Teflon® tubing should be placed after the detector to eliminate further mobile phase outgassing.

11.3 The mobile phase is placed in the HPLC solvent reservoir and the pump is set at a flow rate of 0.3 mL/minute and allowed to pump for 20-30 minutes before the first analysis. The detector is switched on at least 30 minutes before the first analysis and the detector output is displayed on a strip-chart recorder or similar output device. UV detection at 274 nm is generally preferred. Alternatively, fluorescence detection with 274-nm excitation at 298-nm emission (2), or electrochemical detection at 0.9 volts (glassy carbon electrode versus Ag/AgCl) (3) may be used. Once a stable baseline is achieved, the system is ready for calibration.

11.4 Calibration standards are prepared in HPLC mobile phase from the neat materials. Individual stock solutions of 100 mg/L are prepared by dissolving 10 mg of solid derivative in 100 mL of mobile phase. These individual solutions are used to prepare calibration standards containing all of the phenols and cresols of interest at concentrations spanning the range of interest.

11.5 Each calibration standard (at least five levels) is analyzed three times and area response is tabulated against mass injected. Figures 5a through 5e illustrate HPLC response to various phenol concentrations (1 mL/minute flow rate). All calibration runs are performed as described for sample analyses in Section 10. Using the UV detector, a linear response range of approximately 0.05 to 10 mg/L should be achieved for 50-uL injection volumes. The results may be used to prepare a calibration curve, as illustrated in Figure 6 for phenols. Linear response is indicated where a correlation coefficient of at least 0.999 for a linear least-squares fit of the data (concentration versus area response) is obtained. The retention times for each analyze should agree within 2%.

11.6 Once linear response has been documented, an intermediate concentration standard near the anticipated levels for each component, but at least 10 times the detection limit, should be chosen for daily calibration. The response for the various components should be within 10% day to day. If greater variability is observed, recalibration may be required or a new calibration curve must be developed from fresh standards.

11.7 The response for each component in the daily calibration standard is used to calculate a response factor according to the following equation:

$$RF_c = \frac{C_c \times V_I}{R_c}$$

where

RF_c	=	response factor (usually area counts) for the component of interest in nanograms injected/ response unit.
Cc	=	concentration (mg/L) of analyte in the daily calibration standard.
VI	=	volume (uL) of calibration standard injected.
Rc	=	response (area counts) for analyte in the calibration standard.

12. Calculations

12.1 The concentration of each compound is calculated for each sample using the following equation:

$$W_d = RF_c \; X \; R_d \; X \; \frac{V_E}{V_I} \; X \; \frac{V_D}{V_A}$$

where

W_d	=	total quantity of analyze (ug) in the sample.
RF_c	=	response factor calculated in Section 11.6.
R_d	=	response (area counts or other response units) for analyte in sample extract.
V_E	=	final volume (ml) of sample extract.
V_I	=	volume of extract (uL) injected onto the HPLC system.
V_D	=	redilution volume (if sample was rediluted).
V_A	=	aliquot used for redilution (if sample was rediluted).

12.2 The concentration of analyte in the original sample is calculated from the following equation:

$$C_A = \frac{. \; W_d}{V_m \; (or \; V_s)} \times 1000$$

where

C_A	=	concentration of analyte (ng/L) in the original sample.
W_d	=	total quantity of analyte (ug) in sample.
V_m	=	total sample volume (L) under ambient conditions.
V_s	=	total sample volume (L) at 25°C and 760 mm Hg.

12.3 The analyte concentrations can be converted to ppbv using the following equation:

$$C_A \; (ppbv) = C_A \; (ng/L) \times \frac{24.4}{MW_A}$$

where

C_A (ng/L) is calculated using V_s.

MW_A = molecular weight of analyte.

13. Performance Criteria and Quality Assurance

This section summarizes required quality assurance (QA) measures and provides guidance concerning performance criteria that should be achieved within each laboratory.

13.1 Standard Operating Procedures (SOPs).

13.1.1 Users should generate SOPs describing the following activities in their laboratory: (1) assembly, calibration, and operation of the sampling system, with make and model of equipment used; (2) preparation, purification, storage, and handling of sampling reagent and samples; (3) assembly, calibration, and operation of the HPLC system, with make and model of equipment used; and (4) all aspects of data recording and processing, including lists of computer hardware and software used.

13.1.2 SOPs should provide specific stepwise instructions and should be readily available to and understood by the laboratory personnel conducting the work.

13.2 HPLC System Performance

13.2.1 The general appearance of the HPLC chromatogram should be similar to that illustrated in Figure 4.

13.2.2 The HPLC system efficiency and peak asymmetry factor should be determined in the following manner: A solution of phenol corresponding to at least 20 times the detection limit should be injected with the recorder chart sensitivity and speed set to yield a peak approximately 75% of full scale and 1 cm wide at half height. The peak asymmetry factor is determined as shown in Figure 7, and should be between 0.8 and 1.8.

13.2.3 HPLC system efficiency is calculated according to the following equation:

$$N = 5.54 \left(\frac{t_r}{W_{1/2}} \right)^2$$

where

N = column efficiency (theoretical plates).

t_r = retention time (seconds) of analyte.

$W_{1/2}$ = width of component peak at half height (seconds).

A column efficiency of >5,000 theoretical plates should be obtained.

13.2.4 Precision of response for replicate HPLC injections should be ±10% or less, day to day, for calibration standards. Precision of retention times should be ±2%, on a given day.

13.3 Process Blanks

13.3.1 Before use, a 15-mL aliquot of each batch of 0.1 N NaOH reagent should be analyzed as described in Section 10. In general, analyte levels equivalent to <5 ng/L in an 80-L sample should be achieved.

13.3.2 At least one field blank, or 10% of the field samples, whichever is larger, should be shipped and analyzed with each group of samples. The number of samples within a group and/or time frame should be recorded so that a specified percentage of blanks is obtained for a given number of field samples. The field blank is treated identically to the samples except that no air is drawn through the reagent. The same performance criteria described in Section 13.3.1 should be met for process blanks.

13.4 Method Precision and Accuracy

13.4.1 At least one duplicate sample, or 10% of the field samples, whichever is larger, should be collected during each sampling episode. Precision for field replication should be ±20% or better.

13.4.2 Precision for replicate HPLC injections should be ±10% or better, day to day, for calibration standards.

13.4.3 At least one spiked sample, or 10% of the field samples, whichever is larger, should be collected. The impinger solution is spiked with a known quantity of the compound of interest, prepared as a dilute water solution. A recovery of >80% should be achieved routinely.

13.4.4 Before initial use of the method, each laboratory should generate triplicate spiked samples at a minimum of three concentration levels, bracketing the range of interest for each compound. Triplicate nonspiked samples must also be processed. Spike recoveries of >80 ±10% and blank levels of <5 ng/L (using an 80-L sampling volume) should be achieved.

REFERENCES

(1) NIOSH P & CAM Method S330-1, "Phenol," National Institute of Occupational Safety and Health, Methods Manual, Vol. 3, 1978.

(2) Ogan, K. and, Katz, E., "Liquid Chromatographic Separation of Alkylphenols with Fluorescence and Ultraviolet Detection," Anal. Chem., 53, 160-163 (1981).

(3) Shoup, R. E., and Mayer, G. S., "Determination of Environmental Phenols by Liquid Chromatography Electrochemistry," Anal. Chem., 54, 1164-1169 (1982).

(4) Annual Book of ASTM Standards, Part 11.03, "Atmospheric Analysis," American Society for Testing and Materials, Philadelphia, Pennsylvania, 1983.

(5) Riggin, R. M., "Technical Assistance Document for Sampling and Analysis of Toxic Organic Compounds in Ambient Air," EPA-600/4-83-027, U.S. Environmental Protection Agency, Research Triangle Park, North Carolina, 1983.

(6) "Method 6 Determination of SO_2 Emissions from Stationary Sources," Federal Register, Vol. 42., No. 160, August, 1977.

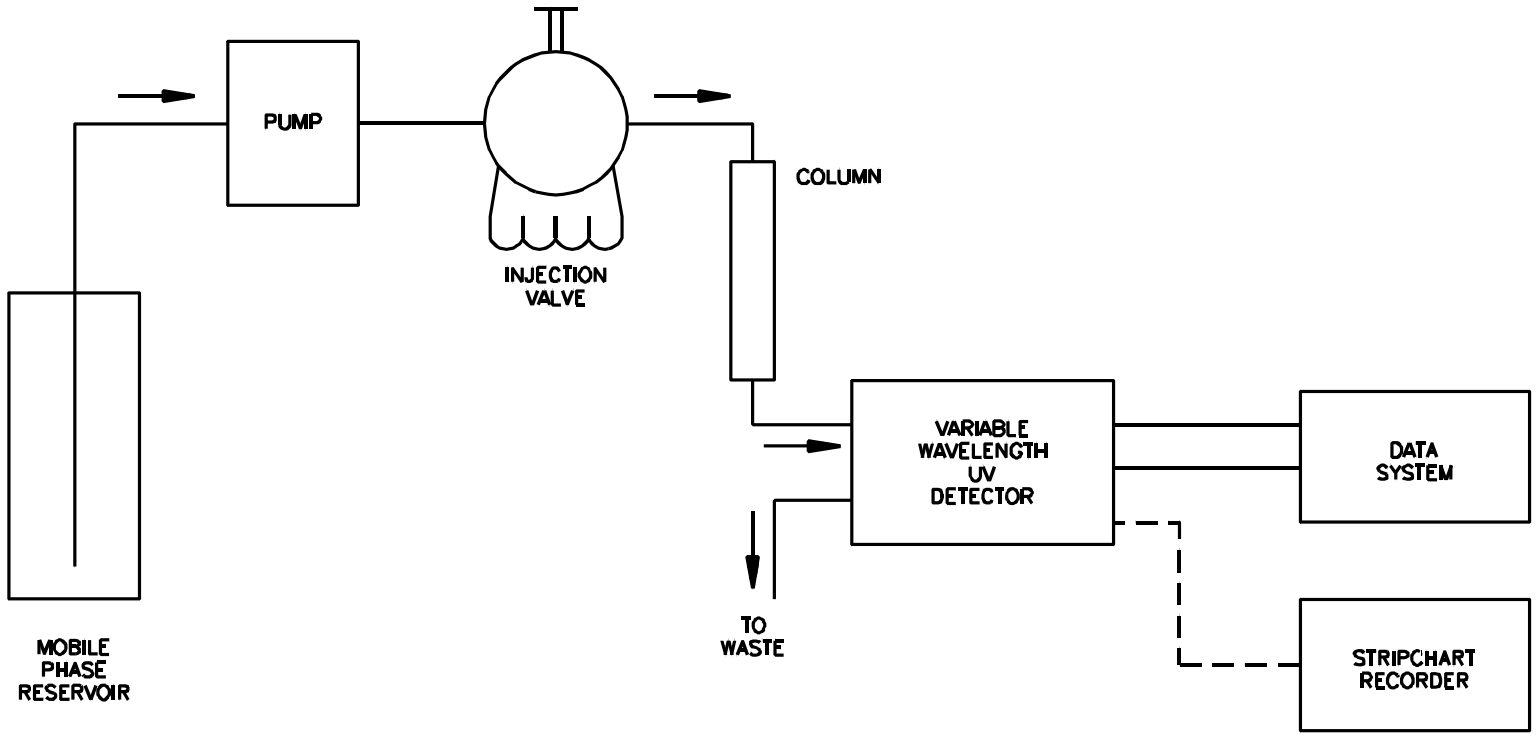

FIGURE 1. TYPICAL HPLC SYSTEM

T08-15

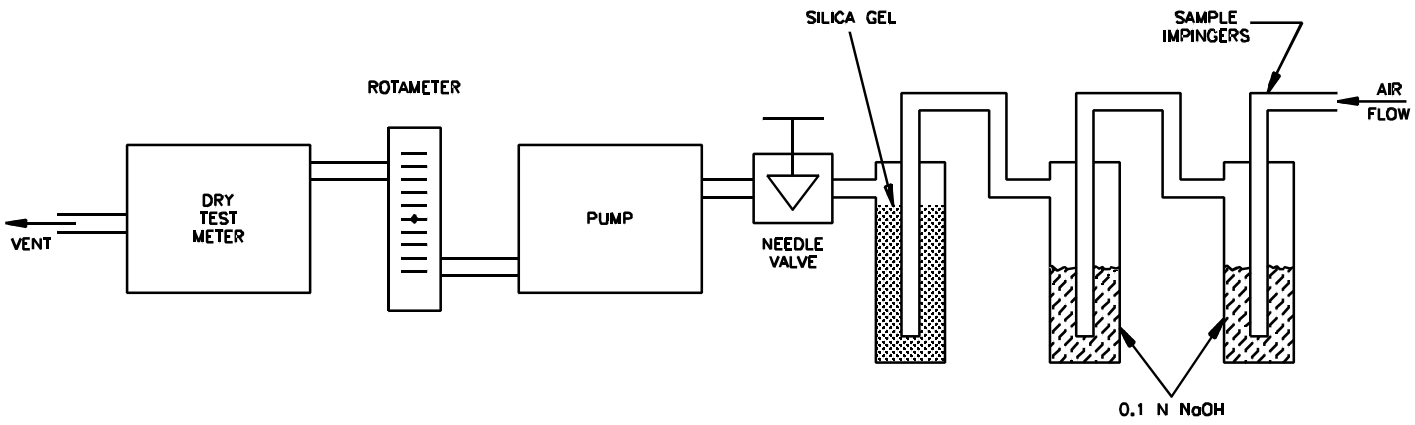

FIGURE 2. TYPICAL SAMPLING SYSTEM FOR MONITORING PHENOLS/CRESOLS IN AMBIENT AIR

SAMPLING DATA SHEET
(One Sample per Data Sheet)

PROJECT: _____ DATES(S) SAMPLED: _____

SITE: _____ TIME PERIOD SAMPLED: _____

LOCATION: _____ OPERATOR: _____

INSTRUMENT MODEL NO: _____ CALIBRATED BY: _____

PUMP SERIAL NO: _____

SAMPLING DATA

Sample Number: _____

Start Time: _____ Stop Time: _____

Time	Dry Gas Meter Reading	Rotameter Reading	Flow Rate, *Q mL/min	Ambient Temperature °C	Barometric Pressure, mm Hg	Relative Humidity, %	Comments
1.							
2.							
3.							
4.							
N.							

Total Volume Data**

V_m = (Final - Initial) Dry Gas Meter Reading, or = _____ L

$$= \frac{Q_1 + Q_2 + Q_3 \ldots Q_N}{N} \times \frac{1}{1000 \times (\textit{Sampling Time in Minutes})}$$ = _____ L

* Flow rate from rotameter or soap bubble calibrator (specify which).
** Use data from dry gas meter if available.

FIGURE 3. EXAMPLE SAMPLING DATA SHEET

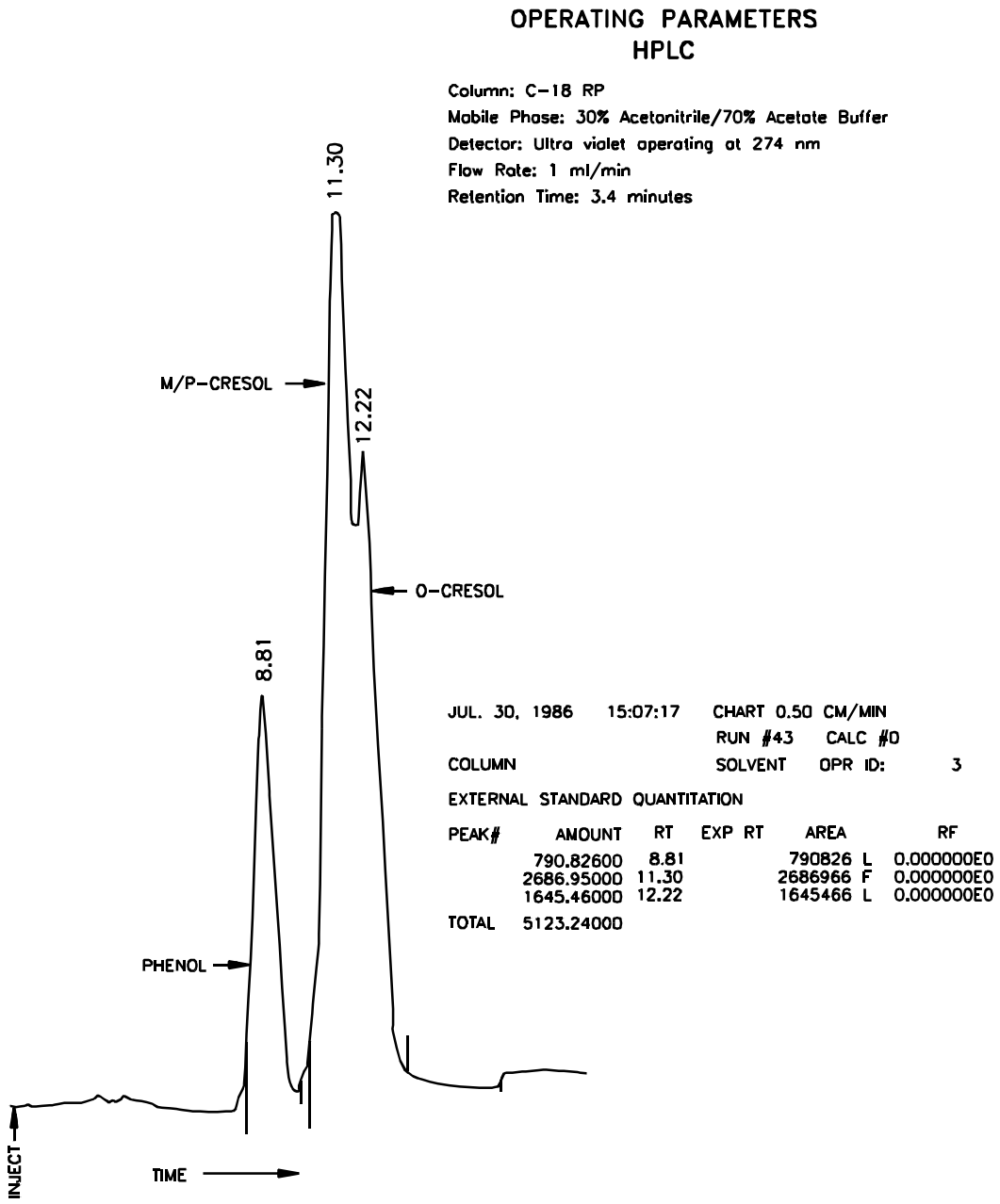

FIGURE 4. TYPICAL CHROMATOGRAM ILLUSTRATING SEPARATION OF PHENOLS/CRESOLS BY HPLC

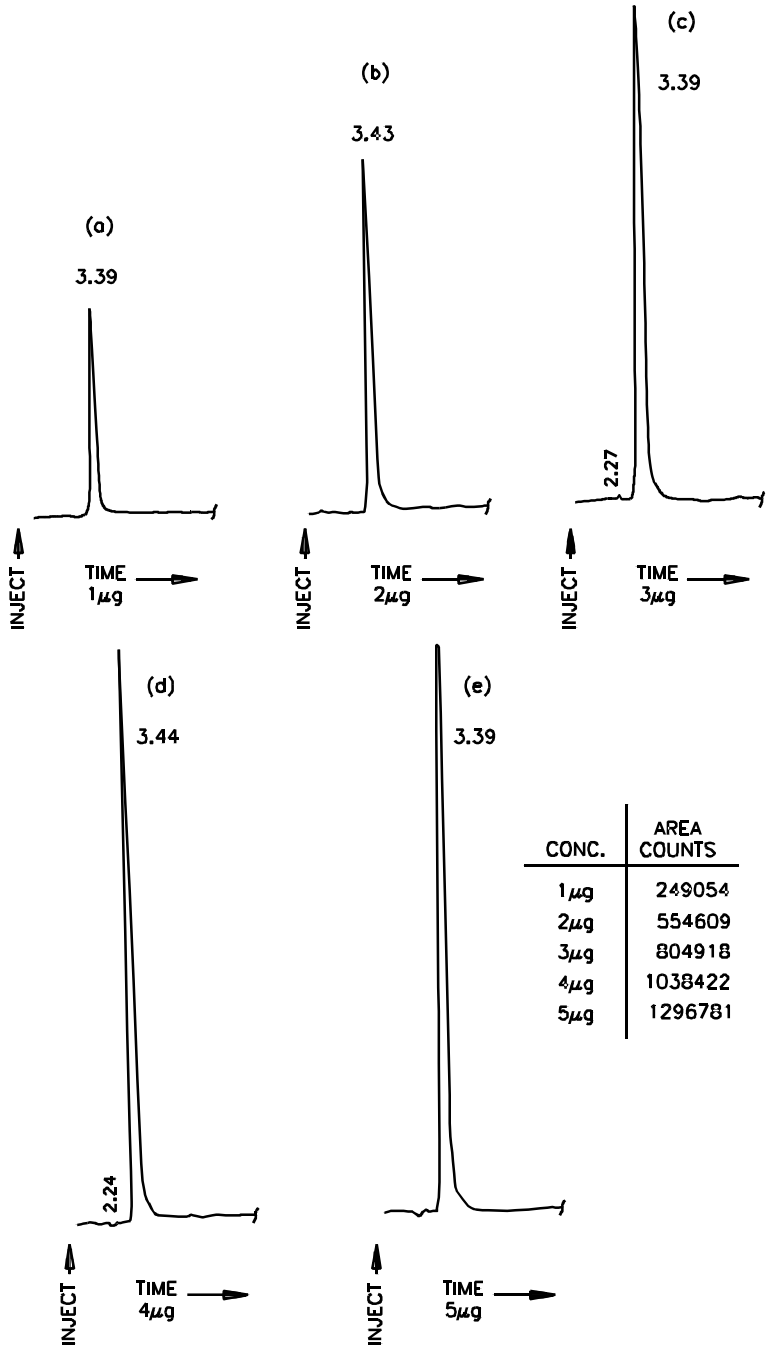

CONC.	AREA COUNTS
1μg	249054
2μg	554609
3μg	804918
4μg	1038422
5μg	1296781

FIGURE 5a–5e. HPLC CHROMATOGRAM OF VARYING PHENOL CONCENTRATIONS

T08-21

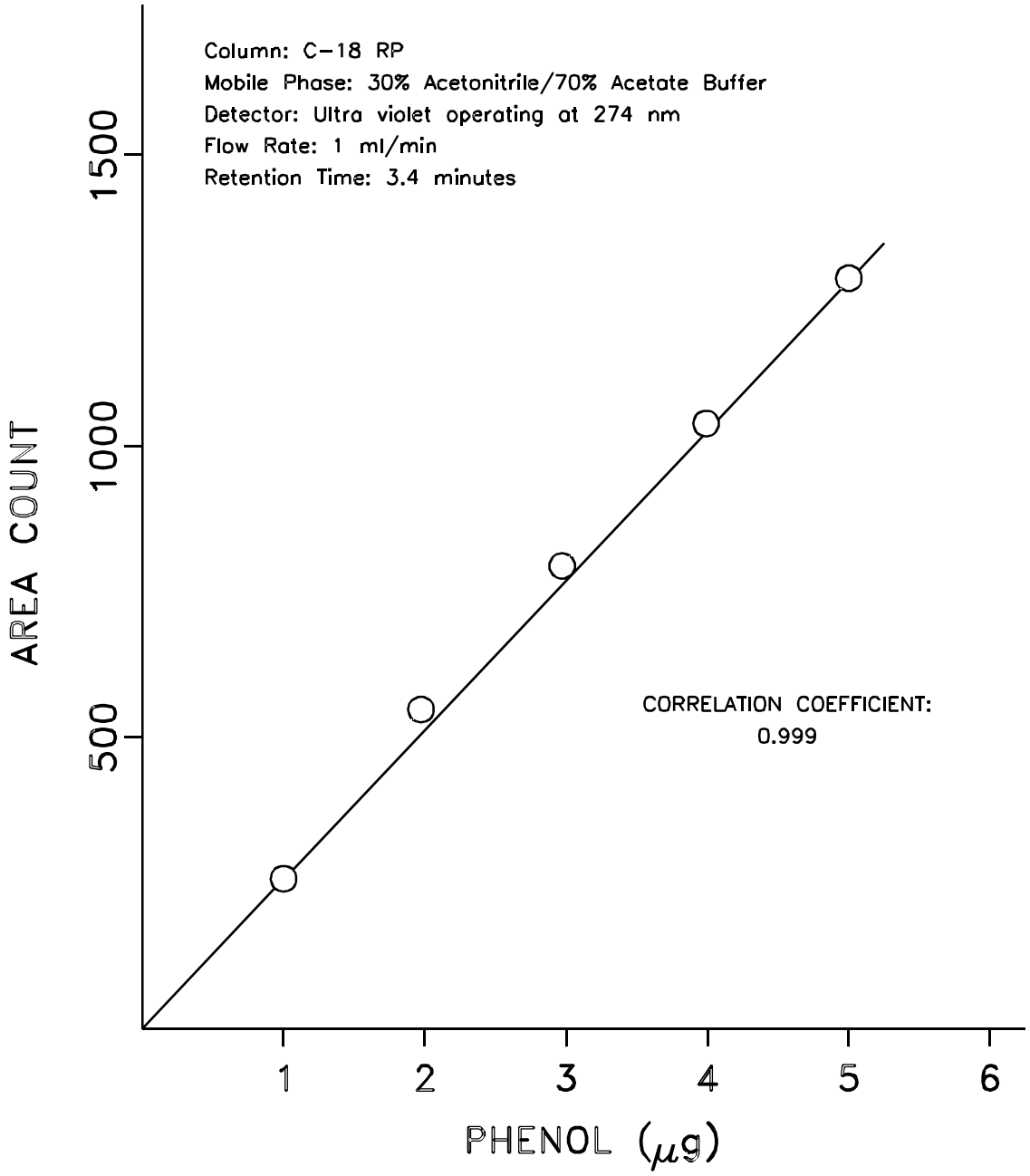

FIGURE 6. CALIBRATION CURVE FOR PHENOL

T08-23

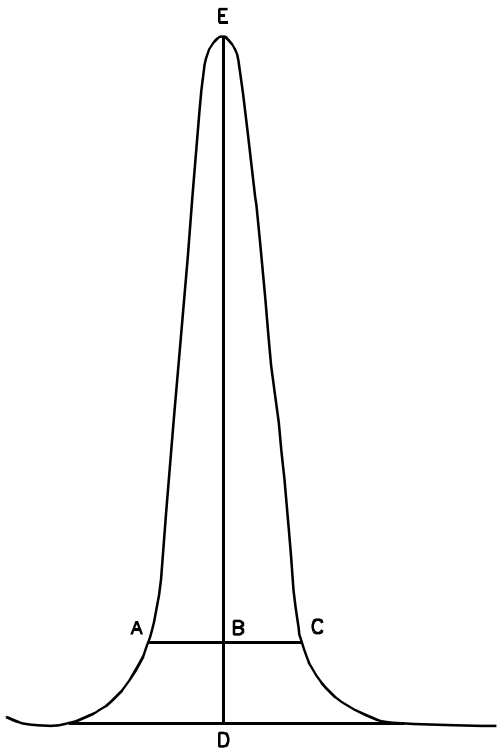

Asymmetry Factor = $\frac{BC}{AB}$

Example Calculation:

Peak Height = DE = 100mm
10% Peak Height = BD = 10mm
Peak Width at 10% Peak Height = AC = 23mm
AB = 11mm
BC = 12mm

Therefore: Asymmetry Factor = $\frac{12}{11}$ = 1.1

FIGURE 7. PEAK ASYMMETRY CALCULATION

T08-25

EPA/625/R-96/010b

Compendium of Methods for the Determination of Toxic Organic Compounds in Ambient Air

Second Edition

Compendium Method TO-9A

Determination Of Polychlorinated, Polybrominated And Brominated/Chlorinated Dibenzo-p-Dioxins And Dibenzofurans In Ambient Air

Center for Environmental Research Information
Office of Research and Development
U.S. Environmental Protection Agency
Cincinnati, OH 45268

January 1999

Method TO-9A
Acknowledgements

This Method was prepared for publication in the *Compendium of Methods for the Determination of Toxic Organic Compounds in Ambient Air, Second Edition* (EPA/625/R-96/010b), which was prepared under Contract No. 68-C3-0315, WA No. 3-10, by Midwest Research Institute (MRI), as a subcontractor to Eastern Research Group, Inc. (ERG), and under the sponsorship of the U.S. Environmental Protection Agency (EPA). Justice A. Manning, John Burckle, and Scott Hedges, Center for Environmental Research Information (CERI), and Frank F. McElroy, National Exposure Research Laboratory (NERL), all in the EPA Office of Research and Development, were responsible for overseeing the preparation of this method. Additional support was provided by other members of the Compendia Workgroup, which include:

- John O. Burckle, U.S. EPA, ORD, Cincinnati, OH
- James L. Cheney, Corps of Engineers, Omaha, NB
- Michael Davis, U.S. EPA, Region 7, KC, KS
- Joseph B. Elkins Jr., U.S. EPA, OAQPS, RTP, NC
- Robert G. Lewis, U.S. EPA, NERL, RTP, NC
- Justice A. Manning, U.S. EPA, ORD, Cincinnati, OH
- William A. McClenny, U.S. EPA, NERL, RTP, NC
- Frank F. McElroy, U.S. EPA, NERL, RTP, NC
- Heidi Schultz, ERG, Lexington, MA
- William T. "Jerry" Winberry, Jr., EnviroTech Solutions, Cary, NC

Method TO-9 was originally published in March of 1989 as one of a series of peer reviewed methods in the second supplement to *"Compendium of Methods for the Determination of Toxic Organic Compounds in Ambient Air,"* EPA 600/4-89-018. In an effort to keep these methods consistent with current technology, Method TO-9 has been revised and updated as Method TO-9A in this Compendium to incorporate new or improved sampling and analytical technologies.

This Method is the result of the efforts of many individuals. Gratitude goes to each person involved in the preparation and review of this methodology.

Author(s)

- Bob Harless, U.S. EPA, NERL, RTP, NC
- William T. "Jerry" Winberry, Jr., EnviroTech Solutions, Cary, NC
- Gil Radolovich, Midwest Research Institute, KC, MO
- Mark Horrigan, Midwest Research Institute, KC, MO

Peer Reviewers

- Audrey E. Dupuy, U.S. EPA, NSTL Station, MS
- Greg Jungclaus, Midwest Research Institute, KC, MO
- Stan Sleva, TRC, RTP, NC
- Robert G. Lewis, U.S. EPA, NERL, RTP, NC
- Lauren Drees, U.S. EPA, NRMRL, Cincinnati, OH

Finally, recognition is given to Frances Beyer, Lynn Kaufman, Debbie Bond, Cathy Whitaker, and Kathy Johnson of Midwest Research Institute's Administrative Services staff whose dedication and persistence during the development of this manuscript has enabled it's production.

DISCLAIMER

This Compendium has been subjected to the Agency's peer and administrative review, and it has been approved for publication as an EPA document. Mention of trade names or commercial products does not constitute endorsement or recommendation for use.

Method TO-9A

Determination Of Polychlorinated, Polybrominated And Brominated/Chlorinated Dibenzo-p-Dioxins And Dibenzofurans In Ambient Air

TABLE OF CONTENTS

	Page
1. Scope	9A-1
2. Summary of Method	9A-2
3. Significance	9A-3
4. Safety	9A-3
5. Applicable Documents	9A-4
5.1 ASTM Standards	9A-4
5.2 EPA Documents	9A-4
5.3 Other Documents	9A-5
6. Definitions	9A-5
7. Interferences And Contamination	9A-9
8. Apparatus	9A-9
8.1 High-Volume Sampler	9A-9
8.2 High-Volume Sampler Calibrator	9A-9
8.3 High Resolution Gas Chromatograph-High Resolution Mass Spectrometer-Data System (HRGC-HRMS-DS)	9A-10
9. Equipment And Materials	9A-10
9.1 Materials for Sample Collection	9A-10
9.2 Laboratory Equipment	9A-11
9.3 Reagents and Other Materials	9A-11
9.4 Calibration Solutions and Solutions of Standards Used in the Method	9A-12
10. Preparation Of PUF Sampling Cartridge	9A-12
10.1 Summary of Method	9A-12
10.2 Preparation of Sampling Cartridge	9A-13
10.3 Procedure for Certification of PUF Cartridge Assembly	9A-13
10.4 Deployment of Cartridges for Field Sampling	9A-14
11. Assembly, Calibration And Collection Using Sampling System	9A-14
11.1 Description of Sampling Apparatus	9A-14
11.2 Calibration of Sampling System	9A-15
11.3 Sample Collection	9A-21

TABLE OF CONTENTS (continued)

Page

12. Sample Preparation 9A-23
    12.1 Extraction Procedure for Quartz Fiber Filters and PUF Plugs 9A-23
    12.2 Cleanup Procedures 9A-23
    12.3 Glassware Cleanup Procedures 9A-25

13. HRGC-HRMS System Performance 9A-25
    13.1 Operation of HRGC-HRMS 9A-25
    13.2 Colum Performance 9A-26
    13.3 SIM Cycle Time 9A-26
    13.4 Peak Separation 9A-26
    13.5 Initial Calibration 9A-26
    13.6 Criteria Required for Initial Calibration 9A-27
    13.7 Continuing Calibration 9A-28

14. HRGC-HRMS Analysis And Operating Parameters 9A-28
    14.1 Sample Analysis 9A-28
    14.2 Identication Criteria 9A-29
    14.3 Quantification 9A-29
    14.4 Calculations 9A-30
    14.5 Method Detection Limits (MDLs) 9A-31
    14.6 2,3,7,8-TCDD Toxic Equivalents 9A-31

15. Quality Assurance/Quality Control (QA/QC) 9A-32

16. Report Format 9A-33

17. References 9A-34

METHOD TO-9A

Determination Of Polychlorinated, Polybrominated And Brominated/Chlorinated Dibenzo-p-Dioxins And Dibenzofurans In Ambient Air

1. Scope

1.1 This document describes a sampling and analysis method for the quantitative determination of polyhalogenated dibenzo-p-dioxins and dibenzofurans (PHDDs/PHDFs) in ambient air, which include the polychlorinated dibenzo-p-dioxins and dibenzofurans (PCDDs/PCDFs), polybrominated dibenzo-p-dioxins and dibenzofurans (PBDDs/PBDFs), and bromo/chloro dibenzo-p-dioxins and dibenzofurans (BCDDs/BCDFs). The method uses a high volume air sampler equipped with a quartz-fiber filter and polyurethane foam (PUF) adsorbent for sampling 325 to 400 m^3 ambient air in a 24-hour sampling period. Analytical procedures based on high resolution gas chromatography-high resolution mass spectrometry (HRGC-HRMS) are used for analysis of the sample.

1.2 The sampling and analysis method was evaluated using mixtures of PHDDs and PHDFs, including the 2,3,7,8-substituted congeners (1,2). It has been used extensively in the U.S. Environmental Protection Agency (EPA) ambient air monitoring studies (3,4) for determination of PCDDs and PCDFs.

1.3 The method provides accurate quantitative data for tetra- through octa-PCDDs/PCDFs (total concentrations for each isomeric series).

1.4 Specificity is attained for quantitative determination of the seventeen 2,3,7,8-substituted PCDDs/PCDFs and specific 2,3,7,8-substituted PBDD/PBDF and BCDD/BCDF congeners.

1.5 Minimum detection limits (MDLs) in the range of 0.01 to 0.2 picograms/meter^3 (pg/m^3) can be achieved for these compounds in ambient air.

1.6 Concentrations as low as 0.2 pg/m^3 can be accurately quantified.

1.7 The method incorporates quality assurance/quality control (QA/QC) measures in sampling, analysis, and evaluation of data.

1.8 The analytical procedures also have been used for the quantitative determination of these types of compounds in sample matrices such as stack gas emissions, fly ash, soil, sediments, water, and fish and human tissue (5-9).

1.9 The method is similar to methods used by other EPA, industry, commercial, and academic laboratories for determining PCDDs and PCDFs in various sample matrices (10-25). This method is an update of the original EPA Compendium Method TO-9, originally published in 1989 (26).

1.10 The method does not separately quantify gaseous PHDDs and PHDFs and particulate-associated PHDDs and PHDFs because some of the compounds volatilize from the filter and are collected by the PUF adsorbent. For example, most of the OCDD is collected by the filter and most of the TCDDs are collected by the PUF during sampling. PCDDs/PCDFs may be distributed between the gaseous and particle-adsorbed phases in ambient air. Therefore, the filter and PUF are combined for extraction in this method.

1.11 The sampling and analysis method is very versatile and can be used to determine other brominated and brominated/chlorinated dioxins and furans in the future when more analytical standards become available for use in the method. A recent modification of the sample preparation procedure provides the capability required to determine PCDDs, PCDFs, PCBs, and PAHs in the same sample (27).

2. Summary of Method

2.1 Quartz-fiber filters and glass adsorbent cartridges are pre-cleaned with appropriate solvents and dried in a clean atmosphere. The PUF adsorbent plugs are subjected to 4-hour Soxhlet extraction using an oversized extractor to prevent distortion of the PUF plug. The PUF plugs are then air dried in a clean atmosphere and installed in the glass cartridges. A 50 microliter (μL) aliquot of a 16 picogram/microliter (pg/μL) solution of $^{37}Cl_4$-2,3,7,8-TCDD is spiked to the PUF in the laboratory prior to field deployment. (Different amounts and additional $^{13}C_{12}$-labeled standards such as $^{13}C_{12}$-1,2,3,6,7,8-HxCDF may also be used if desired.) The cartridges are then wrapped in aluminum foil to protect from light, capped with Teflon® end caps, placed in a cleaned labeled shipping container, and tightly sealed with Teflon® tap until needed.

2.2 For sampling, the quartz-fiber filter and glass cartridge containing the PUF are installed in the high-volume air sampler.

2.3 The high-volume sampler is then immediately put into operation, usually for 24 hours, to sample 325 to 400 m^3 ambient air.

[Note: Significant losses were not detected when duplicate samplers were operated 7 days and sampled 2660 m^3 ambient air (1-4).]

2.4 The amount of ambient air sampled is recorded at the end of the sampling session. Sample recovery involves placing the filter on top of the PUF. The glass cartridge is then wrapped with the original aluminum foil, capped with Teflon® end caps, placed back into the original shipping container, identified, and shipped to the analytical laboratory for sample processing.

2.5 Sample preparation typically is performed on a "set" of 12 samples, which consists of 9 test samples, a field blank, a method blank, and a matrix spike.

2.6 The filter and PUF are combined for sample preparation, spiked with 9 $^{13}C_{12}$-labeled PCDD/PCDF and 4 PBDD/PBDF internal standards (28), and Soxhlet extracted for 16 hours. The extract is subjected to an acid/base clean-up procedure followed by clean-up on micro columns of silica gel, alumina, and carbon. The extract is then spiked with 0.5 ng $^{13}C_{12}$-1,2,3,4-TCDD (to determine extraction efficiencies achieved for the $^{13}C_{12}$-labeled internal standards) and then concentrated to 10 μL for HRGC-HRMS analysis in a 1 mL conical reactivial.

2.7 The set of sample extracts is subjected to HRGC-HRMS selected ion monitoring (SIM) analysis using a 60-m DB-5 or 60-m SP-2331 fused silica capillary column to determine the sampler efficiency, extraction efficiency, and the concentrations or the MDLs achieved for the PHDDs/PHDFs (28). Defined identification criteria and QA/QC criteria and requirements are used in evaluating the analytical data. The analytical results along with the volume of air sampled are used to calculate the concentrations of the respective tetra- through octa-isomers, the concentrations of the 2,3,7,8-chlorine or -bromine substituted isomers, or the MDLs. The concentrations and/or

MDLs are reported in pg/m^3. The EPA toxicity equivalence factors (TEFs) can be used to calculate the 2,3,7,8-TCDD toxicity equivalents (TEQs) concentrations, if desired (18).

3. Significance

3.1 The PHDDs and PHDFs may enter the environment by two routes: (1) manufacture, use and disposal of specific chemical products and by-products and (2) the emissions from combustion and incineration processes. Atmospheric transport is considered to be a major route for widespread dispersal of these compounds in stack gas emissions throughout the environment. The PCDDs/PCDFs are found as complex mixtures of all isomers in emissions from combustion sources. The isomer profiles of PCDDs/PCDFs found in ambient air are similar to those found in combustion sources. Isomer profiles of PCDDs/PCDFs related to chemical products and by-products are quite different in that only a few specific and characteristic isomers are detectable, which clearly indicate they are not from a combustion source.

3.2 The 2,3,7,8-substituted PCDDs/PCDFs are considered to be the most toxic isomers. Fortunately, they account for the smallest percentage of the total PCDD/PCDF concentrations found in stack gas emissions from combustion sources and in ambient air. The 2,3,7,8-tetrachlorodibenzo-p-dioxin (2,3,7,8-TCDD), 1 of 22 TCDD isomers and the most toxic member of PCDDs/PCDFs, is usually found as a very minor component in stack gas emissions (0.5 to 10 percent of total TCDD concentration) and is seldom found in ambient air samples. All of the 2,3,7,8-substituted PCDDs/PCDFs are retained in tissue of life-forms such as humans, fish, and wildlife, and the non 2,3,7,8-substituted PCDDs/PCDFs are rapidly metabolized and/or excreted.

3.3 Attention has been focused on determining PHDDs/PHDFs in ambient air only in recent years. The analyses are time-consuming, complex, difficult, and expensive. Extremely sensitive, specific, and efficient analytical procedures are required because the analysis must be performed for very low concentrations in the pg/m^3 and sub pg/m^3 range. The MDLs, likewise, must be in the range of 0.01 to 0.2 pg/m^3 for the results to have significant meaning for ambient air monitoring purposes. The background level of total PCDDs/PCDFs detected in ambient air is usually in the range of 0.5 to 3 pg/m^3, and the PBDFs is in the range of 0.1 to 0.2 pg/m^3 (2,3,14). Because PCDDs/PCDFs, PBDDs/PBDFs, and BCDDs/BCDFs can be formed by thermal reactions, there has been an increasing interest in ambient air monitoring, especially in the vicinities of combustion and incineration processes such as municipal waste combustors and resource recovery facilities (19,20). PBDDs/PBDFs can be created thermally (22,23), and they may also be formed in certain chemical processes (21). BCDDs/BCDFs have been detected in ash from combustion/incineration processes (9). The sampling and analysis method described here can be used in monitoring studies to accurately determine the presence or absence of pg/m^3 and sub pg/m^3 levels of these compounds in ambient air (26,27).

4. Safety

4.1 The 2,3,7,8-TCDD and other 2,3,7,8-chlorine or bromine substituted isomers are toxic and can pose health hazards if handled improperly. Techniques for handling radioactive and infectious materials are applicable to 2,3,7,8-TCDD and the other PHDDs and PHDFs. Only highly trained individuals who are thoroughly versed in appropriate laboratory procedures and familiar with the hazards of 2,3,7,8-TCDD should handle these substances. A good laboratory practice involves routine physical examinations and blood checks of employees working with 2,3,7,8-TCDD. It is the responsibility of the laboratory personnel to ensure that safe handling procedures are employed.

4.2 The toxicity or carcinogenicity of the other penta-, hexa-, hepta-, and octa-PHDDs/PHDFs with chlorine or bromine atoms in positions 2,3,7,8 are known to have similar, but lower, toxicities. However, each compound should be treated as a potential health hazard and exposure to these compounds must be minimized.

4.3 While the procedure specifies benzene as the extraction solution, many laboratories have substituted toluene for benzene (28). This is due to the carcinogenic nature of benzene. The EPA is presently studying the replacement of benzene with toluene.

4.4 A laboratory should develop a strict safety program for working with these compounds, which would include safety and health protocols; work performed in well ventilated and controlled access laboratory; maintenance of current awareness file of OSHA regulations regarding the safe handling of chemicals specified in the method; protective equipment; safety training; isolated work area; waste handling and disposal procedures; decontamination procedures; and laboratory wipe tests. Other safety practices as described in EPA Method 613, Section 4, July 1982 version, EPA Method 1613 Revision A, April 1990, Office of Water and elsewhere (29,30).

5. Applicable Documents

5.1 ASTM Standards

- Method D1365 *Definitions of Terms Relating to Atmospheric Sampling and Analysis.*
- Method E260 *Recommended Practice for General Gas Chromatography Procedures.*
- Method E355 *Practice for Gas Chromatography Terms and Relationships.*

5.2 EPA Documents

- *Quality Assurance Handbook for Air Pollution Measurement Systems, Volume II*, U. S. Environmental Protection Agency, EPA 600/R-94-038b, May 1994.
- *Protocol for the Analysis of 2,3,7,8-Tetrachlorodibenzo-p-Dioxin by High Resolution Gas Chromatography-High Resolution Mass Spectrometry*, U. S. Environmental Protection Agency, EPA 600/40-86-004, January 1986.
- "Evaluation of an EPA High Volume Air Sampler for Polychlorinated Dibenzo-p-Dioxins and Polychlorinated Dibenzofurans," undated report by Battelle under Contract No. 68-02-4127, Project Officers Robert G. Lewis and Nancy K. Wilson, U. S. Environmental Protection Agency, Research Triangle Park, North Carolina.
- *Compendium of Methods for the Determination of Toxic Organic Compounds in Ambient Air: Method TO-9, Second Supplement*, U. S. Environmental Protection Agency, EPA 600/4-89-018, March 1989.
- *Technical Assistance Document for Sampling and Analysis of Toxic Organic Compounds in Ambient Air*, U. S. Environmental Protection Agency, EPA 600/4-83-027, June 1983.
- "Analytical Procedures and Quality Assurance for Multimedia Analysis of Polychlorinated Dibenzo-p-Dioxins and Dibenzofurans by High Resolution Gas Chromatography - Low Resolution Mass Spectrometry," U. S. Environmental Protection Agency/OSW, SW-846, RCRA 8280 HRGC-LRMS, January 1987.
- "Analytical Procedures and Quality Assurance for Multimedia Analysis of Polychlorinated Dibenzo-p-Dioxins and Dibenzofurans by High Resolution Gas Chromatography - High Resolution Mass Spectrometry," U. S. Environmental Protection Agency/OSW, SW-846, RCRA 8290 HRGC-HRMS, June 1987.

• Harless, R., "Analytical Procedures and Quality Assurance Plan for the Determination of PCDDs and PCDFs Ambient Air near the Rutland, Vermont Municipal Incinerator," Final Report, U. S. Environmental Protection Agency, AREAL, RTP, NC, 1988.
• *Feasibility of Environmental Monitoring and Exposure Assessment for a Municipal Waste Combustor: Rutland, Vermont Pilot Study*, U. S. Environmental Protection Agency, EPA 600/8-91/007, March 1991.
• "Method 23, Determination of Polychlorinated Dibenzo-p-Dioxins (PCDDs) and Dibenzofurans (PCDFs) from Stationary Sources." *Federal Register*, Vol. 56, No. 30, February 13, 1991.
• *Method 1613 Tetra- through Octa-Chlorinated Dioxins and Furans by Isotope Dilution HRGC-HRMS*, U. S. Environmental Protection Agency, Office of Solid Waste, Washington, DC, April 1990.

5.3 Other Documents

• "Operating Procedures for Model PS-1 Sampler," Graseby/General Metal Works, Inc., Village of Cleves, OH 45002 (800-543-7412).
• "Chicago Air Quality: PCB Air Monitoring Plan, Phase 2," IEAP/APC/86-011, Illinois Environmental Protection Agency, Division of Air Pollution Control, April 1986.
• "Operating Procedures for the Thermo Environmental Semi-volatile Sampler," Thermo Environmental Instruments, Inc. (formerly Wedding and Associates), 8 West Forge Parkway, Franklin, MA 02038 (508-520-0430).

6. Definitions

[Note: Definitions used in this document and any user-prepared Standard Operating Procedures (SOPs) should be consistent with those used in ASTM D1356. All abbreviations and symbols are defined within this document at the point of first use.]

6.1 Polychlorinated dibenzo-p-dioxins (PCDDs) and polychlorinated dibenzofurans (PCDFs)—compounds that contain from 1 to 8 chlorine atoms, resulting in a total of 75 PCDDs and 135 PCDFs. The structures are shown in Figure 1. The numbers of isomers at different chlorination levels are shown in Table 1. The seventeen 2,3,7,8-substituted PCDDs/PCDFs are shown in Table 2.

6.2 Polybrominated dibenzo-p-dioxins (PBDDs) and polybrominated dibenzofurans (PBDFs)—compounds that have the same structure and contain from 1 to 8 bromine atoms, resulting in a total of 75 PBDDs and 135 PBDFs. The structures and isomers are the same as those of the PCDDs/PCDFs shown in Figure 1 and Tables 1 and 2.

6.3 Brominated/chlorinated dibenzo-p-dioxins (BCDDs) and brominated/chlorinated dibenzofurans (BCDFs)—compounds with the same structures and may contain from 1 to 8 chlorine and bromine atoms, resulting in 1550 BCDD congeners and 3050 BCDF congeners.

6.4 Polyhalogenated dibenzo-p-dioxins (PHDDs) and polyhalogenated dibenzofurans (PHDFs)—dibenzo-p-dioxins and dibenzofurans substituted with 1 or more halogen atoms.

6.5 Isomer—compounds having the sample number and type of halogen atoms, but substituted in different positions. For example, 2,3,7,8-TCDD and 1,2,3,4-TCDD are isomers. Additionally, there are 22 isomers that constitute the homologues of TCDDs.

6.6 Isomeric group—a group of dibenzo-p-dioxins or dibenzofurans having the same number of halogen atoms. For example, the tetra-chlorinated dibenzo-p-dioxins.

6.7 Internal Standard—is an isotopically-labeled analog that is added to all samples, including method blanks (process and field) and quality control samples, before extraction. They are used along with response factors to measure the concentration of the analytes. Nine PCDD/PCDF and 4 PBDD/PBDF internal standards are used in this method. There is one for each of the chlorinated dioxin and furan isomeric groups with a degree of halogenation ranging from four to eight, with the exception of OCDF.

6.8 High-Resolution Calibration Solutions (see Table 3)—solutions in tridecane containing known amounts of 17 selected PCDDs and PCDFs, 9 internal standards ($^{13}C_{12}$-labeled PCDDs/PCDFs), 2 field standards, 4 surrogate standards, and 1 recovery standard. The set of 5 solutions is used to determine the instrument response of the unlabeled analytes relative to the $^{13}C_{12}$-labeled internal standards and of the $^{13}C_{12}$-labeled internal standards relative to the surrogate, field and recovery standards. Different concentrations and other standards may be used, if desired. Criteria for acceptable calibration as outlined in Section 13.5 should be met in order to use the analyte relative response factors.

6.9 Sample Fortification Solutions (see Table 4)—solutions (in isooctane) containing the $^{13}C_{12}$-labeled internal standards that are used to spike all samples, field blanks, and process blanks before extraction. Brominated standards used only when desired.

6.10 Recovery Standard Solution (see Table 5)—Recovery Standard Solution (see Table 5)—an isooctane solution containing the $^{13}C_{12}$-1,2,3,4-TCDD ($^{13}C_{12}$-2,3,7,8,9-HxDD optional) recovery standards that are added to the extract before final concentration for HRGC-HRMS analysis to determine the recovery efficiencies achieved for the $^{13}C_{12}$-labeled internal standards.

6.11 Air Sampler Field Fortification Solution (see Table 6)—an isooctane solution containing the $^{37}Cl_4$-2,3,7,8-TCDD standard that is spiked to the PUF plugs prior to shipping them to the field for air sampling.

6.12 Surrogate Standard Solution (see Table 7)—an isooctane solution containing 4 $^{13}C_{12}$-labeled standards that may be spiked to the filter or PUF prior to air sampling, to the sample prior to extraction, or to the sample extract before cleanup or before HRGC-HRMS analysis to determine sampler efficiency method efficiency or for identification purposes (28). Other standards and different concentrations may be used, if desired.

6.13 Matrix Spike and Method Spike Solutions (see Table 8)—isooctane solutions of native (non-labeled) PCDDs and PCDFs and PBDDs and PBDFs that are spiked to a clean PUF prior to extraction.

6.14 Sample Set—consists of nine test samples, field blank, method blank, and matrix spiked with native PHDDs/PHDFs. Sample preparation, HRGC-HRMS analysis, and evaluation of data is performed on a sample set.

6.15 Lab Control Spike—standard that is prepared during sample preparation and that contains exactly the same amounts of all of the labeled and unlabeled standards that were used in extraction and cleanup of the sample set for HRGC-HRMS analysis.

6.16 Field Blank—consists of a sample cartridge containing PUF and filter that is spiked with the filed fortification solution, shipped to the field, installed on the sampler, and passively exposed at the sampling area (the sampler is not operated). It is then sealed and returned to the laboratory for extraction, cleanup, and HRGC-HRMS analysis. It is treated in exactly the same manner as a test sample. A field blank is processed with each sampling episode. The field blank represents the background contributions from passive exposure to ambient air, PUF, quartz fiber filter, glassware, and solvents.

6.17 Laboratory Method Blank—represents the background contributions from glassware, extraction and cleanup solvents. A Soxhlet extractor is spiked with a solution of $^{13}C_{12}$-labeled internal standards, extracted, cleaned up, and analyzed by HRGC-HRMS in exactly the same manner as the test samples.

6.18 Solvent Blank—an aliquot of solvent (the amount used in the method) that is spiked with the $^{13}C_{12}$-labeled internal standards and concentrated to 60 μL for HRGC-HRMS analysis. The analysis provides the background contributions from the specific solvent.

6.19 GC Column Performance Evaluation Solution (see Table 9)—a solution containing a mixture of selected PCDD/PCDF isomers, including the first and last chromatographic eluters for each isomeric group. Used to demonstrate continued acceptable performance of the capillary column and to define the PCDD/PCDF retention time windows. Also includes a mixture of tetradioxin isomers that elute closest to 2,3,7,8-TCDD.

6.20 QA/QC Audit Samples—samples of PUF that contain known amounts of unlabeled PCDDS and PCDFs. These samples are submitted as "blind" test samples to the analytical laboratory. The analytical results can then be used to determine and validate the laboratory's accuracy, precision and overall analytical capabilities for determination of PCDDs/PCDFs.

6.21 Relative Response Factor—response of the mass spectrometer to a known amount of an analyte relative to a known amount of a labeled internal standard.

6.22 Method Blank Contamination—the method blank should be free of interferences that affect the identification and quantification of PHDDs and PHDFs. A valid method blank is an analysis in which all internal standard signals are characterized by S/N ratio greater than 10:1 and the MDLs are adequate for the study. The set of samples must be extracted and analyzed again if a valid method blank cannot be achieved.

6.23 Sample Rerun—additional cleanup of the extract and reanalysis of the extract.

6.24 Extract Reanalysis—analysis by HRGC-HRMS of another aliquot of the final extract.

6.25 Mass Resolution Check—a standard method used to demonstrate a static HRMS resolving power of 10,000 or greater (10 percent valley definition).

6.26 Method Calibration Limits (MCLs)—for a given sample size, a final extract volume, and the lowest and highest calibration solutions, the lower and upper MCLs delineate the region of quantitation for which the HRGC-HRMS system was calibrated with standard solutions.

6.27 HRGC-HRMS Solvent Blank—a 1 or 2 μL aliquot of solvent that is analyzed for tetra- through octa-PCDDs and PCDFs following the analysis of a sample that contains high concentrations of these compounds.

An acceptable solvent blank analysis (free of PHDDs/PHDFs) should be achieved before continuing with analysis of the test samples.

6.28 Sampler Spike (SS)—a sampler that is spiked with known amounts of the air sampler field fortification solution (see Table 6) and the matrix spike solutions (see Table 8) prior to operating the sampler for 24 hours to sample 325-400 std m^3 ambient air. The results achieved for this sample can be used to determine the efficiency, accuracy and overall capabilities of the sampling device and analytical method.

6.29 Collocated Samplers (CS)—two samplers installed close together at the same site that can be spiked with known amounts of the air sampler field fortification solution (see Table 6) prior to operating the samplers for 24 hours to sample 325-400 std m^3 ambient air. The analytical results for these two samples can be used to determine and evaluate efficiency, accuracy, precision, and overall capabilities of the sampling device and analytical method.

6.30 Congener—a term which refers to any one particular member of the same chemical family. As an example, there are 75 congeners of chlorinated dibenzo-p-dioxins. A specific congener is denoted by unique chemical notations. For example, 2,4,8,9-tetrachlorodibenzofuran is referred to as 2,4,8,9-TCDF.

6.31 Homologue—a term which refers to a group of structurally related chemicals that have the same degree of chlorination. For example, there are eight homologues of CDDs, monochlorinated through octochlorinated. Notation for homologous classes is as follows:

Class	Acronym	
Dibenzo-p-dioxin	D	
Dibenzofuran	F	
No. of halogens	**Acronym**	**Example**
1	M	
2	D	2,4-DCDD
3	Tr	
4	T	1,4,7,8-TCDD
5	Pe	
6	Hx	
7	Hp	
8	O	
1 through 8	CDDs and CDFs	

7. Interferences And Contamination

7.1 Any compound having a similar mass and mass/charge (m/z) ratio eluting from the HRGC column within ± 2 seconds of the PHDD/PHDF of interest is a potential interference. Also, any compound eluting from the HRGC column in a very high concentration will decrease sensitivity in the retention time frame. Some commonly encountered interferences are compounds that are extracted along with the PCDDs and PCDFs or other PHDDs/PHDFs, e.g., polychlorinated biphenyls (PCBs), methoxybiphenyls, polychlorinated diphenylethers, polychlorinated naphthalenes, DDE, DDT, etc. The cleanup procedures are designed to eliminate the majority of these substances. The capillary column resolution and mass spectrometer resolving power are extremely helpful in segregating any remaining interferences from PCDDs and PCDFs. The severity of an interference

problem is usually dependent on the concentrations and the mass spectrometer and chromatographic resolutions. However, polychlorinated diphenylethers are extremely difficult to resolve from PCDFs because they elute in retention time windows of PCDFs, and their fragment ion resulting from the loss of 2 chlorine atoms is identical to that of the respective PCDF. For example, the molecular ions of hexachlorodiphenylethers must be monitored to confirm their presence or absence in the analysis for TCDFs. This requirement also applies to the other PCDFs and PBDFs.

7.2 Since very low levels of PCDDs and PCDFs must be determined, the elimination of interferences is essential. High purity reagents and solvents must be used, and all equipment must be scrupulously cleaned. All materials, such as PUF, filter solvents, etc., used in the procedures are monitored and analyzed frequently to ensure the absence of contamination. Cleanup procedures must be optimized and performed carefully to minimize the loss of analyte compounds during attempts to increase their concentrations relative to other sample components. The analytical results achieved for the field blank, method blank, and method spike in a "set" of samples is extremely important in evaluating and validating the analytical data achieved for the test samples.

8. Apparatus

[Note: This method was developed using the PS-1 semi-volatile sampler provided by General Metal Works, Village of Cleves, OH as a guideline. EPA has experience in use of this equipment during various field monitoring programs over the last several years. Other manufacturers' equipment should work as well. However, modifications to these procedures may be necessary if another commercially available sampler is selected.]

8.1 High-Volume Sampler (see Figure 2). Capable of pulling ambient air through the filter/adsorbent cartridge at a flow rate of approximately 8 standard cubic feet per minute (scfm) (0.225 std m^3\min) to obtain a total sample volume of greater than 325 scm over a 24-hour period. Major manufacturers are:

- Tisch Environmental, Village of Cleves, OH
- Andersen Instruments Inc., 500 Technology Ct., Smyrna, GA
- Thermo Environmental Instruments, Inc., 8 West Forge Parkway, Franklin, MA

8.2 High-Volume Sampler Calibrator. Capable of providing multipoint resistance for the high-volume sampler. Major manufacturers are:

- Tisch Environmental, Village of Cleves, OH
- Andersen Instruments Inc., 500 Technology Ct., Smyrna, GA
- Thermo Environmental Instruments, Inc., 8 West Forge Parkway, Franklin, MA

8.3 High Resolution Gas Chromatograph-High Resolution Mass Spectrometer-Data System (HRGC-HRMS-DS)

8.3.1 The GC should be equipped for temperature programming and all of the required accessories, such as gases and syringes, should be available. The GC injection port should be designed for capillary columns. Splitless injection technique, on-column injections, or moving needle injectors may be used. It is important to use the same technique and injection volume at all times.

8.3.2 The HRGC-HRMS interface, if used, should be constructed of fused silica tubing or all glass or glass lined stainless steel and should be able to withstand temperatures up to 340°C. The interface should not degrade the separation of PHDD/PHDF isomers achieved by the capillary column. Active sites or cold spots in the interface can cause peak broadening and peak tailing. The capillary column should be fitted directly into the HRMS ion source to avoid these types of problems. Graphite ferrules can adsorb PHDDs/PHDFs and cause problems. Therefore, Vespel® or equivalent ferrules are recommended.

8.3.3 The HRMS system should be operated in the electron impact ionization mode. The static resolving power of the instrument should be maintained at 10,000 or greater (10% valley definition). The HRMS should be operated in the selected ion monitoring (SIM) mode with a total cycle time of one second or less. At a minimum, the ions listed in Tables 10, 11, and 12 for each of the select ion monitoring (SIM) descriptors should be monitored. It is important to use the same set of ions for both calibration and sample analysis.

8.3.4 The data system should provide for control of mass spectrometer, data acquisition, and data processing. The data system should have the capability to control and switch to different sets of ions (descriptors/mass menus shown in Tables 10, 11, and 12) at different times during the HRGC-HRMS SIM analysis. The SIM traces/displays of ion signals being monitored can be displayed on the terminal in real time and sorted for processing. Quantifications are reported based on computer generated peak areas. The data system should be able to provide hard copies of individual ion chromatograms for selected SIM time intervals, and it should have the capability to allow measurement of noise on the baseline. It should also have the capability to acquire mass-spectral peak profiles and provide hard copies of the peak profiles to demonstrate the required mass resolution.

8.3.5 HRGC columns, such as the DB-5 (28) and SP-2331 fused silica capillary columns, and the operating parameters known to produce acceptable results are shown in Tables 13 and 14. Other types of capillary columns may also be used as long as the performance requirements can be successfully demonstrated.

9. Equipment And Materials

9.1 Materials for Sample Collection (see Figure 3a)

9.1.1 Quartz fiber filter. 102 millimeter bindless quartz microfiber filter, Whatman International Ltd, QMA-4.

9.1.2 Polyurethane foam (PUF) plugs. 3-inch thick sheet stock polyurethane type (density 0.022 g/cm^3). The PUF should be of the polyether type used for furniture upholstery, pillows, and mattresses. The PUF cylinders (plugs) should be slightly larger in diameter than the internal diameter of the cartridge. Sources of equipment are Tisch Environmental, Village of Cleves, OH; University Research Glassware, 116 S. Merritt Mill Road, Chapel Hill, NC; Thermo Environmental Instruments, Inc., 8 West Forge Parkway, Franklin, MA; Supelco, Supelco Park, Bellefonte, PA; and SKC Inc., 334 Valley View Road, Eighty Four, PA (see Figure 3b).

9.1.3 Teflon® end caps. For sample cartridge. Sources of equipment are Tisch Environmental, Village of Cleves, OH; and University Research Glassware, 116 S. Merritt Mill Road, Chapel Hill, NC (see Figure 3b).

9.1.4 Sample cartridge aluminum shipping containers. For sample cartridge shipping. Sources of equipment are Tisch Environmental, Village of Cleves, OH; and University Research Glassware, 116 S. Merritt Mill Road, Chapel Hill, NC (see Figure 3b).

9.1.5 Glass sample cartridge. For sample collection. Sources of equipment are Tisch Environmental, Village of Cleves, OH; Thermo Environmental Instruments, Inc., 8 West Forge, Parkway, Franklin, MA; and University Research Glassware, 116 S. Merritt Mill Road, Chapel Hill, NC (see Figure 3b).

9.2 Laboratory Equipment

9.2.1 Laboratory hoods.
9.2.2 Drying oven.
9.2.3 Rotary evaporator. With temperature-controlled water bath.
9.2.4 Balances.
9.2.5 Nitrogen evaporation apparatus.
9.2.6 Pipettes. Disposal Pasteur, 150-mm long x 5-mm i.d.
9.2.7 Soxhlet apparatus. 500-mL.
9.2.8 Glass funnels.
9.2.9 Desiccator.
9.2.10 Solvent reservoir. 125-mL, Kontes, 12.35-cm diameter.
9.2.11 Stainless steel spoons and spatulas.
9.2.12 Glass wool. Extracted with methylene chloride, stored in clean jar.
9.2.13 Laboratory refrigerator.
9.2.14 Chromatographic columns.
9.2.15 Perfluorokerosenes.

9.3 Reagents and Other Materials

9.3.1 Sulfuric acid. Ultrapure, ACS grade, specific gravity 1.84, acid silica.
9.3.2 Sodium hydroxide. Potassium hydroxide, reagent grade, base silica.
9.3.3 Sodium sulfate.
9.3.4 Anhydrous, reagent grade.
9.3.5 Glass wool. Silanized, extracted with methylene chloride and hexane, and dried.
9.3.6 Diethyl ether. High purity, glass distilled.
9.3.7 Isooctane. Burdick and Jackson, glass-distilled.
9.3.8 Hexane. Burdick and Jackson, glass-distilled.
9.3.9 Toluene. Burdick and Jackson, glass-distilled, or equivalent.
9.3.10 Methylene chloride. Burdock and Jackson, chromatographic grade, glass distilled.
9.3.11 Acetone. Burdick and Jackson, high purity, glass distilled.
9.3.12 Tridecane. Aldrich, high purity, glass distilled.
9.3.13 Isooctane. Burdick and Jackson, high purity, glass distilled.
9.3.14 Alumina. Acid, pre-extracted (16-21 hours) and activated.
9.3.15 Silica gel. High purity grade, type 60, 70-230 mesh; extracted in a Soxhlet apparatus with methylene chloride (see Section 8.18) for 16-24 hours (minimum of 3 cycles per hour) and activated by heating in a foil-covered glass container for 8 hours at 130°C.
9.3.16 18 percent Carbopack C/Celite 545.
9.3.17 Methanol. Burdick and Jackson, high purity, glass distilled.
9.3.18 Nonane. Aldrich, high purity, glass distilled.
9.3.19 Benzene. High purity, glass distilled.

9.4 Calibration Solutions and Solutions of Standards Used in the Method

9.4.1 HRGC-HRMS Calibration Solutions (see Table 3). Solutions containing $^{13}C_{12}$-labeled and unlabeled PCDDs and PCDFs at known concentrations are used to calibrate the instrument. These standards can be obtained from various commercial sources such as Cambridge Isotope Laboratories, 50 Frontage Road, Andover, MA 01810, 508-749-8000.

9.4.2 Sample Fortification Solutions (see Table 4). An isooctane solution (or nonane solution) containing the $^{13}C_{12}$-labeled PCDD/PCDF and PBDD/PBDF internal standards at the listed concentrations. The internal standards are spiked to all samples prior to extraction and are used to measure the concentration of the unlabeled native analytes and to determine MDLs.

9.4.3 Recovery Standard Spiking Solution (see Table 5). An isooctane solution containing $^{13}C_{12}$-1,2,3,4-TCDD at a concentration of 10 pg/μL. Additional recovery standards may be used if desired.

9.4.4 Sampler Field Fortification Solution (see Table 6). An isooctane solution containing 10 pg/μL $^{37}Cl_4$-2,3,7,8-TCDD.

9.4.5 Surrogate Standards Solution (see Table 7). An isooctane solution containing the four $^{13}C_{12}$-labeled standards at a concentration of 100 pg/μL.

9.4.6 Matrix/Method Spike Solution (see Table 8). An isooctane solution containing the unlabeled PCDDs/PCDFs and PBDDs/PBDFs at the concentrations listed.

[Note: All PHDD/PHDF solutions listed above should be stored in a refrigerator at less than or equal to 4°C in the dark. Exposure of the solutions to light should be minimized.]

9.4.7 Column Performance Evaluation Solutions (see Table 9). Isooctane solutions of first and last chromatographic eluting isomers for each isomeric group of tetra- through octa-CDDs/CDFs. Also includes a mixture of tetradioxin isomers that elute closest to 2,3,7,8-TCDD.

10. Preparation Of PUF Sampling Cartridge

10.1 Summary of Method

10.1.1 This part of the procedure discusses pertinent information regarding the preparation and cleaning of the filter, adsorbents, and filter/adsorbent cartridge assembly. The separate batches of filters and adsorbents are extracted with the appropriate solvent.

10.1.2 At least one PUF cartridge assembly and one filter from each batch, or 10 percent of the batch, whichever is greater, should be tested and certified before the batch is considered for field use.

10.1.3 Prior to sampling, the cartridges are spiked with surrogate compounds.

10.2 Preparation of Sampling Cartridge

10.2.1 Bake the quartz filters at 400°C for 5 hours before use.

10.2.2 Set aside the filters in a clean container for shipment to the field or prior to combining with the PUF glass cartridge assembly for certification prior to field deployment.

10.2.3 The PUF plugs are 6.0-cm diameter cylindrical plugs cut from 3-inch sheet stock and should fit, with slight compression, in the glass cartridge, supported by the wire screen (see Figure 2). During cutting, rotate the die at high speed (e.g., in a drill press) and continuously lubricate with deionized or distilled water. Pre-cleaned PUF plugs can be obtained from commercial sources (see Section 9.1.2).

10.2.4 For initial cleanup, place the PUF plugs in a Soxhlet apparatus and extract with acetone for 16 hours at approximately 4 cycles per hour. When cartridges are reused, use diethyl ether/hexane (5 to 10 percent volume/volume [v/v]) as the cleanup solvent.

[Note: A modified PUF cleanup procedure can be used to remove unknown interference components of the PUF blank. This method consists of rinsing 50 times with toluene, acetone, and diethyl ether/hexane (5 to 10 percent v/v), followed by Soxhlet extraction. The extracted PUF is placed in a vacuum oven connected to a water aspirator and dried at room temperature for approximately 2 to 4 hours (until no solvent odor is detected). The extract from the Soxhlet extraction procedure from each batch may be analyzed to determine initial cleanliness prior to certification.]

10.2.5 Fit a nickel or stainless steel screen (mesh size 200/200) to the bottom of a hexane-rinsed glass sampling cartridge to retain the PUF adsorbents, as illustrated in Figure 2. Place the Soxhlet-extracted, vacuum-dried PUF (2.5-cm thick by 6.5-cm diameter) on top of the screen in the glass sampling cartridge using polyester gloves.

10.2.6 Wrap the sampling cartridge with hexane-rinsed aluminum foil, cap with the Teflon® end caps, place in a cleaned labeled aluminum shipping container, and seal with Teflon® tape. Analyze at least 1 PUF plug from each batch of PUF plugs using the procedures described in Section 10.3, before the batch is considered acceptable for field use. A level of 2 to 20 pg for tetra-,penta-, and hexa- and 40 to 150 pg for hepta- and octa-CDDs similar to that occasionally detected in the method blank (background contamination) is considered to be acceptable. Background levels can be reduced further, if necessary. Cartridges are considered clean for up to 30 days from date of certification when stored in their sealed containers.

10.3 Procedure for Certification of PUF Cartridge Assembly

10.3.1 Extract 1 filter and PUF adsorbent cartridge by Soxhlet extraction and concentrate using a Kuderna-Danish (K-D) evaporator for each lot of filters and cartridges sent to the field.

10.3.2 Assemble the Soxhlet apparatus. Charge the Soxhlet apparatus with 300 mL of the extraction solvent (10 percent v/v diethyl ether/hexane) and reflux for 2 hours. Let the apparatus cool, disassemble it, and discard the used extraction solvent. Transfer the filter and PUF glass cartridge to the Soxhlet apparatus (the use of an extraction thimble is optional).

[Note: The filter and adsorbent assembly are tested together in order to reach detection limits, to minimize cost and to prevent misinterpretation of the data. Separate analyses of the filter and PUF would not yield useful information about the physical state of most of the PHDDs and PHDFs at the time of sampling due to evaporative losses from the filter during sampling.]

10.3.3 Add 300 mL of diethyl ether/hexane (10 percent v/v) to the Soxhlet apparatus. Reflux the sample for 18 hours at a rate of at least 3 cycles per hour. Allow to cool; then disassemble the apparatus.

10.3.4 Assemble a K-D concentrator by attaching a 10-mL concentrator tube to a 500-mL evaporative flask.

10.3.5 Transfer the extract by pouring it through a drying column containing about 10 cm of anhydrous granular sodium sulfate and collect the extract in the K-D concentrator. Rinse the Erlenmeyer flask and column with 20 to 30 mL of 10 percent diethylether/hexane to complete the quantitative transfer.

10.3.6 Add 1 or 2 clean boiling chips and attach a 3-ball Snyder column to the evaporative flask. Pre-wet the Snyder column by adding about 1 mL of the extraction solvent to the top of the column. Place the K-D apparatus on a hot water bath (50°C) so that the concentrator tube is partially immersed in the hot water, and the entire lower rounded surface of the flask is bathed with hot vapor. Adjust the vertical position of the apparatus

and the water temperature as required to complete the concentration in one hour. At the proper rate of distillation, the balls of the column will actively chatter but the chambers will not flood with condensed solvent. When the apparent volume of liquid reaches approximately 5 mL, remove the K-D apparatus from the water bath and allow it to drain and cool for at least 5 minutes. Remove the Snyder column and rinse the flask and its lower joint into the concentrator tube with 5 mL of hexane. A 5-mL syringe is recommended for this operation.

10.3.7 Concentrate the extract to 1 mL, cleanup the extract (see Section 12.2.2), and analyze the final extract using HRGC-HRMS.

10.3.8 The level of target compounds must be less than or equal to 2 to 20 pg for tetra-, penta-, and hexa- and 40 to 150 pg for hepta- and octa-CDDs for each pair of filter and adsorbent assembly analyzed is considered to be acceptable.

10.4 Deployment of Cartridges for Field Sampling

10.4.1 Prior to field deployment, add surrogate compounds (i.e., chemically inert compounds not expected to occur in an environmental sample) to the center bed of the PUF cartridge, using a microsyringe. The surrogate compounds (see Table 3) must be added to each cartridge assembly.

10.4.2 Use the recoveries of the surrogate compounds to monitor for unusual matrix effects and gross sampling processing errors. Evaluate surrogate recovery for acceptance by determining whether the measured concentration falls within the acceptance limits.

11. Assembly, Calibration And Collection Using Sampling System

[Note: This method was developed using the PS-1 semi-volatile sampler provided by General Metal Works, Village of Cleves, OH as a guideline. EPA has experience in use of this equipment during various field monitoring programs over the last several years. Other manufacturers' equipment should work as well. However, modifications to these procedures may be necessary if another commercially available sampler is selected.]

11.1 Description of Sampling Apparatus

The entire sampling system is diagrammed in Figure 1. This apparatus was developed to operate at a rate of 4 to 10 scfm (0.114 to 0.285 std m^3/min) and is used by EPA for high-volume sampling of ambient air. The method write-up presents the use of this device.

The sampling module (see Figure 2) consists of a filter and a glass sampling cartridge containing the PUF utilized to concentrate dioxins/furans from the air. A field portable unit has been developed by EPA (see Figure 4).

11.2 Calibration of Sampling System

Each sampler should be calibrated (1) when new, (2) after major repairs or maintenance, (3) whenever any audit point deviates from the calibration curve by more than 7 percent, (4) before/after each sampling event, and (5) when a different sample collection media, other than that which the sampler was originally calibrated to, will be used for sampling.

11.2.1 Calibration of Orifice Transfer Standard. Calibrate the modified high volume air sampler in the field using a calibrated orifice flow rate transfer standard. Certify the orifice transfer standard in the laboratory against a positive displacement rootsmeter (see Figure 5). Once certified, the recertification is performed rather

infrequently if the orifice is protected from damage. Recertify the orifice transfer standard performed once per year utilizing a set of five multiple resistance plates.

[Note: The set of five multihole resistance plates are used to change the flow through the orifice so that several points can be obtained for the orifice calibration curve. The following procedure outlines the steps to calibrate the orifice transfer standard in the laboratory.]

11.2.1.1 Record the room temperature (T_1 in °C) and barometric pressure (P_b in mm Hg) on the Orifice Calibration Data Sheet (see Figure 6). Calculate the room temperature in K (absolute temperature) and record on Orifice Calibration Data Sheet.

$$T_1 \text{ in K} = 273° + T_1 \text{ in } °C$$

11.2.1.2 Set up laboratory orifice calibration equipment as illustrated in Figure 5. Check the oil level of the rootsmeter prior to starting. There are 3 oil level indicators, 1 at the clear plastic end and 2 site glasses, 1 at each end of the measuring chamber.

11.2.1.3 Check for leaks by clamping both manometer lines, blocking the orifice with cellophane tape, turning on the high volume motor, and noting any change in the rootsmeter's reading. If the rootsmeter's reading changes, there is a leak in the system. Eliminate the leak before proceeding. If the rootsmeter's reading remains constant, turn off the hi-vol motor, remove the cellophane tape, and unclamp both manometer lines.

11.2.1.4 Install the 5-hole resistance plate between the orifice and the filter adapter.

11.2.1.5 Turn manometer tubing connectors 1 turn counter-clockwise. Make sure all connectors are open.

11.2.1.6 Adjust both manometer midpoints by sliding their movable scales until the zero point corresponds with the meniscus. Gently shake or tap to remove any air bubbles and/or liquid remaining on tubing connectors. (If additional liquid is required for the water manometer, remove tubing connector and add clean water.)

11.2.1.7 Turn on the high volume motor and let it run for 5 minutes to set the motor brushes. Turn the motor off. Insure manometers are set to zero. Turn the high volume motor on.

11.2.1.8 Record the time, in minutes, required to pass a known volume of air (approximately 200 to 300 ft^3 of air for each resistance plate) through the rootsmeter by using the rootsmeter's digital volume dial and a stopwatch.

11.2.1.9 Record both manometer readings-orifice water manometer (ΔH) and rootsmeter mercury manometer (ΔP) on Orifice Calibration Data Sheet (see Figure 6).

[Note: ΔH is the sum of the difference from zero (0) of the two column heights.]

11.2.1.10 Turn off the high volume motor.

11.2.1.11 Replace the 5-hole resistance plate with the 7-hole resistance plate.

11.2.1.12 Repeat Sections 11.2.1.3 through 11.2.1.11.

11.2.1.13 Repeat for each resistance plate. Note results on Orifice Calibration Data Sheet (see Figure 6). Only a minute is needed for warm-up of the motor. Be sure to tighten the orifice enough to eliminate any leaks. Also check the gaskets for cracks.

[Note: The placement of the orifice prior to the rootsmeter causes the pressure at the inlet of the rootsmeter to be reduced below atmospheric conditions, thus causing the measured volume to be incorrect. The volume measured by the rootsmeter must be corrected.]

11.2.1.14 Correct the measured volumes on the Orifice Calibration Data Sheet:

$$V_{std} = V_m \left(\frac{P_a - \triangle P}{P_{std}}\right)\left(\frac{T_{std}}{T_a}\right)$$

where:

V_{std} = standard volume, std m^3
V_m = actual volume measured by the rootsmeter, m^3
P_a = barometric pressure during calibration, mm Hg
$\triangle P$ = differential pressure at inlet to volume meter, mm Hg
P_{std} = 760 mm Hg
T_a = ambient temperature during calibration, K.

11.2.1.15 Record standard volume on Orifice Calibration Data Sheet.

11.2.1.16 The standard flow rate as measured by the rootsmeter can now be calculated using the following formula:

$$Q_{std} = \frac{V_{std}}{\theta}$$

where:

Q_{std} = standard volumetric flow rate, std m^3/min
θ = elapsed time, min

11.2.1.17 Record the standard flow rates to the nearest 0.01 std m^3/min.

11.2.1.18 Calculate and record $\sqrt{\triangle H \ (P_1/P_{std})(298/T_1)}$ value for each standard flow rate.

11.2.1.19 Plot each $\sqrt{\triangle H \ (P_1/P_{std})(298/T_1)}$ value (y-axis) versus its associated standard flow rate (x-axis) on arithmetic graph paper and draw a line of best fit between the individual plotted points.

[<u>Note</u>: This graph will be used in the field to determine standard flow rate.]

11.2.2 Calibration of the High Volume Sampling System Utilizing Calibrated Orifice Transfer Standard

For this calibration procedure, the following conditions are assumed in the field:

- The sampler is equipped with an valve to control sample flow rate.
- The sample flow rate is determined by measuring the orifice pressure differential, using a magnehelic gauge.
- The sampler is designed to operate at a standardized volumetric flow rate of 8 ft^3/min (0.225 m^3/min), with an acceptable flow rate range within 10 percent of this value.
- The transfer standard for the flow rate calibration is an orifice device. The flow rate through the orifice is determined by the pressure drop caused by the orifice and is measured using a "U" tube water manometer or equivalent.
- The sampler and the orifice transfer standard are calibrated to standard volumetric flow rate units (scfm or scmm).

- An orifice transfer standard with calibration traceable to NIST is used.
- A "U" tube water manometer or equivalent, with a 0- to 16-inch range and a maximum scale division of 0.1 inch, will be used to measure the pressure in the orifice transfer standard.
- A magnehelic gauge or equivalent, with a 9- to 100-inch range and a minimum scale division of 2 inches for measurements of the differential pressure across the sampler's orifice is used.
- A thermometer capable of measuring temperature over the range of 32° to 122°F (0° to 50°C) to ±2°F (±1°C) and referenced annually to a calibrated mercury thermometer is used.
- A portable aneroid barometer (or equivalent) capable of measuring ambient barometric pressure between 500 and 800 mm Hg (19.5 and 31.5 in. Hg) to the nearest mm Hg and referenced annually to a barometer of known accuracy is used.
- Miscellaneous handtools, calibration data sheets or station log book, and wide duct tape are available.

11.2.2.1 Monitor the airflow through the sampling system with a venturi/Magnehelic assembly, as illustrated in Figure 7. Set up the calibration system as illustrated in Figure 7. Audit the field sampling system once per quarter using a flow rate transfer standard, as described in the EPA *High Volume-Sampling Method, 40 CVR 50, Appendix B*. Perform a single-point calibration before and after each sample collection, using the procedures described in Section 11.2.3.

11.2.2.2 Prior to initial multi-point calibration, place an empty glass cartridge in the sampling head and activate the sampling motor. Fully open the flow control valve and adjust the voltage variator so that a sample flow rate corresponding to 110 percent of the desired flow rate (typically 0.20 to 0.28 m^3/min) is indicated on the Magnehelic gauge (based on the previously obtained multipoint calibration curve). Allow the motor to warm up for 10 minutes and then adjust the flow control valve to achieve the desire flow rate. Turn off the sampler. Record the ambient temperature and barometric pressure on the Field Calibration Data Sheet (see Figure 8).

11.2.2.3 Place the orifice transfer standard on the sampling head and attach a manometer to the tap on the transfer standard, as illustrated in Figure 7. Properly align the retaining rings with the filter holder and secure by tightening the three screw clamps. Connect the orifice transfer standard by way of the pressure tap to a manometer using a length of tubing. Set the zero level of the manometer or magnehelic. Attach the magnehelic gauge to the sampler venturi quick release connections. Adjust the zero (if needed) using the zero adjust screw on face of the gauge.

11.2.2.4 To leak test, block the orifice with a rubber stopper, wide duct tape, or other suitable means. Seal the pressure port with a rubber cap or similar device. Turn on the sampler.

<u>Caution</u>: *Avoid running the sampler from too long a time with the orifice blocked. This precaution will reduce the chance that the motor will be overheated due to the lack of cooling air. Such overheating can shorten the life of the motor*.

11.2.2.5 Gently rock the orifice transfer standard and listen for a whistling sound that would indicate a leak in the system. A leak-free system will not produce an upscale response on the sampler's magnehelic. Leaks are usually caused either by damaged or missing gaskets by cross-threading and/or not screwing sample cartridge together tightly. All leaks must be eliminated before proceeding with the calibration. When the sample is determined to be leak-free, turn off the sampler and unblock the orifice. Now remove the rubber stopper or plug from the calibrator orifice.

11.2.2.6 Turn the flow control valve to the fully open position and turn the sampler on. Adjust the flow control valve until a Magnehelic reading of approximately 70 in. is obtained. Allow the Magnehelic and manometer readings to stabilize and record these values on the Field Calibration Data Sheet (see Figure 8).

11.2.2.7 Record the manometer reading under Y1 and the Magnehelic reading under Y2 on the Field Calibration Data Sheet. For the first reading, the Magnehelic should still be at 70 inches as set above.

11.2.2.8 Set the magnehelic to 60 inches by using the sampler's flow control valve. Record the manometer (Y1) and Magnehelic (Y2) readings on the Field Calibration Data Sheet.

11.2.2.9 Repeat the above steps using Magnehelic settings of 50, 40, 30, 20, and 10 inches.

11.2.2.10 Turn the voltage variator to maximum power, open the flow control valve, and confirm that the Magnehelic reads at least 100 inches. Turn off the sampler and confirm that the magnehelic reads zero.

11.2.2.11 Read and record the following parameters on the Field Calibration Data Sheet. Record the following on the calibration data sheet:

Data, job number, and operator's signature;

- Sampler serial number;
- Ambient barometric pressure; and
- Ambient temperature.

11.2.2.12 Remove the "dummy" cartridge and replace with a sample cartridge.

11.2.2.13 Obtain the Manufacturer High Volume Orifice Calibration Certificate.

11.2.2.14 If not performed by the manufacturer, calculate values for each calibrator orifice static pressure (Column 6, inches of water) on the manufacturer's calibration certificate using the following equation:

$$\sqrt{\triangle H(P_a/760)(298/[T_a + 273])}$$

where:

P_a = the barometric pressure (mm Hg) at time of manufacturer calibration, mm Hg
T_a = temperature at time of calibration, °C

11.2.2.15 Perform a linear regression analysis using the values in Column 7 of the manufacturer High Volume Orifice Calibration Certificate for flow rate (Q_{STD}) as the "X" values and the calculated values as the Y values. From this relationship, determine the correlation (CC1), intercept (B1), and slope (M1) for the Orifice Transfer Standard.

11.2.2.16 Record these values on the Field Calibration Data Sheet (see Figure 8).

11.2.2.17 Using the Field Calibration Data Sheet values (see Figure 8), calculate the Orifice Manometer Calculated Values (Y3) for each orifice manometer reading using the following equation:

<u>Y3 Calculation</u>

$$Y3 = [Y1(P_a/760)(298/\{T_a + 273\})]^{1/2}$$

11.2.2.18 Record the values obtained in Column Y3 on the Field Calibration Data Sheet (see Figure 8).

11.2.2.19 Calculate the Sampler Magnehelic Calculate Values (Y4) using the following equation:

<u>Y4 Calculation</u>

$$Y4 = [Y2(P_a/760)(298/\{T_a + 273\})]^{1/2}$$

11.2.2.20 Record the value obtained in Column Y4 on the Field Calibration Data Sheet (see Figure 8).

11.2.2.21 Calculate the Orifice Flow Rate (X1) in scm, using the following equation:

<u>X1 Calculation</u>

$$X1 = \frac{Y3 - B1}{M1}$$

11.2.2.22 Record the values obtained in Column X1, on the Field Calibration Data Sheet (see Figure 8).

11.2.2.23 Perform a linear regression of the values in Column X1 (as X) and the values in Column Y4 (as Y). Record the relationship for correlation (CC2), intercept (B2), and slope (M2) on the Field Calibration Data Sheet.

11.2.2.24 Using the following equation, calculate a set point (SP) for the manometer to represent a desired flow rate:

$$\text{Set point (SP)} = [(\text{Expected } P_a)/(\text{Expected } T_a)(T_{std}/P_{std})][\text{M2 (Desired flow rate)} + \text{B2}]^2$$

where:

P_a = Expected atmospheric pressure (P_a), mm Hg
T_a = Expected atmospheric temperature (T_a), °C
M2 = Slope of developed relationship
B2 = Intercept of developed relationship
T_{std} = Temperature standard, 25°C
P_{std} = Pressure standard, 760 mm Hg

11.2.2.25 During monitoring, calculate a flow rate from the observed Magnehelic reading using the following equations:

$$Y5 = [\text{Average Magnehelic Reading } (\Delta H)\ (P_a/T_a)(T_{std}/P_{std})]^{1/2}$$

$$X2 = \frac{Y5 - B2}{M2}$$

where:

Y5 = Corrected Magnehelic reading
X2 = Instant calculated flow rate, scm

11.2.2.26 The relationship in calibration of a sampling system between Orifice Transfer Standard and flow rate through the sampler is illustrated in Figure 9.

11.2.3 Single-Point Audit of the High Volume Sampling System Utilizing Calibrated Orifice Transfer Standard

Single point calibration checks are required as follows:

- Prior to the start of each 24-hour test period.
- After each 24-hour test period. The post-test calibration check may serve as the pre-test calibration check for the next sampling period if the sampler is not moved.
- Prior to sampling after a sample is moved.

For samplers, perform a calibration check for the operational flow rate before each 24-hour sampling event and when required as outlined in the user quality assurance program. The purpose of this check is to track the sampler's calibration stability. Maintain a control chart presenting the percentage difference between a sampler's indicated and measured flow rates. This chart provides a quick reference of sampler flow-rate drift problems and is useful for tracking the performance of the sampler. Either the sampler log book or a data sheet will be used

to document flowcheck information. This information includes, but is not limited to, sampler and orifice transfer standard serial number, ambient temperature, pressure conditions, and collected flow-check data.

In this subsection, the following is assumed:

- The flow rate through a sampler is indicated by the orifice differential pressure;
- Samplers are designed to operate at an actual flow rate of 8 scfm, with a maximum acceptable flow-rate fluctuation range of ±10 percent of this value;
- The transfer standard will be an orifice device equipped with a pressure tap. The pressure is measured using a manometer; and
- The orifice transfer standard's calibration relationship is in terms of standard volumetric flow rate (Q_{std}).

11.2.3.1 Perform a single point flow audit check before and after each sampling period utilizing the Calibrated Orifice Transfer Standard (see Section 11.2.1).

11.2.3.2 Prior to single point audit, place a "dummy" glass cartridge in the sampling head and activate the sampling motor. Fully open the flow control valve and adjust the voltage variator so that a sample flow rate corresponding to 110 percent of the desired flow rate (typically 0.19 to 0.28 m^3/min) is indicated on the Magnehelic gauge (based on the previously obtained multipoint calibration curve). Allow the motor to warm up for 10 minutes and then adjust the flow control valve to achieve the desired flow rate. Turn off the sampler. Record the ambient temperature and barometric pressure on a Field Test Data Sheet (see Figure 10).

11.2.3.3 Place the flow rate transfer standard on the sampling head.

11.2.3.4 Properly align the retaining rings with the filter holder and secure by tightening the 3 screw clamps. Connect the flow rate transfer standard to the manometer using a length of tubing.

11.2.3.5 Using tubing, attach 1 manometer connector to the pressure tap of the transfer standard. Leave the other connector open to the atmosphere.

11.2.3.6 Adjust the manometer midpoint by sliding the movable scale until the zero point corresponds with the water meniscus. Gently shake or tap to remove any air bubbles and/or liquid remaining on tubing connectors. (If additional liquid is required, remove tubing connector and add clean water.)

11.2.3.7 Turn on high-volume motor and let run for 5 minutes.

11.2.3.8 Record the pressure differential indicated, ΔH, in inches of water, on the Field Test Data Sheet. Be sure stable ΔH has been established.

11.2.3.9 Record the observed Magnahelic gauge reading, in inches of water, on the Field Test Data Sheet. Be sure stable ΔM has been established.

11.2.3.10 Using previous established Orifice Transfer Standard curve, calculate Q_{xs} (see Section 11.2.2.23).

11.2.3.11 This flow should be within ±10 percent of the sampler set point, normally, 8 ft^3. If not, perform a new multipoint calibration of the sampler.

11.2.3.12 Remove Flow Rate Transfer Standard and dummy adsorbent cartridge.

11.3 Sample Collection

11.3.1 General Requirements

11.3.1.1 The sampler should be located in an unobstructed area, at least 2 meters from any obstacle to air flow. The exhaust hose should be stretched out in the downwind direction to prevent recycling of air into the sample head.

11.3.1.2 All cleaning and sample module loading and unloading should be conducted in a controlled environment, to minimize any chance of potential contamination.

11.3.1.3 When new or when using the sampler at a different location, all sample contact areas need to be cleared. Use triple rinses of reagent grade hexane or methylene chloride contained in Teflon® rinse bottles. Allow the solvents to evaporate before loading the PUF modules.

11.3.2 Preparing Cartridge for Sampling

11.3.2.1 Detach the lower chamber of the cleaned sample head. While wearing disposable, clean, lint-free nylon, or powder-free surgical gloves, remove a clean glass adsorbent module from its shipping container. Remove the Teflon® end caps. Replace the end caps in the sample container to be reused after the sample has been collected.

11.3.2.2 Insert the glass module into the lower chamber and tightly reattach the lower chambers to the module.

11.3.2.3 Using clean rinsed (with hexane) Teflon-tipped forceps, carefully place a clean conditioned fiber filter atop the filter holder and secure in place by clamping the filter holder ring over the filter. Place the aluminum protective cover on top of the cartridge head. Tighten the 3 screw clamps. Ensure that all module connections are tightly assembled. Place a small piece of aluminum foil on the ball-joint of the sample cartridge to protect from back-diffusion of semi-volatile into the cartridge during transporting to the site.

[Note: Failure to do so could result in air flow leaks at poorly sealed locations which could affect sample representativeness.]

11.3.2.4 Place in a carrying bag to take to the sampler.

11.3.3 Collection

11.3.3.1 After the sampling system has been assembled, perform a single point flow check as described in Sections 11.2.3.

11.3.3.2 With the empty sample module removed from the sampler, rinse all sample contact areas using reagent grade hexane in a Teflon® squeeze bottle. Allow the hexane to evaporate from the module before loading the samples.

11.3.3.3 With the sample cartridge removed from the sampler and the flow control valve fully open, turn the pump on and allow it to warm-up for approximately 5 minutes.

11.3.3.4 Attach a "dummy" sampling cartridge loaded with the exact same type of filter and PUF media to be used for sample collection.

11.3.3.5 Turn the sampler on and adjust the flow control valve to the desired flow as indicated by the Magnehelic gauge reading determined in Section 11.2.2.24. Once the flow is properly adjusted, take extreme care not to inadvertently alter its setting.

11.3.3.6 Turn the sampler off and remove both the "dummy" module. The sampler is now ready for field use.

11.3.3.7 Check the zero reading of the sampler Magnehelic. Record the ambient temperature, barometric pressure, elapsed time meter setting, sampler serial number, filter number, and PUF cartridge number on the Field Test Data Sheet (see Figure 10). Attach the loaded sampler cartridge to the sampler.

11.3.3.8 Place the voltage variator and flow control valve at the settings used in Section 11.3.2, and the power switch. Activate the elapsed time meter and record the start time. Adjust the flow (Magnehelic setting), if necessary, using the flow control valve.

11.3.3.9 Record the Magnehelic reading every 6 hours during the sampling period. Use the calibration factors (see Section 11.2.2.23) to calculate the desired flow rate. Record the ambient temperature, barometric pressure, and Magnehelic reading at the beginning and during sampling period.

11.3.4 Sample Recovery

11.3.4.1 At the end of the desired sampling period, turn the power off. Carefully remove the sampling head containing the filter and adsorbent cartridge to a clean area.

11.3.4.2 While wearing disposable lint free nylon or surgical gloves, remove the PUF cartridge from the lower module chamber and lay it on the retained aluminum foil in which the sample was originally wrapped.

11.3.4.3 Carefully remove the glass fiber filter from the upper chamber using clean Teflon®-tipped forceps.

11.3.4.4 Fold the filter in half twice (sample side inward) and place it in the glass cartridge atop the PUF.

11.3.4.5 Wrap the combined samples in the original hexane rinsed aluminum foil, attached Teflon® end caps and place them in their original aluminum sample container. Complete a sample label and affix it to the aluminum shipping container.

11.3.4.6 Chain-of-custody should be maintained for all samples. Store the containers at <4°C and protect from light to prevent possibly photo-decomposition of collected analytes. If the time span between sample collection and laboratory analysis is to exceed 24 hours, refrigerate sample.

11.3.4.7 Perform a final calculated sample flow check using the calibration orifice, as described in Section 11.3.2. If calibration deviates by more than 10 percent from the initial reading, mark the flow data for that sample as suspect and inspect and/or remove from service.

11.3.4.8 Return at least 1 field filter/PUF blank to the laboratory with each group of samples. Treat a field blank exactly as the sample except that no air is drawn through the filter/adsorbent cartridge assembly.

11.3.4.9 Ship and store samples under ice (<4°C) until receipt at the analytical laboratory, after which it should be refrigerated at less than or equal to 4°C. Extraction must be performed within seven days of sampling and analysis within 40 days after extraction.

12. Sample Preparation

12.1 Extraction Procedure for Quartz Fiber Filters and PUF Plugs

12.1.1 Take the glass sample cartridge containing the PUF plug and quartz fiber filter out of the shipping container and place it in a 43-mm x 123-mm Soxhlet extractor. Add 10 μL of $^{13}C_{12}$-labeled sample fortification solution (see Table 4) to the sample. Put the thimble into a 50 mm Soxhlet extractor fitted with a 500 mL boiling flask containing 275 mL of benzene.

[Note: While the procedure specifies benzene as the extraction solution, many laboratories have substituted toluene for benzene because of the carcinogenic nature of benzene (28). The EPA is presently studying the replacement of benzene with toluene.]

12.1.2 Place a small funnel in the top of the Soxhlet extractor, making sure that the top of the funnel is inside the thimble. Rinse the inside of the corresponding glass cylinder into the thimble using approximately 25 mL of benzene. Place the extractor on a heating mantel. Adjust the heat until the benzene drips at a rate of 2 drops per second and allow to flow for 16 hours. Allow the apparatus to cool.

12.1.3 Remove the extractor and place a 3-bulb Snyder column onto the flask containing the benzene extract. Place on a heating mantel and concentrate the benzene to 25 mL (do not let go to dryness). Add 100 ml of hexane and again concentrate to 25 mL. Add a second 100 mL portion of hexane and again concentrate to 25 mL.

12.1.4 Let cool and add 25 mL hexane. The extract is ready for acid/base cleanup at this point.

12.2 Cleanup Procedures

12.2.1 Acid/Base Cleanup. Transfer the hexane extract to a 250 mL separatory funnel with two 25-mL portions of hexane. Wash the combined hexane with 30 ml of 2 N potassium hydroxide. Allow layers to separate and discard the aqueous layer. Repeat until no color is visible in the aqueous layer, up to a maximum of 4 washes. Partition the extract against 50 ml of 5% sodium chloride solution. Discard the aqueous layer. Carefully add 50 mL of concentrated sulfuric acid. Shake vigorously for 1 minute, allow layers to separate, and discard the acid layer. Repeat the acid wash until no color is visible in the aqueous layer, up to a maximum of 4 washes. Partition the extract against 50 ml of 5% sodium chloride solution. Discard the aqueous layer. Transfer the hexane through a 42-mm x 160-mm filter funnel containing a plug of glass wool and 3-cm of sodium sulfate into a 250-mL Kuderna-Danish (KD) concentrator fitter with a 15-mL catch tube. Rinse the filter funnel with two 25 mL portions of hexane. Place a 3-bulb Snyder column on the KD concentrator and concentrate on a steam bath to 1-2 mL. The extract is ready for the alumina column cleanup at this point, but it can be sealed and stored in the dark, if necessary. An extract that contains obvious contamination, such as yellow or brown color, is subjected to the silica column cleanup prior to the alumina cleanup.

12.2.2 Silica Column Preparation. Gently tamp a plug of glass wool into the bottom of a 5.75-inch (14.6 cm) disposable Pasteur pipette. Pour prewashed 100-200 mesh Bio-Sil®A (silica gel) into the pipette until a height of 3.0 cm of silica gel is packed into the column. Top the silica gel with 0.5 cm of anhydrous granular sodium sulfate. Place columns in an oven set at 220°C. Store columns in the oven until ready for use, at least overnight. Remove only the columns needed and place them in a desiccator until they have equilibrated to room temperature. Use immediately.

12.2.3 Silica Column Cleanup. Position the silica column over the alumina column so the eluent will drip onto the alumina column. Transfer the 2 mL hexane extract from the Acid/Base Cleanup onto the silica column with two separate 0.5-mL portions of hexane. Elute the silica column with an additional 4.0 mL of hexane. Discard the silica column and proceed with the alumina column cleanup at the point where the column is washed with 6.0 mL of carbon tetrachloride.

12.2.4 Alumina Column Preparation. Gently tamp a plug of glass wool into the bottom of a 5.75-inch (14.6 cm) disposable Pasteur pipette. Pour WOELM neutral alumina into the pipette while tapping the column with a pencil or wooden dowel until a height of 4.5 cm of alumina is packed into the column. Top the alumina with a 0.5 cm of anhydrous granular sodium sulfate. Prewash the column with 3 mL dichloromethane. Allow the dichloromethane to drain from the column; then force the remaining dichloromethane from the column with a stream of dry nitrogen. Place prepared columns in an oven set at 225°C. Store columns in the oven until ready for use, at least overnight. Remove only columns needed and place them in a desiccator over anhydrous calcium sulfate until they have equilibrated to room temperature. Use immediately.

12.2.5 Alumina Column Cleanup. Prewet the alumina column with 1 mL of hexane. Transfer the 2 mL hexane extract from acid/base cleanup into the column. Elute the column with 6.0 mL of carbon tetrachloride and archive. Elute the column with 4.0 mL of dichloromethane and catch the eluate in a 12- mL distillation receiver. Add 3 μL tetradecane, place a micro-Snyder column on the receiver and evaporate the dichloromethane just to dryness by means of a hot water bath. Add 2 mL of hexane to the receiver and evaporate just to dryness. Add another 2-mL portion of hexane and evaporate to 0.5 mL. The extract is ready for the carbon column cleanup at this point.

12.2.6 Carbon Column Preparation. Weigh 9.5 g of Bio-Sil®A (100-200 mesh) silica gel, which has been previously heated to 225°C for 24 hours, into a 50-mL screw cap container. Weigh 0.50 g of Amoco PX-21 carbon onto the silica gel cap and shake vigorously for 1 hour. Just before use, rotate the container by hand for at least 1 minute. Break a glass graduated 2.0-mL disposal pipette at the 1.8 mL mark and fire polish the end. Place a small plug of glass wool in the pipette and pack it at the 0.0 mL mark using two small solid glass rods. Add 0.1 mL of Bio-Sil®A 100-200 mesh silica gel. If more than 1 column is to be made at a time, it is best to

add the silica gel to all the columns and then add the carbon-silica gel mixture to all columns. Add 0.40 mL of the carbon silica gel mixture to the column; the top of the mixture will be at the 0.55-mL mark on the pipette. Top the column with a small plug of glass wool.

12.2.7 Carbon Column Cleanup. Place the column in a suitable clamp with the silica gel plug up. Add approximately 0.5 mL of 50 percent benzene-methylene chloride (v/v) to the top of the column. Fit a 10 mL disposable pipette on the top of the carbon column with a short piece of extruded teflon tubing. Add an additional 9.5 mL of the 50 percent benzene-methylene chloride. When approximately 0.5 mL of this solvent remains, add 10 mL of toluene. After all the toluene has gone into the column, remove the 10-mL reservoir and add at least 2.0 mL of hexane to the column. When approximately 0.1 mL of the hexane is left on the top of the column, transfer the sample extract onto the column with a Pasteur pipette. Rinse the distillation receiver column that contained the extract with two separate 0.2 mL portions of hexane and transfer each rinse onto the column. Allow the top of each transfer layer to enter the glass wool before adding the next one. When the last of the transfer solvent enters the glass wool, add 0.5 mL of methylene chloride, replace the 10-mL reservoir, and add 4.5 mL of methylene chloride to it. When approximately 0.5 mL of this solvent remains, add 10 mL of 50 percent benzene-methylene chloride. When all this solvent has gone onto the column, remove the reservoir, take the column out of the holder and rinse each end with toluene, turn the column over, and put it back in the holder. All previous elution solvents are archived. Place a suitable receiver tube under the column and add 0.5 mL of toluene to the top of the column. Fit the 10 mL reservoir on the column and add 9.5 mL of toluene to it. When all toluene has eluted through the column and has been collected in the receiving tube, add 5 mL of tetradecane and concentrate to 0.5 mL using a stream of nitrogen and water bath maintained at 60°C. Transfer the toluene extract to a 2.0 mL graduated Chromoflex® tube with two 0.5-mL portions of benzene. Add 0.5 ng of $^{13}C_{12}$-1,2,3,4-TCDD and store the extracts in the dark at room temperature. Concentrate the extract to 30 μL using a stream of nitrogen at room temperature just prior to analysis or shipping. Transfer the extracts that are to be shipped to a 2 mm i.d. x 75 mm glass tube that has been fire sealed on one end with enough benzene to bring the total volume of the extract to 100 μL. Then fire seal other end of the tube.

12.3 Glassware Cleanup Procedures

In this procedure, take each piece of glassware through the cleaning separately except in the oven baking process. Wash the 100-mL round bottom flasks, the 250 mL separatory funnels, the KD concentrators, etc., that were used in the extraction procedures three times with hot tap water, two times with acetone and two times with hexane. Then bake this glassware in a forced air oven that is vented to the outside for 16 hours at 450°C. Clean the PFTE stopcocks as above except for the oven baking step. Rinse all glassware with acetone and hexane immediately before use.

13. HRGC-HRMS System Performance

13.1 Operation of HRGC-HRMS

Operate the HRMS in the electron impact (EI) ionization mode using the selected ion monitoring (SIM) detection technique. Achieve a static mass resolution of 10,000 (10% valley) before analysis of a set of samples is begun. Check the mass resolution at the beginning and at the end of each day. (Corrective actions should be implemented whenever the resolving power does not meet the requirement.) Chromatography time required for PCDDs and PCDFs may exceed the long-term stability of the mass spectrometer because the instrument is operated in the high-resolution mode and the mass drifts of a few ppm (e.g., 5 ppm in mass) can have adverse effects on the analytical results. Therefore, a mass-drift correction may be required. Use a lock-mass ion for the reference

compound perfluorokerosene (PFK) to tune the mass spectrometer. The selection of the SIM lock-mass ions of PFK shown in the descriptors (see Tables 10, 11 and 12) is dependent on the masses of the ions monitored within each descriptor. An acceptable lock-mass ion at any mass between the lightest and heaviest ion in each descriptor can be used to monitor and correct mass drifts. Adjust the level of the reference compound (PFK) metered inside the ion chamber during HRGC-HRMS analyses so that the amplitude of the most intense selected lock-mass ion signal is kept to a minimum. Under those conditions, sensitivity changes can be more effectively monitored. Excessive use of PFK or any reference substance will cause high background signals and contamination of the ion source, which will result in an increase in "downtime" required for instrument maintenance.

Tune the instrument to a mass resolution of 10,000 (10% valley) at m/z 292.9825 (PFK). By using the peak matching unit (manual or computer simulated) and the PFK reference peak, verify that the exact m/z 392.9761 (PFK) is within 3 parts per million (ppm) of the required value.

Document the instrument resolving power by recording the peak profile of the high mass reference signal (m/z 392.9761) obtained during the above peak matching calibration experiment by using the low mass PFK ion at m/z 292.9825 as a reference. The minimum resolving power of 10,000 should be demonstrated on the high mass ion while it is transmitted at a lower accelerating voltage than the low mass reference ion, which is transmitted at full voltage and full sensitivity. There will be little, if any, loss in sensitivity on the high mass ion if the source parameters are properly tuned and optimized. The format of the peak profile representation should allow for computer calculated and manual determination of the resolution, i.e., the horizontal axis should be a calibrated mass scale (amu or ppm per division). Detailed descriptions for mass resolution adjustments are usually found in the instrument operators manual or instructions.

13.2 Column Performance

After the HRMS parameters are optimized, analyze an aliquot of a column performance solution containing the first and last eluting compounds (see Table 9), or a solution containing all congeners, to determine and confirm SIM parameters, retention time windows, and HRGC resolution of the compounds. Adjustments can be made at this point, if necessary. Some PeCDFs elute in the TCDD retention time window when using the 60 m DB-5 column. The PeCDF masses can be included with the TCDD/TCDF masses in Descriptor 1. Include the PeCDD/PeCDF masses with the TCDD/TCDF masses when using the 60 m SP-2331 polar column. The HRGC-HRMS SIM parameters and retention time windows can be rapidly and efficiently determined and optimized by analysis of a window defining solution of PCDDs/PCDFs using one mass for each isomer for the complete analysis of tetra- through octa- compounds, as illustrated in Figure 11.

13.3 SIM Cycle Time

The total time for each SIM cycle should be 1 second or less for data acquisition, which includes the sum of the mass ion dwell times and ESA voltage reset times.

13.4 Peak Separation

Chromatographic peak separation between 2,3,7,8-TCDD and the co-eluting isomers should be resolved with a valley of 25% or more (see Figure 12).

13.5 Initial Calibration

After the HRGC-HRMS SIM operating conditions are optimized, perform an initial calibration using the 5 calibration solutions shown in Table 3. The quantification relationships of labeled and unlabeled standards are illustrated in Tables 15, 16, 17, and 18. Figures 13 through 22 represent the extracted ion current profiles (EICP) for specific masses for 2,3,7,8-TCDF, 2,3,7,8-TCDD and other 2,3,7,8-substituted PCDF/PCDD (along with their labeled standards) through OCDF and OCDD respectively.

[Note: Other solutions containing fewer or different congeners and at different concentrations may also be used for calibration purposes.]

Referring to Tables 10, 11, or 12, calculate (1) the relative response factors (RRFs) for each unlabeled PCDD/PCDF and PBDD/PBDF [RRF (I)] relative to their corresponding $^{13}C_{12}$-labeled internal standard and (2) the RRFs for the $^{13}C_{12}$-labeled PCDD/PCDF and PBDD/PBDF internal standards [RRF (II)] relative to $^{37}Cl_4$-2,3,7,8-TCDD recovery standard using the following formulae:

$$RRF(I) = \frac{(A_x \times Q_{is})}{(Q_x \times A_{is})}$$

$$RRF(II) = \frac{(A_{is} \times Q_{rs})}{(Q_{is} \times A_{rs})}$$

where:

A_x = the sum of the integrated ion abundances of the quantitation ions (see Tables 10, 11 or 12) for unlabeled PCDDs/PCDFs, and PBDDs/PBDFs and BCDDs/BCDFs.

A_{is} = the sum of the integrated ion abundances of the quantitation ions for the $^{13}C_{12}$-labeled internal standards (see Table 10, 11 or 12).

[Note: Other $^{13}C_{12}$-labeled analytes may also be used as the recovery standard(s)]

A_{rs} = the integrated ion abundance for the quantitation ion of the $^{37}Cl_4$-2,3,7,8-TCDD recovery standard.

Q_{is} = the quantity of the $^{13}C_{12}$-labeled internal standard injected, pg.

Q_x = the quantity of the unlabeled PCDD/PCDF analyte injected, pg.

Q_{rs} = the quantity of the $^{37}Cl_4$-2,3,7,8-TCDD injected, pg.

RRF(I) and RRF(II) = dimensionless quantities. The units used to express Q_{is} and Q_x must be the same.

[Note: $^{13}C_{12}$-1,2,3,7,8-PeBDF is used to determine the response factor for the unlabeled 2,3,7,8-substituted, PeBDD, HxBDF and HxBDD.]

Calculate the average RRFs for the 5 concentration levels of unlabeled and $^{13}C_{12}$-labeled PCDDs/PCDFs and PBDDs/PBDFs for the initial calibration using the following equation:

$$\overline{RRF} = \frac{RRF1 + RRF2 + RRF3 + RRF4 + RRF5}{5}$$

13.6 Criteria Required for Initial Calibration

The analytical data must satisfy certain criteria for acceptable calibration. The isotopic ratios must be within the acceptable range (see Tables 19 and 20). The percent relative standard deviation for the response factors should be less than the values presented in Table 21. The signal-to-noise ratio for the $^{13}C_{12}$-labeled standards must be 10:1 or more and 5:1 or more for the unlabeled standards.

13.7 Continuing Calibration

Conduct an analysis at the beginning of each day to check and confirm the calibration using an aliquot of the calibration solution. This analysis should meet the isotopic ratios and signal to noise ratios of the criteria stated in Section 13.6 (see Table 21 for daily calibration percent difference criteria). It is good practice to confirm the calibration at the end of the day also. Calculate the daily calibration percent difference using the following equation.

$$\%RRF = \frac{RRF_{cc} - \overline{RRF}}{\overline{RRF}} x\,100$$

RRF_{cc} = the relative response factor for a specific analyte in the continuing calibration standard.

14. HRGC-HRMS Analysis And Operating Parameters

14.1 Sample Analysis

Sample Analysis. An aliquot of the sample extract is analyzed with the HRGC-HRMS system using the instrument parameters illustrated in Tables 13 and 14 and the SIM descriptors and masses shown in Tables 10, 11, and 12. A 30-m SE-54 fused silica capillary column is used to determine the concentrations of total tetra-, penta-, hexa-, hepta- and octa-CDDs/CDFs and/or to determine the minimum limits of detections (MLDs) for the compounds. If the tetra-, penta-, and hexa-CDDs/CDFs were detected in a sample and isomer specific analyses are required, then an aliquot of the sample extract is analyzed using the 60 m SP-2331 fused silica capillary column to provide a concentration for each 2,3,7,8-substituted PCDD/PCDF and concentrations for total PCDDs and PCDFs also.

[Note: Other capillary columns such as the DB-5, SE-30, and DB-225 may be used if the performance satisfies the specifications for resolution of PCDDs/PCDFs. The SE-54 column resolves the four HpCDF isomers, two HpCDD isomers, OCDF and OCDD for isomer specific analysis. It does not resolve the tetra-, penta-, and hexa-2,3,7,8-substituted isomers. The SE-54 column is used for the analysis of PBDDs and PBDFs.]

Isomer specificity for all 2,3,7,8-substituted PCDDs/PCDFs cannot be achieved on a single HRGC capillary column at this time. However, many types of HRGC capillary columns are available and can be used for these analyses after their resolution capabilities are confirmed to be adequate using appropriate standards.

Two HRGC columns shown in Table 13 have been used successfully since 1984 (27, 28). The 60-m DB-5 provides an efficient analysis for total concentrations of PCDDs/PCDFs, specific isomers (total tetra-, penta-, hexa-CDDs/CDFs, four HpCDF isomers, two HpCDD isomers, OCDD and OCDF), PBDDs/PBDFs, and/or determination of MDLs. The 60 m SP-2331 column provides demonstrated and confirmed resolution of 2,3,7,8-substituted tetra-, penta-, and hexa-PCDDs/PCDFs (14). The descriptors and masses shown in Tables 10, 11 and 12 must be modified to take into account the elution of some of the PeCDDs and PeCDFs in the tetra retention time window using the SP-2331column.

14.2 Identication Criteria

Criteria used for identification of PCDDs and PCDFs in samples are as follows:

- The integrated ion abundance ratio M/(M+2) or (M+2)/(M+4) shall be within 15 percent of the theoretical value. The acceptable ion abundance ranges are shown in Tables 19 and 20.
- The ions monitored for a given analyte, shown in Tables 10, 11, and 12, shall reach their maximum within 2 seconds of each other.
- The retention time for the 2,3,7,8-substituted analytes must be within 3 seconds of the corresponding $^{13}C_{12}$-labeled internal standard, surrogate, or alternate standard.
- The identification of 2,3,7,8-substituted isomers that do not have corresponding $^{13}C_{12}$-labeled standards is done by comparison to the analysis of a standard that contains the specific congeners. Comparison of the relative retention time (RRT) of the analyte to the nearest internal standard with reference (i.e., within 0.005 RRT time units to the comparable RRTs found in the continuing calibration or literature).
- The signal-to-noise ratio for the monitored ions must be greater than 2.5.
- The analysis shall show the absence of polychlorinated diphenyl- ethers (PCDPEs). Any PCDPEs that co-elute (± 2 seconds) with peaks in the PCDF channels indicates a positive interference, especially if the intensity of the PCDPE peak is 10 percent or more of the PCDF.

Use the identification criteria in Section 14.2 to identify and quantify the PCDDs and PCDFs in the sample. Figure 23 illustrates a reconstructed EICP for an environmental sample, identifying the presence of 2,3,7,8-TCDF as referenced to the labeled standard.

14.3 Quantification

The peak areas of ions monitored for $^{13}C_{12}$-labeled PCDDs/PCDFs and $^{37}Cl_4$-2,3,7,8-TCDD, unlabeled PCDDs/PCDFs, and respective relative response factors are used for quantification. The $^{37}Cl_4$-2,3,7,8-TCDD, spiked to extract prior to final concentration, and respective response factors are used to determine the sample extraction efficiencies achieved for the nine $^{13}C_{12}$-labeled internal standards, which are spiked to the sample prior to extraction (% recovery). The $^{13}C_{12}$-labeled PCDD/PCDF internal standards and response factors are used for quantification of unlabeled PCDDs/PCDFs and for determination of the minimum limits of detection with but one exception: $^{13}C_{12}$-OCDD is used for OCDF. Each $^{13}C_{12}$-labeled internal standard is used to quantify all of the PCDDs/PCDFs in its isomeric group. For example, $^{13}C_{12}$-2,3,7,8-TCDD and the 2,3,7,8-TCDD response factor are used to quantify all of the 22 tetra-chlorinated isomers. The quantification relationships of these standards are shown in Tables 15, 16, 17, and 18. The $^{37}Cl_4$-2,3,7,8-TCDD spiked to the filter of the sampler

prior to sample collection is used to determine the sampler retention efficiency, which also indicates the collection efficiency for the sampling period.

14.4 Calculations

14.4.1 Extraction Efficiency. Calculate the extraction efficiencies (percent recovery) of the 9 $^{13}C_{12}$-labeled PCDD/PCDF or the 3 $^{13}C_{12}$-labeled PBDD/PBDF internal standards measured in the extract using the formula:

$$\%R_{is} = \frac{[A_{is} \times Q_{rs} \times 100]}{[Q_{is} \times A_{rs} \times RRF(II)]}$$

where:

$\%R_{is}$ = percent recovery (extraction efficiency).

A_{is} = the sum of the integrated ion abundances of the quantitation ions (see Tables 10, 11 or 12) for the $^{13}C_{12}$-labeled internal standard.

A_{rs} = the sum of the integrated ion abundances of the quantitation ions (see Table 10, 11 or 12) for the $^{37}Cl_4$- or $^{13}C_{12}$-labeled recovery standard; the selection of the recovery standard(s) depends on the type of homologues.

Q_{is} = quantity of the $^{13}C_{12}$-labeled internal standard added to the sample before extraction, pg.

Q_{rs} = quantity of the $^{37}Cl_4$- or $^{13}C_{12}$-labeled recovery standard added to the sample extract before HRGC-HRMS analysis, pg.

RRF(II) = calculated mean relative response factor for the labeled internal standard relative to the appropriate labeled recovery standard.

14.4.2 Calculation of Concentration. Calculate the concentration of each 2,3,7,8-substituted PCDD/PCDF, other isomers or PBDD/PBDF that have met the criteria described in Sections 14.2 using the following formula:

$$C_x = \frac{[A_x \times Q_{is}]}{[A_{is} \times V_{std} \times RRF(I)]}$$

where:

C_x = concentration of unlabeled PCDD/PCDF, PBDD/PBDF or BCDD/BCDF congener(s), pg/m^3.

A_x = the sum of the integrated ion abundances of the quantitation ions (see Table 11, 12 or 13) for the unlabeled PCDDs/PCDFs, or PBDDs/PBDFs or BCDFs.

A_{is} = the sum of the integrated ion abundances of the quantitation ions (see Table 11, 12 or 13) for the respective $^{13}C_{12}$-labeled internal standard.

Q_{is} = quantity of the $^{13}C_{12}$-labeled internal standard added to the sample before extraction, pg.

V_{std} = standard volume of air, std m^3.

RRF(I) = calculated mean relative response factor for an unlabeled 2,3,7,8-substituted PCDD/PCDF obtained in Section 13.4.

14.5 Method Detection Limits (MDLs)

The ambient background levels of total PCDDs/PCDFs are usually found in the range of 0.3 to 2.9 pg/m^3. Therefore, the MDLs required to generate meaningful data for ambient air should be in the range of 0.02 to 0.15 pg/m^3 for tetra-, penta-, and hexa-CDDs/CDFs. Trace levels, 0.05 to 0.25 pg/m^3, of HpCDDs and OCDD are usually detected in the method blank (background contamination).

An MDL is defined as the amount of an analyte required to produce a signal with a peak area at least 2.5 x the area of the background signal level measured at the retention time of interest. MDLs are calculated for total PHDDs/PHDFs and for each 2,3,7,8-substituted congener. The calculation method used is dependent upon the type of signal responses present in the analysis. For example:

- Absence of response signals of one or both quantitation ion signals at the retention time of the 2,3,7,8-substituted isomer or at the retention time of non 2,3,7,8-substituted isomers. The instrument noise level is measured at the analyte's expected retention time and multiplied by 2.5, inserted into the formula below and calculated and reported as not detected (ND) at the specific MDL.
- Response signals at the same retention time as the 2,3,7,8-substituted isomers or the other isomers that have a S/N ratio in excess of 2.5:1 but that do not satisfy the identification criteria described in 14.2 are calculated and reported as ND at the elevated MDL and discussed in the narrative that accompanies the analytical results. Calculate the MDLs using the following formula:

$$MDL = \frac{[2.5 \times A_x \times Q_{is}]}{[A_{is} \times V_{std} \times \overline{RRF}]}$$

where:

MDL = concentration of unlabeled PHDD/PHDF, pg/m^3.

A_x = sum of integrated ion abundances of the quantitation ions (see Table 10, 11 or 12) for the unlabeled PHDDs/PHDFs which do not meet the identification criteria or 2.5 x area of noise level at the analyte's retention time.

A_{is} = sum of the integrated ion abundances of the quantitation ions (see Table 10, 11, or 12) for the $^{13}C_{12}$-labeled internal standards.

Q_{is} = quantity of the $^{13}C_{12}$-labeled internal standard spiked to the sample prior to extraction, pg.

V_{std} = standard volume of ambient air sampled, std m^3.

$\overline{RRF}$ = mean relative response factor for the unlabeled PHDD/PHDF.

14.6 2,3,7,8-TCDD Toxic Equivalents

Calculate the 2,3,7,8-TCDD toxic equivalents of PCDDs and PCDFs present in a sample according to the method recommended by EPA and the Center for Disease Control (18). This method assigns a 2,3,7,8-TCDD toxicity equivalency factor (TEF) for each of the seventeen 2,3,7,8-substituted PCDDs/PCDFs (see Table 22). The 2,3,7,8-TCDD equivalent of the PCDDs and PCDFs present in the sample is calculated by the respective TEF factors times their concentration for each of the compounds listed in Table 22. The exclusion of the other isomeric groupings (mono-, di-, and tri-chlorinated dibenzodioxins and dibenzofurans) does not mean that they are non-toxic. Their toxicity, as known at this time, is much less than the toxicity of the compounds listed in Table 22. The above procedure for calculating the 2,3,7,8-TCDD toxic equivalents is not claimed to be based on a

thoroughly established scientific foundation. The procedure, rather, represents a "consensus recommendation on science policy." Similar methods are used throughout the world.

15. Quality Assurance/Quality Control (QA/QC)

15.1 Certified analytical standards were obtained from Cambridge Isotope Laboratories, 50 Frontage Road, Andover, MA 01810, 508-749-8000.

15.2 Criteria used for HRGC-HRMS initial and continuing calibration are defined in Sections 13.5 and 13.6.

15.3 Analytical criteria used for identification purposes are defined in Section 14.2.

15.4 All test samples, method blanks, field blanks, and laboratory control samples are spiked with $13C_{12}$-labeled internal standards prior to extraction.

15.5 Sample preparation and analysis and evaluation of data are performed on a set of 12 samples, which may consist of 9 test samples, field blank, method blank, fortified method blank, or a laboratory control sample.

15.6 Method evaluation studies were performed to determine and evaluate the overall method capabilities (1, 2).

15.7 The $^{13}C_{12}$-1,2,3,4-TCDD solution is spiked to filters of all samplers, including field blanks, immediately prior to operation or is spiked to all PUF plugs prior to shipping them to the field for sampling to determine and document the sampling efficiency.

15.8 Minimum equipment calibration and accuracy requirements achieved are illustrated in Table 23.

15.9 QA/QC requirements for data:

Criteria	Requirements
The data shall satisfy all indicated identification criteria	Discussed in Section 14.2
Method efficiency achieved for $^{13}C_{12}$-labeled tetra-, penta-, hexa-CDDs/CDFs and PBDDs/PBDFs	50 to 120%
Method efficiency achieved for $^{13}C_{12}$-labeled HpCDD and OCDD	40 to 120%
Accuracy achieved for PHDDs and PHDFs in method spike at 0.25 to 2.0 pg/m^3 concentration range	70 to 130%
Precision achieved for duplicate method spikes or QA samples	± 30%
Sampler efficiency achieved for $^{13}C_{12}$-1,2,3,4-TCDD	50 to 120%
Method blank contamination	Free of contamination that would interfere with test sample results.
Method detection limit range for method blank and field blank (individual isomers)	0.02 to 0.25 pg/m^3

16. Report Format

The analytical results achieved for a set of 12 samples should be presented in a table such as the one shown in Table 24. The analytical results, analysis, QA/QC criteria, and requirements used to evaluate data are discussed in an accompanying analytical report. The validity of the data in regard to the data quality requirements and any qualification that may apply is explained in a clear and concise manner for the user's information.

17. References

1. Harless, R. L. et al., "Evaluation of Methodology for Determination of Polyhalogenated Dibenzo-p-Dioxins and Dibenzofurans in Ambient Air," in *Proceedings of the 1991 EPA/A&WMA International Symposium on Measurement of Toxic and Related Air Pollutants*, U. S. Environmental Protection Agency, Research Triangle Park, NC 27711, EPA-600/9-91-018, May 1991.

2. Harless, R. L., et al., "Evaluation of a Sampling and Analysis Method for Determination of Polyhalogenated Dibenzo-p-Dioxins and Dibenzofurans in Ambient Air," in *Proceedings of the 11th International Symposium on Chlorinated Dioxins and Related Compounds*, U. S. Environmental Protection Agency, Research Triangle Park, NC 27711, EPA-600/D-91-106; *Chemosphere*, Vol. 25, (7-10):1317-1322, Oct-Nov 1992.

3. Smith-Mullen, C., et al., *Feasibility of Environmental Monitoring and Exposure Assessment for a Municipal Waste Combustor, Rutland, Vermont Pilot Study*, U. S. Environmental Protection Agency, Research Triangle Park, NC 27711, EPA-600/8-91-007, March 1991.

4. Harless, R. L., et al., *Sampling and Analysis for Polychlorinated Dibenzo-p-Dioxins and Dibenzofurans in Ambient Air*, U. S. Environmental Protection Agency, Research Triangle Park, NC 27711, EPA-600/D-9-172, May 1990.

5. Harless, R. L. et al., *Analytical Procedures and Quality Assurance Plan for the Analysis of 2,3,7,8-TCDD in Tier 3-7 Samples of the U. S. EPA National Dioxin Study*, U. S. Environmental Protection Agency, Research Triangle Park, NC 27711, EPA-600/3-85-019, May 1986.

6. Harless, R. L. et al., *Analytical Procedures and Quality Assurance Plan for the Analysis of Tetra Through Octa Chlorinated Dibenzo-p-Dioxins and Dibenzofurans in Tier 4 Combustion and Incineration Processes*, U. S. Environmental Protection Agency, Research Triangle Park, NC 27711, Addendum to EPA-600/3-85-019, May 1986.

7. Albro, P.W., et al., "Methods for the Quantitative Determination of Multiple Specific Polychlorinated Dibenzo-p-Dioxins and Dibenzofuran Isomers in Human Adipose Tissue in the Parts-Per-Trillion Range. An Interlaboratory Study," *Anal. Chem*., Vol.57:2717-2725, 1985.

8. O'Keefe, P. W., et al., "Interlaboratory Validation of PCDD and PCDF Concentrations Found in Municipal Incinerator Emissions," *Chemosphere*, Vol. 18:185-192, 1989.

9. Harless, R. L., et al., "Identification of Bromo/Chloro Dibenzo-p-Dioxins and Dibenzofurans in Ash Samples," *Chemosphere*, Vol. 18:201-208, 1989.

10. Lafleur, L.E., and Dodo, G. H., "An Interlaboratory Comparison of Analytical Procedures for the Measurement of PCDDs/PCDFs in Pulp and Paper Industry Solid Wastes," *Chemosphere*, Vol. 18:77-84, 1989.

11. Patterson, D. G. et al., "Levels of Polychlorinated Dibenzo-p-Dioxins and Dibenzofurans in Workers Exposed to 2,3,7,8-TCDD," *American Journal of Industrial Medicine*, Vol. 16:135-146, 1989.

12. Lamparski, L. L. and Nestrick, T. J. "Determination of Tetra-, Hexa-, Hepta-and Octa-chlorodibenzo-p-dioxin isomers in Particulate Samples at Parts-Per-Trillion Levels," *Anal. Chem.*, Vol. 52:2045-2054, 1980.

13. Rappe, C., "Analysis of Polychlorinated Dioxins and Furans," *Environ. Sci. Technol.*, Vol. 18:78A-90A, 1984.

14. Rappe, C., et al., "Identification of PCDDs and PCDFs in Urban Air," *Chemosphere*, Vol. 17:3-20, 1988.

15. Tondeur, Y., et al., "Method 8290: An Analytical Protocol for the Multimedia Characterization of Polychlorinated Dibenzo-p-Dioxins and Dibenzofurans by High Resolution Gas Chromatography/High Resolution Mass Spectrometry," *Chemosphere*, Vol. 18:119-131, 1989.

16. "Method 23, Method for Measurement of Polychlorinated Dibenzo-p-Dioxins and Dibenzofurans from Stationary Sources," *Federal Register*, Vol. 56(30):5758-5770, February 13, 1991.

17. "Method 1613: Tetra- through Octa-Chlorinated Dioxins and Furans by Isotope Dilution HRGC-HRMS," *Federal Register*, Vol. 56(26:)5098-5122, February 7, 1991.

18. *Interim Procedures for Estimating Risks Associated with Exposures to Mixtures of Chlorinated Dibenzo-p-Dioxins and Dibenzofurans (CDDs/CDFs)*, U. S. Environmental Protection Agency, Research Triangle Park, NC 27711, EPA-625/3-89-016, March 1989.

19. Tiernan, T., et al., "PCDD/PCDF in the Ambient Air of a Metropolitan Area in the U.S.," *Chemosphere*, Vol. 19:541-546, 1989.

20. Hunt, G., "Measurement of PCDDs/PCDFs in Ambient Air," *J. Air Pollut. Control Assoc.*, Vol. 39:330-331, 1989.

21. "40 CFR Parts 707 and 766, Polyhalogenated Dibenzo-p-Dioxins and Dibenzofurans: Testing and Reporting Requirements: Final Rule," *Federal Register*, Vol. 52 (108):21412-21452, June 5, 1987.

22. Buser, H., "Polybrominated Dibenzo-p-Dioxins and Dibenzofurans: Thermal reaction products of polybrominated diphenyl ether flame retardants," *Environ. Sci. Technol.*, Vol. 20:404-408, 1988.

23. Sovocol, G. W., et al., "Analysis of Municipal Incinerator Fly Ash for Bromo and Bromo/Chloro Dioxins, Dibenzofurans, and Related Compounds," *Chemosphere*, Vol. 18:193-200, 1989.

24. Lewis, R. G., et al., Modification and Evaluation of a High-Volume Air Sampler for Pesticides and Semivolatile Industrial Organic Chemicals," *Anal. Chem.*, Vol. 54:592-594, 1982.

25. Lewis, R. G., et al., "Evaluation of Polyurethane Foam for Sampling Pesticides, Polychlorinated Biphenyls and Polychlorinated Naphthalenes in Ambient Air," *Anal. Chem.*, Vol. 49:1668-1672, 1977.

26. Winberry, W. T., Jr., et al., *Compendium of Methods for the Determination of Toxic Organic Compounds in Ambient Air, Second Supplement, Method TO-9*, U. S. Environmental Protection Agency, Research Triangle Park, NC 27711, EPA 600/4-89-018, March 1989.

27. "Analysis of Air Samples for PCDDs, PCDFs, PCBs, and PAHs in Support of the Great Lakes Deposition Project," Draft Report, Midwest Research Institute, 425 Volker Boulevard, Kansas City, MO, MRI Project No. 3103-A, April 1990.

28. Boggess, K.E., "Analysis of Air Samples for PCDDs, PCDFs, PCBs and PAHs in Support of the Great Lakes Deposition Project," Final Report, Midwest Research Institute, 425 Volker Boulevard, Kansas City, MO, MRI Project No. 3103-A, April 1993.

29. "Working with Carcinogens," NIOSH, Publication 77-206, August 1977.

30. "Safety in the Academic Chemistry Laboratories," ACS Committee on Chemical Safety, 1979.

TABLE 1. NUMBER OF POLYCHLORINATED DIBENZO-P-DIOXIN AND DIBENZOFURAN (PCDD/PCDF) CONGENERS

No. of Chlorine Atoms	No. of PCDD Isomers	No. of PCDF Isomers
1	2	4
2	10	16
3	14	28
4	22	38
5	14	28
6	10	16
7	2	4
8	1	1
Total	75	135

[Note: This also applies for the polybrominated dibenzo-p-dioxins and dibenzofurans (PBDDs/PBDFs).]

TABLE 2. LIST OF 2,3,7,8-CHLORINE SUBSTITUTED PCDD/PCDF CONGENERS

PCDDs	PCDFs
2,3,7,8-TCDD	2,3,7,8-TCDF
1,2,3,7,8-PeCDD	1,2,3,7,8-PeCDF
	2,3,4,7,8-PeCDF
1,2,3,4,7,8-HxCDD	1,2,3,4,7,8-HxCDF
1,2,3,6,7,8-HxCDD	1,2,3,6,7,8-HxCDF
1,2,3,7,8,9-HxCDD	1,2,3,7,8,9-HxCDF
	2,3,4,6,7,8-HxCDF
1,2,3,4,6,7,8-HpCDD	1,2,3,4,6,7,8-HpCDF
	1,2,3,4,7,8,9-HpCDF
1,2,3,4,6,7,8,9-OCDD	1,2,3,4,6,7,8,9-OCDF

TABLE 3. COMPOSITIONS OF THE INITIAL CALIBRATION SOLUTIONS OF LABELED AND UNLABELED PCDDS AND PCDFS

Compound Solution No.	Concentrations (pg/μL)				
	1	2	3	4	5
Unlabeled Analytes					
2,3,7,8-TCDD	0.5	1	5	50	100
2,3,7,8-TCDF	0.5	1	5	50	100
1,2,3,7,8-PeCDD	2.5	5	25	250	500
1,2,3,7,8-PeCDF	2.5	5	25	250	500
2,3,4,7,8-PeCDF	2.5	5	25	250	500
1,2,3,4,7,8-HxCDD	2.5	5	25	250	500
1,2,3,6,7,8-HxCDD	2.5	5	25	250	500
1,2,3,7,8,9-HxCDD	2.5	5	25	250	500
1,2,3,4,7,8-HxCDF	2.5	5	25	250	500
1,2,3,6,7,8-HxCDF	2.5	5	25	250	500
1,2,3,7,8,9-HxCDF	2.5	5	25	250	500
2,3,4,6,7,8-HxCDD	2.5	5	25	250	500
1,2,3,4,6,7,8-HpCDD	2.5	5	25	250	500
1,2,3,4,6,7,8-HpCDF	2.5	5	25	250	500
1,2,3,4,7,8,9-HpCDF	2.5	5	25	250	500
OCDD	5.0	10	50	500	1000
OCDF	5.0	10	50	500	1000
Internal Standards					
$^{13}C_{12}$-2,3,7,8-TCDD	100	100	100	100	100
$^{13}C_{12}$-1,2,3,7,8-PeCDD	100	100	100	100	100
$^{13}C_{12}$-1,2,3,6,7,8-HxCDD	100	100	100	100	100
$^{13}C_{12}$-1,2,3,4,6,7,8-HpCDD	100	100	100	100	100
$^{13}C_{12}$-OCDD	200	200	200	200	200
$^{13}C_{12}$-2,3,7,8-TCDF	100	100	100	100	100

TABLE 3. (continued)

Compound Solution No.	Concentrations (pg/μL)				
	1	2	3	4	5
$^{13}C_{12}$-1,2,3,7,8-PeCDF	100	100	100	100	100
$^{13}C_{12}$-1,2,3,4,7,8-HxCDF	100	100	100	100	100
$^{13}C_{12}$-1,2,3,4,6,7,8-HpCDF	100	100	100	100	100
Surrogate Standards					
$^{13}C_{12}$-2,3,4,7,8-PeCDF	60	80	100	120	140
$^{13}C_{12}$-1,2,3,4,7,8-HxCD	60	80	100	120	140
$^{13}C_{12}$-1,2,3,6,7,8-HxCDF	60	80	100	120	140
$^{13}C_{12}$-1,2,3,6,7,8,9-HpCD	60	80	100	120	140
Field Standards					
$^{37}Cl_4$-2,3,7,8-TCDD	100	100	100	100	100
$^{13}C_{12}$-1,2,3,7,8,9-HxCDD	100	100	100	100	100
Recovery Standard					
$^{13}C_{12}$-1,2,3,4-TCDD	50	50	50	50	50

[Note: Standards specified in EPA Method 1613 can also be used in this method.]

TABLE 4. COMPOSITION OF THE SAMPLE FORTIFICATION SOLUTIONS

Analyte	Concentration (pg/μL)
Chlorinated Internal Standards	
$^{13}C_{12}$-2,3,7,8-TCDD	100
$^{13}C_{12}$-1,2,3,7,8-PeCDD	100
$^{13}C_{12}$-1,2,3,6,7,8-HxCDD	100
$^{13}C_{12}$-1,2,3,4,6,7,8-HpCDD	100
$^{13}C_{12}$-OCDD	100
$^{13}C_{12}$-2,3,7,8-TCDF	100
$^{13}C_{12}$-1,2,3,7,8-PeCDF	100
$^{13}C_{12}$-1,2,3,4,7,8-HxCDF	100
$^{13}C_{12}$-1,2,3,4,6,7,8-HpCDF	100
Brominated Internal Standards	
$^{13}Cl_{12}$-2,3,7,8-TBDD	0.86
$^{13}C_{12}$-2,3,7,8-TBDF	0.86
$^{13}C_{12}$-1,2,3,7,8-PeBDF	0.86

TABLE 5. COMPOSITION OF RECOVERY STANDARD SOLUTION

Analyte	Concentration (pg/μL)
Recovery Standard	
$^{13}C_{12}$-1,2,3,4-TCDD	10

TABLE 6. COMPOSITION OF AIR SAMPLER FIELD FORTIFICATION STANDARD SOLUTION

Analyte	Concentration (pg/μL)
Field Fortification Standard	
$^{37}Cl_4$-2,3,7,8-TCDD	10

TABLE 7. COMPOSITION OF SURROGATE STANDARD SOLUTION

Analyte	Concentration (pg/μL)
Surrogate Standards	
$^{13}C_{12}$-1,2,3,4,7,8-HxCDD	100
$^{13}C_{12}$-2,3,4,7,8-PeCDF	100
$^{13}C_{12}$-1,2,3,6,7,8-HxCDF	100
$^{13}C_{12}$-1,2,3,4,7,8,9-HpCDF	100

TABLE 8. COMPOSITION OF MATRIX AND METHOD SPIKE AND METHOD SPIKE SOLUTIONS OF PCDDS/PCDFS AND PBDDS/PBDFS[a]

Analyte	Concentration (pg/μL)	Analyte	Concentration (pg/μL)
Native PCDDs and PCDFs		**Native PBDDs and PBDFs**	
2,3,7,8-TCDD	1	2,3,7,8-TBDD	1
2,3,7,8-TCDF	1	2,3,7,8-TBDF	1
1,2,3,7,8-PeCDD	5	1,2,3,7,8-PeBDD	5
1,2,3,7,8-PeCDF	5	1,2,3,7,8-PeBDF	5
2,3,4,7,8-PeCDF	5	1,2,3,4,7,8-HxBDD	5
1,2,3,4,7,8-HxCDD	5	1,2,3,4,7,8-HxBDF	5
1,2,3,6,7,8-HxCDD	5		
1,2,3,7,8,9-HxCDD	5		
1,2,3,4,7,8-HxCDF	5		
1,2,3,6,7,8-HxCDF	5		
1,2,3,7,8,9-HxCDF	5		
2,3,4,6,7,8-HxCDF	5		
1,2,3,4,6,7,8-HpCDD	5		
1,2,3,4,6,7,8-HpCDF	5		
1,2,3,4,7,8,9-HpCDF	5		
OCDD	10		
OCDF	10		

[a]Solutions at different concentrations and those containing different congeners may also be used.

TABLE 9. HRGC-HRMS COLUMN PERFORMANCE EVALUATION SOLUTIONS

Congener	First Eluted	Last Eluted
SE-54 Column GC Retention Time Window Defining Standard[a]		
TCDF	1,3,6,8-	1,2,8,9-
TCDD	1,3,6,8-	1,2,8,9-
PeCDF	1,3,4,6,8-	1,2,3,8,9-
PeCDD	1,2,4,7,9-	1,2,3,8,9-
HxCDF	1,2,3,4,6,8-	1,2,3,4,8,9-
HxCDD	1,2,4,6,7,9-	1,2,3,4,6,7-
HpCDF	1,2,3,4,6,7,8-	1,2,3,4,7,8,9-
HpCDD	1,2,3,4,6,7,9-	1,2,3,4,6,7,8-
OCDF	OCDF	
OCDD	OCDD	
SE-54 TCDD Isomer Specificity Test Standard[b]		
	1,2,3,4-TCDD	
	1,4,7,8-TCDD	2,3,7,8-TCDD
SP-2331 Column TCDF Isomer Specificity Test Standard[c]		
	2,3,4,7-TCDF	
	2,3,7,8-TCDF	
	1,2,3,9-TCDF	

[a]A solution containing these congeners and the seventeen 2,3,7,8-substituted congeners may also be used for these purposes.
[b]A solution containing the 1,2,3,4,-TCDD and 2,3,7,8-TCDD may also be used for this purpose.
[c]Solution containing all tetra- through octa-congeners may also be used for these purposes.

TABLE 10. DESCRIPTORS, MASSES, M/Z TYPES, AND ELEMENTAL COMPOSITIONS OF THE PCDDS AND PCDFS

Descriptor Number	Accurate Mass	m/z Type	Elemental Composition	Compound[2]	Primary m/z
1	292.9825	Lock	$C_7 F_{11}$	PFK	
	303.9016	M	$C_{12} H_4 {}^{35}Cl_4 O$	TCDF	Yes
	305.8987	M+2	$C_{12} H_4 {}^{35}Cl_3 {}^{37}Cl O$	TCDF	
	315.9419	M	${}^{13}C_{12} H_4 {}^{35}Cl_4 O$	TCDF[3]	Yes
	317.9389	M+2	${}^{13}C_{12} H_4 {}^{35}Cl_3 {}^{37}Cl O$	TCDF[3]	
	319.8965	M	$C_{12} H_4 {}^{35}Cl_4 O_2$	TCDD	Yes
	321.8936	M+2	$C_{12} H_4 {}^{35}Cl_3 {}^{37}Cl O_2$	TCDD	
	327.8847	M	$C_{12} H_4 {}^{37}Cl_4 O_2$	TCDD[4]	
	330.9792	QC	$C_7 F_{13}$	PFK	
	331.9368	M	${}^{13}C_{12} H_4 {}^{35}Cl_4 O_2$	TCDD[3]	Yes
	333.9339	M+2	${}^{13}C_{12} H_4 {}^{35}Cl_3 {}^{37}Cl O_2$	TCDD[3]	
	375.8364	M+2	$C_{12} H_4 {}^{35}Cl_5 {}^{37}Cl O$	HxCDPE	
2	339.8597	M+2	$C_{12} H_3 {}^{35}Cl_4 {}^{37}Cl O$	PeCDF	Yes
	341.8567	M+4	$C_{12} H_3 {}^{35}Cl_3 {}^{37}Cl_2 O$	PeCDF	
	351.9000	M+2	${}^{13}C_{12} H_3 {}^{35}Cl_4 {}^{37}Cl O$	PeCDF[3]	Yes
	353.8970	M+4	${}^{13}C_{12} H_3 {}^{35}Cl_3 {}^{37}Cl_2 O$	PeCDF[3]	
	354.9792	Lock	$C_9 F_{13}$	PFK	
	355.8546	M+2	$C_{12} H_3 {}^{35}Cl_4 {}^{37}Cl O_2$	PeCDD	Yes
	357.8516	M+4	$C_{12} H_3 {}^{35}Cl_3 {}^{37}Cl_2 O_2$	PeCDD	
	367.8949	M+2	${}^{13}C_{12} H_3 {}^{35}Cl_4 {}^{37}Cl O_2$	PeCDD[4]	Yes
	369.8919	M+4	${}^{13}C_{12} H_3 {}^{35}Cl_3 {}^{37}Cl_2 O_2$	PeCDD[4]	
	409.7974	M+2	$C_{12} H_3 {}^{35}Cl_6 {}^{37}Cl O$	HpCDPE	

TABLE 10. (continued)

Descriptor Number	Accurate Mass	m/z Type	Elemental Composition	Compound[2]	Primary m/z
3	373.8208	M+2	$C_{12}\ H_2\ ^{35}Cl_5\ ^{37}Cl\ O$	HxCDF	Yes
	375.8178	M+4	$C_{12}\ H_2\ ^{35}Cl_4\ ^{37}Cl_2\ O$	HxCDF	
	383.8639	M	$^{13}C_{12}\ H_2\ ^{35}Cl_6\ O$	HxCDF[3]	Yes
	385.8610	M+2	$^{13}C_{12}\ H_2\ ^{35}Cl_5\ ^{37}Cl\ O$	HxCDF[3]	
	389.8157	M+2	$C_{12}\ H_2\ ^{35}Cl_5\ ^{37}Cl\ O_2$	HxCDD	Yes
	391.8127	M+4	$C_{12}\ H_2\ ^{35}Cl_4\ ^{37}Cl_2\ O_2$	HxCDD	
	392.9760	Lock	$C_9\ F_{15}$	PFK	
	401.8559	M+2	$^{13}C_{12}\ H_2\ ^{35}Cl_5\ ^{37}Cl\ O_2$	HxCDD[3]	Yes
	403.8529	M+4	$^{13}C_{12}\ H_2\ ^{35}Cl_4\ ^{37}Cl_2\ O_2$	HxCDD[3]	
	430.9729	QC	$C_9\ F_{13}$	PFK	
	445.7555	M+4	$C_{12}\ H_2\ ^{35}Cl_6\ ^{37}Cl_2\ O$	OCDPE	
4	407.7818	M+2	$C_{12}H^{35}Cl_6\ ^{37}Cl\ O$	H_pCDF	Yes
	409.7789	M+4	$C_{12}\ H\ ^{35}Cl_5\ ^{37}Cl_2\ O$	HpCDF	
	417.8253	M	$^{13}C_{12}\ H\ ^{35}Cl_7\ O$	HpCDF[3]	Yes
	419.8220	M+2	$^{13}C_{12}\ H\ ^{35}Cl_6\ ^{37}Cl\ O$	HpCDF[3]	
	423.7766	M+2	$C_{12}\ H\ ^{35}Cl_6\ ^{37}Cl\ O_2$	HpCDD	Yes
	425.7737	M+4	$C_{12}\ H\ ^{35}Cl_5\ ^{37}Cl_2\ O_2$	HpCDD	
	430.9729	Lock	$C_9\ F_{17}$	PFK	
	435.8169	M+2	$^{13}C_{12}\ H\ ^{35}Cl_6\ ^{37}Cl\ O_2$	HpCDD[3]	Yes
	437.8140	M+4	$^{13}C_{12}\ H\ ^{35}Cl_5\ ^{37}Cl_2\ O_2$	HpCDD[3]	
	479.7165	M+4	$C_{12}\ H\ ^{35}Cl_7\ ^{37}Cl_2\ O$	NCDPE	

TABLE 10. (continued)

Descriptor Number	Accurate Mass	m/z Type	Elemental Composition	Compound[2]	Primary m/z
5	441.7428	M+2	$C_{12}\ ^{35}Cl_7\ ^{37}Cl\ O$	OCDF	Yes
	442.9728	Lock	$C_{10}\ F_{17}$	PFK	
	443.7399	M+4	$C_{12}\ ^{35}Cl_6\ ^{37}Cl_2\ O$	OCDF	
	457.7377	M+2	$C_{12}\ ^{35}Cl_7\ ^{37}Cl\ O_2$	OCDD	Yes
	459.7348	M+4	$C_{12}\ ^{35}Cl_6\ ^{37}Cl_2\ O_2$	OCDD	
	469.7779	M+2	$^{13}C_{12}\ ^{35}Cl_7\ ^{37}Cl\ O_2$	OCDD[3]	Yes
	471.7750	M+4	$^{13}C_{12}\ ^{35}Cl_6\ ^{37}Cl_2\ O_2$	OCDD[3]	
	513.6775	M+4	$C_{12}\ ^{35}Cl_8\ ^{37}Cl_2\ O$	DCDPE	

[1]Nuclidic masses used:
H = 1.007825 C = 12.00000 ^{13}C = 13.003355 F = 18.9984
O = 15.994915 ^{35}Cl = 34.968853 ^{37}Cl = 36.965903

[2]Compound abbreviations:

Polychlorinated dibenzo-p-dioxins
TCDD = Tetrachlorodibenzo-p-dioxin
PeCDD = Pentachlorodibenzo-p-dioxin
HxCDD = Hexachlorodibenzo-p-dioxin
HpCDD = Heptachlorodibenzo-p-dioxin
OCDD = Octachlorodibenzo-p-dioxin

Polychlorinated dibenzofurans
TCDF = Tetrachlorodibenzofuran
PeCDF = Pentachlorodibenzofuran
HxCDF = Hexachlorodibenzofuran
HpCDF = Heptachlorodibenzofuran

Polychlorinated diphenyl ethers
HxCDPE = Hexachlorodiphenyl ether
HpCDPE = Heptachlorodiphenyl ether
OCDPE = Octachlorodiphenyl ether
NCDPE = Nonachlorodiphenyl ether
DCDPE = Decachlorodiphenyl ether

Lock mass and QC compound
PFK = Perfluorokerosene

[3]Labeled compound

[4]There is only one m/z for $^{37}Cl_4$-2,3,7,8-TCDD (recovery standard).

TABLE 11. DESCRIPTORS, M/Z TYPES, EXACT MASSES AND ELEMENTAL COMPOSITIONS OF THE PBDDS AND PBDFS

Descriptor Number	Accurate Mass[1]	Ion Type	Elemental Composition	Compound[2]
1	327.8847	M	$C_{12}H_4{}^{37}Cl_4O_2$	TCDD[4]
	330.9792	QC	C_7F_{13}	PFK
	331.9368	M	$C_{12}H_4{}^{35}Cl_4O_2$	TCDD[3]
	333.9339	M+2	$C_{12}H_4{}^{35}Cl_3{}^{37}ClO_2$	TCDD[3]
2	417.825	M	$^{13}C_{12}H{}^{35}Cl_7O$	HpCDF[3]
	419.822	M+2	$^{13}C_{12}H{}^{35}Cl_6{}^{37}ClO$	HpCDF[3]
	466.973	QC		PFK
	481.698	M+2	$C_{12}H_4{}^{79}Br_3{}^{81}BrO$	TBDF
	483.696	M+4	$C_{12}H_4{}^{79}Br_2{}^{81}Br_2O$	TBDF
	485.694	M+6	$C_{12}H_4{}^{79}Br{}^{81}Br_3O$	TBDF
	492.970	LOCK MASS		PFK
	493.738	M+2	$^{13}C_{12}H_4{}^{79}Br_3{}^{81}BrO$	TBDF[3]
	495.736	M+4	$^{13}C_{12}H_4{}^{79}Br_2{}^{81}Br_2O$	TBDD[3]
	497.692	M+2	$C_{12}H_4{}^{79}Br_3{}^{81}BrO_2$	TBDD
	499.690	M+4	$C_{12}H_4{}^{79}Br_2{}^{81}Br_2O_2$	TBDD
	501.689	M+6	$C_{12}H_4{}^{79}Br{}^{81}Br_3O$	TBDD
	509.733	M+2	$^{13}C_{12}H_4{}^{79}Br_3{}^{81}BrO_2$	TBDD[3]
	511.731	M+4	$^{13}C_{12}H_4{}^{79}Br_2{}^{81}Br_2O_2$	TBDD[3]
	565.620	M+6	$C_{12}H_5{}^{79}Br_2{}^{81}Br_3O$	PeBDPO
	643.530	M+6	$C_{12}H_4{}^{79}Br_3{}^{81}Br_3O$	HxBDPO

TABLE 11. (continued)

Descriptor Number	Accurate Mass[1]	Ion Type	Elemental Composition	Compound[2]
3	469.778	M+2	$^{13}C_{12}\ ^{35}Cl_7\ ^{37}Cl\ O_2$	OCDD[3]
	471.775	M+4	$^{13}C_{12}\ ^{35}Cl_6\ ^{37}Cl\ O_2$	OCDD[3]
	559.608	M+2	$C_{12}\ H_3\ ^{79}Br_4\ ^{81}Br\ O$	PeBDF
	561.606	M+4	$C_{12}\ H_3\ ^{79}Br_3\ ^{81}Br_2\ O$	PeBDF
	563.604	M+6	$C_{12}\ H_3\ ^{79}Br_2\ ^{81}Br_3\ O$	PeBDF
	566.966	LOCK MASS		PFK
	573.646	M+4	$^{13}C_{12}\ H_3\ ^{79}Br_3\ ^{81}Br_2\ O$	PeBDF[3]
	575.644	M+6	$^{13}C_{12}\ H_3\ ^{79}Br_2\ ^{81}Br_3\ O$	PeBDF[3]
	575.603	M+2	$C_{12}\ H_3\ ^{79}Br_4\ ^{81}Br\ O_2$	PeBDD
	577.601	M+4	$C_{12}\ H_3\ ^{79}Br_3\ ^{37}Br_2\ O_2$	PeBDD
	579.599	M+6	$C_{12}\ H_3\ ^{79}Br_2\ ^{81}Br_3\ O_2$	PeBDD
	589.641	M+4	$^{13}C_{12}\ H_3\ ^{79}Br_3\ ^{37}Br_2\ O_2$	PeBDD[3]
	591.639	M+6	$^{13}C_{12}\ H_3\ ^{79}Br_3\ ^{81}Br_2\ O_2$	PeBDD[3]
	616.963	QC		PFK

TABLE 11. (continued)

Descriptor Number	Accurate Mass[1]	Ion Type	Elemental Composition	Compound[2]
4	643.530	M+6	$C_{12}H_4{}^{79}Br_3{}^{81}Br_3O$	HxBDPO
	721.441	M+6	$C_{12}H_3{}^{79}Br_4{}^{81}Br_3O$	HpBDPO
	616.963	QC		PFK
	639.517	M+4	$C_{12}H_2{}^{79}Br_4{}^{81}Br_2O$	HxBDF
	641.514	M+6	$C_{12}H_2{}^{79}Br_3{}^{81}Br_3O$	HxBDF
	643.512	M+8	$C_{12}H_2{}^{79}Br_2{}^{81}Br_4O$	HxBDF
	655.511	M+4	$C_{12}H_2{}^{79}Br_4{}^{81}Br_2O_2$	HxBDD
	657.509	M+6	$C_{12}H_2{}^{79}Br_3{}^{81}Br_3O_2$	HxBDD
	659.507	M+8	$C_{12}H_2{}^{79}Br_2{}^{81}Br_4O_2$	HxBDD
	666.960	LOCK MASS		PFK
	721.441	M+6	$C_{12}H_3{}^{79}Br_4{}^{81}Br_3O$	HpBDPO
	801.349	M+8	$C_{12}H_2{}^{79}Br_4{}^{81}Br_4O$	OBDPO

TABLE 11. (continued)

Descriptor Number	Accurate Mass[1]	Ion Type	Elemental Composition	Compound[2]
5	717.427	M+4	$C_{12}H\,^{79}Br_5\,^{81}Br_2O$	HpBDF
	719.425	M+6	$C_{12}H\,^{79}Br_4\,^{81}Br_3O$	HpBDF
	721.423	M+8	$C_{12}H\,^{79}Br_3\,^{81}Br_4O$	HpBDF
	733.422	M+4	$C_{12}H\,^{79}Br_5\,^{81}Br_2O_2$	HpBDD
	735.420	M+6	$C_{12}H\,^{79}Br_4\,^{81}Br_3O_2$	HpBDD
	737.418	M+4	$C_{12}H\,^{79}Br_3\,^{81}Br_4O_2$	HpBDD
	754.954	QC		PFK
	770.960	LOCK MASS ALTERNATE		HpTriazine
	801.349	M+8	$C_{12}H_2\,^{79}Br_4\,^{81}Br_4O$	OBDPO
	816.951	LOCK MASS		PFK
	879.260	M+8	$C_{12}H\,^{79}Br_5\,^{81}Br_4O$	NBDPO
	865.958	QC ALTERNATE		HpTriazine

[1]Nuclidic masses used: H = 1.007825 C = 12.000000 ^{13}C = 13.003355
O = 15.994915 ^{79}Br = 78.91834 ^{81}Br = 80.91629
^{19}F = 18.9984

[2]Compound abbreviations:

Polybromoinated dibenzo-p-dioxins
TBDD = Tetrabromodibenzo-p-dioxin
PeBDD = Pentabromodibenzo-p-dioxin
HxBDD = Hexabromodibenzo-p-dioxin
HpBDD = Heptabromodibenzo-p-dioxin
OBDD = Octabromodibenzo-p-dioxin

Polybromoinated dibenzofurans
TBDF = Tetrabromodibenzofuran
PeBDF = Pentabromodibenzofuran
HxBDF = Hexabromodibenzofuran
HpBDF = Heptabromodibenzofuran
OBDF = Octabromodibenzofuran

Polybromoinated diphenyl ethers
HxBDPE = Hexabromodiphenyl ether
HpBDPE = Heptabromodiphenyl ether
OBDPE = Octabromodiphenyl ether
NBDPE = Nonabromodiphenyl ether
DBDPE = Decabromodiphenyl ether
PFK = Perfluorokerosene
HpTriazine = Tris-(perfluoroheptyl)-s-Triazine

[3]Labeled Compound

[4]There is only one m/z for $^{37}Cl_4$-2378-TCDD (recovery standard).

TABLE 12. DESCRIPTORS, MASSES, M/Z TYPES, AND ELEMENTAL COMPOSITIONS OF THE BCDDS AND BCDFS

Descriptor Number	Accurate mass[1]	m/z Type	Elemental Composition	Compound[2]	Primary m/z
1	315.942	M	$^{13}C_{12}\ H_4\ ^{35}Cl_4\ O$	TCDF[4]	
	317.939	M+2	$C_{12}\ H_4\ ^{35}Cl_3\ ^{37}Cl\ O$	TCDF[4]	Yes
	327.885	M	$C_{12}\ H_4\ ^{35}Cl_4\ O_2$	TCDD[3]	Yes
	330.979	Lock	$C_7\ F_{13}$	PFK	
	331.937	M	$^{13}C_{12}\ H_4\ ^{35}Cl_4\ O_2$	TCDD[4]	
	333.934	M+2	$^{13}C_{12}\ H_4\ ^{35}Cl_3\ ^{37}Cl\ O_2$	TCDD[4]	Yes
	347.851	M	$C_{12}\ H_4\ ^{35}Cl_3\ ^{79}Br\ 0$	$Br\ Cl_3$ DF	
	349.849	M+2	$C_{12}\ H_4\ ^{35}Cl_2\ ^{37}Cl\ ^{79}Br\ O$	$Br\ Cl_3$ DF	Yes
	363.846	M	$C_{12}\ H_4\ ^{35}Cl_3\ ^{79}Br\ O_2$	$Br\ Cl_3$ DD	
	365.844	M+2	$C_{12}\ H_4\ ^{35}Cl_2\ ^{37}Cl\ ^{79}Br\ O_2$	$Br\ Cl_3$ DD	Yes

TABLE 12. (continued)

Descriptor Number	Accurate mass[1]	m/z Type	Elemental Composition	Compound[2]	Primary m/z
2	351.900	M+2	$^{13}C_{12}\ H_3\ ^{35}Cl_5\ O$	$PeCDF_4$	
	353.897	M+4	$^{13}C_{12}\ H_3\ ^{35}Cl_4\ ^{37}Cl\ 0$	PeCDF[4]	
	354.979	Lock	$C_9\ F_3$	PFK	
	367.895	M+2	$^{13}C_{12}\ H_3\ ^{35}Cl_5\ O_2$	PeCDD[4]	Yes
	369.892	M+4	$^{13}C_{12}\ H_3\ ^{35}Cl_4\ ^{37}Cl\ O_2$	PeCDD[4]	
	381.812	M	$C_{12}\ H_3\ ^{35}Cl_4\ ^{79}Br\ O$	$Br\ Cl_4\ DF$	
	383.809	M+2	$C_{12}\ H_3\ ^{35}Cl_3\ ^{37}Cl\ ^{79}Br\ O$	$Br\ Cl_4\ DF$	Yes
	397.807	M	$C_{12}\ H_3\ ^{35}Cl_4\ ^{79}Br\ O_2$	$Br\ Cl_4\ DD$	
	399.804	M+2	$C_{12}\ H_3\ ^{35}Cl_3\ ^{37}Cl\ ^{79}Br\ O_2$	$Br\ Cl_4\ DD$	Yes

[1]Nuclidic masses used:

H = 1.007825	C = 12.00000	^{13}C = 13.003355
O = 15.994915	^{35}Cl = 34.968853	^{37}Cl = 36.965903
F = 18.9984	^{79}Br = 78.91834	^{81}Br = 80.91629

[2]Compound abbreviations:

Polychlorinated dibenzo-p-dioxins
TCDD = Tetrachlorodibenzo-p-dioxin
PeCDD = Pentachlorodibenzo-p-dioxin
HxCDD = Hexachlorodibenzo-p-dioxin
HpCDD = Heptachlorodibenzo-p-dioxin
OCDD = Octachlorodibenzo-p-dioxin

Polychlorinated dibenzofurans
TCDF = Tetrachlorodibenzofuran
PeCDF = Pentachlorodibenzofuran
HxCDF = Hexachlorodibenzofuran
HpCDF = Heptachlorodibenzofuran

Brominated/Chlorinated dibenzo-p-dioxins and dibenzofurans
$BrCl_3DD$ = Bromotrichloro dibenzo-p-dioxin
$BrCl_4DD$ = Bromotetrachloro dibenzo-p-dioxin
$BrCl_3DF$ = Bromotrichloro dibenzofuran
$BrCl_4DF$ = Bromotetrachloro dibenzofuran

Lock mass and QC compound
PFK = Perfluorokerosene

[3]There is only one m/z for $^{37}Cl_4$-2,3,7,8-TCDD (recovery standard).
[4]Labeled compound

TABLE 13. HRGC OPERATING CONDITIONS

Column Type	DB-5	SE-54	SP-2331
Length (m)	60	30	60
i.d. (mm)	0.25	0.25	0.25
Film Thickness (μm)	0.25	0.25	0.20
Carrier Gas	Helium	Helium	Helium
Carrier Gas Flow (mL/min)	1-2	1-2	1-2
Injector temperature (°C)	290	308	308
Injection Mode	Splitless	<--- Moving needle --->	
Initial Temperature (°C)	200	170.0	150.0
Initial Time (min)	2	7.0	7.0
Rate 1 (°C/min)	5	8.0	10.0
Temperature (°C)	220		
Hold Time (min)	16		
Rate 2 (deg. C/min)	5		
Temperature (°C)	235		
Hold Time (min)	7		
Rate 2 (deg. C/min)	5		
Final Temperature (°C)	330	300.0	250.0
Hold Time (min)	5		

TABLE 14. HRMS OPERATING CONDITIONS

Electron impact ionization	25-70 eV
Mass resolution	>10,000 (10% Valley Definition)
Analysis	Selected ion monitoring (SIM)
Exact masses monitored	Masses shown in Tables 10, 11, 12

TABLE 15. UNLABELED AND LABELED
ANALYTE QUANTIFICATION RELATIONSHIPS

Analyte	Internal Standard Used During Quantification
2,3,7,8-TCDD	$^{13}C_{12}$-2,3,7,8-TCDD
Other TCDDs	$^{13}C_{12}$-2,3,7,8-TCDD
$^{37}Cl_4$-2,3,7,8-TCDD	$^{13}C_{12}$-2,3,7,8-TCDD
1,2,3,7,8-PeCDD	$^{13}C_{12}$-1,2,3,7,8-PeCDD
Other PeCDDs	$^{13}C_{12}$-1,2,3,7,8-PeCDD
1,2,3,4,7,8-HxCDD	$^{13}C_{12}$-1,2,3,6,7,8-HxCDD
1,2,3,6,7,8-HxCDD	$^{13}C_{12}$-1,2,3,6,7,8-HxCDD
1,2,3,7,8,9-HxCDD	$^{13}C_{12}$-1,2,3,6,7,8-HxCDD
Other HxCDDs	$^{13}C_{12}$-1,2,3,6,7,8-HxCDD
1,2,3,4,6,7,8-HpCDD	$^{13}C_{12}$-1,2,3,4,6,7,8-HpCDD
Other HpCDDs	$^{13}C_{12}$-1,2,3,4,6,7,8-HpCDD
OCDD	$^{13}C_{12}$-OCDD
2,3,7,8-TCDF	$^{13}C_{12}$-2,3,7,8-TCDF
Other TCDFs	$^{13}C_{12}$-2,3,7,8-TCDF
1,2,3,7,8-PeCDF	$^{13}C_{12}$-1,2,3,7,8-PeCDF
2,3,4,7,8-PeCDF	$^{13}C_{12}$-1,2,3,7,8-PeCDF
Other PeCDFs	$^{13}C_{12}$-1,2,3,7,8-PeCDF
1,2,3,4,7,8-HxCDF	$^{13}C_{12}$-1,2,3,4,7,8-HxCDF
1,2,3,6,7,8-HxCDF	$^{13}C_{12}$-1,2,3,4,7,8-HxCDF
1,2,3,7,8,9-HxCDF	$^{13}C_{12}$-1,2,3,4,7,8-HxCDF
2,3,4,6,7,8-HxCDF	$^{13}C_{12}$-1,2,3,4,7,8-HxCDF
Other HxCDFs	$^{13}C_{12}$-1,2,3,4,7,8-HxCDF
1,2,3,4,6,7,8-HpCDF	$^{13}C_{12}$-1,2,3,4,6,7,8-HpCDF
1,2,3,4,7,8,9-HpCDF	$^{13}C_{12}$-1,2,3,4,6,7,8-HpCDF
Other HpCDFs	$^{13}C_{12}$-1,2,3,4,6,7,8-HpCDF
OCDF	$^{13}C_{12}$-OCDD

TABLE 16. INTERNAL STANDARDS QUANTIFICATION RELATIONSHIPS

Internal Standard	Standard Used During Percent Recovery Determination[a]
$^{13}C_{12}$-2,3,7,8-TCDD	$^{13}C_{12}$-1,2,3,4-TCDD
$^{13}C_{12}$-1,2,3,7,8-PeCDD	$^{13}C_{12}$-1,2,3,4-TCDD
$^{13}C_{12}$-1,2,3,6,7,8-HxCDD	$^{13}C_{12}$-1,2,3,7,8,9-HxCDD
$^{13}C_{12}$-1,2,3,4,6,7,8-HpCDD	$^{13}C_{12}$-1,2,3,7,8,9-HxCDD
$^{13}C_{12}$-OCDD	$^{13}C_{12}$-1,2,3,7,8,9-HxCDD
$^{13}C_{12}$-2,3,7,8-TCDF	$^{13}C_{12}$-1,2,3,4-TCDD
$^{13}C_{12}$-1,2,3,7,8-PeCDF	$^{13}C_{12}$-1,2,3,4-TCDD
$^{13}C_{12}$-1,2,3,4,7,8-HxCDF	$^{13}C_{12}$-1,2,3,7,8,9-HxCDD
$^{13}C_{12}$-1,2,3,4,6,7,8-HpCDF	$^{13}C_{12}$-1,2,3,7,8,9-HxCDD

[a]Surrogate standards shown in Table 7 may also be used.

TABLE 17. SURROGATE/ALTERNATE STANDARDS QUANTIFICATION RELATIONSHIPS

Surrogate Standard	Standard Used During Percent Recovery Determination
$^{13}C_{12}$-2,3,4,7,8-PeCDF	$^{13}C_{12}$-1,2,3,7,8-PeCDF
$^{13}C_{12}$-1,2,3,4,7,8-HxCDD	$^{13}C_{12}$-1,2,3,6,7,8-HxCDD
$^{13}C_{12}$-1,2,3,6,7,8-HxCDF	$^{13}C_{12}$-1,2,3,4,7,8-HxCDF
$^{13}C_{12}$-1,2,3,4,7,8,9-HpCDF	$^{13}C_{12}$-1,2,3,4,6,7,8-HpCDF

[Note: Other surrogate standards may be used instead]

TABLE 18. QUANTIFICATION RELATIONSHIPS OF THE CARBON-LABELED STANDARDS AND THE ANALYTES

Analytes	Quantification Standard
2,3,7,8-TBDD	$^{13}C_{12}$-2,3,7,8-TBDD
2,3,7,8-TBDF	$^{13}C_{12}$-2,3,7,8-TBDF
1,2,3,7,8-PeBDD	$^{13}C_{12}$-1,2,3,7,8-PeBDD
1,2,3,7,8-PeBDF	$^{13}C_{12}$-1,2,3,7,8-PeBDF
2,3,4,7,8-PeBDF	$^{13}C_{12}$-1,2,3,7,8-PeBDF
1,2,3,4,7,8-HxBDD	$^{13}C_{12}$-1,2,3,7,8-PeBDD

[Note: O.5 ng $^{37}Cl_4$-2,3,7,8-TCDD spiked to the extract prior to final concentration to 60 μL was used to determine the method efficiency (% recovery of the $^{13}C_{12}$-labeled PBDDs/PBDFs).

- *Additional 2,3,7,8-substituted PBDDs/PBDFs are now commercially available.*
- *Retention Index for the PBDDs/PBDFs were published by Sovocool, etal., Chemosphere 16, 221-114, 1987; and Donnelly, et al., Biomedical Environmental Mass Spectrometry, 14, pp. 465-472, 1987.]*

TABLE 19. THEORETICAL ION ABUNDANCE RATIOS AND CONTROL LIMITS FOR PCDDS AND PCDFS

No. of Chlorine Atoms	m/z's Forming Ratio	Theoretical Ratio	Control Limits[1]	
			Lower	Upper
4[2]	M/M+2	0.77	0.65	0.89
5	M+2/M+4	1.55	1.32	1.78
6	M+2/M+4	1.24	1.05	1.43
6[3]	M/M+2	0.51	0.43	0.59
7	M+2/M+4	1.04	0.88	1.20
7[4]	M/M+2	0.44	0.37	0.51
8	M+2/M+4	0.89	0.76	1.02

[1]Represent ± 15% windows around the theoretical ion abundance ratios.
[2]Does not apply to $^{37}Cl_4$-2,3,7,8-TCDD (cleanup standard).
[3]Used for $^{13}C_{12}$-HxCDF only.
[4]Used for $^{13}C_{12}$-HpCDF only.

TABLE 20. THEORETICAL ION ABUNDANCE RATIOS AND CONTROL LIMITS FOR PBDDS AND PBDFS

Number of Bromine Atoms	Ion Type	Theoretical Ratio	Control Limits	
			Lower	Upper
4	M+2/M+4	0.68	0.54	0.82
4	M+4/M+6	1.52	1.22	1.82
5	M+2/M+4	0.51	0.41	0.61
5	M+4/M+6	1.02	0.82	1.22
6	M+4/M+6	0.77	0.62	0.92
6	M+6/M+8	1.36	1.09	1.63
7	M+4/M+6	0.61	0.49	0.73
7	M+6/M+8	1.02	0.82	1.22

TABLE 21. MINIMUM REQUIREMENTS FOR INITIAL AND DAILY CALIBRATION RESPONSE FACTORS

Compound	Relative Response Factors	
	Initial Calibration RSD	Daily Calibration % Difference
Unlabeled Analytes		
2,3,7,8-TCDD	25	25
2,3,7,8-TCDF	25	25
1,2,3,7,8-PeCDD	25	25
1,2,3,7,8-PeCDF	25	25
2,3,4,7,8-PeCDF	25	25
1,2,4,5,7,8-HxCDD	25	25
1,2,3,6,7,8-HxCDD	25	25
1,2,3,7,8,9-HxCDD	25	25
1,2,3,4,7,8-HxCDF	25	25
1,2,3,6,7,8-HxCDF	25	25
1,2,3,7,8,9-HxCDF	25	25
2,3,4,6,7,8-HxCDF	25	25
1,2,3,4,6,7,8-HpCDD	25	25
1,2,3,4,6,7,8-HpCDF	25	25
OCDD	25	25
OCDF	30	30
Internal Standards		
$_{13}C_{12}$-2,3,7,8-TCDD	25	25
$^{13}C_{12}$-1,2,3,7,8-PeCDD	30	30
$^{13}C_{12}$-1,2,3,6,7,8-HxCDD	25	25
$^{13}C_{12}$-1,2,3,4,6,7,8-HpCDD	30	30

TABLE 21. (continued)

Compound	Relative Response Factors	
	Initial Calibration RSD	Daily Calibration % Difference
$^{13}C_{12}$-OCDD	30	30
$^{13}C_{12}$-2,3,7,8-TCDF	30	30
$^{13}C_{12}$-1,2,3,7,8-PeCDF	30	30
$^{13}C_{12}$-1,2,3,4,7,8-HxCDF	30	30
$^{13}C_{12}$-1,2,3,4,6,7,8-HpCDF	30	30
Surrogate Standards		
$^{37}Cl_4$-2,3,7,8-TCDD	25	25
$^{13}C_{12}$-2,3,4,7,8-PeCDF	25	25
$^{13}C_{12}$-1,2,3,4,7,8-HxCDD	25	25
$^{13}C_{12}$-1,2,3,4,7,8-HxCDF	25	25
$^{13}C_{12}$-1,2,3,4,7,8,9-HpCDF	25	25

TABLE 22. 2,3,7,8-TCDD EQUIVALENT FACTORS (TEFS)[1]
FOR THE POLYCHLORINATED DIBENZODIOXINS
AND POLYCHLORINATED DIBENZOFURANS

Number	Compound	TEF
1	2,3,7,8-TCDD	1.00
2	1,2,3,7,8-PeCDD	0.50
3	1,2,3,4,7,8-HxCDD	0.1
4	1,2,3,6,7,8-HxCDD	0.1
5	1,2,3,7,8,9-HxCDD	0.1
6	1,2,3,4,6,7,8-HpCDD	0.01
7	OCDD	0.001
8	2,3,4,7,8-TCDF	0.10
9	1,2,3,7,8-PeCDF	0.05
10	2,3,4,7,8-PeCDF	0.5
11	1,2,3,4,7,8-HxCDF	0.1
12	1,2,3,6,7,8-HxCDF	0.1
13	1,2,3,7,8,9-HxCDF	0.1
14	2,3,4,6,7,8-HxCDF	0.1
15	1,2,3,4,6,7,8-HpCDF	0.01
16	1,2,3,4,7,8,9-HpCDF	0.01
17	OCDF	0.001

[1]Interim procedures for Estimating Risks associated with Exposures to mixtures of Chlorinated Dibenzo-p-Dioxins and Dibenzofurans (CDDs/CDFs), WPA-625/3-89-016, March 1989.

[Note: The same TEFs are assigned to the PBDDs/PBDFs and BCDDs/BCDFs.]

TABLE 23. MINIMUM SAMPLING EQUIPMENT CALIBRATION AND ACCURACY REQUIREMENTS

Equipment	Acceptance limits	Frequency and method of measurement	Action if requirements are not met
Sampler	Indicated flow rate = true flow rate ±10%.	Calibrate with certified transfer standard on receipt, after maintenance on sampler, and any time audits or flow checks deviate more than ±10% from the indicated flow rate or ±10% from the design flow rate.	Recalibrate
Associated equipment			
Sampler on/off timer	±30 min/24 hour	Check at purchase and routinely on sample-recovery days	Adjust or replace
Elapsed-time meter	±30 min/24 hour	Compare with a standard time-piece of known accuracy at receipt and at 6-month intervals	Adjust or replace
Flowrate transfer standard (orifice device)	Check at receipt for visual damage	Recalibrate annually against positive displacement standard volume meter	Adopt new calibration curve

TABLE 24. FORMAT FOR TABLE OF ANALYTICAL RESULTS

IDENTIFICATION					
AIR SAMPLER EFFICIENCY (% RECOVERY)					
$^{13}C_{12}$-1,2,3,4,-TCDD					
METHOD EFFICIENCY (% RECOVERY)					
$^{13}C_{12}$-2,3,7,8-TCDF					
$^{13}C_{12}$-2,3,7,8-TCDD					
$^{13}C_{12}$-1,2,3,7,8-PeCDF					
$^{13}C_{12}$-1,2,3,7,8-PeCDD					
$^{13}C_{12}$-1,2,3,4,7,8-HxCDF					
$^{13}C_{12}$-1,2,3,6,7,8-HxCDD					
$^{13}C_{12}$-1,2,3,4,6,7,8-HpCDD					
$^{13}C_{12}$-OCDD					
CONCENTRATIONS DETECTED or MDL (pg/m^3)					
TCDDs (TOTAL)[1]					
2,3,7,8-TCDD					
PeCDDs (TOTAL)					
1,2,3,7,8-PeCDD					
HxCDDs (TOTAL)					
1,2,3,4,7,8-HxCDD					
1,2,3,6,7,8-HxCDD					
1,2,3,7,8,9-HxCDD					
HpCDDs (TOTAL)					
1,2,3,4,6,7,8-HpCDD					

TABLE 24. (continued)

IDENTIFICATION					
OCDD					
TCDFs (TOTAL)					
2,3,7,8-TCDF					
PeCDFs (TOTAL)					
1,2,3,7,8-PeCDF					
2,3,4,7,8-PeCDF					
HxCDFs (TOTAL)					
1,2,3,4,7,8-HxCDF					
1,2,3,6,7,8-HxCDF					
1,2,3,7,8,9-HxCDF					
2,3,4,6,7,8-HxCDF					
HpCDFs (TOTAL)					
1,2,3,4,6,7,8-HpCDF					
1,2,3,4,7,8,9-HpCDF					
OCDF					

[1](TOTAL) = All congeners, including the 2,3,7,8-substituted congeners.
ND = Not detected at specified minimum detection limit (MDL).

[Note: Please refer to text for discussion and qualification that must accompany the results.]

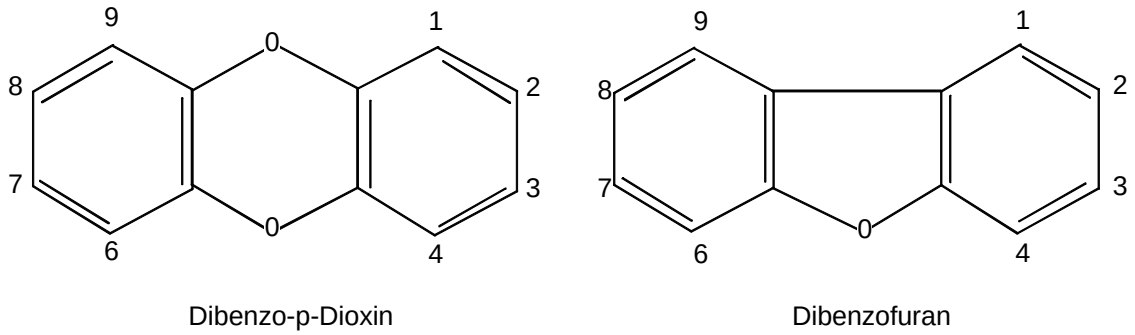

Figure 1. Dibenzo-p-dioxin and dibenzofuran structures.

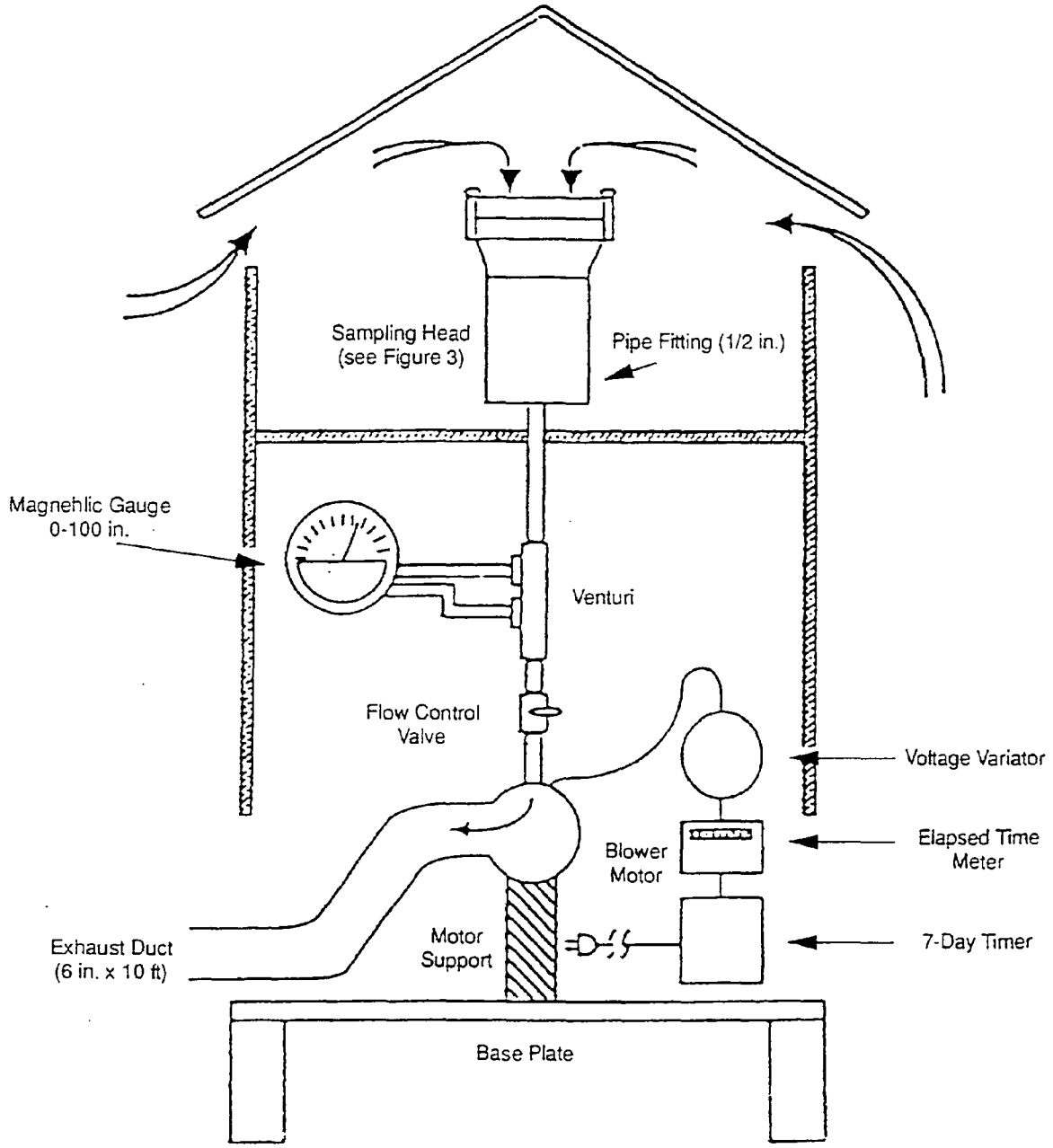

Figure 2. Typical dioxins/furan high volume air sampler.

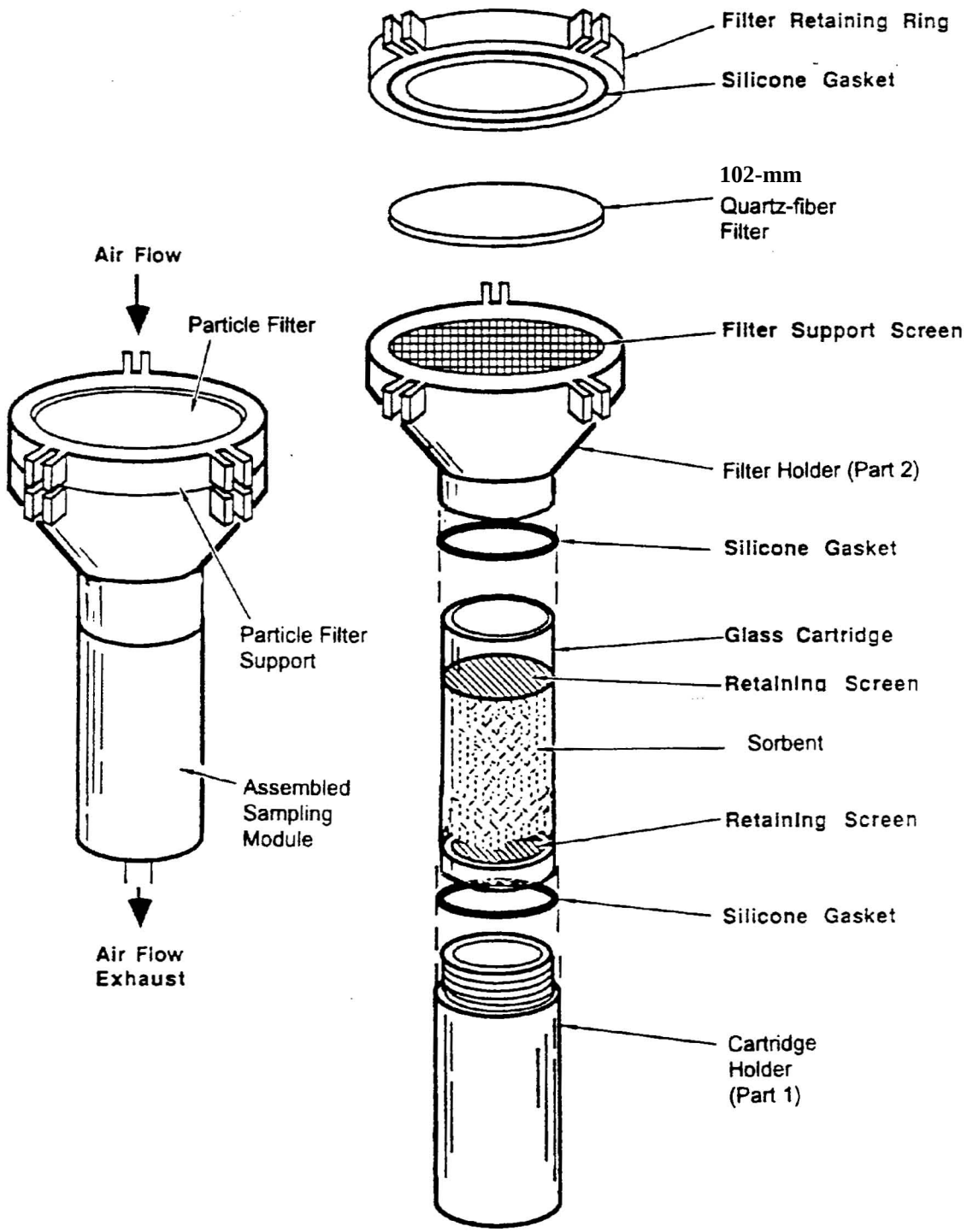

Figure 3a. Typical absorbent cartridge assembly for sampling dioxin/furans.

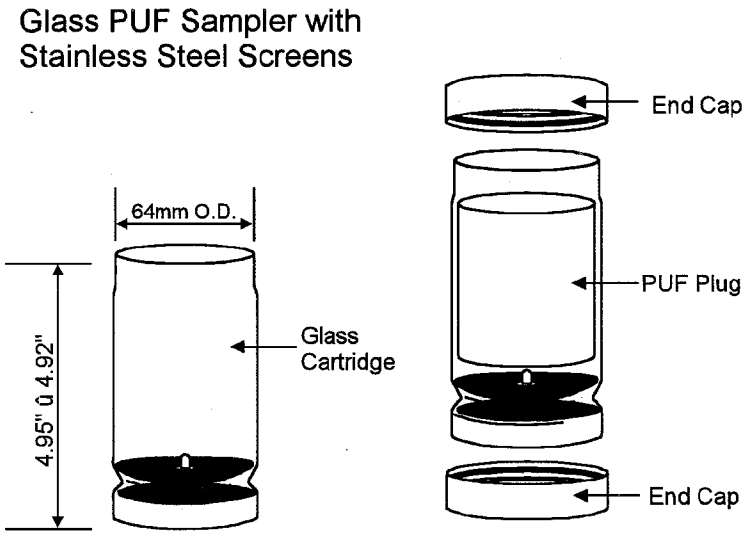

(1) Glass PUF cartridge, plug, and end caps.

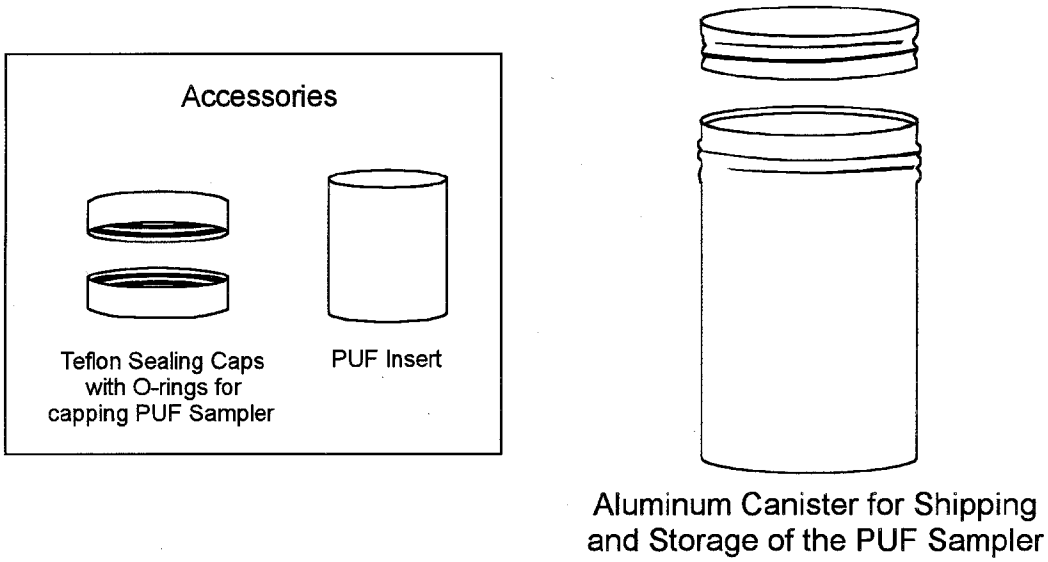

(2) PUF shipping container.

Figure 3b. Typical glass PUF cartridge (1) and shipping container (2) for use with hi-vol sampling systems.

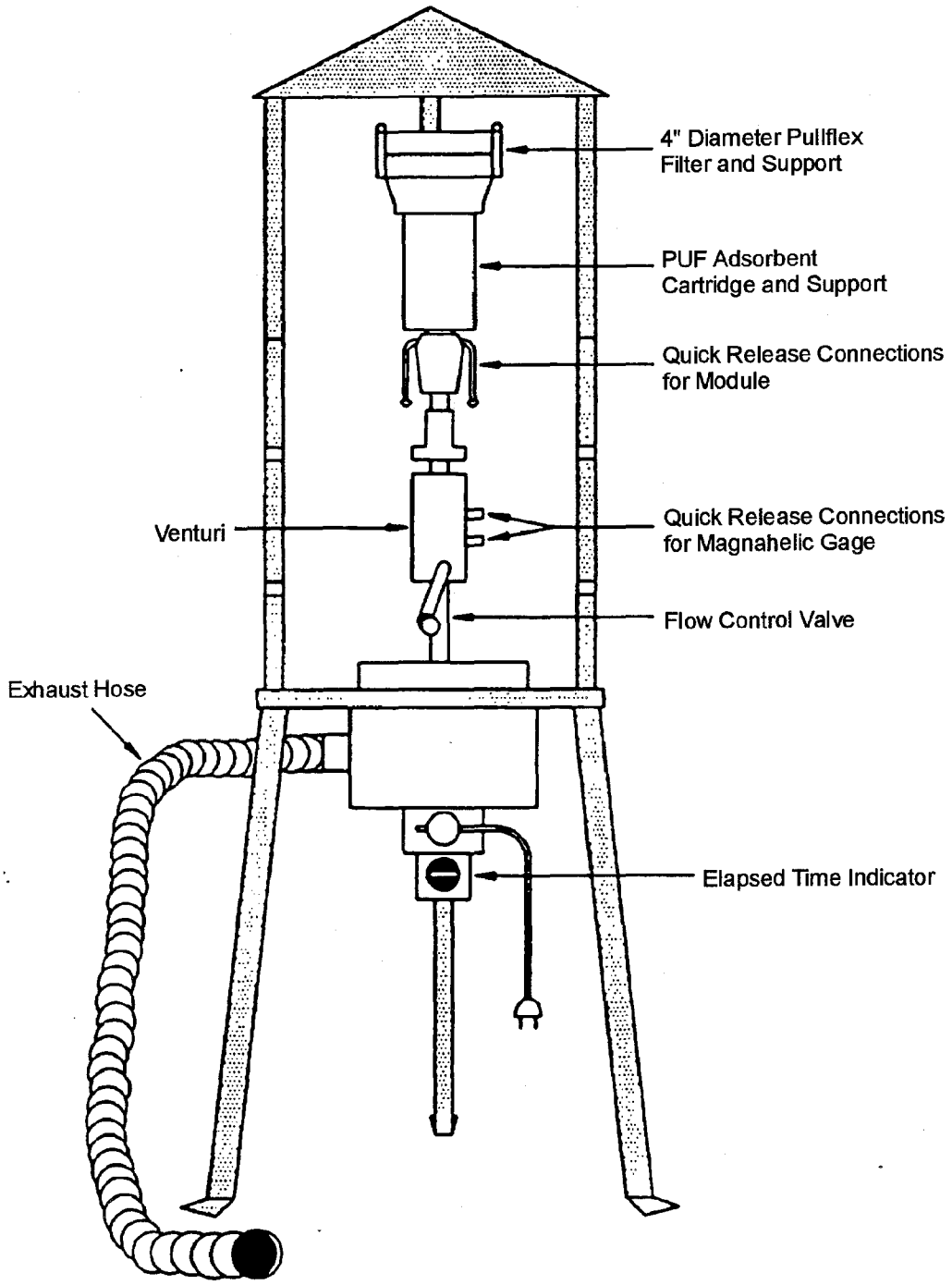

Figure 4. Portable high volume air sampler developed by EPA.

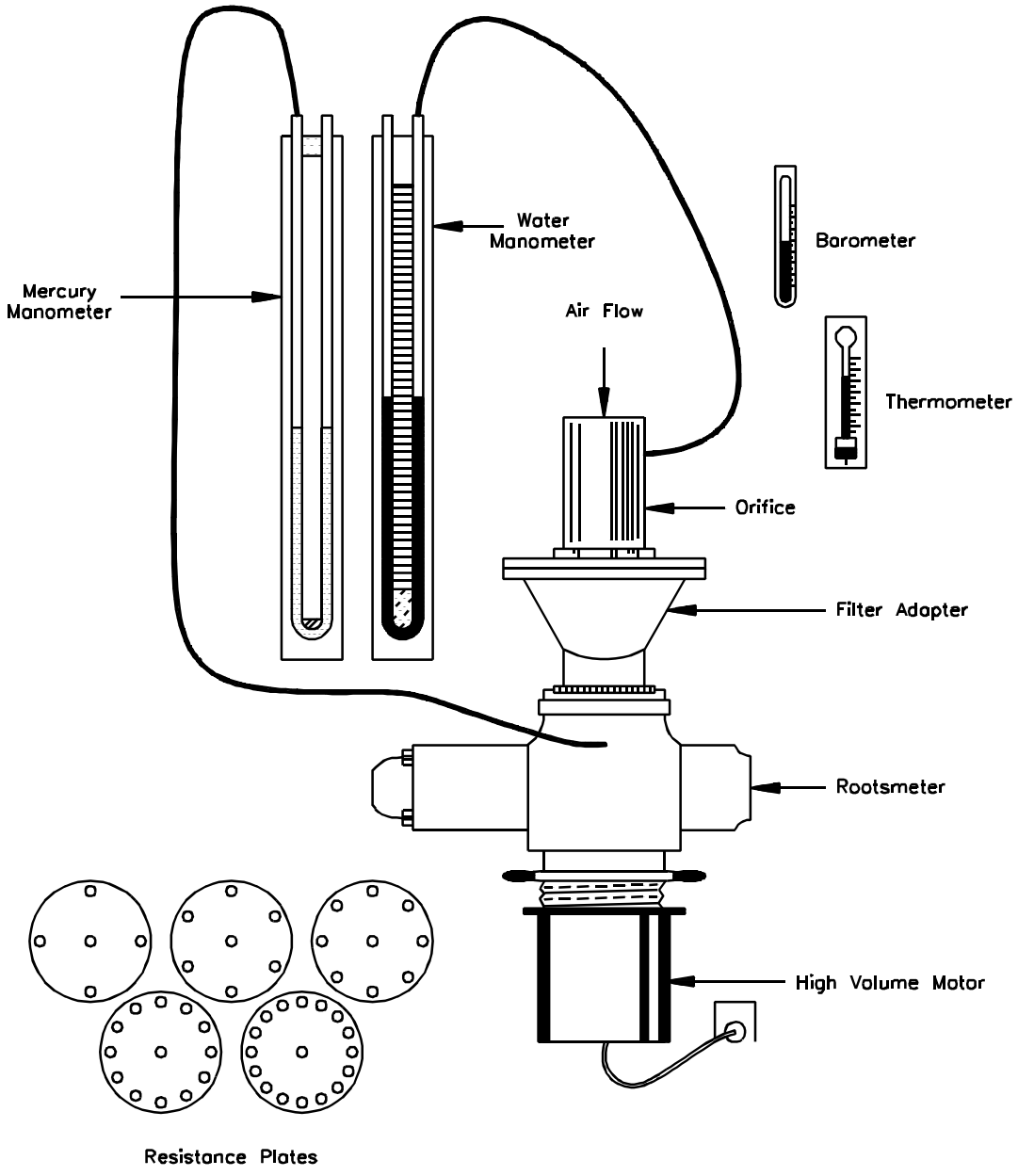

Figure 5. Positive displacement rootsmeter used to calibrate orifice transfer standard.

COMPENDIUM METHOD TO-9A
ORIFICE CALIBRATION DATA SHEET

T_1 _____ Name _____

P_1 _____ mmHg Date _____

Orifice No. _____

Rootsmeter No. _____

Resistance Plants (No. of holes)	Air Volume Measured by Rootsmeter V_m		Standard Volume, V_{std} (std m^3)	Time for Air Volume to Pass Through Rootsmeter, θ (min)	Rootsmeter Pressure Differential, ΔP (mm Hg)	Pressure Drop Across Orifice, ΔH (in. H_2O)	x-Axis Standard Flowrate, Q_{std} (std m^3/min)	Y - axis $\sqrt{\Delta H(P_1/P_{std})(298/T_1)}$ value
	(R^3)	(m^3)						
5	200	5.66						
7	200	5.66						
10	300	8.50						
13	300	8.50						
18	300	8.50						

Factors: $(R^3)(0.02832\ \frac{m^3}{R^3}) = m^3$ and (in. Hg) $25.4\ (\frac{mm\ Hg}{in.\ Hg}) = mm\ Hg$

Calculation Equations:

1. $V_{std} = V_m\ (\frac{P_1 - \Delta P}{P_{std}})(\frac{T_{std}}{T_1})$

where:

$T_{std} = 296°K$
$P_{std} = 760.0$ mm Hg

2. $Q_{std} = \frac{V_{std}}{\theta}$

Figure 6. Orifice calibration data sheet.

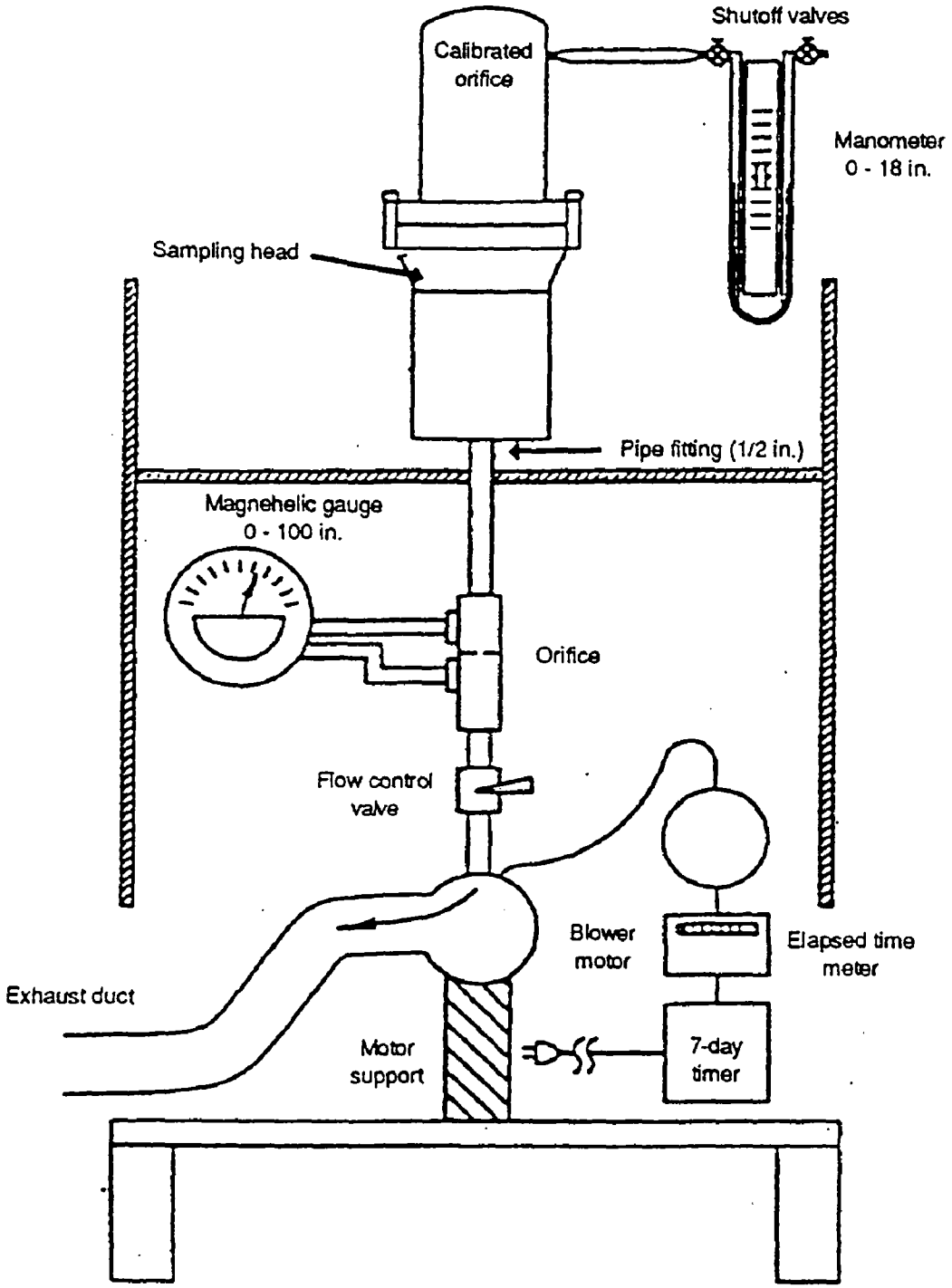

Figure 7. Field calibration configuration of the dioxin/furan sampler.

COMPENDIUM METHOD TO-9A
FIELD CALIBRATION DATA SHEET DIOXIN/FURAN SAMPLER CALIBRATION

Sampler ID: Calibration Orifice ID:

Sampler Location: Job No.:

High Volume Transfer Orifice Data:

Correlation Coefficient (CC1): Slope (M1):

(CC2): (M2):

Intercept (B1):

(B2):

Calibration Date: ____ Time:

Calibration Ambient Temperature: ____°F ____°C CALIBRATOR'S SIGNATURE

Calibration Ambient Barometric Pressure: ____ "Hg ____ mm Hg

Calibration set point (SP): _____

SAMPLER CALIBRATION

Actual values from calibration		Calibrated values		
Orifice manometer, inches (Y1)	Monitor magnehelic, inches (Y2)	Orifice manometer (Y3)	Monitor magnehelic (Y4)	Calculated value orifice flow, scm (X1)
	70			
	60			
	50			
	40			
	30			
	20			
	10			

Definitions

Y1 = Calibration orifice reading, in. H_2O

Y2 = Monitor magnehelic reading, in. H_2O

P_a = Barometric pressure actual, mm Hg

B1 = Manfacturer's Calibration orifice Intercept

M1 = Manufacturer's Calibration orifice manometer slope

Y3 = Calculated value for orifice manometer

= $[Y1(Pa/760)(298/\{Ta + 273\})]^{1/2}$

Y4 = Calculated value for magnehelic

= $[Y2(Pa/760)(298/\{Ta + 273\})]^{1/2}$

X1 = Calculated value orifice flow, scm

$= \frac{Y3 - B1}{M1}$

P_{std} = Barometric pressure standard, 760 mm Hg

T_a = Temperature actual, °C

T_{std} = Temperature standard, 25°C

Figure 8. Orifice transfer field calibration data sheet.

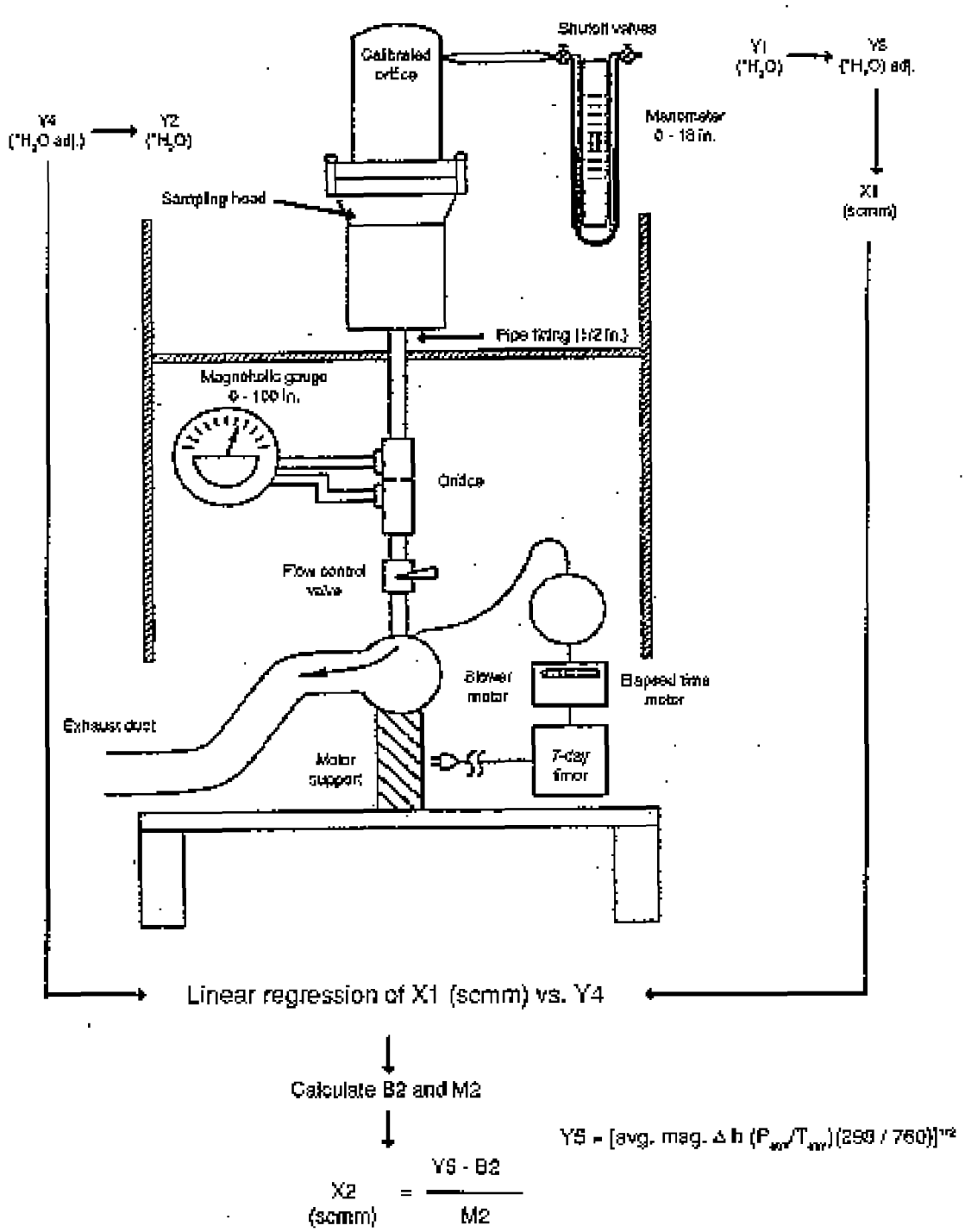

Figure 9. Relationship between orifice transfer standard and flow rate through sampler.

COMPENDIUM METHOD TO-9A
FIELD TEST DATA SHEET
GENERAL INFORMATION

Sampler I.D. No.: _____
Lab PUF Sample No.: _____
Sample location: _____
_____
_____

Operator: _____
Other: _____
_____
_____

PUF Cartridge Certification Date: _____
Date/Time PUF Cartridge Installed: _____
Elapsed Timer: _____
Start _____
Stop _____
Diff. _____
Sampling

M1 _____ **B1** _____
M2 _____ **B2** _____

	Start	Stop
Barometric pressure ("Hg)	_____	_____
Ambient Temperature (°F)	_____	_____
Rain	Yes _____ No _____	Yes _____ No _____

Sampling time
Start _____
Stop _____
Diff. _____

Audit flow check within ±10 of set point
_____ **Yes**
_____ **No**

TIME	TEMP	BAROMETRIC PRESSURE	MAGNEHELIC READING	CALCULATED FLOW RATE (scmm)	READ BY
Avg.					

Comments

_____
_____
_____

Figure 10. Field test data sheet.

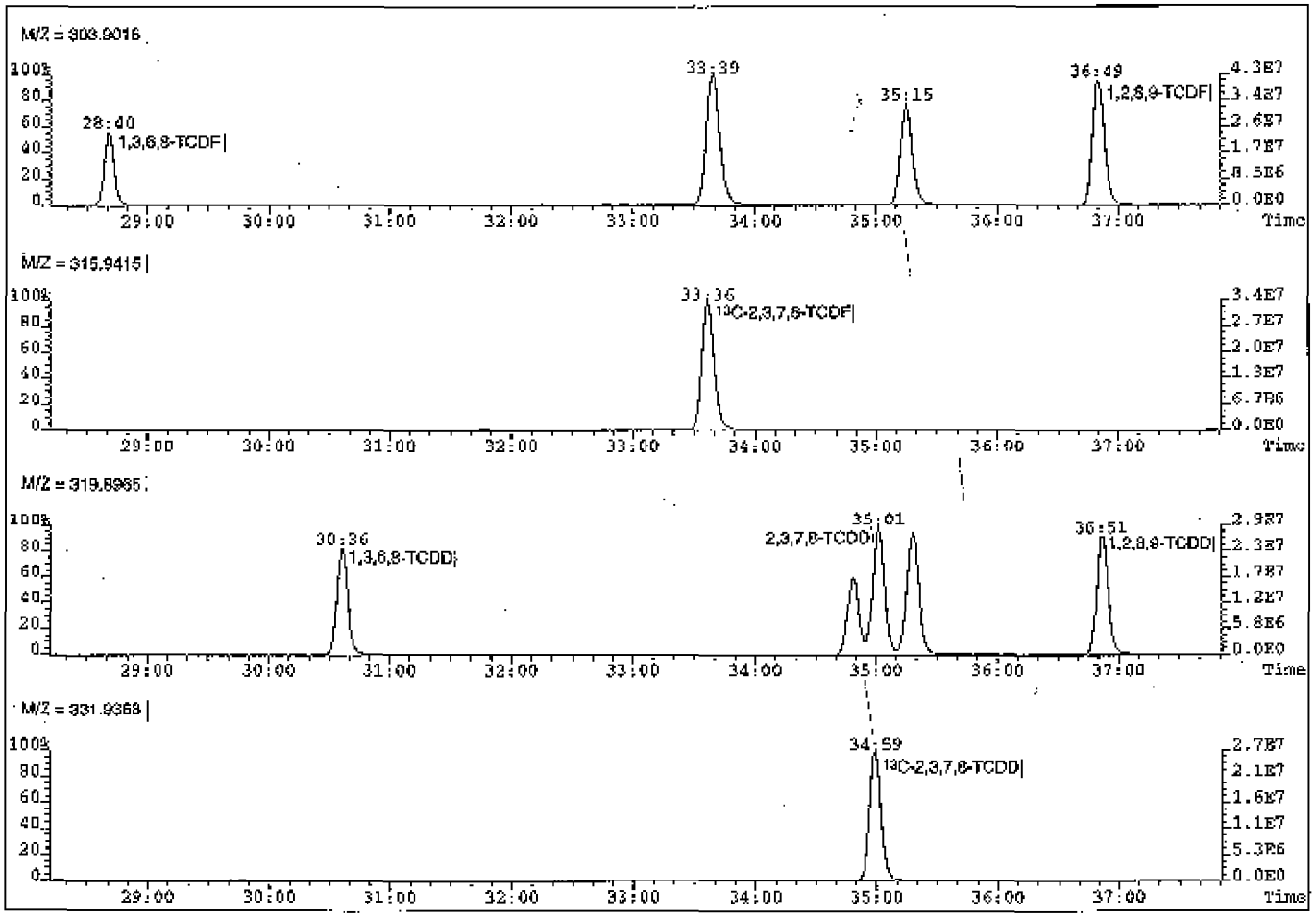

Figure 11. Chromatograms showing the window defining mix. First and last eluting PCDF and PCDD isomer in each group are shown above the respective internal quantification standard (IQS).

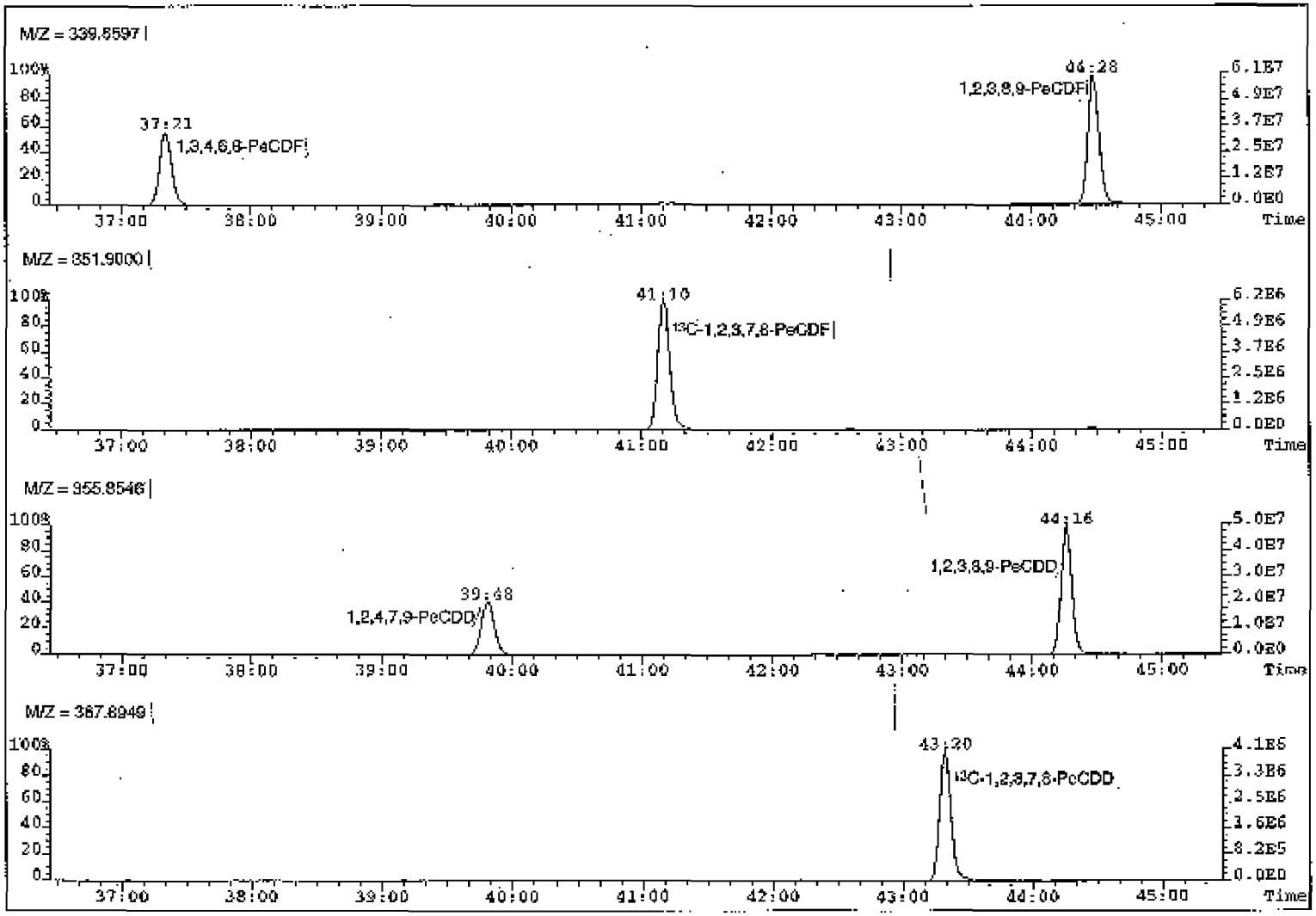

Figure 11. (continued)

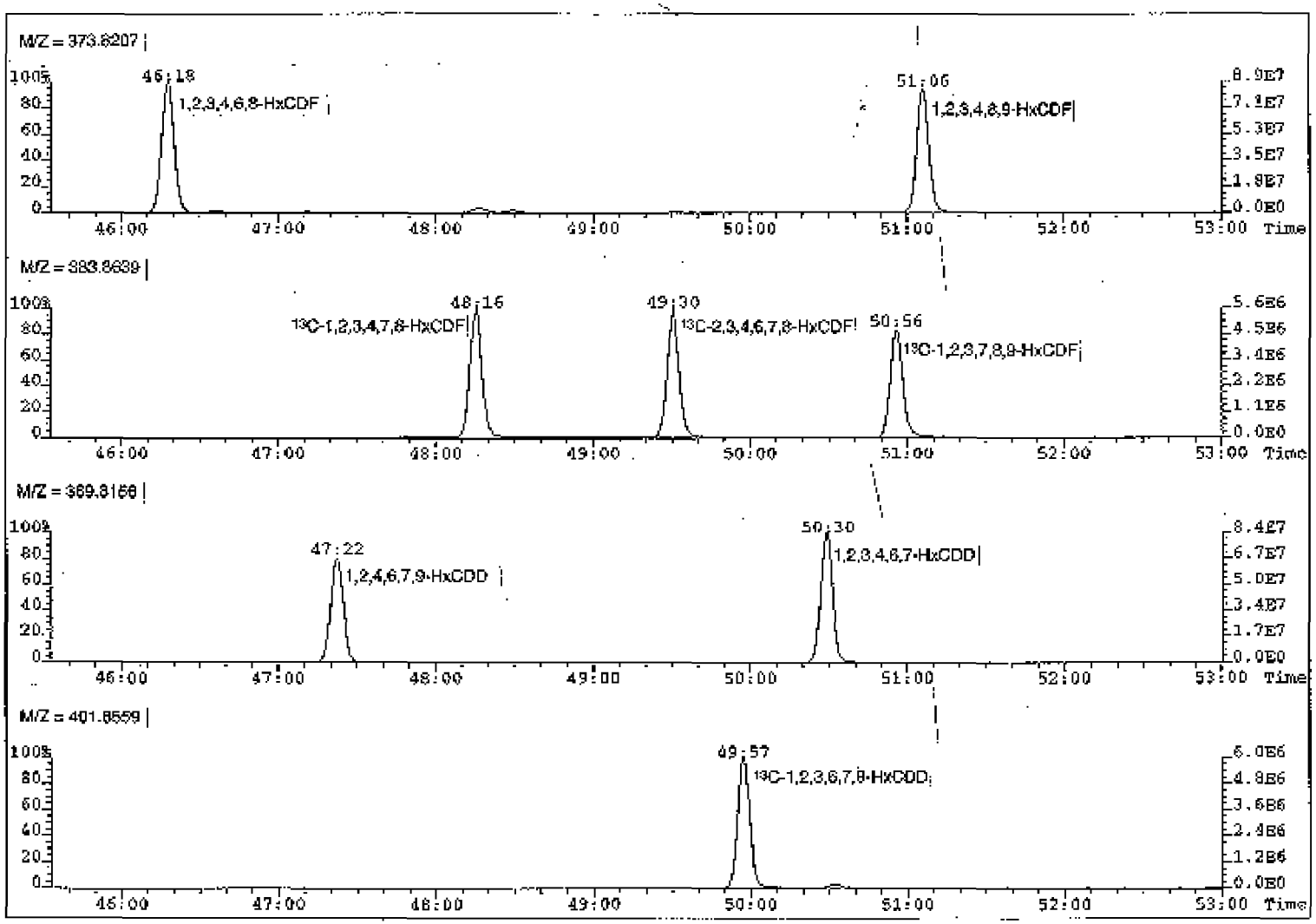

Figure 11. (continued)

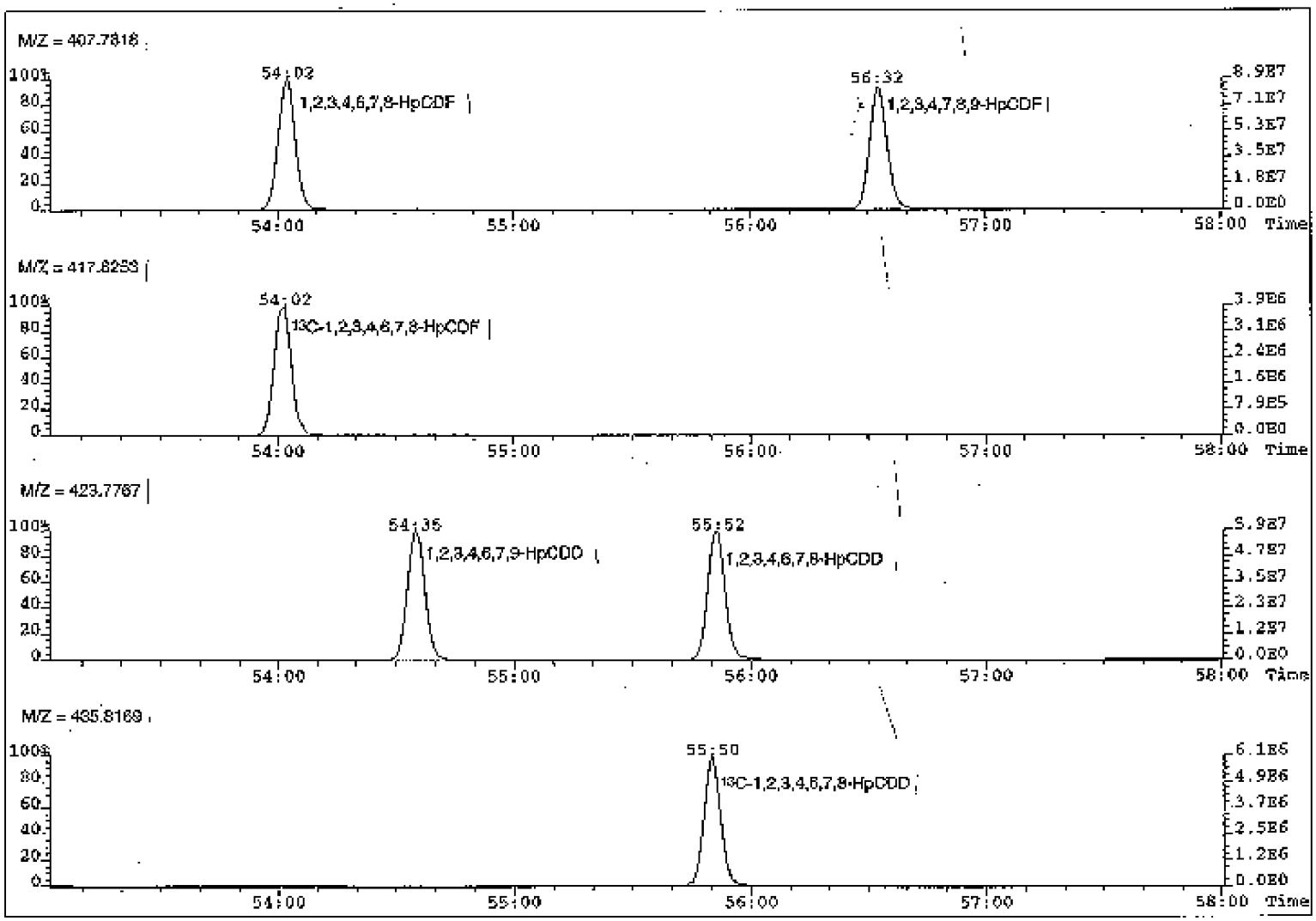

Figure 11. (continued)

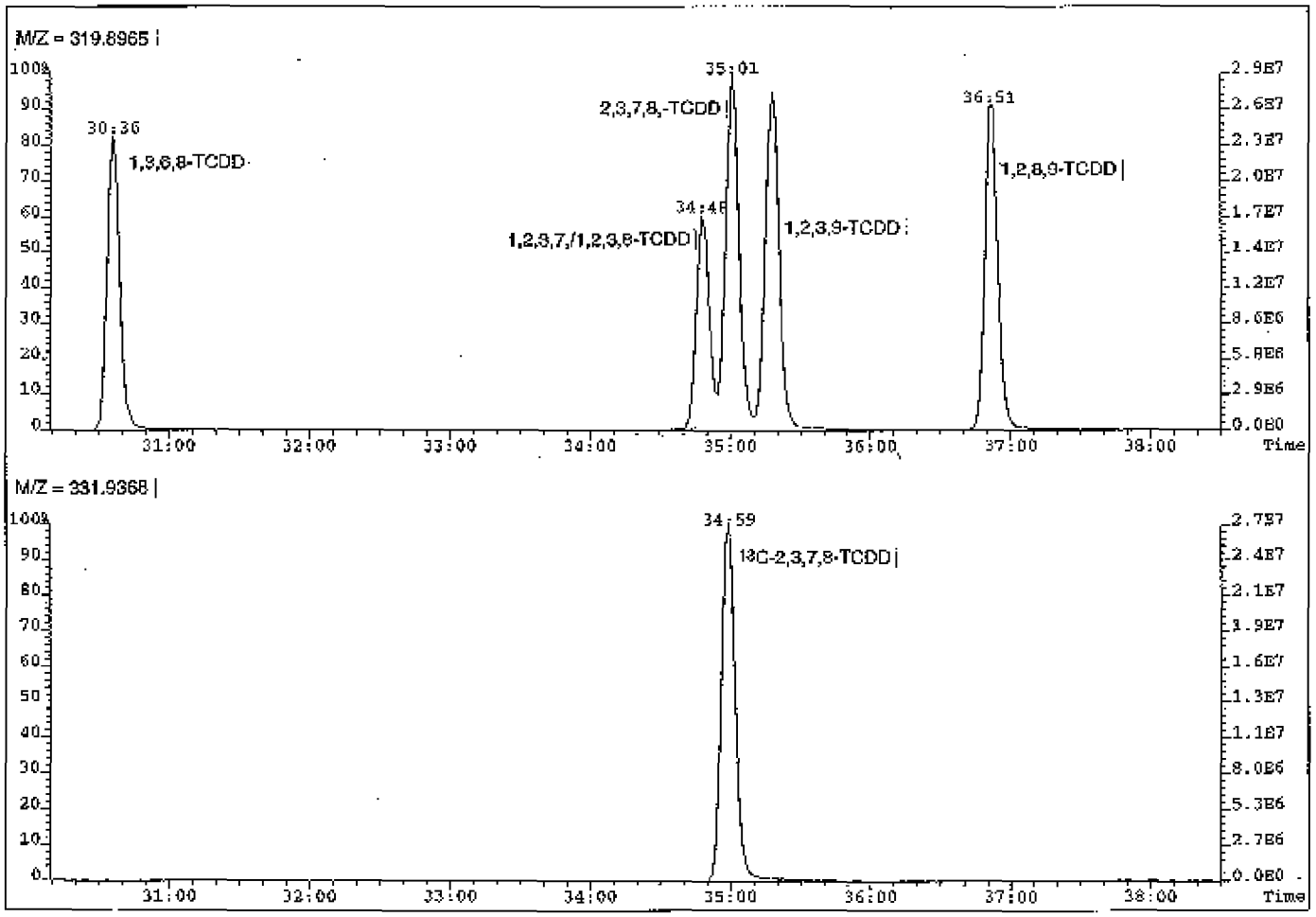

Figure 12. HRGC-HRMS column performance mix showing acceptable separation of 2,3,7,8-TCDD from the adjacent isomers.

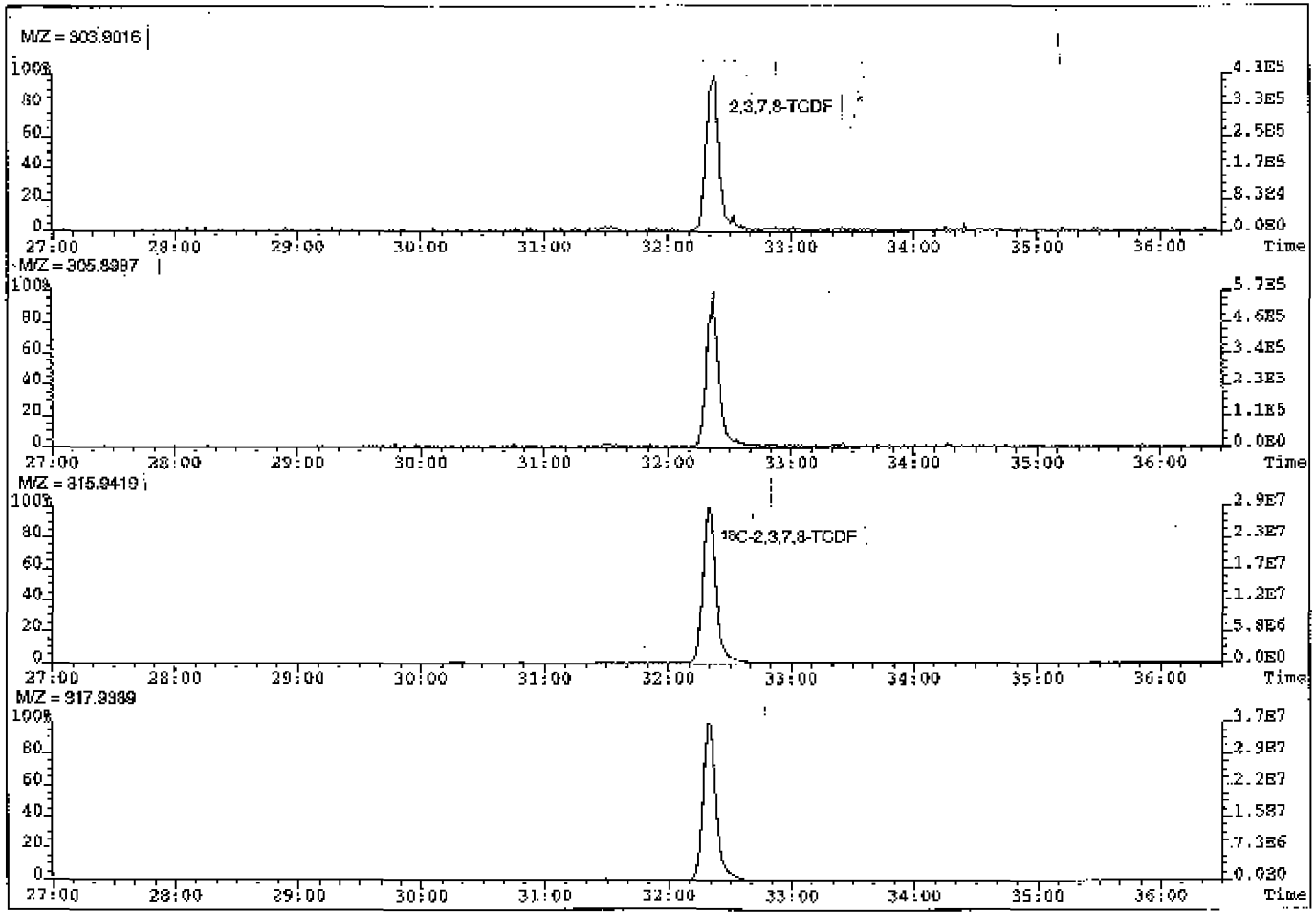

Figure 13. Extracted ion current profiles (EICP) for 2,3,7,8-TCDF and labeled standard.

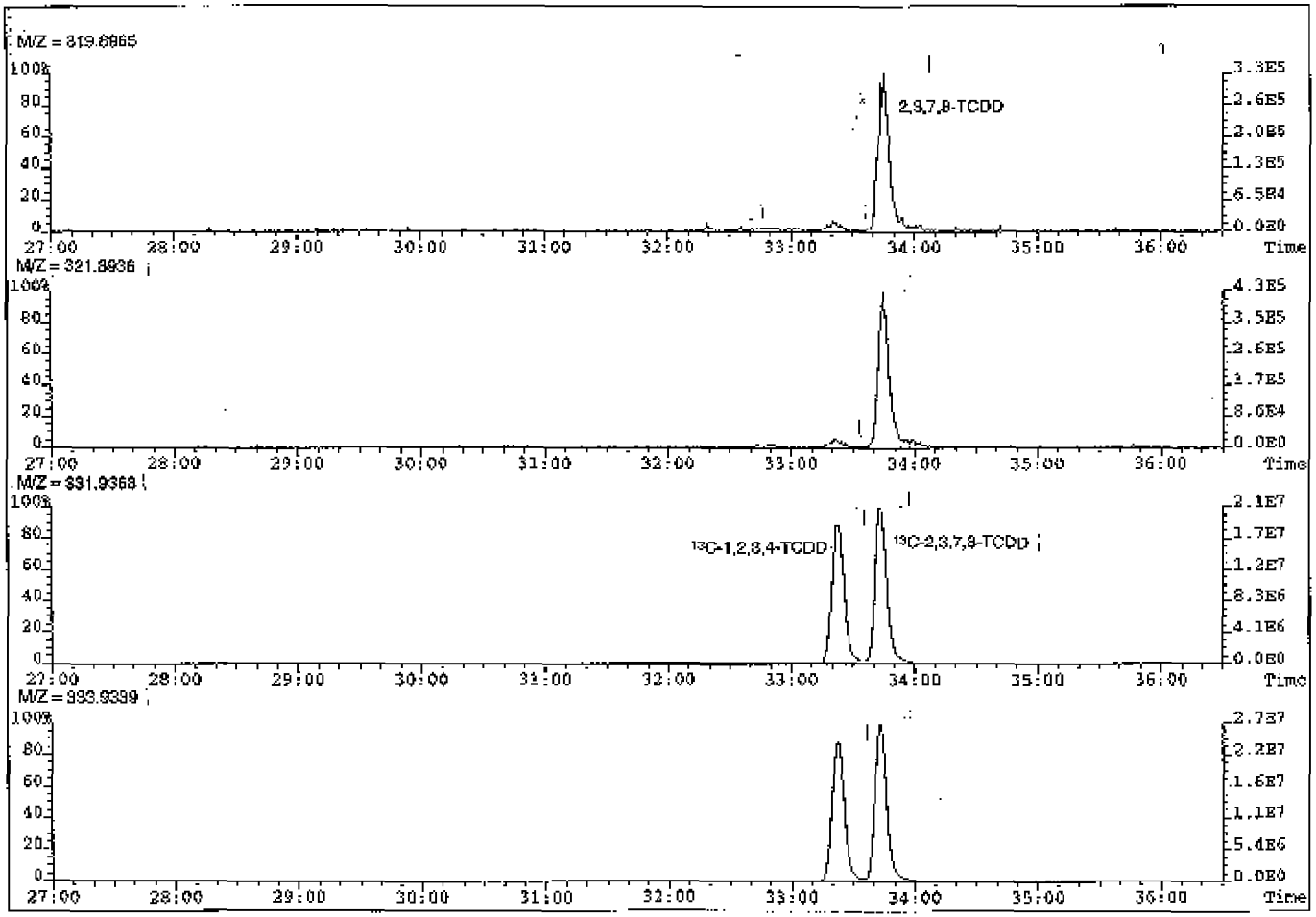

Figure 14. Extracted ion current profiles (HLCP) for 2,3,7,8-TCDD and labeled standard.

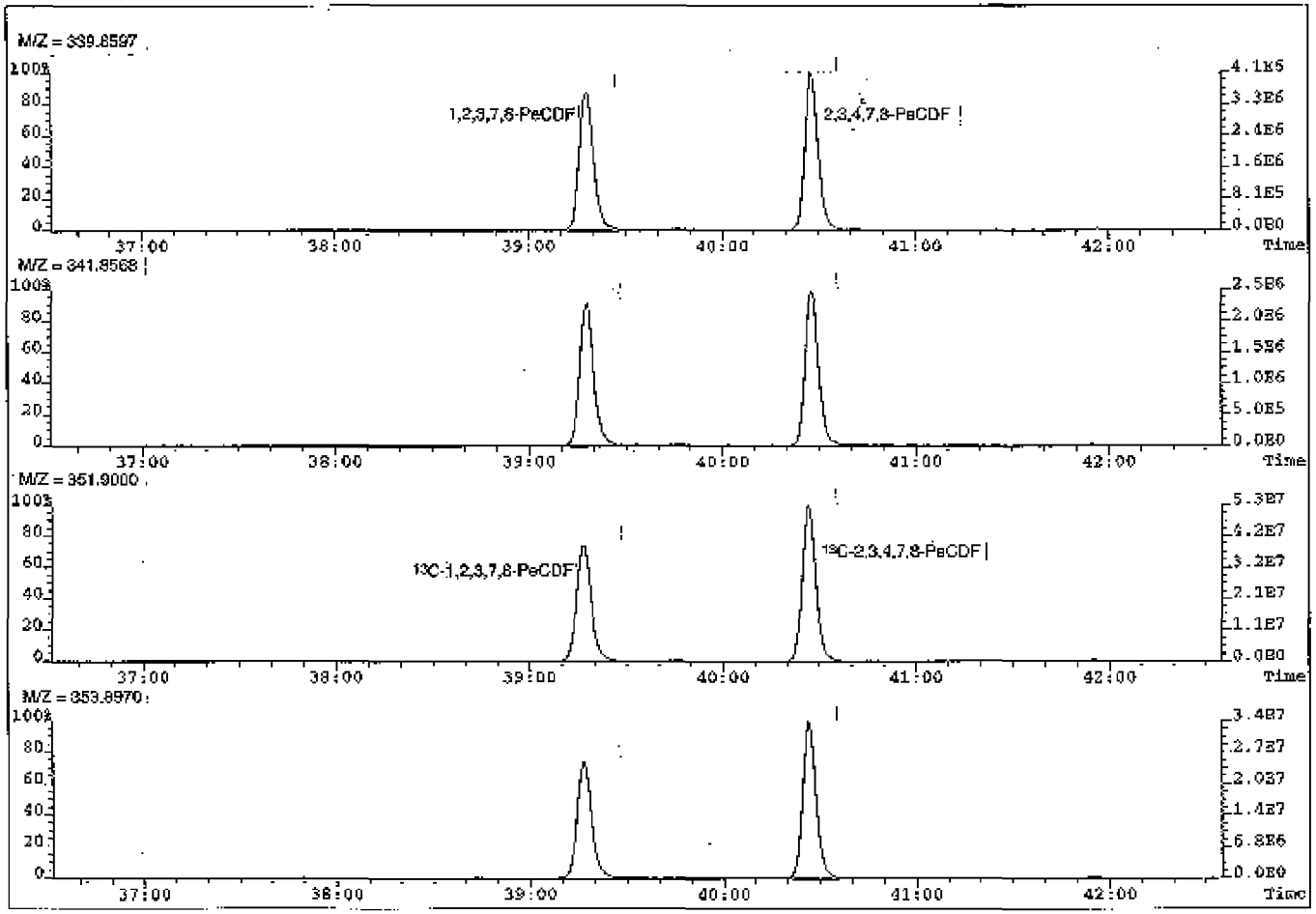

Figure 15. Extracted ion current profiles (ELCP) for 2,3,7,8-substituted PeCDF and labeled standard.

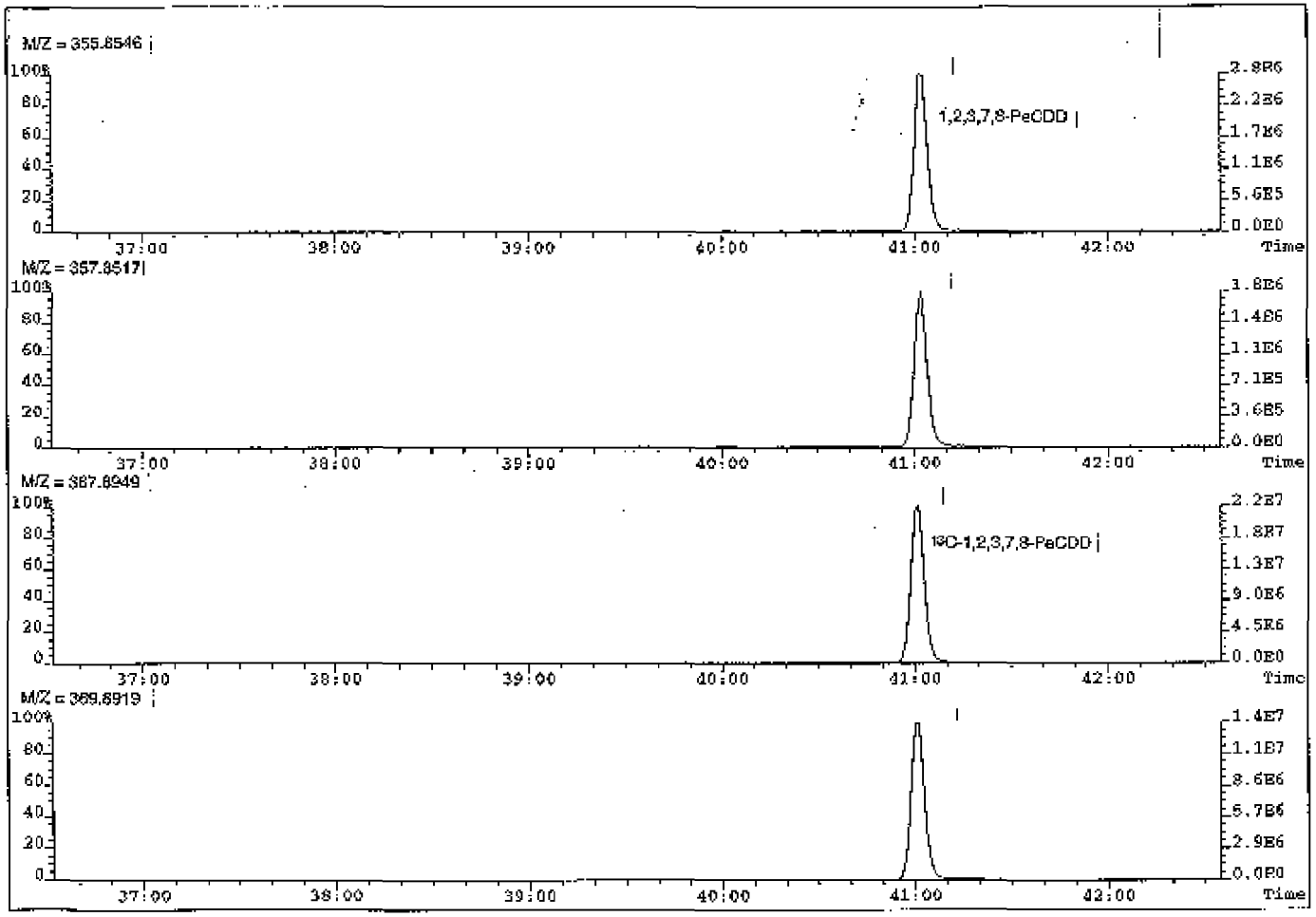

Figure 16. Extracted ion current profiles (EICP) for 2,3,7,8-substituted PeCDD and labeled standard.

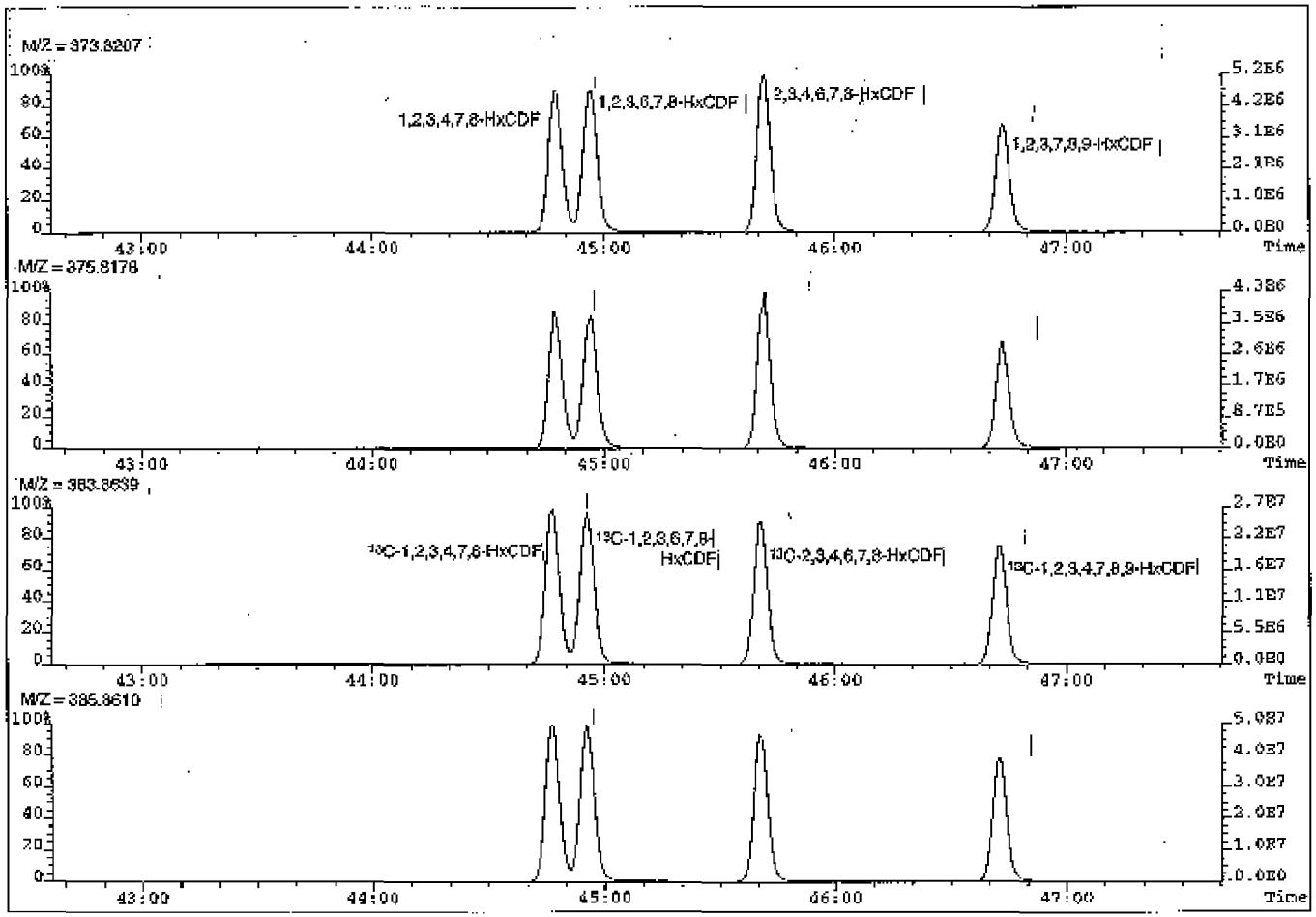

Figure 17. Extracted ion current profiles (EICP) for 2,3,7,8-substituted HxCDF and labeled standard.

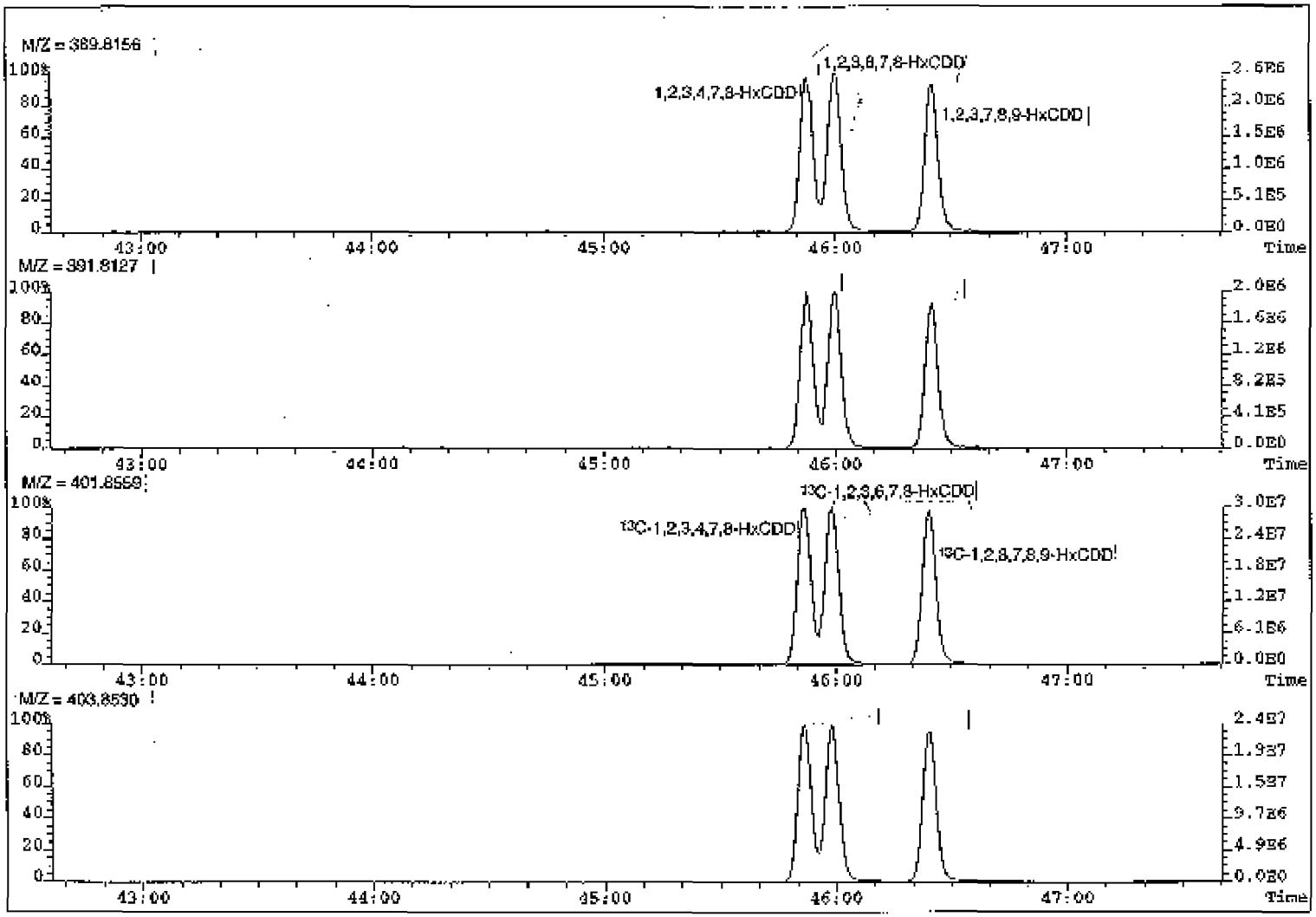

Figure 18. Extracted ion current profiles (EICP) for 2,3,7,8-substituded HxCDD and labeled standard.

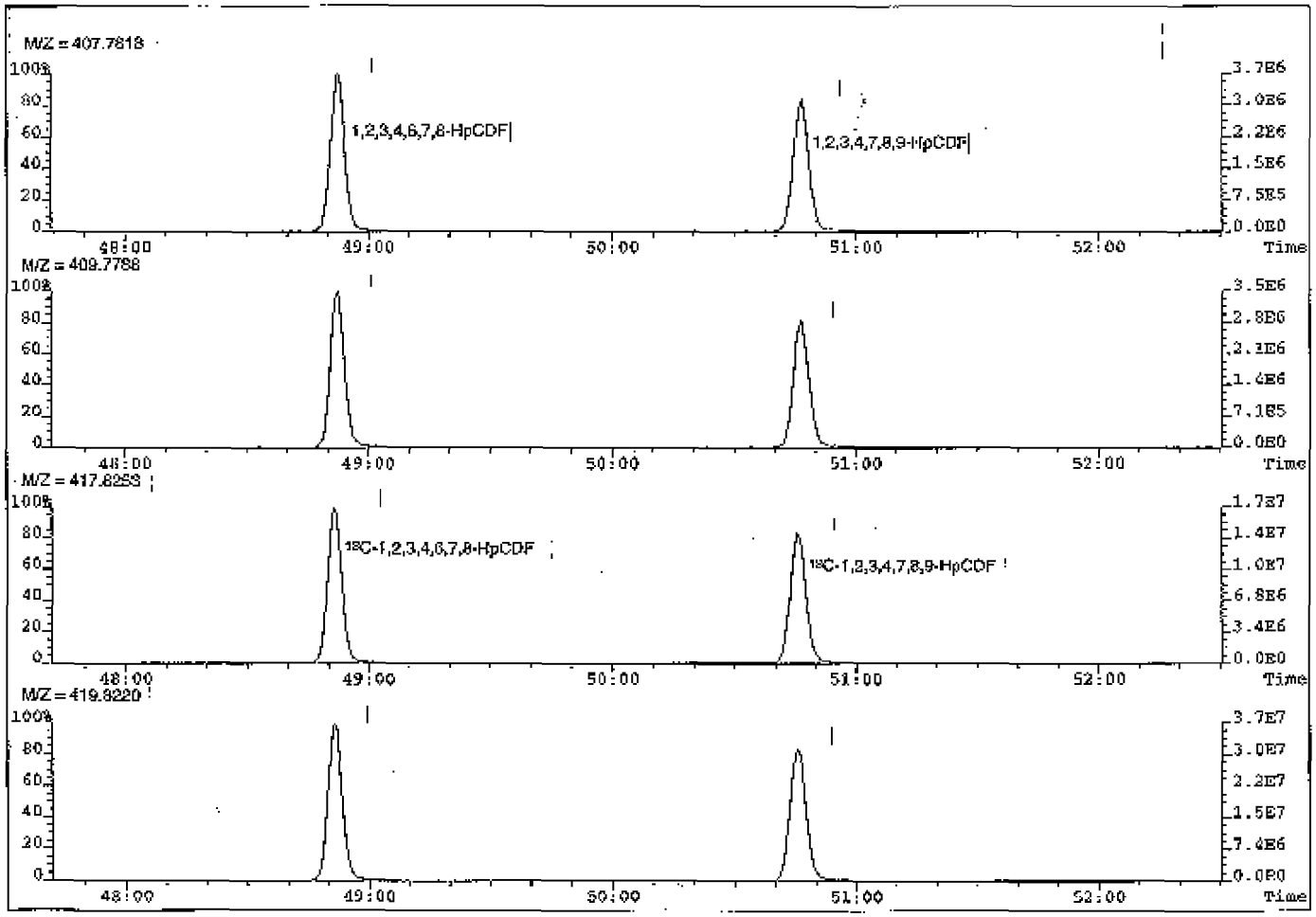

Figure 19. Extracted ion current profiles (EICP) for 2,3,7,8-substituted HpCDF and labeled standard.

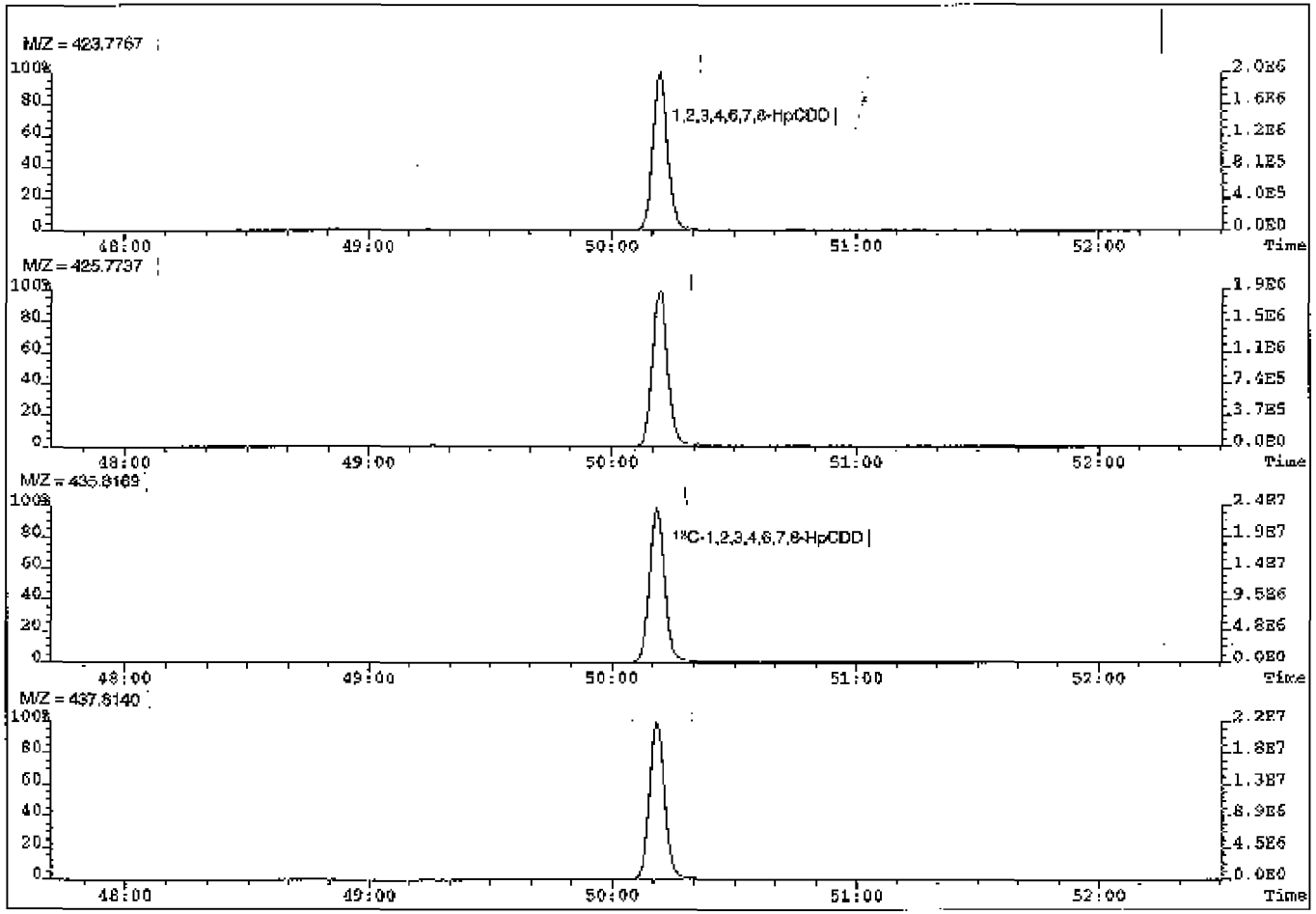

Figure 20. Extracted ion current profiles (EICP) for 2,3,7,8-substituted HpCDD and labeled standard.

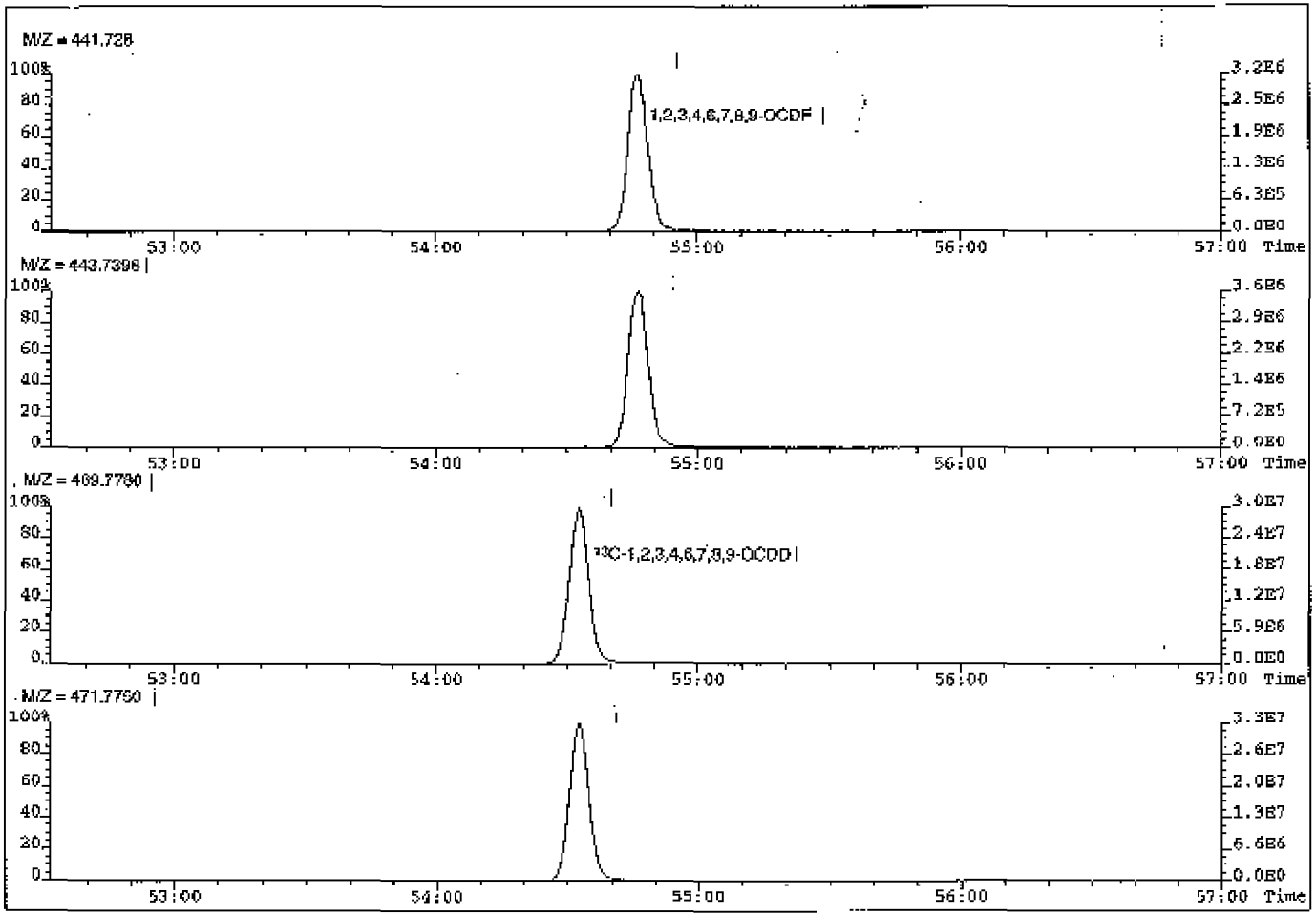

Figure 21. Extracted ion current profiles (EICP) for OCDF and labeled standard.

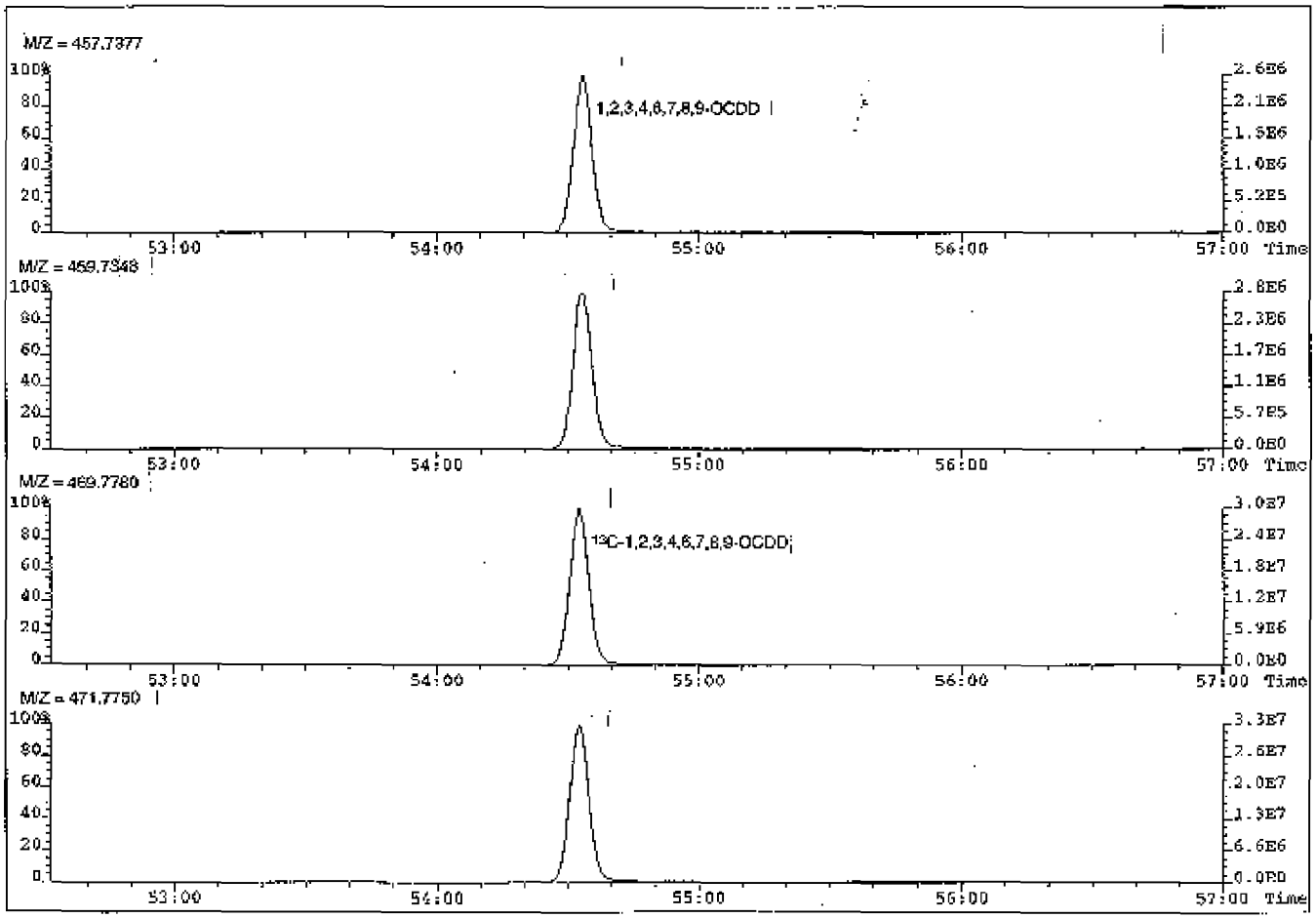

Figure 22. Extracted ion current profiles (EICP) for OCDD and labeled standard.

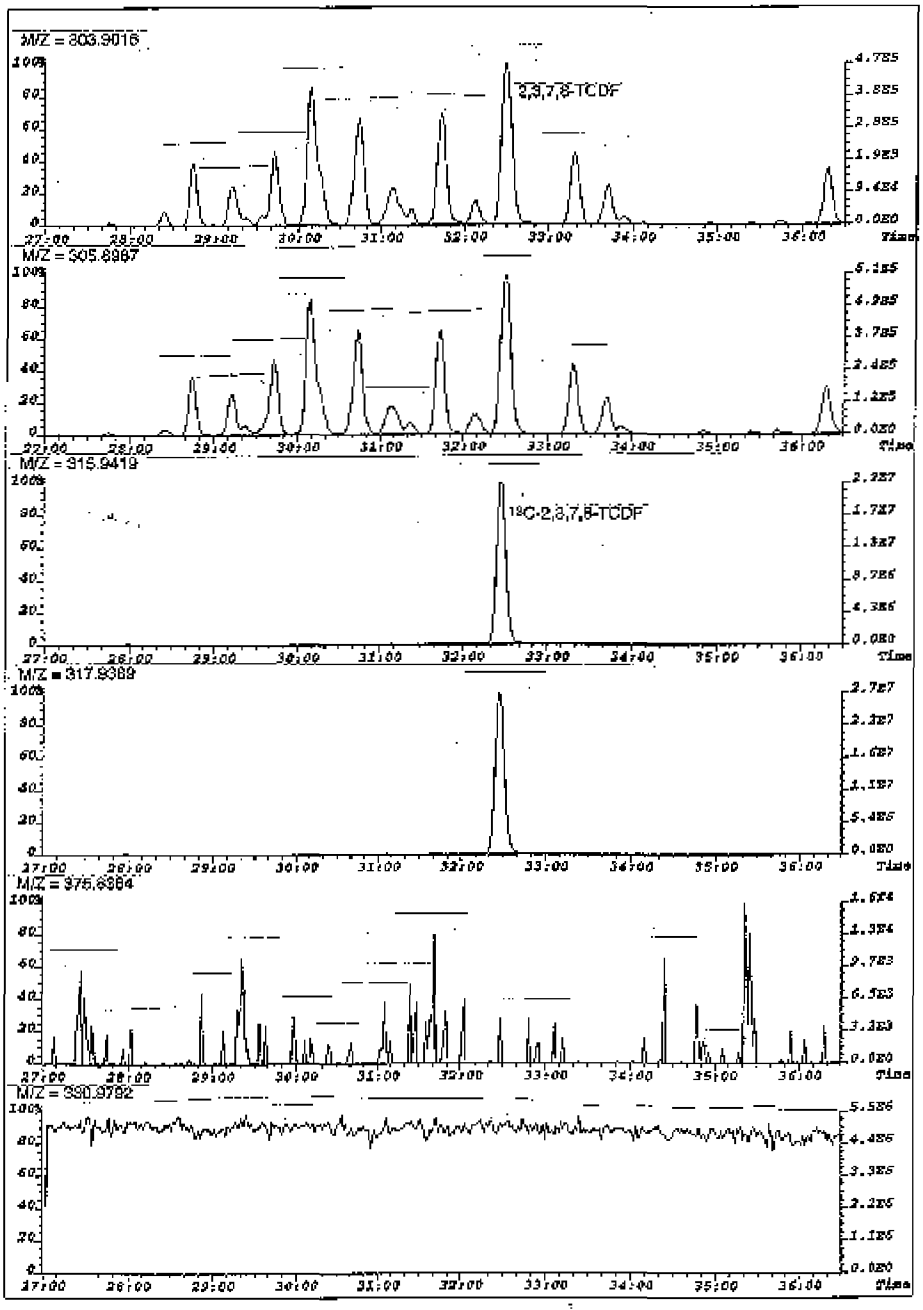

Figure 23. Extracted ion current profiles (EICP) for 2,3,7,8-TCDF and labeled standard in a complex environmental sample showing presence of other TCDF isomers.

This Page Intentionally Left Blank

EPA/625/R-96/010b

Compendium of Methods for the Determination of Toxic Organic Compounds in Ambient Air

Second Edition

Compendium Method TO-10A

Determination Of Pesticides And Polychlorinated Biphenyls In Ambient Air Using Low Volume Polyurethane Foam (PUF) Sampling Followed By Gas Chromatographic/Multi-Detector Detection (GC/MD)

Center for Environmental Research Information
Office of Research and Development
U.S. Environmental Protection Agency
Cincinnati, OH 45268

January 1999

Method TO-10A
Acknowledgements

This Method was prepared for publication in the *Compendium of Methods for the Determination of Toxic Organic Compounds in Ambient Air, Second Edition* (EPA/625/R-96/010b), which was prepared under Contract No. 68-C3-0315, WA No. 3-10, by Midwest Research Institute (MRI), as a subcontractor to Eastern Research Group, Inc. (ERG), and under the sponsorship of the U.S. Environmental Protection Agency (EPA). Justice A. Manning, John Burckle, and Scott R. Hedges, Center for Environmental Research Information (CERI), and Frank F. McElroy, National Exposure Research Laboratory (NERL), all in the EPA Office of Research and Development (ORD), were responsible for overseeing the preparation of this method. Additional support was provided by other members of the Compendia Workgroup, which include:

- John Burckle, U.S. EPA, ORD, Cincinnati, OH
- James L. Cheney, Corps of Engineers, Omaha, NB
- Michael Davis, U.S. EPA, Region 7, KC, KS
- Joseph B. Elkins Jr., U.S. EPA, OAQPS, RTP, NC
- Robert G. Lewis, U.S. EPA, NERL, RTP, NC
- Justice A. Manning, U.S. EPA, ORD, Cincinnati, OH
- William A. McClenny, U.S. EPA, NERL, RTP, NC
- Frank F. McElroy, U.S. EPA, NERL, RTP, NC
- Heidi Schultz, ERG, Lexington, MA
- William T. "Jerry" Winberry, Jr., EnviroTech Solutions, Cary, NC

Method TO-10 was originally published in March of 1989 as one of a series of peer reviewed methods in the second supplement to *"Compendium of Methods for the Determination of Toxic Organic Compounds in Ambient Air,"* EPA 600/4-89-018. In an effort to keep these methods consistent with current technology, Method TO-10 has been revised and updated as Method TO-10A in this Compendium to incorporate new or improved sampling and analytical technologies. In addition, this method incorporates ASTM Method D 4861-94, *Standard Practice for Sampling and Analysis of Pesticides and Polychlorinated Biphenyls in Air*.

This Method is the result of the efforts of many individuals. Gratitude goes to each person involved in the preparation and review of this methodology.

Author(s)
- Robert G. Lewis, U.S. EPA, NERL, RTP, NC

Peer Reviewers
- William T. "Jerry" Winberry, Jr., EnviroTech Solutions, Cary, NC
- Irene D. DeGraff, Supelco, Bellefonte, PA
- Lauren Drees, U.S. EPA, NRMRL, Cincinnati, OH

Finally, recognition is given to Frances Beyer, Lynn Kaufman, Debbie Bond, Cathy Whitaker, and Kathy Johnson of Midwest Research Institute's Administrative Services staff whose dedication and persistence during the development of this manuscript has enabled it's production.

DISCLAIMER

This Compendium has been subjected to the Agency's peer and administrative review, and it has been approved for publication as an EPA document. Mention of trade names or commercial products does not constitute endorsement or recommendation for use.

METHOD TO-10A

Determination Of Pesticides And Polychlorinated Biphenyls In Ambient Air Using Low Volume Polyurethane Foam (PUF) Sampling Followed By Gas Chromatographic/Multi-Detector Detection (GC/MD)

TABLE OF CONTENTS

Page

1. Scope 10A-1

2. Summary of Method 10A-1

3. Significance 10A-2

4. Applicable Documents 10A-2
   4.1 ASTM Standards 10A-2
   4.2 EPA Documents 10A-2
   4.3 Other Documents 10A-3

5. Definitions 10A-3

6. Interferences 10A-3

7. Equipment and Materials 10A-4
   7.1 Materials for Sample Collection 10A-4
   7.2 Equipment for Analysis 10A-5
   7.3 Reagents and Other Materials 10A-5

8. Assembly and Calibration of Sampling System 10A-6
   8.1 Description of Sampling Apparatus 10A-6
   8.2 Calibration of Sampling System 10A-6

9. Preparation of PUF Sampling Cartridges 10A-6

10. Sampling 10A-7

11. Sample Extraction Procedure 10A-8
    11.1 Sample Extraction 10A-8
    11.2 Sample Cleanup 10A-9

TABLE OF CONTENTS (continued)

Page

12. Analytical Procedure 10A-10
    12.1 Analysis of Organochlorine Pesticides by Capillary Gas Chromatography with Electron Capture Detector (GC/ECD) 10A-10
    12.2 Analysis of Organophosphorus Pesticides by Capillary Gas Chromatography with Flame Photometric or Nitrogen-Phosphorus Detectors (GC/FPD/NPD) 10A-11
    12.3 Analysis of Carbamate and Urea Pesticides by Capillary Gas Chromatography with Nitrogen-Phosphorus Detector 10A-11
    12.4 Analysis of Carbamate, Urea, Pyrethroid, and Phenolic Pesticides by High Performance Liquid Chromatography (HPLC) 10A-11
    12.5 Analysis of Pesticides and PCBs by Gas Chromatography with Mass Spectrometry Detection (GC/MS) 10A-12
    12.6 Sample Concentration 10A-12

13. Calculations 10A-13
    13.1 Determination of Concentration 10A-13

14. Sampling and Retention Efficiencies 10A-15
    14.1 General 10A-15
    14.2 Determining SE 10A-15

15. Performance Criteria and Quality Assurance 10A-17
    15.1 Standard Operating Procedures (SOPs) 10A-17
    15.2 Process, Field, and Solvent Blanks 10A-17
    15.3 Sampling Efficiency and Spike Recovery 10A-17
    15.4 Method Precision and Bias 10A-18
    15.5 Method Safety 10A-18

16. References 10A-18

METHOD TO-10A

Determination Of Pesticides And Polychlorinated Biphenyls In Ambient Air Using Low Volume Polyurethane Foam (PUF) Sampling Followed By Gas Chromatographic/Multi-Detector (GC/MD) Detection

1. Scope

1.1 This document describes a method for sampling and analysis of a variety of common pesticides and for polychlorinated biphenyls (PCBs) in ambient air. The procedure is based on the adsorption of chemicals from ambient air on polyurethane foam (PUF) or a combination of PUF and granular sorbent using a low volume sampler.

1.2 The low volume PUF sampling procedure is applicable to multicomponent atmospheres containing common pesticide concentrations from 0.001 to 50 $\mu g/m^3$ over 4- to 24-hour sampling periods. The limits of detection will depend on the nature of the analyte and the length of the sampling period.

1.3 Specific compounds for which the method has been employed are listed in Table 1. The analytical methodology described in Compendium Method TO-10A is currently employed by laboratories throughout the U.S. The sampling methodology has been formulated to meet the needs of common pesticide and PCB sampling in ambient air.

1.4 Compendium Method TO-10 was originally published in 1989. The method was further modified for indoor air application in 1990. In an effort to keep the method consistent with current technology, Compendium Method TO-10 has incorporated ASTM Method D4861-94 (1) and is published here as Compendium Method TO-10A.

2. Summary of Method

2.1 A low-volume (1 to 5 L/minute) sample is used to collect vapors on a sorbent cartridge containing PUF or PUF in combination with another solid sorbent. Airborne particles may also be collected, but the sampling efficiency is not known (2).

2.2 Pesticides and other chemicals are extracted from the sorbent cartridge with 5 percent diethyl ether in hexane and determined by gas chromatography coupled with an electron capture detector (ECD), nitrogen-phosphorus detector (NPD), flame photometric detector (FPD), Hall electrolytic conductivity detector (HECD), or a mass spectrometer (MS). For common pesticides, high performance liquid chromatography (HPLC) coupled with an ultraviolet (UV) detector or electrochemical detector may be preferable. This method describes the use of an electron capture detector.

2.3 Interferences resulting from analytes having similar retention times during GC analysis are resolved by improving the resolution or separation, such as by changing the chromatographic column or operating parameters, or by fractionating the sample by column chromatography.

3. Significance

3.1 Pesticide usage and environmental distribution are common to rural and urban areas of the United States. The application of pesticides can cause potential adverse health effects to humans by contaminating soil, water, air, plants, and animal life. However, human exposure to PCBs continues to be a problem because of their presence in the environment.

3.2 Many pesticides and PCBs exhibit bioaccumulative, chronic health effects; therefore, monitoring the presence of these compounds in ambient air is of great importance.

3.3 Use of a portable, low volume PUF sampling system allows the user flexibility in locating the apparatus. The user can place the apparatus in a stationary or mobile location. The portable sampling apparatus may be positioned in a vertical or horizontal stationary location (if necessary, accompanied with supporting structure). Mobile positioning of the system can be accomplished by attaching the apparatus to a person to test air in the individual's breathing zone.

3.4 Moreover, this method has been successfully applied to measurement of common pesticides in outdoor air, indoor air and for personal respiratory exposure monitoring (3).

4. Applicable Documents

4.1 ASTM Standards

- D1356 *Definition of Terms Relating to Atmospheric Sampling and Analysis*
- D4861-94 *Standard Practice for Sampling and Analysis of Pesticides and Polychlorinated Biphenyls in Air*
- E260 *Recommended Practice for General Gas Chromatography Procedures*
- E355 *Practice for Gas Chromatography Terms and Relationships*
- D3686 *Practice for Sampling Atmospheres to Collect Organic Compound Vapors (Activated Charcoal Tube Adsorption Method*
- D3687 *Practice for Analysis of Organic Compound Vapors Collected by the Activated Charcoal Tube Adsorption*
- D4185 *Practice for Measurement of Metals in Workplace Atmosphere by Atomic Absorption Spectrophotometry*

4.2 EPA Documents

- *Compendium of Methods for the Determination of Toxic Organic Compounds in Ambient Air: Method TO-10, Second Supplement,* U. S. Environmental Protection Agency, EPA 600/4-89-018, March 1989.
- *Manual of Analytical Methods for Determination of Pesticides in Humans and Environmental Standards,* U. S. Environmental Protection Agency, EPA 600/8-80-038, June 1980.
- *Compendium of Methods for the Determination of Air Pollutants in Indoor Air: Method IP-8,* U. S. Environmental Protection Agency, EPA 600/4-90-010, May 1990.

4.3 Other Documents

- Code of Federal Regulations, Title 40, Part 136, Method 604

5. Definitions

[Note: Definitions used in this document and in any user-prepared Standard operating procedures (SOPs) should be consistent with ASTM D1356, E260, and E355. All abbreviations and symbols are defined within this document at point of use.]

5.1 Sampling efficiency (SE)-ability of the sampling medium to trap analytes of interest. The percentage of the analyte of interest collected and retained by the sampling medium when it is introduced as a vapor in air or nitrogen into the air sampler and the sampler is operated under normal conditions for a period of time equal to or greater than that required for the intended use is indicated by %SE.

5.2 Retention efficiency (RE)-ability of sampling medium to retain a compound added (spiked) to it in liquid solution.

5.3 Static retention efficiency-ability of the sampling medium to retain the solution spike when the sample cartridge is stored under clean, quiescent conditions for the duration of the test period.

5.4 Dynamic retention efficiency (RE_d)-ability of the sampling medium to retain the solution spike when air or nitrogen is drawn through the sampling cartridge under normal operating conditions for the duration of the test period. The dynamic RE is normally equal to or less than the SE.

5.5 Retention time (RT)-time to elute a specific chemical from a chromatographic column, for a specific carrier gas flow rate, measured from the time the chemical is injected into the gas stream until it appears at the detector.

5.6 Relative retention time (RRT)-a rate of RTs for two chemicals for the same chromatographic column and carrier gas flow rate, where the denominator represents a reference chemical.

5.7 Surrogate standard-a chemically inert compound (not expected to occur in the environmental sample) that is added to each sample, blank, and matrix-spiked sample before extraction and analysis. The recovery of the surrogate standard is used to monitor unusual matrix effects, gross sample processing errors, etc. Surrogate recovery is evaluated for acceptance by determining whether the measured concentration falls within acceptable limits.

6. Interferences

6.1 Any gas or liquid chromatographic separation of complex mixtures of organic chemicals is subject to serious interference problems due to coelution of two or more compounds. The use of capillary or microbore columns with superior resolution or two or more columns of different polarity will frequently eliminate these problems. In addition, selectivity may be further enhanced by use of a MS operated in the selected ion monitoring (SIM) mode as the GC detector. In this mode, co-eluting compounds can often be determined.

6.2 The ECD responds to a wide variety of organic compounds. It is likely that such compounds will be encountered as interferences during GC/ECD analysis. The NPD, FPD, and HECD detectors are element specific, but are still subject to interferences. UV detectors for HPLC are nearly universal, and the electrochemical detector may also respond to a variety of chemicals. Mass spectrometric analyses will generally provide positive identification of specific compounds.

6.3 PCBs and certain organochlorine pesticides (e.g., chlordane) are complex mixtures of individual compounds which can cause difficulty in accurately quantifying a particular formulation in a multiple component mixture. PCBs may interfere with the determination of pesticides.

6.4 Contamination of glassware and sampling apparatus with traces of pesticides or PCBs can be a major source of error, particularly at lower analyte concentrations. Careful attention to cleaning and handling procedures is required during all steps of sampling and analysis to minimize this source of error.

6.5 The general approaches listed below should be followed to minimize interferences.

6.5.1 Polar compounds, including certain pesticides (e.g., organophosphorus and carbamate classes) can be removed by column chromatography on alumina. Alumina clean-up will permit analysis of most organochlorine pesticides and PCBs (4).

6.5.2 PCBs may be separated from other organochlorine pesticides by column chromatography on silicic acid (5,6).

6.5.3 Many pesticides can be fractionated into groups by column chromatography on Florisil (6).

7. Equipment and Materials

7.1 Materials for Sample Collection

7.1.1 Continuous-Flow Sampling Pump (see Figure 1). The pump should provide a constant air flow ($\leq\pm5\%$), be quiet and unobtrusive, with a flow rate of 1 to 5 L/min. Sources of equipment are Supelco, Supelco Park, Bellefonte, PA; SKC, 334 Valley View Road, Eighty Four, PA and other manufacturers.

7.1.2 Sampling Cartridge (see Figure 2). Constructed from a 20-mm (I.D.) x 10-cm borosilicate glass tube drawn down to a 7-mm (O.D.) open connection for attachment to the pump by way of flexible tubing (see Figure 1).

7.1.3 Sorbent, Polyurethane Foam (PUF). Cut into a cylinder, 22-mm I.D. and 7.6-cm long, fitted under slight compression inside the cartridge. The PUF should be of the polyether type, (density of 0.0225 g/cm^3). This is the type of foam used for furniture upholstery, pillows, and mattresses. The PUF cylinders (plugs) should be slightly larger in diameter than the internal diameter of the cartridge. The PUF sorbent may be cut by one of the following means:

- With a high-speed cutting tool, such as a motorized cork borer. Distilled water should be used to lubricate the cutting tool.
- With a hot wire cutter. Care should be exercised to prevent thermal degradation of the foam.
- With scissors, while plugs are compressed between the 22-mm circular templates.

Alternatively, pre-extracted PUF plugs and glass cartridges may be obtained commercially.

7.1.4 Particle Filter. The collection efficiency of PUF for small-diameter (0.1 to 1 μm) airborne particles is only about 20% (7). However, most pesticides and PCBs exist in air under steady-state conditions primarily as vapors (8). Most particulate-associated pesticides or PCBs, if any, will also tend to be vaporized from filters after collection (9). Collocated sampling with and without a quartz-fiber pre-filter has yielded indistinguishable results for a broad spectrum of pesticides and PCBs found in indoor air (10).

7.1.4.1 An open-face filter may be attached to the sampling cartridge by means of a union for 1-in. (25.4-mm) tubing.

7.1.4.2 A 32-mm diameter quartz microfiber filter (e.g., Palifelex® type 2500 QAT-UP) is placed in the open end of the union and supported by means of a screen or perforated metal plate [e.g., a 304-stainless steel disk, 0.0312-in. (0.8-mm) thick with 1/16-in. (1.6-mm) diameter round perforations at 132 holes per in.^{2} (20 holes/cm^2), 41% open area.]. A 32-mm Viton® O-ring is placed between the filter and outer nut to effect a seal (see Figure 3). This filter holder is available from Supelco Park, Bellefonte, PA; SKC, 334 Forty Eight, PA; and other manufacturers.

7.1.5 Size-Selective Impactor Inlet. A size-selective impactor inlet with an average particle-size cut-point of 2.5 μm or 10 μm mean diameter at a sampling rate of 4 L/min may be used to exclude nonrespirable airborne particulate matter (11). This inlet, particle filter support, sampling cartridge holders are available commercially from Supelco, Supelco Park, Bellefonte, PA; SKC, 334 Forty Eight, PA and University Research Glassware (URG), Chapel Hill, NC.

7.1.6 Tenax-TA. 60/80 mesh, 2,6-diphenylphenylene oxide polymer. Commercially available from Supelco, Supelco Park, Bellefonte, PA and SKC, 334 Forty Eight, PA.

7.2 Equipment for Analysis

7.2.1 Gas Chromatograph (GC). The GC system should be equipped with appropriate detector(s) and either an isothermally controlled or temperature programmed heating oven. Improved detection limits may be obtained with a GC equipped with a cool on-column or splitless injector.

7.2.2 Gas Chromatographic Column. As an example, a 0.32 mm (I.D.) x 30 m DB-5, DB-17, DB-608, and DB-1701 are available. Other columns may also provide acceptable results.

7.2.3 HPLC Column. As an example, a 4.6-mm x 25-cm Zorbax SIL or μBondpak C-18. Other columns may also provide acceptable results.

7.2.4 Microsyringes. 5 μL volume or other appropriate sizes.

7.3 Reagents and Other Materials

7.3.1 Round Bottom Flasks. 500 mL, T 24/40 joints, best source.
7.3.2 Capacity Soxhlet Extractors. 300 mL, with reflux condensers, best source.
7.3.3 Kuderna-Danish Concentrator. 500 mL, with Snyder columns, best source.
7.3.4 Graduated Concentrator Tubes. 10 mL, with 19/22 stoppers, best source.
7.3.5 Graduated Concentrator Tubes. 1 mL, with 14/20 stoppers, best source.
7.3.6 TFE Fluorocarbon Tape. 1/2 in., best source.
7.3.7 Filter Tubes. Size 40 mm (I.D.) x 80 mm.
7.3.8 Serum Vials. 1 mL and 5 mL, fitted with caps lined with TFE fluorocarbon.
7.3.9 Pasteur Pipettes. 9 in., best source.
7.3.10 Glass Wool. Fired at 500°C, best source.
7.3.11 Boiling Chips. Fired at 500°C, best source..
7.3.12 Forceps. Stainless steel, 12 in., best source.
7.3.13 Gloves. Latex or precleaned (5% ether/hexane Soxhlet extracted) cotton.

7.3.14 Steam Bath.
7.3.15 Heating Mantles. 500 mL.
7.3.16 Analytical Evaporator. Nitrogen blow-down.
7.3.17 Acetone. Pesticide quality.
7.3.18 n-Hexane. Pesticide quality.
7.3.19 Diethyl Ether. Preserved with 2% ethanol.
7.3.20 Sodium Sulfate. Anhydrous analytical grade.
7.3.21 Alumina. Activity Grade IV, 100/200 mesh.
7.3.22 Glass Chromatographic Column. 2-mm I.D. x 15-cm long.
7.3.23 Soxhlet Extraction System. Including Soxhlet extractors (500 and 300 mL), variable voltage transformers, and cooling water source.
7.3.24 Vacuum Oven. Connected to water aspirator.
7.3.25 Die.
7.3.26 Ice Chest.
7.3.27 Silicic Acid. Pesticide grade.
7.3.28 Octachloronaphthalene (OCN). Research grade.
7.3.29 Florisil. Pesticide grade.

8. Assembly and Calibration of Sampling System

8.1 Description of Sampling Apparatus

8.1.1 A typical sampling arrangement utilizing a personal air pump is shown in Figure 1. This method is designed to use air sampling pumps capable of pulling air through the sampling cartridge at flow rates of 1 to 5 L/min. The method writeup presents the use of this device.

8.1.2 The sampling cartridge (see Figure 2) consists of a glass sampling cartridge in which the PUF plug or PUF/Tenax® TA "sandwich" is retained.

8.2 Calibration of Sampling System

8.2.1 Air flow through the sampling system is calibrated by the assembly shown in Figure 4. All air sampler must be calibrated in the laboratory before and after each sample collection period, using the procedure described below.

8.2.2 For accurate calibration, attach the sampling cartridge in-line during calibration. Vinyl bubble tubing or other means (e.g., rubber stopper or glass joint) may be used to connect the large end of the cartridge to the calibration system. Refer to ASTM Practice D3686 or D4185, for procedures to calibrate small volume air pumps.

9. Preparation of PUF Sampling Cartridges

9.1 The PUF adsorbent is white and yellows upon exposure to light. The "yellowing" of PUF will not affect its ability to collected pesticides or PCBs.

9.2 For initial cleanup and quality assurance purposes, the PUF plug is placed in a Soxhlet extractor and extracted with acetone for 14 to 24 hours at 4 to 6 cycles per hour.

[Note: If commercially pre-extracted PUF plugs are used, extraction with acetone is not required.]

Follow with a 16-hour Soxhlet extraction with 5% diethyl ether in n-hexane. When cartridges are reused, 5% diethyl ether in n-hexane can be used as the cleanup solvent.

9.3 Place the extracted PUF in a vacuum oven connected to a water aspirator and dry at room temperature for 2 to 4 hours (until no solvent odor is detected). Alternatively, they may be dried at room temperature in an air-tight container with circulating nitrogen (zero grade). Place the clean PUF plug into a labeled glass sampling cartridges using gloves and forceps. Wrap the cartridges with hexane-rinsed aluminum foil and placed in jars fitted with TFE fluorocarbon-lined caps. The foil wrapping may also be marked for identification using a blunt probe.

9.4 Granular sorbents may be combined with PUF to extend the range of use to compounds with saturation vapor pressures greater than 10^{-4} kPa (6). A useful combination trap can be assembled by "sandwiching" 0.6 g of Tenax-TA between two 22-mm I.D. x 3.8-cm pre-cleaned PUF plugs, as shown in Figure 2, Cartridge b. The Tenax-TA should be pre-extracted as described in Section 9.2. This trap may be extracted, vacuum dried, and removed without unloading it.

9.5 Analyze at least one assembled cartridge from each batch as a laboratory blank before the batch is acceptable. A blank level of <10 ng/plug for single component compounds is considered to be acceptable. For multiple component mixtures (e.g., PCBs), the blank level should be <100 ng/plug.

9.6 After cleaning, cartridges are considered clean up to 30 days when stored in sealed containers. Certified clean cartridges do not need to be chilled when shipping to the field.

10. Sampling

[Note: After the sampling system has been assembled and calibrated as per Section 8, it can be used to collect air samples as described below. The prepared sample cartridges should be used within 30 days of certification and should be handled only with latex or precleaned cotton gloves.]

10.1 Carefully remove the clean sample cartridge from the aluminum foil wrapping (the foil is returned to jars for later use) and attached to the pump with flexible tubing. The sampling assembly is positioned with the intake downward or in horizontal position. Locate the sampler in an unobstructed area at least 30 meters from any obstacle to air flow. The PUF or PUF/XAD-2 cartridge intake is positioned 1 to 2 m above ground level. Cartridge height above ground is recorded on the Compendium Method TO-10A field test data sheet (FTDS), as illustrated in Figure 5.

10.2 After the PUF cartridge is correctly inserted and positioned, the power switch is turned on and the sampling begins. The elapsed time meter is activated and the start time is recorded. The pumps are checked during the sampling process and any abnormal conditions discovered are recorded on the FTDS. Ambient temperatures and barometric pressures are measured and recorded periodically during the sampling procedure on the FTDS.

10.3 At the end of the desired sampling period, the power is turned off, the PUF cartridge removed from the sampler and wrapped with the original aluminum foil and placed in a sealed, labeled container for transport, under blue ice (<4°C), back to the laboratory. At least one field blank is returned to the laboratory with each group of

samples. A field blank is treated exactly like a sample except that no air is drawn through the cartridge. Samples are stored at <4°C or below until analyzed in the laboratory. Extraction must occur within 7 days of sampling and analysis within 40 days of extraction. Refer to ASTM D4861-94 (1), Appendix X3 for storage stability for various common pesticides and other compounds on PUF or PUF/Tenax TA sandwich.

11. Sample Extraction Procedure

[Note: Sample extraction should be performed under a properly ventilated hood.]

11.1 Sample Extraction

11.1.1 All samples should be extracted within 1 week after collection. All samples should be stored at <4°C until extracted.

11.1.2 All glassware should be washed with a suitable detergent; rinsed with deionized water, acetone, and hexane; rinsed again with deionized water; and fired in an oven (500°C).

11.1.3 Prepare a spiking solution for determination of extraction efficiency. The spiking solution should contain one or more surrogate compounds that have chemical structures and properties similar to those of the analytes of interest. Octachloronaphthalene (OCN) and dibutylchlorendate have been used as surrogates for determination of organochlorine pesticides by GC with an ECD. Tetrachloro-m-xylene and decachlorobiphenyl can also be used together to insure recovery of early and late eluting compounds. For organophosphate pesticides, tributylphosphate or triphenylphosphate may be employed as surrogates. The surrogate solution should be prepared so that addition of 100 μL into the PUF plug results in an extract containing the surrogate compound at the high end of the instrument's calibration range. As an example, the spiking solution for OCN is prepared by dissolving 10 mg of OCN in 10 mL of 10% acetone in n-hexane, followed by serial dilution n-hexane to achieve a final spiking solution of OCN of 1 μg/mL.

[Note: Use the recoveries of the surrogate compounds to monitor for unusual matrix effects and gross sample processing errors. Evaluate surrogate recovery for acceptance by determining whether the measured concentration falls within the acceptance limits of 60-120 percent.]

11.1.4 The extracting solution (5% diethyl ether/hexane) is prepared by mixing 1900 mL of freshly opened hexane and 100 mL of freshly opened diethyl ether (preserved with ethanol) to a flask.

11.1.5 All clean glassware, forceps, and other equipment to be used should be rinsed with 5% diethyl ether/ hexane and placed on rinsed (5% diethyl ether/hexane) aluminum foil until use. The condensing towers should also be rinsed with 5% diethyl ether/hexane. Then add 300 mL or 5% diethyl ether/hexane to the 500 mL round bottom boiling flask and add up to three boiling granules.

11.1.6 Using precleaned (i.e., 5% diethyl ether/hexane Soxhlet extracted) cotton gloves, the glass PUF cartridges are removed from the sealed container, the PUF removed from the glass container and is placed into the 300 mL Soxhlet extractor using prerinsed forceps.

[Note: If "sandwich" trap is used, carefully clean outside walls of cartridge with hexane-soaked cotton swabs or laboratory tissues (discard) and place cartridge into extractor with intake (large end) downward.]

11.1.7 Before extraction begins, add 100 µL of the OCN solution directly to the top of the PUF plug.

[Note: Incorporating a known concentration of the solution onto the sample provides a quality assurance check to determine recovery efficiency of the extraction and analytical processes.]

11.1.8 Connect the Soxhlet extractor to the 500 mL boiling flask and condenser. Wet the glass joints with 5% diethyl ether/hexane to ensure a tight seal between the fittings. If necessary, the PUF plug can be adjusted using forceps to wedge it midway along the length of the siphon. The above procedure should be followed for all samples, with the inclusion of a blank control sample.

11.1.9 The water flow to the condenser towers of the Soxhlet extraction assembly should be checked and the heating unit turned on. As the samples boil, the Soxhlet extractors should be inspected to ensure that they are filling and siphoning properly (4 to 6 cycles/hour). Samples should cycle for a minimum of 16 hours.

11.1.10 At the end of the extracting process (minimum of 16 hours), the heating unit is turned off and the sample cooled to room temperature.

11.1.11 The extracts are then concentrated to 5 mL using a Kuderna-Danish (K-D) apparatus. The K-D is set up, assembled with concentrator tubes, and rinsed. The lower end of the filter tube is packed with glass wool and filled with sodium sulfate to a depth of 40 mm. The filter tube is then placed in the neck of the K-D. The Soxhlet extractors and boiling flasks are carefully removed from the condenser towers and the remaining solvent is drained into each boiling flask. Sample extract is carefully poured through the filter tube into the K-D. Each boiling flask is rinsed three times by swirling hexane along the sides. Once the sample has drained, the filter tube is rinsed down with hexane. Each Synder column is attached to the K-D and rinsed to wet the joint for a tight seal. The complete K-D apparatus is placed on a steam bath and the sample is evaporated to approximately 5 mL.

[Note: Do not allow samples to evaporate to dryness.]

Remove sample from the steam bath, rinse Synder column with minimum of hexane, and allow to cool. Adjust sample volume to 10 mL in a concentrator tube, close with glass stopper and seal with TFE fluorocarbon tape. Alternatively, the sample may be quantitatively transferred (with concentrator tube rinsing) to prescored vials and brought up to final volume. Concentrated extracts are stored at <4°C until analyzed. Analysis should occur no later than 40 days after sample extraction.

11.2 Sample Cleanup

11.2.1 If polar compounds (from example, organophosphorus and carbamate classes) that interfere with GC/ECD analysis are present, use column chromatographic cleanup or alumina. The sample cleanup will permit the analysis of most organochlorine pesticides or PCBs.

11.2.2 Before cleanup, the sample extract is carefully reduced to 1 mL using a gentle stream of clean nitrogen.

11.2.3 A glass chromatographic column (2-mm I.D. x 15-cm long) is packed with alumina, activity grade IV, and rinsed with approximately 20 mL of n-hexane. The concentrated sample extract is placed on the column and eluted with 10 mL of n-hexane at a rate of 0.5 mL/minute. The eluate volume is adjusted to exactly 10 mL and analyzed as per Section 12.

11.2.4 If both PCBs and organochlorine pesticides are sought, alternate cleanup procedures (5,6) may be required (i.e., silicic acid).

11.2.5 Finally, class separation and improved specificity can be achieved by column clean-up and separation on Florisil (6).

12. Analytical Procedure

12.1 Analysis of Organochlorine Pesticides by Capillary Gas Chromatography with Electron Capture Detector (GC/ECD)

[Note: Organochlorine pesticides, PCBs and many nonchlorinated pesticides are responsive to electron capture detection (see Table 1). Most of these compounds can be analyzed at concentration of 1 to 50 ng/mL by GC/ECD. The following procedure is appropriate. Analytical methods that have been used to determine pesticides and PCBs collected from air by this procedure have been published (12).]

12.1.1 Select GC column (e.g., 0.3-mm by 30-m DB-5 column) and appropriate GC conditions to separate the target analytes. Typical operating parameters for this column with splitless injection are: Carrier gas-chromatography grade helium at a flow rate of 1 to 2 mL/min and a column head pressure of 7 to 9 psi (48 to 60 kPa); injector temperature of 250°C; detector temperature of 350°C; initial oven temperature of 50°C held for 2.0 min., ramped at 15°C/min to 150°C for 8 min, ramped at 10°C/min to 295°C then held for 5 min; purge time of 1.0 min. A typical injection volume is 2 to 3 μL.

12.1.2 Remove sample extract from the refrigerator and allow to warm to room temperature.

12.1.3 Prepare standard solution from reference materials of known purity. Analytically pure standards of organochlorine pesticides and PCBs are available from several commercial sources.

12.1.4 Use the standard solutions of the various compounds of interest to determine relative retention times (RRTs) to an internal standard such as p,p'-DDE, aldrin or octachloronaphthalene. Use 1 to 3-μL injections or other appropriate volumes.

12.1.5 Determine detector linearity by injecting standard solutions of three different concentrations (amounts) that bracket the range of analyses. The calibration is considered linear if the relative standard deviation (RSD) of the response factors for the three standards is 20 percent or less.

12.1.6 Calibrate the system with a minimum of three levels of calibration standards in the linear range. The low standard should be near the analytical method detection limit. The calibration is considered linear if the relative standard deviation (RSD) of the response factors for the three standards is 20 percent or less. The initial calibration should be verified by the analysis of a standard from an independent source. Recovery of 85 to 115 percent is acceptable. The initial calibration curve should be verified at the begining of each day and after every ten samples by the analysis of the mid point standard; an RPD of 15% or less is acceptable for continuing use of the initial calibration curve.

12.1.7 Inject 1 to 3 μL of the sample extract. Record volume injected to the nearest 0.05 μL.

12.1.8 A typical ECD response for a mixture of single component pesticides using a capillary column is illustrated in Figure 6. If the response (peak height or area) exceeds the calibration range, dilute the extract and reanalyze.

12.1.9 Quantify PCB mixtures by comparison of the total heights or areas of GC peaks (minimum of 5) with the corresponding peaks in the best-matching standard. Use Aroclor 1242 for early-eluting PCBs and either Aroclor 1254 or Aroclor 1260 as appropriate for late-eluting PCBs.

12.1.10 If both PCBs and organochlorine pesticides are present in the same sample, use column chromatographic separation on silicic acid (5,6) prior to GC analysis.

12.1.11 If polar compounds are present that interfere with GC/ECD analysis, use column chromatographic cleanup or alumina, activity grade IV, in accordance with Section 11.2.

12.1.12 For confirmation use a second GC column such as DB-608. All GC procedures except GC/MS require second column confirmation.

12.1.13 For improved resolution use a capillary column such as an 0.25-mm I.D. x 30-m DB-5 with 0.25 μm film thickness. The following conditions are appropriate.

- Helium carrier gas at 1 mL/min.
- Column temperature program, 90°C (4 min)/16°C/min to 154°C/4°C/min to 270°C.
- Detector, ^{63}Ni ECD at 350°C.
- Make up gas, nitrogen, or 5% methane/95% argon at 60 mL/min.
- Splitless injection, 2 μL maximum.
- Injector temperature, 220°C.

12.1.14 Class separation and improved specificity can be achieved by column chromatographic separation on Florisil (6).

12.2 Analysis of Organophosphorus Pesticides by Capillary Gas Chromatography with Flame Photometric or Nitrogen-Phosphorus Detectors (GC/FPD/NPD)

[Note: Organophosphorus pesticides are responsive to flame photometric and nitrogen-phosphorus (alkali flame ionization) detection. Most of these compounds can be analyzed at concentrations of 50 to 500 ng/mL using either of these detectors.]

12.2.1 Procedures given in Section 12.1.1 through 12.1.9 and Section 12.1.13 through 12.1.14 apply, except for the selection of surrogates.

12.2.2 Use tributylphosphate, triphenylphosphate, or other suitable compound(s) as surrogates to verify extraction efficiency and to determine RRTs.

12.3 Analysis of Carbamate and Urea Pesticides by Capillary Gas Chromatography with Nitrogen-Phosphorus Detector

12.3.1 Trazine, carbamate, and urea pesticides may be determined by capillary GC (DB-5, DB-17, or DB-1701 stationary phase) using nitrogen-phosphorus detection or MS-SIM with detection limits in the 0.05 to 0.2 μL/mL range. Procedures given in Section 12.1.1 through 12.1.9 and Section 12.1.13 through 12.1.14 apply, except for the selection of surrogates, detector, and make up gas.

12.3.2 Thermal degradation may be minimized by reducing the injector temperature to 200°C. HPLC may also be used, but detection limits will be higher (1 to 5 μg/mL).

12.3.3 N-methyl carbamates may be determined using reverse-phase high performance liquid chromatography (HPLC) (C-18) (Section 12.4) and post-column derivatization with o-phthaldehyde and fluorescence detection (EPA Method 531). Detection limits of 0.01 to 0.1 μg/mL can be achieved.

12.4 Analysis of Carbamate, Urea, Pyrethroid, and Phenolic Pesticides by High Performance Liquid Chromatography (HPLC)

[Note: Many carbamate pesticides, urea pesticides, pyrethrins, phenols, and other polar pesticides may be analyzed by high HPLC with fixed or variable wavelength UV detection. Either reversed-phase or normal phase chromatography may be used. Detection limits are 0.2 to 10 μg/mL of extract.]

12.4.1 Select HPLC column (i.e., Zorbax-SIL, 46-mm I.D. x 25-cm, or μ-Bondapak C18, 3.9-mm x 30-cm, or equivalent).

12.4.2 Select solvent system (i.e., mixtures of methanol or acetonitrile with water or mixtures of heptane or hexane with isopropanol).

12.4.3 Follow analytical procedures given in Sections 12.1.2 through 12.1.9.

12.4.4 If interferences are present, adjust the HPLC solvent system composition or use column chromatographic clean-up with silica gel, alumina, or Florisil (6).

12.4.5 An electrochemical detector may be used to improve sensitivity for some ureas, carbamates, and phenolics. Much more care is required in using this detector, particularly in removing dissolved oxygen from the mobile phase and sample extracts.

12.4.6 Chlorophenol (di- through penta-) may be analyzed by GC/ECD or GC/MS after derivatization with pentafluorobenzylbromide (EPA Method 604).

12.4.7 Chlorinated phenoxyacetic acid herbicides and pentachlorophenol can be analyzed by GC/ECD or GC/MS after derivatization with diazomethane (EPA Method 515). DB-5 and DB-1701 columns (0.25-mm I.D. x 30-m) at 60 to 300°C/4°C per min have been found to perform well.

12.5 Analysis of Pesticides and PCBs by Gas Chromatography with Mass Spectrometry Detection (GC/MS)

[Note: A mass spectrometer operating in the selected ion monitoring mode is useful for confirmation and identification of pesticides.]

12.5.1 A mass spectrometer operating in the select ion monitoring (SIM) mode can be used as a sensitive detector for multi-residue determination of a wide variety of pesticides. Mass spectrometers are now available that provide detection limits comparable to nitrogen-phosphorus and electron capture detectors.

12.5.2 Most of the pesticides shown in Table 1 have been successfully determined by GC/MS/SIM. Typical GC operating parameters are as described in Section 12.1.1.

12.5.3 The mass spectrometer is typically operated using positive ion electron impact ionization (70 eV). Other instrumental parameters are instrument specific.

12.5.4 p-Terphenyl-d_{14} is commonly used as a surrogate for GC/MS analysis.

12.5.5 Quantification is typically performed using an internal standard method. 1,4-Dichlorobenzene, naphthalene-d_8, acenaphthene-d_{10}, phenanthrene-d_{10}, chrysene-d_{12} and perylene-d_{12} are commonly used as internal standards. Procedures given in Section 12.1.1 through 12.1.9 and Section 12.1.13 through 12.1.14 apply, except for the selection of surrogates, detector, and make up gas.

12.5.6 See ASTM Practice D 3687 for injection technique, determination of relative retention times, and other procedures pertinent to GC and HPLC analyses.

12.6 Sample Concentration

12.6.1 If concentrations are too low to detect by the analytical procedure of choice, the extract may be concentrated to 1 mL or 0.5 mL by carefully controlled evaporation under an inert atmosphere. The following procedure is appropriate.

12.6.2 Place K-D concentrator tube in a water bath and analytical evaporator (nitrogen blow-down) apparatus. The water bath temperature should be from 25°C to 50°C.

12.6.3 Adjust nitrogen flow through hypodermic needle to provide a gentle stream.

12.6.4 Carefully lower hypodermic needle into the concentrator tube to a distance of about 1 cm above the liquid level.

12.6.5 Continue to adjust needle placement as liquid level decreases.

12.6.6 Reduce volume to slightly below desired level.

12.6.7 Adjust to final volume by carefully rinsing needle tip and concentrator tube well with solvent (usually n-hexane).

13. Calculations

13.1 Determination of Concentration

13.1.1 The concentration of the analyte in the extract solution can be taken from a standard curve where peak height or area is plotted linearly against concentration in nanograms per milliliter (ng/mL). If the detector response is known to be linear, a single point is used as a calculation constant.

13.1.2 From the standard curve, determine the nanograms of analyte standard equivalent to the peak height or area for a particular compound.

13.1.3 Ascertain whether the field blank is contaminated. Blank levels should not exceed 10 ng/sample for organochlorine pesticides or 100 ng/sample for PCBs and other pesticides. If the blank has been contaminated, the sampling series must be held suspect.

13.1.4 Quantity of the compound in the sample (A) is calculated using the following equation:

$$A = 1000 \left(\frac{A_s \times V_e}{V_i} \right)$$

where:

A = total amount of analyte in the sample, ng.

A_s = calculated amount of material injected onto the chromatograph based on calibration curve for injected standards, ng.

V_e = final volume of extract, mL.

V_i = volume of extract injected, μL.

1000 = factor for converting microliters to milliliters.

13.1.5 The extraction efficiency (EE) is determined from the recovery of surrogate spike as follows:

$$EE(\%) = \left| \frac{S}{S_a} \right| [100]$$

where:

EE = extraction efficiency, %.

S = amount of spike recovered, ng.

S_a = amount of spike added to plug, ng.

The extraction efficiency (surrogate recovery) must fall between 60-120% to be acceptable.

13.1.6 The total volume of air sampled under ambient conditions is determined using the following equation:

$$V_a = \frac{\sum_{i=1}^{n} (T_i \times F_i)}{1000 \text{ L/m}^3}$$

where:

V_a = total volume of air sampled, m^3.

T_i = length of sampling segment between flow checks, min.

F_i = average flow during sampling segment, L/min.

13.1.7 The air volume is corrected to EPA standard temperature (25°C) and standard pressure (760 mm Hg) as follows:

$$V_s = V_a \left(\frac{P_b - P_w}{760 \text{ mm Hg}} \right) \left(\frac{298K}{t_A} \right)$$

where:

V_s = volume of air at standard conditions (25°C and 760 mm Hg), std. m^3.

V_a = total volume of air sampled, m^3.

P_b = average ambient barometric pressure, mm Hg.

P_w = vapor pressure of water at calibration temperature, mm Hg.

t_A = average ambient temperature, °C + 273.

13.1.8 If the proper criteria for a sample have been met, concentration of the compound in a standard cubic meter of air sampled is calculated as follows:

$$C_a(\text{ng/std. m}^3) = \left[\frac{(A)}{(V_s)} \right] \left[\frac{(100)}{(SE(\%))} \right]$$

where:

SE = sampling efficiency as determined by the procedure outlined in Section 14.

If it is desired to convert the air concentration value to parts per trillion (ppt) in dry air at standard temperature and pressure (STP), the following conversion is used:

$$\text{ppt} = 0.844\ (C_a)$$

The air concentration can be converted to parts per trillion (v/v) in air at STP as follows:

$$\text{pptv} = \left[\frac{(24.45)\ (C_a)}{(MW)} \right]$$

where:

MW = molecular weight of the compound of interest, g/g-mole.

13.1.9 If quantification is performed using an internal standard, a relative response factor (RRF) is calculated by the equation:

$$RRF = \left[\frac{(I_s)(C_{is})}{(I_{is})(C_s)}\right]$$

where:

I_s = integrated area of the target analyte peak, counts.

I_{is} = integrated area of the internal standard peak, counts.

C_{is} = concentration of the internal standard, ng/μL.

C_s = concentration of the analyte, ng/µL.

13.1.10 The concentration of the analyte (C_a) in the sample is then calculated as follows:

$$C_a = \frac{(I_s)(C_{is})}{(RRF)(I_{is})}$$

where:

C_a = concentration of analyte, ng/m^3

I_s = integrated area of the target analyte peak, counts.

RRF = relative response factor (see Section 13.1.10).

14. Sampling and Retention Efficiencies

14.1 General

14.1.1 Before using Compendium Method TO-10A, the user should determine the sampling efficiency for the compound of interest. The sampling efficiencies shown in Tables 2, 3, 4, and 5 were determined for approximately 1 m^3 of air at about 25°C, sampled at 3.8 L/min. The SE values in these tables may be used for similar sampling conditions; for other compounds or conditions, SE values must be determined.

14.1.2 Sampling efficiencies for the pesticides shown in Table 6 are for a flowrate of 3.8 L/min and at 25°C. For compounds not listed, longer sampling times, different flow rates, or other air temperatures, the following procedure may be used to determine sampling efficiencies.

14.2 Determining SE

14.2.1 SE is determined by a modified impinger assembly attached to the sampler pump, as illustrated in Figure 7. A clean PUF is placed in the pre-filter location and the inlet is attached to a nitrogen line.

[Note: Nitrogen should be used instead of air to prevent oxidation of the compounds under test. The oxidation would not necessarily reflect what may be encountered during actual sampling and may give misleading sampling efficiencies.]

Two PUF plugs (22-mm x 7.6-cm) are placed in the primary and secondary traps and are attached to the pump.

14.2.2 A standard solution of the compound of interest is prepared in a volatile solvent (i.e., hexane, pentane, or benzene). A small, accurately measured volume (i.e., 1 mL) of the standard solution is placed into the modified midget impinger. The sampler pump is set at the rate to be used in field application and then activated. Nitrogen is drawn through the assembly for a period of time equal to or exceeding that intended for field application. After the desired sampling test period, the PUF plugs are removed and analyzed separately as per Section 12.

14.2.3 The impinger is rinsed with hexane or another suitable solvent and quantitatively transferred to a volumetric flask or concentrator tube for analysis.

14.2.4 The sampling efficiency (SE) is determined using the following equation:

$$\% \ SE = \frac{W_1}{W_0 - W_r} \times 100$$

where:

W_1 = amount of compound extracted from the primary trap, ng.

W_o = original amount of compound added to the impinger, ng.

W_r = residue left in the impinger at the end of the test, ng.

14.2.5 If material is found in the secondary trap, it is an indication that breakthrough has occurred. The addition of the amount found in the secondary trap, W_2, to W_1, will provide an indication for the overall sampling efficiency of a tandem-trap sampling system. The sum of W_1, W_2 (if any), and W_r must equal (approximately ±10%) W_o or the test is invalid.

14.2.6 If the compound of interest is not sufficiently volatile to vaporize at room temperature, the impinger may be heated in a water bath or other suitable heater to a maximum of 50°C to aid volatilization. If the compound of interest cannot be vaporized at 50°C without thermal degradation, dynamic retention efficiency (RE_d) may be used to estimate sampling efficiency. Dynamic retention efficiency is determined in the manner described in Section 14.2.7. Table 7 lists those organochlorine pesticides which dynamic retention efficiencies have been determined.

14.2.7 A pair of PUF plugs is spiked by slow, dropwise addition of the standard solution to one end of each plug. No more than 0.5 to 1 mL of solution should be used. Amounts added to each plug should be as nearly the same as possible. The plugs are allowed to dry for 2 hours in a clean, protected place (i.e., desiccator). One spiked plug is placed in the primary trap so that the spiked end is at the intake and one clean unspiked plug is placed in the secondary trap. The other spiked plug is wrapped in hexane-rinsed aluminum foil and stored in a clean place for the duration of the test (this is the static control plug, Section 14.2.8). Prefiltered nitrogen or ambient air is drawn through the assembly as per Section 14.2.2.
[Note: Impinger may be discarded.]

Each PUF plug (spiked and static control) is analyzed separately as per Section 12.

14.2.8 This dynamic retention efficiency (% RE_d) is calculated as follows:

$$\% \ RE_d = \frac{W_1}{W_o} \times 100$$

where:

W_1 = amount of compound recovered from primary plug, ng.

W_o = amount of compound added to primary plug, ng.

If a residue, W_2, is found on the secondary plug, breakthrough has occurred. The sum of $W_1 + W_2$ must equal W_o, within 25% or the test is invalid. For most compounds tested by this procedure, % RE_d values are generally less than % SE values determined per Section 14.2. The purpose of the static RE_d determination is to establish any loss or gain of analyte unrelated to the flow of nitrogen or air through the PUF plug.

15. Performance Criteria and Quality Assurance

[Note: This section summarizes required quality assurance (QA) measures and provides guidance concerning performance criteria that should be achieved within each laboratory.]

15.1 Standard Operating Procedures (SOPs)

15.1.1 Users should generate SOPs describing the following activities accomplished in their laboratory: (1) assembly, calibration, and operation of the sampling system, with make and model of equipment used; (2) preparation, purification, storage, and handling of sampling cartridges; (3) assembly, calibration, and operation of the analytical system, with make and model of equipment used; and (4) all aspects of data recording and processing, including lists of computer hardware and software used.

15.1.2 SOPs should provide specific stepwise instructions and should be readily available to, and understood by, the laboratory personnel conducting the work.

15.2 Process, Field, and Solvent Blanks

15.2.1 One PUF cartridge from each batch of approximately twenty should be analyzed, without shipment to the field, for the compounds of interest to serve as a process blank.

15.2.2 During each sampling episode, at least one PUF cartridge should be shipped to the field and returned, without drawing air through the sampler, to serve as a field blank.

15.2.3 Before each sampling episode, one PUF plug from each batch of approximately twenty should be spiked with a known amount of the standard solution. The spiked plug will remain in a sealed container and will not be used during the sampling period. The spiked plug is extracted and analyzed with the other samples. This field spike acts as a quality assurance check to determine matrix spike recoveries and to indicate sample degradation.

15.2.4 During the analysis of each batch of samples, at least one solvent process blank (all steps conducted but no PUF cartridge included) should be carried through the procedure and analyzed.

15.2.5 All blank levels should not exceed 10 ng/sample for single components or 100 ng/sample for multiple component mixtures (i.e., for organochlorine pesticides and PCBs).

15.3 Sampling Efficiency and Spike Recovery

15.3.1 Before using the method for sample analysis, each laboratory must determine its sampling efficiency for the component of interest as per Section 14.

15.3.2 The PUF in the sampler is replaced with a hexane-extracted PUF. The PUF is spiked with a microgram level of compounds of interest by dropwise addition of hexane solutions of the compounds. The solvent is allowed to evaporate.

15.3.3 The sampling system is activated and set at the desired sampling flow rate. The sample flow is monitored for 24 hours.

15.3.4 The PUF cartridge is then removed and analyzed as per Section 12.

15.3.5 A second sampler, unspiked, is collected over the same time period to account for any background levels of components in the ambient air matrix.

15.3.6 In general, analytical recoveries and collection efficiencies of 75% are considered to be acceptable method performance.

15.3.7 Replicate (at least triplicate) determinations of collection efficiency should be made. Relative standard deviations for these replicate determinations of ±15% or less are considered acceptable performance.

15.3.8 Blind spiked samples should be included with sample sets periodically as a check on analytical performance.

15.4 Method Precision and Bias

15.4.1 Precision and bias in this type of analytical procedure are dependent upon the precision and bias of the analytical procedure for each compound of concern, and the precision and bias of the sampling process.

15.4.2 Several different parameters involved in both the sampling and analysis steps of this method collectively determine the precision and bias with which each compound is detected. As the volume of air sampled is increased, the sensitivity of detection increases proportionately within limits set by: (a) the retention efficiency for each specific component trapped on the polyurethane foam plug, and (b) the background interference associated with the analysis of each specific component at a given site sampled. The sensitivity of detection of samples recovered by extraction depends on: (a) the inherent response of the particular GC detector used in the determinative step, and (b) the extent to which the sample is concentrated for analysis. It is the responsibility of the analyst(s) performing the sampling and analysis steps to adjust parameters so that the required detection limits can be obtained.

15.4.3 The reproducibility of this method for most compounds for which it has been evaluated has been determined to range from ±5 to ±30% (measured as the relative standard deviation) when replicate sampling cartridges are used (N>5). Sample recoveries for individual compounds generally fall within the range of 90 to 110%, but recoveries ranging from 65 to 125% are considered acceptable. PUF alone may give lower recoveries for more volatile compounds (i.e., those with saturation vapor pressures $>10^{-3}$ mm Hg). In those cases, another sorbent or a combination of PUF and Tenax TA (see Figure 2) should be employed.

15.5 Method Safety

15.5.1 This procedure may involve hazardous materials, operations, and equipment. This method does not purport to address all of the safety problems associated with its use.

15.5.2 It is the user's responsibility to consult and establish appropriate safety and health practices and determine the applicability of regulatory limitations prior to the implementation of this procedure. This should be part of the user's SOP manual.

16. References

1. "Standard Practice for Sampling and Analysis of Pesticides and Polychlorinated Biphenyls in Air," *Annual Book of ASTM Standards*, Method D4861-94, ASTM, Philadelphia, PA.

2. Lewis, R., and MacLeod, K., "Portable Sampler for Pesticides and Semi-volatile Industrial Organic Chemicals in Air," *Analytical Chemistry*, Vol. 54, 1982, pp. 310-315.

3. Whitmore R.W., Immerman, F.W., Camann, D.E., Bond, A.E., Lewis, R.G., and Schaum, J.L., "Non-occupational Exposure to Pesticides for Residents of Two U.S. Cities," *Arch. Environ. Contam. Toxicol.*, 26, 47-59 (1994).

4. Lewis, R., and Brown, A., and Jackson, M., "Evaluation of Polyurethane Foam for Sampling of Pesticides, Polychlorinated Biphenyls and Polychlorinated Napththalenes in Ambient Air," *Analytical Chemistry*, Vol. 49, 1977, pp. 1668-1672.

5. Armour, J., and Burke, J., "Method for Separating Polychlorinated Biphenyls from DDT and Its Analogs," *Journal of the Association of Official Analytical Chemists*, Vol. 53, No. 4, 1970, pp. 761-768.

6. *Manual of Analytical Methods for the Analysis of Pesticides in Human and Environmental Samples*, U. S. Environmental Protection Agency, Research Triangle Park, NC 27711, Report No. EPA-600/8-80-038, June 1980 (NTIS No. PB82-208752).

7. Kogan, V., Kuhlman, M., Coutant, R., and Lewis, R., "Aerosol Filtration in Sorbent Beds," *Journal of the Air and Waste Management Association*, Vol. 43, 1993, p. 1367-1373.

8. Lewis, R., and Lee, R., "Air Pollution from Pesticide Sources, Occurrences and Dispersion," In: *Air Pollution from Pesticides and Agricultural Processes*, Lee, R., Editor, CRC Press, Boca Raton, FL, 1976, pp. 51-94.

9. Lewis, R., "Problem Associated with Sampling for Semi-volatile Organic Chemicals in Air," *Proceedings of the 1986 EPA/APCA Symposium on Measurement of Toxic Air Pollutants*, Air and Waste Management Association, Pittsburgh, PA, 1986, pp. 134-145.

10. Camann, D., Harding, J., and Lewis, R., "Trapping of Particle-Associated Pesticides in Indoor Air by Polyurethane Foam and Evaporation of Soil Track-In as a Pesticide Source," In: *Indoor Air* '90, Vol. 2, Walkinshaw, D., editor, Canada Mortgage and Housing Corp., Ottawa, 1990, pp. 621-626.

11. Marple, V., Rubow, K., Turner, W., and Spengler, J., "Low Flow Rate Sharp Cut Impactors for Indoor Air Sampling Design and Calibration," *Journal of the Air Pollution Control Association*. Vol. 37, 1987, pp. 1303-1307.

12. Hsu, J., Wheeler, H., Camann, D., Shatterberg, H., Lewis, R., and Bond, A., "Analytical Methods for Detection of Nonoccupational Exposure to Pesticides," *Journal of Chromatographic Science*, Vol. 26, 1988, pp. 181-189.

TABLE 1. COMPOUNDS FOR WHICH PROCEDURE HAS BEEN TESTED[1]

Compound	Recommended Analysis[2]	Compound	Recommended Analyses
Alachlor	GC/ECD	Heptachlor	GC/ECD
Aldrin	GC/ECD	Heptachlor epoxide	GC/ECD
Allethrin	HPLC/UV	Hexachlorobenzene	GC/ECD
Aroclor 1242	GC/ECD	Hexachlorocyclopentadiene[3,4]	GC/ECD
Aroclor 1254	GC/ECD	Lindane (γ-BHC)	GC/ECD
Aroclor 1260	GC/ECD	Linuron	HPLC/UV
Atrazine	GC/NPD	Malathion	GC/NPD or FPD
Bendiocarb	HPLC/UV	Methyl parathion	GC/NPD or FPD
BHC (α- and β-Hexachlorocyclohexanes)	GC/ECD	Methoxychlor	GC/FCD
Captan	GC/ECD	Metolachlor	GC/ECD
Carbaryl	HPLC/UV	Mexacarbate	GC/FCD
Carbofuran	HPLC/UV	Mirex	GC/ECD
Chlordane, technical	GC/ECD	Monuron	HPLC/UV
Chlorothalonil	GC/ECD	Trans-nonachlor	GC/ECD
Chlorotoluron	HPLC/UV	Oxychlordane	GC/ECD
Chlorpyritos	GC/ECD	Pentachlorobenzene	GC/ECD
2,4-D esters and salts	GC/ECD	Pentachlophenol	GC/ECD
Dacthal	GC/ECD	Permethrin (cis and trans)	HPLC/UV
ρ,ρ-'DDT	GC/ECD	o-Phenylphenol	HPLC/UV
ρ,ρ-'DDE	GC/ECD	Phorate	GC/NPD or FPD
Diazinon	GC/NPD or FPD	Propazine	GC/NPD
Dicloran	GC/ECD	Propoxur (Baygon)	HPLC/UV
Dieldrin	GC/ECD	Pyrethrin	HPLC/UV
Dichlorovos (DDVP)	GC/ECD	Resmethrin	HPLC/UV
Dicofol	GC/ECD	Ronnel	GC/ECD
Dicrotophos	HPLC/UV	Simazine	HPLC/UV
Diuron	HPLC/UV	Terbuthiuron	HPLC/UV
Ethyl parathion	GC/NPD or FPD	1,2,3,4-tetrachlorobenzene[3]	GC/ECD
Fenvalerate	HPLC/UV	1,2,3-trichlorobenzene[3]	GC/ECD
Fluometuron	HPLC/UV	2,3,5-trichlorophenol	GC/ECD
Folpet	GC/ECD	Trifluralin	GC/ECD

[1]The following recommendations are specific for that analyte for maximum sensitivity.
[2]GC = gas chromatography; ECD = electron capture detector, FPD = flame photometric detector; HPLC = high performance liquid chromatography; NPD = nitrogen-phosphorus detector; UV = ultraviolet absorption detector, (GC/MS (gas chromatography/mass spectrometry) may also be used).
[3]Using PUF/Tenax-TA "sandwich" trap.
[4]Compound is very unstable in solution.

TABLE 2. SAMPLING EFFICIENCIES FOR SOME ORGANOCHLORINE PESTICIDES

Compound	Quantity Introduced, μg[2]	Air Volume, m^3	Sampling efficiency, %		
			mean	RSD	n
α-Hexachlorocyclohexane (α-BHC)	0.005	0.9	115	8	6
γ-Hexachlorocyclohexane (Lindane)	0.05-1.0	0.9	91.5	8	5
Chlordane, technical	0.2	0.9	84.0	11	8
p,p'-DDT	0.6, 1.2	0.9	97.5	21	12
p,p'-DDE	0.2, 0.4	0.9	102	11	12
Mirex	0.6, 1.2	0.9	85.9	22	7
2,4-D Esters:					
Isopropyl	0.5	3.6	92.0	5	12
Butyl	0.5	3.6	82.0	10	11
Isobutyl	0.5	3.6	79.0	20	12
Isoctyl	0.5	3.6	>80[2]	--	--

[1]Air volume = 0.9 m^3.
[2]Not vaporized. Value base on %RE = 81.0 (RSD = 10%, n = 6).

TABLE 3. SAMPLING EFFICIENCIES FOR ORGANOPHOSPHORUS PESTICIDES

Compound	Quantity Introduced, μg[2]	Sampling efficiency, %		
		mean	RSD	n
Dichlorvos (DDVP)	0.2	72.0	13	2
Ronnel	0.2	106	8	12
Chlorpyrifos	0.2	108	9	12
Diazinon[1]	1.0	84.0	18	18
Methyl parathion[1]	0.6	80.0	19	18
Ethyl parathion[1]	0.3	75.9	15	18
Malathion[1]	0.3	100[3]	--	--

[1]Analyzed by gas chromatography with nitrogen phosphorus detector or flame photometric detector.
[2]Air volume = 0.9 m^3.
[3]Decomposed in generator; value based on %RE = 101 (RDS = 7, n = 4).

TABLE 4. SAMPLING EFFICIENCIES FOR SOME SEMI-VOLATILE ORGANOCHLORINE COMPOUNDS AND PCBs

Compound	Quantity Introduced, μg[1]	Sampling efficiency, %		
		mean	RSD	n
1,2,3-Trichlorobenzene	1.0	6.6[2]	22	8
1,2,3,4-Tetrachlorobenzene	1.0	62.3[2]	33	5
Pentachlorobenzene	1.0	94.0	12	5
Hexachlorobenzene	0.5, 1.0	94.5	8	5
Hexachlorocyclopentadiene	1.0	8.3[2]	12	5
2,4,5-Trichlorophenol	1.0	108	3	5
Pentachlorophenol	1.0	107	16	5
Aroclor 1242	0.1	96.0	15	6
Aroclor 1254	0.1	95.0	7	6
Aroclor 1260	0.1	109	5	11

[1]Air volume = 0.9 m^3.
[2]% SEs were 98, and 97% (n = 2), respectively, for these three compounds by the PUF/Tenax® TA "sandwich" trap.

TABLE 5. SAMPLING EFFICIENCIES FOR CARBAMATES, UREAS, TRIAZINES, AND PYRETHRINS

Compound	Spike Level, µg/plug	Static Recovery, %		n	Retention Efficiency, %		n	Sampling Efficiency, %		n
		mean	RSDP		mean	RSD		mean	RSD	
Carbamates:										
Propoxur	5	61.4	10	6	77.6	37	6	96.7	11	6
Carbofuran	15	55.3	12	6	64.2	46	6	87.2	14	6
Bendicarb	50	57.3	11	6	69.8	43	6	62.1	14	6
Mexacarbate	10	62.8	19	6	62.7	41	6	89.8	14	6
Carbaryl	100	56.6	14	6	63.6	53	6	0	13	6
Ureas:										
Monuron	19	87.0	6	6	91.2	6	5	0		
Diuron	20	84.1	8	6	90.0	2	5	0		
Linuron	20	86.7	8	6	92.5	4	5	0		
Terbuthiuron	18	85.0	8	6	88.8	8	5	0		
Fluometuron	20	91.4	10	6	101	3	5	0		
Chlortoluron	20	86.2	11	6	92.0	7	5	0		
Triazines:										
Simazine	10	103	6	5	101	9	6	0		
Atrazine	10	104	7	5	98.9	7	6	0		
Propazine	10	105	11	5	99.9	14	6	0		
Pyrethrins:										
Pyrethrin I	(9.7)	90.5	10	6	95.6	22	5	0		
Pyrethrin II	(6.1)	88.6	11	6	69.9	29	5	0		
Allethrin	25	69.2	9	5	58.3	12	6	0		
d-trans-Allethrin	25	76.8	9	6	74.4	9	5	0		
Dicrotophos	25	72.0	22	6	71.7	8	5	0		
Resmethrin	25	76.5	14	6	66.7	14	6	0		
Fenvalerate	25	87.9	3	6	57.2	20	3	0		

TABLE 6. EXTRACTION AND 24-H SAMPLING EFFICIENCIES FOR VARIOUS PESTICIDES AND RELATED COMPOUNDS

Compound	Extraction Efficiency[1], %		Sampling Eficiency[2], %, at					
			10 ng/m^3		100 ng/m^3		1,000 ng/m^3	
	mean	RSD	mean	RSD	mean	RSD	mean	RSD
Chlropyrifos	83.3	11.5	83.7	18.0	92.7	15.1	83.7	18.0
Pentachlorophenol	84.0	22.6	66.7	42.2	52.3	36.2	66.7	42.2
Chlordane	95.0	7.1	96.0	1.4	74.0	8.5	96.0	1.4
o-Phenylphenol	47.0	46.7	46.0	19.1	45.3	29.9	46.0	19.1
Lindane	96.0	6.9	91.7	11.6	93.0	2.6	91.7	11.6
DDVP	88.3	20.2	51.0	53.7	106.0	1.4	51.0	53.7
2,4-D Methyl Ester	--	--	75.3	6.8	58.0	23.6	75.3	6.8
Heptachlor	99.0	1.7	97.3	13.6	103.0	17.3	97.3	13.6
Aldrin	97.7	4.0	90.7	5.5	94.0	2.6	90.7	5.5
Dieldrin	95.0	7.0	82.7	7.6	85.0	11.5	82.7	7.6
Ronnel	80.3	19.5	74.7	12.1	60.7	15.5	74.7	12.2
Diazinon	72.0	21.8	63.7	18.9	41.3	26.6	63.7	19.9
trans-Nonachlor	97.7	4.0	96.7	4.2	101.7	15.3	96.7	4.2
Oxychlorodane	100.0	0.0	95.3	9.5	94.3	1.2	95.3	9.5
α-BHC	98.0	3.5	86.7	13.7	97.0	18.2	86.7	13.7
Bendiocarb	81.3	8.4	59.7	16.9	30.7	23.5	59.7	16.9
Chlorothalonil	90.3	8.4	76.7	6.1	70.3	6.5	76.7	6.1
Heptachlor Epoxide	100.0	0.0	95.3	5.5	97.7	14.2	95.3	5.5
Dacthal	--	--	87.0	9.5	95.3	22.2	87.0	9.5
Aroclor 1242	91.7	14.4	95.0	15.5	94.7	17.5	95.0	15.5

[1]Mean values for one spike at 550 ng/plug and two spikes at 5,500 ng/plug.
[2]Mean values for three determinations.

TABLE 7. EXTRACTION AND 24-H DYNAMIC RETENTION EFFICIENCIES FOR VARIOUS PESTICIDES AND RELATED COMPOUNDS

Compound	Extraction Efficiency[1], %		Sampling Eficiency[2], %, at					
			10 ng/m^3		100 ng/m^3		1,000 ng/m^3	
	mean	RSD	mean	RSD	mean	RSD	mean	RSD
Propoxur	77.5	71.4	92.0	--	91.7	22.8	101.0	18.4
Resmethrin	95.5	71.4	79.0	--	100.7	13.1	107.0	4.4
Dicofol	57.0	8.5	38.0	25.9	65.0	8.7	69.0	--
Captan	73.0	12.7	56.0	--	45.5	64.3	84.3	16.3
Carbaryl	74.0	82.0	102.0	--	61.0	--	113.0	6.1
Malathion	76.5	44.5	108.0	--	54.0	16.0	77.3	7.6
cis-Permethrin	88.7	10.3	101.0	28.5	85.0	26.9	89.0	11.3
trans-Permethrin	88.7	11.0	67.3	34.8	80.7	56.4	108.3	9.5
Methoxychlor	65.5	4.9	--	--	--	--	78.5	2.1
Atrazine	75.0	50.5	--	--	73.0	30.1	83.0	9.5
Folpet	86.7	11.7	--	--	78.0	--	93.0	--
Aroclor 1260	92.0	14.5	88.0	9.6	85.3	9.9	107.1	13.6

[1]Mean values for one spike at 550 ng/plug and two spikes at 5,500 ng/plug.
[2]Mean values for three determinations.

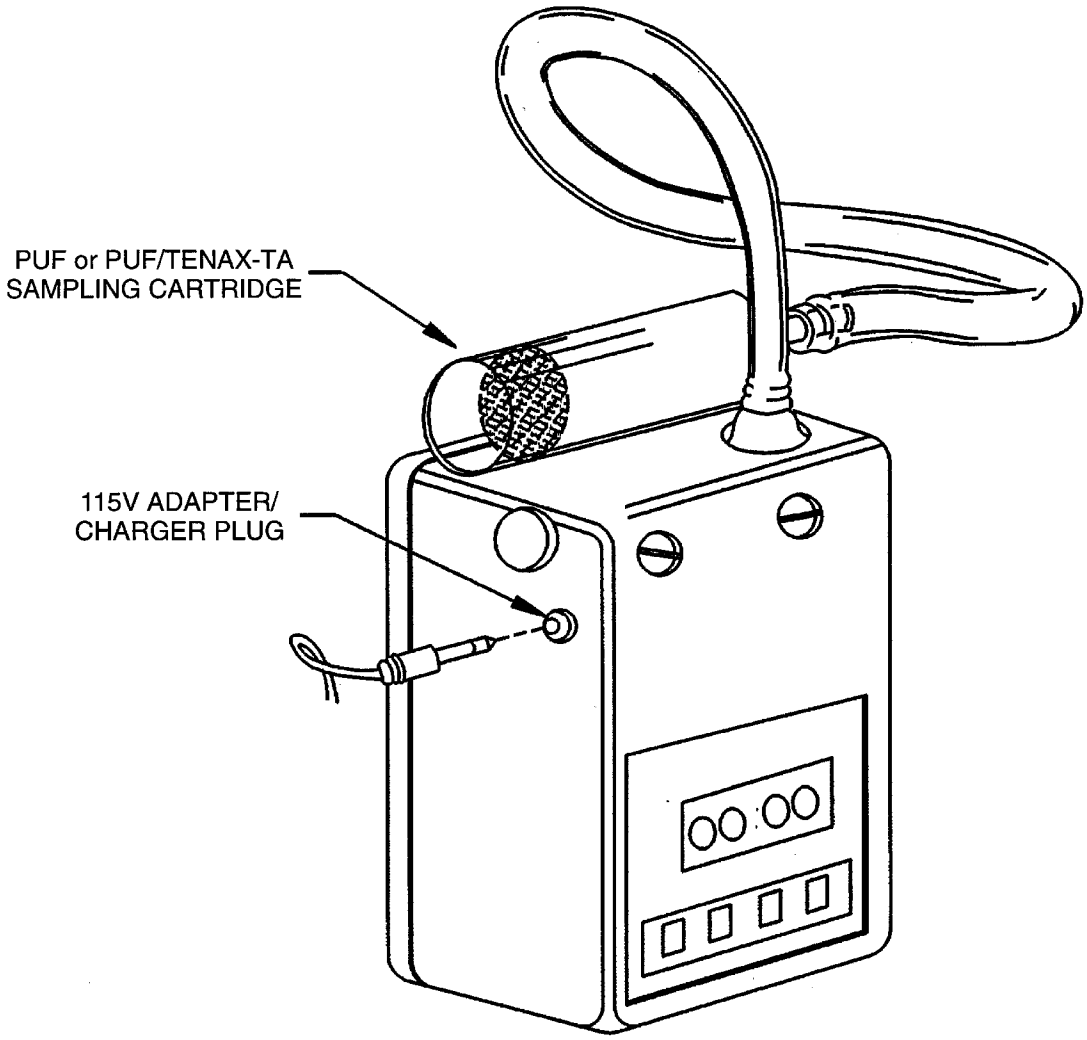

Figure 1. Low volume air sampler.

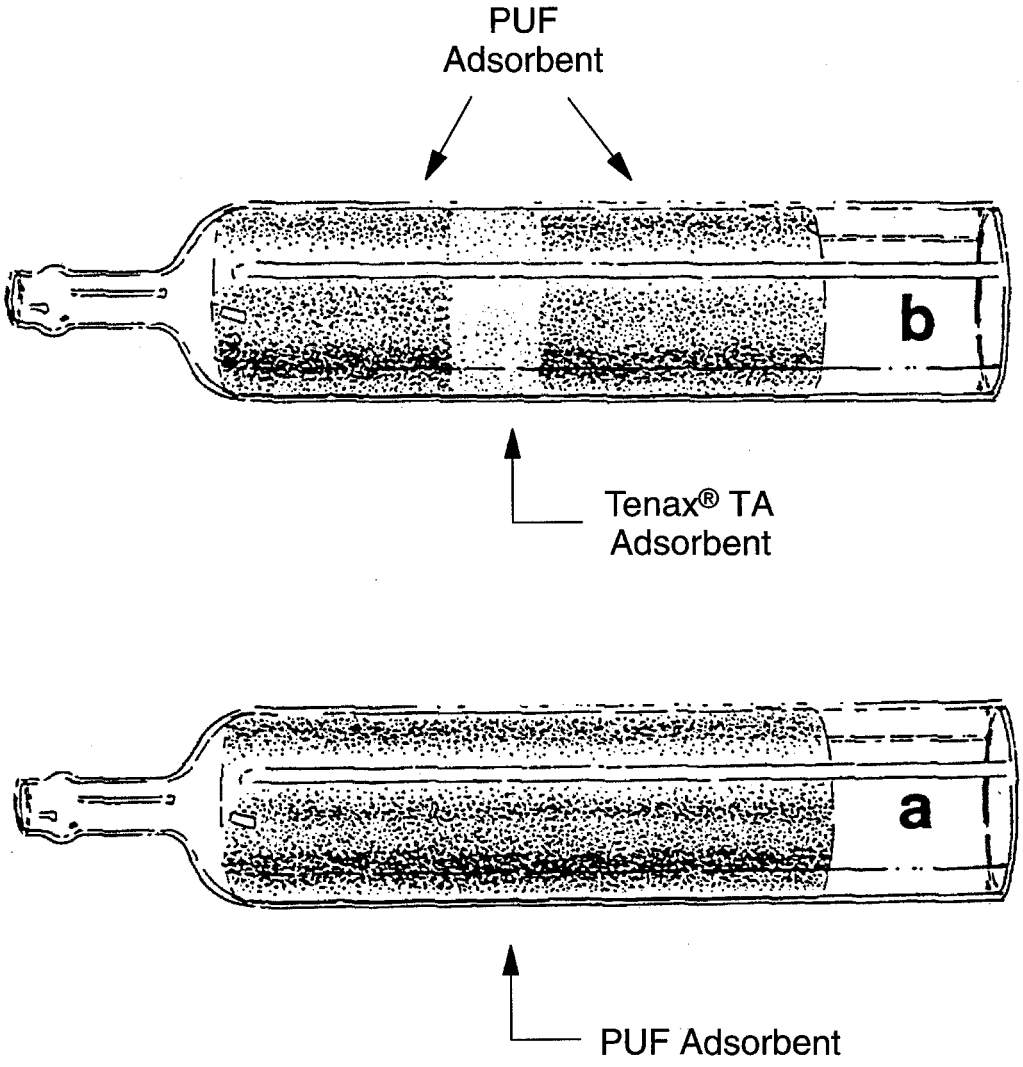

Figure 2. Polyurethane foam (PUF) sampling cartridge (a) and PUF-Tenax® TA "sandwich" sampling cartridge (b).

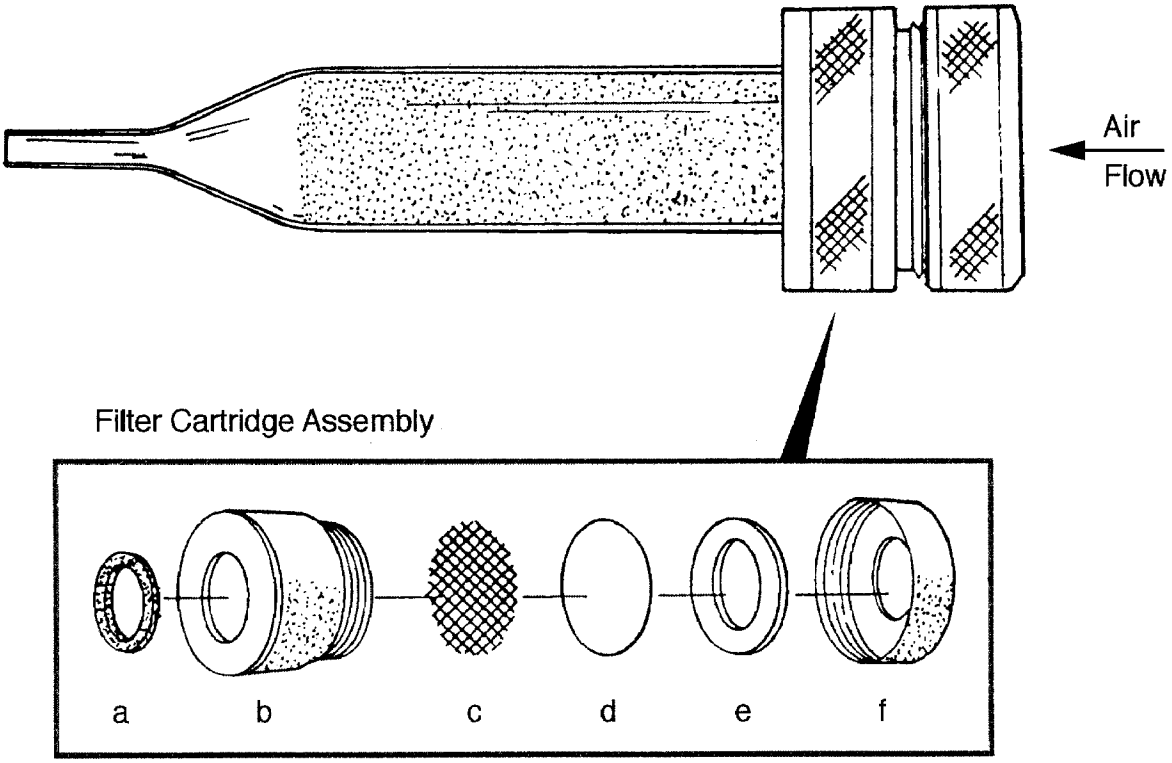

Figure 3. Open-face filter assembly attached to a PUF cartridge:
(a) Inner Viton® o-ring, (b) filter cartridge, (c) stainless steel screen, (d) quartz filter,
(e) filter ring, and (f) cartridge screw cap.

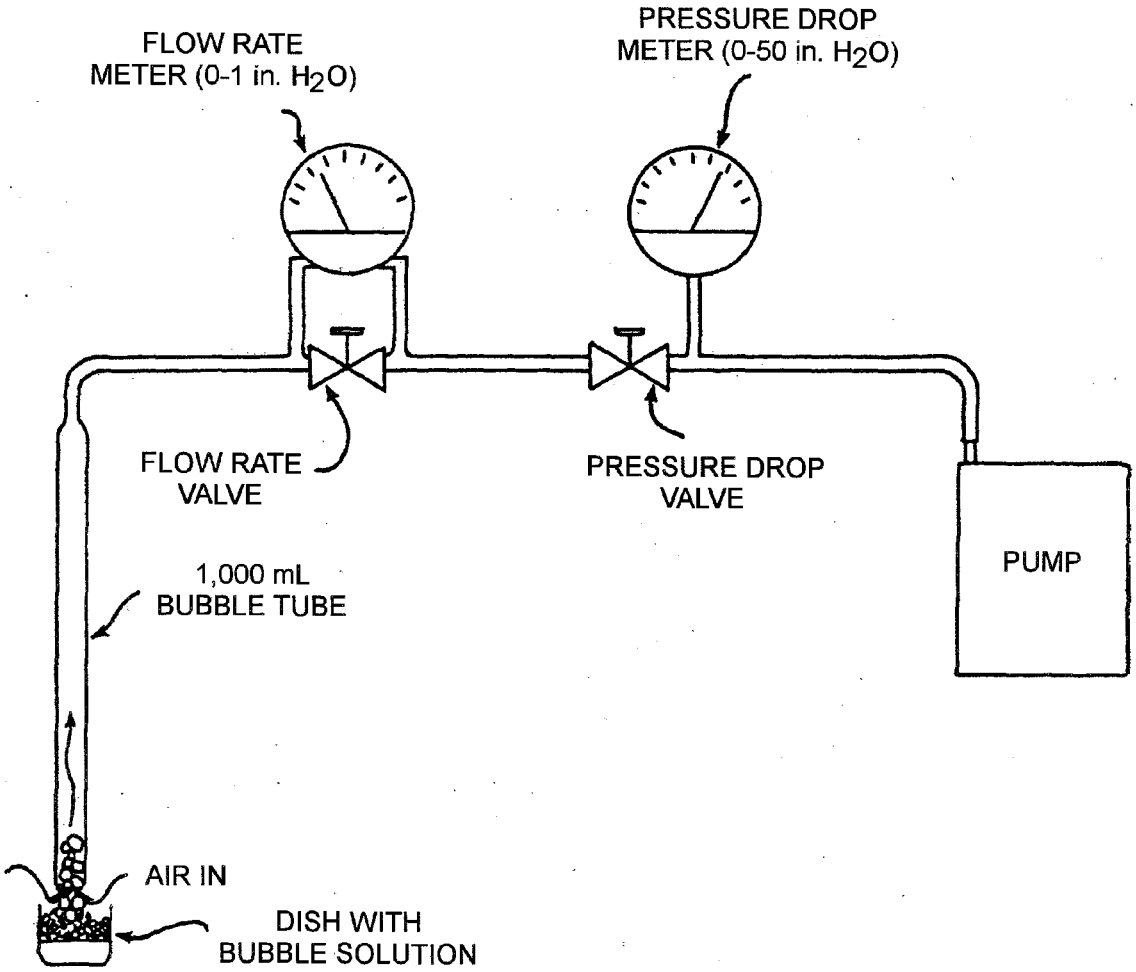

Figure 4. Calibration assembly for air sampler pump.

COMPENDIUM METHOD TO-10A
FIELD TEST DATA SHEET (FTDS)

I. GENERAL INFORMATION

PROJECT:_____ DATE(S) SAMPLED:_____
SITE:_____ TIME PERIOD SAMPLED:_____
LOCATION:_____ OPERATOR:_____
INSTRUMENT MODEL NO.:_____ CALIBRATED BY:_____
PUMP SERIAL NO.:_____ RAIN: ____YES _____NO

ADSORBENT CARTRIDGE INFORMATION:

	Cartridge 1	Cartridge 2	Cartridge 3	Cartridge 4
Type:	_____	_____	_____	_____
Adsorbent:	_____	_____	_____	_____
Serial No.:	_____	_____	_____	_____
Sample No.:	_____	_____	_____	_____

II. SAMPLING DATA

Cartridge Identifi-cation	Sampling Location	Ambient Temp., °F	Ambient Pressure, in Hg	Flow Rate (Q), mL/min		Sampling Period		Total Sampling Time, min.	Total Sample Volume, L
				Cartridge 1	Cartridge 2	Start	Stop		

III. FIELD AUDIT

	Cartridge 1	Cartridge 2	Cartridge 3	Cartridge 4
Audit Flow Check Within 10% of Set Point (Y/N)?	___ pre- _____ post-	_____ pre- _____ post-	_____ pre- _____ post-	_____ pre- _____ post-

CHECKED BY:_____

DATE:_____

Figure 5. Compendium Method TO-10A field test data sheet.

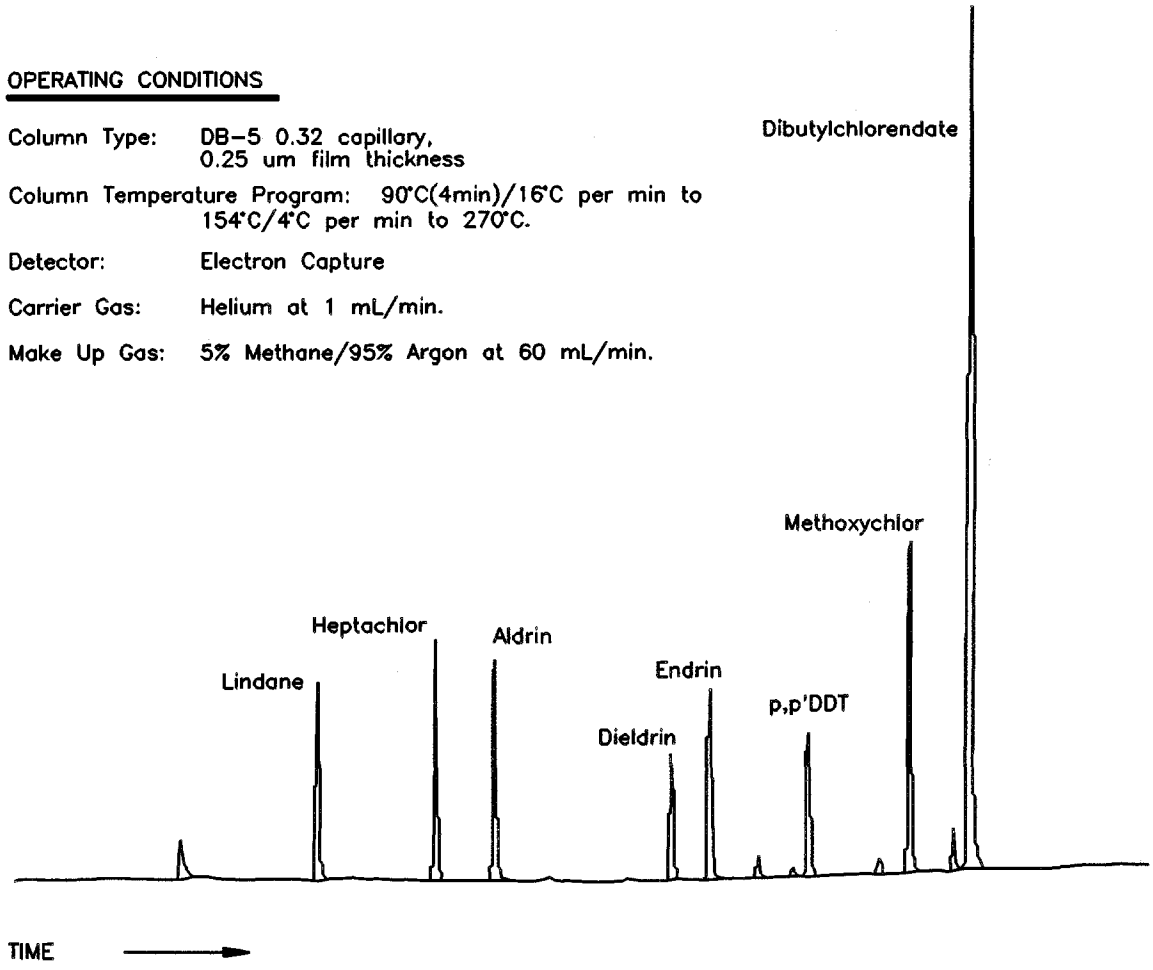

Figure 6. Chromatogram showing a mixture of single component pesticides determined by GC/ECD using a capillary column.

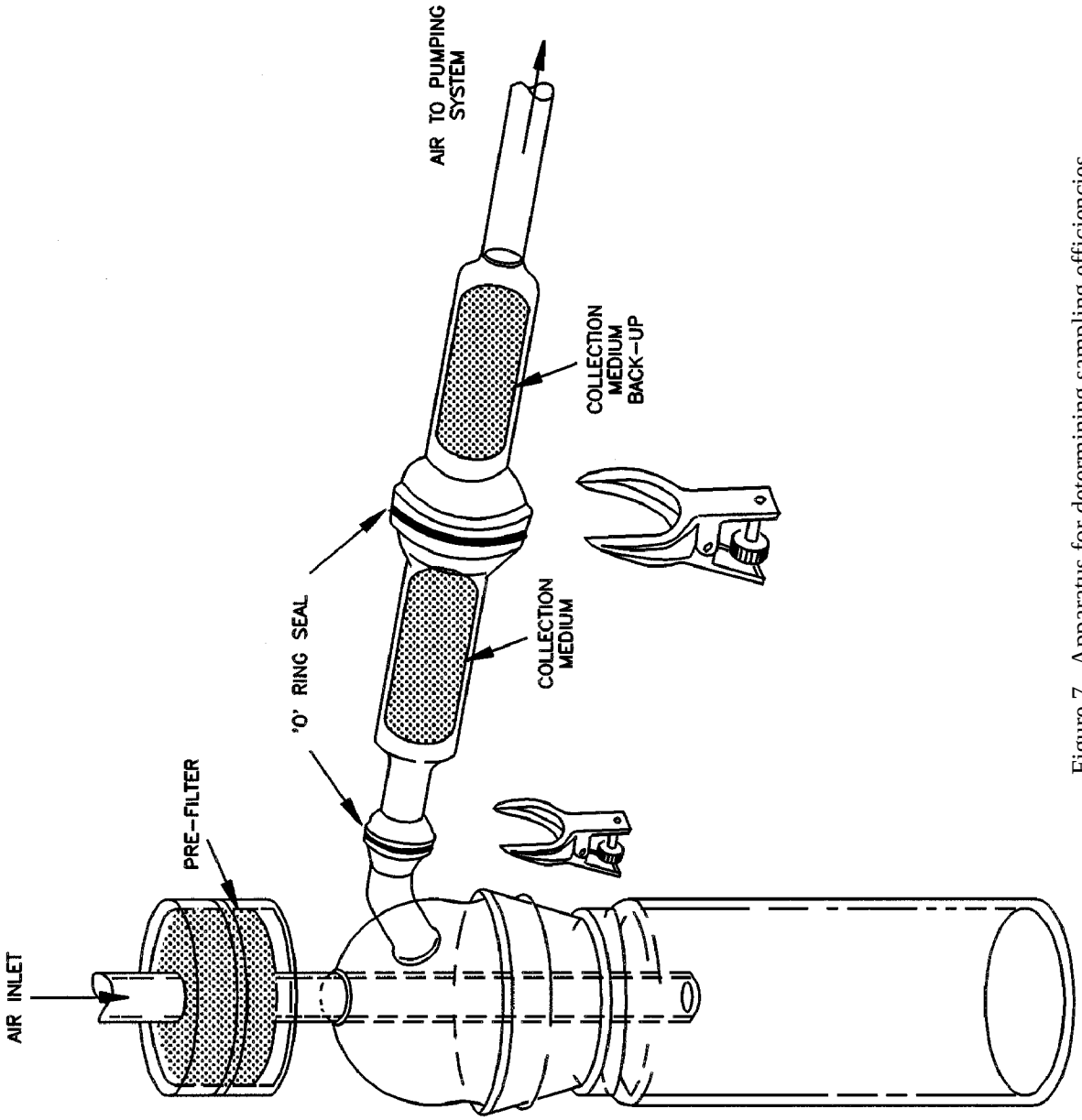

Figure 7. Apparatus for determining sampling efficiencies.

EPA/625/R-96/010b

Compendium of Methods for the Determination of Toxic Organic Compounds in Ambient Air

Second Edition

Compendium Method TO-11A

Determination of Formaldehyde in Ambient Air Using Adsorbent Cartridge Followed by High Performance Liquid Chromatography (HPLC)
[Active Sampling Methodology]

Center for Environmental Research Information
Office of Research and Development
U.S. Environmental Protection Agency
Cincinnati, OH 45268

January 1999

Method TO-11A
Acknowledgements

This Method was prepared for publication in the *Compendium of Methods for the Determination of Toxic Organic Compounds in Ambient Air, Second Edition* (EPA/625/R-96/010b), which was prepared under Contract No. 68-C3-0315, WA No. 3-10, by Midwest Research Institute (MRI), as a subcontractor to Eastern Research Group, Inc. (ERG), and under the sponsorship of the U.S. Environmental Protection Agency (EPA). Justice A. Manning, John O. Burckle, and Scott Hedges, Center for Environmental Research Information (CERI), and Frank F. McElroy, National Exposure Research Laboratory (NERL), all in the EPA Office of Research and Development, were responsible for overseeing the preparation of this method. Additional support was provided by other members of the Compendia Workgroup, which include:

- John O. Burckle, U.S. EPA, ORD, Cincinnati, OH
- James L. Cheney, Corps of Engineers, Omaha, NB
- Michael Davis, U.S. EPA, Region 7, KC, KS
- Joseph B. Elkins Jr., U.S. EPA, OAQPS, RTP, NC
- Robert G. Lewis, U.S. EPA, NERL, RTP, NC
- Justice A. Manning, U.S. EPA, ORD, Cincinnati, OH
- William A. McClenny, U.S. EPA, NERL, RTP, NC
- Frank F. McElroy, U.S. EPA, NERL, RTP, NC
- Heidi Schultz, ERG, Lexington, MA
- William T. "Jerry" Winberry, Jr., EnviroTech Solutions, Cary, NC

Method TO-11 was originally published in March of 1989 as one of a series of peer reviewed methods in the second supplement to *"Compendium of Methods for the Determination of Toxic Organic Compounds in Ambient Air,"* EPA 600/4-89-018. In an effort to keep these methods consistent with current technology, Method TO-11 has been revised and updated as Method TO-11A in this Compendium to incorporate new or improved sampling and analytical technologies.

This Method is the result of the efforts of many individuals. Gratitude goes to each person involved in the preparation and review of this methodology.

Author(s)

- William T. "Jerry" Winberry, Jr., EnviroTech Solutions, Cary, NC
- Silvestre Tejada, U.S. EPA, NERL, RTP, NC
- Bill Lonneman, U.S. EPA, NERL, RTP, NC
- Ted Kleindienst, ManTech, RTP, NC

Peer Reviewers

- Robert G. Lewis, U.S. EPA, NERL, RTP, NC
- Sucha S. Parmar, Atmospheric Analysis and Consulting, Ventura, CA
- Joette Steger, Eastern Research Group, Morrisville, NC
- Lauren Drees, U.S. EPA, NRMRL, Cincinnati, OH

Finally, recognition is given to Frances Beyer, Lynn Kaufman, Debbie Bond, Cathy Whitaker, and Kathy Johnson of Midwest Research Institute's Administrative Services staff whose dedication and persistence during the development of this manuscript has enabled it's publication.

DISCLAIMER

This Compendium has been subjected to the Agency's peer and administrative review, and it has been approved for publication as an EPA document. Mention of trade names or commercial products does not constitute endorsement or recommendation for use.

Method TO-11A

Determination of Formaldehyde in Ambient Air Using Adsorbent Cartridge Followed by High Performance Liquid Chromatography (HPLC) [Active Sampling Methodology]

TABLE OF CONTENTS

Page

1. Scope 11A-1

2. Applicable Documents 11A-3
   2.1 ASTM Standards 11A-3
   2.2 Other Documents 11A-3
   2.3 Other Documents 11A-3

3. Summary of Method 11A-3

4. Significance 11A-4

5. Definitions 11A-6
   5.1 C18 . . . . . 11A-6
   5.2 HPLC 11A-6
   5.3 Method Detection Limit (MDL) 11A-6
   5.4 Photochemical Reaction 11A-6
   5.5 Photochemical Smog 11A-6
   5.6 ppbv 11A-6
   5.7 ppmv 11A-6
   5.8 Silica Gel 11A-6
   5.9 Denuder 11A-7
   5.10 Certification Blank 11A-7
   5.11 Cartridge Blank 11A-7
   5.12 Scrubber 11A-7

6. Extended Methodology and Common Interferences 11A-7

7. Apparatus 11A-8
   7.1 Isocratic HPLC 11A-8
   7.2 Cartridge sampler. 11A-8
   7.3 Sampling system 11A-9
   7.4 Stopwatch. 11A-10
   7.5 Polypropylene shipping container
      with polyethylene-air bubble padding. 11A-10
   7.6 Thermometer 11A-10
   7.7 Barometer (optional). 11A-10
   7.8 Volumetric flasks. 11A-11
   7.9 Pipets. 11A-11
   7.10 Erlenmeyer flask, 1 L. 11A-11
   7.11 Graduated cylinder, 1 L. 11A-11
   7.12 Syringe, 100-250 μL. 11A-11
   7.13 Sample vials. 11A-11

TABLE OF CONTENTS (continued)

Page

7.14 Melting point apparatus 11A-11
7.15 Rotameters 11A-11
7.16 Calibrated syringes 11A-11
7.17 Soap bubble meter or wet test meter 11A-11
7.18 Mass flow meters and mass flow controllers 11A-11
7.19 Positive displacement 11A-11
7.20 Cartridge drying manifold 11A-11
7.21 Liquid syringes 11A-11
7.22 Syringe rack 11A-11
7.23 Luer® fittings/plugs. 11A-11
7.24 Hot plates, beakers, flasks, measuring and disposable pipets, volumetric flasks, etc. 11A-11
7.25 Culture tubes (20 mm x 125 mm) with polypropylene screw caps 11A-11
7.26 Polyethylene gloves. 11A-11
7.27 Dry test meter. 11A-12
7.28 User-prepared copper tubing for ozone scrubber 11A-12
7.29 Cord heater and Variac. 11A-12
7.30 Fittings. 11A-12

8. Reagents and Materials 11A-12
8.1 2,4-Dinitrophenylhydrazine (DNPH) 11A-12
8.2 DNPH coated cartridges 11A-12
8.3 High purity acetonitrile. 11A-12
8.4 Deionized-distilled water. 11A-12
8.5 Perchloric acid. 11A-12
8.6 Ortho-phosphoric acid. 11A-12
8.7 Formaldehyde. 11A-12
8.8 Aldehydes and ketones, analytical grade, best source. 11A-12
8.9 Carbonyl hydrazone 11A-12
8.10 Ethanol or methanol 11A-13
8.11 Nitrogen 11A-13
8.12 Charcoal 11A-13
8.13 Helium 11A-13
8.14 Potassium Iodide 11A-13

9. Preparation of Reagents and Cartridges 11A-13
9.1 Purity of the Acetonitrile 11A-13
9.2 Purification of 2,4-Dinitrophenylhydrazine (DNPH) 11A-14
9.3 Preparation of DNPH-Formaldehyde Derivative 11A-15
9.4 Preparation of DNPH-Formaldehyde Standards 11A-15
9.5 Preparation of DNPH-Coated Cartridges 11A-15
9.6 Equivalent Formaldehyde Cartridge Concentration 11A-18

10. Sampling Procedure 11A-18

TABLE OF CONTENTS (continued)

Page

11. Sample Analysis 11A-21
    11.1 Sample Preparation 11A-21
    11.2 Sample Extraction 11A-21
    11.3 HPLC Analysis 11A-22
    11.4 HPLC Calibration 11A-23

12. Calculations 11A-24

13. Performance Criteria and Quality Assurance 11A-27
    13.1 Standard Operating Procedures (SOPs). 11A-27
    13.2 HPLC System Performance 11A-27
    13.3 Process Blanks 11A-28
    13.4 Method Precision and Accuracy 11A-28
    13.5 Method Detection Limits 11A-28
    13.6 General QA/QC Requirements 11A-29

14. Detection of Other Aldehydes and Ketones 11A-29
    14.1 Introduction 11A-30
    14.2 Sampling Procedures 11A-30
    14.3 HPLC Analysis 11A-30

15. Precision and Bias 11A-31

16. References 11A-32

METHOD TO-11A

Determination of Formaldehyde in Ambient Air Using Adsorbent Cartridge Followed by High Performance Liquid Chromatography (HPLC) [Active Sampling Methodology]

1. Scope

1.1 This document describes a method for the determination of formaldehyde and other carbonyl compounds (aldehydes and ketones) in ambient air utilizing a coated-solid adsorbent followed by high performance liquid chromatographic detection. Formaldehyde has been found to be a major promoter in the formation of photochemical ozone. In particular, short term exposure to formaldehyde and other specific aldehydes (acetaldehyde, acrolein, crotonaldehyde) is known to cause irritation of the eyes, skin, and mucous membranes of the upper respiratory tract**.**

1.2 Over the last several years, numerous methods have been developed for the sampling and analysis of carbonyl compounds. Because of the role which formaldehyde plays in photochemistry, most of the more recent methods were designed to quantitate formaldehyde specifically. Early methods centered around wet chemical technology involving a bubbler or impinger containing a reactive reagent (1). In some cases the reactive reagent produced a color in the presence of formaldehyde. Examples of the more commonly used reagents were: 3-methyl-2-benzothiazolone hydrazone (MBTH), sodium sulfite, 4-hexylresorcinol, water, sodium tetrachloromercurate, and chromatropic acid. These reagents demonstrated high collection efficiency (>95%), provided fairly stable non-volatile products and minimized formation of undesirable by-products. Indeed, as part of U. S. Environmental Protection Agency's (EPA's) effort to quantitate atmospheric concentrations of formaldehyde, the National Air Sampling Network utilized the impinger technique for several years containing chromatrophic acid specifically for formaldehyde. However, impinger sampling had numerous weaknesses which eventually lead to its demise. They were**:**

- Labor intense.
- Used acidic/hazardous reagents.
- Lacked sensitivity.
- Prone to interferences.
- Poor reproducibility at ambient concentration levels.

As EPA's interest focused upon formaldehyde and it's sources, the development of passive personal sampling devices (PSDs) developed (2). These devices were mainly used by industrial hygienists to assess the efforts of respiratory exposure for formaldehyde on workers. However, because of the design and flow rate limitation, they require long exposures (up to 7 days) to the atmosphere to meet traditional bubbler technique sensitivities. Consequently, the passive PSD had limited application to ambient monitoring.

To address the need for a monitoring method to sample carbonyl compounds in the air at sensitivities needed to reach health-base detection limits (10^{-6} risk level), a combination of wet chemistry and solid adsorbent methodology was developed (3-6). Activating or wetting the surface of an adsorbent with a chemical specific for reacting with carbonyl compounds allowed greater volumes of air to be sampled, thus enabling better sensitivity in the methodology. Various chemicals and adsorbents combinations have been utilized with various levels of success. The most commonly used technique is based on reacting airborne carbonyls with 2,4-dinitrophenylhydrazine (2,4-DNPH) coated on an adsorbent cartridge followed by separation and analysis of the hydrazone derivative by high performance liquid chromatography (HPLC) with ultraviolet (UV) detection.

1.3 Historically, Compendium Method TO-5, "*Method For the Determination of Aldehydes and Ketones in Ambient Air Using High Performance Liquid Chromatography (HPLC)*" was used to quantitate formaldehyde in ambient air. This method involved drawing ambient air through a midget impinger sampling train containing 10 mL of 2N HCl/0.05% 2,4-DNPH reagent. Formaldehyde (and other aldehydes and ketones) readily formed a stable derivative with the DNPH reagent, and the DNPH derivative is analyzed for aldehydes and ketones utilizing HPLC. Compendium Method T0-11 modifies the

sampling procedures outlined in Method TO-5 by introducing a coated adsorbent. Compendium Method TO-11 is based on the specific reaction of organic carbonyl compounds (aldehydes and ketones) with DNPH-coated silica gel cartridges in the presence of a strong acid, as a catalyst, to form a stable color hydrazone derivative according to the following reaction:

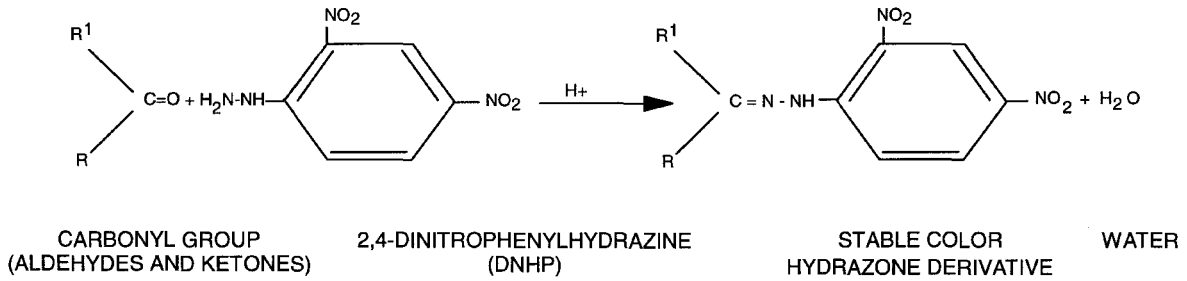

where R and R^1 are organic alkyl or aromatic group (ketones) or either substituent is a hydrogen (aldehydes). The reaction proceeds by nucleophilic addition to the carbonyl followed by 1,2-elimination of water to form the 2,4-diphenylhydrazone derivative. The determination of formaldehyde from the DNPH-formaldehyde derivative is similar to Method TO-5 in incorporating HPLC as the analytical methodology.

1.4 Due to recent requirements in atmospheric carbonyl monitoring, EPA has determined a need to update the present methodology found in Compendium Method TO-11. The revised Compendium Method TO-11A, as published here, incl

- Guidance on collocated sampling.
- Addition of ozone denuder or scrubber to reduce interferences.
- Sampler design update to allow heated-inlet and sequential sampling.
- Update HPLC procedure for column alternatives.
- Use of commercially prepared low pressure drop DNPH-coated cartridges.

The target compound for this method is formaldehyde; however, at least 14 other carbonyl compounds can be detected and quantified.

1.5 The sampling method gives a time-weighted average (TWA) sample. It can be used for long-term (1-24 hr) sampling of ambient air where the concentration of formaldehyde is generally in the low ppb (v/v) or for short-term (5-60 min) sampling of source-impacted atmospheres where the concentration of formaldehyde could reach the ppm (v/v) levels.

1.6 The method instructs the user to purchase commercially pre-coated DNPH cartridges. The method still includes the instructions of Compendium Method TO-11 for the preparation of DNPH-coated cartridges. However due to the tedious preparation and clean room requirements, the method recommends the purchase of pre-coated DNPH cartridges that are now commercially available from at least three major suppliers. Different from previous cartridges identified in Compendium Method TO-11, the pressure drop across the newer low-pressure drop cartridges are less than 37 inches of water at a sampling flow of up to 2.0 liters/minute, allowing compatibility with pumps used in personal sampling equipment. These pre-coated commercial cartridges have generally lower and more consistent background (7) concentration of carbonyls than cartridges prepared under normal chemical laboratory environment, as specified in the original Compendium Method TO-11.

1.7 The commercially-prepared pre-coated cartridges are used as received and are discarded after use. The collected and uncollected cartridges are stored in culture tubes with polypropylene caps and placed in cold storage when not in use.

1.8 This method may involve hazardous materials, operations, and equipments. This method does not purport to address all the safety problems associated with its use. It is the responsibility of whoever uses this method to consult and establish appropriate safety and health practices and determine the applicability of regulatory limitations prior to use.

2. Applicable Documents

2.1 ASTM Standards

- D1193 *Specification for Reagent Water*
- D1356 *Terminology Relating to Atmospheric Sampling and Analysis*
- D3195 *Practice for Rotameter Calibration*
- D3631 *Method for Measuring Surface Atmospheric Pressure*
- D5197 *Determination of Formaldehyde and Other Carbonyl Compounds in Air (Active Sampler Methodology)*
- E177 *Practice for Use of the Terms Precision and Bias in ASTM Test Methods*
- E682 *Practice for Liquid Chromatography Terms and Relationships*

2.2 Other Documents

- *Technical Assistance Document for Sampling and Analysis Toxic Organic Compounds in Ambient Air*, U. S. Environmental Protection Agency, EPA-600/4-83-027, June 1983.
- *Quality Assurance Handbook for Air Pollution Measurement Systems*, U. S. Environmental Protection Agency, EPA-600/R-94-D38b, May 1994.
- *Compendium of Methods for the Determination of Toxic Organic Compounds in Ambient Air: Method TO-11, Second Supplement*, U. S. Environmental Protection Agency, EPA-600/4-89-018, March 1989.

2.3 Other Documents

- Existing Procedures (8-10).
- Ambient Air Studies (11-15).

3. Summary of Method

3.1 A known volume of ambient air is drawn through a prepacked cartridge coated with acidified DNPH at a sampling rate of 100-2000 mL/min for an appropriate period of time. Sampling rate and time are dependent upon carbonyl concentration in the test atmosphere.

3.2 After sampling, the sample cartridges and field blanks are individually capped and placed in shipping tubes with polypropylene caps. Sample identifying tags and labels are then attached to the capped tubes. The capped tubes are then placed in a polypropylene shipping container cooled to subambient temperature (~4°C), and returned to the laboratory for analysis. Alternatively, the sample vials can be placed in a thermally-insulated styrofoam box with appropriate padding for shipment to the laboratory. The cartridges may either be placed in cold storage until analysis or immediately washed by gravity feed elution with 5 mL of acetonitrile from a plastic syringe reservoir to a graduated test tube or a 5 mL volumetric flask.

3.3 The eluate is then diluted to a known volume and refrigerated until analysis.

3.4 For determining formaldehyde, the DNPH-formaldehyde derivative can be determined using isocratic reverse phase HPLC with an ultraviolet (UV) absorption detector operated at 360 nm. To determine formaldehyde and 14 other carbonyls, the HPLC system is operated in the linear gradient program mode.

3.5 For quantitative evaluation of formaldehyde and other carbonyl compounds, a cartridge blank is likewise desorbed and analyzed.

3.6 Formaldehyde and other carbonyl compounds in the sample are identified and quantified by comparison of their retention times and peak heights or peak areas with those of standard solutions. Typically, C_1-C_7 carbonyl compounds, including benzaldehyde, are measured effectively to less than 0.5 ppbv.

4. Significance

4.1 Formaldehyde is a major compound in the formation of photochemical ozone (16). Short term exposure to formaldehyde and other specific aldehydes (acetaldehyde, acrolein, crotonaldehyde) is known to cause irritation of the eyes, skin, and mucous membranes of the upper respiratory tract (19). Animal studies indicate that high concentrations can injure the lungs and other organs of the body (19). In polluted atmospheres, formaldehyde may contribute to eye irritation and unpleasant odors that are common annoyances.

4.2 Over the last several years, carbonyl compounds including low molecular weight aldehydes and ketones have received increased attention in the regulatory community. This is due in part to their effects on humans and animals as primary irritation of the mucous membranes of the eyes, the upper respiratory tract, and the skin. Animal studies indicate that high concentrations of carbonyl compounds, especially formaldehyde, can injure the lungs, may contribute to eye irritation and effect other organs of the body. Aldehydes, either directly of indirectly, may also cause injury to plants. Sources of carbonyl compounds into the atmosphere range from natural occurrences to secondary formation through atmospheric photochemical reactions. Consequently, carbonyl compounds are both primary (directly emitted) and secondary (formed in the atmosphere) air pollutants (19).

4.2.1 Natural Occurrence. Natural sources of carbonyls do not appear to be important contributors to air pollution. Acetaldehyde is found in apples and as a by-product of alcoholic fermentation process. Other lower molecular weight aliphatic aldehydes are not found in significant quantities in natural products. Olefinic and aromatic aldehydes are present in some of the essential oils in fruits and plants. These include citronella, in rose oil; citral, in oil of lemongrass; benzaldehyde, in oil of bitter almonds; and cinnamaldehyde, in oil of cinnamon.

4.2.2 Production Sources. Aldehydes are commercially manufactured by various processes, depending on the particular aldehyde. In general, they are prepared via oxidation reactions of hydrocarbons, hydroformulation of alkenes, dehydrogenation of alcohols, and addition reactions between aldehydes and other compounds. Formaldehyde is manufactured from the oxidation of methanol as illustrated in the following equation:

$$CH_3OH \xrightarrow{[cat.]} CH_2O + H_2$$

Formaldehyde and other aldehyde production in the United States has shown a substantial growth over the last several years. This is due, in part, to their use in a wide variety of industries, such as the chemical, rubber, tanning, paper, perfume, and food industries. The major use is as an intermediate in the synthesis of organic compounds, including, alcohols, carboxylic acids, dyes, and medicinals.

4.2.3 Mobile Combustion Sources. A major source of carbonyl compounds in the atmosphere may be attributed to motor vehicle emissions. In particular, formaldehyde is the major carbonyl in automobile exhaust, accounting for 50-70 percent of the total carbonyl burden to the atmosphere (19). Furthermore, motor vehicles emit reactive hydrocarbons that undergo photochemical oxidation to produce formaldehyde and other carbonyls in the atmosphere.

4.3 Secondary Pollutant. As a secondary pollutant (formed in the atmosphere), carbonyls are formed by very complex photo-oxidation mechanism involving volatile organic compounds (VOCs) with nitrogen oxide (20,21). Both anthropogenic and biogenic (e.g., isoprene) hydrocarbons leads to *in situ* formation of carbonyls, especially formaldehyde compounds. Aldehydes are both primary pollutants and secondary products of atmospheric photochemistry.

The complete photo-oxidation mechanism is indeed complex and not well understood. However, a brief discussion is warranted (22). When VOCs and oxides of nitrogen (NO_x) are in the atmosphere and are irradiated with sunlight, their equilibrium in the photostationary state is changed. The photostationary state is defined by the equilibrium between nitrogen dioxide (NO_2), nitrous oxide (NO) and ozone (O_3). This equilibrium is theoretically maintained until VOCs are introduced. Various reactions occur to produce OH radicals. The VOCs react with the OH radicals and produce RO_2 radicals that oxidizes NO to NO_2, destroying the photostationary state. Carbonyls react with OH to produce RO_2 radicals. Likewise carbonyls, particularly formaldehyde in sunlight, are sources of the OH radicals.

The results of these processes lead to the following:

- Accumulation of ozone.
- Oxidation of hydrocarbons (HCs) to aldehydes and ketones which lead to the continued production of $HO_2\cdot$ and OH· radicals, the real driving force in photochemistry smog.

Consequently, the determination of formaldehyde and other carbonyl compounds in the atmosphere is of interest because of their importance as precursors in the production of photochemical smog, as photochemical reaction products and as major source of free radicals in the atmosphere.

4.4 Historically, DNPH impinger techniques have been widely used to determine atmospheric carbonyls. However, due to the limitation of applying this technique to remote locations, the solid adsorbent methodology has become a convenient alternative to impinger sampling. A number of solid adsorbents have been used over the years to support the DNPH coating. They are: glass beads, glass fiber filters, silica gel, Chromosorb® P, Florisil®, Carbopack® B, XAD-2, and C18. Several of these adsorbents are available commercially as pre-packed cartridges. The commercially available cartridges provide convenience of use, reproducibility and low formaldehyde blanks. Two of the more widely used pre-packed adsorbents are silica gel and C18.

4.4.1 Silica Gel. Silica gel is a regenerative adsorbent, consisting of amorphous silica (SiO_2) with surface OH groups, making it a polar material and enhancing surface absorption. DNPH-coated silica gel cartridges have been used by numerous investigators since 1980 for sampling formaldehyde in ambient air. Tejada (3,4) evaluated several adsorbents, including C18, Florsil, silanized glass wool, and silica gel as possible supports for the DNPH coating. Results indicated that silica gel provided the best support with minimum interferences. The studies did document that olefinic aldehydes such as acrolein and crotonaldehyde degraded partially and formed unknown species. For stable carbonyls such as formaldehyde, acetaldehyde, propionaldehyde, benzaldehyde, and acetone, correlation with an DNPH-impinger technique was excellent. However, further studies by Arnts and Tejada identified a severe loss of carbonyl-DNPH derivative due to the reaction of atmospheric ozone on DNPH-coated silica gel cartridges while sampling ambient air. This bias was eliminated when sampling continued with the application of an ozone scrubber system (KI denuder) preceding the cartridge.

4.4.2 C18 Cartridge. C18 is an octadecylsilane bonded silica substrate which is non-polar, hydrophobic, and relatively inert, whose surface has been passivated with non-polar paraffinic groups. Because of these qualities,

C18 has been used historically as an adsorbent trap for trace organics in environmental aqueous samples through hydrophobic interactions. The adsorbed trace organic molecules are then eluted from the adsorbent with various organic solvents. In early 1990, C18 was used in an ambient air study as the support for DNPH. While C18 showed promising results (23), it's use today as the support for DNPH is limited.

4.5 Both adsorbents have historically performed adequately as the support for the DNPH coating. The comparison between silica gel and C18 as the adsorbent for the DNPH is illustrated in Table 1. The user is encouraged to review the weaknesses and strengths outlined in Table 1 for using silica gel or C18 as the adsorbent for the DNPH coating.

5. Definitions

[Note: Definitions used in this document and any user-prepared Standard Operating Procedures (SOPs) should be consistent with those used in ASTM D1356. All abbreviations and symbols are defined within this document at the point of first use.]

5.1 C18— C18 is an octadecylsilane bonded silica substrate, which is non-polar, hydrophobic, and relatively inert.

5.2 HPLC— high performance liquid chromatography.

5.3 Method Detection Limit (MDL)— the minimum concentration of an analyte that can be reported with 95% confidence that the value is above zero, based on a standard deviation of at least seven repetitive measurements of the analyte in the matrix of concern at a concentration near the low standard.

5.4 Photochemical Reaction— any chemical reaction that is initiated as a result of absorption of light.

5.5 Photochemical Smog— air pollution resulting from photochemical reactions.

5.6 ppbv— a unit of measure of the concentration of gases in air expressed as parts of the gas per billion (10^9) parts of the air-gas mixture, normally both by volume.

5.7 ppmv— a unit of measure of the concentration of gases in air expressed as parts of the gas per million (10^6) parts of the air-gas mixture, normally both by volume.

5.8 Silica Gel—silica gel is a regenerative adsorbent consisting of amorphous silica (SiO_2) with OH surface groups making it a polar material and enhancing surface reactions.

5.9 Denuder— A device designed to remove gases from an air sampling stream by the process of molecular diffusion to a collecting surface.

5.10 Certification Blank— certification blank is defined as the mean value of the cartridge blank plus three standard deviations. For Compendium Method TO-11A, the Certification Blank should be less than 0.15 µg/cartridge for formaldehyde.

5.11 Cartridge Blank— cartridge blank is the measured value of the carbonyl compounds on an unsampled, DNPH-coated cartridge. This is the value used in the calculations delineated in section 12.

5.12 Scrubber— to remove a specific gas from the air stream by passing through a pack bed.

6. Extended Methodology and Common Interferences

6.1 This procedure has been written specifically for the sampling and analysis of formaldehyde. Other carbonyl compounds found in ambient air are also observed in the HPLC analysis. Resolution of these compounds depend upon column and mobile phase conditions during HPLC analysis. Organic compounds that have the same retention time and significant absorbance at 360 nm as the DNPH derivative of formaldehyde will interfere. Such interferences (24) can often be overcome by altering the separation conditions (e.g., using alternative HPLC columns or mobile phase compositions). In addition, other aldehydes and ketones can be detected with a modification of the basic procedure. In particular, chromatographic conditions can be optimized to separate acetone and propionaldehyde and 12 other higher molecular weight aldehydes and ketones (within an analysis time of about one hour), as identified below, by utilizing one or two Zorbax ODS columns in series under a linear gradient program:

Formaldehyde	Isovaleraldehyde	Propionaldehyde	p-Tolualdehyde
Acetaldehyde	Valeraldehyde	Crotonaldehyde	Hexanaldehyde
o-Tolualdehyde	Butyraldehyde	2,5-Dimethylbenzaldehyde	Methyl ethyl ketone
Acetone	m-Tolualdehyde	Benzaldehyde	

The linear gradient program varies the mobile phase composition periodically to achieve maximum resolution of the C-3, C-4, and benzaldehyde region of the chromatogram.

6.2 Formaldehyde may be a contamination of the DNPH reagent. If user- prepared cartridges are employed, the DNPH must be purified by multiple recrystallizations in UV grade carbonyl-free acetonitrile. Recrystallization is accomplished at 40-60°C by slow evaporation of the solvent to maximize crystal size. The purified DNPH crystals are stored under UV grade carbonyl-free acetonitrile until use. Impurity levels of carbonyl compounds in the DNPH are determined by HPLC prior to use and should be less than the Certification Blank value of 0.15 μg/cartridge.

6.3 The purity of acetonitrile is an important consideration in the determination of allowable formaldehyde blank concentration in the reagent. Background concentrations of formaldehyde in acetonitrile will be quantitatively converted to the hydrazone, adding a positive bias to the ambient air formaldehyde concentration. Within the project quality control procedures, the formaldehyde in the acetonitrile reagent should be checked on a regular basis (see Section 9.1).

6.4 Ozone at high concentrations has been shown to interfere negatively by reacting with both the DNPH and its carbonyl derivatives (hydrazones) on the cartridge (25,26). The extent of interference depends on the temporal variations of both the ozone and the carbonyl compounds and the duration of sampling. Significant negative interference from ozone was observed even at concentrations of formaldehyde and ozone typical of clean ambient air (i.e., 2 and 40 ppb, respectively).

6.5 Exposure of the DNPH-coated sampling cartridges to direct sunlight may produce artifacts and should be avoided.

6.6 The presence of ozone in the sample stream is readily inferred from the appearance of new compounds with retention times different from the other carbonyl hydrazone compounds.

6.7 The most direct solution to the ozone interference is to remove the ozone before the sample stream reaches the coated cartridge. This process entails constructing an ozone denuder (9) or scrubber and placing it in front of the cartridge. The denuder can be constructed of 1 m of 0.64-cm outside diameter (O.D.) by 0.46-cm inside diameter (I.D.) copper tubing, that is filled with a saturated solution of KI, allowed to stand for a few minutes, drained and dried

with a stream of clean air or nitrogen for about 1 h. The capacity of the ozone denuder as described is about 100,000 ppb-hour of ozone. Packed-bed granular potassium iodide (KI) scrubbers can also be used in place of the denuder and are commercially available. Very little work has been done on long term usage of a denuder or KI scrubber to remove ozone from the ambient air gas stream. The ozone removal devices should be replaced periodically (e.g., monthly) in the sample train to maintain the integrity of the data generated.

6.8 Test aldehydes or carbonyls (formaldehyde, acetaldehyde, acrolein, propionaldehyde, benzaldehyde, and p-tolualdehyde) that were dynamically spiked into an ambient sample air stream passed through the KI denuder with practically no losses (7). Similar tests were also performed for formaldehyde (26).

6.9 Ozone scrubbers (cartridge filled with granular KI) are also available from suppliers of pre-coated DNPH cartridges. These scrubbers are optimized when the ambient air contains a minimum of 15% relative humidity.

7. Apparatus

7.1 Isocratic HPLC. System consisting of a mobile phase reservoir a high pressure pump; an injection valve (automatic sampler with an optional 25-µL loop injector); a Zorbax ODS (DuPont Instruments, Wilmington, DE) reverse phase (RP) column, or equivalent (25-cm x 4.6-mm ID); a variable wavelength UV detector operating at 360 nm; and a data system, as illustrated in Figure 1.

[Note: Most commercial HPLC analytical systems will be adequate for this application.]

7.2 Cartridge sampler. Prepacked, pre-coated cartridge (see Figure 2), commercially available or coated *in situ* with DNPH according to Section 9.

[Note: This method was developed using the Waters Sep-Pak cartridge, coated in situ with DNPH on silica gel by the users, as delineated in the original Compendium Method TO-11 as a guideline. EPA has experience in use of this cartridge during various field monitoring programs over the last several years. Other manufacturer's cartridges should work as well. However, modifications to these procedures may be necessary if another commercially available cartridge is selected.]

Major suppliers of pre-coated cartridges are:

- Supelco, Supelco Park, Bellefonte, PA 16823-0048, (800) 247-6628.
- SKC Inc., 334 Valley View Road, Eighty Four, PA 15330-9614, (800) 752-8472.
- Millipore/Waters Chromatography, P.O. Box 9162, Marlborough, MA 01752-9748, (800) 252-4752.
- Atmospheric Analysis and Consulting (AAC) Inc., 4572 Telephone Rd., Suite 920, Ventura, CA 93003, (805) 650-1642.

[Note: The SKC cartridge (see Figure 2) is an example of a dual bed tube. The glass cartridge contains a front bed of 300 mg DNPH-coated silica gel with the back bed of 150 mg DNPH-coated silica gel. Air flow through the tube should be from front to back bed, as indicated by the arrows enscribed on the cartridge. The dual bed tube cartridge may be used in atmospheres containing carbonyl concentrations in excess of the American Conference of Government Industrial Hygienists (ACGIH) 8-hour exposure limit, where breakthrough of carbonyls on the adsorbent might occur. If used in routine ambient air monitoring applications, the tube is recovered as one unit, as specified in Section 11.2.]

If commercially prepared DNPH-coated cartridges are purchased, ensure that a *"Certification Blank for Formaldehyde"* is provided for the specific batch of which that cartridge is a member. For a commercial cartridge to be acceptable, the following criteria must be met:

- Formaldehyde concentration: <0.15 µg/cartridge.

If the enhanced carbonyl analysis is being performed, the following Certification Blank criteria must also be met:

- Speciated carbonyl concentration:
  - Acetaldehyde: <0.10 µg/cartridge
  - Acetone: <0.30 µg/cartridge
  - Other: <0.10 µg/cartridge

Typical physical and chemical characteristics of commercial cartridge adsorbents are listed in Table 2 and illustrated in Figure 2.

7.3 Sampling system. the DNPH-cartridge approach is capable of accurately and precisely sampling 100-2000 mL/min of ambient air. The monitoring of carbonyl compounds has recently been enhanced by the promulgation of new ambient air quality surveillance regulations outlined in Title 40, Part 58. These regulations require States to establish additional air monitoring stations as part of their existing State Implementation Plan (SIP) monitoring network as part of EPA's Photochemical Assessment Monitoring Stations (PAMS) to include provisions for enhanced (1) monitoring of ozone and oxides of nitrogen (NO_x), (2) monitoring of volatile organic compounds (VOCs), (3) monitoring of meteorological parameters, and (4) monitoring selected carbonyl compounds (formaldehyde, acetone, and acetaldehyde). Specifically, monitoring for carbonyl involves:

- 8, 3 h sequential samples starting at midnight.
- 1, 24 h time-integrated "reality check" sample.

Consequently, the sampler must be able to accommodate numerous regulatory and practical needs. Practical needs would include:

- Ability to sequence two cartridges in series for breakthrough volume confirmation for a 24-hour sampling event.
- Ability to collocate with any of the 8, 3 h samples.

Traditionally, three sampling approaches have been used to monitor carbonyl compounds in the ambient air. They are:

- Manual single-port carbonyl sampler.
- Programmable single-port carbonyl sampler.
- Automated multi-port sampler.

Components of the single-port carbonyl sampler, for both manual and semi-automatic, are illustrated in Figure 3. Components usually include a heated manifold/sample inlet, a denuder/cartridge assembly, a flow meter, a vacuum gauge/pump, a timer and a power supply. In operation, ambient air is drawn through the denuder/cartridge assembly with a vacuum pump at a fixed flow rate between 0.1 to 2 Lpm. The vacuum gauge is used to measure the net vacuum in the system for all flow-rate corrections. Controlling the system is usually a 7-day, 14-event timer to coordinate sampling events to allow a sample to be extracted continuously or intermittently over a period of time. Finally, an elapsed-time counter is employed to measure the actual time the sampling took place. This is particularly suitable for unattended sampling when power fails for short periods.

The automated multi-port sampler is especially designed to collect numerous short-term (2 to 3 hours) sample sequentially over a 24 hour, 7 day a week, nighttime and weekend monitoring period. This arrangement allows for the sampling of short periods where the objectives of the project are to identify progress of atmospheric reactions involving carbonyls. As illustrated in Figure 4, components of the fully automated multi-port carbonyl sampler

includes a heated inlet, ozone denuder (or scrubber) inlet manifold assembly, inlet check valves, DNPH multi-port cartridge assembly, exhaust manifold, mass flow controller and sample pump. The multi-port sampler automatically switches between sampling ports at preselected times, as programmed by the user. Typically, a sequential air sampler contains a microprocessor timer/controller that provides precise control over each sampling event. The microprocessor allows the user to program individual start date and time, sample duration, and delays between samples. The timer also allows activation of the flow system prior (approximately 10 min) to sequencing to allow purging of the sampler inlet with fresh sample. Finally, the automated sequential sampler can be operated from an external signal, such as an ozone monitor, so that sampling starts above certain preset ozone levels or via a modem. As a final option, various manufacturers provide wind sensor instrumentation (wind speed and direction) which is connected to the automated sequential sampler so that sampling begins when the wind is from a preset direction and speed.

Major suppliers of commercially available carbonyl samplers are:

- Supelco, Supelco Park, Bellefonte, PA 16823-0048, (800) 247-6628.
- SKC Inc., 334 Valley View Road, Eighty Four, PA 15330-9614, (800) 752-8472.
- Millipore/Waters Chromatography, P.O. Box 9162, Marlborough, MA 01752-9748, (800) 252-4752.
- XonTech, Inc. 6862 Hayvenhurst Avenue, Van Nuys, CA 91406, (818) 787-7380.
- ATEC Atmospheric Technology, P.O. Box 8062, Calabasas, CA 91372-8062, (310) 457-2671.
- Atmospheric Analysis and Consulting (AAC) Inc., 4572 Telephone Road, Suite 920, Ventura, CA 93003, (805) 650-1642.
- Scientific Instrumentation Specialists, P.O. Box 8941, Moscow, ID, (209) 882-3860.

7.4 Stopwatch.

7.5 Polypropylene shipping container (see Figure 5) with polyethylene-air bubble padding. To hold sample cartridges.

7.6 Thermometer. To record ambient temperature.

7.7 Barometer (optional).

7.8 Volumetric flasks. Various sizes, 5-2000 mL.

7.9 Pipets. Various sizes, 1-50 mL.

7.10 Erlenmeyer flask, 1 L. For preparing HPLC mobile phase.

7.11 Graduated cylinder, 1 L. For preparing HPLC mobile phase.

7.12 Syringe, 100-250 μL. For HPLC injection, with capacity at least four times the loop value.

7.13 Sample vials.

7.14 Melting point apparatus (optional).

7.15 Rotameters.

7.16 Calibrated syringes.

7.17 Soap bubble meter or wet test meter.

7.18 Mass flow meters and mass flow controllers. For metering/setting air flow rate through sample cartridge of 100-2000 mL/min.

[Note: The mass flow controllers are necessary because cartridges may develop a high pressure drop and at maximum flow rates, the cartridge behaves like a "critical orifice." Recent studies have shown that critical flow orifices may be used for 24-hour sampling periods at a maximum rate of 2 L/min for atmospheres not heavily loaded with particulates without any problems.]

7.19 Positive displacement. Repetitive dispensing pipets (Lab-Industries, or equivalent), 0-10 mL range.

7.20 Cartridge drying manifold. With multiple standard male Luer® connectors.

7.21 Liquid syringes. 10 mL (polypropylene syringes are adequate) for preparing DNPH-coated cartridges.

7.22 Syringe rack. Made of an aluminum plate (0.16 cm x 36 cm x 53 cm) with adjustable legs on four corners. A matrix (5 cm x 9 cm) of circular holes of diameter slightly larger than the diameter of the 10-mL syringes was symmetrically drilled from the center of the plate to enable batch processing of 45 cartridges for cleaning, coating, and/or sample elution.

7.23 Luer® fittings/plugs. To connect cartridges to sampling system and to cap prepared cartridges.

7.24 Hot plates, beakers, flasks, measuring and disposable pipets, volumetric flasks, etc. Used in the purification of DNPH.

7.25 Culture tubes (20 mm x 125 mm) with polypropylene screw caps. Used to transport coated cartridges for field applications (see Figure 5), Fisher Scientific, Pittsburgh, PA, or equivalent.

7.26 Polyethylene gloves. Used to handle cartridges, best source.

7.27 Dry test meter.

7.28 User-prepared copper tubing for ozone scrubber (see Figure 6a). A 36 inch length of ¼-inch O.D. copper tubing is used as the body of the ozone scrubber. The tubing should be coiled into a spiral approximately 2 inches in O.D. EPA has considerable field experience with the use of this denuder.

[Note: Ozone scrubbers (cartridge filled with granular KI) are also available from suppliers of pre-coated DNPH cartridges, as illustrated in Figure 6(b).]

7.29 Cord heater and Variac. A 24 inch long cord heater, rated at approximately 80 watts, wrapped around the outside of the copper coil denuder, controlled by a Variac, to provide heat (~50°C) to prevent condensation of water or organic compounds from occurring within the coil.

7.30 Fittings. Bulkhead unions are attached to the entrance and exit of the copper coil to allow attachment to other components of the sampling system.

8. Reagents and Materials

[Note: Purity of Reagents—Reagent grade chemicals shall be used in all tests. Unless otherwise indicated, it is intended that all reagents conform to the specifications of the Committee on Analytical Reagents of the American Chemical Society where such specifications are available; Purity of Water—Unless otherwise indicated, references to water shall be understood to mean reagent water as defined by Type II of ASTM Specifications D 1193.]

8.1 2,4-Dinitrophenylhydrazine (DNPH). Aldrich Chemical or J.T. Baker, reagent grade or equivalent. Recrystallize at least twice with UV grade acetonitrile before use.

8.2 DNPH coated cartridges. DNPH coated cartridge systems are available from several commercial suppliers.
8.3 High purity acetonitrile. UV grade, Burdick and Jackson "distilled-in-glass," or equivalent. The formaldehyde concentration in the acetonitrile should be <1.5 ng/mL. It is imperative (mandatory) that the user establish the purity of the acetonitrile before use (see Section 9.1).

8.4 Deionized-distilled water. Charcoal filtered.

8.5 Perchloric acid. Analytical grade, best source, 60%, specific gravity 1.51.

8.6 Ortho-phosphoric acid. Analytical grade, best source, 36.5-38%, specific gravity 1.19.

8.7 Formaldehyde. Analytical grade, best source, 37% solution (w/w).

8.8 Aldehydes and ketones, analytical grade, best source. Used for preparation of DNPH derivative standards (optional).

8.9 Carbonyl hydrazones. Formaldehyde and other carbonyl hydrazones are available for use as standards from commercial sources at various levels of purity.

8.10 Ethanol or methanol. Analytical grade, best source.

8.11 Nitrogen. High purity grade, best source.

8.12 Charcoal. Granular, best source.

8.13 Helium. High purity grade, best source.

8.14 Potassium Iodide. Analytical grade, best source. Used for coating inside of copper tubing of denuder system to remove ozone interference.

9. Preparation of Reagents and Cartridges

9.1 Purity of the Acetonitrile

9.1.1 The purity of acetonitrile is an important consideration in the determination of the formaldehyde blank concentration. Formaldehyde in the reagent will be quantitatively converted to the hydrazone and measured as part of the blank. The contribution to the blank from the reagent is dependent on the formaldehyde concentration in the reagent and the amount of the reagent used for extraction. Some examples will illustrate these considerations.

Example A

- Silica gel DNPH cartridge has a blank level of 60 ng.
- Cartridge is eluted with 5-mL of acetonitrile reagent containing a formaldehyde of 3 ng/mL.
- Analyst measures a blank level of 75 ng of which 80% comes from the cartridge and 20% comes from the reagent.

Example B

- Silica gel DNPH cartridge has a blank level of 30 ng.
- Cartridge is eluted with 5 mL of acetonitrile reagent containing a formaldehyde of 6 ng/mL.
- Analyst measures a blank level of 60 ng of which 50% comes from the cartridge and 50% comes from the reagent.

9.1.2 As a quality control procedure, the formaldehyde in the acetonitrile reagent should be checked on a regular basis. This can be done by mixing known proportions of the acetonitrile reagent and a DNPH solution having a measured formaldehyde blank. (The extract from a blank cartridge can serve as the DNPH solution.) After analyzing the resultant solution, a mass balance is performed on the observed formaldehyde level and the contribution from the DNPH reagent as shown in the following example.

- 1 mL of a DNPH solution containing 2.1 ng/mL of formaldehyde (as carbonyl) is mixed with 9 mL of acetonitrile reagent containing as unknown formaldehyde blank. The analyst measures a resultant solution concentration of 1.55 ng of formaldehyde. This data can be used to calculate the formaldehyde in the reagent:

$$HCHO\ ng/mL = \frac{(1.55\ ng/mL \times 10\ mL - 2.1\ ng/mL \times 1\ mL)}{9\ mL} = 1.49\ ng/mL$$

The formaldehyde contribution to the cartridge blank should be as low as possible but certainly less than 20% of the total measured blank. Using a cartridge blank level of 30 ng/cartridge, the formaldehyde concentration in the reagent would have to be less than 1.5 ng/mL (i.e., 50 n*M*) to give a blank level less than 20% of the measured blank.

9.2 Purification of 2,4-Dinitrophenylhydrazine (DNPH)

[Note: This procedure should be performed under a properly ventilated hood, as inhalation of acetonitrile can result in nose and throat irritation. Various health effects are resultant from the inhalation of acetonitrile. At 500 ppm in air, brief inhalation has produced nose and throat irritation. At 160 ppm, inhalation for 4 hours has caused flushing of the face (2 hour delay after exposure) and bronchial tightness (5 hour delay). Heavier exposures have produced systemic effects with symptoms ranging from headache, nausea, and lassitude to vomiting, chest or abdominal pain, respiratory depression, extreme weakness, stupor, convulsions and death (dependent upon concentration and time).]

[Note: Purified DNPH, suitable for preparing cartridges, can be purchased commercially.]

9.2.1 Prepare a supersaturated solution of DNPH by boiling excess DNPH in 200 mL of acetonitrile for approximately one hour.

9.2.2 After one hour, remove and transfer the supernatant to a covered beaker on a hot plate and allow gradual cooling to 40-60°C.

9.2.3 Maintain the solution at this temperature (40-60°C) until 95% of solvent has evaporated.

9.2.4 Decant solution to waste, and rinse crystals twice with three times their apparent volume of acetonitrile.

9.2.5 Transfer crystals to another clean beaker, add 200 mL of acetonitrile, heat to boiling, and again let crystals grow slowly at 40-60°C until 95% of the solvent has evaporated.

9.2.6 Repeat rinsing process as described in Section 9.2.4.

9.2.7 Take an aliquot of the second rinse, dilute 10 times with acetonitrile, acidify with 1 mL of 3.8 M perchloric acid per 100 mL of DNPH solution, and analyze by HPLC.

[Note: An acid is necessary to catalyze the reaction of the carbonyls with DNPH. Most strong inorganic acids such as hydrochloric, sulfuric, phosphoric, or perchloric acids will do the job. Perchloric or phosphoric acids are the preferred catalyst for using acetonitrile solution of DNPH as the absorbing solution. The DNPH derivatives do not precipitate from solution as readily as when hydrochloric or phosphoric acids are used as the catalyst. This is an ideal situation for an HPLC analytical finish as this minimizes sample handling. For most ambient air sampling, precipitation is not a problem because the carbonyl concentration is generally in the ppb range.]

9.2.8 An impurity level of <0.15 μg/cartridge of formaldehyde in DNPH-coated cartridge is acceptable (based on the Certification Blank section 5.10). An acceptable impurity level for an intended sampling application may be defined as the mass of the analyte (e.g., DNPH-formaldehyde derivative) in a unit volume of the reagent solution equivalent to less than one tenth (0.1) the mass of the corresponding analyte from a volume of an air sample when the carbonyl (e.g., formaldehyde) is collected as DNPH derivative in an equal unit volume of the reagent solution. An impurity level unacceptable for a typical 10 L sample volume may be acceptable if sample volume is increased to 100 L. If the impurity level is not acceptable for intended sampling application, repeat recrystallization.

9.2.9 If the impurity level is not satisfactory, pipet off the solution to waste, then add 25 mL of acetonitrile to the purified crystals. Repeat rinsing with 20 mL portions of acetonitrile until a satisfactorily low impurity level in the supernatant is confirmed by HPLC analysis.

9.2.10 If the impurity level is satisfactory, add another 25 mL of acetonitrile, stopper and shake the reagent bottle, then set aside. The saturated solution above the purified crystals is the stock DNPH reagent.

9.2.11 Maintain only a minimum volume of saturated solution adequate for day to day operation. This will minimize wastage of purified reagent should it ever become necessary to re-rinse the crystals to decrease the level of impurity for applications requiring more stringent purity specifications.

9.2.12 Use clean pipets when removing saturated DNPH stock solution for any analytical applications. Do not pour the stock solution from the reagent bottle.

9.3 Preparation of DNPH-Formaldehyde Derivative

[Note: Purified crystals or solutions of DNPH-derivatives can be purchased commercially.]

9.3.1 To a portion of the recrystallized DNPH, add sufficient 2N HCl to obtain an approximately saturated solution. Add to this solution formaldehyde (other aldehydes or ketones may be used if their detection is desirable), in molar excess of the DNPH. Allow it to dry in air.

9.3.2 Filter the colored precipitate, wash with 2N HCl and water and let the precipitate air dry.

9.3.3 Check the purity of the DNPH-formaldehyde derivative by melting point determination or HPLC analysis. The DNPH-formaldehyde derivative should melt at 167°C ± 1°C. If the impurity level is not acceptable, recrystallize the

derivative in ethanol. Repeat purity check and recrystallization as necessary until acceptable level of purity (e.g., 99%) is achieved.

9.3.4 DNPH derivatives of formaldehyde and other carbonyls suitable for use as standards are commercially available both in the form of pure crystals and as individual or mixed stock solutions in acetonitrile.

9.4 Preparation of DNPH-Formaldehyde Standards

9.4.1 Prepare a standard stock solution of the DNPH-formaldehyde derivative by dissolving accurately weighed amounts in acetonitrile.

9.4.2 Prepare a working calibration standard mix from serial dilution of the standard stock solution. The concentration of the DNPH-formaldehyde compound in the standard mix solutions should be adjusted to reflect relative distribution in a real sample.

[Note: Individual stock solutions of approximately 100 mg/L are prepared by dissolving 10 mg of the solid derivative in 100 mL of acetonitrile. The individual solution is used to prepare calibration standards containing the derivative of interest at concentrations of 0.5-20 μg/mL, which spans the concentration of interest for most ambient air work.]

9.4.3 Store all standard solutions in a refrigerator. They should be stable at least one month.

9.4.4 DNPH-formaldehyde standards can also be purchased from various commercial suppliers. If purchased, ensure that a "*Certification of Concentration*" is provided.

9.5 Preparation of DNPH-Coated Cartridges

[Note: This procedure must be performed in an atmosphere with a very low aldehyde background. All glassware and plastic ware must be scrupulously cleaned and rinsed with deionized water and carbonyl free acetonitrile. Contact of reagents with laboratory air must be minimized. Polyethylene gloves must be worn when handling the cartridges. If the user wishes to purchase commercially prepared DNPH-coated cartridges, they are available from various vendors. If commercial prepared DNPH-coated cartridges are purchased, ensure that a "Certification Blank for Formaldehyde" is provided for the specific batch of which that cartridge is a member. For a commercial cartridge to be acceptable, the following criteria must be met:

- *Formaldehyde concentration: <0.15 µg/cartridge.*

If the enhanced carbonyl analysis is being performed, the following Certification Blank criteria must also be met:

- *Speciated carbonyl concentration:*
  - *Acetaldehyde: <0.10 µg/cartridge*
  - *Acetone: <0.30 µg/cartridge*
  - *Other: <0.10 µg/cartridge*

One who is not experienced in the preparation of DNPH-coated cartridge is strongly advised to use certified commercially available cartridges.]

9.5.1 DNPH Coating Solution

9.5.1.1 Pipet 30 mL of saturated DNPH stock solution to a 1000 mL volumetric flask, then add 500 mL acetonitrile.

9.5.1.2 Acidify with 1.0 mL of ortho-phosphoric acid (H_3PO_4).

[Note: The atmosphere above the acidified solution should preferably be filtered through a DNPH-coated cartridge to minimize contamination from laboratory air. Shake solution, then make up to volume with acetonitrile. Stopper the flask, invert and shake several times until the solution is homogeneous. Transfer the acidified solution to a reagent bottle with a 0-10 mL range positive displacement dispenser.]

9.5.1.3 Prime the dispenser and slowly dispense 10-20 mL to waste.

9.5.1.4 Dispense an aliquot solution to a sample vial, and check the impurity level of the acidified solution by HPLC according to Section 9.2.

9.5.1.5 The impurity level should be less than the Certification Blank of <0.15 μg/cartridge for formaldehyde, similar to that in the DNPH coating solution.

9.5.2 Coating of Cartridges

9.5.2.1 Open the pre-packed cartridge package, connect the short end to a 10-mL syringe, and place it in a syringe rack (see Figure 7).

[Note: Prepare as many cartridges (~100) and syringes as possible.]

9.5.2.2 Using a positive displacement repetitive pipet, add 10 mL of acetonitrile to each of the syringes (see Figure 7).

9.5.2.3 Let liquid drain to waste by gravity.

[Note: Remove any air bubbles that may be trapped between the syringe and the silica cartridge by displacing them with the acetonitrile in the syringe.]

9.5.2.4 Set the repetitive dispenser containing the acidified DNPH coating solution to dispense 7 mL into the cartridges.

9.5.2.5 Once the effluent flow at the outlet of the cartridge has stopped, dispense 7 mL of the DNPH coating reagent into each of the syringes (see Figure 7).

9.5.2.6 Let the coating reagent drain by gravity through the cartridge until flow at the other end of the cartridge stops.

9.5.2.7 Wipe the excess liquid at the outlet of each of the cartridges with clean tissue paper.

9.5.2.8 Assemble a drying manifold with a scrubber or "guard cartridge" connected to each of the ports (see Figure 7). These "guard cartridges" are DNPH-coated and serve to remove any trace of formaldehyde in the nitrogen gas supply.

9.5.2.9 Insert cartridge connectors (flared at both ends, 0.64 by 2.5-cm outside diameter TFE-fluorocarbon FEP tubing with inside diameter slightly smaller than the outside diameter of the cartridge port) onto the long end of the scrubber cartridges.

9.5.2.10 Remove the cartridges from the syringes and connect the short ends to the exit end of the scrubber cartridge.

9.5.2.11 Pass nitrogen through each of the cartridges at about 300-400 mL/min for 5-10 minutes.

9.5.2.12 Within 10 minutes of the drying process, rinse the exterior surfaces and outlet ends of the cartridges with acetonitrile using a Pasteur pipet.

9.5.2.13 Stop the flow of nitrogen after 15 minutes, wipe the cartridge exterior free of rinsed acetonitrile and remove the dried cartridge.

9.5.2.14 Plug both ends of the coated cartridge with standard polypropylene Luer® male plugs, place the plugged cartridge in a shipping tube with polypropylene screw caps.

9.5.2.15 Put a serial number and a lot number label on each of the individual shipping tubes.

9.5.2.16 Store shipping tubes containing the DNPH-coated cartridges in a refrigerator at 4°C until use.

[Note: Plugged cartridges may also be placed in screw-capped glass culture tubes and placed in a refrigerator until use. Cartridges will maintain their integrity for up to 90 days stored in refrigerated, capped shipping tubes.]

9.5.2.17 Take a minimum of 3 blank cartridges from the cartridge batch and analyze for formaldehyde, as delineated in Section 11. The batch of user-prepared DNPH-coated cartridges is acceptable if the following criteria are met:

- Formaldehyde Certification Blank: <0.15 µg/cartridge.

If the enhanced carbonyl analysis is being performed, the following certification criteria must also be met:

- Speciated carbonyl concentration:
  - Acetaldehyde: <0.10 µg/cartridge
  - Acetone: <0.30 µg/cartridge
  - Other: <0.10 µg/cartridge

9.5.2.18 If analysis meets the above criteria, provide documentation with all cartridges associated with

that batch involving *"Certification Blank for Formaldehyde."* This certificate must be part of the project records.

9.5.2.19 If the cartridge results are close to, but above the Certification Blank, run a few more blank cartridges to check background level.

9.5.2.20 If analysis indicates failure of the cartridge, then *all* cartridges in that batch are unacceptable. Prepare a new batch of cartridges according to Section 9.5 until certification is achieved.

9.5.2.21 Store all certified cartridges in a refrigerator at 4°C until use.

9.5.2.22 Before transport, remove the shipping container (or screw-capped glass culture tubes) containing the adsorbent tubes from the refrigerator and place culture tubes in a friction-top metal can containing 1-2 inches of charcoal for shipment to sampling location. Alternately, acidified DNPH-coated filters can be used in place of charcoal filters to remove impurity carbonyl compounds in the air.

9.5.2.23 As an alternative to friction-top cans for transporting sample cartridges, the coated cartridges could be shipped in their individual glass containers (see Figure 5a). A batch of coated cartridges may also be packed in a polypropylene shipping container for shipment to the field (see Figure 5b). The container should be padded with clean tissue paper or polyethylene-air bubble padding. Do not use polyurethane foam or newspaper as padding material.

9.5.2.24 The cartridges should be immediately stored in a refrigerator or freezer (<4°C) upon arrival in the field.

9.6 Equivalent Formaldehyde Cartridge Concentration

9.6.1 One can calculate the equivalent formaldehyde background concentration (ppbv) contributed from a commercial or user-prepared DNPH-coated cartridge following exposure to formaldehyde-free air.

9.6.2 The equivalent formaldehyde background concentration includes the contribution of formaldehyde from both the acetonitrile and the cartridge.

9.6.3 Knowing the equivalent background concentration, as determined by the user (see Section 9.5.2) or supplied by the commercial supplier (see *Note*, Section 9.5), of formaldehyde in the cartridge (ng/cartridge), the formaldehyde background concentration contributed by the DNPH-coated cartridge (thus the method minimum detection limits) can be related to the total sample volume, as identified in Table 3.

9.6.4 For example, if the averaged background formaldehyde concentration supplied by the manufacturer is 70 ng/cartridge, then that cartridge can add 0.95 ppbv of equivalent formaldehyde, to the final ambient air concentration value, as delineated in Table 3 for a total air volume of 60 L.

9.6.5 The user should use DNPH-coated cartridges with the lowest background concentration to improve accuracy and detection limits.

10. Sampling Procedure

10.1 The sampling system is assembled and should be similar to that shown in Figures 3 and 4.

[Note: Figures 3 and 4 illustrate different tube/pump configurations. The tester should ensure that the pump is capable of constant flow rate throughout the sampling period.]

It is recommended that the sampling system employ a heated inlet (~50°C) coupled to an ozone denuder or scrubber to minimize water and ozone interference associated with the DNPH-coated adsorbent tube. Historically, the coated cartridges have been used as direct probes and traps for sampling ambient air when the ambient temperature was above freezing.

[Note: As illustrated in Figure 8, the ozone denuder has been effective for up to 80 hours without

breakthrough at ozone levels of approximately 700 ppb. Other studies have evaluated both denuders and scrubbers at ozone concentrations between 125 and 200ppbv and found they have effectively removed ozone from the air stream for up to 100,000 ppb-hours; however, moisture was required (~10% RH) in the gas stream (26). The user should evaluate the length of time of the application of the denuder or scrubber to his field work. Caution should be utilized when using these devices for extensive periods of time at high humidity (>65%). Regarding the 24 hour samples, special caution shoud be taken while sampling nighttime periods when relative humidities approaching 100% are frequently encountered. It is recommended that routine schedule of ozone removal device replacement should be implemented as part of the sampling program.]

[Note: For sampling ambient air below freezing, a short length (30-60 cm) of heated (50-60°F) stainless steel tubing must be added to condition the air sample prior to collection on the DNPH-coated cartridges.]

10.2 Before sample collection, the system must be checked for leaks. Plug the inlet of the system so no flow is indicated at the output end of the pump. The mass flow meter should not indicate any air flow through the sampling apparatus.

10.3 Air flow through the DNPH-adsorbent cartridge may change during sampling as airborne particles deposit on the front of the cartridge. The flow change could be significant when sampling particulate-laden atmospheres. Particle concentrations greater than 50 ug/m^3 are likely to represent a problem. For unattended or extended sampling periods, a mass flow controller is highly recommended to maintain constant flow. The mass flow controller should be set at least 20% below the maximum air flow through the cartridge.

10.4 The entire assembly (including a "test" sampling cartridge) is installed and the flow rate checked at a value near the desired sampling rate. In general, flow rates of 1,000-2,000 mL/min should be employed. The total sample volume should be selected to ensure that the collected formaldehyde concentration exceeds the background formaldehyde DNPH-cartridge concentration, as illustrated in Table 3. The total moles of carbonyl in the volume of air sampled should

not exceed that of the DNPH concentration (i.e., 2 mg cartridge). In general, a safe estimate of the sample size should be 75% of the DNPH loading of the cartridge.

[Note: If the user suspects that there will be breakthrough of a DNPH-coated cartridge during the sampling event, a backup cartridge should be used during the first sampling event. One would analyze the back-up cartridge for formaldehyde. If the back-up cartridge concentration exceeds 10% of the formaldehyde concentration on the front cartridge, then continue to use back-up cartridges in the monitoring program. However, if formaldehyde is not detected above the average blank level in the back-up cartridge after the first sampling event, then one can continue to use only one cartridge under normal representative conditions.]

[Note: The SKC tube is a dual bed configuration, allowing one to analyze the back bed (see Figure 2) for quantifying breakthrough.]

Generally, calibration is accomplished using a soap bubble flow meter or calibrated wet test meter connected to the flow exit, assuming the system is sealed.

[Note: ASTM Method D3686 describes an appropriate calibration scheme that does not require a sealed flow system downstream of the pump.]

10.5 The operator must measure and record the sampling flow rate at the beginning and end of the sampling period to determine sample volume. A dry gas meter may be included in the system to measure total sample volume and to compare against the in-line mass flow controller. Some commerical systems use flow monitors with data loggers to make these measurements.

10.6 Before sampling, flush the inlet (denuder/manifold, etc.) for approximately 15 min at the established flow rate to condition the system. Remove the glass culture tube from the friction-top metal can or styrofoam box. Let the cartridge warm to ambient temperature in the glass tube before connecting it to the sample train.

10.7 Using polyethylene gloves, remove the DNPH-coated cartridge from the shipping container and connect it to the sampling system with a Luer® adapter fitting. Most commercially available cartridges are bidirectional. However, review manufacturer suggestions for orientation of the cartridge to the inlet of the sampler.

[Note: If using the SKC dual bed tube, ensure the ambient air is pulled through the tube in the direction enscribed on the tube by an arrow.]

Record the following parameters on Compendium Method TO-11A field test data sheet (FTDS), as illustrated in Figure 9: date, sampling location, time, ambient temperature, barometric pressure (if available), relative humidity (if available), dry gas meter reading (if appropriate), flow rate, rotameter setting, cartridge batch number, and dry gas meter pump identification numbers.

10.8 The sampler is turned on and the flow is adjusted to the desired rate. A typical flow rate through one cartridge is 1.0 L/min and 0.8 L/min for two tandem cartridges.

10.9 The sampler is operated for the desired period, with periodic recording of the variables listed in Figure 9.

10.10 If the ambient air temperature during sampling is below 15°C, a heated inlet probe is recommended. However, no pronounced effect of relative humidity (between 25% - 90%) has been observed for sampling under various weather

conditions--cold, wet, and dry winter months and hot and humid summer months. However, a negative bias has been observed when the relative humidity is <25%. At high humidity, the possibility of condensation must be guarded against, especially when sampling is an air conditioned trailer.

10.11 At the end of the sampling period, the parameters discussed in Section 10.7 are recorded and the sample flow is stopped. If a dry gas meter is not used, the flow rate must be checked at the end of the sampling interval. If the flow rates at the beginning and end of the sampling period differ by more than 10%, the sample should be marked as suspect.

10.12 Immediately after sampling, remove the cartridge (using polyethylene gloves) from the sampling system, cap with Luer® end plugs, and place it back in the original labeled glass shipping container or culture tube. Cap, seal with TFE-fluorocarbon tape, and place it in appropriate padding. Refrigerate at 4°C until analysis. Refrigeration period prior to analysis should not exceed 2 weeks. If a longer storage period is expected, the cartridge should be extracted with 5 mL of acetonitrile (see Section 11.2.4 and 11.2.5) and the eluant placed in a vial for long term storage.

[Note: If samples are to be shipped to a central laboratory for analysis, the duration of the non-refrigerated period should be kept to a minimum, preferably less than two days.]

10.13 If a dry gas meter or equivalent total flow indicator is not used, the average sample flow rate must be calculated according to the following equation:

$$Q_A = \frac{Q_1 + Q_2 + \ldots Q_N}{N}$$

where:

Q_A = average flow rate, L/min.
$Q_1, Q_2. \ldots Q_N$ = flow rates determined at beginning, end, and intermediate points during sampling, L/min.
N = number of points averaged.

10.14 The total flow rate is then calculated using the following equation:

$$V_m = (T_2 - T_1) \times Q_A$$

where:

V_m = total volume sampled at measured temperature and pressure, L.
T_2 = stop time, minutes.
T_1 = start time, minutes.
$T_2 - T_1$ = total sampling time, minutes.
Q_A = average flow rate, L/min.

10.15 The total volume (V_s) at EPA standard conditions, 25°C and 760 mm Hg, is calculated from the following equation:

$$V_s = V_m \times \frac{\overline{P}_A}{760} \times \frac{298}{273 + \overline{T}_A}$$

where:

V_s = total sample volume at 25°C and 760 mm Hg pressure, L.
V_m = total sample volume at measured temperature and pressure, L.
$\overline{P}_A$ = average ambient pressure, mm Hg.
$\overline{T}_A$ = average ambient temperature, °C.

11. Sample Analysis

11.1 Sample Preparation

11.1.1 The samples (trip blank, field blank and field samples) are returned to the laboratory in a shipping container and stored in a refrigerator at (<4°C) until analysis. Alternatively, the samples may also be stored alone in their individual containers.

11.1.2 The time between sampling and extraction should not exceed 2 weeks. Since background levels in the cartridges may change due to adsorption during storage, always compare field samples to their associated field and trip blank samples, stored under the same conditions.

11.2 Sample Extraction

[Note: Beware of unintentional exposure of samplers and eluted samples to aldehyde and ketone sources. Laboratory air often holds high concentrations of acetone. Labeling inks, adhesives, and packaging containers (including vials with plastic caps) are all possible sources on contamination.]

[Note: Contamination is most likely to occur during sample extraction. Before eluting derivatives, clean all glassware by rinsing with acetonitrile, then heating in a 60°C vacuum oven for at least 30 minutes. Eluting the samples in a nitrogen-purged glove bag further reduces the risk of contamination.

The acetonitrile used to elute the DNPH derivatives is a typical source of contamination. Formaldehyde-free acetonitrile used to elute samples should be used only for this purpose, and stored in a carbonyl free environment. A concentration of 10 µg/L of any aldehyde or ketone in the acetonitrile adds 0.05 µg of that carbonyl to sample blank values if using 5 mL extraction volumes.]

11.2.1 Remove the sample cartridge from the labeled shipping tube or container. Connect the sample cartridge to a clean syringe.(Some commerical cartridges do not require the addition of a syringe for elution.)

[Note: The liquid flow during desorption should be in the reverse direction of air flow during sample collection.]

11.2.2 Place the sample cartridge syringe in the syringe rack (see Figure 7).

[Note: If the two beds in the SKC tube are being recovered separately for breakthrough studies, break the tube and place the beds in separate vials. Add exactly 5 mL of acetonitrile to each vial. Proceed with recovery, as specified in Section 11.2.4 through Section 11.2.5. Particulate in the relatively small number of samples used in the breakthrough studies should not adversely impact the sample valve or back pressure.]

11.2.3 Backflush the cartridge (gravity feed) by passing 5 mL of acetonitrile from the syringe through the cartridge to a 5-mL volumetric flask. The backflush elution approach may add particulate particles also collected on the cartridge to the acetonitrile solution which can cause sample valve failure and increase column back pressure. To minimize this, frontflush the cartridge contents with the acetonitrile reagent rather than blackflush. The use of 5mL of acetonitrile is sufficient for quantitative cartridge sample elution in either mode.

[Note: A dry cartridge has an acetonitrile holdup volume of about 0.3 mL. The eluant flow may stop before the acetonitrile in the syringe is completely drained into the cartridge because of air trapped between the cartridge filter and the syringe Luer® tip. If this happens, displace the trapped air with the acetonitrile in the syringe using a long-tip disposable Pasteur pipet.]

11.2.4 Dilute to the 5-mL mark with acetonitrile. Label the flask with sample identification. Store in refrigerated conditions until the sample is analyzed by HPLC. Pipet two aliquots into sample vials with TFE-fluorocarbon-lined septa. Analyze the first aliquot for the derivative carbonyls by HPLC. Store the second aliquot in the refrigerator until the results of the analysis of the first aliquot are complete and validated. The second aliquot can be used for confirmatory analysis, if necessary.

11.2.5 Sample eluates are stable at 4°C for up to one month.

11.3 HPLC Analysis

11.3.1 The HPLC system is assembled and calibrated as described in Section 11.4. The operating parameters are as follows when formaldehyde is the only carbonyl of interest:

Column:	Zorbax ODS (4.6-mm ID x 25-cm), or equivalent.
Mobile Phase:	60% acetonitrile/40% water, isocratic.
Detector:	ultraviolet, operating at 360 nm.
Flow Rate:	1.0 mL/min.
Retention Time:	7 minutes for formaldehyde with one Zorbax ODS column. Thirteen minutes for formaldehyde with two Zorbax ODS columns.
Sample Injection Volume:	25 µL.

Before each analysis, the detector baseline is checked to ensure stable conditions.

11.3.2 The HPLC mobile phase is prepared by mixing 600 mL of acetonitrile and 400 mL of water. This mixture is filtered through a 0.22-μm polyester membrane filter in an all-glass and Teflon® suction filtration apparatus. The filtered mobile phase is degassed by purging with helium for 10-15 minutes (100 mL/min) or by heating to 60°C for 5-10 minutes in an Erlenmeyer flask covered with a watch glass. A constant back pressure restrictor (350 kPa) or short length (15-30 cm) of 0.25-mm (0.01 inch) ID Teflon® tubing should be placed after the detector to eliminate further mobile phase outgassing.

11.3.3 The mobile phase is placed in the HPLC solvent reservoir and the pump is set at a flow rate of 1.0 mL/min and allowed to pump for 20-30 minutes before the first analysis. The detector is switched on at least 30 minutes before the first analysis, and the detector output is displayed on a strip chart recorder or similar output device. The isocratic flow of 60% acetonitrile/40% water is adequate for the analysis of formaldehyde; however, sufficient time between air sample analyses is required to assure that all other carbonyl compounds are eluted from the HPLC column prior to the next sample. The gradient flow approach ,mentioned later (see Section 14.3) is properly programmed to elute other carbonyl compounds.

11.3.4 A 100-µL aliquot of the sample is drawn into a clean HPLC injection syringe. The sample injection loop (25-µL) is loaded and an injection is made. The data system, if available, is activated simultaneously with the injection. If a strip chart recorder is used, mark the point of injection on the chart paper.

11.3.5 After approximately one minute, the injection valve is returned to the "load" position and the syringe and valve are rinsed or flushed with acetonitrile/water mixture in preparation for the next sample analysis.

[Note: The flush/rinse solvent should not pass through the sample loop during flushing.]

The loop is cleaned while the valve is in the "load" mode.

11.3.6 After elution of the DNPH-formaldehyde derivative (see Figure 10), data acquisition is terminated and the component concentrations are calculated as described in Section 12.

11.3.7 After a stable baseline is achieved, the system can be used for further sample analyses as described above. Be sure to examine the chromatogram closely to ensure that background DNPH-formaldehyde derivative peaks are not on the solvent slope of the DNPH peak.

[Note: After several cartridge analyses, background buildup on the column may be removed by flushing with several column volumes of 100% acetonitrile.]

11.3.8 If the concentration of analyte exceeds the linear range of the instrument, the sample should be diluted with mobile phase, or a smaller volume can be injected into the HPLC.

11.3.9 If the retention time is not duplicated (±10%), the acetonitrile/water ratio may be increased or decreased to obtain the correct elution time. If the elution time is too long, increase the ratio; if it is too short, decrease the ratio. If retention time is not reproducing, the problem may be associated with the HPLC flow system. A control chart is recommended to evaluate retention time changes.

[Note: The chromatographic conditions described here have been optimized for the detection of formaldehyde. Analysts are advised to experiment with their HPLC system to optimize chromatographic conditions for their particular analytical needs. If a solvent change is necessary, always recalibrate before running samples.]

11.4 HPLC Calibration

11.4.1 Calibration standards can be prepared by the user in acetonitrile from the solid DNPH-formaldehyde derivative or liquid standards can be purchased from various manufacturers. From the solid compound, individual stock solutions of 100 ug/mL are prepared by dissolving 10 mg of solid derivative in 100 mL of acetronitrile. Since the MW of HCHO-hydrazone is 210 g/mol, and the MW of HCHO is 30 g/mol, the stock solution concentration converts to 14.3 ug/mL as formaldehyde (30/210 x 100mg/mL). The solid compound is weighed using a 5-place analytical balance and liquid dilutions are made with volumetric glassware. Stock solutions obtained from commercial suppliers generally range from 1 to 50 ug/mL as the carbonyl compound. These stock solutions are typically provided in 1 mL ampules.

11.4.2 Using the stock solution, working calibration standards are produced. To generate the highest concentration working standard, use a pipette to quantitatively transfer 1.00 ml of the stock solution to a 25 mL volumetric flask. For example, using a 14.3 ug/mL stock solution produces a working standard solution of 570 ng/mL

(14300 ng/mL x 1/25). The high concentration working standard diluted serially, using 1 to 5 mL pipettes and volumetric flasks, can produce working standards ranging between 28.5 and 570 ng/mL.

11.4.3 Each calibration standard (at least five levels) is analyzed three times and area response is tabulated against mass concentration injected (see Figure 11). All calibration runs are performed as described for sample analyses in Section 11.3. The results are used to prepare a calibration curve, as illustrated in Figure 12. The slope of the calibration curve gives the response factor, RF. Linear response is indicated where a correlation coefficient of at least 0.999 for a linear least-squares fit of the data (mass concentration versus area response) is obtained. The intercept of the calibration curve should pass through the origin. If it does not, check your reagents and standard solutions preparation procedure for possible contamination. If the calibration curve does not pass through the origin, the equation for the calibration curve should include the intercept.

11.4.4 Each new calibration curve should be verified by analyzing a standard prepared from material obtained from a second source. This standard should show a recovery of 85 to 115%. If not, corrective action is required to eliminate the discrepancy between the two sources of the standard material.

11.4.5 Once linear response has been documented, a concentration standard near the anticipated levels of each carbonyl component, but at least 10 times the detection limit, should be chosen for daily calibration. The day to day response for the various components should be within 10% of the calibration value. If greater variability is observed, prepare a fresh calibration check standard. If the variability using a freshly prepared calibration check standard is greater than 15% , a new calibration curve must be developed from fresh standards. A plot of the daily values on a Quality Control Chart (day versus concentration) is helpful to check for long term drift of the concentration value.

11.4.6 The response for each component in the daily calibration standard is used to calculate a response factor according to the following equation shown for formaldehyde:

$$RF_{HCHO} = \frac{(P - P_o)}{C_{HCHO}}$$

where:

RF_{HCHO} = response factor for formaldehyde given as area counts per ng/mL.
C_{HCHO} = concentration of analyte in the calibration standard in units of ng/mL.
P = peak area counts for the formaldehyde standard.
P_o = calibration curve intercept; in most cases this is zero.

11.4.7 The RF for each carbonyl compound is determined in the same way as that given for formaldehyde. The concentration of HCHO and other carbonyl compounds is determined with the calibration curves for each component in the analyzed sample. Example calculation for HCHO is given in section 12.

12. Calculations

Determination of the carbonyl compound air concentration requires three steps: (1) determination of the average blank and the standard deviation of the blank; (2) determination of the collected carbonyl compound mass of the cartridge; (3) calculation of the carbonyl compound air concentration. The following discusion provides these steps for formaldehyde.

12.1 Blank Determination

Since the blank level for any arbitary cartridge is unknown, an average value for the blank is used in the calculation. As noted earlier, the average blank value is determined for each lot of cartridges. For a given lot size, N, a minimum of $\sqrt{N}$ cartridge blanks (rounded to the next whole number) should be analyzed; i.e., for a lot size of

200, a minimum of $\sqrt{200}$ or 14 cartridge blanks should be analyzed. A minimum of 3 of these blanks are used for the Certification Blank, and the remaining 11 are used for field blanks. The mass of HCHO on each cartridge is determined by multiplying the observed peak area for blank cartridge solution by the acetonitrile extract volume (typically 5 mL) and dividing by the response factor as provided in the following equation:

$$M_{BL\text{-}HCHO_i} = \frac{P_{BL\text{-}HCHO_i} \times V_E}{RF_{HCHO}}$$

where:

$M_{BL\text{-}HCHOi}$ = the blank HCHO mass for cartridge , i.
RF_{HCHO} = HCHO response factor calculated in Section 11.4.5.
$P_{BL\text{-}HCHOi}$ = area counts for HCHO in blank sample extract.
V_E =extract volume in mL (usually 5 mL).

Once all blank cartridges have been measured, the average blank value is determined by the following equation:

$$\bar{M}_{BL\text{-}HCHO} = \frac{1}{N} \times \sum_{N}^{i=1} M_{BL\text{-}HCHO_i}$$

where:

$\bar{M}_{BL\text{-}HCHO}$ = the average HCHO mass for all cartridges.
$M_{BL\text{-}HCHOi}$ = blank HCHO mass for cartridge, i.
N = the number of blank cartridges.

[Note: Measurement of cartridge blanks should be distributed over the period that this particular cartridge lot is used for ambient air sampling. It is recommended that a trend plot of blank results be constructed to evaluate background carbonyl results over the period of cartridge lot utilization in the sampling program. If significant drifting is observed, blank average values should be segmented to be more representative of carbonyl background.]

12.2 Carbonyl Analyte Mass

The calculation equation for the mass of the collected carbonyl compounds on an individual cartridge is the same as that for the cartridge blanks. The gross measured carbonyl mass is determined with an equation analogous to that given in section 12.1. The equation for formaldehyde is given as**:**

$$M_{SA_i} = \frac{P_{SA_i} \times V_E}{RF_{HCHO}}$$

where:

M_{SAi} = gross HCHO mass for cartridge, i.
P_{SAi} = HCHO peak area counts for cartridge, I.

RF_{HCHO} = the response factor for HCHO.
V_E = acetonitrile extract volume in mL (typically 5 mL).

The net HCHO mass for an individual cartridge is determined by substracting the average blank value from the gross HCHO mass obtained for sample i, and is given as:

$$M_{HCHO_i} = M_{SA_i} - \bar{M}_{BL\text{-}HCHO}$$

12.3 Carbonyl Compound Concentration

The sample air concentration for carbonyl compounds cannot be determined directly from the mass measurement and requires conversion to units of volume. The conversion calculation for HCHO is determined using the ideal gas law and is given by the following equation:

$$V_{HCHO_i} = \frac{M_{HCHO_i}}{MW} \times (R \times T_{AMB}) \times \frac{760}{P_{AMB}}$$

where:

V_{HCHOi} = gas volume of HCHO on cartridge, i.
M_{HCHOi} = mass of HCHO on cartridge, i.
MW = molecular weight of HCHO, 30.03 g/mole.
R = gas constant, 0.082 L-atm/mol-deg.
T_{AMB} = ambient air temperature in degrees Kelvin, 273 + T (C°).
P_{AMB} = ambient air pressure in torr.

For an ambient air temperature of 25°C and a pressure of 760 torr, the ideal law equation reduces to:

$$V_{HCHO_i} = 1.2276 \times M_{HCHO_i}$$

In this equation, the HCHO mass in ng is converted to a volume in nL. The volume of air that was passed through the cartridge was measured by either a mass flow controller or dry test meter calibrated at a known temperature and pressure. To determine HCHO concentration in the units of ppbv, apply the following equation:

$$C_{HCHO}\ ppbv = \frac{V_{HCHO_i}}{V_{AIR}}$$

where:

V_{HCHOi} = volume of formaldehyde in nL
V_{AIR} = volume of sample air through the cartridge

13. Performance Criterial and Quality Assurance

This section summarizes required quality assurance measures and provides guidance concerning performance criteria that should be achieved within each laboratory.

13.1 Standard Operating Procedures (SOPs).

13.1.1 Users should generate SOPs describing the following activities in their laboratory: (1) assembly, calibration, and operation of the sampling system, with make and model of equipment used; (2) preparation, purification, storage, and handling of sampling reagent and samples; (3) assembly, calibration, and operation of the HPLC system, with make and model of equipment used; and (4) all aspects of data recording and processing including lists of computer hardware and software used.

13.1.2 SOPs should provide specific stepwise instructions and should be readily available to and understood by the laboratory personnel conducting the work.

13.2 HPLC System Performance

13.2.1 The general appearance of the HPLC system should be similar to that illustrated in Figure 1.

13.2.2 HPLC system efficiency is calculated according to the following equation:

$$N = 5.54 \left(\frac{t_r}{W_{1/2}} \right)^2$$

where:

N = column efficiency, theoretical plates.
t_r = retention time of analyte, seconds.
$W_{1/2}$ = width of component peak at half height, seconds.

A column efficiency of >5,000 theoretical plates should be utilized.

13.2.3 Precision of response for replicate HPLC injections should be ±10% or less, day to day, for analyte calibration standards at 150 ng/mL or greater levels (as the carbonyl compound). At 75 ng/mL levels and below, precision of replicate analyses could vary up to 25%. Precision of retention times should be ±7% on a given day.

13.3 Process Blanks

13.3.1 At least one field blank should be used for each day of field sampling, shipped and analyzed with each group of samples. The number of samples within a group and/or time frame should be recorded so that a specified minimum number of blanks is obtained for a given cartridge lot used for field samples. The field blank is treated identically to the samples except that no air is drawn through the cartridge. The performance criteria described in Section 9.2 should be met for field blanks. It is also desirable to analyze trip and laboratory blank cartridges as well, to distinguish between possible field and lab contamination.

[Note: Remember to use the field blank value for each cartridge lot when calculating concentration. Do not mix cartridge lots in the blank value determinations]

13.4 Method Precision and Accuracy

13.4.1 At least 50% of the sampling events should include a collocated sample. A collocated sample is defined as a second sampling port off the common sampling manifold. If more than five samples are collected per sampling event, a collocated sample should be collected for each sampling event. Precision for the collocated samples should be ±20% or better. EPA historical data has demonstrated effectiveness in reaching ±20%, as illustrated in Figure 13.

13.4.2 Precision for replicate HPLC injections should be ±10% or better, day to day, for calibration standards.

13.4.3 Cartridges spiked with analytes of interest can be used in round-robin studies to intercompare several laboratories performing carbonyl analyses. The spiked samples are prepared in the laboratory by spiking a blank cartridge with a solution of derivatized carbonyls in acetonitrile. The laboratory preparing the spike samples should analyze at a minimum 3 of the prepared spiked samples to evaluate the consistency of prepared samples.

13.4.4 Before initial use of the method, each laboratory should generate triplicate spiked samples at a minimum of three concentration levels, bracketing the range of interest for each compound. Triplicate nonspiked samples must also be processed. Spike recoveries of >80 ±10% and blank levels should be achieved.

13.4.5 For ambient air sampling, an ozone denuder must be used as part of the sampling system. As discussed in Section 6.4, ozone effects the ultimate method precision and accuracy by reacting with its carbonyl derivative (hydrazones) on the cartridge. To illustrate this point, Figure 14 documents the concentration of formaldehyde captured on collocated DNPH-cartridges, one with a denuder (see Figure 14a) and the other without a denuder (see Figure 14b). The formaldehyde peak is considerably higher with use of an ozone denuder.

13.5 Method Detection Limits

13.5.1 Determine method detection limits using the procedures in 40 CFR Part 136B. Prepare a low level standard of the carbonyl derivatives at a concentration within two to five times the estimated method detection limit. Inject the standard into the analytical system seven times.

13.5.2 Calculate the measured concentration using the calibration curve.

13.5.3 Determine the standard deviation for the seven analyses and use the standard deviation to calculate the detection limit as described in 40 CFR Part 136B.

13.6 General QA/QC Requirements

13.6.1 General QA/QC requirements associated with the performance of Compendium Method TO-11A include:

Sampling

- Each sampling event, flow calibration with bubble meter, both pre- and post-checks.
- Mass flow meter calibration factor determined every quarter.
- Each sampling event, leak check, both pre- and post-checks.
- 10 percent of field samples collocated to help calculate method precision and evaluate biases.
- 10 percent of field samples operated with back-up cartridge to evaluate analyte breakthrough.
- Field and trip (optional) blank cartridges are included with each field sample collection program.
- Sample volumes calculated and reviewed project QA officer.

Reagents

- Coating solution prepared from concentrated stock solution immediately before each coating.

- Solution analyzed before each coating to determine acceptability (less than 0.15 µg/cartridge for each aldehyde), control chart of contaminant concentration maintained.
- Three blank cartridges per lot for immediate elution/analysis to determine Certification Blank for the carbonyl compounds.

Analysis

- Multi point calibration curve performed each six months.
- Each initial calibration verified with a standard from a second source.
- Continuing calibration standard (mid-level) analyses every analytical run to evaluate precision, peak resolution and retention time drift.
- Method detection limits (MDLs) verified annually or after each instrument change.
- Replicate analysis of approximately 10 percent of sample eluents to evaluate precision.
- Samples quantitated against least squares calibration line.
- Performance evaluation (PE) sample acquired from independent sources analyzed prior to and after field samples.
- Random collocated samples shipped to independent laboratory for analysis and compared to in-house collocated sample.
- Testing of acetonitrile used for sample extraction for background carbonyl evaluation.

Data Acquisition

- Sample chromatograms and standards checked daily for peak shape and integration quality, resolution of carbonyls, overall sensitivity and retention time drift.
- Separate tape backups made of raw data immediately after completion of each analysis.
- Peaks in each sample checked for correct ID and integration using system software before export to ASCII file.
- Final results checked and edited by project QA officer before producing final report.
- Tape backups of final data files produced.

13.6.2 All results should be reviewed by the project QA officer, independent of the field and laboratory operations, to evaluate the overall adherence to the methodology in meeting the program data quality objectives (DQOs).

14. Detection of Other Aldehydes and Ketones

14.1 Introduction

14.1.1 The procedure outlined above has been written specifically for the sampling and analysis of formaldehyde in ambient air using an adsorbent cartridge and HPLC. Ambient air contains other aldehydes and ketones. Optimizing chromatographic conditions by using two Zorbax ODS columns in series and varying the mobile phase composition through a gradient program will enable the analysis of other aldehydes and ketones. Alternatively, other aldehydes and ketones may also be analyzed using a single C-18, reverse phase column and a ternary gradient as described by Waters or Smith, et al. (*J. Chromatography*, 483, 1989, 431-436). Thus, other aldehydes and ketones can be detected with a modification of the basic procedure.

14.1.2 In particular, chromatographic conditions can be optimized to separate acetaldehyde, acetone, propionaldehyde, and some higher molecular weight carbonyls within an analysis time of about 1 h by utilizing two Zorbax ODS columns in series, and a linear mobile phase program. Operating the HPLC in a gradient mode with one Zorbax ODS column may also provide adequate resolution and separation. Carbonyl compounds covered within the scope of this modification include:

Formaldehyde	Crotonaldehyde	
o-Tolualdehyde		
Aceteldehyde	Butyraldehyde	
m-Tolualdehyde		
Acetone	Benzaldehyde	
p-Tolualdehyde		
Propionaldehdye	Isovaleraldehyde	
Hexanaldehyde		
Valeraldehyde	2,5-Dimethylbenzaldehyde	Methyl ethyl ketone

14.1.3 The linear gradient program varies the mobile phase composition periodically to achieve maximum resolution of the C-3, C-4 and benzaldehyde region of the chromatogram. The following gradient program was found to be adequate to achieve this goal: Upon sample injection, linear gradient from 65% acetonitrile (ACN)/35% water to 55% ACN/45% water in 36 min; to 100% ACN in 20 min; 100% ACN for 5 min; reverse linear gradient from 100% ACN to 60% ACN/40% water in 1 min; maintain at 60% ACN/40% water for 15 min.

14.2 Sampling Procedures

Same as Section 10.

14.3 HPLC Analysis

14.3.1 The HPLC system is assembled and calibrated as described in Section 11. The operating parameters are as follows:

Column:	Zorbax ODS, two columns in series
Mobile Phase:	Acetonitrile/water, linear gradient
Step 1.	60-75% acetonitrile/40-25% water in 30 minutes.
Step 2.	75-100% acetonitrile/25-0% water in 20 minutes.
Step 3.	100% acetonitrile for 5 minutes.
Step 4.	60% acetonitrile/40% water reverse gradient in 1 minute.
Step 5.	60% acetonitrile/40% water, isocratic, for 15 minutes.
Detector:	Ultraviolet, operating at 360 nm
Flow Rate:	1.0 mL/min
Sample Injection Volume:	25 µL

14.3.2 The gradient program allows for optimization of chromatographic conditions to separate acetaldehyde, acetone, propionaldehyde, and other higher molecular weight aldehydes and ketones in an analysis time of about one hour.

14.3.3 The chromatographic conditions described here have been optimized for a gradient HPLC system equipped with a UV detector (variable wavelength), an automatic sampler with a 25-µL loop injector and two DuPont Zorbax ODS columns (4.6 x 250-mm), a recorder, and an electronic integrator. Analysts are advised to experiment with their HPLC systems to optimize chromatographic conditions for their particular analytical needs. Highest chromatographic resolution and sensitivity are desirable but may not be achieved. The separation of acetaldehyde, acetone, and propionaldehyde should be a minimum goal of the optimization.

14.3.4 The carbonyl compounds in the sample are identified and quantified by comparing their retention times and area counts with those of standard DNPH derivatives. Formaldehyde, acetaldehyde, acetone, propionaldehyde, crotonaldehyde, benzaldehyde, and o-, m-, p-tolualdehydes can be identified with a high degree of confidence. The

identification of butyraldehyde is less certain because it coelutes with isobutyraldehyde and is only partially resolved from methyl ethyl ketone under the stated chromatographic conditions. A typical chromatogram obtained with the gradient HPLC system for detection of other aldehydes and ketones is illustrated in Figure 15.

14.3.5 The concentrations of individual carbonyl compounds are determined as outlined in Section 12.

14.3.6 Performance criteria and quality assurance activities should meet those requirements outlined in Section 13.

15. Precision and Bias

15.1 This test method has been evaluated by round robin testing. It has also been used by two different laboratories for analysis of over 1,500 measurements of formaldehyde and other aldehydes in ambient air for EPA's Urban Air Toxics Program (UATP), conducted in 14 cities throughout the United States.

15.2 The precision of 45 replicate HPLC injections of a stock solution of formaldehyde-DNPH derivative over a 2-month period has been shown to be 0.85% relative standard deviation (RSD).

15.3 Triplicate analyses of each of twelve identical samples of exposed DNPH cartridges provided formaldehyde measurements that agreed within 10.9% RSD.

15.4 A total of 16 laboratories in the U.S., Canada, and Europe participated in a round robin test that included 250 blank DNPH-cartridges, three sets of 30 cartridges spiked at three levels with DNPH derivatives, and 13 sets of cartridges exposed to diluted automobile exhaust gas. All round robin samples were randomly distributed to the participating laboratories. A summary of the round robin results is shown in Table 4.

15.5 The absolute percent differences between collocated duplicate sample sets from the 1988 UATP program were 11.8% for formaldehyde (n=405), 14.5% for acetaldehyde (n=386), and 16.7% for acetone (n=346).

15.6 Collocated duplicate samples collected in the 1989 UATP program and analyzed by a different laboratory showed a mean RSD of 0.07, correlation coefficient of 0.98, and bias of -0.05 for formaldehyde. Corresponding values for acetaldehyde were 0.12, 0.95 and -0.54, respectively. In the 1988 UATP program, single laboratory analyses of spiked DNPH cartridges provided over the year showed an average bias of +6.2% for formaldehyde (n=14) and +13.8% for acetaldehyde (n=13).

15.7 Single laboratory analyses of 30 spiked DNPH cartridges during the 1989 UATP program showed an average bias of +1.0% (range -49 to +28%) for formaldehyde and 5.1% (range -38% to +39%) for acetaldehyde.

16. References

1. Riggin, R. M., "Determination of Aldehydes and Ketones in Ambient Air: Method TO-5," in *Compendium of Methods for the Determination of Toxic Organic Compounds in Ambient Air*, U. S. Environmental Protection Agency, EPA-600/4-84-041, Research Triangle Park, NC, April 1984.

2. Winberry, W. T. Jr., et al., "Determination of Formaldehyde and Other Aldehydes in Indoor Air Using Passive Sampling Device, Method IP-6C," in *Compendium of Methods for the Determination of Air Pollutants in Indoor Air*, U. S. Environmental Protection Agency, EPA-600/4-90-010, May 1990.

3. Tejada, S.B., *"Standard Operating Procedure For DNPH-coated Silica Cartridges For Sampling Carbonyl Compounds In Air And Analysis by High-performance Liquid Chromatography,"* Unpublished, U. S. Environmental Protection Agency, Research Triangle Park, NC, March 1986.

4. Tejada, S.B., "Evaluation of Silica Gel Cartridges Coated *in situ* with Acidified 2,4-Dinitrophenylhydrazine for Sampling Aldehydes and Ketones in Air," *Intern. J. Environ. Anal. Chem.*, Vol. 26:167-185, 1986.

5. Winberry, W. T. Jr., et al., "Determination of Formaldehyde in Ambient Air Using Adsorbent Cartridge Followed by HPLC: Method TO-11," in *Compendium of Methods for the Determination of Toxic Organic Compounds in Ambient Air, Second Supplement*, U. S. Environmental Protection Agency, EPA-600/4-89-018, Research Triangle Park, NC, March 1989.

6. Winberry, W. T. Jr., et al., "Determination of Formaldehyde and Other Aldehydes in Indoor Air Using a Solid Adsorbent Cartridge: Method IP-6A," in *Compendium of Methods for the Determination of Air Pollutants in Indoor Air*, U. S. Environmental Protection Agency, EPA-600/4-90-010, May 1990.

7. Nolan, L., et al., "Monitoring Carbonyls in Ambient Air Using the New Supelclean™ LPD (Low Pressure Drop) DNPH Cartridge," in *Proceedings of the 1995 EPA/AWMA International Symposium on Measurement of Toxic and Related Air Pollutants*, VIP-50, pp. 279, May 1995.

8. *Quality Assurance Handbook for Air Pollution Measurement Systems, Volume II - Ambient Air Specific Methods*, EPA-600/R-94-038b, U. S. Environmental Protection Agency, Research Triangle Park, NC, May 1994.

9. *Technical Assistance Document for Sampling and Analysis of O_3 Precursors*, U. S. Environmental Protection Agency, EPA-600/8-9-215, Research Triangle Park, NC, October 1991.

10. Ahonen, I., Priha, E., and Aijala, M-L, "Specificity of Analytical Methods Used to Determine the Concentration of Formaldehyde in Workroom Air," *Chemosphere*, Vol. 13:521-525, 1984.

11. Levin, J. O., et al., "Determination of Sub-part-per-Million Levels of Formaldehyde in Air Using Active or Passive Sampling on 2,4-Dinitrophenylhydrazine-Coated Glass Fiber Filters and High-Performance Liquid Chromatography," *Anal. Chem.*, Vol. 57:1032-1035, 1985.

12. Perez, J. M., Lipari, F., and Seizinger, D. E., "Cooperative Development of Analytical Methods for Diesel Emissions and Particulates - Solvent Extractions, Aldehydes and Sulfate Methods", presented at the *Society of Automotive Engineers International Congress and Exposition*, Detroit, MI, February-March 1984.

13. Kring, E. V., et al., "Sampling for Formaldehyde in Workplace and Ambient Air Environments-Additional Laboratory Validation and Field Verification of a Passive Air Monitoring Device Compared with Conventional Sampling Methods," *J. Am. Ind. Hyg. Assoc.*, Vol. 45:318-324, 1984.

14. Sirju, A., and Shepson, P. B., "Laboratory and Field Evaluation of the DNPH-Cartridge Technique for the Measurement of Atmospheric Carbonyl Compounds," *Environ. Sci. Technol.* Vol. 29:384-392, 1995.

15. Chasz, E. et al., "Philadelphia Air Management Lab, Summary of Procedures and Analytical Data for Enhanced Ambient Monitoring of PAMS Carbonyls," in *Proceedings of the 1995 EPA/AWMA International Symposium on Measurement of Toxic and Related Air Pollutants*, VIP-50, pp. 293, May 1995.

16. Grosjean, D., "Ambient Levels of Formaldehyde, Acetaldehyde, and Formic Acid in Southern California: Results of a One-Year Base-Line Study," *Environ. Sci. Technol.*, Vol. 25, 710-715, 1991.

17. Bufalini, J.J., and Brubaker, K.L., "The Photooxidation of Formaldehyde at Low Pressures." In: *Chemical Reaction in Urban Atmospheres*, (C.S. Tuesday), American Elsevier Publishing Co., New York, pp. 225-240. 1971.

18. Altshuller, A.P., and Cohen, I.R., "Photooxidation of Formaldehyde in the Pressence of Aliphatic Aldehydes", *Science*, Vol. 7:1043-1049, 1963.

19. "*Formaldehyde and Other Aldehydes*," Committee on Aldehydes, Board of Toxicology and Environmental Hazards, National Research Council, National Academy Press, Washington, DC, 1981.

20. Altshuller, A. P., "Production of Aldehydes as Primary Emissions and Secondary Atmospheric Reactions of Alkenes and Alkanes During the Night and Early Morning Hours," *Atmos. Environ.*, Vol. 27A:21-31, 1993.

21. Tanner, R. L., et al., "Atmospheric Chemistry of Aldehydes; Enhanced PAN Formation From Ethanol Fuel Vehicles," *Environ. Sci. Technol.*, Vol. 22:1026-1034, 1988.

22. Ciccioli, P., and Cecinato, A., "Advanced methods for the Evaluation of Atmospheric Pollutants Relevant to Photochemical Smog and Dry Acid Deposition: Chapter 11" in *Gaseous Pollutants: Characterization and Cycling*, edited by Jerome O. Nriagu, ISBN 0-471-54898-7, John Wiley and Sons, Inc., 1992.

23. Parmar, S. S., et al., "A Study of Ozone Interferences in Carbonyl Monitoring Using DNPH Coated C_{18} and Silica Cartridges," in *Proceedings of the 1995 EPA/AWMA International Symposium on Measurement of Toxic and Related Air Pollutants*, VIP-50, pp. 306, May 1995.

24. Parmar, S. S., et al., "Effect of Acidity on the Sampling and analysis of Carbonyls Using DNPH Derivatization Method," in *Proceedings of the 1996 EPA/AWMA International Symposium on Measurement of Toxic and Related Air Pollutants*, VIP-64, pp. 311, May 1996.

25. Arnts, R. R., and Tejada, S. B., "2,4-Dinitrophenylhydrazine-Coated Silica Gel Cartridge Method for Determination of Formaldehyde in Air: Identification of an Ozone Interference," *Environ. Sci. Technol.* Vol. 23:1428-1430, 1989.

26. Kleindienst, T. E., et al., "Measurement of C_1-C_4 Carbonyls on DNPH-Coated Silica Gel and C_{18} Cartridges in the Presence of Ozone," in *Proceedings of the 1995 EPA/AWMA International Symposium on Measurement of Toxic and Related Air Pollutants*, VIP-50, pp 29T, May 1995.

TABLE 1. COMPARISON OF DNPH COATED CARTRIDGES: SILICA GEL VS. C18

Topic	Comparison	Discussion
Background	Silica gel < C18	Silica gel is purer, therefore less background contamination from acetone and formaldehyde as compared to C18.
Breakthrough	Silica gel < C18	C18 allows carbonyl compounds to breakthrough easier with longer sampling periods, thus causing bias results. C18 has a lower capacity for carbonyls in general. Loading of DNPH on C18 plays an important role in breakthrough for carbonyls.
Ozone interference	Silica gel C18	Ozone interference with silica gel is documented. Ozone interference with C18 is not clear at this time. Therefore, must use denuder with both systems.
Extraneous chromato-graphic peaks	Silica gel C18	Researchers have detected extraneous peaks in the chromatography of both C18 and silica gel when ozone is present.

TABLE 2. TYPICAL DNPH-CARTRIDGE SPECIFICATIONS

Category	Typical Specifications
Adsorbent	chromatographic grade silica or C18 coated with 2,4-dinitrophenylhydrazine (DNPH)
Particle size	150-1000 µm (60/100 mesh to 18/35 mesh)
DNPH loading[1]	0.3-0.9% (~1-3 mg/cartridge)
Bed weight[2]	approx. 350 mg
Capacity	approx. 75 µg formaldehyde, assuming a 50% consumption of DNPH
Background (per cartridge)	<0.15 µg formaldehyde <0.10 µg acetaldehyde <0.10 µg other carbonyls <0.30 µg acetone
Pressure drop	7 inches of water @ 0.5 L/min 15 inches of water @ 1.0 L/min 37 inches of water @ 2.0 L/min
Sampling temperature	10°C to 100°C
Collection efficiency	>95% for formaldehyde for sampling rates up to 2.0 L/min
Solvent hold-up volume	~1.0 mL
Tube dimensions	From ~2 inches to ~5 inches in length ~1 inch O.D. at widest point

[1]Loading is variable among commercial suppliers.
[2]The SKC tube is a dual bed cartridge with 300 mg of DNPH-coated silica gel in the front bed and 150 mg of DNPH-coated silica gel in the back bed.

TABLE 3. EQUIVALENT FORMALDEHYDE CONCENTRATION (ppbv) RELATED TO BACKGROUND FORMALDEHYDE CONCENTRATION (ng/cartridge)

		Sample volume, L			
Equivalent formaldehyde concentration (ppbv)		**60**	**120**	**180**	**1440**
formaldehyde cartridge concentration ng/cartridge	70	0.950	0.475	0.317	0.040
	100	1.358	0.679	0.453	0.057
	150	2.037	1.018	0.679	0.085

TABLE 4. ROUND ROBIN TEST RESULTS[a]

Sample Type	Formaldehyde	Acetaldehyde	Propionaldehyde	Benzaldehyde
Blank cartridges:				
µg aldehyde	0.13	0.18	0.12	0.06
(% RSD)	46	70	47	44
n	33	33	23	8
Spiked[b] cartridges:				
% recovery (% RSD)				
low				
medium	89.0 (6.02)	92.6 (13.8)	108.7 (32.6)	114.7 (36.1)
high	97.2 (3.56)	97.8 (7.98)	100.9 (13.2)	123.5 (10.4)
n	97.5 (2.15)	102.2 (6.93)	100.1 (6.77)	120.0 (8.21)
	12	13	12	14
Exhaust samples:				
µg aldehyde	5.926	7.990	0.522	0.288
% RSD	12.6	16.54	26.4	19.4
n	31	32	32	17

[a]Sixteen participating laboratories. Statistics shown after removal of outliers.
[b]Normal spiking levels were approximately 0.5, 5 and 10 µg of aldehyde, designated as low, medium, and high in this table.

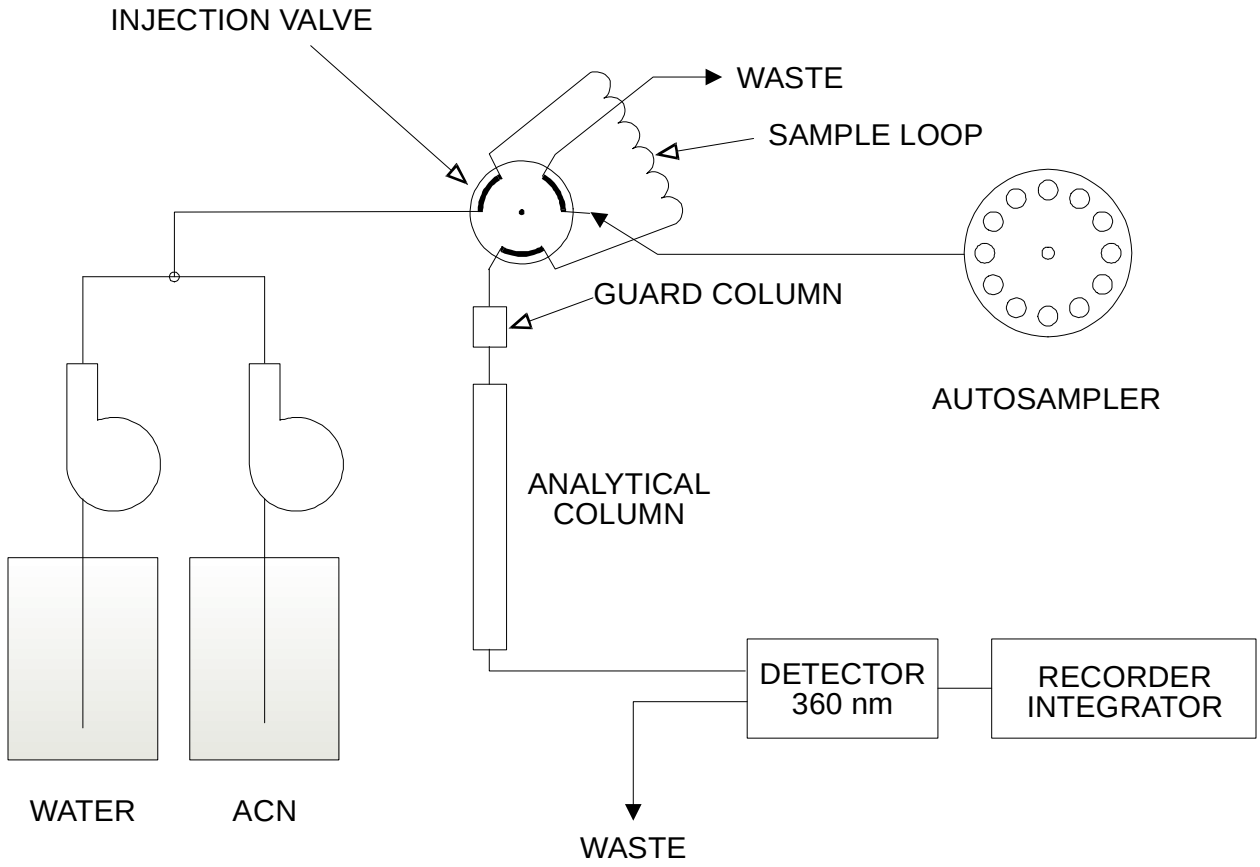

Figure 1. Basic high-performance liquid chromatographic (HPLC) system used for carbonyl analysis.

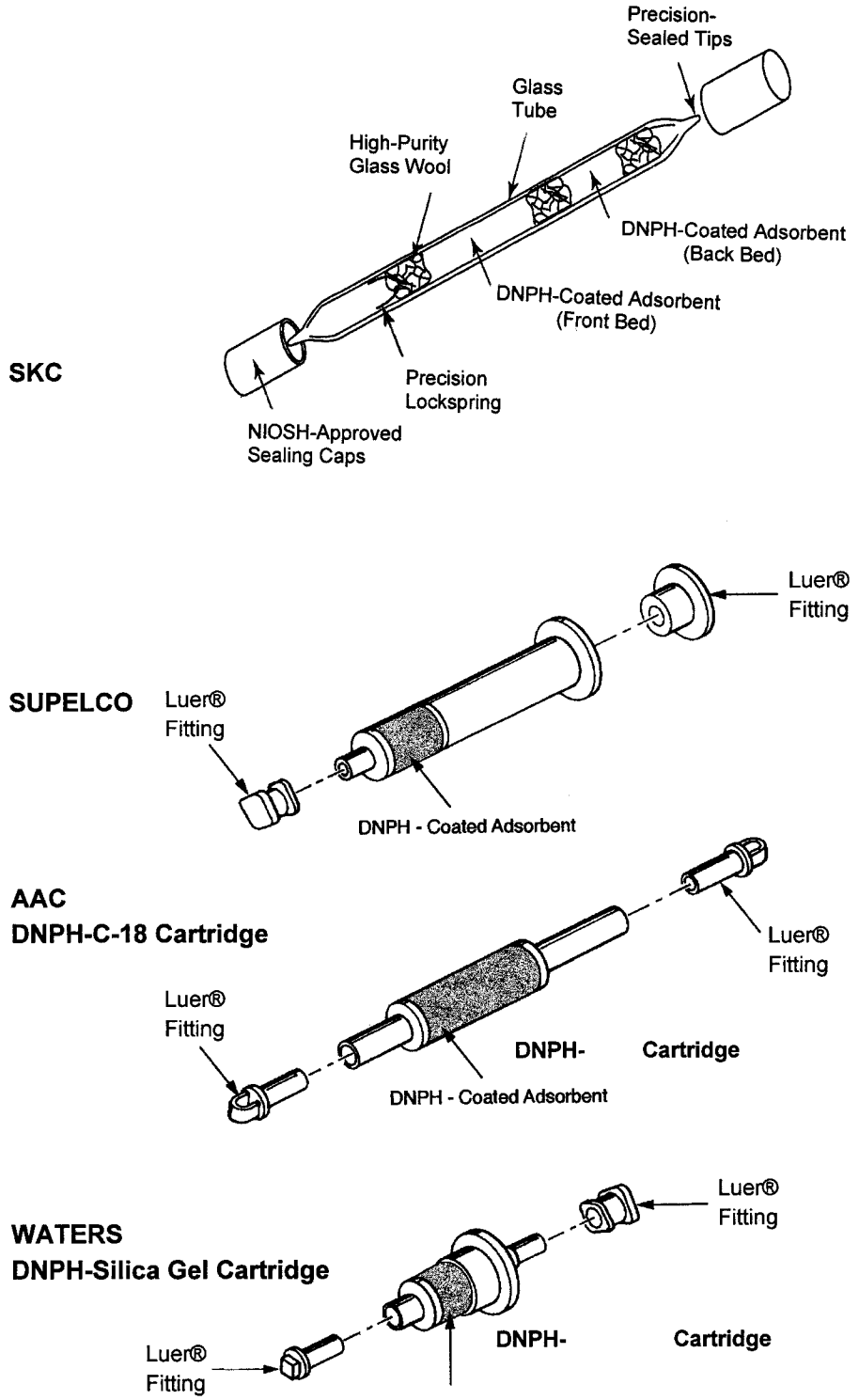

Figure 2. Example of commercially available DNPH-cartridges.

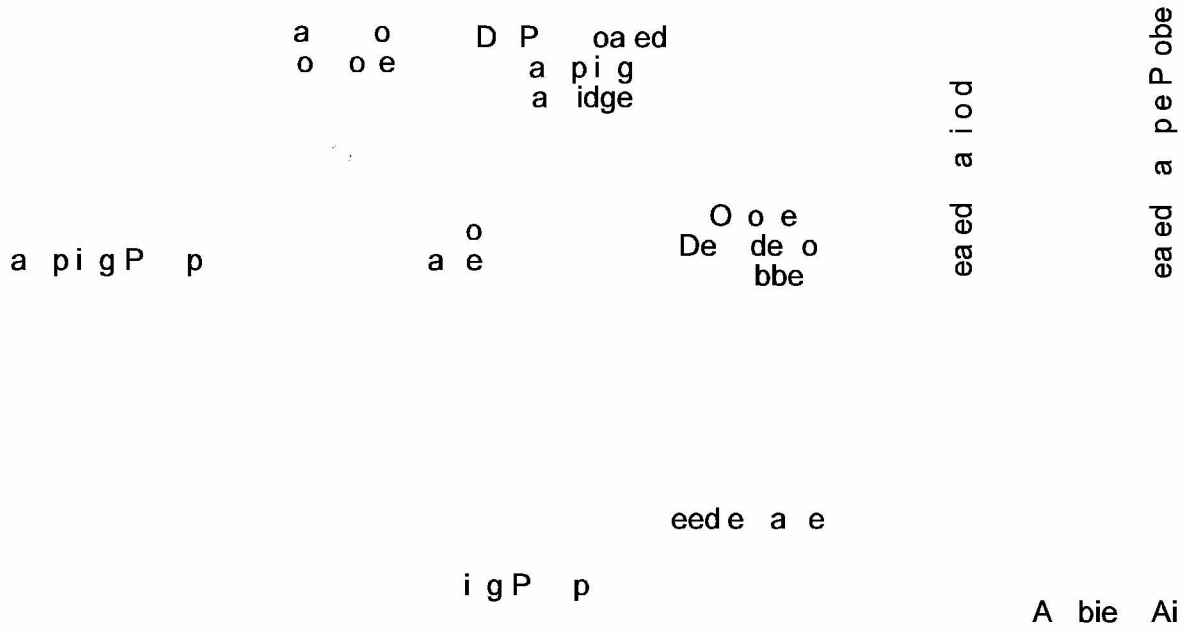

Figure 3. Example of configuration of a single-port carbonyl sampler using DNPH-coated cartridges.

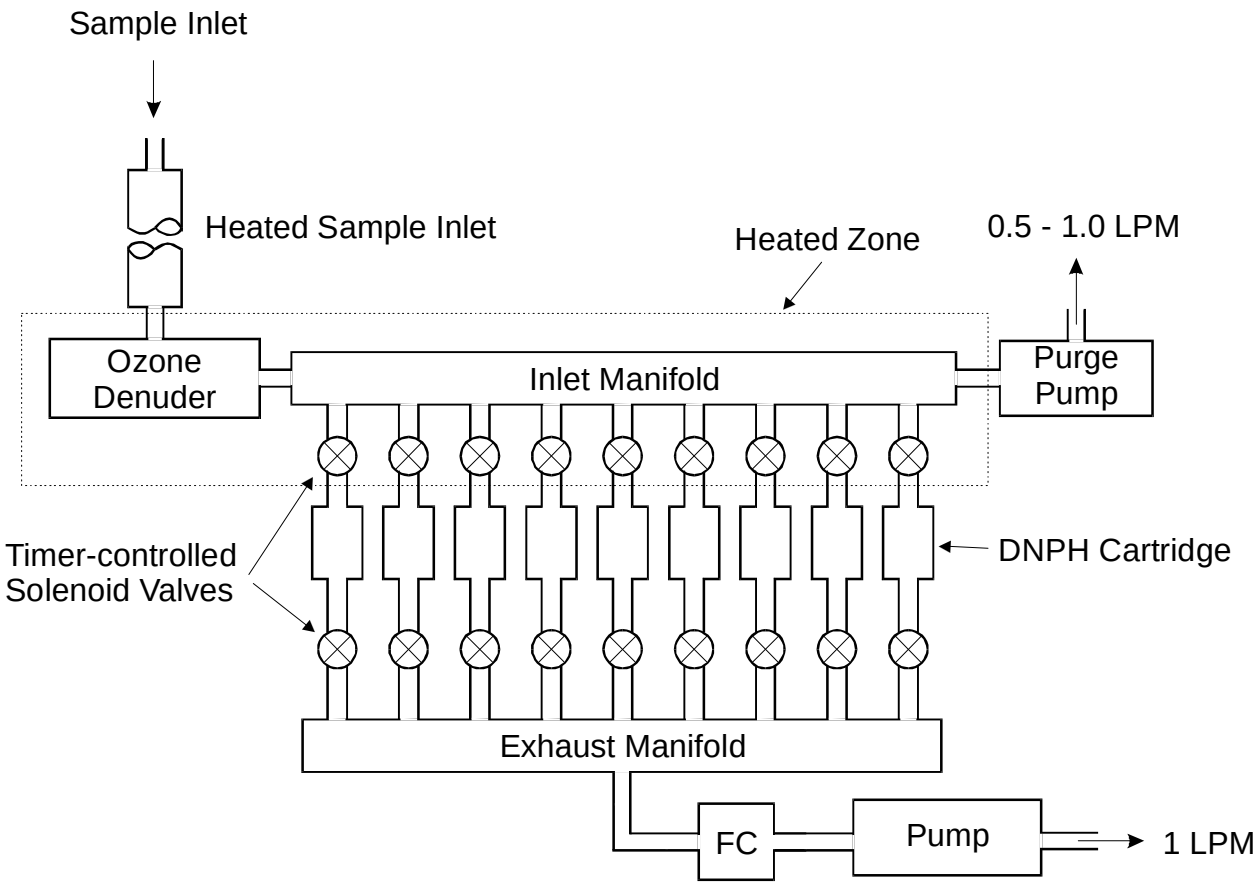

Figure 4. Example of components of an automated multi-port sampler for carbonyls monitoring using DNPH-coated cartridges.

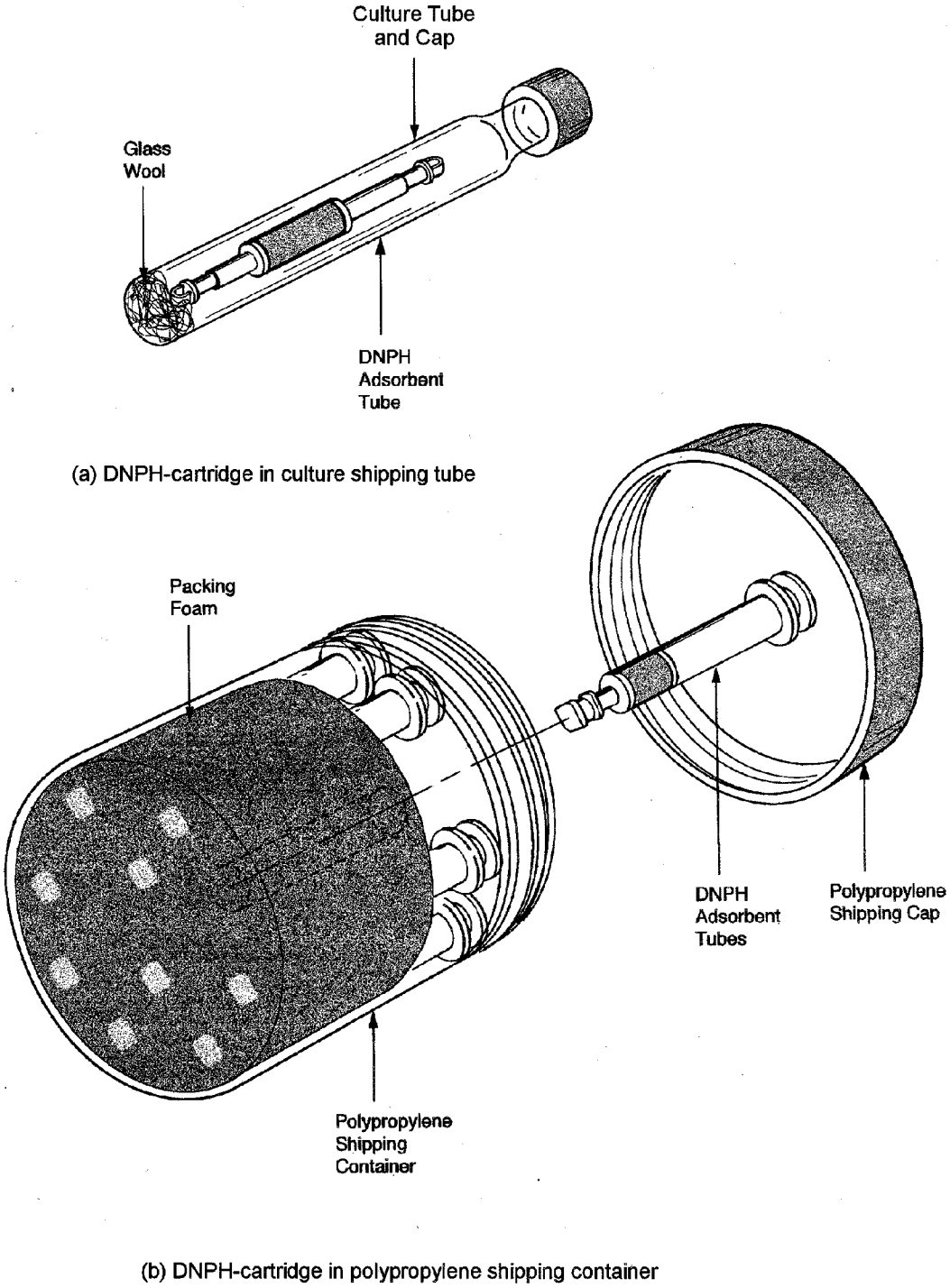

Figure 5. Example of commercially available shipping containers for DNPH cartridges.

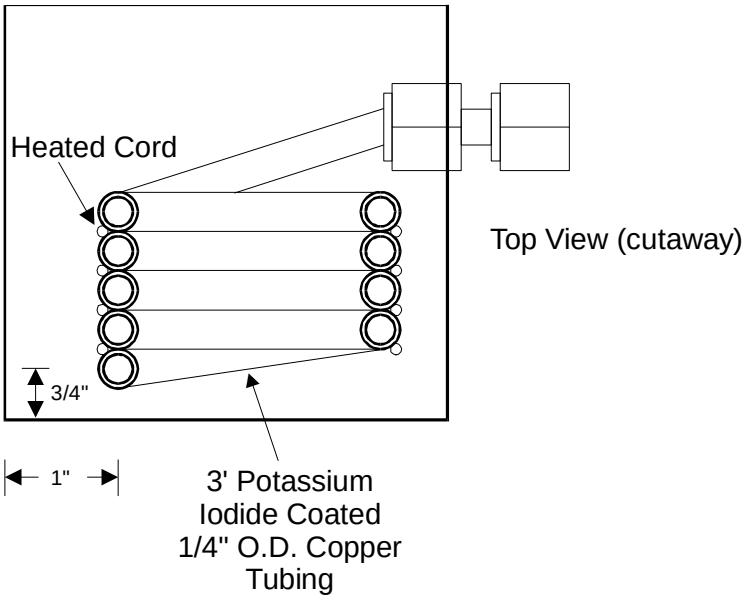

(a) Cross-sectional view of EPA's ozone denuder assembly

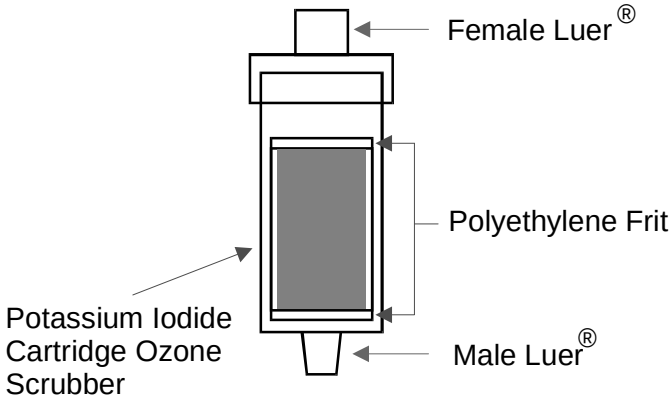

(b) Commercially available packed granular potassium iodide (KI) ozone scrubber

Figure 6. Example of (a) cross-sectional view of EPA's ozone denuder assembly, and (b) commercially available packed granular potassium iodide (KI) ozone scrubber.

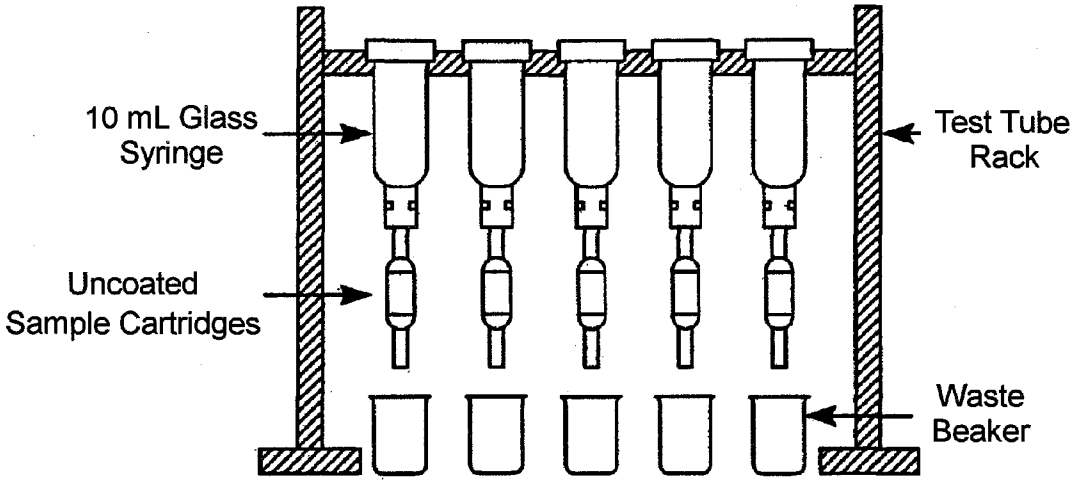

(a) Rack for Coating Cartridges

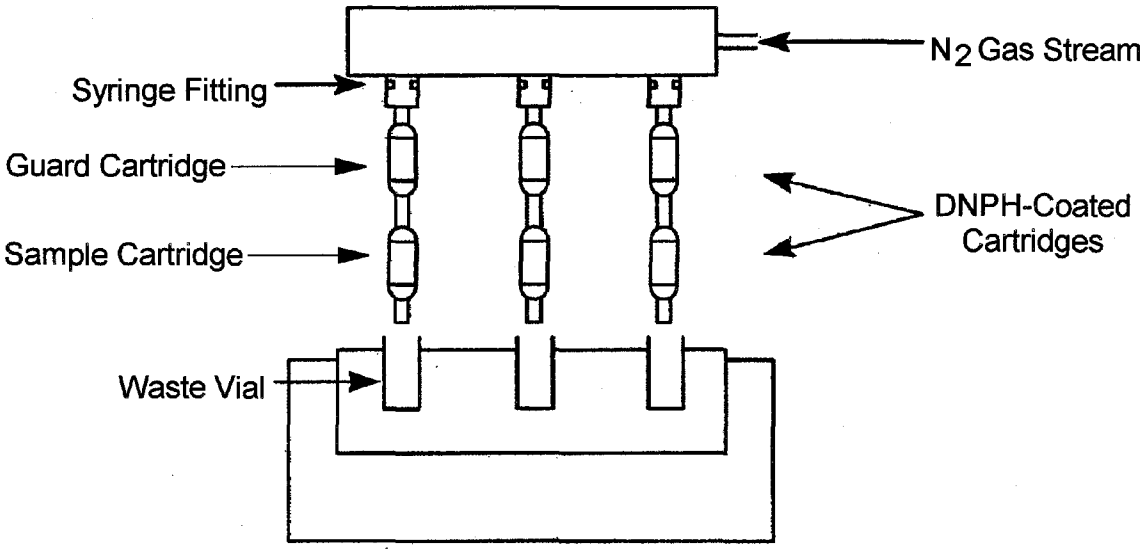

(b) Rack for Drying DNPH-Coated Cartridges

Figure 7. Example of a typical syringe rack for coating (a) and drying (b) sample cartridges.

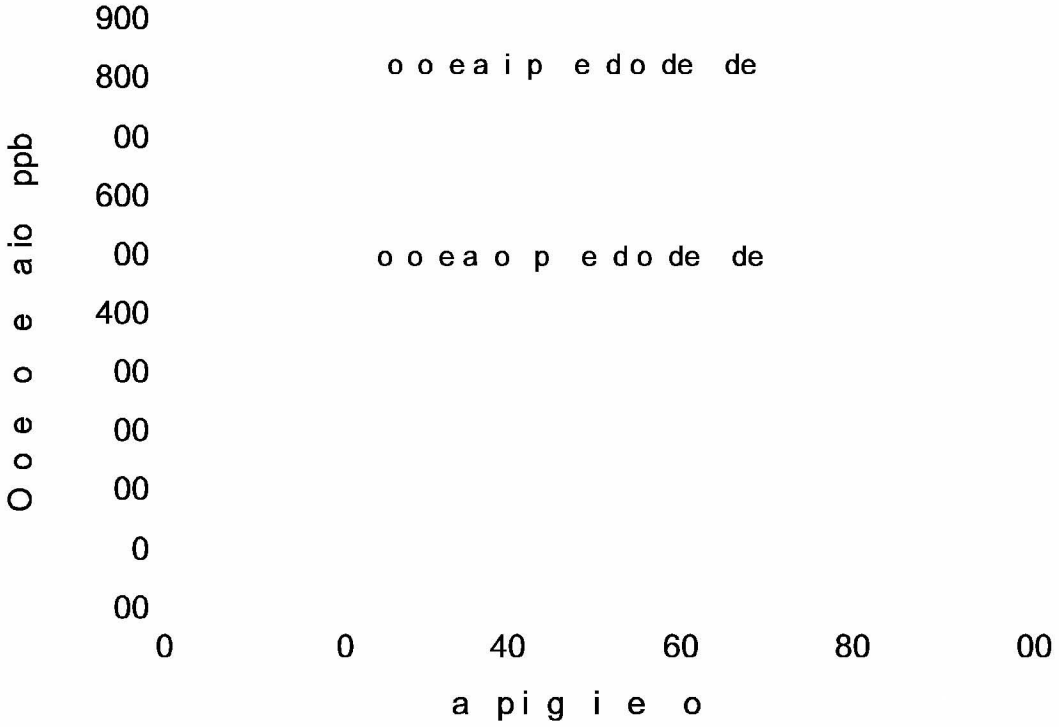

Figure 8. Example of capacity of 3' x 0.25" O.D. x 4.6-mm I.D. copper KI ozone denuder at 2 L/min flow.

COMPENDIUM METHOD TO-11A
CARBONYL SAMPLING FIELD TEST DATA SHEET
(One Sample per Data Sheet)

I. GENERAL INFORMATION

PROJECT: _____
SITE: _____
LOCATION: _____
INSTRUMENT MODEL NO.: _____
PUMP SERIAL NO.: _____
ADSORBENT CARTRIDGE INFORMATION:
Type: _____
Adsorbent: _____
Serial Number: _____
Sample Number: _____

DATES(S) SAMPLED: _____
TIME PERIOD SAMPLED: _____
OPERATOR: _____
CALIBRATED BY: _____
OZONE DENUDER USE TIME (Hr): _____
HEATED INLET: _____ YES _____ NO

II. SAMPLING DATA INFORMATION

Start Time: _____ Stop Time: _____

Time	Dry Gas Meter Reading	Rotameter Reading	Flow Rate, *QmL/min	Ambient Temperature, °C	Barometric Pressure, mm Hg	Relative Humidity, %	Comments
Avg.							

* Flow rate from rotameter or soap bubble calibrator (specify which).
Total Volume Data (V_m) (use data from dry gras meter, if available)

V_m = (Final - Initial) Dry Gas Meter Reading, or = _____ L
or

$$V_m = \frac{Q_1 + Q_2 + Q_3 \ldots Q_N}{N} \times \frac{1}{1000 \times (Sampling\ Time\ in\ Minutes)}$$ = ___ L

III. COMMENTS

_____
_____
_____

Figure 9. Example of Compendium Method TO-11A field test data sheet (FTDS).

OP RA PARA R
P

o : o ba OD o 8 RP
obi e P a e: 60% A e o i i e 40% a e
De e o : a io e ope a i g a 60
o Ra e: i
Re e io i e: i e o o a de de
a p e je io o e:

ab e Ba e i e

je

0 0 0

i

Figure 10. Example of chromatogram of DNPH-formaldehyde derivative.

OPERATING PARAMETERS HPLC

Column: Zorbax ODS or C-18 RP
Mobile Phase: 60% Acetontrile/40% Water
Detector: Ultraviolet, operating at 360 nm
Flow Rate: 1 mL/min
Retention Time: ~ 7 minutes for formaldehyde
Sample Injection Volume: 25 μL

Peak	Conc. μg/mL	Area Counts
a	0.61	226541
b	1.23	452186
c	6.16	2257271
d	12.32	4711408
e	18.48	6053812

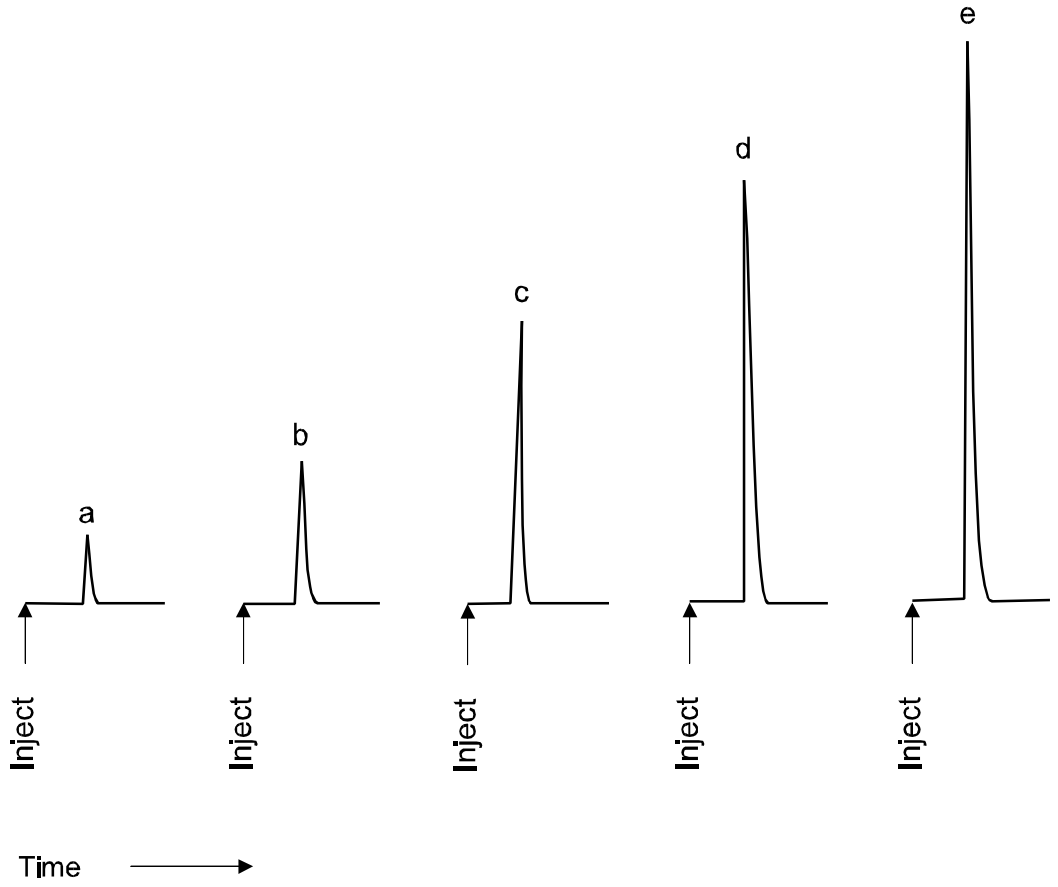

Figure 11. Example of HPLC chromatogram of varying concentration of DNPH-formaldehyde derivative.

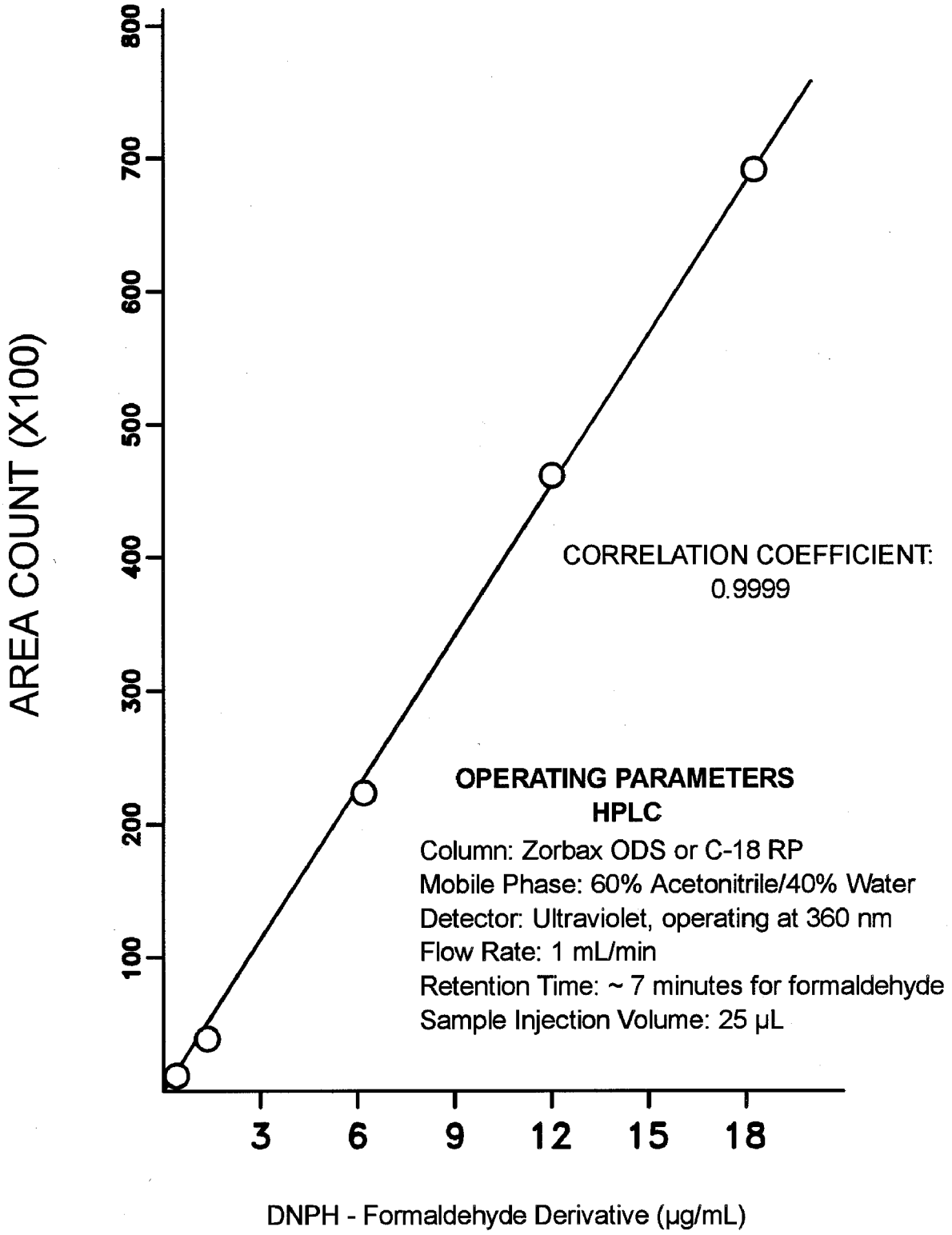

Figure 12. Example of calibration curve for formaldehyde.

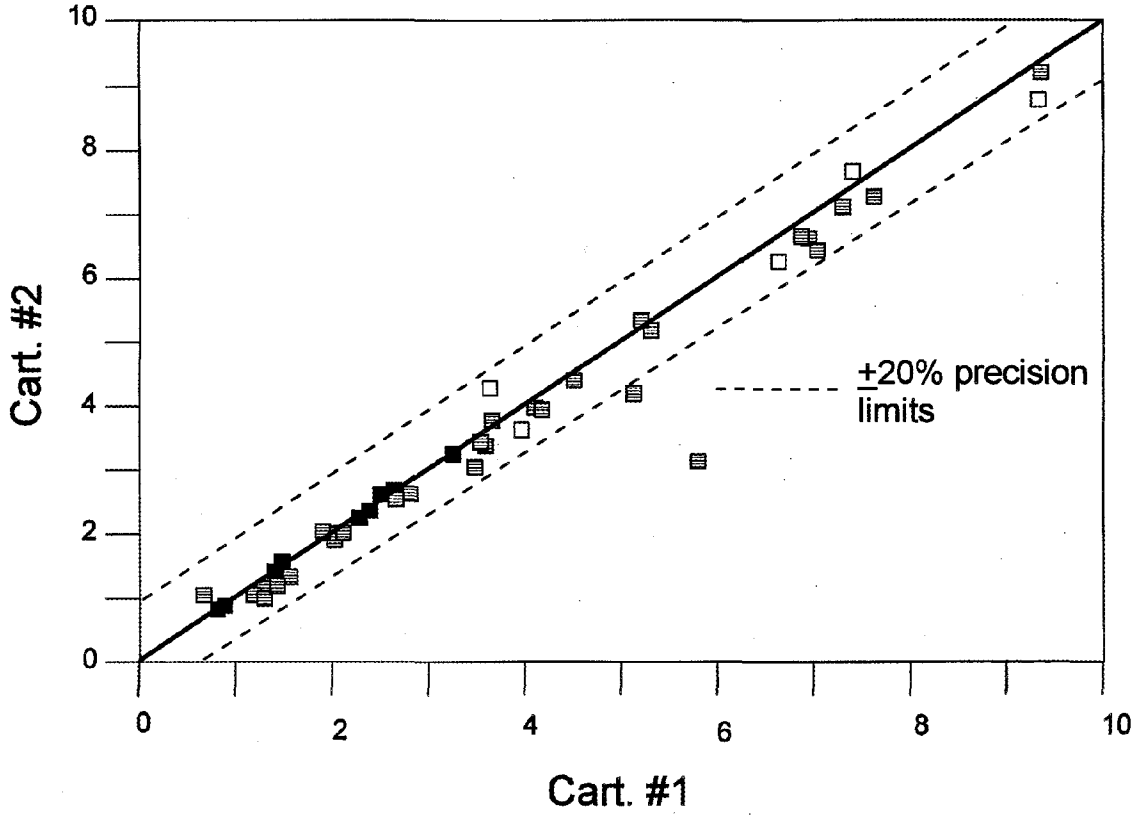

Figure 13. Historical data associated with collocated samples for formaldehyde (ppbv) in establishing 20% precision.

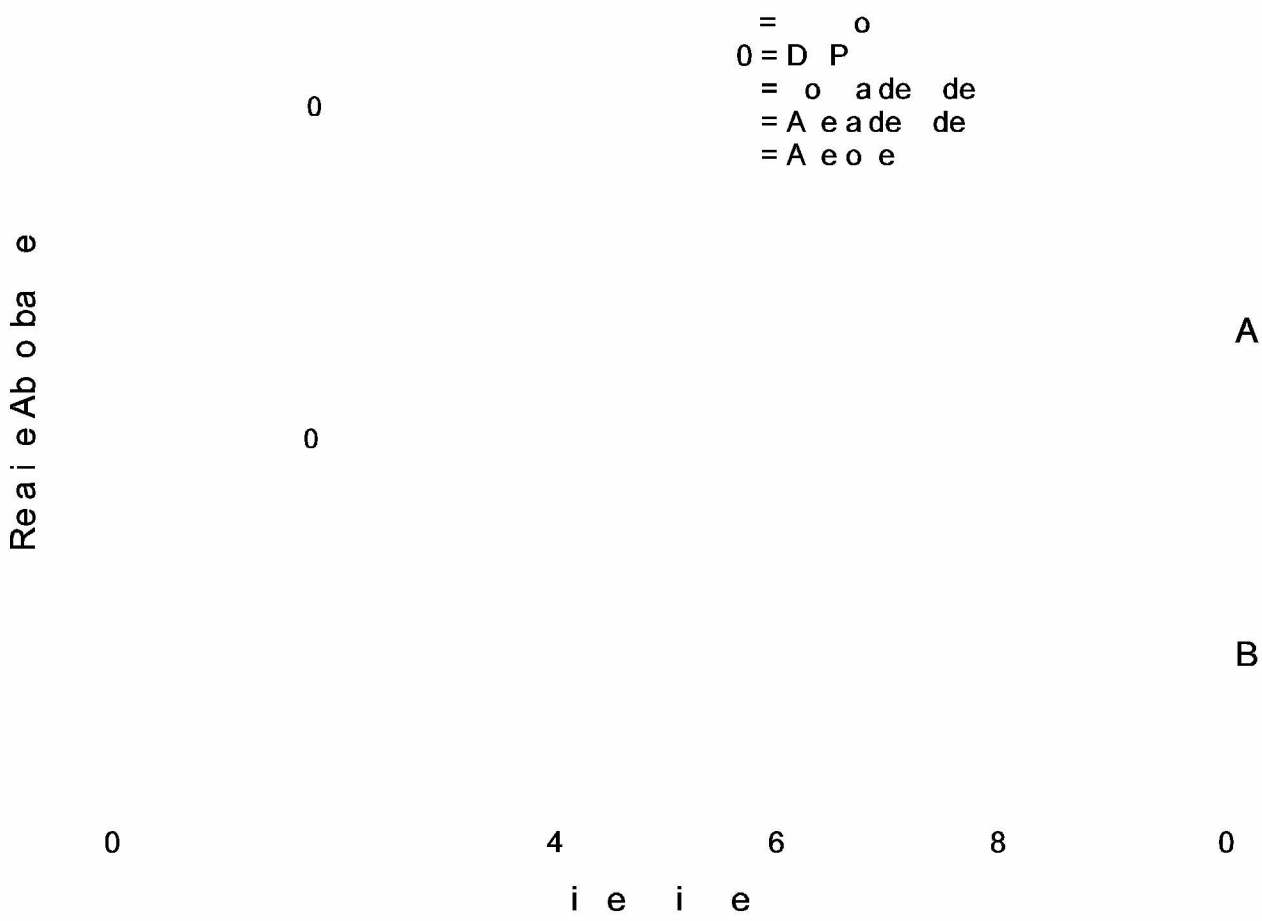

Figure 14. Example of analysis demonstrating DNPH-coated cartridges sampling air with (A) and without (B) ozone denuders, in the determination of formaldehyde.

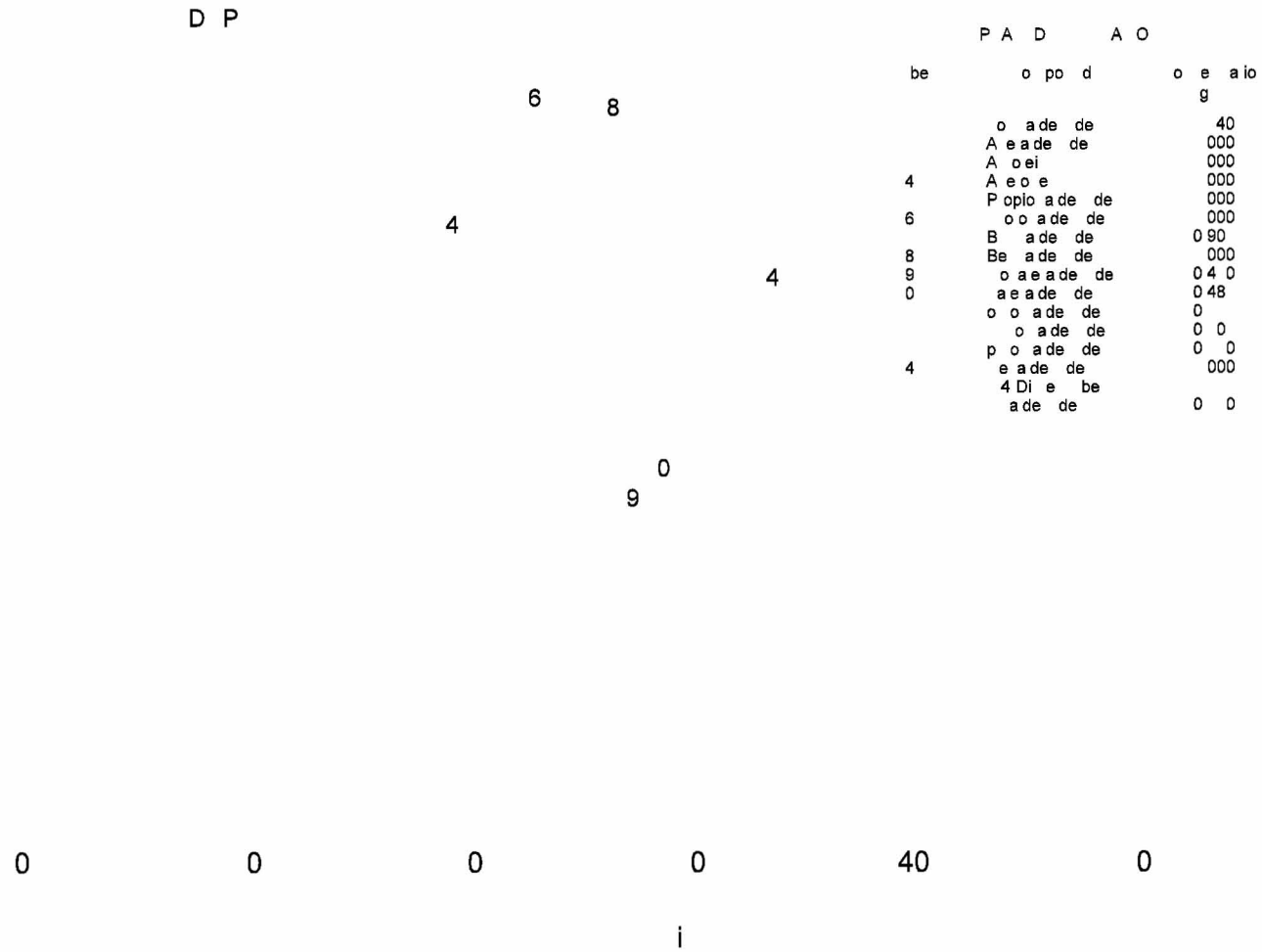

Figure 15. Typical chromatogram of a linear gradient program for analyzing other aldehydes/ketones from a DNPH-coated cartridge.

METHOD TO-12

METHOD FOR THE DETERMINATION OF NON-METHANE ORGANIC COMPOUNDS (NMOC) IN AMBIENT AIR USING CRYOGENIC PRECONCENTRATION AND DIRECT FLAME IONIZATION DETECTION (PDFID)

1. Scope

1.1 In recent years, the relationship between ambient concentrations of precursor organic compounds and subsequent downwind concentrations of ozone has been described by a variety of photochemical dispersion models. The most important application of such models is to determine the degree of control of precursor organic compounds that is necessary in an urban area to achieve compliance with applicable ambient air quality standards for ozone (1,2).

1.2 The more elaborate theoretical models generally require detailed organic species data obtained by multicomponent gas chromatography (3). The Empirical Kinetic Modeling Approach (EKMA), however, requires only the total non-methane organic compound (NMOC) concentration data; specifically, the average total NMOC concentration from 6 a.m. to 9 a.m. daily at the sampling location. The use of total NMOC concentration data in the EKMA substantially reduces the cost and complexity of the sampling and analysis system by not requiring qualitative and quantitative species identification.

1.3 Method TO1, "Method for The Determination of Volatile Organic Compounds in Ambient Air Using Tenax® Adsorption and Gas Chromatography/Mass Spectrometry (GC/MS)", employs collection of certain volatile organic compounds on Tenax® GC with subsequent analysis of thermal desorption/cryogenic preconcentration and GC/MS identification. This method (TO12) combines the same type of cryogenic concentration techniques used in Method TO1 for high sensitivity with the simple flame ionization detector (FID) of the GC for total NMOC measurements, without the GC columns and complex procedures necessary for species separation.

1.4 In a flame ionization detector, the sample is injected into a hydrogen-rich flame where the organic vapors burn producing ionized molecular fragments. The resulting ion fragments are then collected and detected. The FID is nearly a universal detector. However, the detector response varies with the species of [functional group in] the organic compound in an oxygen atmosphere. Because this method employs a helium or argon carrier

gas, the detector response is nearly one for all compounds. Thus, the historical short-coming of the FID involving varying detector response to different organic functional groups is minimized.

1.5 The method can be used either for direct, in situ ambient measurements or (more commonly) for analysis of integrated samples collected in specially treated stainless steel canisters. EKMA models generally require 3-hour integrated NMOC measurements over the 6 a.m. to 9 a.m. period and are used by State or local agencies to prepare State Implementation Plans (SIPs) for ozone control to achieve compliance with the National Ambient Air Quality Standards (NAAQS) for ozone. For direct, in situ ambient measurements, the analyst must be present during the 6 a.m. to 9 a.m. period, and repeat measurements (approximately six per hour) must be taken to obtain the 6 a.m. to 9 a.m. average NMOC concentration. The use of sample canisters allows the collection of integrated air samples over the 6 a.m. to 9 a.m. period by unattended, automated samplers. This method has incorporated both sampling approaches.

2. Applicable Documents

2.1 ASTM Standards

D1356 - Definition of Terms Related to Atmospheric Sampling and Analysis

E260 - Recommended Practice for General Gas Chromatography Procedures

E355 - Practice for Gas Chromatography Terms and Relationships

2.2 Other Documents

U. S. Environmental Protection Agency Technical Assistance Documents (4,5)

Laboratory and Ambient Air Studies (6-10)

3. Summary of Method

3.1 A whole air sample is either extracted directly from the ambient air and analyzed on site by the GC system or collected into a precleaned sample canister and analyzed off site.

3.2 The analysis requires drawing a fixed-volume portion of the sample air at a low flow rate through a glass-bead filled trap that is cooled to approximately -186°C with liquid argon. The cryogenic trap simultaneously collects and concentrates the NMOC (either via condensation or adsorption) while allowing the methane, nitrogen, oxygen, etc. to pass through the trap without retention. The

system is dynamically calibrated so that the volume of sample passing through the trap does not have to be quantitatively measured, but must be precisely repeatable between the calibration and the analytical phases.

3.3 After the fixed-volume air sample has been drawn through the trap, a helium carrier gas flow is diverted to pass through the trap, in the opposite direction to the sample flow, and into an FID. When the residual air and methane have been flushed from the trap and the FID baseline restablizes, the cryogen is removed and the temperature of the trap is raised to approximately 90°C.

3.4 The organic compounds previously collected in the trap revolatilize due to the increase in temperature and are carried into the FID, resulting in a response peak or peaks from the FID. The area of the peak or peaks is integrated, and the integrated value is translated to concentration units via a previously-obtained calibration curve relating integrated peak areas with known concentrations of propane.

3.5 By convention, concentrations of NMOC are reported in units of parts per million carbon (ppmC), which, for a specified compound, is the concentration of volume (ppmV) multiplied by the number of carbon atoms in the compound.

3.6 The cryogenic trap simultaneously concentrates the NMOC while separating and removing the methane from air samples. The technique is thus direct reading for NMOC and, because of the concentration step, is more sensitive than conventional continuous NMOC analyzers.

4. Significance

4.1 Accurate measurements of ambient concentrations of NMOC are important for the control of photochemical smog because these organic compounds are primary precursors of atmospheric ozone and other oxidants. Achieving and maintaining compliance with the NAAQS for ozone thus depends largely on control of ambient levels of NMOC.

4.2 The NMOC concentrations typically found at urban sites may range up to 5-7 ppmC or higher. In order to determine transport of precursors into an area, measurement of NMOC upwind of the area may be necessary. Upwind NMOC concentrations are likely to be less than a few tenths of 1 ppm.

4.3 Conventional methods that depend on gas chromatography and qualitative and quantitative species evaluation are excessively difficult and expensive to operate and maintain when speciated

measurements are not needed. The method described here involves a simple, cryogenic preconcentration procedure with subsequent, direct, flame ionization detection. The method is sensitive and provides accurate measurements of ambient NMOC concentrations where speciated data are not required as applicable to the EKMA.

5. Definitions

[Note: Definitions used in this document and in any user-prepared Standard Operating Procedures (SOPs) should be consistent with ASTM Methods D1356 and E355. All abbreviations and symbols are defined within this document at point of use.]

5.1 Absolute pressure - Pressure measured with reference to absolute zero pressure (as opposed to atmospheric pressure), usually expressed as pounds-force per square inch absolute (psia).

5.2 Cryogen - A substance used to obtain very low trap temperatures in the NMOC analysis system. Typical cryogens are liquid argon (bp-185.7) and liquid oxygen (bp-183.0).

5.3 Dynamic calibration - Calibration of an analytical system with pollutant concentrations that are generated in a dynamic, flowing system, such as by quantitative, flow-rate dilution of a high concentration gas standard with zero gas.

5.4 EKMA - Empirical Kinetics Modeling Approach; an empirical model that attempts to relate morning ambient concentrations of non-methane organic compounds (NMOC) and NO_x with subsequent peak, downwind ambient ozone concentrations; used by pollution control agencies to estimate the degree of hydrocarbon emission reduction needed to achieve compliance with national ambient air quality standards for ozone.

5.5 Gauge pressure - Pressure measured with reference to atmospheric pressure (as opposed to absolute pressure). Zero gauge pressure (0 psig) is equal to atmospheric pressure, or 14.7 psia (101 kPa).

5.6 <u>In situ</u> - In place; <u>In situ</u> measurements are obtained by direct, on-the-spot analysis, as opposed to subsequent, remote analysis of a collected sample.

5.7 Integrated sample - A sample obtained uniformly over a specified time period and representative of the average levels of pollutants during the time period.

5.8 NMOC - Nonmethane organic compounds; total organic compounds as measured by a flame ionization detector, excluding methane.

5.9 ppmC - Concentration unit of parts per million carbon; for a specific compound, ppmC is equivalent to parts per million by

volume (ppmv) multiplied by the number of carbon atoms in the compound.

5.10 Sampling - The process of withdrawing or isolating a representative portion of an ambient atmosphere, with or without the simultaneous isolation of selected components for subsequent analysis.

6. Interferences

6.1 In field and laboratory evaluation, water was found to cause a positive shift in the FID baseline. The effect of this shift is minimized by carefully selecting the integration termination point and adjusted baseline used for calculating the area of the NMOC peak(s).

6.2 When using helium as a carrier gas, FID response is quite uniform for most hydrocarbon compounds, but the response can vary considerably for other types of organic compounds.

7. Apparatus

7.1 Direct Air Sampling (Figure 1)

7.1.1 Sample manifold or sample inlet line - to bring sample air into the analytical system.

7.1.2 Vacuum pump or blower - to draw sample air through a sample manifold or long inlet line to reduce inlet residence time. Maximum residence time should be no greater than 1 minute.

7.2 Remote Sample Collection in Pressurized Canisters (Figure 2)

7.2.1 Sample canister(s) - stainless steel, Summa®-polished vessel(s) of 4-6 L capacity (Scientific Instrumentation Specialists, Inc., P.O. Box 8941, Moscow, ID 83843), used for automatic collection of 3-hour integrated field air samples. Each canister should have a unique identification number stamped on its frame.

7.2.2 Sample pump - stainless steel, metal bellows type (Model MB-151, Metal Bellows Corp., 1075 Providence Highway, Sharon, MA 02067) capable of 2 atmospheres minimum output pressure. Pump must be free of leaks, clean, and uncontaminated by oil or organic compounds.

7.2.3 Pressure gauge - 0-30 psig (0-240 kPa).

7.2.4 Solenoid valve - special electrically-operated, bistable solenoid valve (Skinner Magnelatch Valve, New Britain, CT), to control sample flow to the canister with negligible temperature rise (Figure 3). The use

of the Skinner Magnelatch valve avoids any substantial temperature rise that would occur with a conventional, normally closed solenoid valve, which would have to be energized during the entire sample period. This temperature rise in the valve could cause outgasing of organics from the Viton valve seat material. The Skinner Magnelatch valve requires only a brief electrical pulse to open or close at the appropriate start and stop times and therefore experiences no temperature increase. The pulses may be obtained with an electronic timer that can be programmed for short (5 to 60 seconds) ON periods or with a conventional mechanical timer and a special pulse circuit. Figure 3[a] illustrates a simple electrical pulse circuit for operating the Skinner Magnelatch solenoid valve with a conventional mechanical timer. However, with this simple circuit, the valve may operate unpredictably during brief power interruptions or if the time is manually switched on and off too fast. A better circuit incorporating a time-delay relay to provide more reliable valve operation is shown in Figure 3[b].

7.2.5 Stainless steel orifice (or short capillary) - capable of maintaining a substantially constant flow over the sampling period (see Figure 4).

7.2.6 Particulate matter filter - 2 micron stainless steel sintered in-line type (see Figure 4).

7.2.7 Timer - used for unattended sample collection. Capable of controlling pump(s) and solenoid valve.

7.3 Sample Canister Cleaning (Figure 5)

7.3.1 Vacuum pump - capable of evacuating sample canister(s) to an absolute pressure of <5 mm Hg.

7.3.2 Manifold - stainless steel manifold with connections for simultaneously cleaning several canisters.

7.3.3 Shut off valve(s) - seven required.

7.3.4 Vacuum gauge - capable of measuring vacuum in the manifold to an absolute pressure of 5 mm Hg or less.

7.3.5 Cryogenic trap (2 required) - U-shaped open tubular trap cooled with liquid nitrogen or argon used to prevent contamination from back diffusion of oil from vacuum pump, and to provide clean, zero air to sample canister(s).

7.3.6 Pressure gauge - 0-50 psig (0-345 kPa), to monitor zero air pressure.

7.3.7 Flow control valve - to regulate flow of zero air into canister(s).

7.3.8 Humidifier - water bubbler or other system capable of providing moisture to the zero air supply.

7.4 Analytical System (Figure 1)

7.4.1 FID detector system - including flow controls for the FID fuel and air, temperature control for the FID, and signal processing electronics. The FID burner air, hydrogen, and helium carrier flow rates should be set according to the manufacturer's instructions to obtain an adequate FID response while maintaining as stable a flame as possible throughout all phases of the analytical cycle.

7.4.2 Chart recorder - compatible with the FID output signal, to record FID response.

7.4.3 Electronic integrator - capable of integrating the area of one or more FID response peaks and calculating peak area corrected for baseline drift. If a separate integrator and chart recorder are used, care must be exercised to be sure that these components do not interfere with each other electrically. Range selector controls on both the integrator and the FID analyzer may not provide accurate range ratios, so individual calibration curves should be prepared for each range to be used. The integrator should be capable of marking the beginning and ending of peaks, constructing the appropriate baseline between the start and end of the integration period, and calculating the peak area.

Note: The FID (7.4.1), chart recorder (7.4.2), integrator (7.4.3), valve heater (7.4.5), and a trap heating system are conveniently provided by a standard laboratory chromatograph and associated integrator. EPA has adapted two such systems for the PDFID method: a Hewlett-Packard model 5880 (Hewlett-Packard Corp., Avondale, PA) and a Shimadzu model GC8APF (Shimadzu Scientific Instruments Inc., Columbia, MD; see Reference 5). Other similar systems may also be applicable.

7.4.4 Trap - the trap should be carefully constructed from a single piece of chromatographic-grade stainless steel tubing (0.32 cm O.D, 0.21 cm I.D.) as shown in Figure 6. The central portion of the trap (7-10 cm) is packed with 60/80 mesh glass beads, with small glass wool (dimethyldichlorosilane-treated) plugs to retain the beads. The trap must fit conveniently into the Dewar flask (7.4.9), and the arms must be of an appropriate length to allow the beaded portion of the trap to be submerged below the level of liquid cryogen in the Dewar. The trap should connect directly to the six-port valve, if possible, to minimize line length between the trap and the FID. The trap must be mounted to allow the Dewar to be slipped conveniently on and off the trap and also to facilitate heating of the trap (see 7.4.13).

7.4.5 Six-port chromatographic valve - Seiscor Model VIII (Seismograph Service Corp., Tulsa, OK), Valco Model 9110 (Valco Instruments Co., Houston, TX), or equivalent. The six-port valve and as much of the interconnecting tubing as practical should be located inside an oven or otherwise heated to 80 - 90°C to minimize wall losses or adsorption/desorption in the connecting tubing. All lines should be as short as practical.

7.4.6 Multistage pressure regulators - standard two-stage, stainless steel diaphram regulators with pressure gauges, for helium, air, and hydrogen cylinders.

7.4.7 Pressure regulators - optional single stage, stainless steel, with pressure gauge, if needed, to maintain constant helium carrier and hydrogen flow rates.

7.4.8 Fine needle valve - to adjust sample flow rate through trap.

7.4.9 Dewar flask - to hold liquid cryogen to cool the trap, sized to contain submerged portion of trap.

7.4.10 Absolute pressure gauge - 0-450 mm Hg, (2 mm Hg [scale divisions indicating units]), to monitor repeatable volumes of sample air through cryogenic trap (Wallace and Tiernan, Model 61C-ID-0410, 25 Main Street, Belleville, NJ).

7.4.11 Vacuum reservoir - 1-2 L capacity, typically 1 L.

7.4.12 Gas purifiers - gas scrubbers containing Drierite® or silica gel and 5A molecular sieve to remove moisture and organic impurities in the helium, air, and hydrogen gas flows (Alltech Associates, Deerfield, IL). Note: Check purity of gas purifiers prior to use by passing zero-air through the unit and analyzing according to Section 11.4. Gas purifiers are clean if produce [contain] less than 0.02 ppmC hydrocarbons.

7.4.13 Trap heating system - chromatographic oven, hot water, or other means to heat the trap to 80° to 90°C. A simple heating source for the trap is a beaker or Dewar filled with water maintained at 80-90°C. More repeatable types of heat sources are recommended, including a temperature-programmed chromatograph oven, electrical heating of the trap itself, or any type of heater that brings the temperature of the trap up to 80-90°C in 1-2 minutes.

7.4.14 Toggle shut-off valves (2) - leak free, for vacuum valve and sample valve.

7.4.15 Vacuum pump - general purpose laboratory pump capable of evacuating the vacuum reservoir to an appropriate vacuum that allows the desired sample volume to be drawn through the trap.

7.4.16 Vent - to keep the trap at atmospheric pressure during trapping when using pressurized canisters.

7.4.17 Rotameter - to verify vent flow.

7.4.18 Fine needle valve (optional) - to adjust flow rate of sample from canister during analysis.

7.4.19 Chromatographic-grade stainless steel tubing (Alltech Applied Science, 2051 Waukegan Road, Deerfield, IL, 60015, (312) 948-8600) and stainless steel plumbing fittings - for interconnections. All such materials in contact with the sample, analyte, or support gases prior to analysis should be stainless steel or other inert metal. Do not use plastic or Teflon® tubing or fittings.

7.5 Commercially Available PDFID System (5)

7.5.1 A convenient and cost-effective modular PDFID system suitable for use with a conventional laboratory chromatograph is commercially available (NuTech

Corporation, Model 8548, 2806 Cheek Road, Durham, NC, 27704, (919) 682-0402).

7.5.2 This modular system contains almost all of the apparatus items needed to convert the chromatograph into a PDFID analytical system and has been designed to be readily available and easy to assemble.

8. Reagents and Materials

8.1 Gas cylinders of helium and hydrogen - ultrahigh purity grade.

8.2 Combustion air - cylinder containing less than 0.02 ppm hydrocarbons, or equivalent air source.

8.3 Propane calibration standard - cylinder containing 1-100 ppm (3-300 ppmC) propane in air. The cylinder assay should be traceable to a National Bureau of Standards (NBS) Standard Reference Material (SRM) or to a NBS/EPA-approved Certified Reference Material (CRM).

8.4 Zero air - cylinder containing less than 0.02 ppmC hydrocarbons. Zero air may be obtained from a cylinder of zero-grade compressed air scrubbed with Drierite® or silica gel and 5A molecular sieve or activated charcoal, or by catalytic cleanup of ambient air. All zero air should be passed through a liquid argon cold trap for final cleanup, then passed through a hydrocarbon-free water bubbler (or other device) for humidification.

8.5 Liquid cryogen - liquid argon (bp -185.7°C) or liquid oxygen, (bp -183°C) may be used as the cryogen. Experiments have shown no differences in trapping efficiency between liquid argon and liquid oxygen. However, appropriate safety precautions must be taken if liquid oxygen is used. Liquid nitrogen (bp -195°C) should not be used because it causes condensation of oxygen and methane in the trap.

9. Direct Sampling

9.1 For direct ambient air sampling, the cryogenic trapping system draws the air sample directly from a pump-ventilated distribution manifold or sample line (see Figure 1). The connecting line should be of small diameter (1/8" O.D.) stainless steel tubing and as short as possible to minimize its dead volume.

9.2 Multiple analyses over the sampling period must be made to establish hourly or 3-hour NMOC concentration averages.

10. Sample Collection in Pressurized Canister(s)

For integrated pressurized canister sampling, ambient air is sampled by a metal bellows pump through a critical orifice (to maintain constant flow), and pressurized into a clean, evacuated, Summa®-polished sample

canister. The critical orifice size is chosen so that the canister is pressurized to approximately one atmosphere above ambient pressure, at a constant flow rate over the desired sample period. Two canisters are connected in parallel for duplicate samples. The canister(s) are then returned to the laboratory for analysis, using the PDFID analytical system. Collection of ambient air samples in pressurized canisters provides the following advantages:

- Convenient integration of ambient samples over a specific time period
- Capability of remote sampling with subsequent central laboratory analysis
- Ability to ship and store samples, if necessary
- Unattended sample collection
- Analysis of samples from multiple sites with one analytical system
- Collection of replicate samples for assessment of measurement precision

With canister sampling, however, great care must be exercised in selecting, cleaning, and handling the sample canister(s) and sampling apparatus to avoid losses or contamination of the samples.

10.1 Canister Cleanup and Preparation

10.1.1 All canisters must be clean and free of any contaminants before sample collection.

10.1.2 Leak test all canisters by pressurizing them to approximately 30 psig [200 kPa (gauge)] with zero air. The use of the canister cleaning system (see Figure 5) may be adequate for this task. Measure the final pressure - close the canister valve, then check the pressure after 24 hours. If leak tight, the pressure should not vary more than $\pm$ 2 psig over the 24-hour period. Note leak check result on sampling data sheet, Figure 7.

10.1.3 Assemble a canister cleaning system, as illustrated in Figure 5. Add cryogen to both the vacuum pump and zero air supply traps. Connect the canister(s) to the manifold. Open the vent shut off valve and the canister valve(s) to release any remaining pressure in the canister. Now close the vent shut off valve and open the vacuum shut off valve. Start the vacuum pump and evacuate the canister(s) to $\leq$ 5.0 mm Hg (for at least one hour). [Note: On a daily basis or more often if necessary, blow-out the cryogenic traps with zero air to remove any trapped water from previous canister cleaning cycles.]

10.1.4 Close the vacuum and vacuum gauge shut off valves and open the zero air shut off valve to pressurize the canister(s) with moist zero air to approximately 30 psig [200 kPa (gauge)]. If a zero gas generator systems is used, the flow rate may need to be limited to maintain the zero air quality.

10.1.5 Close the zero shut off valve and allow canister(s) to vent down to atmospheric pressure through the vent shut off valve. Close the vent shut off valve. Repeat steps 10.1.3 through 10.1.5 two additional times for a total of three (3) evacuation/ pressurization cycles for each set of canisters.

10.1.6 As a "blank" check of the canister(s) and cleanup procedure, analyze the final zero-air fill of 100% of the canisters until the cleanup system and canisters are proven reliable. The check can then be reduced to a lower percentage of canisters. Any canister that does not test clean (compared to direct analysis of humidified zero air of less than 0.02 ppmC) should not be utilized.

10.1.7 The canister is then re-evacuated to ≤ 5.0 mm Hg, using the canister cleaning system, and remains in this condition until use. Close the canister valve, remove the canister from the canister cleaning system and cap canister connection with a stainless steel fitting. The canister is now ready for collection of an air sample. Attach an identification tag to the neck of each canister for field notes and chain-of-custody purposes.

10.2 Collection of Integrated Whole-Air Samples

10.2.1 Assemble the sampling apparatus as shown in Figure 2. The connecting lines between the sample pump and the canister(s) should be as short as possible to minimize their volume. A second canister is used when a duplicate sample is desired for quality assurance (QA) purposes (see Section 12.2.4). The small auxiliary vacuum pump purges the inlet manifold or lines with a flow of several L/min to minimize the sample residence time. The larger metal bellows pump takes a small portion of this sample to fill and pressurize the sample canister(s). Both pumps should be shock-

mounted to minimize vibration. Prior to field use, each sampling system should be leak tested. The outlet side of the metal bellows pump can be checked for leaks by attaching the 0-30 psig pressure gauge to the canister(s) inlet via connecting tubing and pressurizing to 2 atmospheres or approximately 29.4 psig. If pump and connecting lines are leak free pressure should remain at ±2 psig for 15 minutes. To check the inlet side, plug the sample inlet and insure that there is no flow at the outlet of the pump.

10.2.2 Calculate the flow rate needed so that the canister(s) are pressurized to approximately one atmosphere above ambient pressure (2 atmospheres absolute pressure) over the desired sample period, utilizing the following equation:

$$F = \frac{(P)(V)(N)}{(T)(60)}$$

where:

F = flow rate (cm^3/min)
P = final canister pressure (atmospheres absolute)
= (Pg/Pa) + 1
V = volume of the canister (cm^3)
N = number of canisters connected together for simultaneous sample collection
T = sample period (hours)
Pg = gauge pressure in canister, psig (kPa)
Pa = standard atmospheric pressure, 14.7 psig (101 kPa)

For example, if one 6-L canister is to be filled to 2 atmospheres absolute pressure (14.7 psig) in 3 hours, the flow rate would be calculated as follows:

$$F = \frac{2 \times 6000 \times 1}{3 \times 60} = 67\ cm^3/min$$

10.2.3 Select a critical orifice or hypodermic needle suitable to maintain a substantially constant flow at the calculated flow rate into the canister(s) over the desired sample period. A 30-gauge hypodermic needle,

2.5 cm long, provides a flow of approximately 65 cm^3/min with the Metal Bellows Model MBV-151 pump (see Figure 4). Such a needle will maintain approximately constant flow up to a canister pressure of about 10 psig (71 kPa), after which the flow drops with increasing pressure. At 14.7 psig (2 atmospheres absolute pressure), the flow is about 10% below the original flow.

10.2.4 Assemble the 2.0 micron stainless steel in-line particulate filter and position it in front of the critical orifice. A suggested filter-hypodermic needle assembly can be fabricated as illustrated in Figure 4.

10.2.5 Check the sampling system for contamination by filling two evacuated, cleaned canister(s) (See Section 10.1) with humidified zero air through the sampling system. Analyze the canisters according to Section 11.4. The sampling system is free of contamination if the canisters contain less than 0.02 ppmC hydrocarbons, similar to that of humidified zero air.

10.2.6 During the system contamination check procedure, check the critical orifice flow rate on the sampling system to insure that sample flow rate remains relatively constant ($\pm$10%) up to about 2 atmospheres absolute pressure (101 kpa). Note: A drop in the flow rate may occur near the end of the sampling period as the canister pressure approaches two atmospheres.

10.2.7 Reassemble the sampling system. If the inlet sample line is longer than 3 meters, install an auxiliary pump to ventilate the sample line, as illustrated in Figure 2.

10.2.8 Verify that the timer, pump(s) and solenoid valve are connected and operating properly.

10.2.9 Verify that the timer is correctly set for the desired sample period, and that the solenoid valve is closed.

10.2.10 Connect a cleaned, evacuated canister(s) (Section 10.1) to the non-contaminated sampling system, by way of the solenoid valve, for sample collection.

10.2.11 Make sure the solenoid valve is closed. Open the canister valve(s). Temporarily connect a small rotameter to the sample inlet to verify that there is

no flow. Note: Flow detection would indicate a leaking (or open) solenoid valve. Remove the rotameter after leak detection procedure.

10.2.12 Fill out the necessary information on the Field Data Sheet (Figure 7).

10.2.13 Set the automatic timer to start and stop the pump or pumps to open and close the solenoid valve at the appropriate time for the intended sample period. Sampling will begin at the pre-determined time.

10.2.14 After the sample period, close the canister valve(s) and disconnect the canister(s) from the sampling system. Connect a pressure gauge to the canister(s) and briefly open and close the canister valve. Note the canister pressure on the Field Data Sheet (see Figure 7). The canister pressure should be approximately 2 atmospheres absolute [1 atmosphere or 101 kPa (gauge)]. Note: If the canister pressure is not approximately 2 atmospheres absolute (14.7 psig), determine and correct the cause before next sample. Re-cap canister valve.

10.2.15 Fill out the identification tag on the sample canister(s) and complete the Field Data Sheet as necessary. Note any activities or special conditions in the area (rain, smoke, etc.) that may affect the sample contents on the sampling data sheet.

10.2.16 Return the canister(s) to the analytical system for analysis.

11. Sample Analysis

11.1 Analytical System Leak Check

11.1.1 Before sample analysis, the analytical system is assembled (see Figure 1) and leak checked.

11.1.2 To leak check the analytical system, place the six-port gas valve in the trapping position. Disconnect and cap the absolute pressure gauge. Insert a pressure gauge capable of recording up to 60 psig at the vacuum valve outlet.

11.1.3 Attach a valve and a zero air supply to the sample inlet port. Pressurize the system to about 50 psig (350 kPa) and close the valve.

11.1.4 Wait approximately 3 hrs. and re-check pressure. If the pressure did not vary more than ± 2 psig, the system is considered leak tight.

11.1.5 If the system is leak free, de-pressurize and reconnect absolute pressure gauge.

11.1.6 The analytical system leak check procedure needs to be performed during the system checkout, during a series of analysis or if leaks are suspected. This should be part of the user-prepared SOP manual (see Section 12.1).

11.2 Sample Volume Determination

11.2.1 The vacuum reservoir and absolute pressure gauge are used to meter a precisely repeatable volume of sample air through the cryogenically-cooled trap, as follows: With the sample valve closed and the vacuum valve open, the reservoir is first evacuated with the vacuum pump to a predetermined pressure (e.g., 100 mm Hg). Then the vacuum valve is closed and the sample valve is opened to allow sample air to be drawn through the cryogenic trap and into the evacuated reservoir until a second predetermined reservoir pressure is reached (e.g., 300 mm Hg). The (fixed) volume of air thus sampled is determined by the pressure rise in the vacuum reservoir (difference between the predetermined pressures) as measured by the absolute pressure gauge (see Section 12.2.1).

11.2.2 The sample volume can be calculated by:

$$V_s = \frac{()P)(V_r)}{(P_s)}$$

where:

V_s = volume of air sampled (standard cm^3)

$)P$ = pressure difference measured by gauge (mm Hg)

V_r = volume of vacuum reservoir (cm^3) usually 1 L

P_s = standard pressure (760 mm Hg)

For example, with a vacuum reservoir of 1000 cm^3 and a pressure change of 200 mm Hg (100 to 300 mm Hg), the volume sampled would be 263 cm^3. [Note: Typical sample volume using this procedure is between 200-300 cm^3.]

11.2.3 The sample volume determination need only be performed once during the system check-out and shall be part of the user-prepared SOP Manual (see Section 12.1).

11.3 Analytical System Dynamic Calibration

11.3.1 Before sample analysis, a complete dynamic calibration of the analytical system should be carried out at five or more concentrations on each range to define the calibration curve. This should be carried out initially and periodically thereafter [may be done only once during a series of analyses]. This should be part of the user-prepared SOP Manual (See Section 12.1). The calibration should be verified with two or three-point calibration checks (including zero) each day the analytical system is used to analyze samples.

11.3.2 Concentration standards of propane are used to calibrate the analytical system. Propane calibration standards may be obtained directly from low concentration cylinder standards or by dilution of high concentration cylinder standards with zero air (see Section 8.3). Dilution flow rates must be measured accurately, and the combined gas stream must be mixed thoroughly for successful calibration of the analyzer. Calibration standards should be sampled directly from a vented manifold or tee. Note: Remember that a propane NMOC concentration in ppmC is three times the volumetric concentration in ppm.

11.3.3 Select one or more combinations of the following parameters to provide the desired range or ranges (e.g., 0-1.0 ppmC or 0-5.0 ppmC): FID attenuator setting, output voltage setting, integrator resolution (if applicable), and sample volume. Each individual range should be calibrated separately and should have a separate calibration curve. Note: Modern GC integrators may provide automatic ranging such that several decades of concentration may be covered in a single range. The user-prepared SOP manual should address variations applicable to a specific system design (see Section 12.1).

11.3.4 Analyze each calibration standard three times according to the procedure in Section 11.4. Insure that flow rates, pressure gauge start and stop

readings, initial cryogen liquid level in the Dewar, timing, heating, integrator settings, and other variables are the same as those that will be used during analysis of ambient samples. Typical flow rates for the gases are: hydrogen, 30 cm^3/minute; helium carrier, 30 cm^3/minute; burner air, 400 cm^3/minute.

11.3.5 Average the three analyses for each concentration standard and plot the calibration curve(s) as average integrated peak area reading versus concentration in ppmC. The relative standard deviation for the three analyses should be less than 3% (except for zero concentration). Linearity should be expected; points that appear to deviate abnormally should be repeated. Response has been shown to be linear over a wide range (0-10,000 ppbC). If nonlinearity is observed, an effort should be made to identify and correct the problem. If the problem cannot be corrected, additional points in the nonlinear region may be needed to define the calibration curve adequately.

11.4 Analysis Procedure

11.4.1 Insure the analytical system has been assembled properly, leaked checked, and properly calibrated through a dynamic standard calibration. Light the FID detector and allow to stabilize.

11.4.2 Check and adjust the helium carrier pressure to provide the correct carrier flow rate for the system. Helium is used to purge residual air and methane from the trap at the end of the sampling phase and to carry the re-volatilized NMOC from the trap into the FID. A single-stage auxiliary regulator between the cylinder and the analyzer may not be necessary, but is recommended to regulate the helium pressure better than the multistage cylinder regulator. When an auxiliary regulator is used, the secondary stage of the two-stage regulator must be set at a pressure higher than the pressure setting of the single-stage regulator. Also check the FID hydrogen and burner air flow rates (see 11.3.4).

11.4.3 Close the sample valve and open the vacuum valve to evacuate the vacuum reservoir to a specific predetermined valve (e.g., 100 mm Hg).

11.4.4 With the trap at room temperature, place the six-port valve in the inject position.

11.4.5 Open the sample valve and adjust the sample flow rate needle valve for an appropriate trap flow of 50-100 cm^3/min. Note: The flow will be lower later, when the trap is cold.

11.4.6 Check the sample canister pressure before attaching it to the analytical system and record on Field Data Sheet (see Figure 7). Connect the sample canister or direct sample inlet to the six-port valve, as shown in Figure 1. For a canister, either the canister valve or an optional fine needle valve installed between the canister and the vent is used to adjust the canister flow rate to a value slightly higher than the trap flow rate set by the sample flow rate needle valve. The excess flow exhausts through the vent, which assures that the sample air flowing through the trap is at atmospheric pressure. The vent is connected to a flow indicator such as a rotameter as an indication of vent flow to assist in adjusting the flow control valve. Open the canister valve and adjust the canister valve or the sample flow needle valve to obtain a moderate vent flow as indicated by the rotameter. The sample flow rate will be lower (and hence the vent flow rate will be higher) when the trap is cold.

11.4.7 Close the sample valve and open the vacuum valve (if not already open) to evacuate the vacuum reservoir. With the six-port valve in the inject position and the vacuum valve open, open the sample valve for 2-3 minutes [with both valves open, the pressure reading won't change] to flush and condition the inlet lines.

11.4.8 Close the sample valve and evacuate the reservoir to the predetermined sample starting pressure (typically 100 mm Hg) as indicated by the absolute pressure gauge.

11.4.9 Switch the six-port valve to the sample position.

11.4.10 Submerge the trap in the cryogen. Allow a few minutes for the trap to cool completely (indicated when the cryogen stops boiling). Add cryogen to the initial level used during system dynamic calibration. The level of the cryogenic liquid should remain constant with respect to the trap and should completely cover the beaded portion of the trap.

11.4.11 Open the sample valve and observe the increasing pressure on the pressure gauge. When it reaches the specific predetermined pressure (typically 300 mm Hg) representative of the desired sample volume (Section 11.2), close the sample valve.

11.4.12 Add a little cryogen or elevate the Dewar to raise the liquid level to a point slightly higher (3-15 mm) than the initial level at the beginning of the trapping. Note: This insures that organics do not bleed from the trap and are counted as part of the NMOC peak(s).

11.4.13 Switch the 6-port valve to the inject position, keeping the cryogenic liquid on the trap until the methane and upset peaks have diminished (10-20 seconds). Now close the canister valve to conserve the remaining sample in the canister.

11.4.14 Start the integrator and remove the Dewar flask containing the cryogenic liquid from the trap.

11.4.15 Close the GC oven door and allow the GC oven (or alternate trap heating system) to heat the trap at a predetermined rate (typically, 30ºC/min) to 90º. Heating the trap volatilizes the concentrated NMOC such that the FID produces integrated peaks. A uniform trap temperature rise rate (above 0ºC) helps to reduce variability and facilitates more accurate correction for the moisture-shifted baseline. With a chromatograph oven to heat the trap, the following parameters have been found to be acceptable: initial temperature, 30ºC; initial time, 0.20 minutes (following start of the integrator); heat rate, 30º/minute; final temperature, 90ºC.

11.4.16 Use the same heating process and temperatures for both calibration and sample analysis. Heating the trap too quickly may cause an initial negative response that could hamper accurate integration. Some initial

experimentation may be necessary to determine the optimal heating procedure for each system. Once established, the procedure should be consistent for each analysis as outlined in the user-prepared SOP Manual.

11.4.17 Continue the integration (generally, in the range of 1-2 minutes is adequate) only long enough to include all of the organic compound peaks and to establish the end point FID baseline, as illustrated in Figure 8. The integrator should be capable of marking the beginning and ending of peaks, constructing the appropriate operational baseline between the start and end of the integration period, and calculating the resulting corrected peak area. This ability is necessary because the moisture in the sample, which is also concentrated in the trap, will cause a slight positive baseline shift. This baseline shift starts as the trap warms and continues until all of the moisture is swept from the trap, at which time the baseline returns to its normal level. The shift always continues longer than the ambient organic peak(s). The integrator should be programmed to correct for this shifted baseline by ending the integration at a point after the last NMOC peak and prior to the return of the shifted baseline to normal (see Figure 8) so that the calculated operational baseline effectively compensates for the water-shifted baseline. Electronic integrators either do this automatically or they should be programmed to make this correction. Alternatively, analyses of humidified zero air prior to sample analyses should be performed to determine the water envelope and the proper blank value for correcting the ambient air concentration measurements accordingly. Heating and flushing of the trap should continue after the integration period has ended to insure all water has been removed to prevent buildup of water in the trap. Therefore, be sure that the 6-port valve remains in the inject position until all moisture has purged from the trap (3 minutes or longer).

11.4.18 Use the dynamic calibration curve (see Section 11.3) to convert the integrated peak area reading into concentration units (ppmC). Note that the NMOC peak shape may not be precisely reproducible due to variations in heating the trap, but the total NMOC peak area should be reproducible.

11.4.19 Analyze each canister sample at least twice and report the average NMOC concentration. Problems during an analysis occasionally will cause erratic or inconsistent results. If the first two analyses do not agree within ± 5% relative standard deviation (RSD), additional analyses should be made to identify inaccurate measurements and produce a more accurate average (see also Section 12.2).

12. Performance Criteria and Quality Assurance

This section summarizes required quality assurance measures and provides guidance concerning performance criteria that should be achieved within each laboratory.

12.1 Standard Operating Procedures (SOPs)

12.1.1 Users should generate SOPs describing and documenting the following activities in their laboratory: (1) assembly, calibration, leak check, and operation of the specific sampling system and equipment used; (2) preparation, storage, shipment, and handling of samples; (3) assembly, leak check, calibration, and operation of the analytical system, addressing the specific equipment used; (4) canister storage and cleaning; and (5) all aspects of data recording and processing, including lists of computer hardware and software used.

12.1.2 SOPs should provide specific stepwise instructions and should be readily available to, and understood by, the laboratory personnel conducting the work.

12.2 Method Sensitivity, Accuracy, Precision and Linearity

12.2.1 The sensitivity and precision of the method is proportional to the sample volume. However, ice formation in the trap may reduce or stop the sample flow during trapping if the sample volume exceeds 500 cm^3. Sample volumes below about 100-150 cm^3 may cause increased measurement variability due to dead volume in lines and valves. For most typical ambient NMOC

concentrations, sample volumes in the range of 200-400 cm^3 appear to be appropriate. If a response peak obtained with a 400 cm^3 sample is off scale or exceeds the calibration range, a second analysis can be carried out with a smaller volume. The actual sample volume used need not be accurately known if it is precisely repeatable during both calibration and analysis. Similarly, the actual volume of the vacuum reservoir need not be accurately known. But the reservoir volume should be matched to the pressure range and resolution of the absolute pressure gauge so that the measurement of the pressure change in the reservoir, hence the sample volume, is repeatable within 1%. A 1000 cm^3 vacuum reservoir and a pressure change of 200 mm Hg, measured with the specified pressure gauge, have provided a sampling precision of $\pm$ 1.31 cm^3. A smaller volume reservoir may be used with a greater pressure change to accommodate absolute pressure gauges with lower resolution, and vice versa.

12.2.2 Some FID detector systems associated with laboratory chromatographs may have autoranging. Others may provide attenuator control and internal full-scale output voltage selectors. An appropriate combination should be chosen so that an adequate output level for accurate integration is obtained down to the detection limit; however, the electrometer or integrator must not be driven into saturation at the upper end of the calibration. Saturation of the electrometer may be indicated by flattening of the calibration curve at high concentrations. Additional adjustments of range and sensitivity can be provided by adjusting the sample volume use, as discussed in Section 12.2.1.

12.2.3 System linearity has been documented (6) from 0 to 10,000 ppbC.

12.2.4 Some organic compounds contained in ambient air are "sticky" and may require repeated analyses before they fully appear in the FID output. Also, some adjustment may have to be made in the integrator off time setting to accommodate compounds that reach the FID late in the analysis cycle. Similarly, "sticky" compounds from ambient samples or from contaminated propane

standards may temporarily contaminate the analytical system and can affect subsequent analyses. Such temporary contamination can usually be removed by repeated analyses of humidified zero air.

12.2.5 Simultaneous collection of duplicate samples decreases the possibility of lost measurement data from samples lost due to leakage or contamination in either of the canisters. Two (or more) canisters can be filled simultaneously by connecting them in parallel (see Figure 2(a)) and selecting an appropriate flow rate to accommodate the number of canisters (Section 10.2.2). Duplicate (or replicate) samples also allow assessment of measurement precision based on the differences between duplicate samples (or the standard deviations among replicate samples).

13. Method Modification

13.1 Sample Metering System

13.1.1 Although the vacuum reservoir and absolute pressure gauge technique for metering the sample volume during analysis is efficient and convenient, other techniques should work also.

13.1.2 A constant sample flow could be established with a vacuum pump and a critical orifice, with the six-port valve being switched to the sample position for a measured time period. A gas volume meter, such as a wet test meter, could also be used to measure the total volume of sample air drawn through the trap. These alternative techniques should be tested and evaluated as part of a user-prepared SOP manual.

13.2 FID Detector System

13.2.1 A variety of FID detector systems should be adaptable to the method.

13.2.2 The specific flow rates and necessary modifications for the helium carrier for any alternative FID instrument should be evaluated prior to use as apart of the user-prepared SOP manual.

13.3 Range

13.3.1 It may be possible to increase the sensitivity of the method by increasing the sample volume. However, limitations may arise such as plugging of the trap by ice.

13.3.2 Any attempt to increase sensitivity should be evaluated as part of the user-prepared SOP manual.

13.4 Sub-Atmospheric Pressure Canister Sampling

13.4.1 Collection and analysis of canister air samples at sub-atmospheric pressure is also possible with minor modifications to the sampling and analytical procedures.

13.4.2 Method TO-14, "Integrated Canister Sampling for Selective Organics: Pressurized and Sub-atmospheric Collection Mechanism," addresses sub-atmospheric pressure canister sampling. Additional information can be found in the literature (11-17).

1. Uses, Limitations, and Technical Basis of Procedures for Quantifying Relationships Between Photochemical Oxidants and Precursors, EPA-450/2-77-21a, U.S. Environmental Protection Agency, Research Triangle Park, NC, November 1977.

2. Guidance for Collection of Ambient Non-Methane Organic Compound (NMOC) Data for Use in 1982 Ozone SIP Development, EPA-450/4-80-011, U.S. Environmental Protection Agency, Research Triangle Park, NC, June 1980.

3. H.B. Singh, Guidance for the Collection and Use of Ambient Hydrocarbons Species Data in Development of Ozone Control Strategies, EPA-450/4-80-008, U.S. Environmental Protection Agency, Research Triangle Park, NC, April 1980.

4. R.M. Riggin, Technical Assistance Document for Sampling and Analysis of Toxic Organic Compounds in Ambient Air, EPA-600/4-83-027, U.S. Environmental Protection Agency, Research Triangle Park, NC, 1983.

5. M.J. Jackson, et al., Technical Assistance Document for Assembly and Operation of the Suggested Preconcentration Direct Flame Ionization Detection (PDFID) Analytical System, publication scheduled for late 1987; currently available in draft form from the Quality Assurance Division, MD-77, U.S. Environmental Protection Agency, Research Triangle Park, NC 27711.

6. R.K.M. Jayanty, et al., Laboratory Evaluation of Non-Methane Organic Carbon Determination in Ambient Air by Cryogenic Preconcentration and Flame Ionization Detection, EPA-600/54-82-019, U.S. Environmental Protection Agency, Research Triangle Park, NC, July 1982.

7. R.D. Cox, et al., "Determination of Low Levels of Total Non-Methane Hydrocarbon Content in Ambient Air," Environ. Sci. Technol., 16 (1):57. 1982.

8. F.F. McElroy, et al., A Cryogenic Preconcentration - Direct FID (PDFID) Method for Measurement of NMOC in the Ambient Air, EPA-600/4-85-063, U.S. Environmental Protection Agency, Research Triangle Park, NC, August 1985.

9. F.W. Sexton, et al., A Comparative Evaluation of Seven Automated Ambient Non-Methane Organic Compound Analyzers, EPA-600/54-82-046, U.S. Environmental Protection Agency, Research Triangle Park, NC, August 1982.

10. H.G. Richter, Analysis of Organic Compound Data Gathered During 1980 in Northeast Corridor Cities, EPA-450/4-83-017, U.S. Environmental Protection Agency, Research Triangle Park, NC, April 1983.

11. Cox, R.D. "Sample Collection and Analytical Techniques for Volatile Organics in Air," presented at APCA Specialty Conference, Chicago, IL, March 22-24, 1983.

12. Rasmussen, R.A. and Khalil, M.A.K. "Atmospheric Halocarbons: Measurements and Analyses of Selected Trace Gases," Proc. NATO ASI on Atmospheric Ozone, 1980, 209-231.

13. Oliver, K.D., Pleil, J.D. and McClenny, W.A. "Sample Integrity of Trace Level Volatile Organic Compounds in Ambient Air Stored in "SUMMA®" Polished Canisters," accepted for publication in Atmospheric Environment as of January 1986. Draft available from W.A. McClenny, MD-44, EMSL, EPA, Research Triangle Park, NC 27711.

14. McClenny, W.A. Pleil, J.D., Holdren, J.W. and Smith, R.N.; 1984. "Automated Cryogenic Preconcentration and Gas Chromatographic Determination of Volatile Organic Compounds," Anal. Chem. 56:2947.

15. Pleil, J.D. and Oliver, K.D., 1985, "Evaluation of Various Configurations of Nafion Dryers: Water Removal from Air Samples Prior to Gas Chromatographic Analysis." EPA Contract No. 68-02-4035.

16. Oliver, K.D.; Pleil, J.D. and McClenny, W.A.; 1986. "Sample Integrity of Trace Level Volatile Organic Compounds in Ambient Air Stored in "SUMMA®" Polished Canisters," Atmospheric Environ. 20:1403.

17. Oliver, K.D. and Pleil, J.D., 1985, "Automated Cryogenic Sampling and Gas Chromatographic Analysis of Ambient Vapor-Phase Organic Compounds: Procedures and Comparison Tests," EPA Contract No. 68-02-4035, Research Triangle Park, NC, Northrop Services, Inc. - Environmental Sciences.

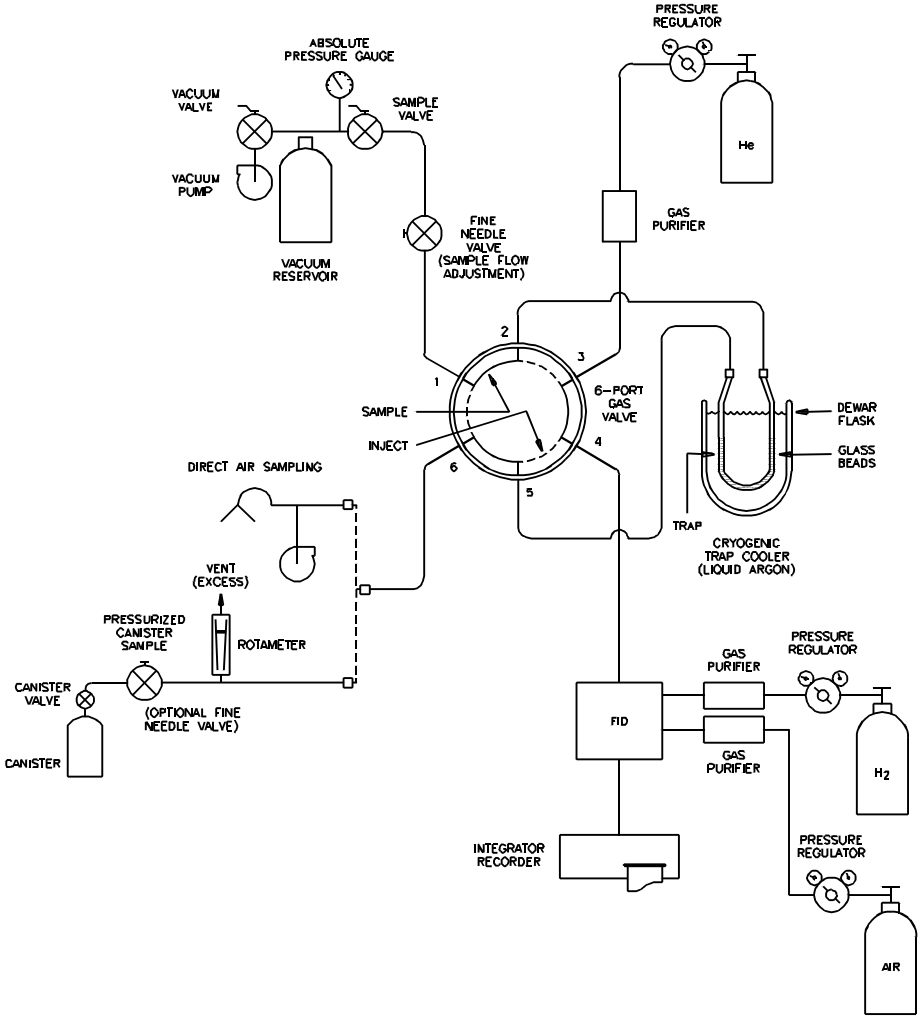

FIGURE 1. SCHEMATIC OF ANALYTICAL SYSTEM FOR NMOC-TWO SAMPLING MODES

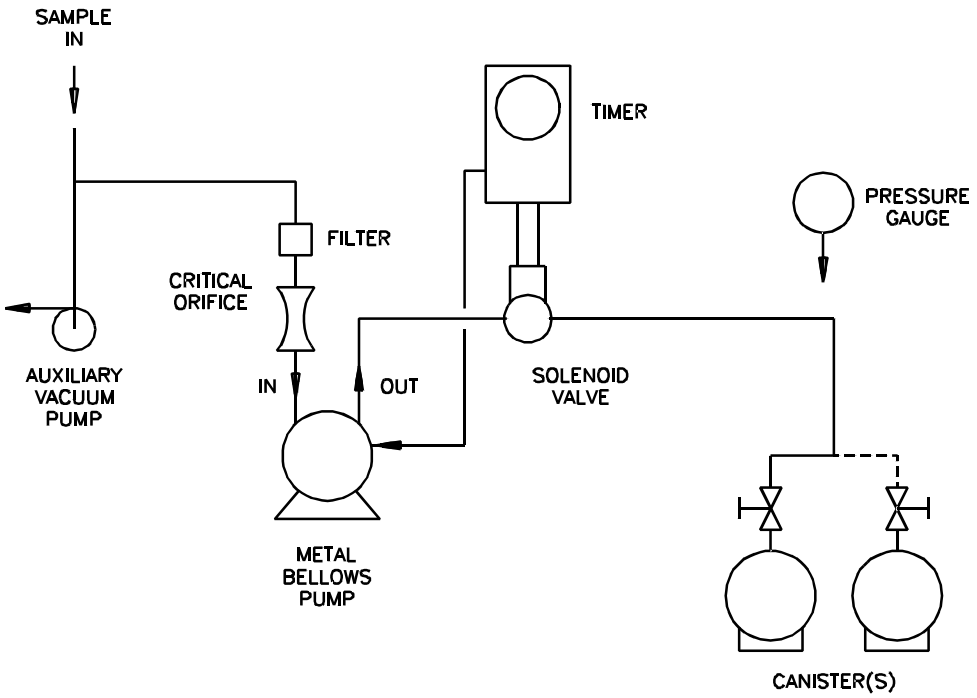

FIGURE 2. SAMPLE SYSTEM FOR AUTOMATIC COLLECTION
OF 3-HOUR INTEGRATED AIR SAMPLES

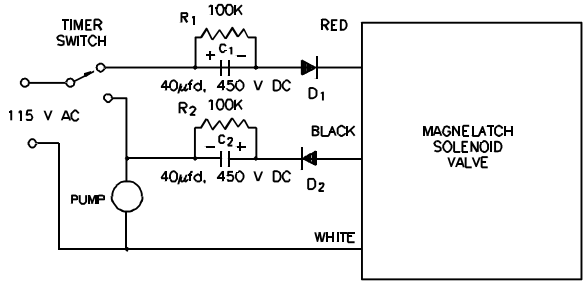

COMPONENTS

Capacitor C_1 and C_2 – 40 μf, 450 VDC (Sprague Atom® TVA 1712 or equivalent)
Register R_1 and R_2 – 0.5 watt, 5% tolerance
Diode D_1 and D_2 – 1000 PRV, 2.5 A (RCA, SK 3081 or equivalent)

FIGURE 3[a]. SIMPLE CIRCUIT FOR OPERATING MAGNELATCH VALVE

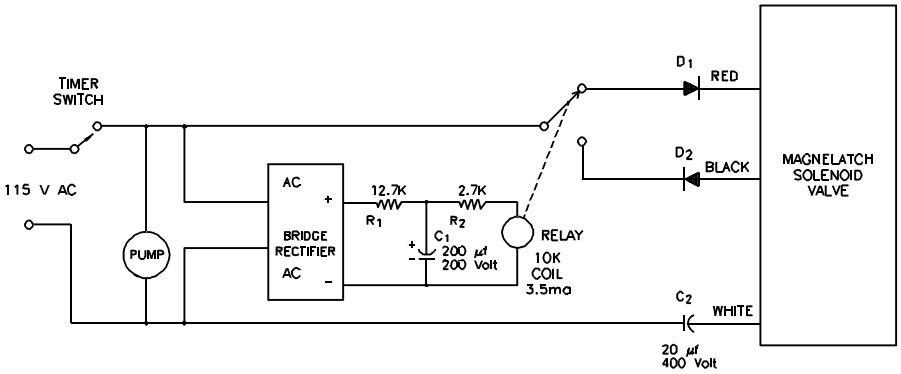

COMPONENTS

Bridge Rectifier – 200 PRV, 1.5 A (RCA, SK 3105 or equivalent)
Diode D_1 and D_2 – 1000 PRV, 2.5 A (RCA, SK 3081 or equivalent)
Capacitor C_1 – 200 μf, 250 VDC (Sprague Atom® TVA 1528 or equivalent)
Capacitor C_2 – 20 μf, 400 VDC Non-Polarized (Sprague Atom® TVAN 1652 or equivalent)
Relay – 10,000 ohm coil, 3.5 ma (AMF Potter and Brumfield, KCP 5, or equivalent)
Resistor R_1 and R_2 – 0.5 watt, 5% tolerance

FIGURE 3[b]. IMPROVED CIRCUIT DESIGNED TO HANDLE POWER INTERRUPTIONS

FIGURE 3. ELECTRICAL PULSE CIRCUITS FOR DRIVING SKINNER MAGNELATCH SOLENOID VALVE WITH A MECHANICAL TIMER

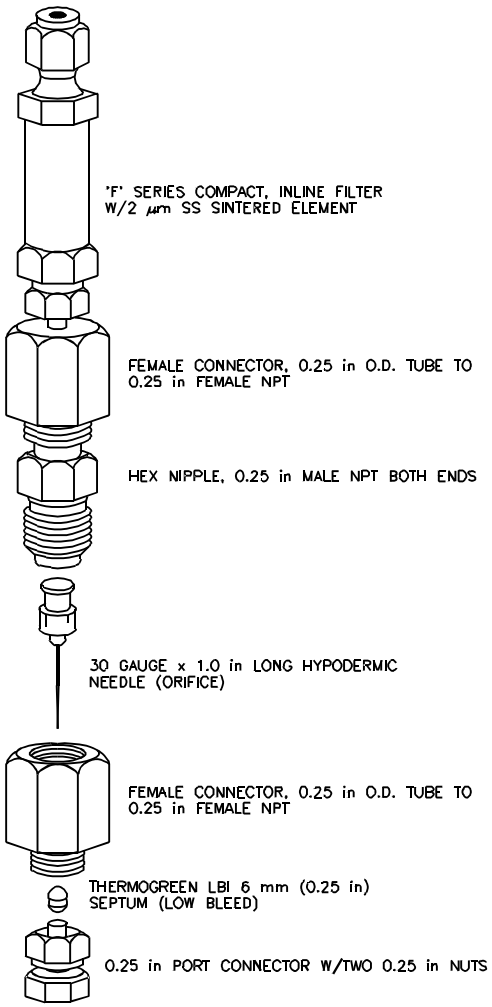

FIGURE 4. FILTER AND HYPODERMIC NEEDLE ASSEMBLY FOR SAMPLE INLET FLOW CONTROL

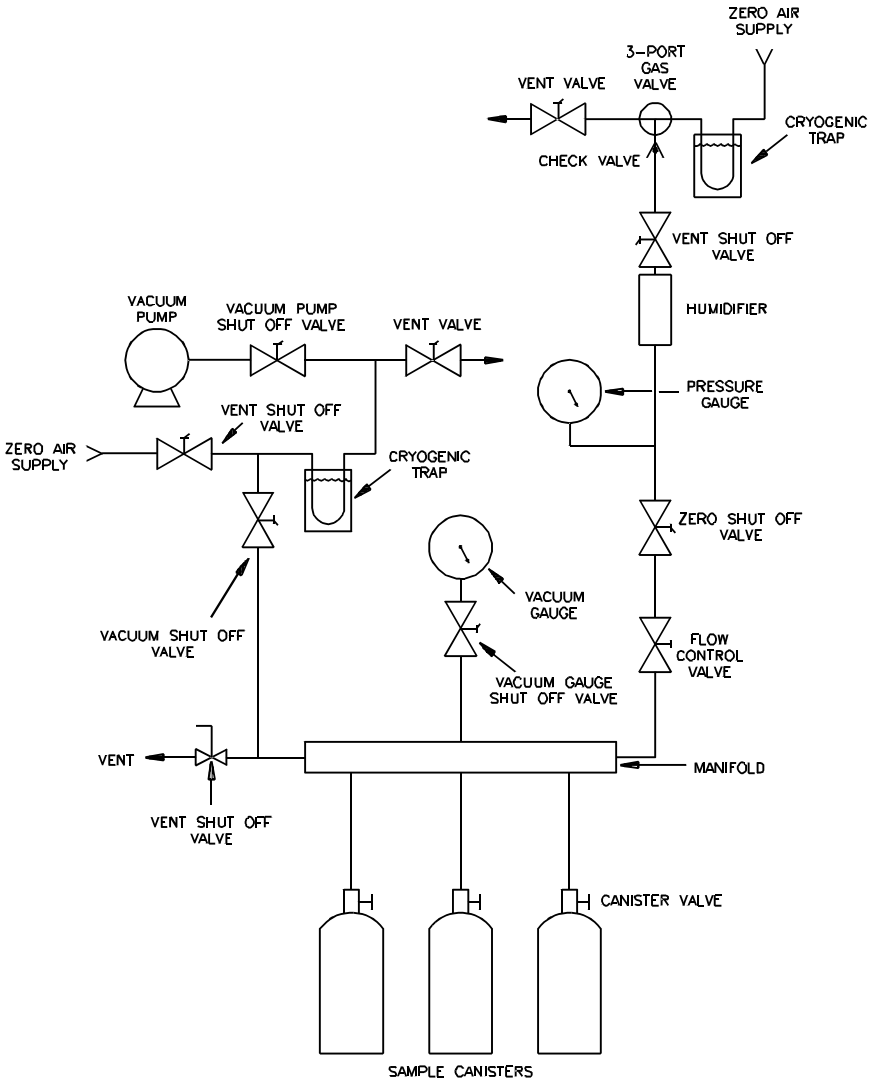

FIGURE 5. CANISTER CLEANING SYSTEM

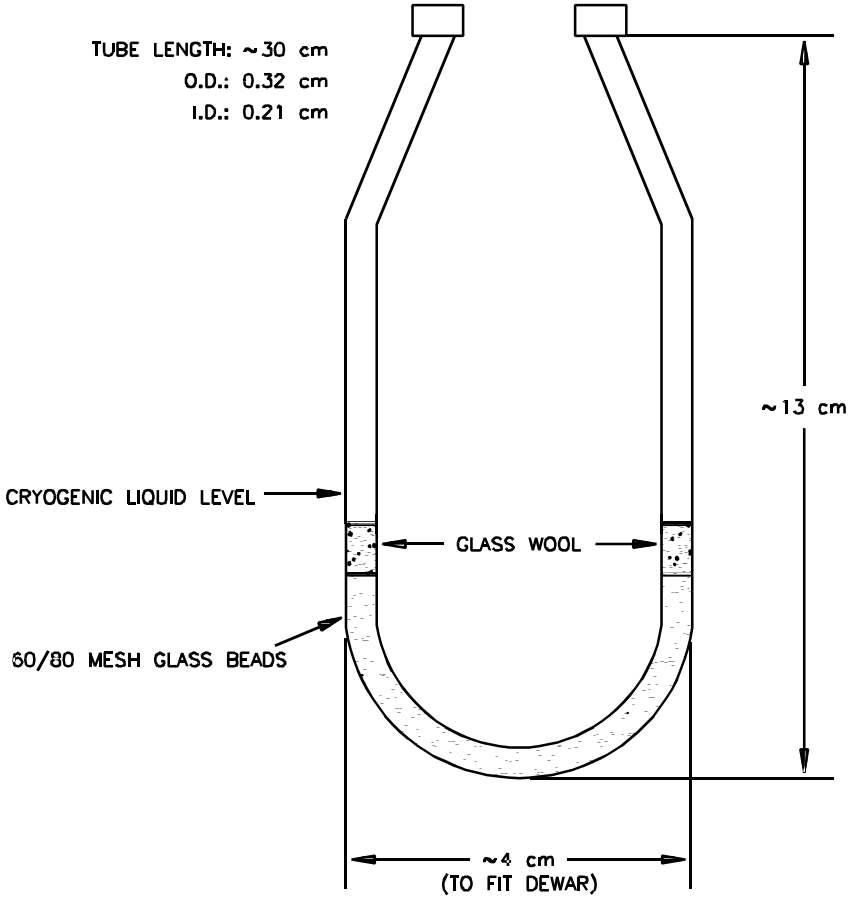

FIGURE 6. CRYOGENIC SAMPLE TRAP DIMENSIONS

PRESSURIZED CANISTER SAMPLING DATA SHEET

GENERAL INFORMATION:

PROJECT:_____
SITE:_____
LOCATION:_____
MONITOR STATION NUMBER:_____
PUMP SERIAL NUMBER:_____

OPERATOR:_____
ORIFICE IDENTIFICATION:_____
FLOW RATE:_____
CALIBRATED BY:_____
LEAK CHECK _____ _____
Pass Fail

FIELD DATA:

Date	Canister Serial Number	Sample Number	Sample Time		Average Atmospheric Conditions			Canister pressure Final, Laboratory		Comments
			Start	Stop	Temperature	Pressure	Relative Humidity			

_____ _____ _____

Date Title Signature

FIGURE 7. EXAMPLE SAMPLING DATA SHEET

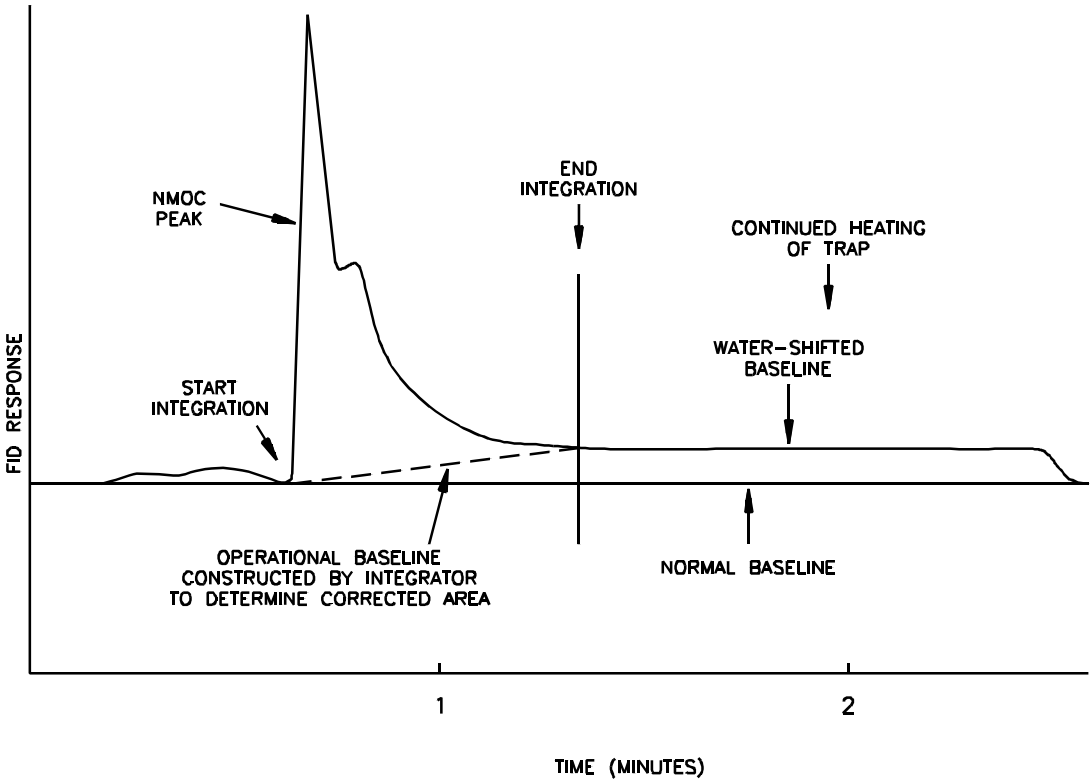

FIGURE 8. CONSTRUCTION OF OPERATIONAL BASELINE AND CORRESPONDING CORRECTION OF PEAK AREA

EPA/625/R-96/010b

Compendium of Methods for the Determination of Toxic Organic Compounds in Ambient Air

Second Edition

Compendium Method TO-13A

Determination of Polycyclic Aromatic Hydrocarbons (PAHs) in Ambient Air Using Gas Chromatography/Mass Spectrometry (GC/MS)

Center for Environmental Research Information
Office of Research and Development
U.S. Environmental Protection Agency
Cincinnati, OH 45268

January 1999

Method TO-13A
Acknowledgements

This Method was prepared for publication in the *Compendium of Methods for the Determination of Toxic Organic Compounds in Ambient Air, Second Edition* (EPA/625/R-96/010b), under Contract No. 68-C3-0315, WA No. 3-10, by Midwest Research Institute (MRI), as a subcontractor to Eastern Research Group, Inc. (ERG), and under the sponsorship of the U.S. Environmental Protection Agency (EPA). Justice A. Manning, John O. Burckle, and Scott R. Hedges, Center for Environmental Research Information (CERI), and Frank F. McElroy, National Exposure Research Laboratory (NERL), all in the EPA Office of Research and Development (ORD), were responsible for overseeing the preparation of this method. Additional support was provided by other members of the Compendia Workgroup, which include:

- John O. Burckle, U.S. EPA, ORD, Cincinnati, OH
- James L. Cheney, Corps of Engineers, Omaha, NB
- Michael Davis, U.S. EPA, Region 7, KC, KS
- Joseph B. Elkins Jr., U.S. EPA, OAQPS, RTP, NC
- Robert G. Lewis, U.S. EPA, NERL, RTP, NC
- Justice A. Manning, U.S. EPA, ORD, Cincinnati, OH
- William A. McClenny, U.S. EPA, NERL, RTP, NC
- Frank F. McElroy, U.S. EPA, NERL, RTP, NC
- Heidi Schultz, ERG, Lexington, MA
- William T. "Jerry" Winberry, Jr., EnviroTech Solutions, Cary, NC

Method TO-13 was originally published in March of 1989 as one of a series of peer-reviewed methods in the second supplement to *Compendium of Methods for the Determination of Toxic Organic Compounds in Ambient Air*, EPA 600/4-89-018. In an effort to keep these methods consistent with current technology, Method TO-13 has been revised and updated as Method TO-13A in this Compendium to incorporate new or improved sampling and analytical technologies.

This method is the result of the efforts of many individuals. Gratitude goes to each person involved in the preparation and review of this methodology.

Author(s)

- William T. "Jerry" Winberry, Jr., EnviroTech Solutions, Cary, NC
- Greg Jungclaus, Midwest Research Institute, Kansas City, MO

Peer Reviewers

- Nancy Wilson, U.S. EPA, NERL, RTP, NC
- Joan Bursey, ERG, Morrisville, NC
- Irene D. DeGraff, Supelco, Bellefonte, PA
- Jane Chuang, Battelle Laboratories, Cincinnati, OH
- Robert G. Lewis, U.S. EPA, NERL, RTP, NC
- Lauren Drees, U.S. EPA, NRMRL, Cincinnati, OH

Finally, recognition is given to Frances Beyer, Lynn Kaufman, Debbie Bond, Cathy Whitaker, and Kathy Johnson of Midwest Research Institute's Administrative Services staff whose dedication and persistence during the development of this manuscript has enabled its production.

DISCLAIMER

This Compendium has been subjected to the Agency's peer and administrative review, and it has been approved for publication as an EPA document. Mention of trade names or commercial products does not constitute endorsement or recommendation for use.

This page intentionally left blank

METHOD TO-13A

Determination of Polycyclic Aromatic Hydrocarbons (PAHs)
in Ambient Air Using Gas Chromatography/Mass Spectrometry (GC/MS)

TABLE OF CONTENTS

Page

1. Scope 13A-1

2. Summary of Method 13A-2

3. Significance 13A-3

4. Applicable Documents 13A-3
   4.1 ASTM Standards 13A-3
   4.2 EPA Documents 13A-3
   4.3 Other Documents 13A-4

5. Definitions 13A-4

6. Limitations and Interferences 13A-5
   6.1 Limitations 13A-5
   6.2 Interferences 13A-6

7. Safety 13A-6

8. Apparatus 13A-7
   8.1 Sampling 13A-7
   8.2 Sample Clean-Up and Concentration 13A-8
   8.3 Sample Analysis 13A-9

9. Equipment and Materials 13A-10
   9.1 Materials for Sample Collection 13A-10
   9.2 Sample Clean-up and Concentration 13A-11
   9.3 GC/MS Sample Analysis 13A-11

10. Preparation of PUF Sampling Cartridge 13A-12
   10.1 Summary of Method 13A-12
   10.2 Preparation of Sampling Cartridge 13A-12
   10.3 Procedure for Certification of PUF Cartridge Assembly 13A-13
   10.4 Deployment of Cartridges for Field Sampling 13A-14

11. Assembly, Calibration, and Collection Using Sampling System 13A-15
   11.1 Sampling Apparatus 13A-15
   11.2 Calibration of Sampling System 13A-15
   11.3 Sample Collection 13A-22

TABLE OF CONTENTS, CONTINUED

Page

12. Sample Extraction, Concentration, and Cleanup 13A-23
    12.1 Sample Identification 13A-23
    12.2 Soxhlet Extraction and Concentration 13A-24
    12.3 Sample Cleanup 13A-25

13. Gas Chromatography with Mass Spectrometry Detection 13A-26
    13.1 General 13A-26
    13.2 Calibration of GC/MS/DS 13A-26
    13.3 GC/MS Instrument Operating Conditions 13A-29
    13.4 Sample Analysis by GC/MS 13A-37

14. Quality Assurance/Quality Control (QA/QC) 13A-41
    14.1 General System QA/QC 13A-41
    14.2 Process, Field, and Solvent Blanks 13A-42

15. References 13A-42

METHOD TO-13A

Determination of Polycyclic Aromatic Hydrocarbons (PAHs) in Ambient Air Using Gas Chromatography/Mass Spectrometry (GC/MS)

1. Scope

1.1 Polycyclic aromatic hydrocarbons (PAHs) have received increased attention in recent years in air pollution studies because some of these compounds are highly carcinogenic or mutagenic. In particular, benzo[a]pyrene (B[a]P) has been identified as being highly carcinogenic. To understand the extent of human exposure to B[a]P and other PAHs, reliable sampling and analytical methods are necessary. This document describes a sampling and analysis procedure for common PAHs involving the use of a combination of quartz filter and sorbent cartridge with subsequent analysis by gas chromatography with mass spectrometry (GC/MS) detection. The analytical methods are modifications of EPA Test Method 610 and 625, *Methods for Organic Chemical Analysis of Municipal and Industrial Wastewater*, and Methods 8000, 8270, and 8310, *Test Methods for Evaluation of Solid Waste*.

1.2 Fluorescence methods were among the very first methods used for detection of B[a]P and other PAHs as carcinogenic constituents of coal tar (1-7). Fluorescence methods are capable of measuring subnanogram quantities of PAHs, but tend to be fairly non-selective. The normal spectra obtained are often intense and lack resolution. Efforts to overcome this difficulty led to the use of ultraviolet (UV) absorption spectroscopy (8) as the detection method coupled with pre-speciated techniques involving liquid chromatography (LC) and thin layer chromatography (TLC) to isolate specific PAHs, particularly B[a]P. As with fluorescence spectroscopy, the individual spectra for various PAHs are unique, although portions of spectra for different compounds may be the same. As with fluorescence techniques, the possibility of spectral overlap requires complete separation of sample components to ensure accurate measurement of component levels. Hence, the use of UV absorption coupled with pre-speciation involving LC and TLC and fluorescence spectroscopy declined and was replaced with the more sensitive high performance liquid chromatography (HPLC) with UV/fluorescence detection (9) or highly sensitive and specific gas chromatography/mass spectrometry (GC/MS) for detection (10-11).

1.3 The choice of GC/MS as the recommended procedure for analysis of B[a]P and other PAHs was influenced by its sensitivity and selectivity, along with its ability to analyze complex samples.

1.4 The analytical methodology has consequently been defined, but the sampling procedures can reduce the validity of the analytical results. Recent studies (12-17) have indicated that non-volatile PAHs (vapor pressure $<10^{-8}$ mm Hg) may be trapped on the filter, but post-collection volatilization problems may distribute the PAHs downstream of the filter to the back-up sorbent. A wide variety of sorbents such as Tenax®, XAD-2® and polyurethane foam (PUF) have been used to sample common PAHs. All sorbents have demonstrated high collection efficiency for B[a]P in particular. In general, XAD-2® resin has a higher collection efficiency (18-21) for volatile PAHs than PUF, as well as a higher retention efficiency. PUF cartridges, however, are easier to handle in the field and maintain better flow characteristics during sampling. Likewise, PUF has demonstrated (22) its capability in sampling organochlorine pesticides, polychlorinated biphenyls (22), and polychlorinated dibenzo-p-dioxins (23). PUF also has demonstrated a lower recovery efficiency and storage capability for naphthalene than XAD-2®. There have been no significant losses of PAHs up to 30 days of storage at room temperature (23°C) using XAD-2®. It also appears that XAD-2® resin has a higher collection efficiency for volatile PAHs than PUF, as well as a higher retention efficiency for both volatile and reactive PAHs.

Consequently, while the literature cites weaknesses and strengths of using either XAD-2® or PUF, this method includes the utilization of PUF as the primary sorbent.

1.5 This method includes the qualitative and quantitative analysis of the following PAHs (see Figure 1) specifically by utilizing PUF as the sorbent followed by GC/MS analysis:

Acenaphthene (low collection efficiency; see Section 6.1.3)
Acenaphthylene (low collection efficiency; see Section 6.1.3)
Anthracene
Benz(a)anthracene
Benzo(a)pyrene
Benzo(e)pyrene
Benzo(g,h,i)perylene
Benzo(k)fluoranthene
Chrysene
Coronene
Dibenz(a,h)anthracene
Fluoranthene
Fluorene
Benzo(b)fluoranthene
Indeno(1,2,3-cd)pyrene
Naphthalene (low collection efficiency; see Section 6.1.3)
Phenanthrene
Pyrene
Perylene

The GC/MS method is applicable to the determination of PAHs compounds involving three member rings or higher. Naphthalene, acenaphthylene, and acenaphthene have only ~35 percent recovery when using PUF as the sorbent. Nitro-PAHs have *not* been fully evaluated using this procedure; therefore, they are not included in this method.

1.6 With optimization to reagent purity and analytical conditions, the detection limits for the GC/MS method range from 1 ng to 10 pg based on field experience.

2. Summary of Method

2.1 Filters and sorbent cartridges (containing PUF or XAD-2®) are cleaned in solvents and vacuum dried. The filters and sorbent cartridges are stored in screw-capped jars wrapped in aluminum foil (or otherwise protected from light) before careful installation on the sampler.

2.2 Approximately 300 m^3 of air is drawn through the filter and sorbent cartridge using a high-volume flow rate air sampler or equivalent.

2.3 The amount of air sampled through the filter and sorbent cartridge is recorded, and the filter and cartridge are placed in an appropriately labeled container and shipped along with blank filter and sorbent cartridges to the analytical laboratory for analysis.

2.4 The filters and sorbent cartridge are extracted by Soxhlet extraction with appropriate solvent. The extract is concentrated by Kuderna-Danish (K-D) evaporator, followed by silica gel cleanup using column chromatography to remove potential interferences prior to analysis by GC/MS.

2.5 The eluent is further concentrated by K-D evaporation, then analyzed by GC/MS. The analytical system is verified to be operating properly and calibrated with five concentration calibration solutions.

2.6 A preliminary analysis of the sample extract is performed to check the system performance and to ensure that the samples are within the calibration range of the instrument. If the preliminary analysis indicates non-performance, then recalibrate the instrument, adjust the amount of the sample injected, adjust the calibration solution concentration, and adjust the data processing system to reflect observed retention times, etc.

2.7 The samples and the blanks are analyzed and used (along with the amount of air sampled) to calculate the concentration of PAHs in the air sample**.**

3. Significance

3.1 As discussed in Section 1, several documents have been published that describe sampling and analytical approaches for common PAHs. The attractive features of these methods have been combined in this procedure. Although this method has been validated in the laboratory, one must use caution when employing it for specific applications.

3.2 Because of the relatively low levels of common PAHs in the environment, the methodology suggest the use of high volume (0.22 m^3/min) sampling technique to acquire sufficient sample for analysis. However, the volatility of certain PAHs prevents efficient collection on filter media alone. Consequently, this method utilizes both a filter and a backup sorbent cartridge, which provides for efficient collection of most PAHs involving three member rings or higher.

4. Applicable Documents

4.1 ASTM Standards

- **Method D1356** *Definitions of Terms Relating to Atmospheric Sampling and Analysis*.
- **Method 4861-94** *Standard Practice for Sampling and Analysis of Pesticides and Polychlorinated Biphenyl in Air*
- **Method E260** *Recommended Practice for General Gas Chromatography Procedures*.
- **Method E355** *Practice for Gas Chromatography Terms and Relationships*.
- **Method E682** *Practice for Liquid Chromatography Terms and Relationships*.

4.2 EPA Documents

- *Technical Assistance Document for Sampling and Analysis of Toxic Organic Compounds in Ambient Air*, U. S. Environmental Protection Agency, EPA-600/4-83-027, June 1983.
- *Quality Assurance Handbook for Air Pollution Measurement Systems*, U. S. Environmental Protection Agency, EPA-600/R-94-038b, May 1994.
- *Compendium of Methods for the Determination of Toxic Organic Compounds in Ambient Air: Method TO-13, Second Supplement*, U. S. Environmental Protection Agency, EPA-600/-4-89-018, March 1989.

4.3 Other Documents

- Existing Procedures (24-32).
- Ambient Air Studies (33-50).
- General Metal Works, Inc., "Operating Procedures for Model PS-1 Sampler," Village of Cleves, OH 45002 (800-543-7412).
- Illinois Environmental Protection Agency, Division of Air Quality, "Chicago Air Quality: PCB Air Monitoring Plan (Phase 2)," Chicago, IL, IEAP/APC/86/011, April 1986.
- Thermo Environmental, Inc. (formerly Wedding and Associates), "Operating Procedures for the Thermo Environmental Semi-Volatile Sampler," 8 West Forge Parkway, Franklin, MA 02038 (508-520-0430).
- American Chemical Society (ACS), "Sampling for Organic Chemicals in Air," *ACS Professional Book*, ACS, Washington, D.C., 1996.
- International Organization for Standardization (ISO), "Determination of Gas and Particle-Phase Polynuclear Aromatic Hydrocarbons in Ambient Air - Collected on Sorbent-Backed Filters with Gas Chromatographic/Mass Spectrometric Analysis," ISO/TC 146/SC 3/WG 17N, Case Postale 56, CH-1211, Genève 20, Switzerland.

5. Definitions

[Note: Definitions used in this document and in any user-prepared standard operating procedures (SOPs) should be consistent with ASTM Methods D1356, E260, and E255. All abbreviations and symbols are defined within this document at point of use.]

5.1 Retention time (RT)-time to elute a specific chemical from a chromatographic column. For a specific carrier gas flow rate, RT is measured from the time the chemical is injected into the gas stream until it appears at the detector.

5.2 Sampling efficiency (SE)-ability of the sampler to trap and retain PAHs. The %SE is the percentage of the analyte of interest collected and retained by the sampling medium when it is introduced into the air sampler and the sampler is operated under normal conditions for a period of time equal to or greater than that required for the intended use.

5.3 Dynamic retention efficiency-ability of the sampling medium to retain a given PAH that has been added to the sorbent trap in a spiking solution when air is drawn through the sampler under normal conditions for a period of time equal to or greater than that required for the intended use.

5.4 Polycyclic aromatic hydrocarbons (PAHs)-two or more fused aromatic rings.

5.5 Method detection limit (MDL)-the minimum concentration of a substance that can be measured and reported with confidence and that the value is above zero.

5.6 Kuderna-Danish apparatus-the Kuderna-Danish (K-D) apparatus is a system for concentrating materials dissolved in volatile solvents.

5.7 MS-SCAN-the GC is coupled to a mass spectrometer where the instrument is programmed to acquire all ion data.

5.8 Sublimation-the direct passage of a substance from the solid state to the gaseous state and back into the solid form without at any time appearing in the liquid state. Also applied to the conversion of solid to vapor without the later return to solid state, and to a conversion directly from the vapor phase to the solid state.

5.9 Surrogate standard-a chemically inert compound (not expected to occur in the environmental sample) that is added to each sample, blank, and matrix-spiked sample before extraction and analysis. The recovery of the surrogate standard is used to monitor unusual matrix effects, gross sample processing errors, etc. Surrogate recovery is evaluated for acceptance by determining whether the measured concentration falls within acceptable limits.

5.10 CAL-calibration standards are defined as five levels of calibration: CAL 1, CAL 2, CAL 3, CAL 4, and CAL 5. CAL 1 is the lowest concentration and CAL 5 is the highest concentration. CAL 3, which is the mid-level standard, is designated as the solution to be used for continuing calibrations.

5.11 Continuing calibration check-a solution of method analytes used to evaluate the mass spectrometer response over a period of time. A continuing calibration check (CCC) is performed once each 12-hour period. The CCC solution (CAL 3) is the standard of the calibration curve.

5.12 GC Response (A_x)-the peak area or height of analyte, x.

5.13 Internal standard (IS)-a compound added to a sample extract in known amounts and used to calibrate concentration measurements of other compounds that are sample components. The internal standard must be a compound that is not a sample component.

6. Limitations and Interferences

6.1 Limitations

6.1.1 PAHs span a broad spectrum of vapor pressures (e.g., from 1.1 x 10^{-2} kPa for naphthalene to 2 x 10^{-13} kPa for coronene at 25°C). PAHs that are frequently found in ambient air are listed in Table 1. Those with vapor pressures above approximately 10^{-8} kPa will be present in the ambient air substantially distributed between the gas and particulate phases. This method will permit the collection of both phases.

6.1.2 Particulate-phase PAHs will tend to be lost from the particle filter during sampling due to volatilization. Therefore, separate analysis of the filter will not reflect the concentrations of the PAHs originally associated with particles, nor will analysis of the sorbent provide an accurate measure of the gas phase. Consequently, this method calls for *extraction of the filter and sorbent together* to permit accurate measurement of total PAH air concentrations.

6.1.3 Naphthalene, acenaphthylene, and acenaphthene possess relatively high vapor pressures and may not be efficiently trapped by this method when using PUF as the sorbent. The sampling efficiency for naphthalene has been determined to be about 35 percent for PUF. The user is encouraged to use XAD-2® as the sorbent if these analytes are part of the target compound list (TCL**).**

6.2 Interferences

6.2.1 Method interferences may be caused by contaminants in solvents, reagents, glassware, and other sample processing hardware that result in discrete artifacts and/or elevated baselines in the detector profiles. All of these materials must be routinely demonstrated to be free from interferences under the conditions of the analysis by running laboratory reagent blanks.

6.2.2 Glassware must be scrupulously cleaned (51). All glassware should be cleaned as soon as possible after use by rinsing with the last solvent used in it and then high-purity acetone and hexane. These rinses should be followed by detergent washing with hot water and rinsing with copious amounts of tap water and several portions of reagent water. The glassware should then be drained dry and heated in a muffle furnace at 400ºC for four hours. Volumetric glassware must not be heated in a muffle furnace; rather it should be solvent rinsed with acetone and spectrographic grade hexane. After drying and rinsing, glassware should be sealed and stored in a clean environment to prevent any accumulation of dust or other contaminants. Glassware should be stored inverted or capped with aluminum foil.

[Note: The glassware may be further cleaned by placing in a muffle furnace at 450°C for 8 hours to remove trace organics.]

6.2.3 The use of high purity water, reagents, and solvents helps to minimize interference problems. Purification of solvents by distillation in all-glass systems may be required.

6.2.4 Matrix interferences may be caused by contaminants that are coextracted from the sample. Additional clean-up by column chromatography may be required (see Section 12.3).

6.2.5 During sample transport and analysis, heat, ozone, NO_2, and ultraviolet (UV) light may cause sample degradation. Incandescent or UV-shielded fluorescent lighting in the laboratory should be used during analysis.

6.2.6 The extent of interferences that may be encountered using GC/MS techniques has not been fully assessed. Although GC conditions described allow for unique resolution of the specific PAH compounds covered by this method, other PAH compounds may interfere. The use of column chromatography for sample clean-up prior to GC analysis will eliminate most of these interferences. The analytical system must, however, be routinely demonstrated to be free of internal contaminants such as contaminated solvents, glassware, or other reagents which may lead to method interferences. A laboratory reagent blank should be analyzed for each reagent used to determine if reagents are contaminant-free.

6.2.7 Concern about sample degradation during sample transport and analysis was mentioned above. Heat, ozone, NO_2, and ultraviolet (UV) light also may cause sample degradation. These problems should be addressed as part of the user-prepared standard operating procedure (SOP) manual. Where possible, incandescent or UV-shielded fluorescent lighting should be used during analysis. During transport, field samples should be shipped back to the laboratory chilled (~4°C) using blue ice/dry ice.

7. Safety

7.1 The toxicity or carcinogenicity of each reagent used in this method has not been precisely defined; however, each chemical compound should be treated as a potential health hazard. From this viewpoint, exposure to these chemicals must be reduced to the lowest possible level by whatever means available. The laboratory is responsible for maintaining a current awareness file of Occupational Safety and Health Administration (OSHA) regulations regarding the safe handling of the chemicals specified in this method. A reference file of material safety data sheets (MSDSs) should also be made available to all personnel involved in the chemical analysis. Additional references to laboratory safety are available and are included in the reference list (52-54).

7.2 B[a]P has been tentatively classified as a known or suspected, human or mammalian carcinogen. Many of the other PAHs have been classified as carcinogens. Care must be exercised when working with these substances. This method does not purport to address all of the safety problems associated with its use. It is the responsibility of whomever uses this method to consult and establish appropriate safety and health practices and determine the applicability of regulatory limitations prior to use. The user should be thoroughly familiar with the chemical and physical properties of targeted substances (see Table 1 and Figure 1).

7.3 All PAHs should be treated as carcinogens. Neat compounds should be weighed in a glove box. Spent samples and unused standards are toxic waste and should be disposed according to regulations. Counter tops and equipment should be regularly checked with "black light" for fluorescence as an indicator of contamination.

7.4 The sampling configuration (filter and backup sorbent) and collection efficiency for target PAHs has been demonstrated to be greater than 95 percent (except for naphthalene, acenaphthylene and acenaphthene). Therefore, no field recovery evaluation will be required as part of this procedure.

[Note: Naphthalene, acenaphthylene and acenaphthene have demonstrated significant breakthrough using PUF cartridges, especially at summer ambient temperatures. If naphthalene, acenaphthylene and acenaphthene are target PAHs, the user may want to consider replacing the PUF with XAD-2® in order to minimize breakthrough during sampling.]

8. Apparatus

[Note: This method was developed using the PS-1 semi-volatile sampler provided by General Metal Works, Village of Cleves, OH as a guideline. EPA has experience in the use of this equipment during various field-monitoring programs over the last several years. Other manufacturers' equipment should work as well; however, modifications to these procedures may be necessary if another commercially available sampler is selected.]

8.1 Sampling

8.1.1 High-volume sampler (see Figure 2). Capable of pulling ambient air through the filter/sorbent cartridge at a flow rate of approximately 8 standard cubic feet per minute (scfm) (0.225 std m^3/min) to obtain a total sample volume of greater than 300 m^3 over a 24-hour period. Major manufacturers are:

- Tisch Environmental, Village of Cleves, OH
- Andersen Instruments Inc., 500 Technology Ct., Smyrna, GA
- Thermo Environmental Instruments, Inc., 8 West Forge Parkway, Franklin, MA

Recent EPA studies have concluded that sample volumes *less than* 300 m^3 still collect enough PAHs on the filter/PUF for quantitation. The user is encouraged to investigate appropriate sample volume needed to meet project specific data quality objectives.

8.1.2 Sampling module (see Figure 3). Metal filter holder (Part 2) capable of holding a 102-mm circular particle filter supported by a 16-mesh stainless-steel screen and attaching to a metal cylinder (Part 1) capable of holding a 65-mm O.D. (60-mm I.D.) x 125-mm borosilicate glass sorbent cartridge containing PUF or XAD-2®. The filter holder is equipped with inert sealing gaskets (e.g., polytetrafluorethylene) placed on either side of the

filter. Likewise, inert, pliable gaskets (e.g., silicone rubber) are used to provide an air-tight seal at each end of the glass sorbent cartridge. The glass sorbent cartridge is indented 20 mm from the lower end to provide a support for a 16-mesh stainless-steel screen that holds the sorbent. The glass sorbent cartridge fits into Part 1, which is screwed onto Part 2 until the sorbent cartridge is sealed between the silicone gaskets. Major manufacturers are:

- Tisch Environmental, Village of Cleves, OH
- Andersen Instruments Inc., 500 Technology Ct., Smyrna, GA
- Thermo Environmental Instruments, Inc., 8 West Forge Parkway, Franklin, MA

8.1.3 High-volume sampler calibrator. Capable of providing multipoint resistance for the high-volume sampler. Major manufacturers are**:**

- Tisch Environmental, Village of Cleves, OH
- Andersen Instruments Inc., 500 Technology Ct., Smyrna, GA
- Thermo Environmental Instruments, Inc., 8 West Forge Parkway, Franklin, MA

8.1.4 Ice chest. To hold samples at 4°C or below during shipment to the laboratory after collection.

8.1.5 Data sheets. Used for each sample to record the location and sample time, duration of sample, starting time, and volume of air sampled.

8.2 Sample Clean-Up and Concentration (see Figure 4).

8.2.1 Soxhlet apparatus extractor (see Figure 4a). Capable of extracting filter and sorbent cartridges (5.75-cm x 12.5-cm length), 1,000 mL flask, and condenser, best source.

8.2.2 Pyrex glass tube furnace system. For activating silica gel at 180°C under purified nitrogen gas purge for an hour, with capability of raising temperature gradually, best source.

8.2.3 Glass vial. 40 mL, best source.

8.2.4 Erlenmeyer flask. 50 mL, best source.

[Note: Reuse of glassware should be minimized to avoid the risk of cross contamination. All glassware that is used must be scrupulously cleaned as soon as possible after use. Rinse glassware with the last solvent used in it and then with high-purity acetone and hexane. Wash with hot water containing detergent. Rinse with copious amounts of tap water and several portions of distilled water. Drain, dry, and heat in a muffle furnace at 400°C for 4 hours. Volumetric glassware must not be heated in a muffle furnace; rather, it should be rinsed with high-purity acetone and hexane. After the glassware is dry and cool, rinse it with hexane, and store it inverted or capped with solvent-rinsed aluminum foil in a clean environment.]

8.2.5 White cotton gloves. For handling cartridges and filters, best source.

8.2.6 Minivials. 2 mL, borosilicate glass, with conical reservoir and screw caps lined with Teflon®-faced silicone disks, and a vial holder, best source.

8.2.7 Teflon®-coated stainless steel spatulas and spoons. Best source.

8.2.8 Kuderna-Danish (K-D) apparatus (see Figure 4b). 500 mL evaporation flask (Kontes K-570001-500 or equivalent), 10 mL graduated concentrator tubes (Kontes K570050-1025 or equivalent) with ground-glass stoppers, 1 mL calibrated K-D concentration tubes, and 3-ball macro Snyder Column (Kontes K-570010500, K-50300-0121, and K-569001-219, or equivalent), best source.

8.2.9 Adsorption column for column chromatography (see Figure 4c). 1-cm x 10-cm with stands.

8.2.10 Glove box. For working with extremely toxic standards and reagents with explosion-proof hood for venting fumes from solvents, reagents, etc.

8.2.11 Vacuum oven. Vacuum drying oven system capable of maintaining a vacuum at 240 torr (flushed with nitrogen) overnight.

8.2.12 Concentrator tubes and a nitrogen evaporation apparatus with variable flow rate. Best source.

8.2.13 Laboratory refrigerator. Best source.

8.2.14 Boiling chips. Solvent extracted, 10/40 mesh silicon carbide or equivalent, best source.

8.2.15 Water bath. Heated, with concentric ring cover, capable of ±5°C temperature control, best source.

8.2.16 Nitrogen evaporation apparatus. Best source.

8.2.17 Glass wool. High grade, best source.

8.3 Sample Analysis

8.3.1 Gas Chromatography with Mass Spectrometry Detection Coupled with Data Processing System (GC/MS/DS). The gas chromatograph must be equipped for temperature programming, and all required accessories must be available, including syringes, gases, and a capillary column. The gas chromatograph injection port must be designed for capillary columns. The use of splitless injection techniques is recommended. On-column injection techniques can be used, but they may severely reduce column lifetime for nonchemically bonded columns. In this protocol, a 2 µL injection volume is used consistently to maximize auto sampler reproducibility. With some gas chromatograph injection ports, however, 1 µL injections may produce some improvement in precision and chromatographic separation. A 1 µL injection volume may be used if adequate sensitivity and precision can be achieved.

[Note: If 1 µL is used as the injection volume, the injection volumes for all extracts, blanks, calibration solutions and performance check samples must be 1 µL.]

All GC carrier gas lines must be constructed from stainless steel or copper tubing. Poly-tetrafluoroethylene (PTFE) thread sealants or flow controllers should only be used.

8.3.2 Gas chromatograph-mass spectrometer interface. The GC is usually coupled directly to the MS source. The interface may include a diverter valve for shunting the column effluent and isolating the mass spectrometer source. All components of the interface should be glass or glass-lined stainless steel. Glass can be deactivated by silanizing with dichorodimethylsilane. The interface components should be compatible with 320°C temperatures. Cold spots and/or active surfaces (adsorption sites) in the GC/MS interface can cause peak tailing and peak broadening. It is recommended that the GC column be fitted directly into the MS source. Graphite ferrules should be avoided in the gas chromatograph injection area since they may adsorb PAHs. Vespel® or equivalent ferrules are recommended.

8.3.3 Mass spectrometer. The MS should be operated in the full range data acquisition (SCAN) mode with a total cycle time (including voltage reset time) of one second or less (see Section 13.3.2). Operation of the MS in the SCAN mode allows monitoring of all ions, thus assisting with the identification of other PAHs beyond Compendium Method TO-13A target analyte list. In addition, operating in the SCAN mode assists the analyst with identification of possible interferences from non-target analytes due to accessibility of the complete mass spectrum in the investigative process. The MS must be capable of scanning from 35 to 500 amu every 1 sec or less, using 70 volts (nominal) electron energy in the electron impact (EI) ionization mode. The mass spectrometer must be capable of producing a mass spectrum for a 50 ng injection of decafluorotriphyenyl phosphine (DFTPP) which meets all of the response criteria (see Section 13.3.3). To ensure sufficient precision of mass spectral data, the MS scan rate must allow acquisition of at least five scans while a sample compound elutes from the GC. The

GC/MS system must be in a room with atmosphere demonstrated to be free of all potential contaminants which will interfere with the analysis. The instrument must be vented outside the facility or to a trapping system which prevents the release of contaminants into the instrument room.

8.3.4 Data system. A dedicated computer data system is employed to control the rapid multiple ion monitoring process and to acquire the data. Quantification data (peak areas or peak heights) and multi-ion detector (MID) traces (displays of intensities of each m/z being monitored as a function of time) must be acquired during the analyses. Quantifications may be reported based upon computer generated peak areas or upon measured peak heights (chart recording). The detector zero setting must allow peak-to-peak measurement of the noise on the baseline. The computer should have software that allows searching the GC/MS data file for ions of a specific mass and plotting such ion abundances versus time or scan number. This type of plot is defined as Selected Ion Current Profile (SICP). The software used must allow integrating the abundance in any SICP between specified time or scan number limits. The data system should be capable of flagging all data files that have been edited manually by laboratory personnel.

8.3.5 Gas chromatograph column. A fused silica DB-5 column (30 m x 0.32 mm I.D.) crosslinked 5 percent phenyl methylsilicone, 1.0 µm film thickness is utilized to separate individual PAHs. Other columns may be used for determination of PAHs. Minimum acceptance criteria must be determined as per Section 13.3. At the beginning of each 12-hour period (after mass resolution has been demonstrated) during which sample extracts or concentration calibration solutions will be analyzed, column operating conditions must be attained for the required separation on the column to be used for samples.

8.3.6 Balance. Mettler balance or equivalent.

8.3.7 All required syringes, gases, and other pertinent supplies. To operate the GC/MS system.

8.3.8 Pipettes, micropipettes, syringes, burets, etc. Used to make calibration and spiking solutions, dilute samples if necessary, etc., including syringes for accurately measuring volumes such as 25 µL and 100 µL.

9. Equipment and Materials

9.1 Materials for Sample Collection (see Figure 3)

9.1.1 Quartz fiber filter. 102 millimeter binderless quartz microfiber filter, Whatman Inc., 6 Just Road, Fairfield, NJ 07004, Filter Type QMA-4.

9.1.2 Polyurethane foam (PUF) plugs (see Figure 5a). 3-inch thick sheet stock polyurethane type (density .022 g/cm^3). The PUF should be of the polyether type used for furniture upholstery, pillows, and mattresses. The PUF cylinders (plugs) should be slightly larger in diameter than the internal diameter of the cartridge. Sources of equipment are Tisch Environmental, Village of Cleves, OH; University Research Glassware, 116 S. Merritt Mill Road, Chapel Hill, NC; Thermo Environmental Instruments, Inc., 8 West Forge Parkway, Franklin, MA; Supelco, Supelco Park, Bellefonte, PA; and SKC Inc., 334 Valley View Road, Eighty Four, PA.

9.1.3 XAD-2® resin (optional). Supelco, Supelco Park, Bellefonte, PA.

9.1.4 Teflon® end caps (see Figure 5a). For sample cartridge; sources of equipment are Tisch Environmental, Village of Cleves, OH; and University Research Glassware, 116 S. Merritt Mill Road, Chapel Hill, NC.

9.1.5 Sample cartridge aluminum shipping containers (see Figure 5b). For sample cartridge shipping; sources of equipment are Tisch Environmental, Village of Cleves, OH; and University Research Glassware, 116 S. Merritt Mill Road, Chapel Hill, NC.

9.1.6 Glass sample cartridge (see Figure 5a). For sample collection; sources of equipment are Tisch Environmental, Village of Cleves, OH; Thermo Environmental Instruments, Inc., 8 West Forge Parkway, Franklin, MA; and University Research Glassware, 116 S. Merritt Mill Road, Chapel Hill, NC.

9.1.7 Aluminum foil. Best source.

9.1.8 Hexane, reagent grade. Best source.

9.2 Sample Clean-up and Concentration

9.2.1 Methylene chloride (extraction solvent for XAD-2®; optional). Chromatographic grade, glass-distilled, best source.

9.2.2 Sodium sulfate-anhydrous (ACS). Granular (purified by washing with methylene chloride followed by heating at 400°C for 4 hours in a shallow tray).

9.2.3 Boiling chips. Solvent extracted or heated in a muffle furnace at 450°C for 2 hours, approximately 10/40 mesh (silicon carbide or equivalent).

9.2.4 Nitrogen. High purity grade, best source.

9.2.5 Hexane. Chromatographic grade, glass-distilled, best source (extraction solvent for PUF).

9.2.6 Glass wool. Silanized, extracted with methylene chloride and hexane, and dried.

9.2.7 Diethyl ether. High purity, glass distilled (extraction solvent for PUF).

9.2.8 Pentane. High purity, glass distilled.

9.2.9 Silica gel. High purity, type 60, 70-230 mesh.

9.3 GC/MS Sample Analysis

9.3.1 Gas cylinder of helium. Ultra high purity, best source.

9.3.2 Chromatographic-grade stainless steel tubing and stainless steel fitting. For interconnections, Alltech Applied Science, 2051 Waukegan Road, Deerfield, IL 60015, 312-948-8600, or equivalent.

[Note: All such materials in contact with the sample, analyte, or support gases prior to analysis should be stainless steel or other inert metal. Do not use plastic or Teflon® tubing or fittings.]

9.3.3 Native and isotopically labeled PAH isomers for calibration and spiking standards. Cambridge Isotopes, 20 Commerce Way, Woburn, MA 01801 (617-547-1818). Suggested isotopically labeled PAH isomers are: D_{10}-fluoranthene, D_{12}-benzo(a)pyrene, D_{10}-fluorene, D_{10}-pyrene, D_{12}-perylene, D_{10}-acenaphthene, D_{12}-chrysene, D_8-naphthalene and D_{10}-phenanthrene.

9.3.4 Decafluorotriphenylphosphine (DFTPP). Used for tuning GC/MS, best source.

9.3.5 Native stock pure standard PAH analytes. For developing calibration curve for GC/MS analysis, best source.

10. Preparation of PUF Sampling Cartridge

[Note: This method was developed using the PS-1 sample cartridge provider by General Metal Works, Village of Cleves, OH as a guideline. EPA has experience in use of this equipment during various field monitoring program over the last several years. Other manufacturers' equipment should work as well; however, modifications to these procedures may be necessary if another commercially available sampler is selected.]

10.1 Summary of Method

10.1.1 This part of the procedure discusses pertinent information regarding the preparation and cleaning of the filter, sorbent, and filter/sorbent cartridge assembly. The separate batches of filters and sorbents are extracted with the appropriate solvent.

10.1.2 At least one PUF cartridge assembly and one filter from each batch, or 10 percent of the batch, whichever is greater, should be tested and certified before the batch is considered for field use.

10.1.3 Prior to sampling, the cartridges are spiked with field surrogate compounds.

10.2 Preparation of Sampling Cartridge

10.2.1 Bake the Whatman QMA-4 quartz filters at 400°C for 5 hours before use.

10.2.2 Set aside the filters in a clean container for shipment to the field or prior to combining with the PUF glass cartridge assembly for certification prior to field deployment.

10.2.3 The PUF plugs are 6.0-cm diameter cylindrical plugs cut from 3-inch sheet stock and should fit, with slight compression, in the glass cartridge, supported by the wire screen (see Figure 5a). During cutting, rotate the die at high speed (e.g., in a drill press) and continuously lubricate with deionized or distilled water. Pre-cleaned PUF plugs can be obtained from commercial sources (see Section 9.1.2).

10.2.4 For initial cleanup, place the PUF plugs in a Soxhlet apparatus and extract with acetone for 16 hours at approximately 4 cycles per hour. When cartridges are reused, use diethyl ether/hexane (5 to 10 percent volume/volume [v/v]) as the cleanup solvent.

[Note: A modified PUF cleanup procedure can be used to remove unknown interference components of the PUF blank. This method consists of rinsing 50 times with toluene, acetone, and diethyl ether/hexane (5 to 10 percent v/v), followed by Soxhlet extraction. The extracted PUF is placed in a vacuum oven connected to a water aspirator and dried at room temperature for approximately 2 to 4 hours (until no solvent odor is detected). The extract from the Soxhlet extraction procedure from each batch may be analyzed to determine initial cleanliness prior to certification.]

10.2.5 If using XAD-2® in the cartridge, initial cleanup of the resin is performed by placing approximately 50-60 grams in a Soxhlet apparatus and extracting with methylene chloride for 16 hours at approximately 4 cycles per hour. At the end of the initial Soxhlet extraction, the spent methylene chloride is discarded and replaced with a fresh reagent. The XAD-2® resin is once again extracted for 16 hours at approximately 4 cycles per hour. The XAD-2® resin is removed from the Soxhlet apparatus, placed in a vacuum oven connected to an ultra-pure nitrogen gas stream, and dried at room temperature for approximately 2-4 hours (until no solvent odor is detected).

10.2.6 Fit a nickel or stainless steel screen (mesh size 200/200) to the bottom of a hexane-rinsed glass sampling cartridge to retain the PUF or XAD-2® sorbents, as illustrated in Figure 5a. If using XAD-2® alone, then place a small diameter (~1/4") PUF plug on top of the nickel or stainless steel screen to retain the XAD-2® in the glass cartridge. Place the Soxhlet-extracted, vacuum-dried PUF (2.5-cm thick by 6.5-cm diameter) on top of the screen in the glass sampling cartridge using polyester gloves. Place ~200 g of the clean XAD-2® inside the glass sampling cartridge on top of the small diameter PUF plug.

10.2.7 Wrap the sampling cartridge with hexane-rinsed aluminum foil, cap with the Teflon® end caps (optional), place in a cleaned labeled aluminum shipping container, and seal with Teflon® tape. Analyze at least 1 cartridge from each batch of cartridges prepared using the procedure described in Section 10.3, before the batch is considered acceptable for field use.

The acceptance level of the cartridge is for each target PAH analyte to be less than or equal to the detection limit requirements to meet the project data quality objectives. It is generally not possible to eliminate the presence of naphthalene, but the amount detected on the cleaned PUF cartridge should be less than five times the concentration of the lowest calibration standard (~500 ng). This amount is insignificant compared to the amount collected from a typical air sample.

In general, the following guidelines are provided in determining whether a cartridge is clean for field use:

- Naphthalene <500 ng/cartridge
- Other PAHs <200 ng total/cartridge

10.3 Procedure for Certification of PUF Cartridge Assembly

[Note: The following procedure outlines the certification of a filter and PUF cartridge assembly. If using XAD-2® as the sorbent, the procedure remains the same, except the solvent is methylene chloride rather than 10 percent diethyl ether/hexane.]

10.3.1 Extract one filter and PUF sorbent cartridge by Soxhlet extraction and concentrate using a K-D evaporator for each lot of filters and cartridges sent to the field.

10.3.2 Assemble the Soxhlet apparatus. Charge the Soxhlet apparatus (see Figure 4a) with 700 mL of the extraction solvent (10 percent v/v diethyl ether/hexane) and reflux for 2 hours. Let the apparatus cool, disassemble it, and discard the used extraction solvent. Transfer the filter and PUF glass cartridge to the Soxhlet apparatus (the use of an extraction thimble is optional).

[Note: The filter and sorbent assembly are tested together in order to reach detection limits, to minimize cost and to prevent misinterpretation of the data. Separate analyses of the filter and PUF would not yield useful information about the physical state of most of the PAHs at the time of sampling due to evaporative losses from the filter during sampling.]

10.3.3 Add between 300 and 350 mL of diethyl ether/hexane (10 percent v/v) to the Soxhlet apparatus. Reflux the sample for 18 hours at a rate of at least 3 cycles per hour. Allow to cool, then disassemble the apparatus.

10.3.4 Assemble a K-D concentrator (see Figure 4b) by attaching a 10-mL concentrator tube to a 500-mL evaporative flask.

10.3.5 Transfer the extract by pouring it through a drying column containing about 10 cm of anhydrous granular sodium sulfate (see Figure 4c) and collect the extract in the K-D concentrator. Rinse the Erlenmeyer flask and column with 20 to 30 mL of 10 percent diethyl ether/hexane to complete the quantitative transfer.

10.3.6 Add one or two clean boiling chips and attach a 3-ball Snyder column to the evaporative flask. Pre-wet the Snyder column by adding about 1 mL of the extraction solvent to the top of the column. Place the K-D apparatus on a hot water bath (~50°C) so that the concentrator tube is partially immersed in the hot water, and the entire lower rounded surface of the flask is bathed with hot vapor. Adjust the vertical position of the apparatus and the water temperature as required to complete the concentration in 1 hour. At the proper rate of distillation, the balls of the column will actively chatter, but the chambers will not flood with condensed solvent. When the apparent volume of liquid reaches approximately 5 mL, remove the K-D apparatus from the water bath and allow it to drain and cool for at least 5 minutes. Remove the Snyder column and rinse the flask and its lower joint into the concentrator tube with 5 mL of cyclohexane. A 1-mL syringe is recommended for this operation.

10.3.7 Concentrate the extract to 5 mL and analyze using GC/MS.

10.3.8 The acceptance level of the cartridge is for each target PAH analyte to be less than or equal to the detection limit requirements to meet the project data qulity objectives. It is generally not possible to eliminate the presence of naphthalene, but the amount detected on the cleaned PUF cartridge should be less than five times the concentration of the lowest calibration standard (~500 ng). This amount is insignificant compared to the amount collected from a typical air sample.

In general, the following guidelines are provided in determining whether a cartridge is clean for field use:

- Naphthalene <500 ng/cartridge
- Other PAHs <200 ng total/cartridge

Cartridges are considered clean for up to 30 days from date of certification when sealed in their containers.

10.4 Deployment of Cartridges for Field Sampling

10.4.1 Immediately prior to field deployment, add surrogate compounds (i.e., chemically inert compounds not expected to occur in an environmental sample) to the center of the PUF cartridge, using a microsyringe. Spike 20 μL of a 50 μg/mL solution of the surrogates onto the center bed of the PUF trap to yield a final concentration of 1 μg. The surrogate compounds must be added to each cartridge assembly. The following field surrogate compounds should be added to each PUF cartridge prior to field deployment to monitor matrix effects, breakthrough, etc.

Field Surrogate Compound	Total Spiked Amount (µg)
D_{10}-Fluoranthene	1
D_{12}-Benzo(a)pyrene	1

Fill out a "chain-of-custody" indicating cartridge number, surrogate concentration, date of cartridge certification, etc. The chain-of-custody must accompany the cartridge to the field and return to the laboratory.

10.4.2 Use the recoveries of the surrogate compounds to monitor for unusual matrix effects and gross sample processing errors. Evaluate surrogate recovery for acceptance by determining whether the measured concentration falls within the acceptance limits of 60-120 percent.

10.4.3 Cartridges are placed in their shipping containers and shipped to the field. Blank cartridges do not need to be chilled when shipping to the field until after exposure to ambient air.

11. Assembly, Calibration, and Collection Using Sampling System

[Note: This method was developed using the PS-1 semi-volatile sampler provided by General Metal Works, Village of Cleves, OH as a guideline. EPA has experience in the use of this equipment during various field monitoring programs over the last several years. Other manufacturers' equipment should work as well; however, modifications to these procedures may be necessary if another commercially available sampler is selected.]

11.1 Sampling Apparatus

The entire sampling system is diagrammed in Figure 2. This apparatus was developed to operate at a rate of 4 to 10 scfm (0.114 to 0.285 std m^3/min) and is used by EPA for high-volume sampling of ambient air. The method write-up presents the use of this device.

The sampling module (see Figure 3) consists of a filter and a glass sampling cartridge containing the PUF utilized to concentrate PAHs from the air. A field portable unit has been developed by EPA (see Figure 6).

11.2 Calibration of Sampling System

Each sampler should be calibrated (1) when new, (2) after major repairs or maintenance, (3) whenever any audit point deviates from the calibration curve by more than 7 percent, (4) before/after each sampling event, and (5) when a different sample collection medium, other than that which the sampler was originally calibrated to, will be used for sampling.

11.2.1 Calibration of Orifice Transfer Standard. Calibrate the modified high volume air sampler in the field using a calibrated orifice flow rate transfer standard. Certify the orifice transfer standard in the laboratory against a positive displacement rootsmeter (see Figure 7). Once certified, the recertification is performed rather infrequently if the orifice is protected from damage. Recertify the orifice transfer standard performed once per year utilizing a set of five multi-hole resistance plates.

[Note: The set of five multihole resistance plates is used to change the flow through the orifice so that several points can be obtained for the orifice calibration curve. The following procedure outlines the steps to calibrate the orifice transfer standard in the laboratory.]

11.2.1.1 Record the room temperature (T_1 in °C) and barometric pressure (P_b in mm Hg) on the Orifice Calibration Data Sheet (see Figure 8). Calculate the room temperature in K (absolute temperature) and record on Orifice Calibration Data Sheet.

$$T_1 \text{ in K} = 273° + T_1 \text{ in °C}$$

11.2.1.2 Set up laboratory orifice calibration equipment as illustrated in Figure 7. Check the oil level of the rootsmeter prior to starting. There are three oil level indicators, one at the clear plastic end, and two sight glasses, one at each end of the measuring chamber.

11.2.1.3 Check for leaks by clamping both manometer lines, blocking the orifice with cellophane tape, turning on the high-volume motor, and noting any change in the rootsmeter's reading. If the rootsmeter's reading changes, there is a leak in the system. Eliminate the leak before proceeding. If the rootsmeter's reading remains constant, turn off the hi-vol motor, remove the cellophane tape, and unclamp both manometer lines.

11.2.1.4 Install the 5-hole resistance plate between the orifice and the filter adapter.

11.2.1.5 Turn manometer tubing connectors one turn counter-clockwise. Make sure all connectors are open.

11.2.1.6 Adjust both manometer midpoints by sliding their movable scales until the zero point corresponds with the meniscus. Gently shake or tap to remove any air bubbles and/or liquid remaining on tubing connectors. (If additional liquid is required for the water manometer, remove tubing connector and add clean water.)

11.2.1.7 Turn on the high-volume motor and let it run for 5 minutes to set the motor brushes. Turn the motor off. Ensure manometers are set to zero. Turn the high-volume motor on.

11.2.1.8 Record the time in minutes required to pass a known volume of air (approximately 5.6 to 8.4 m^3 of air for each resistance plate) through the rootsmeter by using the rootsmeter's digital volume dial and a stopwatch.

11.2.1.9 Record both manometer readings [orifice water manometer (ΔH) and rootsmeter mercury manometer (ΔP)] on Orifice Calibration Data Sheet (see Figure 8).

[Note: ΔH is the sum of the difference from zero (0) of the two column heights.]

11.2.1.10 Turn off the high-volume motor.

11.2.1.11 Replace the 5-hole resistance plate with the 7-hole resistance plate.

11.2.1.12 Repeat Sections 11.2.1.3 through 11.2.1.11.

11.2.1.13 Repeat for each resistance plate. Note results on Orifice Calibration Data Sheet (see Figure 8). Only a minute is needed for warm-up of the motor. Be sure to tighten the orifice enough to eliminate any leaks. Also check the gaskets for cracks.

[Note: The placement of the orifice prior to the rootsmeter causes the pressure at the inlet of the rootsmeter to be reduced below atmospheric conditions, thus causing the measured volume to be incorrect. The volume measured by the rootsmeter must be corrected.]

11.2.1.14 Correct the measured volumes on the Orifice Calibration Data Sheet:

$$V_{std} = V_m \left(\frac{P_a - \Delta P}{P_{std}}\right)\left(\frac{T_{std}}{T_a}\right)$$

where:

V_{std} = standard volume, std m^3

V_m = actual volume measured by the rootsmeter, m^3

P_a = barometric pressure during calibration, mm Hg

ΔP = differential pressure at inlet to volume meter, mm Hg

P_{std} = 760 mm Hg

T_{std} = 298 K

T_a = ambient temperature during calibration, K.

11.2.1.15 Record standard volume on Orifice Calibration Data Sheet.

11.2.1.16 The standard flow rate as measured by the rootsmeter can now be calculated using the following formula:

$$Q_{std} = \frac{V_{std}}{\theta}$$

where:

Q_{std} = standard volumetric flow rate, std m^3/min

θ = elapsed time, min

11.2.1.17 Record the standard flow rates to the nearest 0.01 std m^3/min.

11.2.1.18 Calculate and record $\sqrt{\triangle H\ (P_1/P_{std})(298/T_1)}$ value for each standard flow rate.

11.2.1.19 Plot each $\sqrt{\triangle H\ (P_1/P_{std})(298/T_1)}$ value (y-axis) versus its associated standard flow rate (x-axis) on arithmetic graph paper and draw a line of best fit between the individual plotted points.

[Note: This graph will be used in the field to determine standard flow rate.]

11.2.2 Calibration of the High-Volume Sampling System Utilizing Calibrated Orifice Transfer Standard

For this calibration procedure, the following conditions are assumed in the field:

- The sampler is equipped with an valve to control sample flow rate.
- The sample flow rate is determined by measuring the orifice pressure differential using a Magnehelic gauge.
- The sampler is designed to operate at a standardized volumetric flow rate of 8 ft^3/min (0.225 m^3/min), with an acceptable flow rate range within 10 percent of this value.
- The transfer standard for the flow rate calibration is an orifice device. The flow rate through the orifice is determined by the pressure drop caused by the orifice and is measured using a "U" tube water manometer or equivalent.
- The sampler and the orifice transfer standard are calibrated to standard volumetric flow rate units (scfm or scmm).
- An orifice transfer standard with calibration traceable to NIST is used.
- A "U" tube water manometer or equivalent, with a 0- to 16-inch range and a maximum scale division of 0.1 inch, will be used to measure the pressure in the orifice transfer standard.
- A Magnehelic gauge or equivalent with a 9- to 100-inch range and a minimum scale division of 2 inches for measurements of the differential pressure across the sampler's orifice is used.
- A thermometer capable of measuring temperature over the range of 32° to 122°F (0° to 50°C) to ±2°F (±1°C) and referenced annually to a calibrated mercury thermometer is used.
- A portable aneroid barometer (or equivalent) capable of measuring ambient barometric pressure between 500 and 800 mm Hg (19.5 and 31.5 in. Hg) to the nearest mm Hg and referenced annually to a barometer of known accuracy is used.
- Miscellaneous handtools, calibration data sheets or station log book, and wide duct tape are available.

11.2.2.1 Set up the calibration system as illustrated in Figure 9. Monitor the airflow through the sampling system with a venturi/Magnehelic assembly, as illustrated in Figure 9. Audit the field sampling system once per quarter using a flow rate transfer standard, as described in the EPA *High-Volume Sampling Method, 40 CVR 50, Appendix B*. Perform a single-point calibration before and after each sample collection, using the procedures described in Section 11.2.3.

11.2.2.2 Prior to initial multi-point calibration, place an empty glass cartridge in the sampling head and activate the sampling motor. Fully open the flow control valve and adjust the voltage variator so that a sample flow rate corresponding to 110 percent of the desired flow rate (typically 0.20 to 0.28 m^3/min) is indicated on the Magnehelic gauge (based on the previously obtained multipoint calibration curve). Allow the motor to warm up for 10 min and then adjust the flow control valve to achieve the desire flow rate. Turn off the sampler. Record the ambient temperature and barometric pressure on the Field Calibration Data Sheet (see Figure 10).

11.2.2.3 Place the orifice transfer standard on the sampling head and attach a manometer to the tap on the transfer standard, as illustrated in Figure 9. Properly align the retaining rings with the filter holder and secure by tightening the three screw clamps. Connect the orifice transfer standard by way of the pressure tap to a

manometer using a length of tubing. Set the zero level of the manometer or Magnehelic. Attach the Magnehelic gauge to the sampler venturi quick release connections. Adjust the zero (if needed) using the zero adjust screw on face of the gauge.

11.2.2.4 To leak test, block the orifice with a rubber stopper, wide duct tape, or other suitable means. Seal the pressure port with a rubber cap or similar device. Turn on the sampler.

Caution: *Avoid running the sampler for too long a time with the orifice blocked. This precaution will reduce the chance that the motor will be overheated due to the lack of cooling air. Such overheating can shorten the life of the motor.*

11.2.2.5 Gently rock the orifice transfer standard and listen for a whistling sound that would indicate a leak in the system. A leak-free system will not produce an upscale response on the sampler's magnehelic. Leaks are usually caused either by damaged or missing gaskets, by cross-threading, and/or not screwing sample cartridge together tightly. All leaks must be eliminated before proceeding with the calibration. When the sample is determined to be leak-free, turn off the sampler and unblock the orifice. Now remove the rubber stopper or plug from the calibrator orifice.

11.2.2.6 Turn the flow control valve to the fully open position and turn the sampler on. Adjust the flow control valve until a Magnehelic reading of approximately 70 in. is obtained. Allow the Magnehelic and manometer readings to stabilize and record these values on the orifice transfer Field Calibration Data Sheet (see Figure 10).

11.2.2.7 Record the manometer reading under Y1 and the Magnehelic reading under Y2 on the Field Calibration Data Sheet. For the first reading, the Magnehelic should still be at 70 inches as set above.

11.2.2.8 Set the Magnehelic to 60 inches by using the sampler's flow control valve. Record the manometer (Y1) and Magnehelic (Y2) readings on the Field Calibration Data Sheet (see Figure 10).

11.2.2.9 Repeat the above steps using Magnehelic settings of 50, 40, 30, 20, and 10 inches.

11.2.2.10 Turn the voltage variator to maximum power, open the flow control valve, and confirm that the Magnehelic reads at least 100 inches. Turn off the sampler and confirm that the Magnehelic reads zero.

11.2.2.11 Read and record the following parameters on the Field Calibration Data Sheet. Record the following on the calibration data sheet:

- Data, job number, and operator's signature.
- Sampler serial number.
- Ambient barometric pressure.
- Ambient temperature.

11.2.2.12 Remove the "dummy" cartridge and replace with a sample cartridge.

11.2.2.13 Obtain the manufacturer high volume orifice calibration certificate.

11.2.2.14 If not performed by the manufacturer, calculate values for each calibrator orifice static pressure (Column 6, inches of water) on the manufacturer's calibration certificate using the following equation:

$$\sqrt{\triangle H(P_a/760)[298/(T_a + 273)]}$$

where:

P_a = the barometric pressure (mm Hg) at time of manufacturer calibration, mm Hg
T_a = temperature at time of calibration, °C

11.2.2.15 Perform a linear regression analysis using the values in Column 7 of the manufacturer's High Volume Orifice Calibration Certificate for flow rate (Q_{std}) as the "X" values and the calculated values as the Y

values. From this relationship, determine the correlation (CC1), intercept (B1), and slope (M1) for the Orifice Transfer Standard.

11.2.2.16 Record these values on the Field Calibration Data Sheet (see Figure 10).

11.2.2.17 Using the Field Calibration Data Sheet values (see Figure 10), calculate the Orifice Manometer Calculated Values (Y3) for each orifice manometer reading using the following equation:

Y3 Calculation

$$Y3 = \{Y1(P_a/760)[298/(T_a + 273)]\}^{½}$$

11.2.2.18 Record the values obtained in Column Y3 on the Field Calibration Data Sheet (see Figure 10).

11.2.2.19 Calculate the Sampler Magnehelic Calculated Value (Y4) using the following equation:

Y4 Calculation

$$Y4 = \{Y2(P_a/760)[298/(T_a + 273)]\}^{½}$$

11.2.2.20 Record the value obtained in Column Y4 on the Field Calibration Data Sheet (see Figure 10).

11.2.2.21 Calculate the Orifice Flow Rate (X1) in scm using the following equation:

X1 Calculation

$$X1 = \frac{Y3 - B1}{M1}$$

11.2.2.22 Record the values obtained in Column X1 on the Field Calibration Data Sheet (see Figure 10).

11.2.2.23 Perform a linear regression of the values in Column X1 (as X) and the values in Column Y4 (as Y). Record the relationship for correlation (CC2), intercept (B2), and slope (M2) on the Field Calibration Data Sheet. The correlation coefficient must be 0.990 or greater.

11.2.2.24 Using the following equation, calculate a set point (SP) for the manometer to represent a desired flow rate:

Set Point

$$\text{Set point (SP)} = [(\text{Expected } P_a)/(\text{Expected } T_a)(T_{std}/P_{std})][M2\ (\text{Desired flow rate}) + B2]^2$$

where:

P_a = Expected atmospheric pressure (P_a), mm Hg
T_a = Expected atmospheric temperature (T_a), 273 + °C
M2 = Slope of developed relationship
B2 = Intercept of developed relationship
T_{std} = Temperature standard, 273 + 25°C
P_{std} = Pressure standard, 760 mm Hg

11.2.2.25 During monitoring, calculate a flow rate from the observed Magnehelic reading using the following equations:

Flow Rate

$$Y5 = [\text{Average Magnehelic Reading } (\Delta H)\ (P_a/T_a)(T_{std}/P_{std})]^{1/2}$$

$$X2 = \frac{Y5 - B2}{M2}$$

where:

Y5 = Corrected average magnehelic reading
X2 = Instant calculated flow rate, scm

11.2.2.26 The relationship in calibration of a sampling system between Orifice Transfer Standard and flow rate through the sampler is illustrated in Figure 11.

11.2.3 Single-Point Audit of the High Volume Sampling System Utilizing Calibrated Orifice Transfer Standard

Single point calibration checks are required as follows:

- Prior to the start of each 24-hour test period.
- After each 24-hour test period. The post-test calibration check may serve as the pre-test calibration check for the next sampling period if the sampler is not moved.
- Prior to sampling after a sample is moved.

For samplers, perform a calibration check for the operational flow rate before each 24-hour sampling event and when required as outlined in the user quality assurance program. The purpose of this check is to track the sampler's calibration stability. Maintain a control chart presenting the percentage difference between a sampler's indicated and measured flow rates. This chart provides a quick reference of sampler flow-rate drift problems and is useful for tracking the performance of the sampler. Either the sampler log book or a data sheet will be used to document flow-check information. This information includes, but is not limited to, sampler and orifice transfer standard serial number, ambient temperature, pressure conditions, and collected flow-check data.

In this subsection, the following is assumed:

- The flow rate through a sampler is indicated by the orifice differential pressure;
- Samplers are designed to operate at an actual flow rate of 8 scfm, with a maximum acceptable flow-rate fluctuation range of ±10 percent of this value;
- The transfer standard will be an orifice device equipped with a pressure tap. The pressure is measured using a manometer; and
- The orifice transfer standard's calibration relationship is in terms of standard volumetric flow rate (Q_{std}).

11.2.3.1 Perform a single point flow audit check before and after each sampling period utilizing the Calibrated Orifice Transfer Standard (see Section 11.2.1).

11.2.3.2 Prior to single point audit, place a "dummy" glass cartridge in the sampling head and activate the sampling motor. Fully open the flow control valve and adjust the voltage variator so that a sample flow rate corresponding to 110 percent of the desired flow rate (typically 0.19 to 0.28 m^3/min) is indicated on the Magnehelic gauge (based on the previously obtained multipoint calibration curve). Allow the motor to warm up for 10 minutes and then adjust the flow control valve to achieve the desired flow rate. Turn off the sampler. Record the ambient temperature and barometric pressure on the Field Test Data Sheet (see Figure 12).

11.2.3.3 Place the flow rate transfer standard on the sampling head.

11.2.3.4 Properly align the retaining rings with the filter holder and secure by tightening the three screw clamps. Connect the flow rate transfer standard to the manometer using a length of tubing.

11.2.3.5 Using tubing, attach one manometer connector to the pressure tap of the transfer standard. Leave the other connector open to the atmosphere.

11.2.3.6 Adjust the manometer midpoint by sliding the movable scale until the zero point corresponds with the water meniscus. Gently shake or tap to remove any air bubbles and/or liquid remaining on tubing connectors. (If additional liquid is required, remove tubing connector and add clean water.)

11.2.3.7 Turn on the high-volume motor and let run for 5 minutes.

11.2.3.8 Record the pressure differential indicated, ΔH, in inches of water, on the Field Test Data Sheet. Be sure a stable ΔH has been established.

11.2.3.9 Record the observed Magnehelic gauge reading in inches of water on the Field Test Data Sheet. Be sure stable ΔM has been established.

11.2.3.10 Using previous established Orifice Transfer Standard curve, calculate Q_{xs} (see Section 11.2.2.23).

11.2.3.11 This flow should be within ±10 percent of the sampler set point, normally, 0.224 m^3. If not, perform a new multipoint calibration of the sampler.

11.2.3.12 Remove flow rate transfer standard and dummy sorbent cartridge.

11.3 Sample Collection

11.3.1 General Requirements

11.3.1.1 The sampler should be located in an unobstructed area, at least 2 meters from any obstacle to air flow. The exhaust hose should be stretched out in the downwind direction to prevent recycling of air into the sample head.

11.3.1.2 All cleaning and sample module loading and unloading should be conducted in a controlled environment, to minimize any chance of potential contamination.

11.3.1.3 When new or when using the sampler at a different location, all sample contact areas need to be cleaned. Use triple rinses of reagent grade hexane or methylene chloride contained in Teflon® rinse bottles. Allow the solvents to evaporate before loading the PUF modules.

11.3.2 Preparing Cartridge for Sampling

11.3.2.1 Detach the lower chamber of the cleaned sample head. While wearing disposable, clean, lint-free nylon, or cotton gloves, remove a clean glass sorbent module from its shipping container. Remove the Teflon® end caps (if applicable). Replace the end caps in the sample container to be reused after the sample has been collected.

11.3.2.2 Insert the glass module into the lower chamber and tightly reattach the lower chambers to the module.

11.3.2.3 Using clean rinsed (with hexane) Teflon®-tipped forceps, carefully place a clean conditioned fiber filter atop the filter holder and secure in place by clamping the filter holder ring over the filter. Place the

aluminum protective cover on top of the cartridge head. Tighten the 3 screw clamps. Ensure that all module connections are tightly assembled. Place a small piece of aluminum foil on the ball-joint of the sample cartridge to protect from back-diffusion of semi-volatiles into the cartridge during transporting to the site.

[Note: Failure to do so could expose the cartridge to contamination during transport.]

11.3.2.4 Place the cartridge in a carrying bag to take to the sampler.

11.3.3 Collection

11.3.3.1 After the sampling system has been assembled, perform a single point flow check as described in Sections 11.2.3.

11.3.3.2 With the empty sample module removed from the sampler, rinse all sample contact areas using reagent grade hexane in a Teflon® squeeze bottle. Allow the hexane to evaporate from the module before loading the samples.

11.3.3.3 With the sample cartridge removed from the sampler and the flow control valve fully open, turn the pump on and allow it to warm-up for approximately 5 minutes.

11.3.3.4 Attach a "dummy" sampling cartridge loaded with the exact same type of filter and PUF media to be used for sample collection.

11.3.3.5 Turn the sampler on and adjust the flow control valve to the desired flow as indicated by the Magnehelic gauge reading determined in Section 11.2.2.24. Once the flow is properly adjusted, take extreme care not to inadvertently alter its setting.

11.3.3.6 Turn the sampler off and remove the "dummy" module. The sampler is now ready for field use.

11.3.3.7 Check the zero reading of the sampler Magnehelic. Record the ambient temperature, barometric pressure, elapsed time meter setting, sampler serial number, filter number, and PUF cartridge number on the Field Test Data Sheet (see Figure 12). Attach the loaded sampler cartridge assembly to the sampler.

11.3.3.8 Place the voltage variator and flow control valve at the settings used in Section 11.3.2, and the power switch. Activate the elapsed time meter and record the start time. Adjust the flow (Magnehelic setting), if necessary, using the flow control valve.

11.3.3.9 Record the Magnehelic reading every 6 hours during the sampling period. Use the calibration factors (see Section 11.2.2.24) to calculate the desired flow rate. Record the ambient temperature, barometric pressure, and Magnehelic reading at the beginning and during sampling period.

11.3.4 Sample Recovery

11.3.4.1 At the end of the desired sampling period, turn the power off. Carefully remove the sampling head containing the filter and sorbent cartridge. Place the protective "plate" over the filter to protect the cartridge during transport to a clean recovery area. Also, place a piece of aluminum foil around the bottom of the sampler cartridge assembly.

11.3.4.2 Perform a final calculated sampler flow check using the calibration orifice, assembly, as described in Section 11.3.2. If calibration deviates by more than 10 percent from initial reading, mark the flow data for that sample as suspect and inspect and/or remove from service, record results on Field Test Data Sheet, Figure 12.

11.3.4.3 Transport the sampler cartridge assembly to a clean recovery area.

11.3.4.4 While wearing white cotton gloves, remove the PUF glass cartridge from the lower module chamber and lay it on the retained aluminum foil in which the sample was originally wrapped.

11.3.4.5 Carefully remove the quartz fiber filter from the upper chamber using clean Teflon®-tipped forceps.

11.3.4.6 Fold the filter in half twice (sample side inward) and place it in the glass cartridge atop the PUF.

11.3.4.7 Wrap the combined samples in the original hexane-rinsed aluminum foil, attach Teflon® end caps (if applicable) and place them in their *original* aluminum shipping container. Complete a sample label and affix it to the aluminum shipping container.

11.3.4.8 Chain-of-custody should be maintained for all samples. Store the containers under blue ice or dry ice and protect from UV light to prevent possibly photo-decomposition of collected analytes. If the time span between sample collection and laboratory analysis is to exceed 24 hours, refrigerate sample at 4°C.

11.3.4.9 Return at least one field blank filter/PUF cartridge to the laboratory with each group of samples. Treat a field blank exactly as the sample except that air is not drawn through the filter/sorbent cartridge assembly.

11.3.4.10 Ship and store field samples chilled (<4°C) using blue ice until receipt at the analytical laboratory, after which samples should be refrigerated at less than or equal to 4°C for up to 7 days prior to extraction; extracts should be analyzed within 40 days of extraction.

12. Sample Extraction, Concentration, and Cleanup

[Note: The following sample extraction, concentration, solvent exchange and analysis procedures are outlined for user convenience in Figure 13.]

12.1 Sample Identification

12.1.1 The chilled (<4°C) samples are returned in the aluminum shipping container (containing the filter and sorbents) to the laboratory for analysis. The "chain-of-custody" should be completed.

12.1.2 The samples are logged in the laboratory logbook according to sample location, filter and sorbent cartridge number identification, and total air volume sampled (uncorrected).

12.1.3 If the time span between sample registration and analysis is greater than 24-hours, then the sample must be kept refrigerated at <4°C. Minimize exposure of samples to fluorescent light. All samples should be extracted within one week (7 days) after sampling.

12.2 Soxhlet Extraction and Concentration

[Note: If PUF is the sorbent, the extraction solvent is 10 percent diethyl ether in hexane. If XAD-2® resin is the sorbent, the extraction solvent is methylene chloride.]

12.2.1 Assemble the Soxhlet apparatus (see Figure 4a). Immediately before use, charge the Soxhlet apparatus with 700 to 750 mL of 10 percent diethyl ether in hexane and reflux for 2 hours. Let the apparatus cool, disassemble it, transfer the diethyl ether in hexane to a clean glass container, and retain it as a blank for later analysis, if required. Place the sorbent and filter together in the Soxhlet apparatus (the use of an extraction thimble is optional).

[Note: The filter and sorbent are analyzed together in order to reach detection limits, avoid questionable interpretation of the data, and minimize cost.]

12.2.1.1 Prior to extraction, add appropriate laboratory surrogate standards to the Soxhlet solvent. A surrogate standard (i.e., a chemically compound not expected to occur in an environmental sample) should be added to each sample, blank, and matrix spike sample just prior to extraction or processing. The recovery of the laboratory surrogate standard is used to monitor for unusual matrix effects, gross sample processing errors, etc. Surrogate recovery is evaluated for acceptance by determining whether the measure concentration falls within the acceptance limits. Spike 20 μL of a 50 μg/mL solution of the surrogates onto the PUF cartridge, prior to Soxhlet extraction, to yield a final concentration of 1 μg. The following laboratory surrogate standards have been

successfully utilized in determining Soxhlet extraction effects, sample process errors, etc., for GC/MS/DS analysis.

Laboratory Surrogate Standard	Total Spiked Amount (µg)
D_{10}-Fluorene	1
D_{10}-Pyrene	1

Section 13.2 outlines preparation of the laboratory surrogates. Add the laboratory surrogate compounds to the PUF cartridge. Add 700 mL of 10 percent diethyl ether in hexane to the apparatus and reflux for 18 hours at a rate of at least 3 cycles per hour. Allow to cool, then disassemble the apparatus.

12.2.1.2 Dry the extract from the Soxhlet extraction by passing it though a drying column containing about 10 grams of anhydrous sodium sulfate. Collect the dried extract in a K-D concentrator assembly. Wash the extractor flask and sodium sulfate column with 100-125 mL of 10 percent diethyl ether/hexane to complete the quantitative transfer.

12.2.2 Assemble a K-D concentrator (see Figure 4b) by attaching a 10 mL concentrator tube to a 500 mL evaporative flask.

[Note: Other concentration devices (vortex evaporator) or techniques may be used in place of the K-D as long as qualitative and quantitative recovery can be demonstrated.]

12.2.2.1 Add two boiling chips, attach a three-ball macro-Snyder column to the K-D flask, and concentrate the extract using a water bath at 60 to 65°C. Place the K-D apparatus in the water bath so that the concentrator tube is about half immersed in the water and the entire rounded surface of the flask is bathed with water vapor. Adjust the vertical position of the apparatus and the water temperature as required to complete the concentration in one hour. At the proper rate of distillation, the balls of the column actively chatter but the chambers do not flood. When the liquid has reached an approximate volume of 5 mL, remove the K-D apparatus from the water bath and allow the solvent to drain for at least 5 minutes while cooling.

12.2.2.2 Remove the Snyder column and rinse the flask and its lower joint into the concentrator tube with 5 mL of cyclohexane. A 5 mL syringe is recommended for this operation. The extract is now ready for further concentration to 1.0 mL by nitrogen blowdown.

12.2.2.3 Place the 1 mL calibrated K-D concentrator tube with an open micro-Snyder attachment in a warm water bath (30 to 3 5°C) and evaporate the solvent volume to just below 1 mL by blowing a gentle stream of clean, dry nitrogen (filtered through a column of activated carbon) above the extract.

12.2.2.4 The internal wall of the concentrator tube must be rinsed down several times with hexane during the operation.

12.2.2.5 During evaporation, the tube solvent level must be kept below the water level of the bath. the extract must never be allowed to become dry.

12.2.2.6 Bring the final volume back to 1.0 mL with hexane. Transfer the extract to a Teflon®-sealed screw-cap amber vial, label the vial, and store at 4°C (±2°C).

[Note: It is not necessary to bring the volume to exactly 1.0 mL if the extract will be cleaned up by solid phase extraction cleanup methods. Final volume is brought to 1.0 mL after cleanup.]

12.3 Sample Cleanup

12.3.1 If the extract is cloudy, impurities may be removed from the extract by solid phase extraction using activated silica gel. Clean-up procedures may not be needed for relatively clean matrix samples.

12.3.2 Approximately 10 grams of silica gel, type 60 (70-230 mesh), are extracted in a Soxhlet extractor with 10 percent diethyl ether for 6 hours (minimum rate, 3 cycles/hr) and then activated by heating in a foil-covered glass container for 16 hours at 150°C.

12.3.3 Using a disposable Pasteur pipette (7.5-mm x 14.6-cm), place a small piece of glass wool in the neck of the pipette. Prepare a slurry of activated silica gel in 10 percent diethyl ether. Place 10 grams of the activated silica gel slurry into the column using additional 10 percent diethyl ether. Finally, 1 gram of anhydrous sodium sulfate is added to the top of the silica gel. Prior to use, the column is rinsed with 10 percent diethyl ether at 1 mL/min for 1 hour to remove any trace of contaminants. It is then pre-eluted with 40 mL of pentane and the eluate discarded.

12.3.4 While the pentane pre-elutant covers the top of the column, 1 mL of the sample extract is transferred to the column, and washed on with 2 mL of *n*-hexane to complete the transfer. Allow to elute through the column. Immediately prior to exposure of the sodium sulfate layer the air, add 25 mL of pentane and continue the elution process. The pentane eluate is discarded.

12.3.5 The column is finally eluted at 2 mL/min with 25 mL of 10 percent diethyl ether in pentane (4:6 v/v) and collected in a 50 mL K-D flask equipped with a 5 mL concentrator tube for concentration to less than 5 mL. The concentrate is further concentrated to 1.0 mL under a gentle stream of nitrogen as previously described.

12.3.6 The extract is now ready for GC/MS analysis. Spike the extract with internal standards (ISs) before analysis. The following internal standards (ISs) have been successfully used in PAH analysis by GC/MS.

Internal Standard (IS)	**Total Spiked Amount (µg)**
D_8-Naphthalene	0.5
D_{10}-Acenaphthene	0.5
D_{10}-Phenanthrene	0.5
D_{12}-Chrysene	0.5
D_{12}-Perylene	0.5

Section 13.2 outlines preparation of the ISs.

13. Gas Chromatography with Mass Spectrometry Detection

13.1 General

13.1.1 The analysis of the extracted sample for benzo[a]pyrene and other PAHs is accomplished by an electron ionization gas chromatograph/mass spectrometer (EI GC/MS) in the mode with a total cycle time (including voltage reset time) of 1 second or less. The GC is equipped with an DB-5 fused silica capillary column (30-m x 0.32-mm I.D.) with the helium carrier gas for analyte separation. The GC column is temperature controlled and interfaced directly to the MS ion source.

13.1.2 The laboratory must document that the EI GC/MS system is properly maintained through periodic calibration checks. The GC/MS system should be operated in accordance with specifications outlined in Table 2.

13.1.3 The GC/MS is tuned using a 50 ng/µL solution of decafluorotriphenylphosphine (DFTPP). The DFTPP permits the user to tune the mass spectrometer on a daily basis. If properly tuned, the DFTPP key ions and ion abundance criteria should be met as outlined in Table 3.

13.1.4 The GC/MS operating conditions are outlined in Table 2. The GC/MS system should be calibrated using the internal standard technique. Figure 14 outlines the following sequence involving the GC/MS calibration.

13.2 Calibration of GC/MS/DS

13.2.1 Standard Preparation

Stock PAH Standards Including Surrogate Compounds

13.2.1.1 Prepare stock standards of B[a]P and other PAHs. The stock standard solution of B[a]P (2.0 µg/µL) and other PAHs can be user prepared from pure standard materials or can be purchased commercially.

13.2.1.2 Place 0.2000 grams of native B[a]P and other PAHs on a tared aluminum weighing disk and weigh on a Mettler balance.

13.2.1.3 Quantitatively transfer the material to a 100 mL volumetric flask. Rinse the weighing disk with several small portions of 10 percent diethyl ether/hexane. Ensure all material has been transferred.

13.2.1.4 Dilute to mark with 10 percent diethyl ether/hexane.

13.2.1.5 The concentration of the stock standard solution of B[a]P or other PAHs in the flask is 2.0 µg/µL.

[Note: Commercially prepared stock PAH standards may be used at any concentration if they are certified by the manufacturer or by an independent source.]

13.2.1.6 Transfer the stock standard solutions into Teflon®-sealed screw-cap bottles. Store at 4°C and protect from light. Stock standard solutions should be checked frequently for signs of degradation or evaporation, especially just prior to preparing calibration standards from them.

13.2.1.7 Stock PAH standard solutions must be replaced after 1 year or sooner if comparison with quality control check samples indicates a problem.

Mix Internal Standard (IS) Solution

13.2.1.8 For PAH analysis, deuterated internal standards are selected that are similar in analytical behavior to the compound of interest. The following internal standards are suggested for PAH analysis:

D_{12}-Perylene
Benzo(e)pyrene
Benzo(a)pyrene
Benzo(k)fluoranthene

D_{10}-Acenaphthene
Acenaphthene (if using XAD-2® as the sorbent)
Acenaphthylene (if using XAD-2® as the sorbent)
Fluorene
Benzo(g,h,i)perylene
Dibenz(a,h)anthracene
Indeno(1,2,3-cd)pyrene
Perylene
Benzo(b)fluoranthene
Coronene

D_{12}-Chrysene
Benz(a)anthracene
Chrysene
Pyrene

D_8-Naphthalene
Naphthalene (if using XAD-2® as the sorbent)

D_{10}-Phenanthrene
Anthracene
Fluoranthene
Phenanthrene

13.2.1.9 Purchase a mix IS solution containing specific IS needed for quantitation at a concentration of 2,000 ng/µL.

Mixed Stock PAH Standard Including Surrogate Compounds

13.2.1.10 Prepare a mixed stock PAH standard by taking 125 µL of the stock PAH standard(s) and diluting to mark with hexane in a 10-mL volumetric flask. The concentration of the mixed stock PAH standard(s) is 25 ng/µL.

Calibration PAH Standards Including Surrogate Compounds

13.2.1.11 Calibration PAH standards can be generated from the stock PAH standard using serial dilution utilizing the following equation:

$$C_1V_1 = C_2V_2$$

where:

C_1 = Concentration of stock PAH standards, ng/µL
V_1 = Volume of stock PAH standard solution taken to make calibration PAH standards, µL
V_2 = Final volume diluted to generate calibration PAH standards, µL
C_2 = Final concentration of calibration PAH standards, ng/µL

13.2.1.12 Using the above equation, prepare a series of calibration PAH standards which include the surrogate compounds (i.e., 2.50 ng/µL, 1.25 ng/µL, 0.50 ng/µL, 0.25 ng/µL, and 0.10 ng/µL) according to the scheme illustrated in Table 4 and described below.

- For CAL 5, transfer 1.00 mL of the mixed PAH stock standard in a 10-mL volumetric flask and dilute to 10.0 mL with hexane. The resulting concentration is 2.5 ng/µL for the PAH analytes.
- To prepare CAL 4, transfer 500 µL of the mixed PAH stock standard solution to a 10-mL volumetric flask and dilute to 10.0 mL with hexane. The resulting concentration is 1.25 ng/µL for PAH analytes.
- To prepare CAL 3, transfer 200 µL of the mixed PAH stock solution to a 10-mL volumetric flask and dilute to 10-mL with hexane. The resulting concentration is 0.50 ng/µL for PAH analytes.
- To prepare CAL 2, transfer 100 µL of the mixed PAH stock solution to a 10-mL volumetric flask and dilute to 10-mL with hexane. The resulting concentration is 0.25 ng/µL for PAH analytes.
- To prepare CAL 1, transfer 40 µL of the mixed PAH stock solution to a 10-mL volumetric flask and dilute to 10-mL with hexane. The resulting concentration is 0.10 ng/µL for PAH analytes.

13.2.2 Internal Standard Spiking

13.2.2.1 Prior to GC/MS analysis, each 1 mL aliquot of the five calibration standards is spiked with internal standard to a final concentration of 0.5 ng/µL. To do this, first prepare a 1:40 dilution of the 2,000 ng/µL mixed internal standard solution by diluting 250 µL to a volume of 10 mL to yield a concentration of 50 ng/µL.

13.2.2.2 Each 1.0-mL portion of calibration standard and sample extract is then spiked with 10 µL of the internal standard solution prior to analysis by GC/MS/DS operated in the SCAN mode.

13.2.3 Storage, Handling, and Retention of Standards

13.2.3.1 Store the stock and mixed standard solutions at 4°C (±2°C) in Teflon®-lined screw-cap amber bottles. Store the working standard solutions at 4°C (±2°C) in Teflon®-lined screw-cap amber bottles.

13.2.3.2 Protect all standards from light. Samples, sample extracts, and standards must be stored separately.

13.2.3.3 Stock standard solutions must be replaced every 12 months, or sooner, if comparison with quality control check samples indicates a problem. Diluted working standards are usable for 6 months. Analysis difficulties, which warrant investigation, may require preparation of new standards. All standards are securely stored at ~4°C (±2°C) but above freezing. The concentration, preparation and expiration date, and solvent are identified on standard vial labels. Each standard is uniquely identified with its laboratory notebook number and a prefix. This procedure helps provide traceability to standard preparation.

13.2.3.4 Take care to maintain the integrity of each standard. The solvent, hexane, is volatile and can easily evaporate. Make sure each vial is sealed after use, and mark the solvent level on the side of the vial. When retrieving a vial for use, if the solvent level does not match the mark, dispose of the standard and obtain a new one.

13.3 GC/MS Instrument Operating Conditions

13.3.1 Gas Chromatograph (GC). The following are the recommended GC analytical conditions, as also outlined in Table 3, to optimize conditions for compound separation and sensitivity.

Carrier Gas:	Helium
Linear Velocity:	28-29 cm^3/sec
Injector Temperature:	250-300°C
Injector:	Grob-type, splitless, 2 µL
Temperature Program:	Initial Temperature: 70°C
Initial Hold Time:	4.0 ± 0.1 min.
Ramp Rate:	10°C/min to 300°C, hold for 10 min
Final Temperature:	300°C
Final Hold Time:	10 min (or until all compounds of interest have eluted).
Analytical Time:	Approximately 50 min.

13.3.2 Mass Spectrometer. Following are the required mass spectrometer conditions for scan data acquisition:

Transfer Line Temperature:	290°C
Source Temperature:	According to manufacturer's specifications
Electron Energy:	70 volts (nominal)
Ionization Mode:	EI
Mass Range:	35 to 500 amu, SCAN data acquisition
Scan Time:	At least 5 scans per peak, not to exceed 1 second per scan

13.3.3 Instrument Performance Check for GC/MS.

13.3.3.1 Summary. It is necessary to establish that the GC/MS meet tuning and standard mass spectral abundance criteria prior to initiating any on-going data collection, as illustrated in Figure 14. This is accomplished through the analysis of decafluorotriphenylphosphine (DFTPP).

13.3.3.2 Frequency. The instrument performance check solution of DFTPP will be analyzed initially and once per 12-hour time period of operation. Also, whenever the laboratory takes corrective action which may change or affect the mass spectral criteria (e.g., ion source cleaning or repair, column replacement, etc.), the instrument performance check must be verified irrespective of the 12-hour laboratory requirement. The 12-hour

time period for GC/MS analysis begins at the injection of the DFTPP, which the laboratory submits as documentation of a compliance tune. The time period ends after 12 hours have elapsed. To meet instrument performance check requirements, samples, blanks, and standards must be injected within 12 hours of the DFTPP injection.

13.3.3.3 Procedure. Inject 50 ng of DFTPP into the GC/MS system. DFTPP may be analyzed separately or as part of the calibration standard.

13.3.3.4 Technical Acceptance Criteria. The following criteria have been established in order to generate accurate data:

- Prior to the analysis of any samples, blanks, or calibration standards, the laboratory must establish that the GC/MS system meets the mass spectral ion abundance criteria for the instrument performance check solution containing DFTPP.
- The GC/MS system must be tuned to meet the manufacturer's specifications, using a suitable calibrant. The mass calibration and resolution of the GC/MS system are verified by the analysis of the instrument performance check solution.
- The abundance criteria listed in Table 3 must be met for a 50 ng injection of DFTPP. The mass spectrum of DFTPP must be acquired by averaging three scans (the peak apex scan and the scans immediately preceding and following the apex). Background subtraction is required, and must be accomplished using a single scan prior to the elution of DFTPP.

[Note: All ion abundance MUST be normalized to m/z 198, the nominal base peak, even though the ion abundances of m/z 442 may be up to 110 percent of m/z 198.]

- The above criteria are based on adherence to the acquisition specifications identified in Table 4 and were developed for the specific target compound list associated with this document. The criteria are based on performance characteristics of instruments currently utilized in routine support of ambient air program activities. These specifications, in conjunction with relative response factor criteria for target analytes, are designed to control and monitor instrument performance associated with the requirements if this document. As they are performance-based criteria for these specific analytical requirements, they may not be optimal for additional target compounds.
- If the mass spectrometer has the ability for autotuning, then the user may utilize this function following manufacturer's specifications. Autotune automatically adjusts ion source parameters within the detector using FC-43 (Heptacos). Mass peaks at m/z 69, 219, and 502 are used for tuning. After the tuning is completed, the FC-43 abundances at m/z 50, 69, 131, 219, 414, 502, and 614 are further adjusted such that their relative intensities match the selected masses of DFTPP.

13.3.3.5 Corrective Action. If the DFTPP acceptance criteria are not met, the MS must be retuned. It may be necessary to clean the ion source, or quadrupoles, or take other actions to achieve the acceptance criteria. DFTPP acceptance criteria MUST be met before any standards, or required blanks, are analyzed. Any standards, field samples, or required blanks analyzed when tuning criteria have not been met will require reanalysis.

13.3.4 Initial Calibration for GC/MS.

13.3.4.1 Summary. Prior to the analysis of samples and required blanks, and after tuning criteria (instrument performance check) have been met, each GC/MS system will be initially calibrated at a minimum of five concentrations to determine instrument sensitivity and the linearity of GC/MS response for the analyte compounds and the surrogates.

13.3.4.2 Frequency. Each GC/MS system must be initially calibrated whenever the laboratory takes corrective action, which may change or affect the initial calibration criteria (e.g., ion source cleaning or repair,

column replacement, etc.), or if the continuing calibration acceptance criteria have not been met. If time still remains in the 12-hour time period after meeting the technical acceptance criteria for the initial calibration, samples may be analyzed. It is not necessary to analyze a continuing calibration standard within the 12-hour time period if the initial calibration standard (CAL 3) is the same concentration as the continuing calibration standard and both meet the continuing calibration technical acceptance criteria. Quantify all sample results using the mean of the relative response factors ($\overline{RRFs}$) from the initial calibration.

13.3.4.3 Procedure. Perform the following activities to generate quantitative data:

- Set up the GC/MS system.
- Warm all standard/spiking solutions, sample extracts, and blanks to ambient temperature (~1 hour) before analysis.
- Tune the GC/MS system to meet the technical acceptance criteria (see Section 13.3.3).
- Prepare five calibration standards containing the target compounds, internal standards, and surrogate compounds at the concentrations outlined in Table 4.
- Calibrate the GC/MS by injecting 2.0 µL of each standard. If a compound saturates when the CAL 5 standard is injected, and the system is calibrated to achieve a detection sensitivity of no less than the MDL for each compound, the laboratory must document it and attach a quantitation report and chromatogram. In this instance, the laboratory must calculate the results based on a four-point initial calibration for the *specific compound* that saturates. Secondary ion quantitation is only allowed when there are sample interferences with the primary quantitation ion. If secondary ion quantitation is used, calculate a relative response factor using the area response from the most intense secondary ion which is free of interferences and document the reasons for the use of the secondary ion.
- Record a mass spectrum of each target compound. Figure 15(a) through 15(q) documents the mass spectrum for each of the 16 target PAHs discussed in Compendium Method TO-13A. Judge the acceptability of recorded spectra by comparing them to spectra in libraries. If an acceptable spectrum of a calibration standard component is not acquired, take necessary actions to correct GC/MS performance. If performance cannot be corrected, report sample extract data for the particular compound(s), but document the affected compound(s) and the nature of the problem.

13.3.4.4 Calculations. Perform the following calculations to generate quantitative data:

[Note: In the following calculations, the area response is that of the primary quantitation ion unless otherwise stated.]

- **Relative Response Factors (RRFs)**. Calculate RRFs for each analyte target compound and surrogate using the following equation with the appropriate internal standard. Table 5 outlines characteristic ions for the surrogate compounds and internal standards. Table 6 outlines primary quantitation ions for each PAH. Use the following equation for RRF calculation.

$$RRF = \frac{A_x C_{is}}{A_{is} C_x}$$

where:

A_x = area of the primary quantitation ion for the compound to be measured, counts
A_{is} = area of the primary quantitation ion for the internal standard, counts
C_{is} = concentration or amount of the internal standard, ng/µL

C_x = concentration or amount of the compound to be measured, ng/µL

- **Percent Relative Standard Deviation (%RSD)**. Using the RRFs from the initial calibration, calculate the %RSD for all target compounds and surrogates using the following equations:

$$\%RSD = \frac{SD_{RRF}}{\bar{x}} \times 100$$

and

$$SD_{RRF} = \sqrt{\sum_{i=1}^{N} \frac{(x_i - \bar{x})^2}{N - 1}}$$

where:

SD_{RRF} = standard deviation of initial response factors (per compound)
x = mean of initial relative response factors (per compound)
X_i = ith RRF
N = number of determinations

- **Relative Retention Times (RRT)**. Calculate the RRTs for each target compound and surrogate over the initial calibration range using the following equation:

$$RRT = \frac{RT_c}{RT_{is}}$$

where:

RT_c = retention time of the target compound, minutes
RT_{is} = retention time of the internal standard, minutes

- **Mean of the Relative Retention Times ($\overline{RRT}$)**. Calculate the mean of the relative retention times ($\overline{RRT}$) for each analyte target compound and surrogate over the initial calibration range using the following equation:

$$\overline{RRT} = \sum_{i=1}^{n} \frac{RRT_i}{n}$$

where:

$\overline{RRT}$ = mean relative retention time for the target compound or surrogate for each initial calibration standard, minutes
RRT = relative retention time for the target compound or surrogate for each initial calibration standard, minutes

- **Mean Area Response ($\overline{Y}$) for Internal Standard**. Calculate the area response (Y) mean for primary quantitation ion each internal standard compound over the initial calibration range using the following equation:

$$\overline{Y} = \sum_{i=1}^{n} \frac{Y_i}{n}$$

where:

$\overline{Y}$ = mean area response, counts
Y_i = area response for the primary quantitation ion for the internal standard for each calibration standard, counts

- **Mean of the Retention Time ($\overline{RT}$) For Internal Standard**. Calculate the mean of the retention times ($\overline{RT}$) for each internal standard over the initial calibration range using the following equation:

$$\overline{RT} = \sum_{i=1}^{n} \frac{RT_i}{n}$$

where:
$\overline{RT}$ = mean retention time, minutes
RT = retention time for the internal standard for each initial calibration standard, minutes

13.3.4.5 Technical Acceptance Criteria. All initial calibration standards must be analyzed at the concentration levels at the frequency described in Section 13.3.3 on a GC/MS system meeting the DFTPP instrument performance check criteria.

- The relative response factor (RRF) at each calibration concentration for each target compound and surrogate that has a required minimum response factor value must be greater than or equal to the minimum acceptable relative response factor (see Table 7) of the compound.
- The percent relative standard deviation (%RSD) over the initial calibration range for each target compound and surrogate that has a required maximum %RSD must be less than or equal to the required maximum value (see Table 7). For all the other target compounds, the value for %RSD must be less than or equal to 30 percent. When the value for %RSD exceeds 30 percent, analyze additional aliquots of appropriate CALs to obtain an acceptable %RSD of RRFs over the entire concentration range, or take action to improve GC/MS performance.
- The relative retention time for each of the target compounds and surrogates at each calibration level must be within ±0.06 relative retention time units of the mean relative retention time for the compound.
- The retention time shift for each of the internal standards at each calibration level must be within ±20.0 seconds compared to the mean retention time ($\overline{RT}$) over the initial calibration range for each internal standard.
- The compounds must meet the minimum RRF and maximum %RSD criteria for the initial calibration.

13.3.4.6 Corrective Action. If the technical acceptance criteria for initial calibration are not met, the system should be inspected for problems. It may be necessary to clean the ion source, change the column, or take other corrective actions to achieve the acceptance criteria. Initial calibration technical acceptance criteria MUST

be met before any samples or required blanks are analyzed in a 12-hour time period for an initial calibration analytical sequence.

13.3.5 Continuing Calibration.

13.3.5.1 Summary. Prior to the analysis of samples and required blanks and after tuning criteria have been met, the initial calibration of each GC/MS system must be routinely checked by analyzing a continuing calibration standard (see Table 4, CAL 3) to ensure that the instrument continues to meet the instrument sensitivity and linearity requirements of the method. The continuing calibration standard (CAL 3) shall contain the appropriate target compounds, surrogates, and internal standards.

13.3.5.2 Frequency. Each GC/MS used for analysis must be calibrated once every time period of operation. The 12-hour time period begins with injection of DFTPP. If time still remains in the 12-hour time period after meeting the technical acceptance criteria for the initial calibration, samples may be analyzed. It is not necessary to analyze a continuing calibration standard within this 12-hour time period, if the initial calibration standard that is the same concentration as the continuing calibration standard meets the continuing calibration technical acceptance criteria.

13.3.5.3 Procedure. The following activities should be performed for continuing calibration:

- Set up the GC/MS system as specified by the manufacturer.
- Tune the GC/MS system to meet the technical acceptance criteria (see Section 13.3.3).
- Analyze the CAL 3 standard solution containing all the target analytes, surrogate compounds, and internal standards using the procedure listed for the initial calibration.
- Allow all standard/spiking solutions and blanks to warm to ambient temperature (approximately 1 hour) before preparation or analysis.
- Start the analysis of the continuing calibration by injecting 2.0 µL of the CAL 3 standard solution.

13.3.5.4 Calculations. The following calculations should be performed:

- **Relative Response Factor (RRF)**. Calculate a relative response factor (RRF) for each target compound and surrogate.
- **Percent Difference (%D)**. Calculate the percent difference between the mean relative response factor ($\overline{RRF}$) from the most recent initial calibration and the continuing calibration RRF for each analyte target compound and surrogate using the following equation:

$$\%D_{RRF} = \frac{RRF_c - \overline{RRF_i}}{\overline{RRF_i}} \times 100$$

where:

$\%D_{RRF}$ = percent difference between relative response factors

$\overline{RRF_i}$ = average relative response factor from the most recent initial calibration

RRF_c = relative response factor from the continuing calibration standard

13.3.5.5 Technical Acceptance Criteria. The continuing calibration standard must be analyzed for the compounds listed in concentration levels at the frequency described and on a GC/MS system meeting the DFTPP instrument performance check and the initial calibration technical acceptance criteria. The relative response factor for each target analyte and surrogate that has a required minimum relative response factor value must be greater than or equal to the compound's minimum acceptable relative response factor. For an acceptable

continuing calibration, the %D between the measured RRF for each target/surrogate compound of the CAL 3 standard and the mean value calculated during initial calibration must be within ±30 percent. If the criteria for %D are not met for the target or surrogate compounds, remedial action must be taken and recalibration may be necessary.

13.3.5.6 Corrective Action. If the continuing calibration technical acceptance criteria are not met, recalibrate the GC/MS instrument. It may be necessary to clean the ion source, change the column, or take other corrective actions to achieve the acceptance criteria. Continuing calibration technical acceptance criteria *MUST* be met before any samples or required blanks are analyzed in a 12-hour continuing calibration analytical sequence. Any samples or required blanks analyzed when continuing calibration criteria were not met will require reanalysis. Remedial actions, which include but are not limited to the following, must be taken if criteria are not met:

- Check and adjust GC and/or MS operating conditions.
- Clean or replace injector liner.
- Flush column with solvent according to manufacturers instructions.
- Break off a short portion (approximately 0.33 cm) of the column.
- Replace the GC column (performance of all initial calibration procedures are then required).
- Adjust MS for greater or lesser resolution.
- Calibrate MS mass scale.
- Prepare and analyze new continuing calibration.
- Prepare a new initial calibration curve.

13.3.6 Laboratory Method Blank (LMB).

13.3.6.1 Summary. The purpose of the LMB is to monitor for possible laboratory contamination. Perform all steps in the analytical procedure using all reagents, standards, surrogate compounds, equipment, apparatus, glassware, and solvents that would be used for a sample analysis. An LMB is an unused, certified filter/cartridge assembly which is carried though the same extraction procedure as a field sample. The LMB extract must contain the same amount of surrogate compounds and internal standards that is added to each sample. All field samples must be extracted and analyzed with an associated LMB.

13.3.6.2 Frequency. Analyze an LMB along with each batch of ≤20 samples through the entire extraction, concentration, and analysis process. The laboratory may also analyze a laboratory reagent blanks which is the same as an LMB except that no surrogate compounds or internal standards are added. This demonstrates that reagents contain no impurities producing an ion current above the level of background noise for quantitation ions for those compounds.

13.3.6.3 Procedure. Extract and analyze a clean, unused filter and glass cartridge assembly.

13.3.6.4 Technical Acceptance Criteria. Following are the technical criteria for the LMB:

- All blanks must be analyzed on a GC/MS system meeting the DFTPP instrument performance check and initial calibration or continuing calibration technical acceptance criteria.
- The percent recovery for each of the surrogates in the blank must be within the acceptance windows.
- The area response change for each of the internal standards for the blank must be within -50 percent and +100 percent compared to the internal standards in the most recent continuing calibration analysis.
- The retention time for each of the internal standards must be within ±20.0 seconds between the blank and the most recent CAL 3 analysis.
- The LMB must not contain any target analyte at a concentration greater than the MDL and must not contain additional compounds with elution characteristics and mass spectral features that would interfere

with identification and measurement of a method analyte at its MDL. If the LMB that was extracted along with a batch of samples is contaminated, the entire batch of samples must be flagged.

13.3.6.5 Corrective Action. Perform the following if the LCBs exceed criteria:

- If the blanks do not meet the technical acceptance criteria, the analyst must consider the analytical system to be out of control. It is the analyst's responsibility to ensure that method interferences caused by contaminants in solvents, reagents, glassware, and other sample storage and processing hardware that lead to discrete artifacts and/or elevated baselines in gas chromatograms be eliminated. If contamination is a problem, the source of the contamination must be investigated and appropriate corrective measure *MUST* be taken and documented before further sample analysis proceeds.
- All samples processed with a method blank that is out of control (i.e., contaminated) will require data qualifiers to be attached to the analytical results.

13.3.7 Laboratory Control Spike (LCS).

13.3.7.1 Summary. The purpose of the LCS is to monitor the extraction efficiency of Compendium Method TO-13A target analytes from a clean, uncontaminated PUF cartridge. An LCS is an unused, certified PUF that is spiked with the target analytes (1 μg) and carried through the same extraction procedures as the field samples. The LCS must contain the same amount of surrogate compounds and internal standards that is added to each sample. All field samples must be extracted and analyzed with an associated LCS. All steps in the analytical procedure must use the same reagents, standards, surrogate compounds, equipment, apparatus, glassware, and solvents that would be used for a sample analysis.

13.3.7.2 Frequency. Analyze an LCS along with each of $\leq$20 samples through the entire extraction, concentration, and analysis. (The laboratory may also analyze a laboratory reagent blank which is the same as an LMB except that no surrogate compounds or internal standards are added. This demonstrates that reagents contain no impurities producing an ion current above the level of background noise for quantitation ions of those compounds.)

13.3.7.3 Procedure. Extract and analyze a clean, unused certified PUF cartridge assembly.

13.3.7.4 Technical Acceptance Criteria. Technical criteria for the LCS are:

- All LCSs must be analyzed on a GC/MS system meeting the DFTPP instrument performance check and initial calibration or continuing calibration technical acceptance criteria.
- The percent recovery for each of the surrogates in the LCS must be within the acceptance windows.
- The area response change for each of the internal standards for the LCS must be within -50 percent and +100 percent compared to the internal standards in the most recent continuing calibration analysis.
- The retention time for each of the internal standards must be within ±20.0 seconds between the LCS and the most recent CAL 3 analysis.
- All target analytes spiked on the certified PUF cartridge must meet a percent recovery between 60-120 to be acceptable.

13.3.7.5 Corrective Action. Perform the following if the LCS exceed criteria:

- If the LCS do not meet the technical acceptance criteria, the analyst must consider the analytical system to be out of control. It is the analyst's responsibility to ensure that method interferences caused by contaminants in solvents, reagents, glassware, and other sample storage and processing hardware that lead to discrete artifacts and/or elevated baselines in gas chromatograms be eliminated. If contamination is a problem, the source of the contamination must be investigated and appropriate corrective measure *MUST* be taken and documented before further sample analysis proceeds.

- All samples processed with a LCS that is out of control (i.e., contaminated) will require re-analysis or data qualifiers to be attached to the analytical results.

13.4 Sample Analysis by GC/MS

13.4.1 Summary. The sample extract is analyzed by GC/MS and quantitated by the internal standard method.

13.4.2 Frequency. Before samples can be analyzed, the instrument must meet the GC/MS tuning and initial calibration or continuing calibration technical acceptance criteria. If there is time remaining in the 12-hour time period with a valid initial calibration or continuing calibration, samples may be analyzed in the GC/MS system that meet the instrument performance check criteria.

13.4.3 Procedure. For sample analysis, perform the following:

- Set up the GC/MS system.
- All sample extracts must be allowed to warm to ambient temperature (~1 hour) before analysis. All sample extracts must be analyzed under the same instrumental conditions as the calibration standards.
- Add the internal standard spiking solution to the 1.0 mL extract. For sample dilutions, add an appropriate amount of the internal standard spiking solution to maintain the concentration of the internal standards at 2 ng/µL in the diluted extract.
- Inject 2.0 µL of sample extract into the GC/MS, and start data acquisition.
- When all semi-volatile target compounds have eluted from the GC, terminate the MS data acquisition and store data files on the data system storage device. Use appropriate data output software to display full range mass spectra and SICPs. The sample analysis using the GC/MS is based on a combination of retention times and relative abundances of selected ions (see Table 6). These qualifiers should be stored on the hard disk of the GC/MS data computer and are applied for identification of each chromatographic peak. The retention time qualifier is determined to be +0.10 minute of the library retention time of the compound. The acceptance level for relative abundance is determined to be ±15% of the expected abundance. Three ions are measured for most of the PAH compounds. When compound identification is made by the computer, any peak that fails any of the qualifying tests is flagged (e.g., with an *). The data should be manually examined by the analyst to determine the reason for the flag and whether the compound should be reported as found. Although this step adds some subjective judgment to the analysis, computer-generated identification problems can be clarified by an experienced operator. Manual inspection of the quantitative results should also be performed to verify concentrations outside the expected range.

13.4.4 Dilutions. The following section provides guidance when an analyte exceeds the calibration curve.

- When a sample extract is analyzed that has an analyte target compound concentration greater than the upper limit of the initial calibration range or saturated ions from a compound excluding the compound peaks in the solvent front), the extract must be diluted and reanalyzed. Secondary ion quantitation is *only* allowed when there are sample interferences with the primary quantitation ion. If secondary ion quantitation is used, calculate a relative response factor using the area response for the most intense secondary ion which is free of sample interferences, and document the reasons for the use of the secondary ion.
- Calculate the sample dilution necessary to keep the semi-volatile target compounds that required dilution within the upper half of the initial calibration range so that no compound has saturated ions (excluding the compound peaks in the solvent front). Dilute the sample in hexane in a volumetric flask. Analyze the sample dilution.

- The dilution factor chosen should keep the response of the largest peak for a *target compound* in the upper half of the initial calibration range of the instrument.
- If the on-column concentration of any target compound in any sample exceeds the initial calibration range, that sample must be diluted, the internal standard concentration readjusted, and the sample extract reanalyzed.
- Use the results of the original analysis to determine the approximate dilution factor required to get the largest analyte peak within the initial calibration range.

13.4.5 Quantitation. This section provides guidance for quantitating PAH analytes.

- Target components identified shall be quantified by the internal standard method. The internal standards used for the target compounds are the ones nearest the retention time of a given analyte.
- The relative response factor (RRF) from the daily continuing calibration standard analysis (or RRF of CAL 3) if the sample is analyzed in the same 12-hour sequence as the initial calibration) is used to calculate the concentration in the sample. Secondary ion quantitation is allowed *only* when there are sample interferences with the primary ion. If secondary ion quantitation is performed, document the reasons. The area of a secondary ion cannot be substituted for the area of a primary ion unless a relative response factor is calculated using the secondary ion.
- A retention time window is calculated for each single component analyte and surrogate. Windows are established as ±0.01 RRT units of the retention time for the analyte in CAL 3 of the initial calibration or the continuing calibration.

13.4.6 Calculations. Perform the following calculations:

13.4.6.1 Calculation of Concentration. Calculate target compound concentrations using the following equation:

$$\text{Concentration, (ng/std m}^3) = \frac{A_x I_s V_t D_f}{A_{is} V_i \overline{RRF}}$$

where:

A_x = area response for the compound to be measured, counts
A_{is} = area response for the internal standard, counts
I_s = amount of internal standard, ng/µL
$\overline{RRF}$ = the mean RRF from the most recent initial calibration, dimensionless
V_i = volume of air sampled, std m^3
V_t = volume of final extract, µL
D_f = dilution factor for the extract. If there was no dilution, D_f equals 1. If the sample was diluted, the D_f is greater than 1.

The concentrations calculated can be converted to ppb_v for general reference. The analyte concentration can be converted to ppb_v using the following equation:

$$C_A(ppb_v) = C_A(ng/m^3) \times 24.4/MW_A$$

where:

C_A = concentration of analyte calculated, ng/std. m^3
MW_A = molecular weight of analyte, g/g-mole
24.4 = molar volume occupied by ideal gas at standard temperature and pressure (25°C and 760 mm Hg), L/mole.

13.4.6.2 Estimated Concentration. The equation in Section 13.4.6.1 is also used for calculating the concentrations of the non-target compounds. Total area counts (or peak heights) from the total ion chromatogram generated by the mass spectrometer for Compendium Method TO-13A PAHs (see Figure 16) are to be used for both the non-target compound to be measured (A_x) and the internal standard (A_{is}). Associate the nearest internal standard free of interferences with the non-target compound to be measured. A relative response factor (RRF) of one (1) is to be assumed. The value from this quantitation shall be qualified as estimated ("J") (estimated, due to lack of a compound-specific response factor) and "N" (presumptive evidence of presence), indicating the quantitative and qualitative uncertainties associated with this non-target component. An estimated concentration should be calculated for all tentatively identified compounds (TICs) as well as those identified as unknowns.

13.4.6.3 Surrogate Percent Recovery (%R). Calculate the surrogate percent recovery using the following equation:

$$\%R = \frac{Q_d}{Q_a} \times 100$$

where:
Q_d = Quantity determined by analysis, ng
Q_a = Quantity added to sample/blank, ng

The surrogate percent recovery must fall between 60-120% to be acceptable.

13.4.6.4 Percent Area Response Change (%ARC). Calculate the percent area response change (%ARC) for the sample/blank analysis compared to the most recent CAL 3 analysis for each of the internal standard compounds using the following equation:

$$\%ARC = \frac{A_s - A_x}{A_x} \times 100$$

where:
%ARC = percent area response change, %
A_s = area response of the internal standard in the sample/blank analysis, counts
A_x = area response of the internal standard in the most recent CAL 3 analysis, counts

The area change for the internal standard must not exceed -50 to +100 percent.

13.4.6.5 Internal Standard Retention Time Shift (RTS). Calculate the retention time shift (RTS) between the sample/blank analysis and the most recent CAL 3 analysis for each of the internal standards using the following equation:

$$RTS = RT_s - RT_x$$

where:

RT_s = retention time of the IS in the sample
RT_x = retention time of the IS in the most recent CAL 3 analysis.

13.4.7 Technical Acceptance Criteria. The following guideline is provided as technical acceptance criteria.

13.4.7.1 All target compound concentrations must not exceed the upper limit of the initial calibration range and no compound ion (excluding the compound peaks in the solvent front) may saturate the detector.

13.4.7.2 Internal standard responses and retention times in all samples must be evaluated during or immediately after data acquisition. If the retention time for any internal standard changes by more than 20 seconds from the latest continuing calibration standard or CAL 3 if samples are analyzed in the same 12-hour sequence as the initial calibration, the chromatographic system must be inspected for malfunctions, and corrections made as required. The SICP of the internal standards must be monitored and evaluated for each field and QC sample. If the SICP area for any internal standard changes by more than a factor of -50 to +100 percent, the mass spectrometric system must be inspected for malfunction and corrections made as appropriate. If the analysis of a subsequent sample or standard indicates that the system is functioning properly, then corrections may not be required.

13.4.7.3 When target compounds are below the low standard, but the spectrum meets the identification criteria, report the concentration/amount with a "J." For example, if the low standard corresponds to 0.1μg and an amount of 0.05 μg is calculated, report as "0.05J."

13.4.8 Corrective Action. The following section provides guidance if analyte exceeds the technical criteria.

- If the sample technical acceptance criteria for the surrogates and internal standards are not met, check calculations, surrogate and internal standard solutions, and instrument performance. It may be necessary to recalibrate the instrument or take other corrective action procedures to meet the surrogate and internal standard technical acceptance criteria.
- Sample analysis technical acceptance criteria *must* be met before data are reported. Samples contaminated from laboratory sources, or associated with a contaminated method blank, or any samples analyzed that are not meet the technical acceptance criteria will require reanalysis.
- The samples or standards with SICP areas outside the limits must be reanalyzed. If corrections are made, then the laboratory must demonstrate that the mass spectrometric system is functioning properly. This must be accomplished by the analysis of a standard or sample that meets the SICP criteria. After corrections are made, the reanalysis of samples analyzed while the system was malfunctioning is required.
- If after reanalysis, the SICP areas for all internal standards are inside the technical acceptance limits (-50 to +100 percent), then the problem with the first analysis is considered to have been within the control of the laboratory. Therefore, submit *only* data from the analysis with SICPs within the technical acceptance limits. This is considered the *initial* analysis and must be reported as such on all data deliverables.
- If the reanalysis of the sample does not solve the problem (i.e., the SICP areas are outside the technical acceptance limits for both analyses) then the laboratory must submit the SICP data and sample data from both analyses. Distinguish between the initial analysis and the reanalysis on all data deliverables, using the sample suffixes specified.
- Tentative identification of an analyte occurs when a peak from a sample extract falls within the daily retention time window.
- If sample peaks are not detected, or all are less than full-scale deflection, the undiluted extract is acceptable for GC/MS analysis. If any sample ions are greater than the 120 percent of the initial calibration curve range, calculate the dilution necessary to reduce the major ion to between half- and full-range response.

14. Quality Assurance/Quality Control (QA/QC)

14.1 General System QA/QC

14.1.1 Each laboratory that uses Compendium Method TO-13A must operate a formal quality control program. The minimum requirements of this program consist of an initial demonstration of laboratory capability and an ongoing analysis of spiked samples to evaluate and document quality data. The laboratory must maintain records to document the quality of the data generated. Ongoing data quality checks are compared with established performance criteria to determine if the results of analyses meet the performance characteristics of the method. When results of sample spikes indicate a typical method performance, a quality control check standard must be analyzed to confirm that the measurements were performed in an in-control mode of operation**.**

14.1.2 Before processing any samples, the analyst should demonstrate, through the analysis of a reagent solvent blank, that interferences from the analytical system, glassware, and reagents are under control. Each time a set of samples is extracted or there is a change in reagents, a reagent solvent blank should be processed as a safeguard against chronic laboratory contamination. The blank samples should be carried through all stages of the sample preparation and measurement steps.

14.1.3 For each analytical batch (up to 20 samples), a reagent blank, matrix spike, and deuterated/surrogate samples must be analyzed (the frequency of the spikes may be different for different monitoring programs). The blank and spiked samples must be carried through all stages of the sample preparation and measurement steps.

14.1.4 The experience of the analyst performing GC/MS is invaluable to the success of the methods. Each day that analysis is performed, the daily calibration sample should be evaluated to determine if the chromatographic system is operating properly. Questions that should be asked are: Do the peaks look normal? Are the response windows obtained comparable to the response from previous calibrations? Careful examination of the standard chromatogram can indicate whether the column is still good, the injector is leaking, the injector septum needs replacing, etc. If any changes are made to the system (e.g., column changed), recalibration of the system must take place.

14.2 Process, Field, and Solvent Blanks

14.2.1 One PUF cartridge and filter from each batch of approximately 20 should be analyzed without shipment to the field for the compounds of interest to serve as a process blank. A blank level specified in Section 10.2 for each cartridge/filter assembly is considered to be acceptable.

14.2.2 During each sampling episode, at least one cartridge and filter should be shipped to the field and returned, without drawing air through the sampler, to serve as a field blank.

14.2.3 During the analysis of each batch of samples at least one solvent process blank (all steps conducted but no cartridge or filter included) should be carried through the procedure and analyzed. Blank levels should be those specified in Section 10.2 for single components to be acceptable.

14.2.4 Because the sampling configuration (filter and backup sorbent) has been tested for targeted PAHs in the laboratory in relationship to collection efficiency and has been demonstrated to be greater than 95 percent for targeted PAHs (except naphthalene, acenaphthylene, and acenaphthene), no field recovery evaluation is required as part of the QA/QC program outlined in this section.

15. References

1. Dubois, L., Zdrojgwski, A., Baker, C., and Monknao, J.L., "Some Improvement in the Determination of Benzo[a]Pyrene in Air Samples," *J. Air Pollut. Contr. Assoc.*, 17:818-821, 1967.

2. Intersociety Committee, "Tentative Method of Analysis for Polynuclear Aromatic Hydrocarbon of Atmospheric Particulate Matter," *Health Laboratory Science*, 7(1):31-40, 1970.

3. Cautreels, W., and Van Cauwenberghe, K., "Experiments on the Distribution of Organic Pollutants Between Airborne Particulate Matter and Corresponding Gas Phase," *Atmos. Environ.*, 12:1133-1141, 1978.

4. "Tentative Method of Microanalysis for Benzo[a]Pyrene in Airborne Particles and Source Effluents," American Public Health Association, *Health Laboratory Science*, 7(1):56-59, 1970.

5. "Tentative Method of Chromatographic Analysis for Benzo[a]Pyrene and Benzo[k]Fluoranthene in Atmospheric Particulate Matter," American Public Health Association, *Health Laboratory Science*, 7(1):60-67, 1970.

6. "Tentative Method of Spectrophotometric Analysis for Benzo[a]Pyrene in Atmospheric Particulate Matter," American Public Health Association, *Health Laboratory Science*, 7(1):68-71, 1970.

7. Jones, P.W., Wilkinson, J.E., and Strup, P.E., *Measurement of Polycyclic Organic Materials and Other Hazardous Organic Compounds in Stack Gases: State-of-the-Art*, U. S. Environmental Protection Agency, Research Triangle Park, NC, U.S. EPA-600/2-77-202, 1977.

8. Walling, J.F., *Standard Operating Procedure for Ultrasonic Extraction and Analysis of Residual Benzo[a]Pyrene from Hi-Vol Filters via Thin-Layer Chromatography*, U.S. Environmental Protection Agency, Environmental Monitoring Systems Laboratory, Methods Development and Analysis Division, Research Triangle Park, NC, EMSL/RTP-SOP-MDAD-015, December, 1986.

9. Rasor, S., *Standard Operating Procedure for Polynuclear Aromatic Hydrocarbon Analysis by High Performance Liquid Chromatography Methods*, Acurex Corporation, Research Triangle Park, NC, 1978.

10. Rapport, S. W., Wang, Y. Y., Wei, E. T., Sawyer, R., Watkins, B. E., and Rapport, H., "Isolation and Identification of a Direct-Acting Mutagen in Diesel Exhaust Particulates," *Envir. Sci. Technol.*, 14:1505-1509, 1980.

11. Konlg, J., Balfanz, E., Funcke, W., and Romanowski, T., "Determination of Oxygenated Polycyclic Aromatic Hydrocarbons in Airborne Particulate Matter by Capillary Gas Chromatography and Gas Chromatography/Mass Spectrometry," *Anal. Chem.*, 55:599-603, 1983.

12. Chuang, J. C., Bresler, W. E., and Hannan, S. W., *Evaluation of Polyurethane Foam Cartridges for Measurement of Polynuclear Aromatic Hydrocarbons in Air*, U.S. Environmental Protection Agency, Environmental Monitoring Systems Laboratory, Methods Development and Analysis Division, Research Triangle Park, NC, EPA-600/4-85-055, September 1985.

13. Chuang, J. C., Hannan, S. W., and Koetz, J. R., *Stability of Polynuclear Aromatic Compounds Collected from Air on Quartz Fiber Filters and XAD-2 Resin*, U.S. Environmental Protection Agency, Environmental Monitoring Systems Laboratory, Methods Development and Analysis Division, Research Triangle Park, NC, EPA-600/4-86-029, September 1986.

14. Feng, Y., and Bidleman, T. F., "Influence of Volatility on the Collection of Polynuclear Aromatic Hydrocarbon Vapors with Polyurethane Foam," *Envir. Sci. Technol.*, 18:330-333, 1984.

15. Yamasaki, H., Kuwata, K., and Miyamoto, H., "Effects of Ambient Temperature on Aspects of Airborne Polycyclic Aromatic Hydrocarbons," *Envir. Sci. Technol.*, 16:89-194, 1982.

16. Galasyn, J. F., Hornig, J. F., and Soderberg, R. H., "The Loss of PAH from Quartz Fiber High Volume Filters," *J. Air Pollut. Contr. Assoc.*, 34:57-59, 1984.

17. You, F., and Bidleman, T. F., "Influence of Volatility on the Collection of Polynuclear Aromatic Hydrocarbon Vapors with Polyurethane Foam," *Envir. Sci. Technol.*, 18:330-333, 1984.

18. Chuang, J. C., Hannan, S. W., and Koetz, J. R., *Comparison of Polyurethane Foam and XAD-2 Resin as Collection Media for Polynuclear Aromatic Hydrocarbons in Air*, U.S. Environmental Protection Agency, Environmental Monitoring Systems Laboratory, Methods Development and Analysis Division, Research Triangle Park, NC, EPA-600/4-86-034, December 1986.

19. Chuang, J. C., Mack, G. A., Mondron, P. J., and Peterson, B. A., *Evaluation of Sampling and Analytical Methodology for Polynuclear Aromatic Compounds in Indoor Air*, U.S. Environmental Protection Agency, Environmental Monitoring Systems Laboratory, Methods Development and Analysis Division, Research Triangle Park, NC, EPA-600/4-85-065, January 1986.

20. Lewis, R. G., Brown, A. R., and Jackson, M. D., "Evaluation of Polyurethane Foam for High-Volume Air Sampling of Ambient Levels of Airborne Pesticides, Polychlorinated Biphenyls, and Polychlorinated Naphthalenes," *Anal. Chem.*, 49:1668-1672, 1977.

21. Lewis, R. G., and Jackson, M. D., "Modification and Evaluation of a High-Volume Air Sampler for Pesticides and Other Semi-volatile Industrial Organic Chemicals," *Anal. Chem.*, 54:592-594, 1982.

22. Winberry, W. T., and Murphy, N. T., *Supplement to Compendium of Methods for the Determination of Toxic Organic Compounds in Ambient Air*, U.S. Environmental Protection Agency, Environmental Monitoring Systems Laboratory, Quality Assurance Division, Research Triangle Park, NC, EPA-600/4-87-006, September 1986.

23. Winberry, W. T., and Murphy, N. T., *Second Supplement to Compendium of Methods for the Determination of Toxic Organic Compounds in Ambient Air*, U.S. Environmental Protection Agency, Environmental Monitoring Systems Laboratory, Quality Assurance Division, Research Triangle Park, NC, EPA 600/4-89-018, June 1989.

24. *Methods for Organic Chemical Analysis of Municipal and Industrial Wastewater*, U.S. Environmental Protection Agency, Environmental Monitoring and Support Laboratory, Cincinnati, OH, EPA-600/4-82-057, July 1982.

25. *ASTM Annual Book of Standards*, Part 31, D 3694, "Standard Practice for Preparation of Sample Containers and for Preservation," American Society for Testing and Materials, Philadelphia, PA, p. 679, 1980.

26. Burke, J. A., "Gas Chromatography for Pesticide Residue Analysis; Some Practical Aspects," *Journal of the Association of Official Analytical Chemists*, 48:1037, 1965.

27. Cole, T., Riggin, R., and Glaser, J., *Evaluation of Method Detection Limits: Analytical Curve for EPA Method 610 - PNAs*, 5th International Symposium on Polynuclear Aromatic Hydrocarbons, Battelle, Columbus, OH, 1980.

28. *Handbook of Analytical Quality Control in Water and Wastewater Laboratories*, U.S. Environmental Protection Agency, Environmental Monitoring and Support Laboratory, Cincinnati, OH, EPA-600/4-79-019, March 1979.

29. *ASTM Annual Book of Standards*, Part 31, D 3370, "Standard Practice for Sampling Water," American Society for Testing and Materials, Philadelphia, PA, p. 76, 1980.

30. *Protocol for the Collection and Analysis of Volatile POHC's (Principal Organic Hazardous Constituents) Using VOST (Volatile Organic Sampling Train)*, U. S. Environmental Protection Agency, Research Triangle Park, NC, EPA-600/8-84-007, March 1984.

31. *Sampling and Analysis Methods for Hazardous Waste Combustion - Methods 3500, 3540, 3610, 3630, 8100, 8270, and 8310; Test Methods for Evaluating Solid Waste* (SW-846), U.S. Environmental Protection Agency, Office of Solid Waste, Washington, D.C.

32. Riggin, R. M., *Compendium of Methods for the Determination of Toxic Organic Compounds in Ambient Air*, U.S. Environmental Protection Agency, Environmental Monitoring Systems Laboratory, Quality Assurance Division, Research Triangle Park, NC, EPA-600/4-84-041, April 1984.

33. Chuang, C. C., and Peterson, B. A., *Review of Sampling and Analysis Methodology for Polynuclear Aromatic Compounds in Air from Mobile Sources, Final Report*, U. S. Environmental Protection Agency, Research Triangle Park, NC, EPA-600/S4-85-045, August 1985.

34. *Measurement of Polycyclic Organic Matter for Environmental Assessment*, U.S. Environmental Protection Agency, Industrial Environmental Research Laboratory, Research Triangle Park, NC, EPA-600/7-79-191, August 1979.

35. Hudson, J. L., *Standard Operating Procedure No. FA 113C: Monitoring for Particulate and Vapor Phase Pollutants Using the Portable Particulate/Vapor Air Sampler*, U.S. Environmental Protection Agency, Region VII, Environmental Monitoring and Compliance Branch, Environmental Services Division, Kansas City, KS, March 1987.

36. Trane, K. E., and Mikalsen, A., "High-Volume Sampling of Airborne Polycyclic Aromatic Hydrocarbons Using Glass Fibre Filters and Polyurethane Foam," *Atmos. Environ.*, 15:909-918, 1981.

37. Keller, C. D., and Bidleman, T. F., "Collection of Airborne Polycyclic Hydrocarbons and Other Organics with a Glass Fiber Filter - Polyurethane Foam System," *Atmos. Environ.*, 18:837-845, 1984.

38. Hunt, G. T., and Pangaro, N., "Ambient Monitoring of Polynuclear Aromatic Hydrocarbons (PAHs) Employing High Volume Polyurethane Foam (PUF) Samplers," In *Polynuclear Aromatic Hydrocarbons*, Cooke, M., Dennis, and A. J., Eds, Battelle Press, Columbus, OH, pp. 583-608, 1985.

39. Alfeim, I., and Lindskog, A., "A Comparison Between Different High Volume Sampling Systems for Collecting Ambient Airborne Particles for Mutagenicity Testing and for Analysis of Organic Compounds," *Sci. Total Environ.*, 34:203-222, 1984.

40. Umlauf, G., and Kaupp, H., "A Sampling Device for Semivolatile Organic Compounds in Ambient Air," *Chemosphere*, 27:1293-1296, 1993.

41. Hippelein, M., Kaupp, H., Dorr, G., and McLachlan, M. S., "Testing of a Sampling System and Analytical Method for Determination of Semivolatile Organic Chemicals in Air," *Chemosphere*, 26:2255-2263, 1993.

42. Ligocki, M. P., and Ponkow, J. F., "Assessment of Adsorption/Solvent Extraction with Polyurethane Foam and Adsorption/Thermal Desorption with Tenax-GC for Collection and Analysis of Ambient Organic Vapors," *Anal. Chem.*, 57:1138-1144, 1985.

43. Yamasaki, H., Kuwata, K., and Miyamoto, H., "Effects of Ambient Temperature on Aspects of Airborne Polycyclic Aromatic Hydrocarbons," *Envir. Sci. Technol.*, 16:189-194, 1982.

44. Hart, K. M., and Pankow, J. F., "High-Volume Air Sampler for Particle and Gas Sampling: Use of Backup Filters to Correct for the Adsorption of Gas-Phase Polycyclic Aromatic Hydrocarbons to the Front Filter," *Envir. Sci. Technol.*, 28:655-661, 1994.

45. Kaupp, H., and Umlauf, G., "Atmospheric Gas-Particle Partitioning of Organic Compounds: Comparison of Sampling Methods," *Atmos. Environ.*, 13:2259-2267, 1992.

46. Coutant, R. W., Brown, L., Chuang, J. C., Riggin, R. M., and Lewis, R. G., "Phase Distribution and Artifact Formation in Ambient Air Sampling for Polynuclear Aromatic Hydrocarbons," *Atmos. Environ.*, 22:403-409, 1988.

47. Coutant, R. W., Callahan, P. J., Kuhlman, M. R., and Lewis, R. G., "Design and Performance of a High-Volume Compound Annular Denuder," *Atmos. Environ.*, 23:2205-2211.

48. Lewis, R. G., Kelly, T. J., Chuang, J. C., Callahan, P. J., and Coutant, R. W., "Phase Distributions of Airborne Polycyclic Aromatic Hydrocarbons in Two U.S. Cities," In *Proceedings of the 9th World Clean Air Congress & Exhibition*, Montreal, Ontario, Canada, 1991, Vol., Paper IU-11E.02.

49. Kaupp, H., and Umlauf, G., "Atmospheric Gas-Particle Partitioning of Organic Compounds: Comparison of Sampling Methods," *Atmos. Environ.*, 26A:2259-2267, 1992.

50. Riggin, R. M., *Technical Assistance Document for Sampling and Analysis of Toxic Organic Compounds in Ambient Air*, U.S. Environmental Protection Agency, Environmental Monitoring Systems Laboratory, Quality Assurance Division, Research Triangle Park, NC, EPA-600/4-83-027, June 1983.

51. *ASTM Annual Book of Standards*, Part 31, D 3694, "Standard Practice for Preparation of Sample Containers and for Preservation," American Society for Testing and Materials, Philadelphia, PA, p. 679, 1980.

52. *Carcinogens - Working with Carcinogens*, Department of Health, Education, and Welfare, Public Health Service, Center for Disease Control, National Institute for Occupational Safety and Health, Publication No. 77-206, August 1977.

53. *OSHA Safety and Health Standards, General Industry*, (29CFR1910), Occupational Safety and Health Administration, OSHA, 2206, Revised, January 1976.

54. "Safety in Academic Chemistry Laboratories," American Chemical Society Publication, Committee on Chemical Safety, 3rd Edition, 1979.

TABLE 1. FORMULAE AND PHYSICAL PROPERTIES OF SELECTED PAHs

Compound	Formula	Molecular Weight	Melting Point, °C	Boiling Point, °C	Vapor Pressure, kPa	CAS RN #
Naphthalene	$C_{10}H_8$	128.18	80,2	218	1.1x10	91-20-3
Acenaphthylene	$C_{12}H_8$	152.20	92-93	265-280	3.9x10	208-96-8
Acenaphthene	$C_{12}H_{10}$	154.20	90-96	278-279	2.1x10	83-32-9
Fluorene	$C_{13}H_{10}$	166.23	116-118	293-295	8.7x10	86-73-7
Anthracene	$C_{14}H_{10}$	178.24	216-219	340	36x10	120-12-7
Phenanthrene	$C_{14}H_{10}$	178.24	96-101	339-340	2.3x10	85-01-8
Fluoranthene	$C_{16}H_{10}$	202.26	107-111	375-393	6.5x10	206-44-0
Pyrene	$C_{16}H_{10}$	202.26	150-156	360-404	3.1x10	129-00-0
Benz(a)anthracene	$C_{18}H_{12}$	228.30	157-167	435	1.5x10	56-55-3
Chrysene	$C_{18}H_{12}$	228.30	252-256	441-448	5.7x10	218-01-9
Benzo(b)fluoranthene	$C_{20}H_{12}$	252.32	167-168	481	6.7x10	205-99-2
Benzo(k)fluoranthene	$C_{20}H_{12}$	252.32	198-217	480-471	2.1x10	207-08-9
Perylene	$C_{20}H_{12}$	252.32	273-278	500-503	7.0x10	198-55-8
Benzo(a)pyrene	$C_{20}H_{12}$	252.32	177-179	493-496	7.3x10	50-32-8
Benzo(e)pyrene	$C_{20}H_{12}$	252.32	178-179	493	7.4x10	192-92-2
Benzo(g,h,i)perylene	$C_{22}H_{12}$	276.34	275-278	525	1.3x10	191-24-2
Indeno(1,2,3-cd)pyrene	$C_{22}H_{12}$	276.34	162-163	--	ca.10	193-39-5
Dibenz(a,h)anthracene	$C_{22}H_{14}$	278.35	266-270	524	1.3x10	53-70-3
Coronene	$C_{24}H_{12}$	300.36	438-440	525	2.0x10	191-07-1

Many of these compounds sublime.

TABLE 2. GC-MS OPERATING CONDITIONS

Activity	Conditions
Gas Chromatography	
Column	J&W Scientific, DB-5 crosslinked 5% phenylmethyl silicone (30 m x 0.32 mm, 1.0 µm film thickness) or equivalent
Carrier Gas	Helium, velocity between 28-30 cm^3/sec at 250°C
Injection Volume	2 µL, Grob-type, splitless
Injector Temperature	290°C
Temperature Program	
Initial Column Temperature	70°C
Initial Hold Time	4 ± 0.1 min.
Program	10°C/min to 300°C and hold 10 min.
Final Temperature	300°C
Final Hold Time	10 min. or until all compounds of interest have eluted
Mass Spectrometer	
Transfer Line Temperature	290°C or According to Manufacturer's Specification
Source Temperature	According to Manufacturer's Specifications
Electron Energy	70 volts (nominal)
Ionization Mode	EI
Mass Range	35 to 500 amu, full range data acquisition (SCAN) mode
Scan Time	At least 5 scans per peak, not to exceed 1 second per scan.

TABLE 3. DFTPP KEY IONS & ION ABUNDANCE CRITERIA

Mass	Ion Abundance Criteria
51	30 to 60% of mass 198
68 70	Less than 2% of mass 69 Less than 2% of mass 69
127	40 to 60% of mass 198
197 198 199	Less than 2% of mass 198 Base peak, 100% relative abundance 5 to 9% of mass 198
275	10 to 30% of mass 198
365	Greater than 1.0% of mass 198
441 442 443	Present but less than mass 443 40% of mass 198 17 to 23% of mass 442

TABLE 4. COMPOSITION AND APPROXIMATE CONCENTRATION OF CALIBRATION SOLUTIONS

Target Compound	Concentration, ng/µL				
	CAL 1	CAL 2	CAL 3	CAL 4	CAL 5
PAHs	0.10	0.25	0.50	1.25	2.50
Acenaphthene	0.10	0.25	0.50	1.25	2.50
Acenaphthylene	0.10	0.25	0.50	1.25	2.50
Anthracene	0.10	0.25	0.50	1.25	2.50
Benz(a)anthracene	0.10	0.25	0.50	1.25	2.50
Benzo(a)pyrene	0.10	0.25	0.50	1.25	2.50
Benzo(b)fluoranthene	0.10	0.25	0.50	1.25	2.50
Benzo(e)pyrene	0.10	0.25	0.50	1.25	2.50
Benzo(g,h,i)perylene	0.10	0.25	0.50	1.25	2.50
Benzo(k)fluoranthene	0.10	0.25	0.50	1.25	2.50
Chrysene	0.10	0.25	0.50	1.25	2.50
Perylene	0.10	0.25	0.50	1.25	2.50
Dibenz(a,h)anthracene	0.10	0.25	0.50	1.25	2.50
Fluoranthene	0.10	0.25	0.50	1.25	2.50
Fluorene	0.10	0.25	0.50	1.25	2.50
Indeno(1,2,3-c,d)pyrene	0.10	0.25	0.50	1.25	2.50
Naphthalene	0.10	0.25	0.50	1.25	2.50
Coronene	0.10	0.25	0.50	1.25	2.50
Phenanthrene	0.10	0.25	0.50	1.25	2.50
Pyrene	0.10	0.25	0.50	1.25	2.50

TABLE 4. (Continued)

Target Compound	Concentration, ng/µL				
	CAL 1	CAL 2	CAL 3	CAL 4	CAL 5
SUGGESTED INTERNAL STANDARDS					
D_8-Naphthalene	0.5	0.5	0.5	0.5	0.5
D_{10}-Acenaphthene	0.5	0.5	0.5	0.5	0.5
D_{10}-Phenanthrene	0.5	0.5	0.5	0.5	0.5
D_{12}-Chrysene	0.5	0.5	0.5	0.5	0.5
D_{12}-Perylene	0.5	0.5	0.5	0.5	0.5
SUGGESTED SURROGATE COMPOUNDS					
D_{10}-Fluoranthene (field)	0.10	0.25	0.50	1.25	2.50
D_{12}-Benzo[a]pyrene (field)	0.10	0.25	0.50	1.25	2.50
D_{10}-Fluorene (lab)	0.10	0.25	0.50	1.25	2.50
D_{10}-Pyrene (lab)	0.10	0.25	0.50	1.25	2.50

TABLE 5. CHARACTERISTIC IONS FOR SURROGATE SUGGESTED STANDARDS

Classification	Primary Ion	Secondary Ion
Internal Standards		
D_8-Naphthalene	136	68,137
D_{10}-Acenaphthene	164	162,165
D_{10}-Phenanthrene	188	94,189
D_{12}-Chrysene	240	120,241
D_{12}-Perylene	264	260,265
Laboratory Surrogates		
D_{10}-Fluorene	176	88,177
D_{10}-Pyrene	212	106,213
Field Surrogates		
D_{10}-Fluoranthene	212	106,213
D_{12}-Benzo(a)pyrene	264	132,265

TABLE 6. EXAMPLE OF CHARACTERISTIC IONS FOR COMMON PAHs

Analyte	Primary Ion	Secondary Ion(s)
Pyrene	202	101,203
Benz(a)anthracene	228	229,226
Chrysene	228	226,229
Benzo(a)pyrene	252	253,126
Benzo(b)fluoranthene	252	253,126
Benzo(k)fluoranthene	252	253,126
Benzo(g,h,i)perylene	276	138,277
Dibenz(a,h)anthracene	278	139,279
Anthracene	178	179,176
Phenanthrene	178	179,176
Acenaphthene	154	153,152
Acenaphthylene	152	151,153
Benzo(e)pyrene	252	253,126
Fluoranthene	202	101,203
Fluorene	166	165,167
Ideno(1,2,3-cd)pyrene	276	138,227
Naphthalene	128	129,127
Perylene	252	253,126
Coronene	300	150,301

TABLE 7. EXAMPLE OF RELATIVE RESPONSE FACTOR CRITERIA FOR INITIAL AND CONTINUING CALIBRATION OF COMMON SEMI-VOLATILE COMPOUNDS

Semi-volatile Compounds	Minimum RRF	Maximum %RSD	Maximum %Difference
Naphthalene	0.700	30	30
Acenaphthylene	1.300	30	30
Acenaphthene	0.800	30	30
Fluorene	0.900	30	30
Phenanthrene	0.700	30	30
Anthracene	0.700	30	30
Fluoranthene	0.600	30	30
Pyrene	0.600	30	30
Benz(a)anthracene	0.800	30	30
Chrysene	0.700	30	30
Benzo(b)fluoranthene	0.700	30	30
Benzo(k)fluoranthene	0.700	30	30
Benzo(a)pyrene	0.700	30	30
Indeno(1,2,3-cd)pyrene	0.500	30	30
Dibenz(a,h)anthracene	0.400	30	30
Benzo(g,h,i)perylene	0.500	30	30
Perylene	0.500	30	30
Coronene	0.700	30	30

TABLE 8. MINIMUM SAMPLING EQUIPMENT CALIBRATION AND ACCURACY REQUIREMENTS

Equipment	Acceptance limits	Frequency and method of measurement	Action if requirements are not met
Sampler	Indicated flow rate = true flow rate, ±10%.	Calibrate with certified transfer standard on receipt, after maintenance on sampler, and any time audits or flow checks deviate more than ±10% from the indicated flow rate or ±10% from the design flow rate.	Recalibrate
Associated equipment			
Sampler on/off timer	±30 min/24 hour	Check at purchase and routinely on sample-recovery days	Adjust or replace
Elapsed-time meter	±30 min/24 hour	Compare with a standard time-piece of known accuracy at receipt and at 6-month intervals	Adjust or replace
Flowrate transfer standard (orifice device)	Check at receipt for visual damage	Recalibrate annually against positive displacement standard volume meter	Adopt new calibration curve

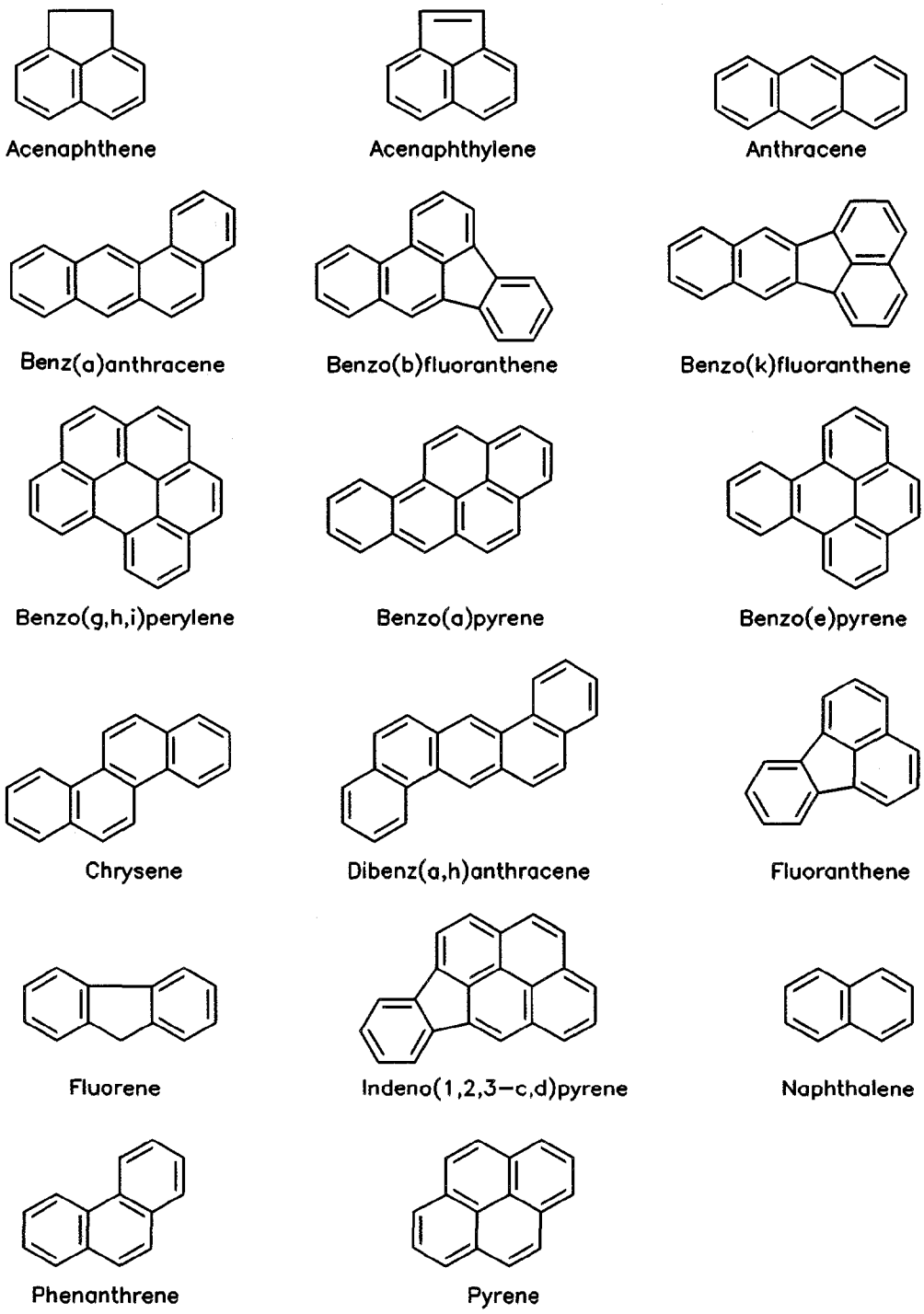

Figure 1. Ring structure of common PAHs.

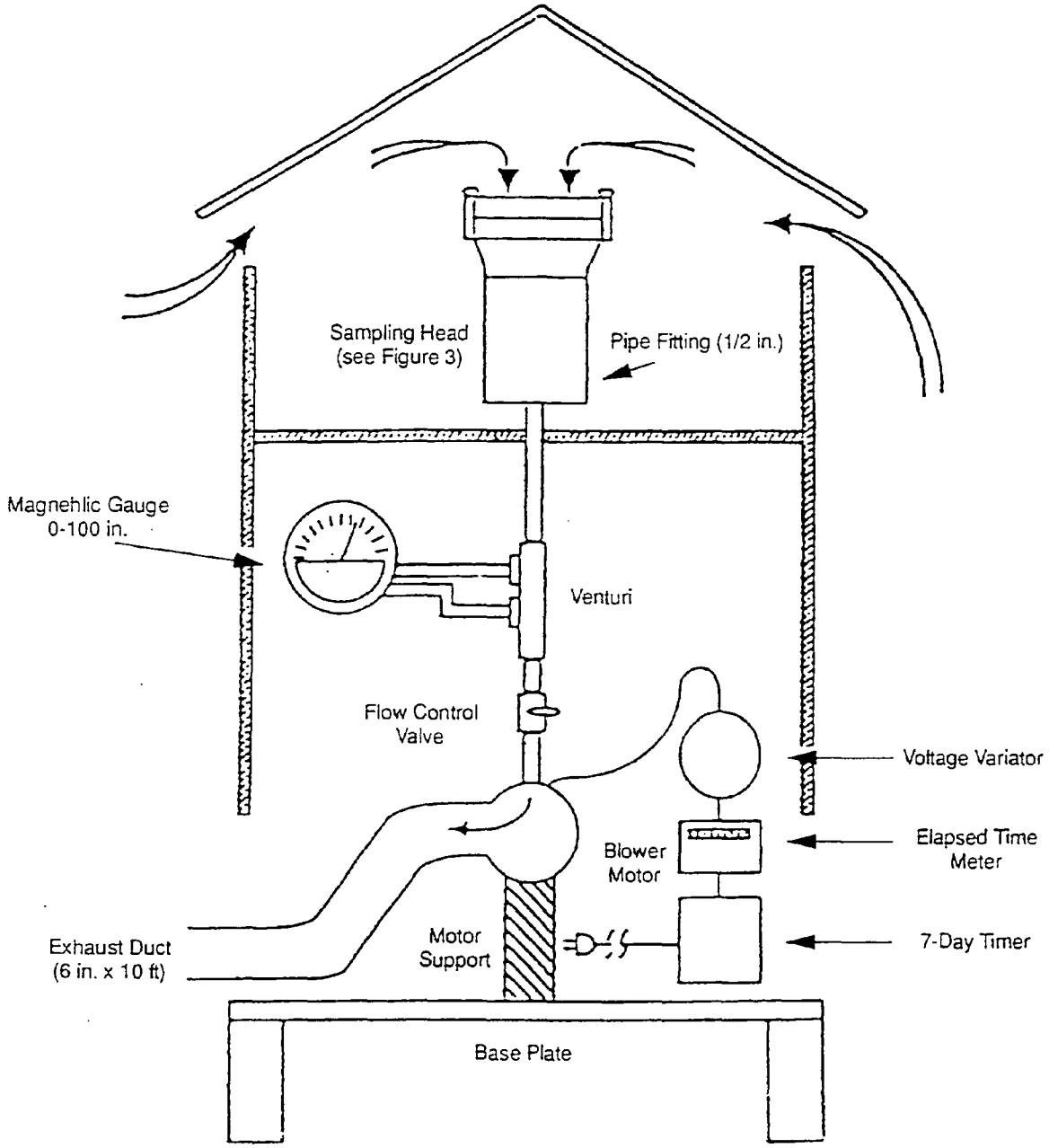

Figure 2. Typical high volume air sampler for PAHs.

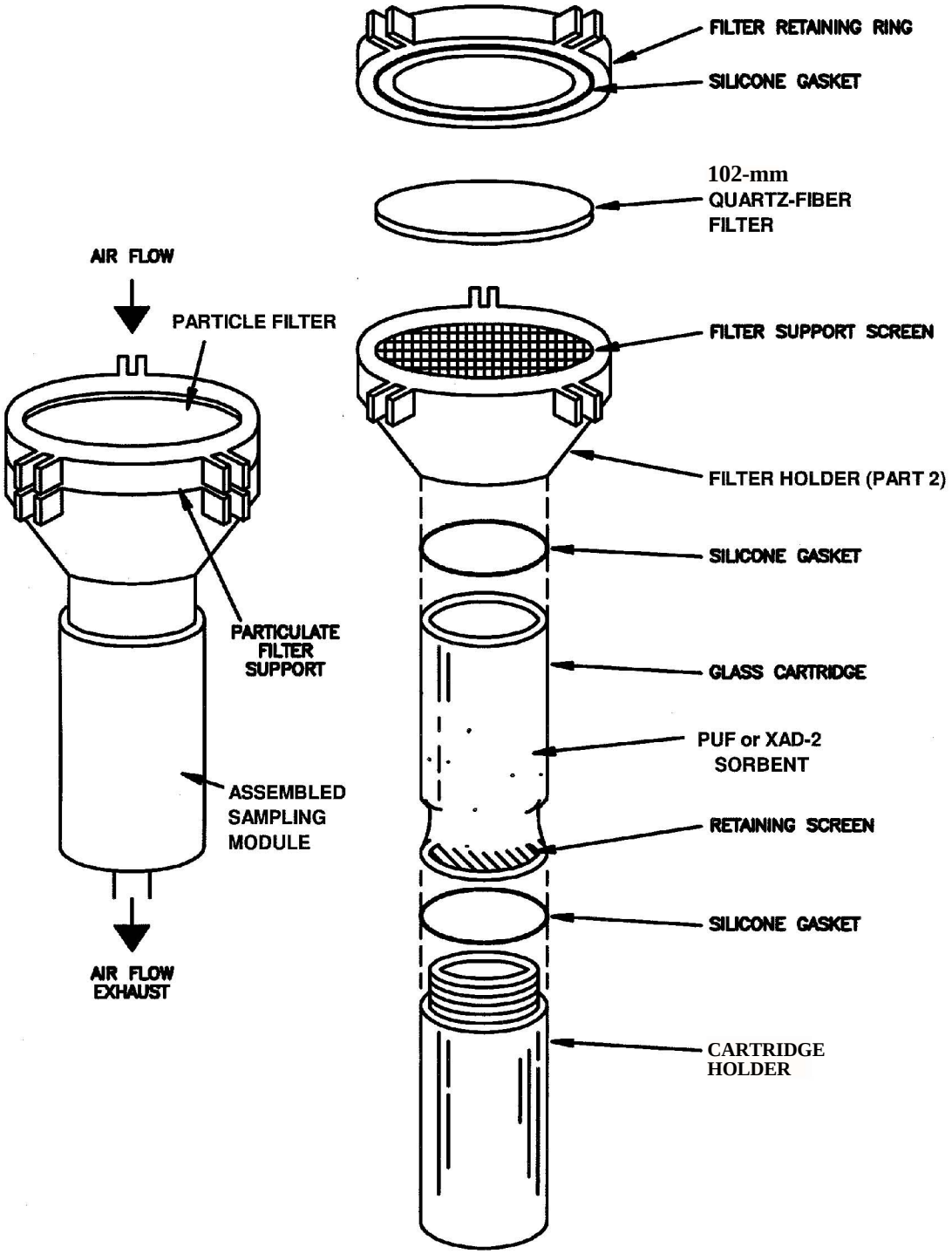

Figure 3. Typical absorbent cartridge assembly for sampling PAHs.

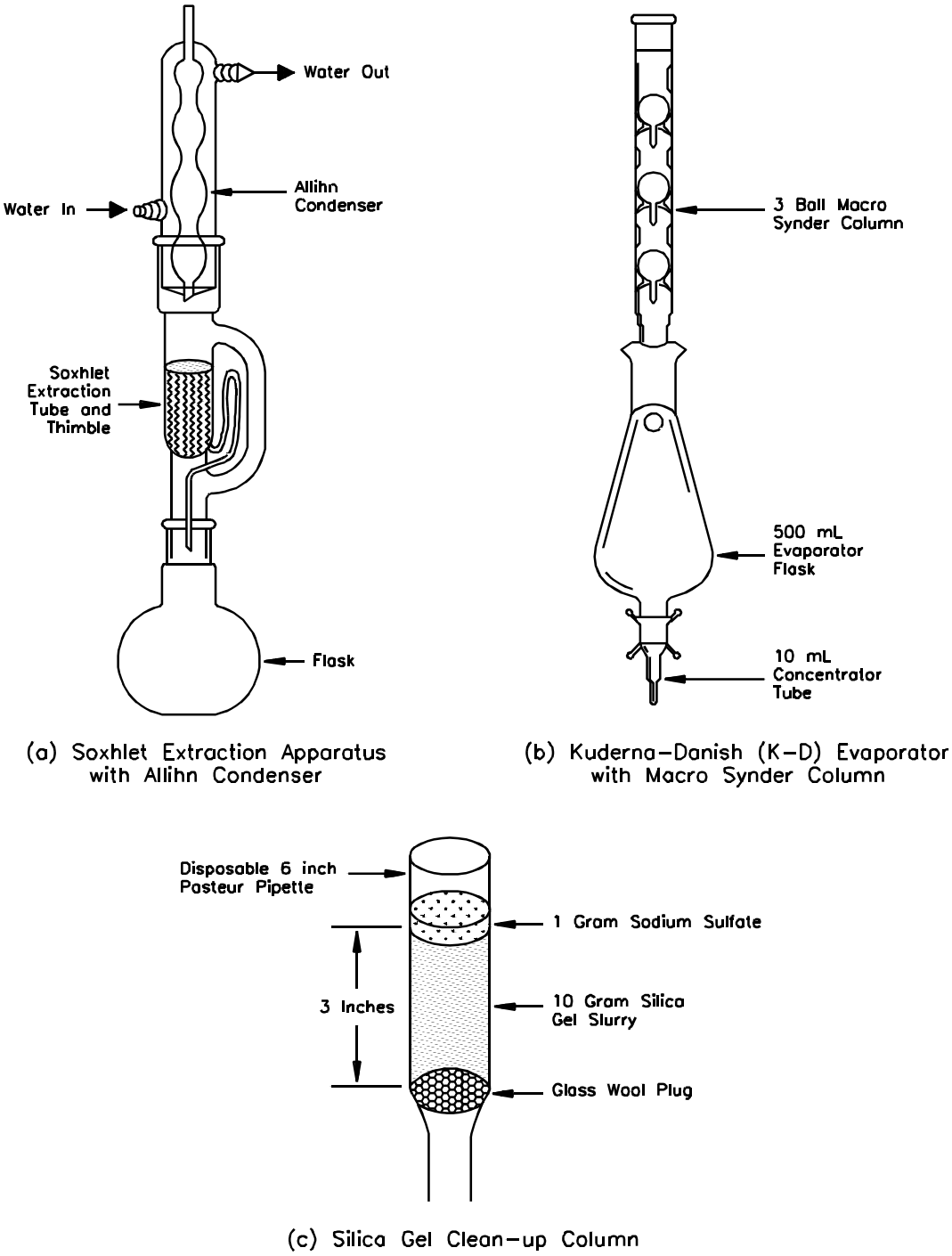

Figure 4. Apparatus used for sample clean-up and extraction.

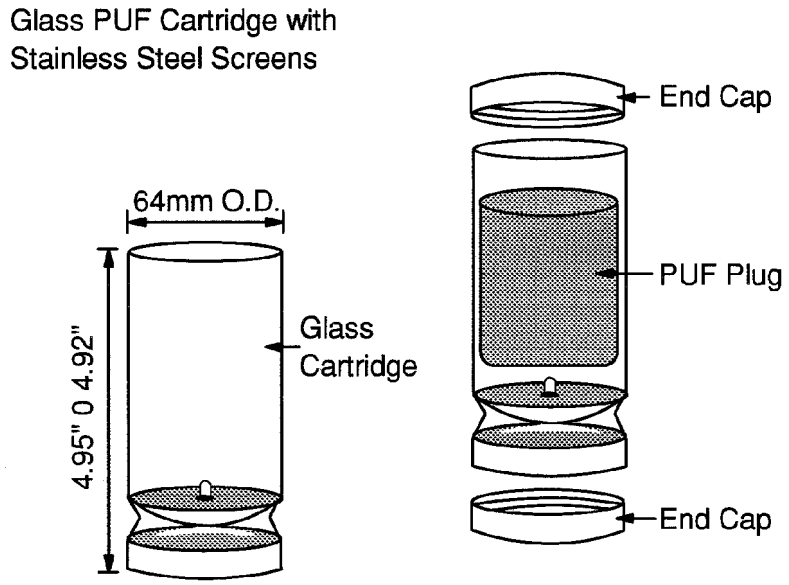

5a. Glass PUF cartridge, plug, and end caps.

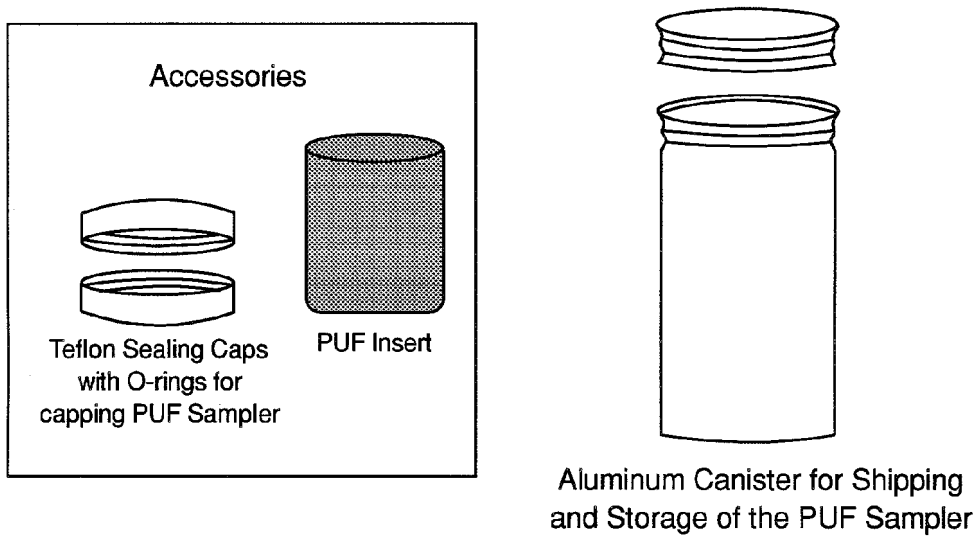

5b. PUF shipping container.

Figure 5. Glass PUF cartridge (5a) and shipping container (5b) for use with Compendium Method TO-13A.

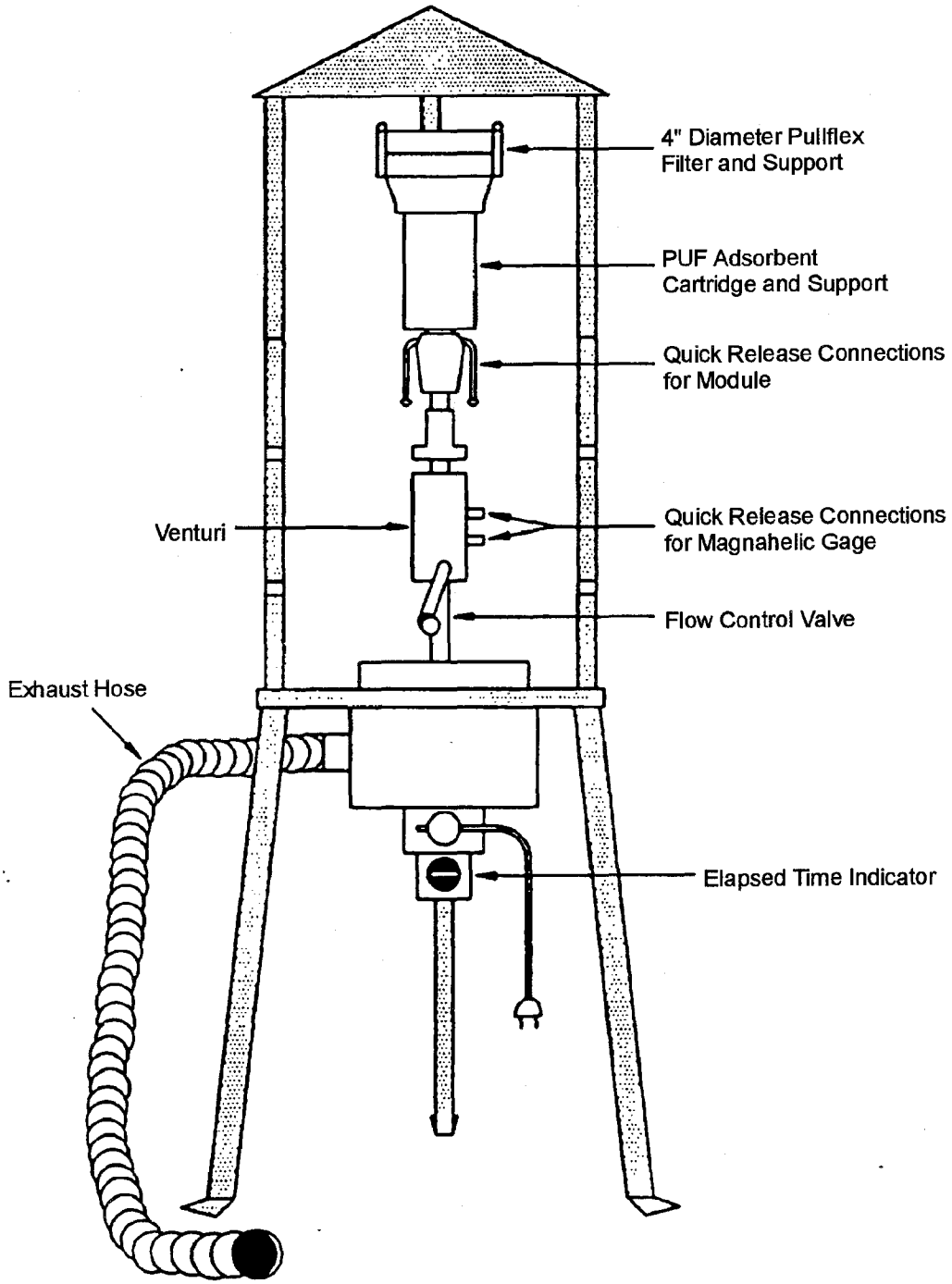

Figure 6. Example of a field portable high volume air sampler for sampling PAHs developed by EPA.

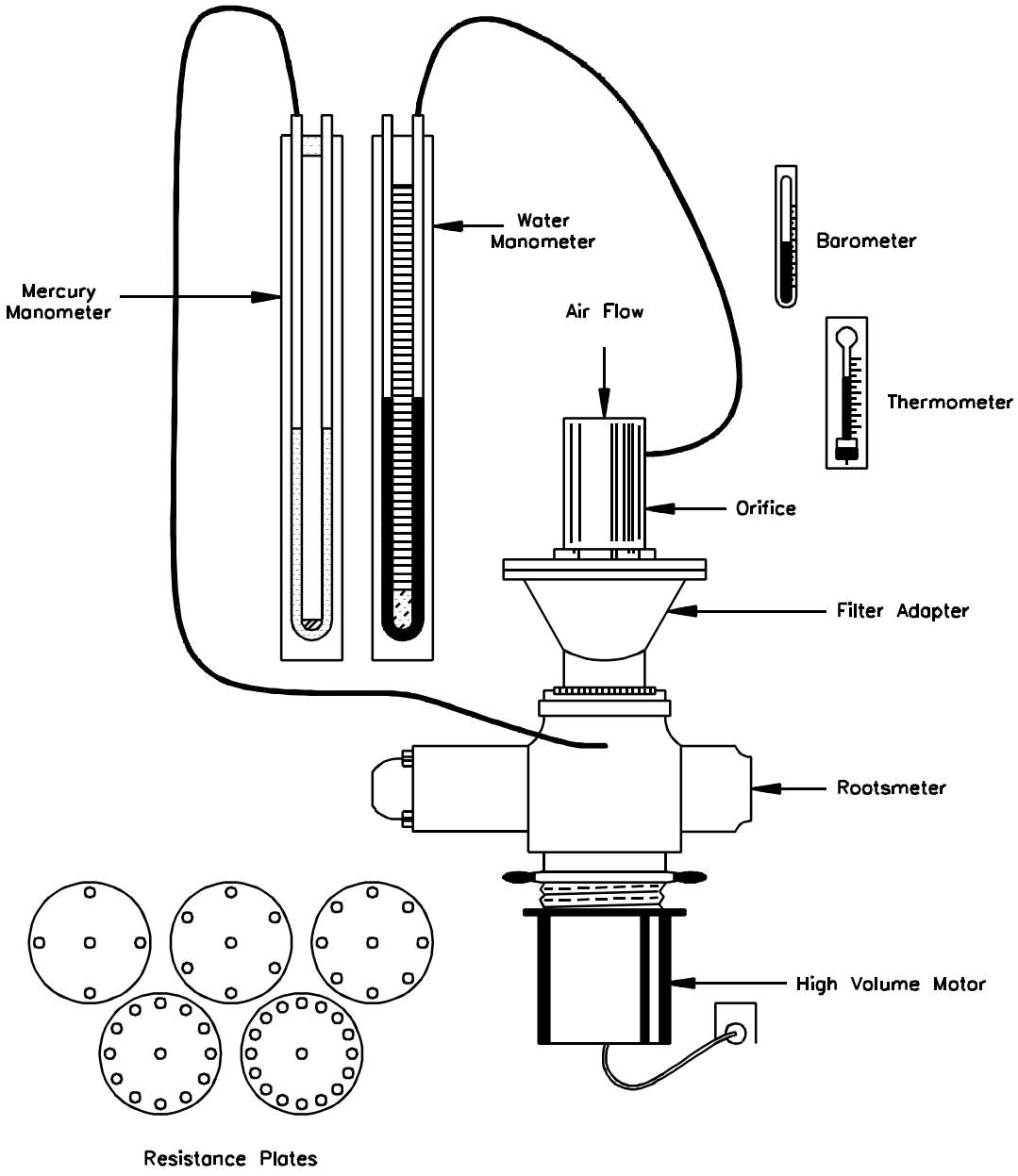

Figure 7. Positive displacement rootsmeter used to calibrate orifice transfer standard used in Compendium Method TO-13A.

COMPENDIUM METHOD TO-13A
ORIFICE CALIBRATION DATA SHEET

T_1 _____ Name _____

P_1 _____ mmHg Date _____

Orifice No. _____

Rootsmeter No. _____

Resistance Plants (No. of holes)	Air Volume Measured by Rootsmeter V_m		Standard Volume, V_{std}, (std m^3)	Time for Air Volume to Pass Through Rootsmeter, θ (min)	Rootsmeter Pressure Differential, ΔP (mm Hg)	Pressure Drop Across Orifice, ΔH (in. H_2O)	x-Axis Standard Flowrate, Q_{std} (std m^3/min)	
	(R^3)	(m^3)						
5	200	5.66						
7	200	5.66						
10	300	8.50						
13	300	8.50						
18	300	8.50						

Factors: $(R^3)(0.02832\ \frac{m^3}{R^3}) = m^3$ and (in. Hg) $25.4\ (\frac{mm\ Hg}{in.\ Hg}) = mm\ Hg$

Calculation Equations:

1. $$V_{std} = V_m \left(\frac{P_1 - \Delta P}{P_{std}}\right)\left(\frac{T_{std}}{T_1}\right)$$

where:

$T_{std} = 296°K$

$P_{std} = 760.0$ mm Hg

2. $$Q_{std} = \frac{V_{std}}{\theta}$$

Figure 8. Example of a high-volume orifice calibration data sheet for Compendium Method TO-13A.

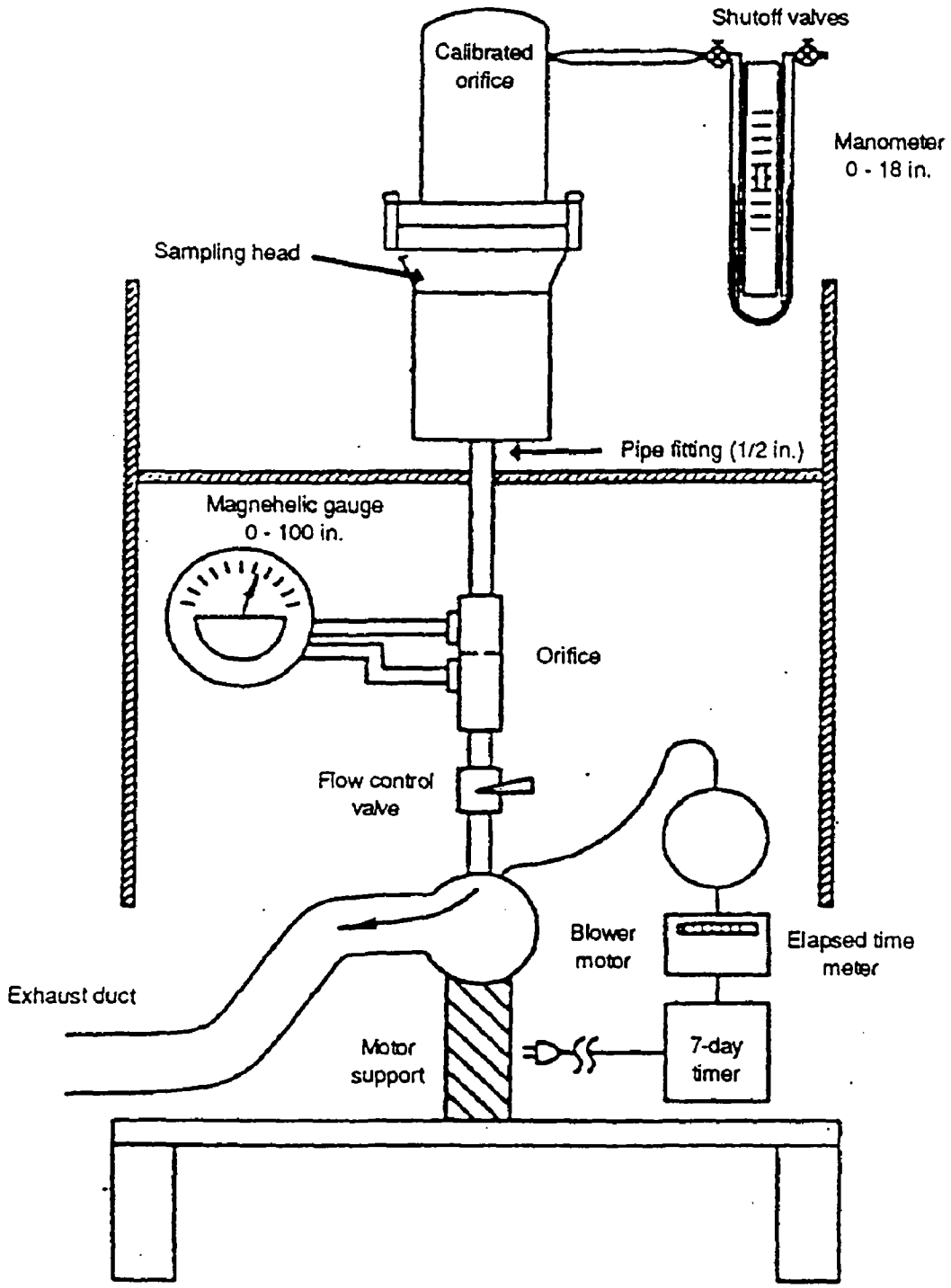

Figure 9. Typical field calibration configuration for Compendium Method TO-13A sampler.

FIELD CALIBRATION DATA SHEET FOR COMPENDIUM METHOD TO-13A PAH
SAMPLER CALIBRATION

Sampler ID: _____

Sampler Location: _____

Calibration Orifice ID: _____

Job No.: _____

High Volume Transfer Orifice Data:

Correlation Coefficient (CC1): _____ Slope (M1): _____

(CC2): _____ (M2): _____

Intercept (B1): _____

(B2): _____

Calibration Date: ___ Time: _____

Calibration Ambient Temperature: ___°F ___°C CALIBRATOR'S SIGNATURE

Calibration Ambient Barometric Pressure: ___ "Hg ___ mm Hg _____

Calibration set point (SP): _____

SAMPLER CALIBRATION

Actual values from calibration		Calibrated values		
Orifice manometer, inches (Y1)	Monitor magnehelic, inches (Y2)	Orifice manometer (Y3)	Monitor magnehelic (Y4)	Calculated value orifice flow, scm (X1)
	70			
	60			
	50			
	40			
	30			
	20			
	10			

Definitions

Y1 = Calibration orifice reading, in. H_2O

Y2 = Monitor magnehelic reading, in. H_2O

P_a = Barometric pressure actual, mm Hg

B1 = Manufacturer's Calibration orifice Intercept

M1 = Manufacturer's Calibration orifice manometer slope

Y3 = Calculated value for orifice manometer

= $\{Y1(Pa/760)[298/(Ta + 273)]\}^{½}$

Y4 = Calculated value for magnehelic

= $\{Y2(Pa/760)[298/(Ta + 273)]\}^{½}$

X1 = Calculated value orifice flow, scm

= (Y3 - B1)/M1

P_{std} = Barometric pressure standard, 760 mm Hg

T_a = Temperature actual, °C

T_{std} = Temperature standard, 25°C

Figure 10. Typical orifice transfer field calibration data sheet for Compendium Method TO-13A.

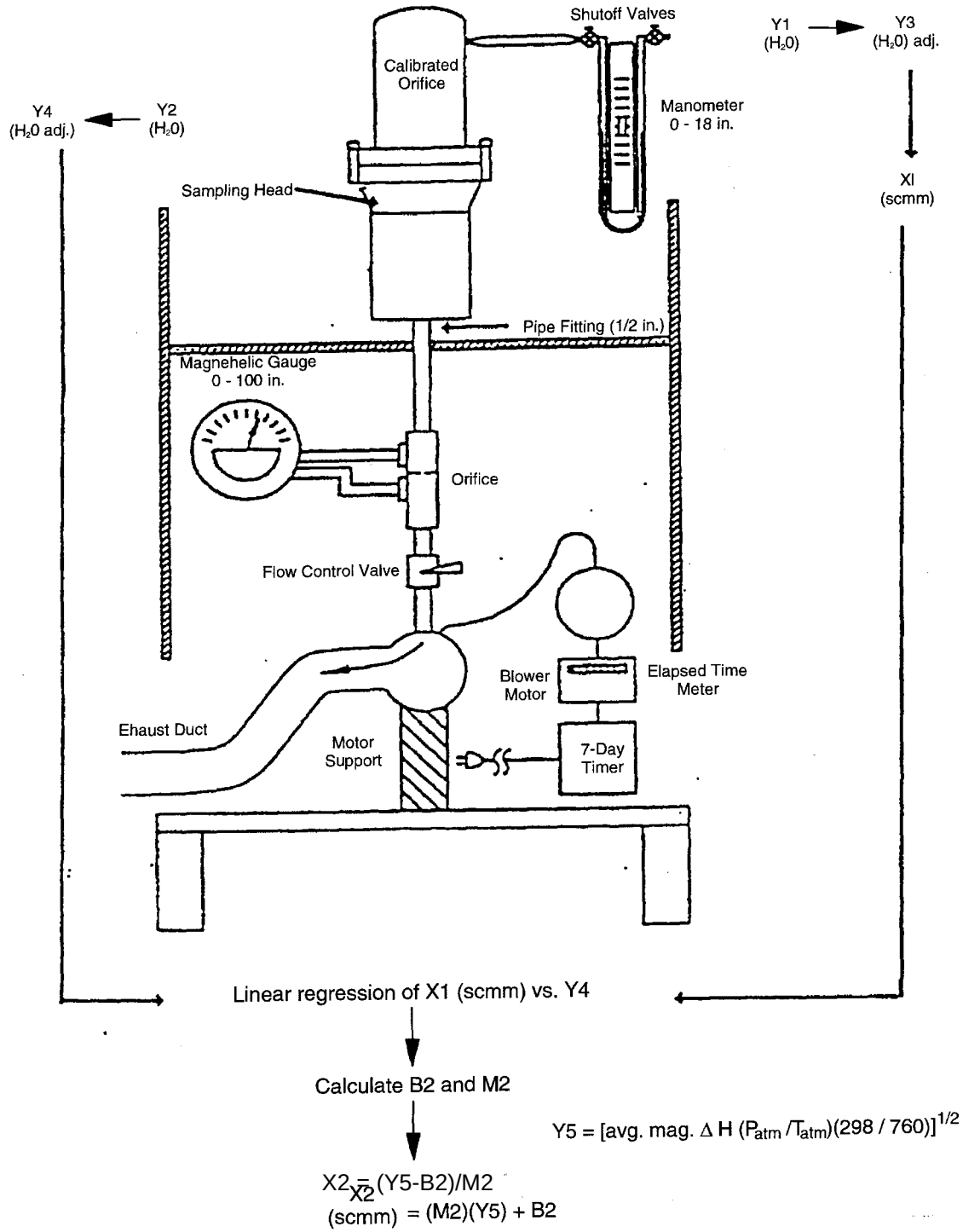

Figure 11. Example of relationship between orifice transfer standard and flow rate through Compendium Method TO-13A sampler.

COMPENDIUM METHOD TO-13A
FIELD TEST DATA SHEET
GENERAL INFORMATION

Sampler I.D. No.: _____
Lab PUF Sample No.: _____
Sample location: _____
_____
_____

Operator: _____
Other: _____
_____
_____

PUF Cartridge Certification Date: _____
Date/Time PUF Cartridge Installed: _____
Elapsed Timer: _____
Start _____
Stop _____
Diff. _____

Sampling

M1 _____ **B1** _____
M2 _____ **B2** _____

	Start	Stop
Barometric pressure ("Hg)	_____	_____
Ambient Temperature (°F)	_____	_____
Rain	**Yes** _____ **No** _____	**Yes** _____ **No** _____

Sampling time
Start _____
Stop _____
Diff. _____

Audit flow check within ±10 of set point
_____ **Yes**
_____ **No**

TIME	TEMP	BAROMETRIC PRESSURE	MAGNEHELIC READING	CALCULATED FLOW RATE (std. m^3)	READ BY
Avg.					

Comments

_____
_____
_____

Figure 12. Example of typical Compendium Method TO-13A field test data sheet (FTDS).

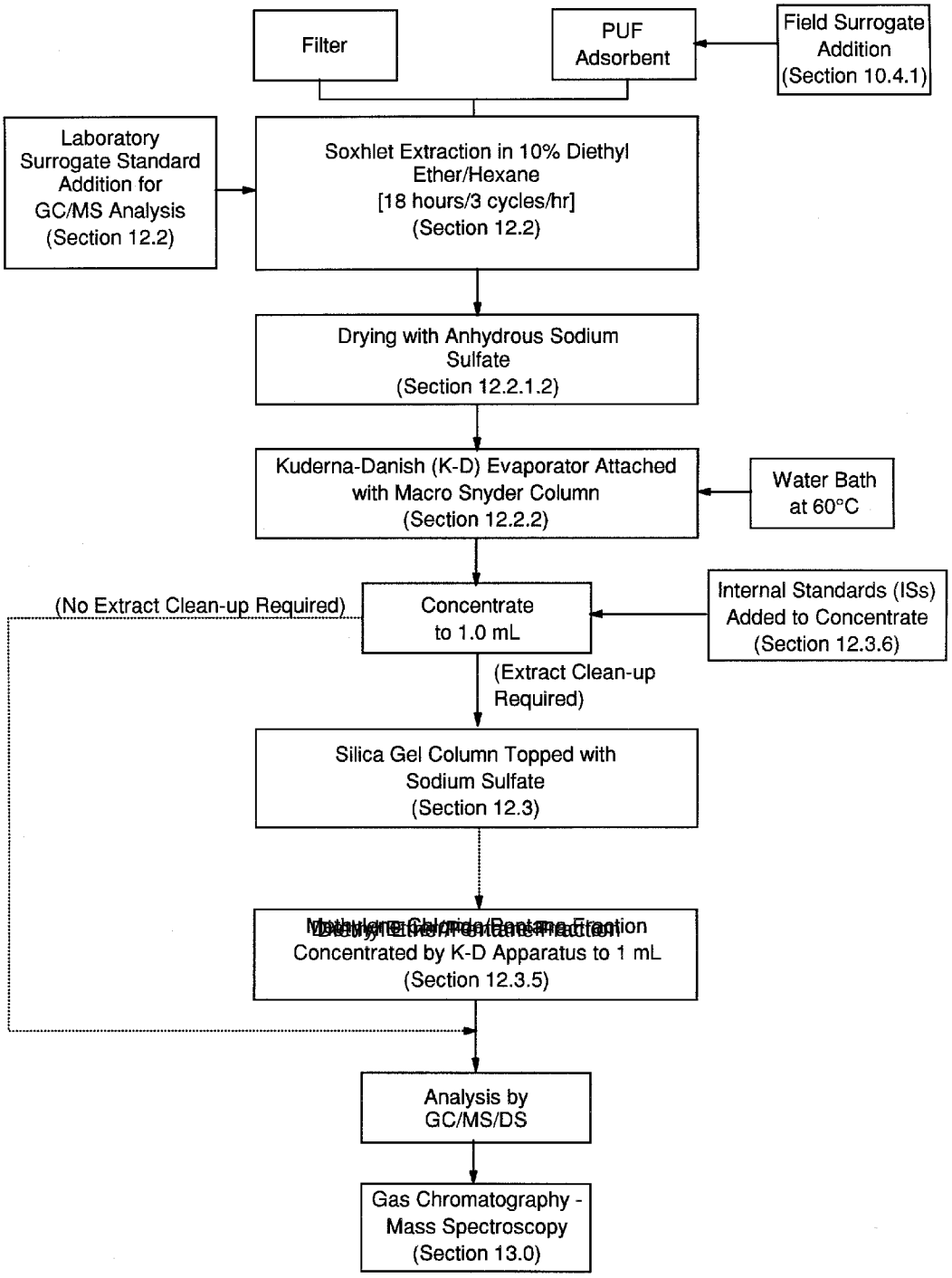

Figure 13. Sample clean-up, concentration, separation and analysis sequence for common PAHs.
[Note: XAD-2 sequence is similar to PUF except methylene chloride is the solvent.]

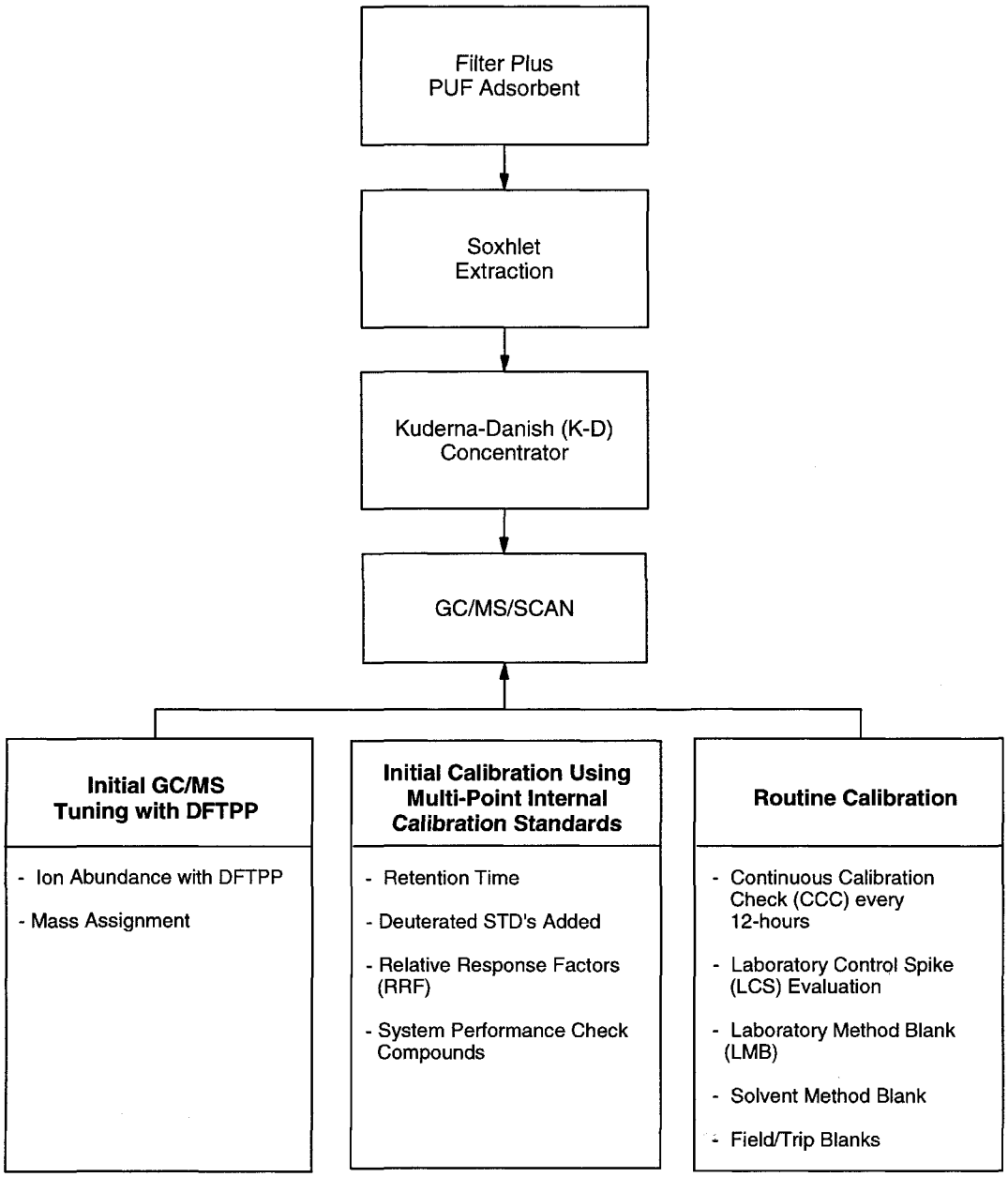

Figure 14. Typical quality assurance specifications for GC/MS/DS operation.

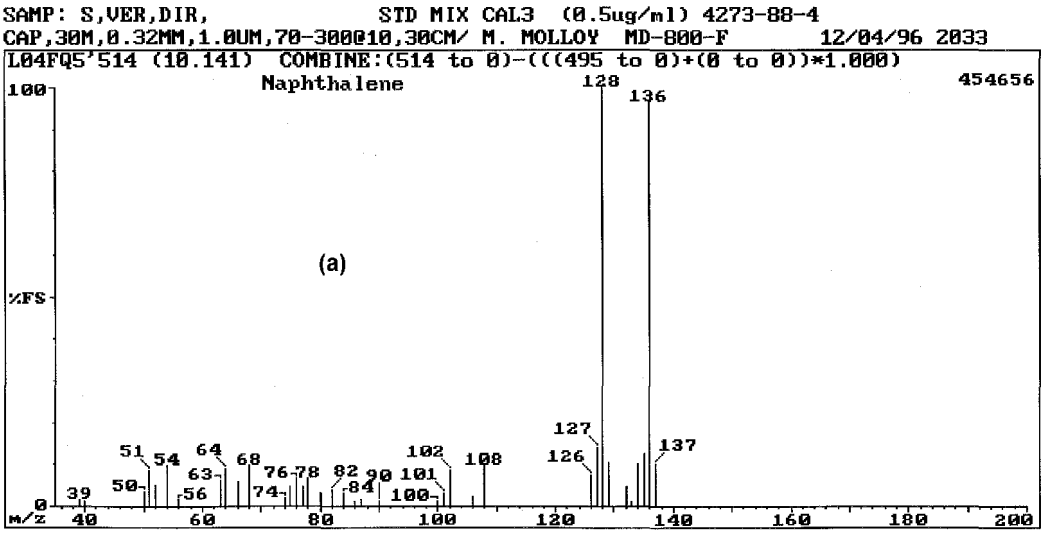

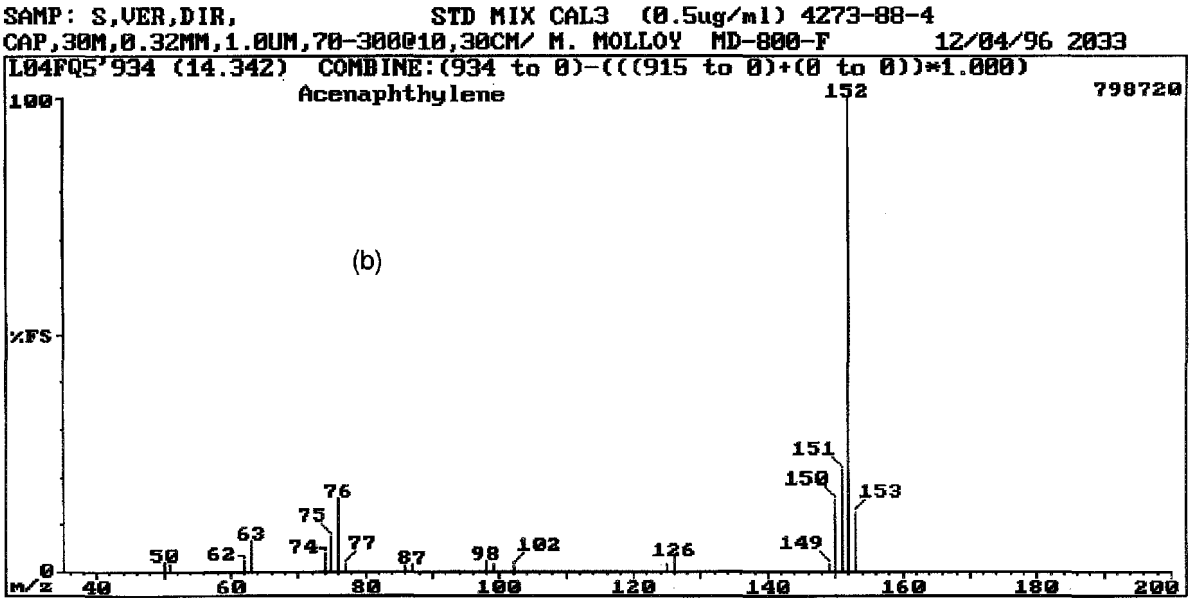

Figure 15. Mass spectra of Compendium Method TO-13A compounds for (a) naphthalene and (b) acenaphthylene.

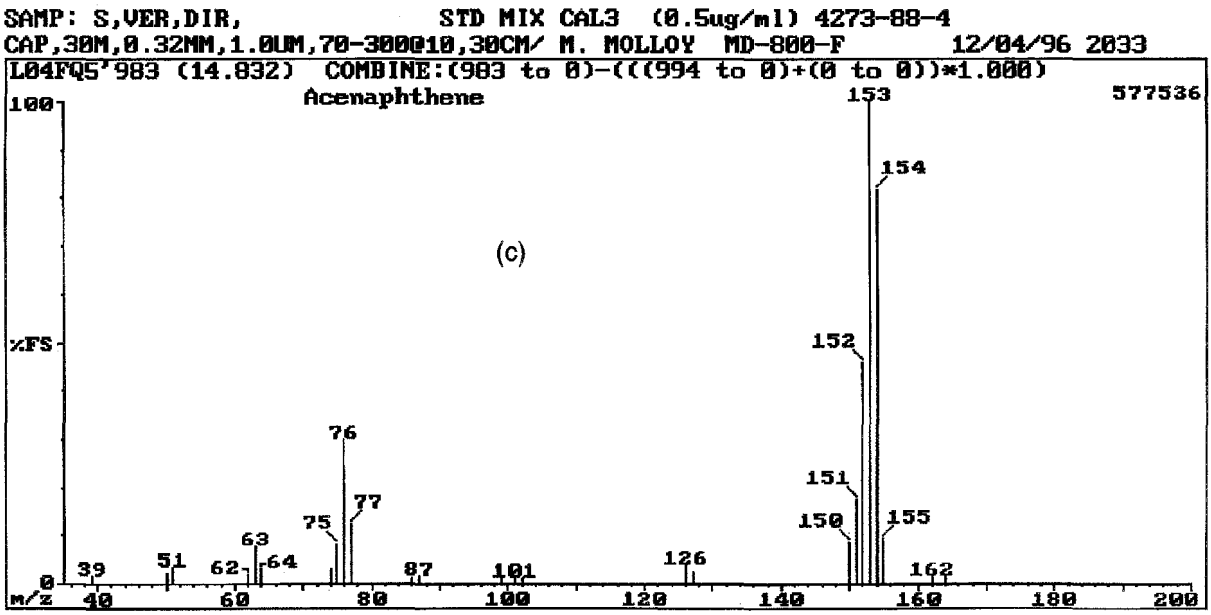

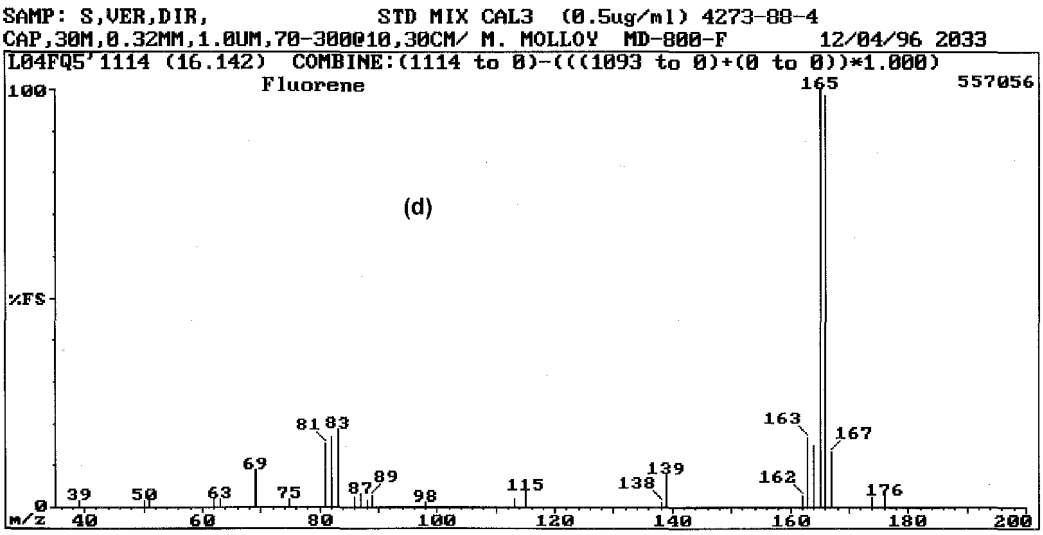

Figure 15 (Cont). Mass spectra of Compendium Method TO-13A compounds for (c) acenaphthene and (d) fluorene.

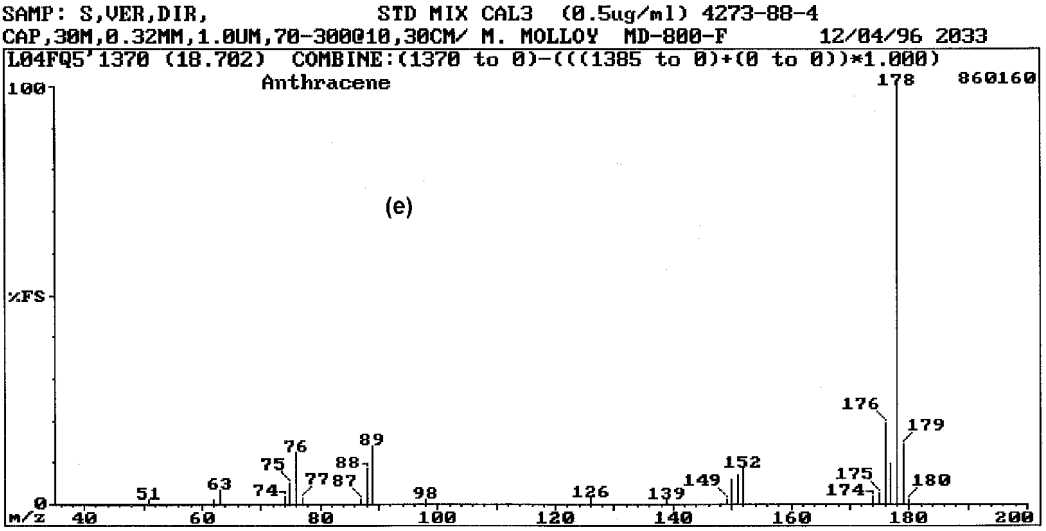

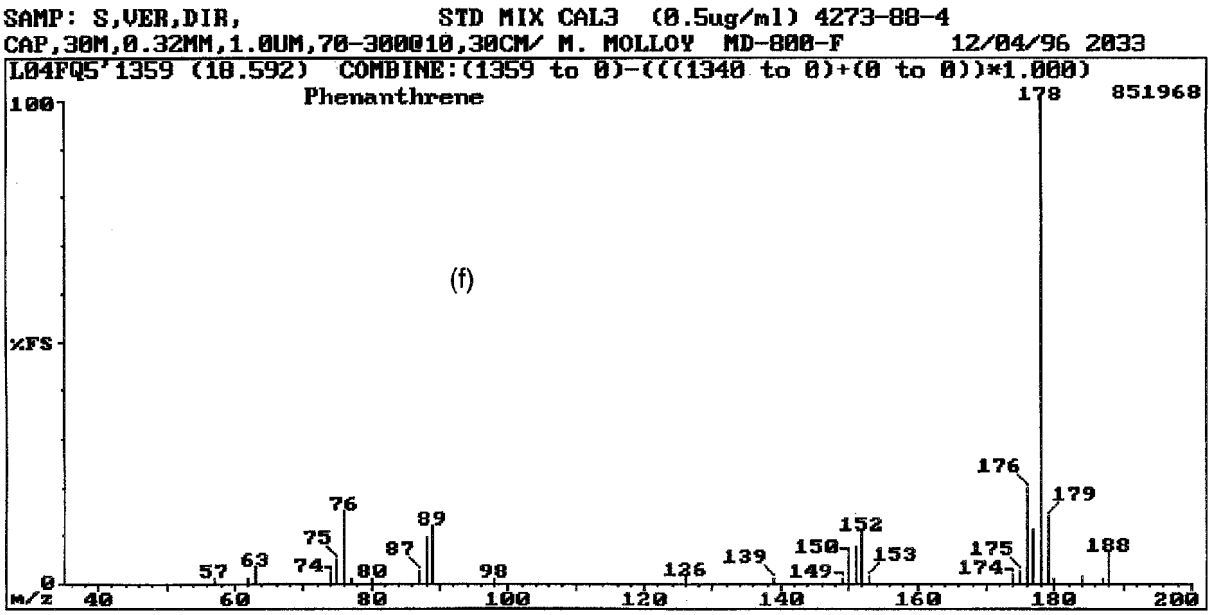

Figure 15 (Cont). Mass spectra of Compendium Method TO-13A compounds for (e) anthracene and (f) phenanthrene.

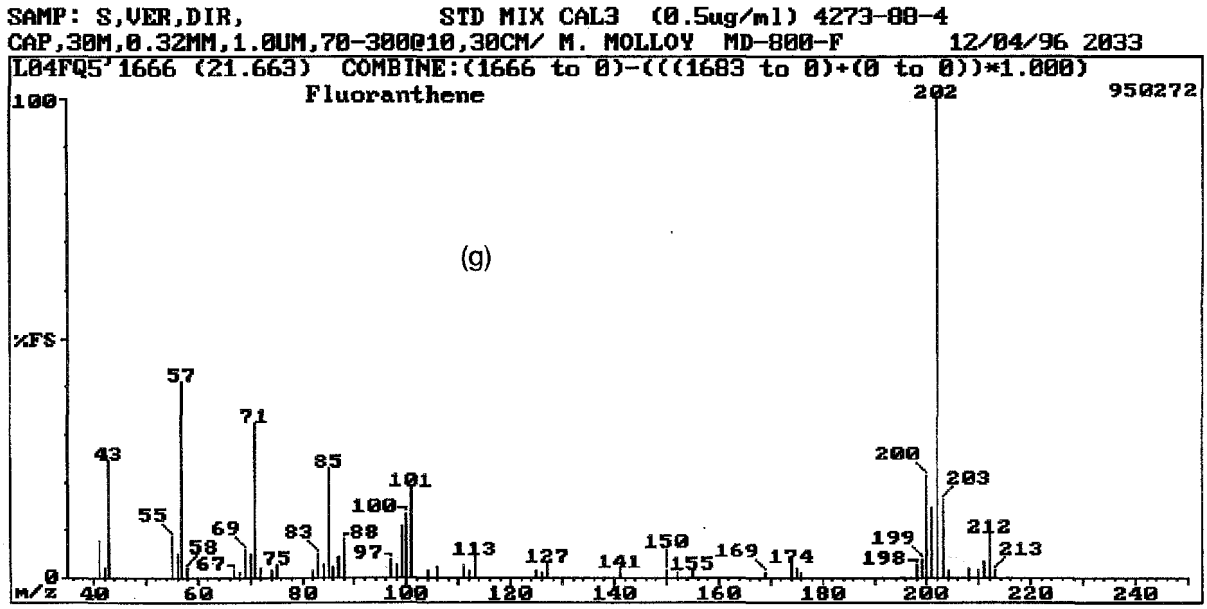

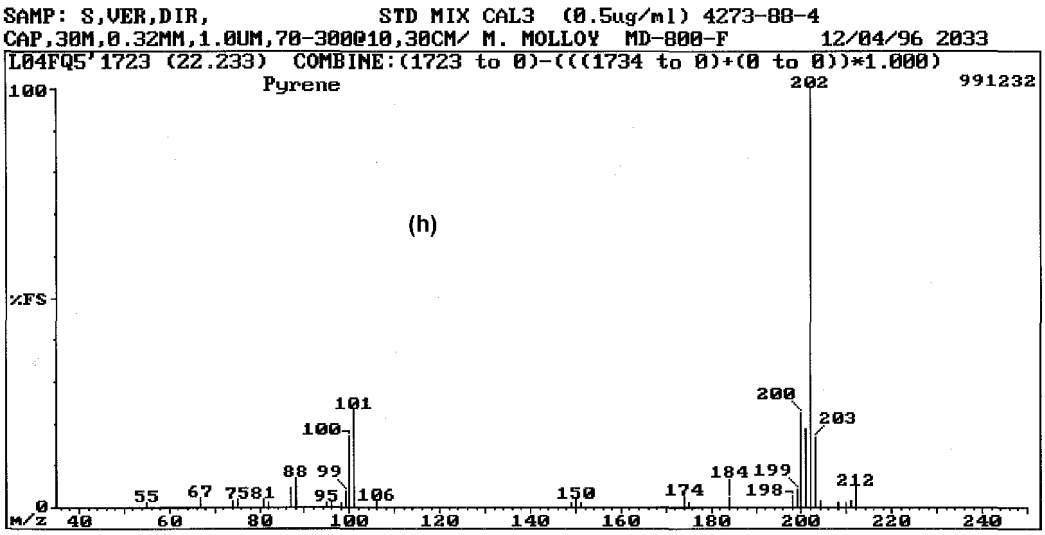

Figure 15 (Cont). Mass spectra of Compendium Method TO-13A compounds for (g) fluoranthene and (h) pyrene.

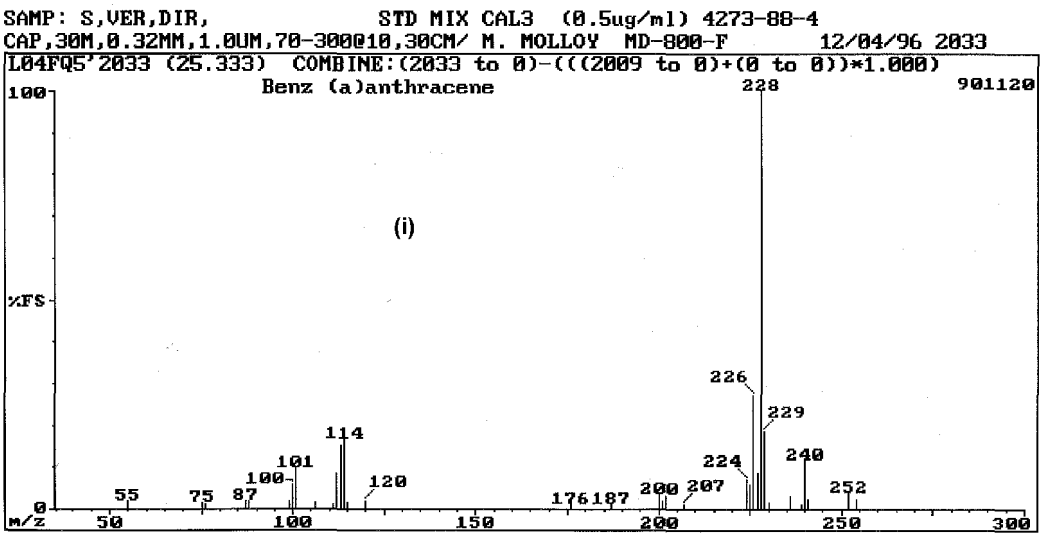

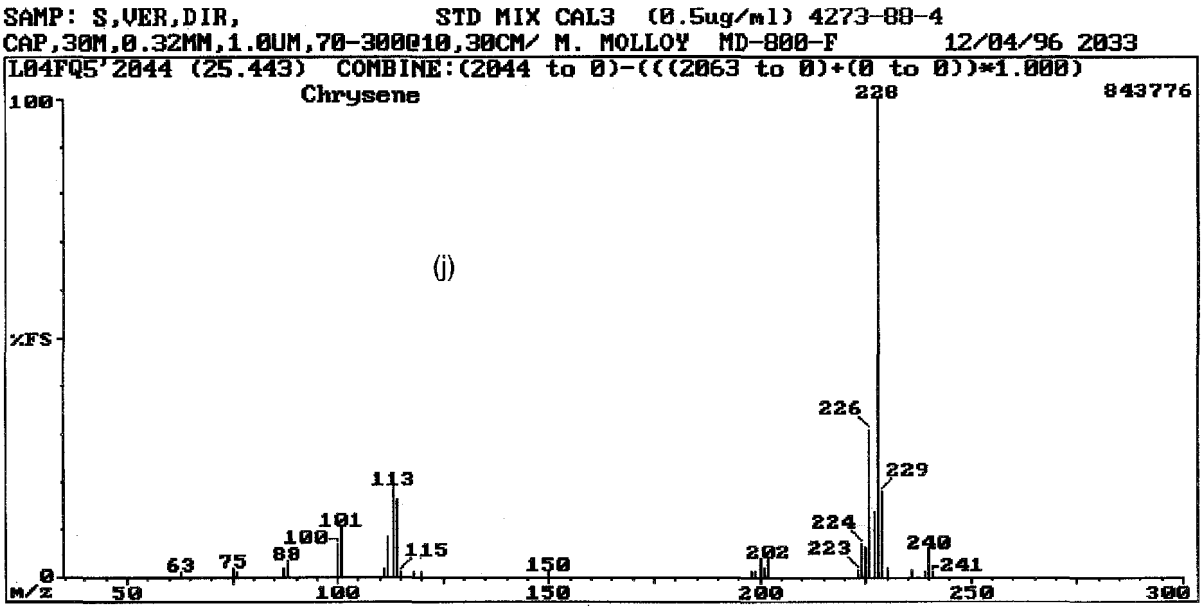

Figure 15 (Cont). Mass spectra of Compendium Method TO-13A compounds for (i) benz(a)anthracene and (j) chrysene.

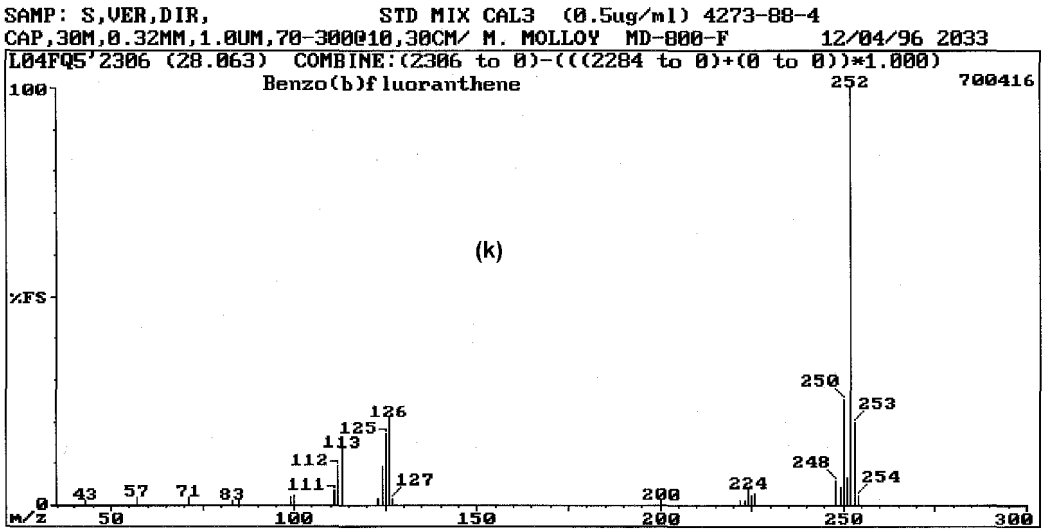

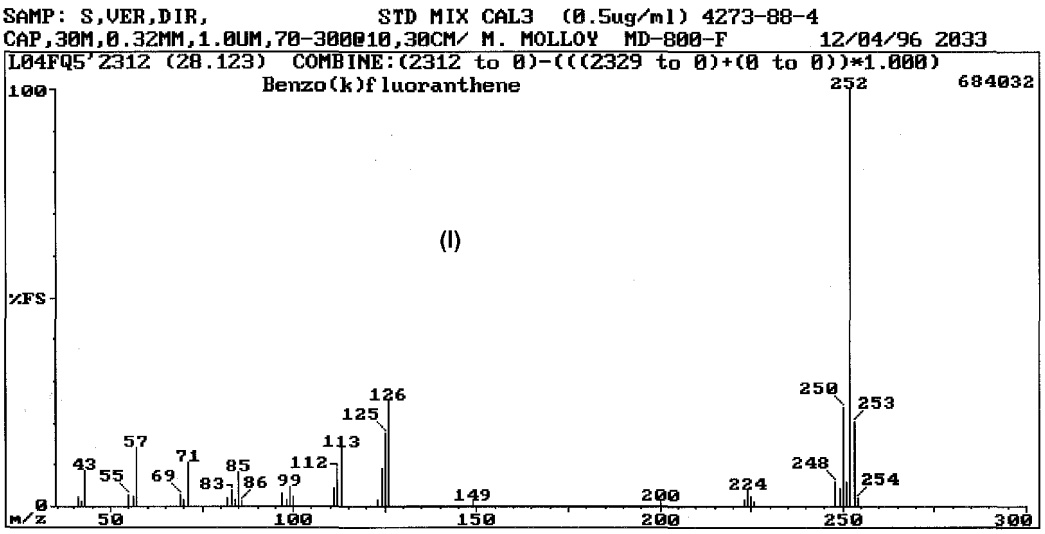

Figure 15 (Cont). Mass spectra of Compendium Method TO-13A compounds for (k) benzo(b)fluoranthene and (l) benzo(k)fluoranthene.

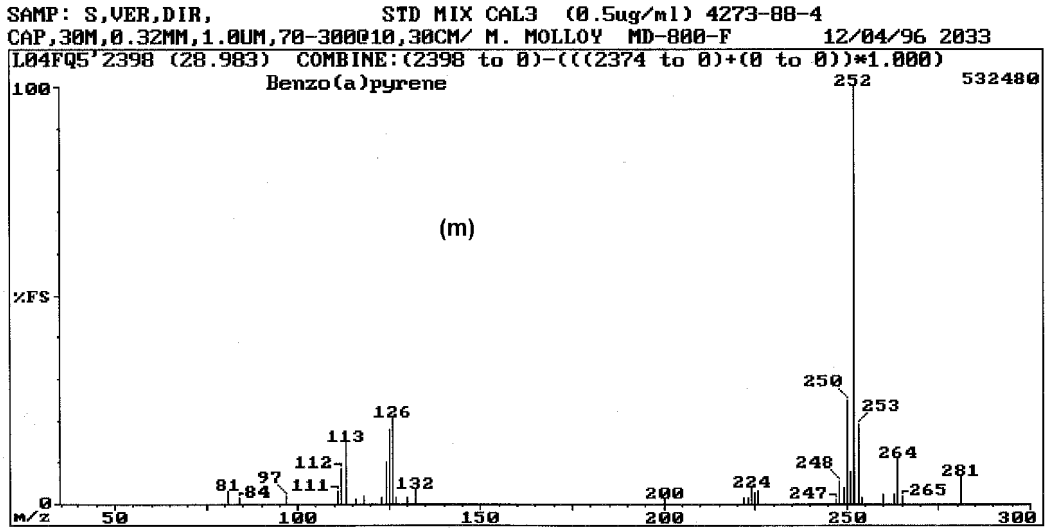

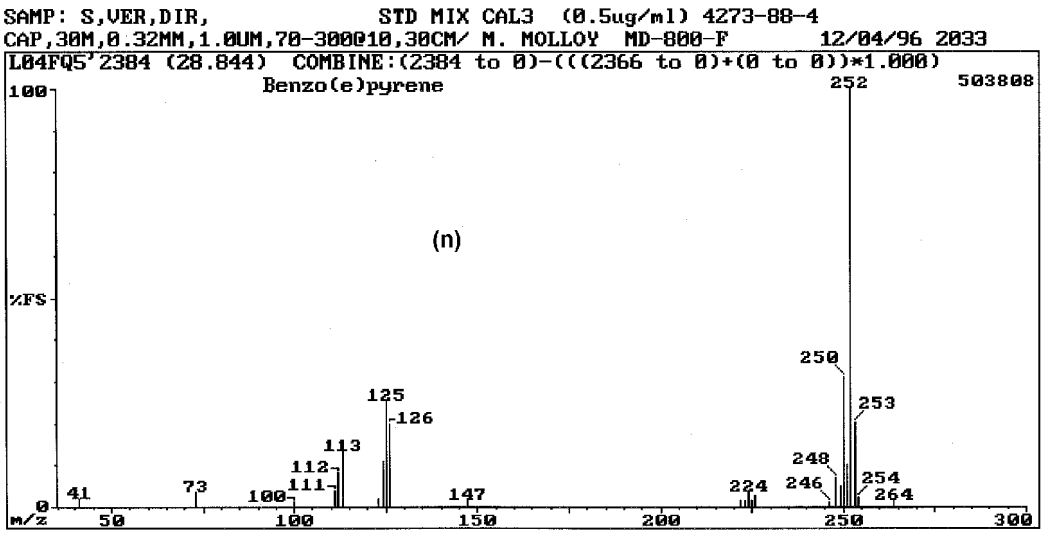

Figure 15 (Cont). Mass spectra of Compendium Method TO-13A compounds for (m) benzo(a)pyrene and (n) benzo(e)pyrene.

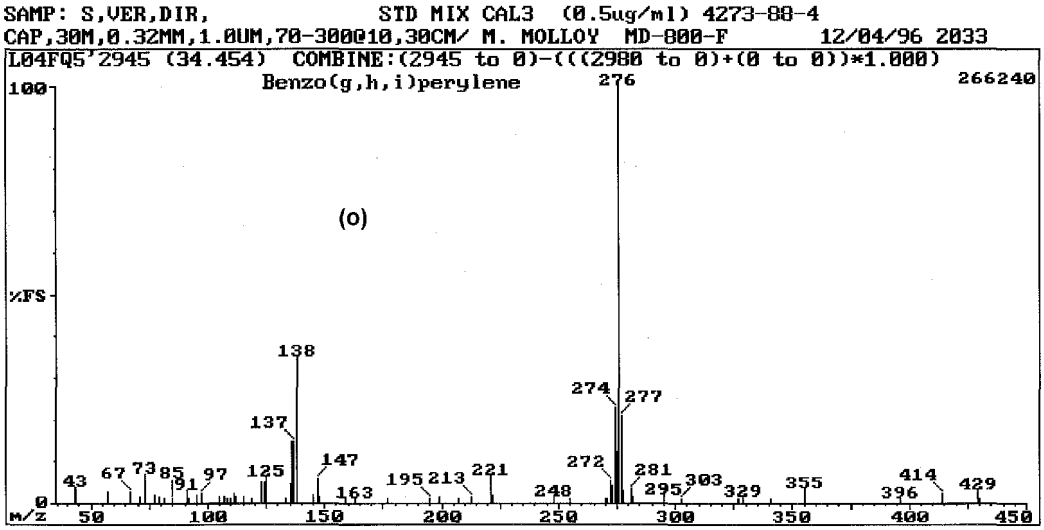

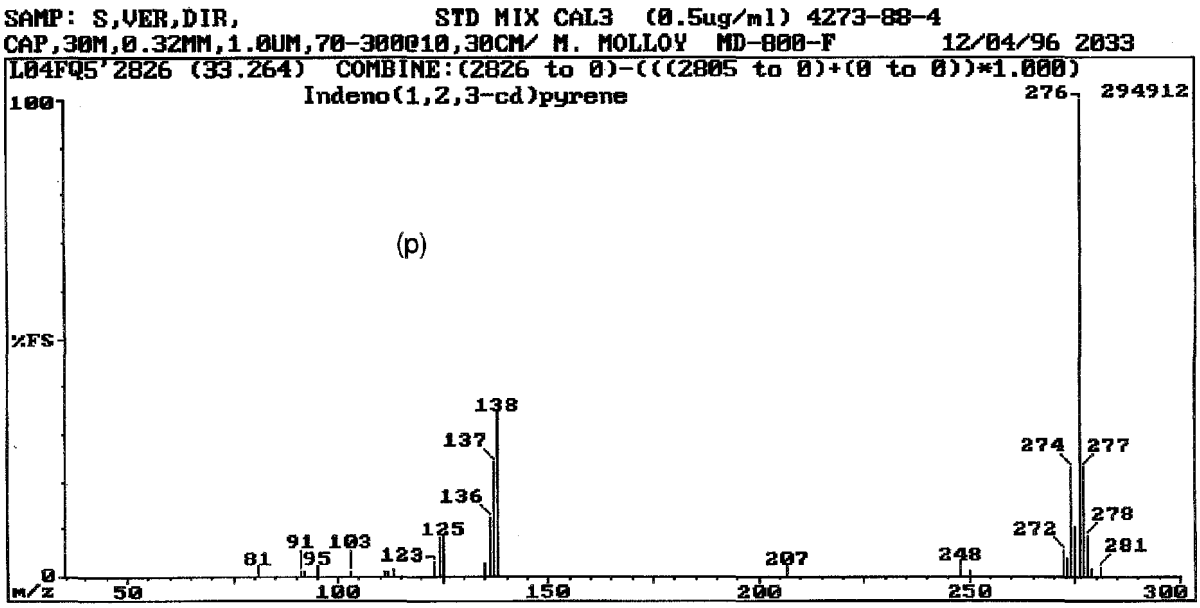

Figure 15 (Cont). Mass spectra of Compendium Method TO-13A compounds for (o) benzo(g,h,i)perylene and (p) indeno(1,2,3-cd)pyrene.

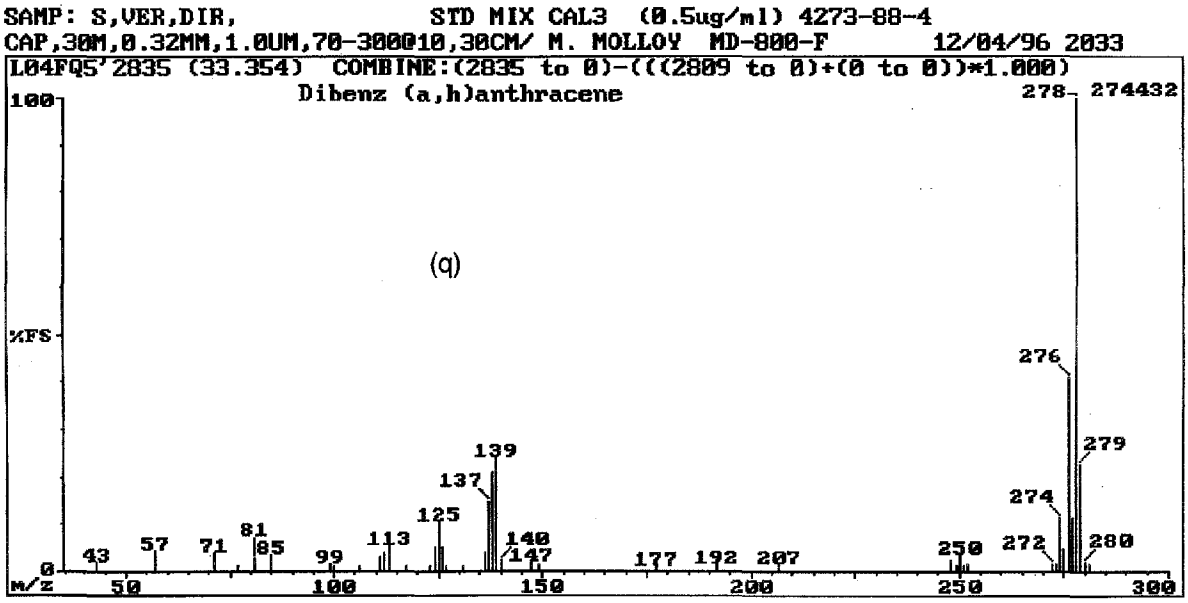

Figure 15 (Cont). Mass spectra of Compendium Method TO-13A compounds for (q) dibenz(a,h)anthracene.

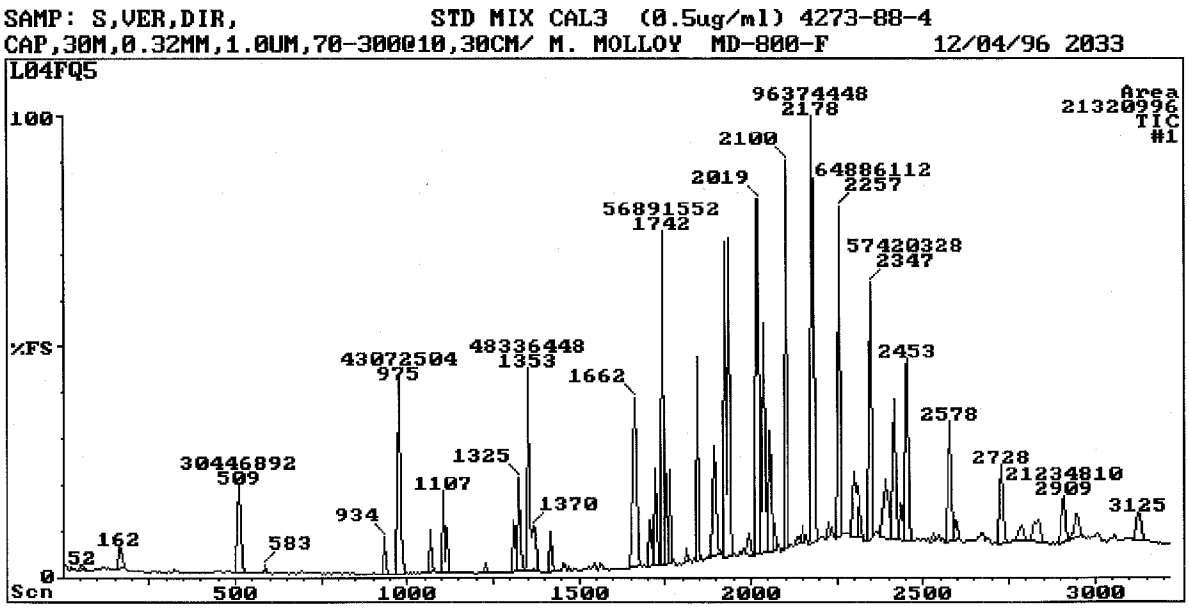

Figure 16. Total ion chromatogram (TIC) of Compendium Method TO-13A target PAHs.

This page intentionally left blank

EPA/625/R-96/010b

Compendium of Methods for the Determination of Toxic Organic Compounds in Ambient Air

Second Edition

Compendium Method TO-14A

Determination Of Volatile Organic Compounds (VOCs) In Ambient Air Using Specially Prepared Canisters With Subsequent Analysis By Gas Chromatography

Center for Environmental Research Information
Office of Research and Development
U.S. Environmental Protection Agency
Cincinnati, OH 45268

January 1999

Method TO-14A
Acknowledgements

This Method was prepared for publication in the *Compendium of Methods for the Determination of Toxic Organic Compounds in Ambient Air, Second Edition,* (EPA/625/R-96/010b), which was prepared under Contract No. 68-C3-0315, WA No. 3-10, by Midwest Research Institute (MRI), as a subcontractor to Eastern Research Group, Inc. (ERG), and under the sponsorship of the U.S. Environmental Protection Agency (EPA). Justice A. Manning, John O. Burckle, and Scott Hedges, Center for Environmental Research Information (CERI), and Frank F. McElroy, National Exposure Research Laboratory (NERL), all in the EPA Office of Research and Development, were responsible for overseeing the preparation of this method. Additional support was provided by other members of the Compendia Workgroup, which include:

- John O. Burckle, U.S. EPA, ORD, Cincinnati, OH
- James L. Cheney, Corps of Engineers, Omaha, NB
- Michael Davis, U.S. EPA, Region 7, KC, KS
- Joseph B. Elkins Jr., U.S. EPA, OAQPS, RTP, NC
- Robert G. Lewis, U.S. EPA, NERL, RTP, NC
- Justice A. Manning, U.S. EPA, ORD, Cincinnati, OH
- William A. McClenny, U.S. EPA, NERL, RTP, NC
- Frank F. McElroy, U.S. EPA, NERL, RTP, NC
- Heidi Schultz, ERG, Lexington, MA
- William T. "Jerry" Winberry, Jr., EnviroTech Solutions, Cary, NC

Method TO-14 was originally published in March of 1989 as one of a series of peer reviewed methods in the second supplement to *"Compendium of Methods for the Determination of Toxic Organic Compounds in Ambient Air,"* EPA 600/4-89-018. Method TO-14 has been revised and updated as Method TO-14A in this Compendium to eliminate time sensitivity material and correct a small number of errors.

Peer Reviewer

- Lauren Drees, U.S. EPA, NRMRL, Cincinnati, OH

Finally, recognition is given to Frances Beyer, Lynn Kaufman, Debbie Bond, Cathy Whitaker, and Kathy Johnson of Midwest Research Institute's Administrative Services staff whose dedication and persistence during the development of this manuscript has enabled it's production.

DISCLAIMER

This Compendium has been subjected to the Agency's peer and administrative review, and it has been approved for publication as an EPA document. Mention of trade names or commercial products does not constitute endorsement or recommendation for use.

METHOD TO-14A

Determination Of Volatile Organic Compounds (VOCs) In Ambient Air Using Specially Prepared Canisters With Subsequent Analysis By Gas Chromatography

TABLE OF CONTENTS

Page

1. Scope 14A-1

2. Summary of Method 14A-1

3. Significance 14A-4

4. Applicable Documents 14A-5
   4.1 ASTM Standards 14A-5
   4.2 EPA Documents 14A-5
   4.3 Other Documents 14A-6

5. Definitions 14A-6

6. Interferences and Limitations 14A-7

7. Apparatus 14A-7
   7.1 Sample Collection 14A-7
   7.2 Sample Analysis 14A-9
   7.3 Canister Cleaning System 14A-11
   7.4 Calibration System and Manifold 14A-11

8. Reagents and Materials 14A-11
   8.1 Gas Cylinders of Helium, Hydrogen, Nitrogen, and Zero Air 14A-11
   8.2 Gas Calibration Standards 14A-11
   8.3 Cryogen 14A-12
   8.4 Gas Purifiers 14A-12
   8.5 Deionized Water 14A-12
   8.6 4-Bromofluorobenzene 14A-12
   8.7 Hexane 14A-12
   8.8 Methanol 14A-12

9. Sampling System 14A-12
   9.1 System Description 14A-12
      9.1.1 Subatmospheric Pressure Sampling 14A-12
      9.1.2 Pressurized Sampling 14A-13
      9.1.3 All Samplers 14A-13
   9.2 Sampling Procedure 14A-14

TABLE OF CONTENTS (continued)

Page

10. Analytical System 14A-15
    10.1 System Description 14A-16
    10.2 GC/MS/SCAN/SIM System Performance Criteria 14A-19
    10.3 GC/FID/ECD System Performance Criteria (With Optional PID System) 14A-20
    10.4 Analytical Procedures 14A-22

11. Cleaning and Certification Program 14A-25
    11.1 Canister Cleaning and Certification 14A-25
    11.2 Sampling System Cleaning and Certification 14A-26

12. Performance Criteria and Quality Assurance 14A-27
    12.1 Standard Operating Procedures (SOPs) 14A-27
    12.2 Method Relative Accuracy and Linearity 14A-27
    12.3 Method Modification 14A-28
    12.4 Method Safety 14A-29
    12.5 Quality Assurance 14A-29

13. Acknowledgements 14A-30

14. References 14A-32

APPENDIX A. Availability of VOC Standards From U. S. Environmental Protection Agency (USEPA)
APPENDIX B. Operating Procedures for a Portable Gas Chromatograph Equipped with a Photoionization Detector
APPENDIX C. Installation and Operating Procedures for Alternative Air Toxics Samplers

METHOD TO-14A

Determination Of Volatile Organic Compounds (VOCs) In Ambient Air Using Specially Prepared Canisters With Subsequent Analysis By Gas Chromatography

1. Scope

1.1 This document describes a procedure for sampling and analysis of volatile organic compounds (VOCs) in ambient air. The method was originally based on collection of whole air samples in SUMMA® passivated stainless steel canisters, but has now been generalized to other specially prepared canisters (see Section 7.1.1.2). The VOCs are separated by gas chromatography and measured by a mass spectrometer or by multidetector techniques. This method presents procedures for sampling into canisters to final pressures both above and below atmospheric pressure (respectively referred to as pressurized and subatmospheric pressure sampling).

1.2 This method is applicable to specific VOCs that have been tested and determined to be stable when stored in pressurized and sub-atmospheric pressure canisters. Numerous compounds, many of which are chlorinated VOCs, have been successfully tested for storage stability in pressurized canisters (1-3). However, minimal documentation is currently available demonstrating stability of VOCs in subatmospheric pressure canisters.

1.3 The Compendium Method TO-14A target list is shown in Table 1. These compounds have been successfully stored in canisters and measured at the parts per billion by volume (ppbv) level. This method applies under most conditions encountered in sampling of ambient air into canisters. However, the composition of a gas mixture in a canister, under unique or unusual conditions, will change so that the sample is known not to be a true representation of the ambient air from which it was taken. For example, low humidity conditions in the sample may lead to losses of certain VOCs on the canister walls, losses that would not happen if the humidity were higher. If the canister is pressurized, then condensation of water from high humidity samples may cause fractional losses of water-soluble compounds. Since the canister surface area is limited, all gases are in competition for the available active sites. Hence an absolute storage stability cannot be assigned to a specific gas. Fortunately, under conditions of normal usage for sampling ambient air, most VOCs can be recovered from canisters near their original concentrations after storage times of up to thirty days.

2. Summary of Method

2.1 Both subatmospheric pressure and pressurized sampling modes typically use an initially evacuated canister and pump-ventilated sample line during sample collection. Pressurized sampling requires an additional pump to provide positive pressure to the sample canister. A sample of ambient air is drawn through a sampling train comprised of components that regulate the rate and duration of sampling into a pre-evacuated specially prepared passivated canister.

2.2 After the air sample is collected, the canister valve is closed, an identification tag is attached to the canister, a chain-of-custody (COC) form completed, and the canister is transported to a predetermined laboratory for analysis.

2.3 Upon receipt at the laboratory, the canister tag data is recorded, the COC completed, and the canister is attached to the analytical system. During analysis, water vapor is reduced in the gas stream by a Nafion® dryer (if applicable), and the VOCs are then concentrated by collection in a cryogenically-cooled trap. The cryogen is then removed and the temperature of the trap is raised. The VOCs originally collected in the trap are

revolatilized, separated on a GC column, then detected by one or more detectors for identification and quantitation.

2.4 The analytical strategy for Compendium Method TO-14A involves using a high-resolution gas chromatograph (GC) coupled to one or more appropriate GC detectors. Historically, detectors for a GC have been divided into two groups: non-specific detectors and specific detectors. The non-specific detectors include, but are not limited to, the nitrogen-phosphorus detector (NPD), the flame ionization detector (FID), the electron capture detector (ECD) and the photo-ionization detector (PID). The specific detectors include the linear quadrupole mass spectrometer (MS) operating in either the select ion monitoring (SIM) mode or the SCAN mode, or the ion trap detector (see Compendium Method TO-15). The use of these detectors or a combination of these detectors as part of the analytical scheme is determined by the required specificity and sensitivity of the application. While the non-specific detectors are less expensive per analysis and in some cases far more sensitive than the specific detectors, they vary in specificity and sensitivity for a specific class of compounds. For instance, if multiple halogenated compounds are targeted, an ECD is usually chosen; if only compounds containing nitrogen or phosphorus are of interest, a NPD can be used; or, if a variety of hydrocarbon compounds are sought, the broad response of the FID or PID is appropriate. In each of these cases, however, the specific identification of the compound within the class is determined only by its retention time, which can be subject to shifts or to interference from other non-targeted compounds. When misidentification occurs, the error is generally a result of a cluttered chromatogram, making peak assignment difficult. In particular, the more volatile organics (chloroethanes, ethyltoluenes, dichlorobenzenes, and various freons) exhibit less well defined chromatographic peaks, leading to possible misidentification when using nonspecific detectors. Quantitative comparisons indicate that the FID is more subject to error than the ECD because the ECD is a much more selective detector and exhibits a stronger response. Identification errors, however, can be reduced by: (a) employing simultaneous detection by different detectors or (b) correlating retention times from different GC columns for confirmation. In either case, interferences on the non-specific detectors can still cause error in identifying compounds of a complex sample. The non-specific detector system (GC/NPD/FID/ECD/PID), however, has been used for approximate quantitation of relatively clean samples. The non-specific detector system can provide a "snapshot" of the constituents in the sample, allowing determination of:

— Extent of misidentification due to overlapping peaks.
— Determination of whether VOCs are within or not within concentration range, thus requiring further analysis by specific detectors (GC/MS/SCAN/SIM) (i.e., if too concentrated, the sample is further diluted).
— Provide data as to the existence of unexpected peaks which require identification by specific detectors.

On the other hand, the use of specific detectors (MS coupled to a GC) allows positive compound identification, thus lending itself to more specificity than the multidetector GC. Operating in the SIM mode, the MS can readily approach the same sensitivity as the multidetector system, but its flexibility is limited. For SIM operation the MS is programmed to acquire data for a limited number of targeted compounds. In the SCAN mode, however, the MS becomes a universal detector, often detecting compounds which are not detected by the multidetector approach. The GS/MS/SCAN will provide positive identification, while the GC/MS/SIM procedure provides quantitation of a restricted list of VOCs, on a preselected target compound list (TCL).

If the MS is based upon a standard ion trap design, only a scanning mode is used (note however, that the Select Ion Storage (SIS) mode of the ion trap has features of the SIM mode). See Compendium Method TO-15 for further explanation and applicability of the ion-trap to the analysis of VOCs from specially prepared canisters.

The analyst often must decide whether to use specific or non-specific detectors by considering such factors as project objectives, desired detection limits, equipment availability, cost and personnel capability in developing an analytic strategy. A list of some of the advantages and disadvantages associated with non-specific and specific detectors may assist the analyst in the decision-making process.

Non-specific Multidetector Analytical System

Advantages

- Somewhat lower equipment cost than GC/MS
- Less sample volume required for analysis
- More sensitive
  - ECD may be 1000 times more sensitive than GC/MS

Disadvantages

- Multiple detectors to calibrate
- Compound identification not positive
- Lengthy data interpretation (1 hour each for analysis and data reduction)
- Interference(s) from co-eluting compound(s)
- Cannot identify unknown compounds
  - outside range of calibration
  - without standards
- Does not differentiate targeted compounds from interfering compounds

Specific Detector Analytical System

GC/MS/SIM

Advantages

- positive compound identification
- greater sensitivity than GC/MS/SCAN
- less operator interpretation than for multidetector GC
- can resolve co-eluting peaks
- more specific than the multidetector GC

Disadvantages

- cannot identify nonspecified compounds (ions)
- somewhat greater equipment cost than multidetector GC
- greater sample volume required than for multidetector GC
- universality of detector sacrified to achieve enhancement in sensitivity

GC/MS/SCAN

- positive compound identification
- can identify all compounds
- less operator interpretation
- can resolve co-eluting peaks

- lower sensitivity than GC/MS/SIM
- greater sample volume required than for multidetector GC
- somewhat greater equipment cost than multidetector GC

The analytical finish for the measurement chosen by the analyst should provide a definitive identification and a precise quantitation of volatile organics. In a large part, the actual approach to these two objectives is subject to equipment availability. Figure 1 indicates some of the favorite options that are used in Compendium Method TO-14A. The GC/MS/SCAN option uses a capillary column GC coupled to a MS operated in a scanning mode and supported by spectral library search routines. This option offers the nearest approximation to

unambiguous identification and covers a wide range of compounds as defined by the completeness of the spectral library. GC/MS/SIM mode is limited to a set of target compounds which are user defined and is more sensitive than GC/MS/SCAN by virtue of the longer dwell times at the restricted number of m/z values. Both these techniques, but especially the GC/MS/SIM option, can use a supplemental general nonspecific detector to verify/identify the presence of VOCs. Finally the option labelled GC-multidetector system uses a combination of retention time and multiple general detector verification to identify compounds. However, interference due to nearly identical retention times can affect system quantitation when using this option.

Due to low concentrations of toxic VOCs encountered in urban air (typically less than 25 ppbv and the majority below 10 ppbv) along with their complicated chromatographs, Compendium Method TO-14A strongly recommends the specific detectors (GC/MS/SCAN/SIM) for positive identification and for primary quantitation to ensure that high-quality ambient data is acquired.

For the experienced analyst whose analytical system is limited to the non-specific detectors, Section 10.3 does provide guidelines and example chromatograms showing typical retention times and calibration response factors, and utilizing the nonspecific detectors (GC/FID/ECD/PID) analytical system as the primary quantitative technique.

Compendium Method TO-15 is now available as a guidance document containing additional advice on the monitoring of VOCs. Method TO-15 contains information on alternative water management systems, has a more complete quality control section, shows performance criteria that any monitoring technique must achieve for acceptance, and provides guidance specifically directed at compound identification by mass spectrometry.

3. Significance

3.1 The availability of reliable, accurate and precise monitoring methods for toxic VOCs is a primary need for state and local agencies addressing daily monitoring requirements related to odor complaints, fugitive emissions, and trend monitoring. VOCs enter the atmosphere from a variety of sources, including petroleum refineries, synthetic organic chemical plants, natural gas processing plants, biogenic sources, and automobile exhaust. Many of these VOCs are toxic so that their determination in ambient air is necessary to assess human health impacts.

3.2 The canister-based monitoring method for VOCs has proven to be a viable and widely used approach that is based on research and evaluation performed since the early 1980s. This activity has involved the testing of sample stability of VOCs in canisters and the design of time-integrative samplers. the development of procedures for analysis of samples in canisters, including the procedure for VOC preconcentration from whole air, the treatment of water vapor in the sample, and the selection of an appropriate analytical finish has been accomplished. The canister-based method was initially summarized by EPA as Method TO-14 in the First Supplement to the *Compendium of Methods for the Determination of Toxic Organic Compounds in Ambient Air*. The present document updates the original Compendium Method TO-14 with correction of time-sensitive information and other minor changes as deemed appropriate.

3.3 The canister-based method is now a widely used alternative to the solid sorbent-based methods. The method has sub-ppbv detection limits for samples of typically 300-500 mL of whole air and duplicate and replicate precisions under 20 percent as determined in field tests. Audit bias values average within the range of ±10 percent. These performance parameters are generally adequate for monitoring at the 10^{-5} lifetime exposure risk levels for many VOCs.

3.4 Collection of ambient air samples in canisters provides a number of advantages: (1) convenient integration of ambient samples over a specific time period (e.g., 24 hours); (2) remote sampling and central analysis; (3) ease of storing and shipping samples; (4) unattended sample collection; (5) analysis of samples from multiple sites with one analytical system; (6) collection of sufficient sample volume to allow assessment of measurement precision and/or analysis of samples by several analytical systems; and (7) storage stability for many VOCs over periods of up to 30 days. To realize these advantages, care must be exercised in selection, cleaning, and handling sample canisters and sampling apparatus to avoid losses or contamination.

3.5 Interior surfaces of canisters are treated by any of a number of passivation processes, one of which is SUMMA polishing as identified in the original Compendium Method TO-14. Other specially prepared canisters are also available (see Section 7.1.1.2).

3.6 The canister-based method for monitoring VOCs is the alternative to the solid sorbent-based method described in conventional methods such as the Compendium Methods TO-1 and TO-2, and in the new Compendium Method TO-17 that describes the use multisorbent packings including the use of new carbon-based sorbents. It also is an alternative to on-site analysis in those cases where integrity of samples during storage and transport has been established.

4. Applicable Documents

4.1 ASTM Standards

- Method D1356 *Definition of Terms Relating to Atmospheric Sampling and Analysis*
- Method E260 *Recommended Practice for General Gas Chromatography*
- Method E355 *Practice for Gas Chromatography Terms and Relationships*
- Method D31357 *Practice for Planning and Sampling of Ambient Atmospheres*
- Method D5466-93 *Determination of Volatile Organic Chemicals in Atmospheres (Canister Sampling Methodology)*

4.2 EPA Documents

- *Technical Assistance Document for Sampling and Analysis Toxic Organic Compounds in Ambient Air*, U. S. Environmental Protection Agency, EPA-600/4-83-027, June 1983.
- *Quality Assurance Handbook for Air Pollution Measurement Systems*, U. S. Environmental Protection Agency, EPA-600/R-94-038b, May 1994.
- *Compendium of Methods for the Determination of Toxic Organic Compounds in Ambient Air: Method TO-14, Second Supplement*, U. S. Environmental Protection Agency, EPA 600/4-89-018, March 1989.
- *Compendium of Methods for the Determination of Toxic Organic Compounds in Ambient Air: Method TO-15, Second Edition*, U. S. Environmental Protection Agency, EPA 625/R-96-010b, January 1997.
- *Compendium of Methods for the Determination of Toxic Organic Compounds in Ambient Air, First Supplement*, U. S. Environmental Protection Agency, Research Triangle Park, NC, EPA-600/4-87-006, September 1997.
- *Compendium of Methods for the Determination of Toxic Organic Compounds in Ambient Air: Method TO-1*, U. S. Environmental Protection Agency, Research Triangle Park, NC, EPA-600/4-84-041, 1986.

4.3 Other Documents

- U. S. Environmental Protection Agency Technical Assistance Document (3).
- Laboratory and Ambient Air Studies (4-17).

5. Definitions

[Note: Definitions used in this document and any user-prepared Standard Operating Procedures (SOPSs) should be consistent with those used in ASTM D1356. All abbreviations and symbols are defined within this document at the point of first use.]

5.1 Absolute Canister Pressure (Pg+Pa)—gauge pressure in the canister (kPa, psi) and Pa = barometric pressure (see Section 5.2).

5.2 Absolute Pressure—pressure measured with reference to absolute zero pressure (as opposed to atmospheric pressure), usually expressed as kPa, mm Hg or psia.

5.3 Cryogen—a refrigerant used to obtain very low temperatures in the cryogenic trap of the analytical system. A typical cryogen is liquid nitrogen (bp –195.8°C) or liquid argon (bp –185.7°C).

5.4 Dynamic Calibration—calibration of an analytical system using calibration gas standard concentrations in a form identical or very similar to the samples to be analyzed and by introducing such standards into the inlet of the sampling or analytical system in a manner very similar to the normal sampling or analytical process.

5.5 Gauge Pressure—pressure measured above ambient atmospheric pressure (as opposed to absolute pressure). Zero gauge pressure is equal to ambient atmospheric (barometric) pressure.

5.6 MS/SCAN—the GC is coupled to a MS programmed in the SCAN mode to scan all ions repeatedly during the GC run. As used in the current context, this procedure serves as a qualitative identification and characterization of the sample.

5.7 MS/SIM—the GC is coupled to a MS programmed to acquire data for only specified ions and to disregard all others. This is performed using SIM coupled to retention time discriminators. The GC/SIM analysis provides quantitative results for selected constituents of the sample gas as programmed by the user.

5.8 Megabore® Column—chromatographic column having an internal diameter (I.D.) greater than 0.50-mm. The Megabore® column is a trademark of the J&W Scientific Co. For purposes of this method, Megabore® refers to chromatographic columns with 0.53-mm I.D.

5.9 Pressurized Sampling—collection of an air sample in a canister with a (final) canister pressure above atmospheric pressure, using a sample pump.

5.10 Qualitative Accuracy—the ability of an analytical system to correctly identify compounds.

5.11 Quantitative Accuracy—the ability of an analytical system to correctly measure the concentration of an identified compound.

5.12 Static Calibration—calibration of an analytical system using standards in a form different from the samples to be analyzed. An example of a static calibration would be injecting a small volume of a high concentration standard directly onto a GC column, bypassing the sample extraction and preconcentration portion of the analytical system.

5.13 Subatmospheric Sampling—collection of an air sample in an evacuated canister at a (final) canister pressure below atmospheric pressure, without the assistance of a sampling pump. The canister is filled as the internal canister pressure increases to ambient or near ambient pressure. An auxiliary vacuum pump may be used as part of the sampling system to flush the inlet tubing prior to or during sample collection.

6. Interferences and Limitations

6.1 Interferences can occur in sample analysis if moisture accumulates in the dryer (see Section 10.1.1.2). An automated cleanup procedure that periodically heats the dryer to about 100°C while purging with zero air eliminates any moisture buildup. This procedure does not degrade sample integrity for Compendium Method TO-14A target compound list (TCL) but can affect some organic compounds.

6.2 Contamination may occur in the sampling system if canisters are not properly cleaned before use. Additionally, all other sampling equipment (e.g., pump and flow controllers) should be thoroughly cleaned to ensure that the filling apparatus will not contaminate samples. Instructions for cleaning the canisters and certifying the field sampling system are described in Sections 11.1 and 11.2, respectively.

6.3 The Compendium Method TO-14A analytical system employs a Nafion® permeable membrane dryer to remove water vapor from the sample stream. Polar organic compounds permeate this membrane in a manner similar to water vapor and rearrangements can occur in some hydrocarbons due to the acid nature of the dryer. Compendium Method TO-15 provides guidance associated with alternative water management systems applicable to the analysis of a large group of VOCs in specially-treated canisters.

7. Apparatus

[Note: Equipment manufacturers identified in this section were originally published in Compendium Method TO-14 as possible sources of equipment. They are repeated in Compendium Method TO-14A as reference only. Other manufacturers' equipment should work as well, as long as the equipment is equivalent. Modifications to these procedures may be necessary if using other manufacturers' equipment.]

7.1 Sample Collection

[Note: Subatmospheric pressure and pressurized canister sampling systems are commercially available and have been used as part of U.S. Environmental Protection Agency's Toxic Air Monitoring Stations (TAMS), Urban Air Toxic Monitoring Program (UATMP), the non-methane organic compound (NMOC) Sampling and Analysis Program, and in the Photochemical Assessment Monitoring Stations (PAMS).]

7.1.1 Subatmospheric Pressure (see Figure 2 Without Metal Bellows Type Pump).

7.1.1.1 Sampling Inlet Line. Stainless steel tubing to connect the sampler to the sample inlet.

7.1.1.2 Specially-Treated Sample Canister. Leak-free stainless steel pressure vessels of desired volume (e.g., 6 L), with valve and passivated interior surfaces. Major manufacturers and re-suppliers are:

- BRC/Ramussen
  17010 NW Skyline Blvd.
  Portland, OR 97321
- Meriter
  1790 Potrero Drive
  San Jose, CA 95124
- Restec Corporation
  110 Benner Circle
  Bellefonte, PA 16823-8812
- XonTech Inc.
  6862 Hayenhurst Avenue
  Van Nuys, CA 91406
- Scientific Instrumentation Specialists
  P.O. Box 8941
  Moscow, ID 83843
- Graseby
  500 Technology Ct.
  Smyrna, GA 30832

7.1.1.3 Stainless Steel Vacuum/Pressure Gauge. Capable of measuring vacuum (–100 to 0 kPa or 0 to 30 in. Hg) and pressure (0–206 kPa or 0–30 psig) in the sampling system, Matheson, P.O. Box 136, Morrow, GA 30200, Model 63-3704, or equivalent. Gauges should be tested clean and leak tight.

7.1.1.4 Electronic Mass Flow Controller. Capable of maintaining a constant flow rate (± 10%) over a sampling period of up to 24 hours and under conditions of changing temperature (20–40°C) and humidity, Tylan Corp., 19220 S. Normandie Ave., Torrance, CA 90502, Model FC-260, or equivalent.

7.1.1.5 Particulate Matter Filter. 2-μm sintered stainless steel in-line filter, Nupro Co., 4800 E. 345th St., Willoughby, OH 44094, Model SS-2F-K4-2, or equivalent.

7.1.1.6 Electronic Timer. For unattended sample collection, Paragon Elect. Co., 606 Parkway Blvd., P.O. Box 28, Twin Rivers, WI 54201, Model 7008-00, or equivalent.

7.1.1.7 Solenoid Valve. Electrically-operated, bi-stable solenoid valve, Skinner Magnelatch Valve, New Britain, CT, Model V5RAM49710, with Viton® seat and o-rings. A Skinner Magnelatch valve is used for purposes of illustration only in Figures 2 and 3.

7.1.1.8 Chromatographic Grade Stainless Steel Tubing and Fittings. For interconnections, Alltech Associates, 2051 Waukegan Rd., Deerfield, IL 60015, Cat. #8125, or equivalent. All such materials in contact with sample, analyte, and support gases prior to analysis should be chromatographic grade stainless steel.

7.1.1.9 Thermostatically Controlled Heater. To maintain temperature inside insulated sampler enclosure above ambient temperature, Watlow Co., Pfafftown, NC, Part 04010080, or equivalent.

7.1.1.10 Heater Thermostat. Automatically regulates heater temperature, Elmwood Sensors, Inc., 500 Narragansett Park Dr., Pawtucket, RI 02861, Model 3455-RC-0100-0222, or equivalent.

7.1.1.11 Fan. For cooling sample system, EG&G Rotron, Woodstock, NY, Model SUZAI, or equivalent.

7.1.1.12 Fan Thermostat. Automatically regulates fan operation, Elmwood Sensors, Inc., Pawtucket, RI, Model 3455-RC-0100-0244, or equivalent.

7.1.1.13 Maximum-Minimum Thermometer. Records highest and lowest temperatures during sampling period, Thomas Scientific, Brooklyn Thermometer Co., Inc., P/N 9327H30, or equivalent.

7.1.1.14 Stainless Steel Shut-Off Valve. Leak free, for vacuum/pressure gauge.

7.1.1.15 Auxiliary Vacuum Pump. Continuously draws ambient air through the inlet manifold at 10 L/min. or higher flow rate. Sample is extracted from the manifold at a lower rate, and excess air is exhausted.

[Note: The use of higher inlet flow rates dilutes any contamination present in the inlet and reduces the possibility of sample contamination as a result of contact with active adsorption sites on inlet walls.]

7.1.1.16 Elapsed Time Meter. Measures duration of sampling, Conrac, Cramer Div., Old Saybrook, CT, Type 6364, P/N 10082, or equivalent.

7.1.1.17 Optional Fixed Orifice, Capillary, or Adjustable Micrometering Valve. May be used in lieu of the electronic flow controller for grab samples or short duration time-integrated samples. Usually appropriate only in situations where screening samples are taken to assess future sampling activity.

7.1.2 Pressurized (see Figure 2 With Metal Bellows Type Pump and Figure 3).

7.1.2.1 Sample Pump. Stainless steel, metal bellows type, Metal Bellows Corp., 1075 Providence Highway, Sharon, MA 02067, Model MB-151, or equivalent, capable of 2 atmospheres output pressure. Pump must be free of leaks, clean, and uncontaminated by oil or organic compounds.

[Note: An alternative sampling system has been developed by Dr. R. Rasmussen, The Oregon Graduate Institute of Science and Technology, 20000 N.W. Walker Rd., Beaverton, Oregon 97006, 503-690-1077, (17,18) and is illustrated in Figure 3. This flow system uses, in order, a pump, a mechanical flow regulator, and a mechanical compensation flow restrictive device. In this configuration the pump is purged with a large sample flow, thereby eliminating the need for an auxiliary vacuum pump to flush the sample inlet. Interferences using this configuration have been minimal.]

7.1.2.2 Other Supporting Materials. All other components of the pressurized sampling system (see Figure 2 with metal bellows type pump and Figure 3) are similar to components discussed in Sections 7.1.1.1 through 7.1.1.16.

7.2 Sample Analysis

7.2.1 GC/MS/SCAN Analytical System (see Figure 4).

7.2.1.1 Gas Chromatograph. Capable of subambient temperature programming for the oven, with other generally standard features such as gas flow regulators, automatic control of valves and integrator, etc. Flame ionization detector optional, Hewlett Packard, Rt. 41, Avondale, PA 19311, Model 5880A, with oven temperature control and Level 4 BASIC programming, or equivalent. The GS/MS/SCAN analytical system must be capable of acquiring and processing data in the MS/SCAN mode.

7.2.1.2 Chromatographic Detector. Mass-selective detector, Hewlett Packard, 3000-T Hanover St., 9B, Palo Alto, CA 94304, Model HP-5970 MS, or equivalent, equipped with computer and appropriate software, Hewlett Packard, 3000-T Hanover St., 9B, Palo Alto, CA 94304, HP-216 Computer, Quicksilver MS software, Pascal 3.0, mass storage 9133 HP Winchester with 3.5 inch floppy disk, or equivalent. The GC/MS is set in the SCAN mode, where the MS screens the sample for identification and quantitation of VOC species.

7.2.1.3 Cryogenic Trap with Temperature Control Assembly. Refer to Section 10.1.1.3 for complete description of trap and temperature control assembly, Graseby, 500 Technology Ct., Smyrna, GA 30082) Model 320-01, or equivalent.

7.2.1.4 Electronic Mass Flow Controllers (3). Maintain constant flow (for carrier gas and sample gas) and to provide analog output to monitor flow anomalies, Tylan Model 260, 0–100 mL/min, or equivalent.

7.2.1.5 Vacuum Pump. General purpose laboratory pump, capable of drawing the desired sample volume through the cryogenic trap, Thomas Industries, Inc., Sheboygan, WI, Model 107BA20, or equivalent.

7.2.1.6 Chromatographic Grade Stainless Steel Tubing and Stainless Steel Plumbing Fittings. Refer to Section 7.1.1.8 for description.

7.2.1.7 Chromatographic Column. To provide compound separation such as shown in Table 5. Hewlett Packard, Rt. 41, Avondale, PA 19311. Typical GC column for this application is OV-1 capillary column, 0.32-mm x 50 m with 0.88-μm crosslinked methyl silicone coating, or equivalent.

7.2.1.8 Stainless Steel Vacuum/Pressure Gauge (Optional). Capable of measuring vacuum (–101.3 to 0 kPa) and pressure (0-206 kPa) in the sampling system, Matheson, P.O. Box 136, Morrow, GA 30200, Model 63-3704, or equivalent. Gauges should be tested clean and tight.

7.2.1.9 Stainless Steel Cylinder Pressure Regulators. Standard, two-stage cylinder pressure gauges for helium, zero air and hydrogen gas cylinders.

7.2.1.10 Gas Purifiers (3). Used to remove organic impurities and moisture from gas streams, Hewlett Packard, Rt. 41, Avondale, PA 19311, P/N 19362 - 60500, or equivalent.

7.2.1.11 Low Dead-Volume Tee (optional). Used to split the exit flow from the GC column, Alltech Associates, 2051 Waukegan Rd., Deerfield, IL 60015, Cat. #5839, or equivalent.

7.2.1.12 Nafion® Dryer. Consisting of Nafion tubing coaxially mounted within larger tubing, Perma Pure Products, 8 Executive Drive, Toms River, NJ 08753, Model MD-125-48, or equivalent. Refer to Section 10.1.1.2 for description.

7.2.1.13 Six-Port Gas Cromatographic Valve. Seismograph Service Corp., Tulsa, OK, Seiscor Model VIII, or equivalent.

7.2.1.14 Chart Recorder (optional). Compatible with the detector output signal to record optional FID detector response to the sample.

7.2.1.15 Electronic Integrator (optional). Compatible with the detector output signal of the FID and capable of integrating the area of one or more response peaks and calculating peak areas corrected for baseline drift.

7.2.2 GC/MS/SIM Analytical System (see Figure 4).

7.2.2.1 The GC/MS/SIM analytical system must be capable of acquiring and processing data in the MS-SIM mode.

7.2.2.2 All components of the GC/MS/SIM system are identical to Sections 7.2.1.1 through 7.2.1.15.

7.2.3 GC-Multidetector Analytical System (see Figure 5 and Figure 6).

7.2.3.1 Gas Chromatograph with Flame Ionization and Electron Capture Detectors (Photoionization Detector Optional). Capable of sub-ambient temperature programming for the oven and simultaneous operation of all detectors, and with other generally standard features such as gas flow regulators, automatic control of valves and integrator, etc., Hewlett Packard, Rt. 41, Avondale, PA 19311, Model 5990A, with oven temperature control and Level 4 BASIC programming, or equivalent.

7.2.3.2 Chart Recorders. Compatible with the detector output signals to record detector response tot he sample.

7.2.3.3 Electronic Integrator. Compatible with the detector output signals and capable of integrating the area of one or more response peaks and calculating peak areas corrected for baseline drift.

7.2.3.4 Six-Port Gas Chromatographic Valve. See Section 7.2.1.13.

7.2.3.5 Cryogenic Trap with Temperature Control Assembly. Refer to Section 10.1.1.3 for complete description of trap and temperature control assembly, Graseby, 500 Technology Ct., Smyrna, GA 30082, Model 320-01, or equivalent.

7.2.3.6 Electronic Mass Flow Controllers (3). Maintain constant flow (for carrier gas, nitrogen make-up gas and sample gas) and to provide analog output to monitor flow anomalies, Tylan Model 260, 0–100 mL/min, or equivalent.

7.2.3.7 Vacuum Pump. General purpose laboratory pump, capable of drawing the desired sample volume through the cryogenic trap (see Section 7.2.1.6 for source and description).

7.2.3.8 Chromatographic Grade Stainless Steel Tubing and Stainless Steel Plumbing Fittings. Refer to Section 7.1.1.8 for description.

7.2.3.9 Chromatographic Column. To provide compound separation such as shown in Table 7, Hewlett Packard, Rt. 41, Avondale, PA 19311. Typical GC column for this application is OV-1 capillary column, 0.32 mm x 50 m with 0.88 um crosslinked methyl silicone coating, or equivalent.

[Note: Other columns (e.g., DB-624) can be used as long as the system meets user needs. The Wider Megabore® column (i.e., 0.53-mm I.D.) is less susceptible to plugging as a result of trapped water, thus eliminating the need for Nafion® dryer in the analytical system. The Megabore® column has sample capacity approaching that of a packed column, while retaining much of the peak resolution traits of narrower columns (i.e., 0.32-mm I.D.).]

7.2.3.10 Vacuum/Pressure Gauges (3). Refer to Section 7.2.1.9 for description.

7.2.3.11 Cylinder Pressure Stainless Steel Regulators. Standard, two-stage cylinder regulators with pressure gauges for helium, zero air, nitrogen, and hydrogen gas cylinders.

7.2.3.12 Gas Purifiers (4). Used to remove organic impurities and moisture from gas streams, Hewlett Packard, Rt. 41, Avondale, PA 19311, P/N 19362 - 60500, or equivalent.

7.2.3.13 Low Dead-Volume Tee. Used to split (50/50) the exit flow from the GC column, Alltech Associates, 2051 Waukegan Rd., Deerfield, IL 60015, Cat. #5839, or equivalent.

7.3 Canister Cleaning System (see Figure 7)

7.3.1 Vacuum Pump. Capable of evacuating sample canister(s) to an absolute pressure of <0.05 mm Hg.

7.3.2 Manifold. Stainless steel manifold with connections for simultaneously cleaning several canisters.

7.3.3 Shut-off Valve(s). Seven (7) on-off toggle valves.

7.3.4 Stainless Steel Vacuum Gauge. Capable of measuring vacuum in the manifold to an absolute pressure of 0.05 mm Hg or less.

7.3.5 Cryogenic Trap (2 required). Stainless steel U-shaped open tubular trap cooled with liquid oxygen or argon to prevent contamination from back diffusion of oil from vacuum pump and to provide clean, zero air to sample canister(s).

7.3.6 Stainless Steel Pressure Gauges (2). 0-345 kPa (0-50 psig) to monitor zero air pressure.

7.3.7 Stainless Steel Flow Control Valve. To regulate flow of zero air into canister(s).

7.3.8 Humidifier. Pressurizable water bubbler containing high performance liquid chromatography (HPLC) grade deionized water or other system capable of providing moisture to the zero air supply.

7.3.9 Isothermal Oven (optional). For heating canisters, Fisher Scientific, Pittsburgh, PA, Model 349, or equivalent.

7.4 Calibration System and Manifold (see Figure 8)

7.4.1 Calibration Manifold. Glass manifold, (1.25-cm I.D. x 66-cm) with sampling ports and internal baffles for flow disturbance to ensure proper mixing.

7.4.2 Humidifier. 500-mL impinger flask containing HPLC grade deionized water.

7.4.3 Electronic Mass Flow Controllers. One 0 to 5 L/min and one 0 to 50 mL/min, Tylan Corporation, 23301-TS Wilmington Ave., Carson, CA 90745, Model 2160, or equivalent.

7.4.4 Teflon® Filter(s). 47-mm Teflon® filter for particulate control, best source.

8. Reagents and Materials

8.1 Gas Cylinders of Helium, Hydrogen, Nitrogen, and Zero Air. Ultrahigh purity grade, best source.

8.2 Gas Calibration Standards. Cylinder(s) containing approximately 10 ppmv of each of the following compounds of interest:

vinyl chloride
vinylidene chloride
1,1,2-trichloro-1,2,2-trifluoroethane
chloroform
1,2-dichloroethane
benzene

toluene
Freon 12
methyl chloride
1,2-dichloro-1,1,2,2-tetrafluoroethane
methyl bromide
ethyl chloride
Freon 11
dichloromethane
1,1-dicholoroethane
cis-1,2-dicholoroethylene
1,2-dichloropropane
1,1,2-trichloroethane
1,2-dibromoethane
tetrachloroethylene
chlorobenzene
benzyl chloride
hexachloro-1,3-butadiene

methyl chloroform
carbon tetrachloride
trichloroethylene
cis-1,3-dichloropropene
trans-1,3-dichloropropene
ethylbenzene
o-xylene
m-xylene
p-xylene
styrene
1,1,2,2-tetrachloroethane
1,3,5-trimethylbenzene
1,2,4-trimethylbenzene
m-dichlorobenzene
o-dichlorobenzene
p-dichlorobenzene
1,2,4-trichlorobenzene

The cylinder should be traceable to a National Institute of Standards and Technology (NIST) Standard Reference Material (SRM). The components may be purchased in one cylinder or may be separated into different cylinders. Refer to manufacturer's specification for guidance on purchasing and mixing VOCs in gas cylinders. Those compounds purchased should match one's own TCL.

8.3 Cryogen. Liquid nitrogen (bp –195.8°C) or liquid argon (bp –185.7°C), best source.

8.4 Gas Purifiers. Connected in-line between hydrogen, nitrogen, and zero air gas cylinders and system inlet line, to remove moisture and organic impurities from gas streams, Alltech Associates, 2051 Waukegan Rd., Deerfield, IL 60015, or equivalent.

8.5 Deionized Water. HPLC grade, ultrahigh purity (for humidifier), best source.

8.6 4-Bromofluorobenzene. Used for tuning GC/MS, best source.

8.7 Hexane. For cleaning sample system components, reagent grade, best source.

8.8 Methanol. For cleaning sampling system components, reagent garde, best source.

9. Sampling System

9.1 System Description

9.1.1 Subatmospheric Pressure Sampling [see Figure 2 (Without Metal Bellows Type Pump)].

9.1.1.1 In preparation for subatmospheric sample collection in a canister, the canister is evacuated to 0.05 mm Hg. When opened to the atmosphere containing the VOCs to be sampled, the differential pressure causes the sample to flow into the canister. This technique may be used to collect grab samples (duration of 10 to 30 seconds) or time-integrated samples (duration of 12-24 hours) taken through a flow-restrictive inlet (e.g., mass flow controller, critical orifice).

9.1.1.2 With a critical orifice flow restrictor, there will be a decrease in the flow rate as the pressure approaches atmospheric. However, with a mass flow controller, the subatmospheric sampling system can maintain a constant flow rate from full vacuum to within about 7 kPa (1.0 psig) or less below ambient pressure.

9.1.2 Pressurized Sampling [See Figure 2 (With Metal Bellows Type Pump)].

9.1.2.1 Pressurized sampling is used when longer-term integrated samples or higher volume samples are required. The sample is collected in a canister using a pump and flow control arrangement to achieve a typical 103-206 kPa (15-30 psig) final canister pressure. For example, a 6-liter evacuated canister can be filled at 10 mL/min for 24 hours to achieve a final pressure of about 144 kPa (21 psig).

9.1.2.2 In pressurized canister sampling,a metal bellows type pump draws in ambient air from the sampling manifold to fill and pressurize the sample canister.

9.1.3 All Samplers.

9.1.3.1 A flow control device is chosen to maintain a constant flow into the canister over the desired sample period. This flow rate is determined so the canister is filled (to about 88.1 kPa for subatmospheric pressure sampling or to about one atmosphere above ambient pressure for pressurized sampling) over the desired sample period. The flow rate can be calculated by

$$F = \frac{P \times V}{T \times 60}$$

where:

F = flow rate, mL/min.
P = final canister pressure, atmospheres absolute. P is approximately equal to

$$\frac{\text{kPa gauge}}{101.2} + 1$$

V = volume of the canister, mL.
T = sample period, hours.

For example, if a 6-L canister is to be filled to 202 kPa (2 atmospheres) absolute pressure in 24 hours, the flow rate can be calculated by

$$F = \frac{2 \times 6000}{24 \times 60} = 8.3 \text{ mL/min}$$

9.1.3.2 For automatic operation, the timer is wired to start and stop the pump at appropriate times for the desired sample period. The timer must also control the solenoid valve, to open the valve when starting the pump and close the valve when stopping the pump.

9.1.3.3 The use of the Skinner Magnelatch valve avoids any substantial temperature rise that would occur with a conventional, normally closed solenoid valve that would have to be energized during the entire sample period. The temperature rise in the valve could cause outgassing of organic compounds from the Viton valve seat material. The Skinner Magnelatch valve requires only a brief electrical pulse to open or close at the appropriate start and stop times and therefore experiences no temperature increase. The pulses may be obtained either with an electronic timer that can be programmed for short (5 to 60) seconds ON periods, or with a conventional mechanical timer and a special pulse circuit. A simple electrical pulse circuit for operating the Skinner Magnelatch solenoid valve with a conventional mechanical timer is illustrated in Figure 9(a). However, with this simple circuit, the valve may operate unreliably during brief power interruptions or if the timer is manually switched on and off too fast. A better circuit incorporating a time-delay relay to provide more reliable valve operation is shown in Figure 9(b).

9.1.3.4 The connecting lines between the sample inlet and the canister should be as short as possible to minimize their volume. The flow rate into the canister should remain relatively constant over the entire sampling period. If a critical orifice is used, some drop in the flow rate may occur near the end of the sample period as the canister pressure approaches the final calculated pressure.

9.1.3.5 As an option, a second electronic timer (see Section 7.1.1.6) may be used to start the auxiliary pump several hours prior to the sampling period to flush and condition the inlet line.

9.1.3.6 Prior to field use, each sampling system must pass a humid zero air certification (see Section 11.2.2). All plumbing should be check carefully for leaks. The canisters must also pass a humid zero air certification before use (see Section 11.1).

9.2 Sampling Procedure

9.2.1 The sample canister should be cleaned and tested according to the procedure in Section 11.1.

9.2.2 A sample collection system is assembled as shown in Figure 2 (and Figure 3) and must meet certification requirements as outlined in Section 11.2.3.

[Note: The sampling system should be contained in an appropriate enclosure.]

9.2.3 Prior to locating the sampling system, the user may want to perform "screening analyses" using a portable GC system, as outlined in Appendix B, to determine potential volatile organics present and potential "hot spots." The information gathered from the portable GC screening analysis would be used in developing a monitoring protocol, which includes the sampling system location, based upon the "screening analysis" results.

9.2.4 After "screening analysis," the sampling system is located. Temperatures of ambient air and sampler box interior are recorded on the Compendium Method TO-14A field test data sheet (FTDS), as illustrated in Figure 10.

[Note: The following discussion is related to Figure 2.]

9.2.5 To verify correct sample flow, a "practice" (evacuated) canister is used in the sampling system.

[Note: For a subatmospheric sampler, the flow meter and practice canister are needed. For the pump-driven system, the practice canister is not needed, as the flow can be measured at the outlet of the system.]

A certified mass flow meter is attached to the inlet line of the manifold, just in front of the filter. The canister is opened. The sampler is turned on and the reading of the certified mass flow meter is compared to the sampler mass flow controller. The valves should agree within ±10%. If not, the sampler mass flow meter needs to be recalibrated or there is a leak in the system. This should be investigated and corrected.

[Note: Mass flow meter readings may drift. Check the zero reading carefully and add or subtract the zero reading when reading or adjusting the sampler flow rate, to compensate for any zero drift.]

After two minutes, the desired canister flow rate is adjusted to the proper value (as indicated by the certified mass flow meter) by the sampler flow control unit controller (e.g., 3.5 mL/min for 24 hr, 7.0 mL/min for 12 hr). Record final flow under "CANISTER FLOW RATE," as provided in Figure 10.

9.2.6 The sampler is turned off and the elapsed time meter is reset to 000.0.

[Note: Any time the sampler is turned off, wait at least 30 seconds to turn the sampler back on.]

9.2.7 The "practice" canister and certified mass flow meter are disconnected and a clean certified (see Section 11.1) canister is attached to the system.

9.2.8 The canister valve and vacuum/pressure gauge valve are opened.

9.2.9 Pressure/vacuum in the canister is recorded on the canister sampling field data sheet (see Figure 10) as indicated by the sampler vacuum/pressure gauge.

9.2.10 The vacuum/pressure gauge valve is closed and the maximum-minimum thermometer is reset to current temperature. Time of day and elapsed time meter readings are recorded on the canister sampling field data sheet.

9.2.11 The electronic timer is set to begin and stop the sampling period at the appropriate times. Sampling commences and stops by the programmed electronic timer.

9.2.12 After the desired sampling period, the maximum, minimum, current interior temperature and current ambient temperature are recorded on the sampling field data sheet. The current reading from the flow controller is recorded.

9.2.13 At the end of the sampling period, the vacuum/pressure gauge valve on the sampler is briefly opened and closed and the pressure/vacuum is recorded on the sampling FTDS. Pressure should be close to desired pressure.

[Note: For a subatmospheric sampling system, if the canister is at atmospheric pressure when the field final pressure check is performed, the sampling period may be suspect. This information should be noted on the sampling FTDS.]

Time of day and elapsed time meter readings are also recorded.

9.2.14 The canister valve is closed. The sampling line is disconnected from the canister and the canister is removed from the system. For a subatmospheric system, a certified mass flow meter is once again connected to the inlet manifold in front of the in-line filter and a "practice" canister is attached to the Magnelatch valve of the sampling system. The final flow rate is recorded on the canister sampling field data sheet (see Figure 10).

[Note: For a pressurized system, the final flow may be measured directly.]

The sampler is turned off.

9.2.15 An identification tag is attached to the canister. Canister serial number, sample number, location, and date are recorded on the tag. Complete the Chain-of-Custody (COC) for the canister and ship back to the laboratory for analysis.

10. Analytical System (see Figures 4, 5 and 6)

[Note: The following section relates to the use of the linear quadrupole MS technology as the detector. The ion-trap technology is as applicable to the detection of VOCs from a specially-treated canister. EPA developed this method using the linear quadrupole MS, as part of it's air toxics field and laboratory monitoring programs over the last several years. Modifications to these procedures may be necessary if other technology is utilized.]

10.1 System Description

10.1.1 GC/MS/SCAN System.

10.1.1.1 The analytical system is comprised of a GC equipped with a mass-selective detector set in the SCAN mode (see Figure 4). All ions are scanned by the MS repeatedly during the GC run. The system includes a computer and appropriate software for data acquisition, data reduction, and data reporting. A 400 mL air sample is collected from the canister into the analytical system. The sample air is first passed through a Nafion® dryer, through the 6-port chromatographic valve, then routed into a cryogenic trap.

[Note: While the GC-multidetector analytical system does not employ a Nafion® dryer for drying the sample gas stream, it is used here because the GC/MS system utilizes a larger sample volume and is far more sensitive to excessive moisture than the GC-multidetector analytical system. Moisture can adversely affect detector precision. The Nafion® dryer also prevents freezing of moisture on the 0.32-mm I.D. column, which may cause column blockage and possible breakage.]

The trap is heated (–160°C to 120°C in 60 sec) and the analyte is injected onto the OV-1 capillary column (0.32-mm x 50-m).

[Note: Rapid heating of the trap provides efficient transfer of the sample components onto the gas chromatographic column.]

Upon sample injection unto the column, the MS computer is signaled by the GC computer to begin detection of compounds which elute from the column. The gas stream from the GC is scanned within a preselected range of atomic mass units (amu). For detection of compounds in Table 1, the range should be 18 to 250 amu, resulting in a 1.5 Hz repetition rate. Six (6) scans per eluting chromatographic peak are provided at this rate. The 10-15 largest peaks are chosen by an automated data reduction program, the three scans nearest the peak apex are averaged, and a background subtraction is performed. A library search is then performed and the top ten best matches for each peak are listed. A qualitative characterization of the sample is provided by this procedure. A typical chromatogram of VOCs determined by GC/MS/SCAN is illustrated in Figure 11(a).

10.1.1.2 A Nafion® permeable membrane dryer is used to remove water vapor selectively from the sample stream. The permeable membrane consists of Nafion® tubing (a copolymer of tetrafluoroethylene and fluorosulfonyl monomer) that is coaxially mounted within larger tubing. The sample stream is passed through the interior of the Nafion® tubing, allowing water (and other light, polar compounds) to permeate through the walls into the dry purge stream flowing through the annular space between the Nafion® and outer tubing.

[Note: To prevent excessive moisture build-up and any memory effects in the dryer, a clean-up procedure involving periodic heating of the dryer (100°C for 20 minutes) while purging with dry zero air (~500 mL/min) should be implemented as part of the user's SOP manual. The clean-up procedure is repeated during each analysis (7). Studies have indicated no substantial loss of targeted VOCs utilizing the above clean-up procedure (7). However, use of the cleanup procedure for compounds other than those on the TCL can lead to loss of sample integrity (19). This clean-up procedure is particularly useful when employing cryogenic preconcentration of VOCs with subsequent GC analysis using a 0.32-mm I.D. column because excess accumulated water can cause trap and column blockage and also adversely affect detector precision. In addition, the improvement in water removal from the sampling stream will allow analyses of much larger volumes of sample air in the event that greater system sensitivity is required for targeted compounds.]

10.1.1.3 The packed metal tubing used for reducing temperature trapping of VOCs is shown in Figure 12. The cooling unit is comprised of a 0.32-cm outside diameter (O.D.) nickel tubing loop packed with 60-80 mesh Pyrex® beads, Nutech Model 320-01, or equivalent. The nickel tubing loop is wound onto a cylindrically formed tube heater (~250 watt). A cartridge heater (~25 watt) is sandwiched between pieces of aluminum plate at the trap inlet and outlet to provide additional heat to eliminate cold spots in the transfer tubing. During operation, the trap is inside a two-section stainless steel shell which is well insulated. Rapid heating (–150 to +100°C in 55 s) is accomplished by direct thermal contact between the heater and the trap tubing. Cooling is achieved by vaporization of the cryogen. In the shell, efficient cooling (+120 to –150°C in 225 s) is facilitated by confining the vaporized cryogen to the small open volume surrounding the trap assembly. The trap assembly and chromatographic valve are mounted on a baseplate fitted into the injection and auxiliary zones of the GC on an insulated pad directly above the column oven for most commercially available GC systems.

[Note: Alternative trap assembly and connection to the GC may be used depending on the user's requirements.]

The carrier gas line is connected to the injection end of the analytical column with a zero-dead-volume fitting that is usually held in the heated zone above the GC oven. A 15-cm x 15-cm x 24-cm aluminum box is fitted over the sample handling elements to complete the package. Vaporized cryogen is vented through the top of the box.

10.1.1.4 As an option, the analyst may wish to split the gas stream exiting the column with a low dead-volume tee, passing one-third of the sample gas (~1.0 mL/min) to the mass-selective detector and the remaining two-thirds (~2.0 mL/min) through an FID, as illustrated as an option in Figure 4. The use of the specific detector (MS/SCAN) coupled with the non-specific detector (FID) enables enhancement of data acquired from a single analysis. In particular, the FID provides the user:

- Semi-real time picture of the progress of the analytical scheme.
- Confirmation by the concurrent MS analysis of other labs that can provide only FID results.
- Ability to compare GC/FID with other analytical laboratories with only GC/FID capability.

10.1.2 GC/MS/SIM System.

10.1.2.1 The analytical system is comprised of a GC equipped with an OV-1 capillary column (0.32-mm x 50-m) and a mass-selective detector set in the SIM mode (see Figure 4). The GC/MS is set up for automatic, repetitive analysis. The system is programmed to acquire data for only the target compounds and to disregard all others. The sensitivity is 0.1 ppbv for a 250 mL air sample with analytical precision of about 5% relative standard deviation. Concentration of compounds based upon a previously installed calibration table is reported

by an automated data reduction program. A Nafion® dryer is also employed by this analytical system prior to cryogenic preconcentration; therefore, many polar compounds are not identified by this procedure.

10.1.2.2 SIM analysis is based on a combination of retention times and relative abundances of selected ions (see Table 2). These qualifiers are stored on the hard disk of the GC/MS computer and are applied for identification of each chromatographic peak. The retention time qualifier is determined to be ± 0.10 minute of the library retention time of the compound. The acceptance level for relative abundance is determined to be ± 15% of the expected abundance, except for vinyl chloride and methylene chloride, which is determined to be ± 25%. Three ions are measured for most of the forty compounds. When compound identification is made by the computer, any peak that fails any of the qualifying tests is flagged (e.g., with an *). All the data should be manually examined by the analyst to determine the reason for the flag and whether the compound should be reported as found. While this adds some subjective judgment to the analysis, computer-generated identification problems can be clarified by an experienced operator. Manual inspection of the quantitative results should also be performed to verify concentrations outside the expected range. A typical chromatogram of VOCs determined by GC/MS/SIM mode is illustrated in Figure 11(b).

10.1.3 GC-Multidetector (GC/FID/ECD) System with Optional PID.

10.1.3.1 The analytical system (see Figure 5) is comprised of a gas chromatograph equipped with a capillary column and electron capture and flame ionization detectors (see Figure 5). In typical operation, sample air from pressurized canisters is vented past the inlet to the analytical system from the canister at a flow rate of 75 mL/min. For analysis, only 35 mL/min of sample gas is used, while excess is vented to the atmosphere. Sub-ambient pressure canisters are connected directly to the inlet and air is pulled through a trap by a downstream vacuum. The sample gas stream is routed through a six port chromatographic valve and into the cryogenic trap for a total sample volume of 490 mL.

[Note: This represents a 14 minute sampling period at a rate of 35 mL/min.]

The trap (see Section 10.1.1.3) is cooled to -150°C by controlled release of a cryogen. VOCs are condensed on the trap surface while N_2, O_2, and other sample components are passed to the pump. After the organic compounds are concentrated, the valve is switched and the trap is heated. The revolatilized compounds are transported by helium carrier gas at a rate of 4 mL/min to the head of the Megabore® OV-1 capillary column (0.53-mm x 30-m). Since the column initial temperature is at -50°C, the VOCs are cryofocussed on the head of the column. Then, the oven temperature is programmed to increase and the VOCs in the carrier gas are chromatographically separated. The carrier gas containing the separated VOCs is then directed to two parallel detectors at a flow rate of 2 mL/min each. The detectors sense the presence of the speciated VOCs, and the response is recorded by either a strip chart recorder or a data processing unit.

10.1.3.2 Typical chromatograms of VOCs determined by the GC/FID/ECD analytical system are illustrated in Figures 11(c) and 11(d), respectively.

10.1.3.3 Helium is used as the carrier gas (~4 mL/min) to purge residual air from the trap at the end of the sampling phase and to carry the revolatilized VOCs through the Megabore® GC column. Moisture and organic impurities are removed from the helium gas stream by a chemical purifier installed in the GC (see Section 7.2.1.11). After exiting the OV-1 Megabore® column, the carrier gas stream is split to the two detectors at rates of ~2 mL/min each.

10.1.3.4 Gas scrubbers containing Drierite® or silica gel and 5A molecular sieve are used to remove moisture and organic impurities from the zero air, hydrogen, and nitrogen gas streams.

[Note: Purity of gas purifiers is checked prior to use by passing humid zero-air through the gas purifier and analyzing according to Section 11.2.2.]

10.1.3.5 All lines should be kept as short as practical. All tubing used for the system should be chromatographic grade stainless steel connected with stainless steel fittings. After assembly, the system should be checked for leaks according to manufacturer's specifications.

10.1.3.6 The FID burner air, hydrogen, nitrogen (make-up), and helium (carrier) flow rates should be set according to the manufacturer's instructions to obtain an optimal FID response while maintaining a stable flame throughout the analysis. Typical flow rates are: burner air, 450 mL/min; hydrogen, 30 mL/min; nitrogen, 30 mL/min; helium, 2 mL/min.

10.1.3.7 The ECD nitrogen make-up gas and helium carrier flow rates should be set according to manufacturer's instructions to obtain an optimal ECD response. Typical flow rates are: nitrogen, 76 mL/min and helium, 2 mL/min.

10.1.3.8 The GC/FID/ECD could be modified to include a PID (see Figure 6) for increased sensitivity (20). In the photoionization process, a molecule is ionized by ultraviolet light as follows: $R + hv \rightarrow R^+ + e-$, where R^+ is the ionized species and a photon is represented by hv, with energy less than or equal to the ionization potential of the molecule. Generally all species with an ionization potential less than the ionization energy of the lamp are detected. Because the ionization potential of all major components of air (O_2, N_2, CO, CO_2, and H_2O) is greater than the ionization energy of lamps in general use, they are not detected. The sensor is comprised of an argon-filled, ultraviolet (UV) light source where a portion of the organic vapors are ionized in the gas stream. A pair of electrodes are contained in a chamber adjacent to the sensor. When a potential gradient is established between the electrodes, any ions formed by the absorption of UV light are driven by the created electric field to the cathode, and the current (proportional to the organic vapor concentration) is measured. The PID is generally used for compounds having ionization potentials less than the ratings of the ultraviolet lamps. This detector is used for determination of most chlorinated and oxygenated hydrocarbons, aromatic compounds, and high molecular weight aliphatic compounds. Because the PID is insensitive to methane, ethane, carbon monoxide, carbon dioxide, and water vapor, it is an excellent detector. The electron volt rating is applied specifically to the wavelength of the most intense emission line of the lamp's output spectrum. Some compounds with ionization potentials above the amp rating can still be detected due to the presence of small quantities of more intense light. A typical system configuration associated with the GC/FID/ECD/PID is illustrated in Figure 6.

10.2 GC/MS/SCAN/SIM System Performance Criteria

10.2.1 GC/MS System Operation.

10.2.1.1 Prior to analysis, the GC/MS system is assembled and checked according to manufacturer's instructions.

10.2.1.2 Table 3.0 outlines general operating conditions for the GC/MS/SCAN/SIM system with optional FID.

10.2.1.3 The GC/MS system is first challenged with humid zero air (see Section 11.2.2).

10.2.1.4 The GC/MS and optional FID system is acceptable if it contains less than 0.2 ppbv of targeted VOCs.

10.2.2 Daily GC/MS Tuning (see Figure 13)

10.2.2.1 At the beginning of each day or prior to a calibration, the GC/MS system must be tuned to verify that acceptable performance criteria are achieved.

10.2.2.2 For tuning the GC/MS, a cylinder containing 4-bromofluorobenzene (4-BFB) is introduced via a sample loop valve injection system.

[Note: Some systems allow auto-tuning to facilitate this process.]

The key ions and ion abundance criteria that must be met are illustrated in Table 4. Analysis should not begin until all those criteria are met.

10.2.2.3 The GC/MS tuning standard could also be used to assess GC column performance (chromatographic check) and as an internal standard. Obtain a background correction mass spectra of 4-BFB and check that all key ions criteria are met. If the criteria are not achieved, the analyst must retune the mass spectrometer and repeat the test until all criteria are achieved.

10.2.2.4 The performance criteria must be achieved before any samples, blanks or standards are analyzed. If any key ion abundance observed for the daily 4-BFB mass tuning check differs by more than 10% absolute abundance from that observed during the previous daily tuning, the instrument must be retuned or the sample and/or calibration gases reanalyzed until the above condition is met.

10.2.3 GC/MS Calibration (see Figure 13)

[Note: Initial and routine calibration procedures are illustrated in Figure 13.]

10.2.3.1 Initial Calibration. Initially, a multipoint dynamic calibration (three levels plus humid zero air) is performed on the GC/MS system, before sample analysis, with the assistance of a calibration system (see Figure 8). The calibration system uses NIST traceable standards [containing a mixture of the targeted VOCs at nominal concentrations of 10 ppmv in nitrogen (see Section 8.2)] as working standards to be diluted with humid zero air. The contents of the working standard cylinder(s) are metered (~2 mL/min) into the heated mixing chamber where they are mixed with a 2-L/min humidified zero air gas stream to achieve a nominal 10 ppbv per compound calibration mixture (see Figure 8). This nominal 10 ppbv standard mixture is allowed to flow and equilibrate for a minimum of 30 minutes. After the equilibration period, the gas standard mixture is sampled and analyzed by the real-time GC/MS system [see Figure 8(a) and Section 7.2.1]. The results of the analyses are averaged, flow audits are performed on the mass flow meters and the calculated concentration compared to generated values. After the GC/MS is calibrated at three concentration levels, a second humid zero air sample is passed through the system and analyzed. The second humid zero air test is used to verify that the GC/MS system is certified clean (<0.2 ppbv of target compounds).

As an alternative, a multipoint humid static calibration (three levels plus zero humid air) can be performed on the GC/MS system. During the humid static calibration analyses, three (3) specially-treated canisters are filled each at a different concentration between 1-20 ppbv from the calibration manifold using a pump and mass flow control arrangement [see Figure 8(c)]. The canisters are then delivered to the GC/MS to serve as calibration standards. The canisters are analyzed by the MS in the SIM mode, each analyzed twice.

The expected retention time and ion abundance (see Table 2 and Table 5) are used to verify proper operation of the GC/MS system. A calibration response factor is determined for each analyte, as illustrated in Table 5, and the computer calibration table is updated with this information, as illustrated in Table 6. The relative standard deviation (RSD) of the response factors should be <30% for the curve to be acceptable. If the RSD is >30%, recalibration is required. The samples are calculated using the mean of the response factors.

10.2.3.2 Routine Calibration. The GC/MS system is calibrated daily (and before sample analysis) with a one-point calibration. The GC/MS system is calibrated either with the dynamic calibration procedure [see Figure 8(a)] or with a 6-L specially prepared passivated canister filled with humid calibration standards from the calibration manifold (see Section 10.2.3.2). After the single point calibration, the GC/MS analytical system is challenged with a humidified zero gas stream to insure the analytical system returns to specification (<0.2 ppbv of selective organics). The relative percent difference (RPD) of each response factor from the mean response factor of the initial calibration curve should be <30% for continued use of the mean response factors. If the RPD is >30%, recalibration is required.

10.3 GC/FID/ECD System Performance Criteria (With Optional PID System) [see Figure 14])

10.3.1 Humid Zero Air Certification

10.3.1.1 Before system calibration and sample analysis, the GC/FID/ECD analytical system is assembled and checked according to manufacturer's instructions.

10.3.1.2 The GC/FID/ECD system is first challenged with humid zero air (see Section 11.2.2) and monitored.

10.3.1.3 Analytical systems contaminated with <0.2 ppbv of targeted VOCs are acceptable.

10.3.2 GC Retention Time Windows Determination (see Table 7)

10.3.2.1 Before analysis can be performed, the retention time windows must be established for each analyte.

10.3.2.2 Make sure the GC system is within optimum operating conditions.

10.3.2.3 Make three injections of the standard containing all compounds for retention time window determination.

[Note: The retention time window must be established for each analyte every 72 hours during continuous operation.]

10.3.2.4 Calculate the standard deviation of the three absolute retention times for each single component standard. The retention window is defined as the mean plus or minus three times the standard deviation of the individual retention times for each standard. In those cases where the standard deviation for a particular standard is zero, the laboratory must substitute the standard deviation of a closely-eluting, similar compound to develop a valid retention time window.

10.3.2.5 The laboratory must calculate retention time windows for each standard (see Table 7) on each GC column, whenever a new GC column is installed or when major components of the GC are changed. The data must be noted and retained in a notebook by the laboratory as part of the user SOP and as a quality assurance check of the analytical system.

10.3.3 GC Calibration

[Note: Initial and routine calibration procedures are illustrated in Figure 14.]

10.3.3.1 Initial Calibration. Initially, a multipoint dynamic calibration (three levels plus humid zero air) is performed on the GC/FID/ECD system, before sample analysis, with the assistance of a calibration system (see Figure 8). The calibration system uses NIST traceable standards or [containing a mixture of the targeted VOCs at nominal concentrations of 10 ppmv in nitrogen (see Section 8.2)] as working standards to be diluted with humid zero air. The contents of the working standard cylinders are metered (2 mL/min) into the heated mixing chamber where they are mixed with a 2-L/min humidified zero air stream to achieve a nominal 10 ppbv per compound calibration mixture (see Figure 8). This nominal 10 ppbv standard mixture is allowed to flow and equilibrate for an appropriate amount of time. After the equilibration period, the gas standard mixture is sampled and analyzed by the GC/MS system [see Figure 8(a)]. The results of the analyses are averaged, flow audits are performed on the mass flow controllers used to generate the standards and the appropriate response factors (concentration/area counts) are calculated for each compound, as illustrated in Table 5. The relative standard deviation (RSD) of the response factors should be <30% for the curve to be acceptable. If the RSD is >30%, recalibration is required. The samples are calculated using the mean of the response factors.

[Note: GC/FIDs are linear in the 1-20 ppbv range and may not require repeated multipoint calibrations; whereas, the GC/ECD will require frequent linearity evaluation.]

Table 5 outlines typical calibration response factors and retention times for 40 VOCs. After the GC/FID/ECD is calibrated at the three concentration levels, a second humid zero air sample is passed through the system and analyzed. The second humid zero air test is used to verify that the GC/FID/ECD system is certified clean (<0.2 ppbv of target compounds).

10.3.3.2 Routine Calibration. A one point calibration is performed daily on the analytical system to verify the initial multipoint calibration (see Section 10.3.3.1). The analyzers (GC/FID/ECD) are calibrated (before sample analysis) using the static calibration procedures (see Section 10.2.3.2) involving pressurized gas cylinders containing low concentrations of the targeted VOCs (~10 ppbv) in nitrogen. After calibration, humid zero air is once again passed through the analytical system to verify residual VOCs are not present. The relative percent difference (RPD) of each response factor from the mean response factor of the initial calibration curve should be <30% for continued use of the mean response factors. If the RPD is >30%, recalibration is required.

10.3.4 GC/FID/ECD/PID System Performance Criteria

10.3.4.1 As an option, the user may wish to include a PID to assist in peak identification and increase sensitivity.

10.3.4.2 This analytical system has been used in U.S. Environmental Protection Agency's Urban Air Toxic Monitoring Program (UATMP).

10.3.4.3 Preparation of the GC/FID/ECD/PID analytical system is identical to the GC/FID/ECD system (see Section 10.3).

10.3.4.4 Table 8 outlines typical retention times (minutes) for selected organics using the GC/FID/ECD/PID analytical system.

10.4 Analytical Procedures

10.4.1 Canister Receipt

10.4.1.1 The overall condition of each sample canister is observed. Each canister should be received with an attached sample identification tag and FTDS. Complete the canister COC.

10.4.1.2 Each canister is recorded in the dedicated laboratory logbook. Also noted on the identification tag are date received and initials of recipient.

10.4.1.3 The pressure of the canister is checked by attaching a pressure gauge to the canister inlet. The canister valve is opened briefly and the pressure (kPa, psig) is recorded.

[Note: If pressure is <83 kPa (<12 psig), the user may wish to pressurize the canisters, as an option, with zero grade nitrogen up to 137 kPa (20 psig) to ensure that enough sample is available for analysis. However, pressurizing the canister can introduce additional error, increase the minimum detection limit (MDL), and is time consuming. The user should weigh these limitations as part of his program objectives before pressurizing.]

Final cylinder pressure is recorded on the canister FTDS (see Figure 10).

10.4.1.4 If the canister pressure is increased, a dilution factor (DF) is calculated and recorded on the sampling data sheet.

$$DF = \frac{Y_a}{X_a}$$

where:

X_a = canister pressure absolute before dilution, kPa, psia.
Y_a = canister pressure absolute after dilution, kPa, psia.

After sample analysis, detected VOC concentrations are multiplied by the dilution factor to determine concentration in the sampled air.

10.4.2 GC/MS/SCAN Analysis (With Optional FID System)

10.4.2.1 The analytical system should be properly assembled, humid zero air certified (see Section 11.3), operated (see Table 3), and calibrated for accurate VOC determination.

10.4.2.2 The mass flow controllers are checked and adjusted to provide correct flow rates for the system.

10.4.2.3 The sample canister is connected to the inlet of the GC/MS/SCAN (with optional FID) analytical system. For pressurized samples, a mass flow controller is placed on the canister and the canister valve is opened and the canister flow is vented past a tee inlet to the analytical system at a flow of 75 mL/min so that 35 mL/min is pulled through the Nafion® dryer to the six-port chromatographic valve.

[Note: Flow rate is not as important as acquiring sufficient sample volume.]

Sub-ambient pressure samples are connected directly to the inlet.

10.4.2.4 The GC oven and cryogenic trap (inject position) are cooled to their set points of -50°C and -150°C, respectively.

10.4.2.5 As soon as the cryogenic trap reaches its lower set point of -150°C, the six-port chromatographic valve is turned to its fill position to initiate sample collection.

10.4.2.6 A 10 minute collection period of canister sample is utilized.

[Note: 40 mL/min x 10 min = 400 mL sampled canister contents.]

10.4.2.7 After the sample is preconcentrated in the cryogenic trap, the GC sampling valve is cycled to the inject position and the cryogenic trap is heated. The trapped analytes are thermally desorbed onto the head of the OV-1 capillary column (0.31-mm I.D. x 50-m length). The GC oven is programmed to start at -50°C and after 2 min to heat to 150°C at a rate of 8°C per minute.

10.4.2.8 Upon sample injection onto the column, the MS is signaled by the computer to scan the eluting carrier gas from 18 to 250 amu, resulting in a 1.5 Hz repetition rate. This corresponds to about 6 scans per eluting chromatographic peak.

10.4.2.9 Primary identification is based upon retention time and relative abundance of eluting ions as compared to the spectral library stored on the hard disk of the GC/MS data computer.

10.4.2.10 The concentration (ppbv) is calculated using the previously established response factors (see Section 10.2.3.2), as illustrated in Table 5.

[Note: If the canister is diluted before analysis, an appropriate multiplier is applied to correct for the volume dilution of the canister (see Section 10.4.1.4).]

10.4.2.11 The optional FID trace allows the analyst to record the progress of the analysis.

10.4.3 GC/MS/SIM Analysis (With Optional FID System).

10.4.3.1 When the MS is placed in the SIM mode of operation, the MS monitors only preselected ions, rather than scanning all masses continuously between two mass limits.

10.4.3.2 As a result, increased sensitivity and improved quantitative analysis can be achieved.

10.4.3.3 Similar to the GC/MS/SCAN configuration, the GC/MC/SIM analysis is based on a combination of retention times and relative abundances of selected ions (see Table 2 and Table 5). These qualifiers are stored on the hard disk of the GC/MS computer and are applied for identification of each chromatographic peak. Once the GC/MS/SIM has identified the peak, a calibration response factor is used to determine the analyte's concentration.

10.4.3.4 The individual analyses are handled in three phases: data acquisition, data reduction, and data reporting. The data acquisition software is set in the SIM mode, where specific compound fragments are monitored by the MS at specific times in the analytical run. Data reduction is coordinated by the postprocessing macro program that is automatically accessed after data acquisition is completed at the end of the GC run. Resulting ion profiles are extracted, peaks are identified and integrated, and an internal integration report is generated by the program. A reconstructed ion chromatogram for hardcopy reference is prepared by the program and various parameters of interest such as time, date, and integration constants are printed. At the completion of the macro program, the data reporting software is accessed. The appropriate calibration table (see Table 9) is retrieved by the data reporting program from the computer's hard disk storage and the proper retention time and response factor parameters are applied to the macro program's integration file. With reference to certain pre-set acceptance criteria, peaks are automatically identified and quantified and a final summary report is prepared, as illustrated in Table 10.

10.4.4 GC/FID/ECD Analysis (With Optional PID System)

10.4.4.1 The analytical system should be properly assembled, humid zero air certified (see Section 12.2) and calibrated through a dynamic standard calibration procedure (see Section 10.3.2). The FID detector is lit and allowed to stabilize.

10.4.4.2 Sixty-four minutes are required for each sample analysis: 15 min for system initialization, 14 min for sample collection, 30 min for analysis, and 5 min for post-time, during which a report is printed.

[Note: This may vary depending upon system configuration and programming.]

10.4.4.3 The helium and sample mass flow controllers are checked and adjusted to provide correct flow rates for the system. Helium is used to purge residual air from the trap at the end of the sampling phase and to carry the revolatilized VOCs from the trap onto the GC column and into the FID/ECD. The hydrogen, burner air, and nitrogen flow rates should also be checked. The cryogenic trap is connected and verified to be operating properly while flowing cryogen through the system.

10.4.4.4 The sample canister is connected to the inlet of the GC/FID/ECD analytical system. The canister valve is opened and the canister flow is vented past a tee inlet to the analytical system at 75 mL/min using a mass flow controller. During analysis, 35 mL/min of sample gas is pulled through the six-port chromatographic valve and routed through the trap at the appropriate time while the extra sample is vented. The VOCs are condensed in the trap while the excess flow is exhausted through an exhaust vent, which assures that the sample air flowing through the trap is at atmospheric pressure.

10.4.4.5 The six-port valve is switched to the inject position and the canister valve is closed.

10.4.4.6 The electronic integrator is started.

10.4.4.7 After the sample is preconcentrated on the trap, the trap is heated and the VOCs are thermally desorbed onto the head of the capillary column. Since the column is at -50°C, the VOCs are cryofocussed on the

column. Then, the oven temperature (programmed) increases and the VOCs elute from the column to the parallel FID/ECD assembly.

10.4.4.8 The peaks eluting from the detectors are identified by retention time (see Table 7 and Table 8), while peak areas are recorded in area counts. Typical response of the FID and ECD, respectively, for the forty (40) targeted VOCs identified in Compendium Method TO-14A are illustrated in Figures 15 and 16, respectively.

[Note: Refer to Table 7 for peak number and identification.]

10.4.4.9 The response factors (see Section 10.3.3.1) are multiplied by the area counts for each peak to calculate ppbv estimates for the unknown sample. If the canister is diluted before analysis, an appropriate dilution multiplier (DF) is applied to correct for the volume dilution of the canister (see Section 10.4.1.4).

10.4.4.10 Each canister is analyzed twice and the final concentrations for each analyte are the averages of the two analyses.

10.4.4.11 However, if the GC/FID/ECD analysis shows unexpected peaks which need further identification and attention or overlapping peaks are discovered, eliminating possible quantitation, the sample should then be subjected to a GC/MS/SCAN for positive identification and quantitation.

11. Cleaning and Certification Program

11.1 Canister Cleaning and Certification

11.1.1 All canisters must be clean and free of any contaminants before sample collection.

11.1.2 All canisters are leak tested by pressurizing them to approximately 206 kPa (~30 psig) with zero air.

[Note: The canister cleaning system in Figure 7 can be used for this task. The initial pressure is measured, the canister value is closed, and the final pressure is checked after 24 hours. If leak tight, the pressure should not vary more than ± 13.8 kPa (± 2 psig) over the 24 hour period.]

11.1.3 A canister cleaning system may be assembled as illustrated in Figure 7. Cryogen is added to both the vacuum pump and zero air supply traps. The canister(s) are connected to the manifold. The vent shut-off valve and the canister valve(s) are opened to release any remaining pressure in the canister(s). The vacuum pump is started and the vent shut-off valve is then closed and the vacuum shut-off valve is opened. The canister(s) are evacuated to <0.05 mm Hg (for at least one hour).

[Note: On a daily basis or more often if necessary, the cryogenic traps should be purged with zero air to remove any trapped water from previous canister cleaning cycles.]

11.1.4 The vacuum and vacuum/pressure gauge shut-off valves are closed and the zero air shut-off valve is opened to pressurize the canister(s) with humid zero air to approximately 206 kPa (~30 psig). If a zero gas generator system is used, the flow rate may need to be limited to maintain the zero air quality.

11.1.5 The zero shut-off valve is closed and the canister(s) is allowed to vent down to atmospheric pressure through the vent shut-off valve. The vent shut-off valve is closed. Repeat Sections 11.1.3 through 11.1.5 two additional times for a total of three (3) evacuation/pressurization cycles for each set of canisters.

11.1.6 At the end of the evacuation/pressurization cycle, the canister is pressurized to 206 kPa (30 psig) with humid zero air. The canister is then analyzed by a GC/MS or GC/FID/ECD analytical system. Any canister that has not tested clean (compared to direct analysis of humidified zero air of <0.2 ppbv of targeted VOCs) should not be used. As a "blank" check of the canister(s) and cleanup procedure, the final humid zero air fill of 100% of the canisters is analyzed until the cleanup system and canisters are proven reliable (<0.2 ppbv of targeted VOCs). The check can then be reduced to a lower percentage of canisters.

11.1.7 The canister is reattached to the cleaning manifold and is then reevacuated to <0.05 mm Hg and remains in this condition until used. The canister valve is closed. The canister is removed from the cleaning system and the canister connection is capped with a stainless steel fitting. The canister is now ready for collection of an air sample. An identification tag is attached to the neck of each canister for field notes and chain-of-custody purposes.

11.1.8 As an option to the humid zero air cleaning procedures, the canisters could be heated in an isothermal oven to 100°C during the procedure described in Section 11.1.3 to assist in removing less volatile VOCs from the walls of the canister.

[Note: Do not heat the values of the canister during this sequence.]

Once heated, the canisters are evacuated to 0.05 mm Hg. At the end of the heated/evacuated cycle, the canisters are pressurized with humid zero air and analyzed by the GC/FID/ECD system. Any canister that has not tested clean (<0.2 ppbv of targeted compounds) should not be used. Once tested clean, the canisters are reevacuated to 0.05 mm Hg and remain in the evacuated state until used.

11.2 Sampling System Cleaning and Certification

11.2.1 Cleaning Sampling System Components

11.2.1.1 Sample components are disassembled and cleaned before the sampler is assembled. Nonmetallic parts are rinsed with HPLC grade deionized water and dried in a vacuum oven at 50˚C. Typically, stainless steel parts and fittings are cleaned by placing them in a beaker of methanol in an ultrasonic bath for 15 minutes. This procedure is repeated with hexane as the solvent.

11.2.1.2 The parts are then rinsed with HPLC grade deionized water and dried in a vacuum oven at 100°C for 12 to 24 hours.

11.2.1.3 Once the sampler is assembled, the entire system is purged with humid zero air for 24 hours.

11.2.2 Humid Zero Air Certification

[Note: In the following sections, "certification" is defined as evaluating the sampling system with humid zero air and humid calibration gases that pass through all active components of the sampling system. The system is "certified" if no significant additions or deletions (<0.2 ppbv of targeted compounds) have occurred when challenged with the test gas stream.]

11.2.2.1 The cleanliness of the sampling system is determined by testing the sampler with humid zero air without an evacuated gas cylinder, as follows.

11.2.2.2 The calibration system and manifold are assembled, as illustrated in Figure 8. The sampler (without an evacuated gas cylinder) is connected to the manifold and the zero air cylinder activated to generate a humid gas stream (~2 L/min) to the calibration manifold [see Figure 8(b)].

11.2.2.3 The humid zero gas stream passes through the calibration manifold, through the sampling system (without an evacuated canister) to a GC/FID/ECD analytical system at 75 mL/min so that 35 mL/min is pulled

through the six-port valve and routed through the cryogenic trap (see Section 10.2.2.1) at the appropriate time while the extra sample is vented.

[Note: The exit of the sampling system (without the canister) replaces the canister in Figure 4.]

After the sample (~400 mL) is preconcentrated on the trap, the trap is heated and the VOCs are thermally desorbed onto the head of the capillary column. Since the column is at -50°C, the VOCs are cryofocussed on the column. Then, the oven temperature (programmed) increases and the VOCs begin to elute and are detected by a GC/MS (see Section 10.2) or the GC/FID/ECD (see Section 10.3). The analytical system should not detect greater than 0.2 ppbv of targeted VOCs in order for the sampling system to pass the humid zero air certification test. Chromatograms of a certified sampler and contaminated sampler are illustrated in Figures 17(a) and (b), respectively. If the sampler passes the humid zero air test, it is then tested with humid calibration gas standards containing selected VOCs at concentration levels expected in field sampling (e.g., ~0.5 to 2 ppbv) as outlined in Section 11.2.3.

11.2.3 Sampler System Certification with Humid Calibration Gas Standards.

11.2.3.1 Assemble the dynamic calibration system and manifold as illustrated in Figure 8.

11.2.3.2 Verify that the calibration system is clean (less than 0.2 ppbv of targeted compounds) by sampling a humidified gas stream, *without* gas calibration standards, with a previously certified clean canister (see Section 12.1).

11.2.3.3 The assembled dynamic calibration system is certified clean if <0.2 ppbv of targeted compounds are found.

11.2.3.4 For generating the humidified calibration standards, the calibration gas cylinder(s) (see Section 8.2) containing nominal concentrations of 10 ppmv in nitrogen of selected VOCs, are attached to the calibration system, as outlined in Section 10.2.3.1. The gas cylinders are opened and the gas mixtures are passed through 0 to 10 mL/min certified mass flow controllers and blended with humidified zero air to generate ppbv levels of calibration standards.

11.2.3.5 After the appropriate equilibrium period, attach the sampling system (containing a certified evacuated canister) to the manifold, as illustrated in Figure 8(a).

11.2.3.6 Sample the dynamic calibration gas stream with the sampling system according to Section 9.2.1.

[Note: To conserve generated calibration gas, bypass the canister sampling system manifold and attach the sampling system to the calibration gas stream at the inlet of the in-line filter of the sampling system so the flow will be less than 500 mL/min.]

11.2.3.7 Concurrent with the sampling system operation, realtime monitoring of the calibration gas stream is accomplished by the on-line GC/MS or GC-multidetector analytical system [Figure 8(b)] to provide reference concentrations of generated VOCs.

11.2.3.8 At the end of the sampling period (normally same time period used for anticipated sampling), the sampling system canister is analyzed and compared to the reference GC/MS or GC-multi-detector analytical system to determine if the concentration of the targeted VOCs was increased or decreased by the sampling system.

11.2.3.9 A recovery of between 90% and 110% is expected for all targeted VOCs.

12. Performance Criteria and Quality Assurance

12.1 Standard Operating Procedures (SOPs)

12.1.1 SOPs should be generated in each laboratory describing and documenting the following activities: (1) assembly, calibration, leak check, and operation of specific sampling systems and equipment used; (2) preparation, storage, shipment, and handling of samples; (3) assembly, leak-check, calibration, and operation of the analytical system, addressing the specific equipment used; (4) canister storage and cleaning; and (5) all aspects of data recording and processing, including lists of computer hardware and software used.

12.1.2 Specific stepwise instructions should be provided in the SOPs and should be readily available to and understood by the laboratory personnel conducting the work.

12.2 Method Relative Accuracy and Linearity

12.2.1 Accuracy can be determined by injecting VOC standards (see Section 8.2) from an audit cylinder into a sampler. The contents are then analyzed for the components contained in the audit canister. Percent relative accuracy is calculated:

$$\% \text{ Relative Accuracy} = \frac{X - Y}{X} \times 100$$

where:

Y = concentration of the targeted compound recovered from sampler, ppbv.
X = concentration of VOC targeted compounds in the NIST-SRM audit cylinders, ppbv.

12.2.2 If the relative accuracy does not fall between 90 and 110 percent, the field sampler should be removed from use, cleaned, and recertified according to initial certification procedures outlined in Sections 11.2.2 and 11.2.3. Historically, concentrations of carbon tetrochloride, tetrachloroethylene, and hexachlorobutadiene have sometimes been detected at lower concentrations when using parallel ECD and FID detectors. When these three compounds are present at concentrations close to calibration levels, both detectors usually agree on the reported concentrations. At concentrations below 4 ppbv, there is a problem with nonlinearity of the ECD. Plots of concentration versus peak area for calibration compounds detected by the ECD have shown that the curves are nonlinear for carbon tetrachloride, tetrachloroethylene, and hexachlorobutadiene, as illustrated in Figures 18(a) through 18(c). Other targeted ECD and FID compounds scaled linearly for the range 0 to 8 ppbv, as shown for chloroform in Figure 18(d). For compounds that are not linear over the calibration range, area counts generally roll off between 3 and 4 ppbv. To correct for the nonlinearity of these compounds, an additional calibration step is performed. An evacuated stainless steel canister is pressurized with calibration gas a nominal concentration of 8 ppbv. The sample is then diluted to approximately 3.5 ppbv with zero air and analyzed. The instrument response factor (ppbv/area) of the ECD for each of the three compounds is calculated for the 3.5 ppbv sample. Then, both the 3.5 ppbv and the 8 ppbv response factors are entered into the ECD calibration table. Most commercial analytical systems have software designed to accommodate multilevel calibration entries, so the correct response factors are automatically calculated for concentrations in this range.

12.3 Method Modification

12.3.1 Sampling

12.3.1.1 The sampling system for pressurized canister sampling could be modified to use a lighter, more compact pump. The pump currently being used weights about 16 kilograms (~35 lbs). Commercially available pumps that could be used as alternatives to the prescribed sampler pump are described below. Metal Bellow MB-

41 pump: These pumps are cleaned at the factory; however, some precaution should be taken with the circular (~4.8 cm diameter) Teflon® and stainless steel part directly under the flange. It is often dirty when received and should be cleaned before use. This part is cleaned by removing it from the pump, manually cleaning with deionized water, and placing in a vacuum oven at 100°C for at least 12 hours. Exposed parts of the pump head are also cleaned with swabs and allowed to air dry. These pumps have proven to be very reliable; however, they are only useful up to an outlet pressure of about 137 kPa (~20 psig). Neuberger Pump: Viton gaskets or seals must be specified with this pump. The "factory direct" pump is received contaminated and leaky. The pump is cleaned by disassembling the pump head (which consists of three stainless steel parts and two gaskets), cleaning the gaskets with deionized water and drying in a vacuum oven, and remachining (or manually lapping) the sealing surfaces of the stainless steel parts. The stainless steel parts are then cleaned with methanol, hexane, deionized water and heated in a vacuum oven. The cause for most of the problems with this pump has been scratches on the metal parts of the pump head. Once this rework procedure is performed, the pump is considered clean and can be used up to about 240 kPa (~35 psig) output pressure. This pump is utilized in the sampling system illustrated in Figure 3.

12.3.1.2 Alternative Sampler Configuration. The sampling system described in Compendium Method TO-14A can be modified as described in Appendix C (see Figure C-1). Originally, this configuration was used in EPA's FY-88 Urban Air Toxics Pollutant Program.

12.3.2 Analysis.

12.3.2.1 Inlet tubing from the calibration manifold could be heated to 50°C (same temperature as the calibration manifold) to prevent condensation on the internal walls of the system.

12.3.2.2 The analytical strategy for Method TO-14A involves positive identification and quantitation by GC/MS/SCAN/SIM mode of operation with optional FID. This is a highly specific and sensitive detection technique. Because a specific detector system (GC/MS/SCAN/SIM) is more complicated and expensive than the use of non-specific detectors (GC/FID/ECD/PID), the analyst may want to perform a screening analysis and preliminary quantitation of VOC species in the sample, including any polar compounds, by utilizing the GC-multidetector (GC/FID/ECD/PID) analytical system prior to GC/MS analysis. This system can be used for approximate quantitation. The GC/FID/ECD/PID provides a "snap-shot" of the constituents in the sample, allowing the analyst to determine:

- Extent of misidentification due to overlapping peaks.
- Whether the constituents are within the calibration range of the anticipated GC/MS/SCAN/SIM analysis or does the sample require further dilution.
- Are there unexpected peaks which need further identification through GC/MS/SCAN or are there peaks of interest needing attention?

If unusual peaks are observed from the GC/FID/ECD/PID system, the analyst then performs a GC/MS/SCAN analysis. The GC/MS/SCAN will provide positive identification of suspect peaks from the GC/FID/ECD/PID system. If no unusual peaks are identified and only a select number of VOCs are of concern, the analyst can then proceed to GC/MS/SIM. The GC/MS/SIM is used for final quantitation of selected VOCs. Polar compounds, however, cannot be identified by the GC/MS/SIM due to the use of a Nafion® dryer to remove water from the sample prior to analysis. The dryer removes polar compounds along with the water. The analyst often has to make this decision incorporating project objectives, detection limits, equipment availability, cost and personnel capability in developing an analytical strategy. The use of the GC/FID/ECD/PID as a "screening" approach, with the GC/MS/SCAN/SIM for final identification and quantitation, is outlined in Figure 20.

12.4 Method Safety

This procedure may involve hazardous materials, operations, and equipment. This method does not purport to address all of the safety problems associated with its use. It is the user's responsibility to establish appropriate safety and health practices and determine the applicability of regulatory limitation prior to the implementation of this procedure. This should be part of the user's SOP manual.

12.5 Quality Assurance (see Figure 21)

12.5.1 Sampling System

12.5.1.1 Section 9.2 suggests that a portable GC system be used as a "screening analysis" prior to locating fixed-site samplers (pressurized or subatmospheric).

12.5.1.2 Section 9.2 requires pre and post-sampling measurements with a certified mass flow controller for flow verification of sampling system.

12.5.1.3 Section 11.1 requires all canisters to be pressure tested to 207 kPa ± 14 kPa (30 psig ± 2 psig) over a period of 24 hours.

12.5.1.4 Section 11.1 requires that all canisters be certified clean (<0.2 ppbv of targeted VOCs) through a humid zero air certification program.

12.5.1.5 Section 11.2.2 requires all field sampling systems to be certified initially clean (<0.2 ppbv of targeted VOCs) through a humid zero air certification program.

12.5.1.6 Section 11.2.3 requires all field sampling systems to pass an initial humidified calibration gas certification [at VOC concentration levels expected in the field (e.g., 0.5 to 2 ppbv)] with a percent recovery of greater than 90.

12.5.2 GC/MS/SCAN/SIM System Performance Criteria

12.5.2.1 Section 10.2.1 requires the GC/MS analytical system to be certified clean (<0.2 ppbv of targeted VOCs) prior to sample analysis, through a humid zero air certification.

12.5.2.2 Section 10.2.2 requires the daily tuning of the GC/MS with 4-BFB and that it meet the key ions and ion abundance criteria (10%) outlined in Table 5.

12.5.2.3 Section 10.2.3 requires both an initial multipoint humid static calibration (three levels plus humid zero air) and a daily calibration (one point) of the GC/MS analytical system.

12.5.3 GC-Multidetector System Performance Criteria

12.5.3.1 Section 10.3.1 requires the GC/FID/ECD analytical system, prior to analysis, to be certified clean (<0.2 ppbv of targeted VOCs) through a humid zero air certification.

12.5.3.2 Section 10.3.2 requires that the GC/FID/ECD analytical system establish retention time windows for each analyte prior to sample analysis, when a new GC column is installed, or major components of the GC system altered since the previous determination.

12.5.3.3 Section 8.2 requires that all calibration gases be traceable to NIST-SRMs.

12.5.3.4 Section 10.3.2 requires that the retention time window be established throughout the course of a 72-hr analytical period.

12.5.3.5 Section 10.3.3 requires both an initial multipoint calibration (three levels plus humid zero air) and a daily calibration (one point) of the GC/FID/ECD analytical system with zero gas dilution of NIST traceable gases.

13. Acknowledgements

The determination of VOCs in ambient air is a complex task, primarily because of the wide variety of compounds of interest and the lack of standardized sampling and analytical procedures. While there are numerous procedures for sampling and analyzing VOCs in ambient air, this method draws upon the best aspects of each one and combines them into a standardized methodology. In many cases, the individuals listed in the acknowledgement table contributed to the research, documentation and peer review of the original Compendium Method TO-14 and now revised as Compendium Method TO-14A. In some cases, new names appear as likely sources of new information.

14. References

1. Oliver, K. D., Pleil, J. D., and McClenny, W. A. "Sample Integrity of Trace Level Volatile Organic Compounds in Ambient Air Stored in Specially Prepared Polished Canisters," *Atmos. Environ.* 20:1403, 1986.

2. Holdren, M. W. and Smith, D. L. "Stability of Volatile Organic Compounds While Stored in Specially Prepared Polished Stainless Steel Canisters," U. S. Environmental Protection Agency, Research Triangle Park, NC, Final Report, EPA Contract No. 68-02-4127, Battelle, January 1986.

3. Kelly, T. J. and Holdren, M. W., "Applicability of Canisters for Sample Storage in the Determination of Hazardous Air Pollutants," *Atmos. Environ.*, 29(19):2595, 1995.

4. McClenny, W. A., Pleil, J. D., Evans, G. F., Oliver, K. D., Holdren, M. W., and Winberry, W. T., "Canister-Based Method for Monitoring Toxic VOCs in Ambient Air," *JAWMA*, 41(10):1038, 1991.

5. McClenny, W. A., Pleil, J. D., Holdren, J. W., and Smith, R. N. "Automated Cryogenic Preconcentration and Gas Chromatographic Determination of Volatile Organic Compounds," *Anal. Chem.* 56:2947, 1984.

6. Pleil, J. D., Oliver, K. D., and McClenny, W. A., "Enhanced Performance of Nafion® Dryers in Removing Water from Samples Prior to Gas Chromatographic Analysis," *JAPCA*, 37:244, 1987.

7. Oliver, K. D. and Pleil, J. D., "Automated Cryogenic Sampling and Gas Chromatographic Analysis of Ambient Vapor-Phase Organic Compounds: Procedures and Comparison Tests," ManTech, Inc. - Environmental Services, EPA Contract No. 68-02-4035, U. S. Environmental Protection Agency, Research Triangle Park, NC,

COMPENDIUM METHOD TO-14A ACKNOWLEDGEMENT

Topic	Contact	Address	Telephone No.
Sampling System	Mr. Frank McElroy	U.S. Environmental Protection Agency National Exposure Research Laboratory MD-77 Research Triangle Park, NC 27711	919-541-2622
	Dr. Bill McClenny Mr. Joachim Pleil	U.S. Environmental Protection Agency National Exposure Research Laboratory MD-44 Research Triangle Park, NC 27711	919-541-3158 919-541-4680
	Mr. Bill Taylor	Graseby 500 Technology Ct. Smyrna, GA 30082	1-800-241-6898
	Mr. Joseph P. Krasnec	Scientific Instrumentation Specialists, Inc. P.O. Box 8941 Moscow, Idaho 83843	208-882-3860
Analytical System			
GC/FID, GC/FID/ECD	Dr. Bill McClenny Mr. Joachim Pleil	U.S. Environmental Protection Agency National Exposure Research Laboratory MD-44 Research Triangle Park, NC 27711	919-541-3158 919-541-4680
	Ms. Karen D. Oliver	ManTech, Inc. Environmental Sciences P.O. Box 12313 Research Triangle Park, NC 27709	919-549-0611
GC/FID, GC/FID/ECD/PID	Mr. Dave-Paul Dayton Ms. JoAnn Rice	ERG P.O. Box 13000 Progress Center Research Triangle Park, NC 27709	919-481-0212
GC/MS/SCAN/SIM	Dr. Bill McClenny Mr. Joachim Pleil	U.S. Environmental Protection Agency National Exposure Research Laboratory MD-44 Research Triangle Park, NC 27711	919-541-3158 919-541-4680
Canister Cleaning Certification and VOC Canister Storage Stability	Dr. Bill McClenny Mr. Joachim Pleil	U.S. Environmental Protection Agency National Exposure Research Laboratory MD-44 Research Triangle Park, NC 27711	919-541-3158 919-541-4680
	Mr. Dave-Paul Dayton Ms. JoAnn Rice	ERG P.O. Box 13000 Progress Center Research Triangle Park, NC 27709	919-481-0212
	Dr. R.K.M. Jayanty	Research Triangle Institute P.O. Box 12194 Research Triangle Park, NC 27709	919-541-6000
Cryogenic Sampling Unit	Dr. Bill McClenny Mr. Joachim Pleil	U.S. Environmental Protection Agency National Exposure Research Laboratory MD-44 Research Triangle Park, NC 27711	919-541-3158 919-541-4680
U.S. EPA Audit Gas Standards	Mr. Howard Christ	U.S. Environmental Protection Agency National Exposure Research Laboratory MD-77B Research Triangle Park, NC 27711	919-541-4531

1985.

8. McClenny, W. A. and Pleil, J. D., "Automated Calibration and Analysis of VOCs with a Capillary Column Gas Chromatograph Equipped for Reduced Temperature Trapping," in *Proceedings of the 1984 Air Pollution Control Association Annual Meeting*, San Francisco, CA, June 24-29, 1984.

9. McClenny, W. A., Pleil, J. D., Lumpkin, T. A., and Oliver, K. D., "Update on Canister-Based Samplers for VOCs," in *Proceedings of the 1987 EPA/APCA Symposium on Measurement of Toxic and Related Air Pollutants*, May 1987.

10. Pleil, J. D., "Automated Cryogenic Sampling and Gas Chromatographic Analysis of Ambient Vapor-Phase Organic Compounds: System Design," ManTech, Inc. - Environmental Services, U. S. Environmental Protection Agency, Research Triangle Park, NC, 1982, EPA Contract No. 68-02-2566.

11. Oliver, K. D. and Pleil, J. D., "Analysis of Canister Samples Collected During the CARB Study in August 1986," U. S. Environmental Protection Agency, Research Triangle Park, NC, ManTech, Inc. - Environmental Services, 1987.

12. Pleil, J. D., and Oliver, K. D., "Measurement of Concentration Variability of Volatile Organic Compounds in Indoor Air: Automated Operation of a Sequential Syringe Sampler and Subsequent GC/MS Analysis," U. S. Environmental Protection Agency, Research Triangle Park, NC, ManTech, Inc. - Environmental Services, 1987.

13. Walling, J. F., "The Utility of Distributed Air Volume Sets When Sampling Ambient Air Using Solid Adsorbents," *Atmos. Environ.*, 18:855-859, 1984.

14. Walling, J. F., Bumgarner, J. E., Driscoll, J. D., Morris, C. M., Riley, A. E. and Wright, L. H., "Apparent Reaction Products Desorbed From Tenax Used to Sample Ambient Air," *Atmos. Environ*., 20:51-57, 1986.

15. Berkley, R. E., "Overview of Field Deployable Gas Chromatographic Analyzers of Airborne Toxic Organic Vapors," *Proceedings of the 1994 On-Site Analysis Conference*, Houston, TX, January 24-26, 1994.

16. McElroy, F. F., Thompson, V. L., Holland, D. M., Lonneman, W. A., and Seila, R. L., "Cryogenic Preconcentration-Direct FID Method for Measurement of Ambient NMOC: Refinement and Comparison with GC Speciation," *JAPCA*, 35(6):710, 1986.

17. Rasmussen, R. A. and Lovelock, J. E., "Atmospheric Measurements Using Canister Technology," *J. Geophys. Res.*, 83:8369-8378, 1983.

18. Rasmussen, R. A. and Khalil, M. A. K., "Atmospheric Halocarbons: Measurements and Analysis of Selected Trace Gases," in *Proc. NATO ASI on Atmospheric Ozone*, BO: 209-231.

19. Dayton, D. D. and Rice, J., *Development and Evaluation of a Prototype Analytical System for Measuring Air Toxics*, U. S. Environmental Protection Agency, Research Triangle Park, NC 27711, EPA Contract No. 68-02-3889, WA No. 120, November 1987.

TABLE 1. COMPENDIUM METHOD TO-14A VOC TCL DATA SHEET

COMPOUND (SYNONYM)	FORMULA	MOLECULAR WEIGHT	BOILING POINT (°C)	MELTING POINT (°C)	CAS NO.
Freon 12 (Dichlorodifluoromethane)	Cl_2CF_2	120.91	-29.8	-158.0	75-71-8
Methyl chloride (Chloromethane)	CH_3Cl	50.49	-24.2	-97.1	74-87-3
Freon 114 (1,2-Dichloro-1,1,2,2-tetrafluoroethane)	$ClCF_2CClF_2$	170.93	4.1	-94.0	76-14-2
Vinyl chloride (Chloroethylene)	$CH_2=CHCl$	62.50	-13.4	-1538.0	75-01-4
Methyl bromide (Bromomethane)	CH_3Br	94.94	3.6	-93.6	74-83-9
Ethyl chloride (Chloroethane)	CH_3CH_2Cl	64.52	12.3	-136.4	75-00-3
Freon 11 (Trichlorofluoromethane)	CCl_3F	137.38	23.7	-111.0	75-69-4
Vinylidene chloride (1,1-Dichloroethene)	$C_2H_2Cl_2$	96.95	31.7	-122.5	75-35-4
Dichloromethane (Methylene chloride)	CH_2Cl_2	84.94	39.8	-95.1	75-09-2
Freon 113 (1,1,2-Trichloro-1,2,2-trifluoroethane)	CF_2ClCCl_2F	187.38	47.7	-36.4	76-13-1
1,1-Dichloroethane (Ethylidene chloride)	CH_3CHCl_2	98.96	57.3	-97.0	74-34-3
cis-1,2-Dichloroethylene	$CHCl=CHCl$	96.94	60.3	-80.5	156-59-2
Chloroform (Trichloromethane)	$CHCl_3$	119.38	61.7	-63.5	67-66-3
1,2-Dichloroethane (Ethylene dichloride)	$ClCH_2CH_2Cl$	98.96	83.5	-35.3	107-06-2
Methyl chloroform (1,1,1-Trichloroethane)	CH_3CCl_3	133.41	74.1	-30.4	71-55-6
Benzene (Cyclohexatriene)	C_6H_6	78.12	80.1	5.5	71-43-2
Carbon tetrachloride (Tetrachloromethane)	CCl_4	153.82	76.5	-23.0	56-23-5
1,2-Dichloropropane (Propylene dichloride)	$CH_3CHClCH_2Cl$	112.99	96.4	-100.4	78-87-5
Trichloroethylene (Trichloroethene)	$ClCH=CCl_2$	131.29	87	-73.0	79-01-6
cis-1,3-Dichloropropene (cis-1,3-dichloropropylene)	$CH_3CCl=CHCl$	110.97	104.3	---	542-75-6
trans-1,3-Dichloropropene (trans-1,3-Dichloropropylene)	$ClCH_2CH=CHCl$	110.97	112.0	---	542-75-6
1,1,2-Trichloroethane (Vinyl trichloride)	$CH_2ClCHCl_2$	133.41	113.8	-36.5	79-00-5
Toluene (Methyl benzene)	$C_6H_5CH_3$	92.15	110.6	-95.0	108-88-3
1,2-Dibromoethane (Ethylene dibromide)	$BrCH_2CH_2Br$	187.88	131.3	9.8	106-93-4
Tetrachloroethylene (Perchloroethylene)	$Cl_2C=CCl_2$	165.83	121.1	-19.0	127-18-4
Chlorobenzene (Phenyl chloride)	C_6H_5Cl	112.56	132.0	-45.6	108-90-7
Ethylbenzene	$C_6H_5C_2H_5$	106.17	136.2	-95.0	100-41-4
m-Xylene (1,3-Dimethylbenzene)	$1,3-(CH_3)_2C_6H_4$	106.17	139.1	-47.9	108-38-3
p-Xylene (,14-Dimethylxylene)	$1,4-(CH_3)_2C_6H_4$	106.17	138.3	13.3	106-42-3
Styrene (Vinyl benzene)	$C_6H_5CH=CH_2$	104.16	145.2	-30.6	100-42-5
1,1,2,2-Tetrachloroethane	$CHCl_2CHCl_2$	167.85	146.2	-36.0	79-34-5
o-Xylene (1,2-Dimethylbenzene)	$1,2-(CH_3)_2C_6H_4$	106.17	144.4	-25.2	95-47-6
1,3,5-Trimethylbenzene (Mesitylene)	$1,3,5-(CH_3)_3C_6H_6$	120.20	164.7	-44.7	108-67-8
1,2,4-Trimethylbenzene (Pseudocumene)	$1,2,4-(CH_3)_3C_6H_6$	120.20	169.3	-43.8	95-63-6
m-Dichlorobenzene (1,3-Dichlorobenzene)	$1,3-Cl_2C_6H_4$	147.01	173.0	-24.7	541-73-1
Benzyl chloride (α-Chlorotoluene)	$C_6H_5CH_2Cl$	126.59	179.3	-39.0	100-44-7
o-Dichlorobenzene (1,2-dichlorobenzene)	$1,2-Cl_2C_6H_4$	147.01	180.5	-17.0	95-50-1
p-Dichlorobenzene (1,4-dichlorobenzene)	$1,4-Cl_2C_6H_4$	147.01	174.0	53.1	106-46-7
1,2,4-Trichlorobenzene	$1,2,4-Cl_3C_6H_3$	181.45	213.5	17.0	120-82-1
Hexachlorobutadiene (1,1,2,3,4,4-Hexachloro-1,3-butadiene)	C_4Cl_6	260.8	186 (sublimes)	-21.0	87-68-3

TABLE 2. ION/ABUNDANCE AND EXPECTED RETENTION TIME FOR SELECTED COMPENDIUM METHOD TO-14A VOCs ANALYZED BY GC/MS/SIM

COMPOUND (SYNONYM)	Ion/Abundance (amu/% base peak)	Expected Retention Time (min)
Freon 12 (Dichlorodifluoromethane)	85/100 87/31	5.01
Methyl chloride (Chloromethane)	50/100 52/34	5.69
Freon 114 (1,2-Dichloro-1,1,2,2-tetrafluoroethane)	85/100 135/56 87/33	6.55
Vinyl chloride (Chloroethene)	62/100 27/125 64/32	6.71
Methyl bromide (Bromomethane)	94/100 96/85	7.83
Ethyl chloride (Chloroethane)	64/100 29/140 27/140	8.43
Freon 11 (Trichlorofluoromethane)	101/100 103/67	9.97
Vinylidene chloride (1,1-Dichloroethene)	61/100 96/55 63/31	10.93
Dichloromethane (Methylene chloride)	49/100 84/65 86/45	11.21
Freon 113 (1,1,2-Trichloro-1,2,2-trifluoroethane)	151/100 101/140 103/90	11.60
1,1-Dichloroethane (Ethylidene chloride)	63/100 27/64 65/33	12.50
cis-1,2-Dichloroethylene	61/100 96/60 98/44	13.40
Chloroform (Trichloromethane)	83/100 85/65 47/35	13.75
1,2-Dichloroethane (Ethylene dichloride)	62/100 27/70 64/31	14.39
Methyl chloroform (1,1,1-Trichloroethane)	97/100 99/64 61/61	14.62

TABLE 2. (continued)

COMPOUND (SYNONYM)	Ion/Abundance (amu/% base peak)	Expected Retention Time (min)
Benzene (Cyclohexatriene)	78/100 77/25 50/35	15.04
Carbon tetrachloride (Tetrachloromethane)	117/100 119/97	15.18
1,2-Dichloropropane (Propylene dichloride)	63/100 41/90 62/70	15.83
Trichloroethylene (Trichloroethene)	130/100 132/92 95/87	16.10
cis-1,3-Dichloropropene	75/100 39/70 77/30	16.96
trans-1,3-Dichloropropene (cis-1,3 Dichloropropylene)	75/100 39/70 77/30	17.49
1,1,2-Trichloroethane (Vinyl trichloride)	97/100 83/90 61/82	17.61
Toluene (Methyl benzene)	91/100 92/57	17.86
1,2-Dibromoethane (Ethylene dibromide)	107/100 109/96 27/115	18.48
Tetrachloroethylene (Perchloroethylene)	166/100 164/74 131/60	19.01
Chlorobenzene (Phenyl chloride)	112/100 77/62 114/32	19.73
Ethylbenzene	91/100 106/28	20.20
m,p-Xylene (1,3/1,4-Dimethylbenzene)	91/100 106/40	20.41
Styrene (Vinyl benzene)	104/100 78/60 103/49	20.81
1,1,2,2-Tetrachloroethane (Tetrachlorethane)	83/100 85/64	20.92
o-Xylene (1,2-Dimethylbenzene)	91/100 106/40	20.92
4-Ethyltoluene	105/100 120/29	22.53

TABLE 2. (continued)

COMPOUND (SYNONYM)	Ion/Abundance (amu/% base peak)	Expected Retention Time (min)
1,3,5-Trimethylbenzene (Mesitylene)	105/100 120/42	22.65
1,2,4-Trimethylbenzene (Pseudocumene)	105/100 120/42	23.18
m-Dichlorobenzene (1,3-Dichlorobenzene)	146/100 148/65 111/40	23.31
Benzyl chloride (α-Chlorotoluene)	91/100 126/26	23.32
p-Dichlorobenzene (1,4-dichlorobenzene)	146/100 148/65 111/40	23.41
o-Dichlorobenzene (1,2-dichlorobenzene)	146/100 148/65 111/40	23.88
1,2,4-Trichlorobenzene	180/100 182/98 184/30	26.71
Hexachlorobutadiene (1,1,2,3,4,4 Hexachloro-1,3-butadiene)	225/100 227/66 223/60	27.68

TABLE 3. GENERAL GC AND MS OPERATING CONDITIONS FOR COMPENDIUM METHOD TO-14A

Chromatography	
Column	General OV-1 crosslinked methyl silicone (50-m x 0.31-mm I.D., 17 um film thickness), or equivalent
Carrier Gas	Helium (~2.0 mL/min at 250ºC)
Injection Volume	Constant (1-3 µL)
Injection Mode	Splitless
Temperature Program	
Initial Column Temperature	-50°C
Initial Hold Time	2 min
Program	8°C/min to 150°C
Final Hold Time	15 min
Mass Spectrometer	
Mass Range	18 to 250 amu
Scan Time	1 sec/scan
EI Condition	70 eV
Mass Scan	Follow manufacturer's instruction for selecting mass selective detector (MS) and selected ion monitoring (SIM) mode
Detector Mode	Multiple ion detection
FID System (Optional)	
Hydrogen Flow	~30 mL/minute
Carrier Flow	~30 mL/minute
Burner Air	~400 mL/minute

TABLE 4. 4-BFB KEY IONS AND ION ABUNDANCE CRITERIA

Mass	Ion Abundance Criteria
50	15 to 40% of mass 95
75	30 to 60% of mass 95
95	Base Peak, 100% Relative Abundance
96	5 to 9% of mass 95
173	<2% of mass 174
174	>50% of mass 95
175	5 to 9% of mass 174
176	>95% but< 101% of mass 174
177	5 to 9% of mass 176

TABLE 5. COMPENDIUM METHOD TO-14A RESPONSE FACTORS (ppbv/area count) AND EXPECTED RETENTION TIME FOR GC/MS/SIM ANALYTICAL CONFIGURATION

Compounds	Response Factor (ppbv/area count)	Expected Retention Time (minutes)
Freon 12	0.6705	5.01
Methyl chloride	4.093	5.64
Freon 114	0.4928	6.55
Vinyl chloride	2.343	6.71
Methyl bromide	2.647	7.83
Ethyl chloride	2.954	8.43
Freon 11	0.5145	9.87
Vinylidene chloride	1.037	10.93
Dichloromethane	2.255	11.21
Trichlorotrifluoroethane	0.9031	11.60
1,1-Dichloroethane	1.273	12.50
cis-1,2-Dichloroethylene	1.363	13.40
Chloroform	0.7911	13.75
1,2-Dichloroethane	1.017	14.39
Methyl chloroform	0.7078	14.62
Benzene	1.236	15.04
Carbon tetrachloride	0.5880	15.18
1,2-Dichloropropane	2.400	15.83
Trichloroethylene	1.383	16.10
cis-1,3-Dichloropropene	1.877	16.96
trans-1,3-Dichloropropene	1.338	17.49
1.1,2-Trichloroethane	1.891	17.61
Toluene	0.9406	17.86
1,2-Dibromoethane (EDB)	0.8662	18.48
Tetrachloroethylene	0.7357	19.01
Chlorobenzene	0.8558	19.73
Ethylbenzene	0.6243	20.20
m,p-Xylene	0.7367	20.41
Styrene	1.888	20.80
1,1,2,2-Tetrachloroethane	1.035	20.92
o-Xylene	0.7498	20.92
4-Ethyltoluene	0.6181	22.53
1,3,5-Trimethylbenzene	0.7088	22.65
1,2,4-Trimethylbenzene	0.7536	23.18
m-Dichlorobenzene	0.9643	23.31
Benzyl chloride	1.420	23.32
p-Dichlorobenzene	0.8912	23.41
o-Dichlorobenzene	1.004	23.88
1,2,4-Trichlorobenzene	2.150	26.71
Hexachlorobutadiene	0.4117	27.68

TABLE 6. COMPENDIUM METHOD TO-14A
GC/MS/SIM CALIBRATION TABLE
*** External Standard ***

Operator: JDP 8 Jan 97 10:02 am
Sample Info: SYR 1
Misc Info:
Integration File Name: DATA:SYR2AO2A.I

Sequence Index: 1 Bottle Number: 2
Last Update: 8 Jan 87 8:13 am
Reference Peak Window: 5.00 Absolute Minutes
Non-Reference Peak Window: 0.40 Absolute Minutes
Sample Amount: 0.000 Uncalibrated Peak RF: 0.000 Multiplier: 1.667

Peak No.	Type	Int Type	Ret Time	Signal Description			Compound Name	Area	Amount	
1	1	PP	5.020	Mass	85.00	amu	FREON 12	12893	4011	pptv
2	1	PP	5.654	Mass	50.00	amu	METHYLCHLORI	4445	2586	pptv
3	1	BP	6.525	Mass	85.00	amu	FREON 114	7067	1215	pptv
4	1	PB	6.650	Mass	62.00	amu	VINYLCHLORID	2892	1929	pptv
5	1	BP	7.818	Mass	94.00	amu	METHYLBROMID	2401	1729	pptv
6	1	BB	8.421	Mass	64.00	amu	ETHYLCHLORID	2134	2769	pptv
7	1	BV	9.940	Mass	101.00	amu	FREON 11	25069	6460	pptv
8	1	BP	10.869	Mass	61.00	amu	VINDENECHLOR	5034	1700	pptv
9	1	BP	11.187	Mass	49.00	amu	DICHLOROMETH	4803	2348	pptv
10	1	PP	11.225	Mass	41.00	amu	ALLYCHLORID	761	8247	pptv
11	1	BP	11.578	Mass	151.00	amu	3CHL3FLUETHA	5477	1672	pptv
12	1	BP	12.492	Mass	63.00	amu	1,1DICHLOETH	5052	1738	pptv
13	1	VP	13.394	Mass	61.00	amu	c-1,2DICHLET	4761	1970	pptv
14	1	PH	13.713	Mass	83.00	amu	CHLOROFORM	5327	1678	pptv
15	1	BP	14.378	Mass	62.00	amu	1,2DICHLETHA	5009	2263	pptv
16	1	PB	14.594	Mass	97.00	amu	METHCHLOROFO	6656	2334	pptv
17	1	VP	15.009	Mass	78.00	amu	BENZENE	8352	2167	pptv
18	1	VP	15.154	Mass	117.00	amu	CARBONTETRAC	5888	1915	pptv
19	1	BB	15.821	Mass	63.00	amu	1,2DICHLPROP	3263	1799	pptv
20	1	BB	16.067	Mass	130.00	amu	TRICHLETHENE	4386	2109	pptv
21	1	PB	16.941	Mass	75.00	amu	c-1,3DICHLPR	2228	987.3	pptv
22	1	BP	17.475	Mass	75.00	amu	t-1,3DICHLPR	1626	689.2	pptv
23	1	BB	17.594	Mass	97.00	amu	1,1-2CHLETHA	2721	1772	pptv
24	1	BV	17.844	Mass	91.00	amu	TOLUENE	14417	2733	pptv
25	1	PB	18.463	Mass	107.00	amu	EDB	4070	1365	pptv
26	1	PH	18.989	Mass	166.00	amu	TETRACHLETHE	6874	2065	pptv
27	1	PB	19.705	Mass	112.00	amu	CHLOROBENZEN	5648	1524	pptv
28	1	BP	20.168	Mass	91.00	amu	ETHYLBENZENE	11084	1842	pptv
29	1	PB	20.372	Mass	91.00	amu	m,p-XYLENE	17989	3790	pptv

TABLE 6. (continued)

Peak No.	Type	Int Type	Ret Time	Signal Description			Compound Name	Area	Amount	
30	1	BV	20.778	Mass	104.00	amu	STYRENE	3145	1695	pptv
31	1	BH	20.887	Mass	83.00	amu	TETRACHLETHA	4531	1376	pptv
32	1	BP	20.892	Mass	91.00	amu	o-XYLENE	9798	2010	pptv
33	1	VV	22.488	Mass	105.00	amu	4-ETHYLTOLUE	7694	1481	pptv
34	1	VB	22.609	Mass	105.00	amu	1,3,5METHBEN	6781	1705	pptv
35	1	BB	23.144	Mass	105.00	amu	1,2,4METHBEN	7892	2095	pptv
36	1	BV	23.273	Mass	146.00	amu	m-DICHLBENZE	3046	1119	pptv
37	1	VV	23.279	Mass	91.00	amu	BENZYLCHLORI	3880	1006	pptv
38	1	VB	23.378	Mass	146.00	amu	p-DICHLBENZE	6090	2164	pptv
39	1	BP	23.850	Mass	146.00	amu	o-DICHLBENZE	2896	1249	pptv
40	1	BB	26.673	Mass	180.00	amu	1,24CHLBENZ	562	767.1	pptv
41	1	BB	27.637	Mass	225.00	amu	HEXACHLBUTAD	6309	1789	pptv

TABLE 7. COMPENDIUM METHOD TO-14A TYPICAL RETENTION TIME (MIN) AND CALIBRATION RESPONSE FACTORS (ppbv/area count) FOR TARGETED VOCs ASSOCIATED WITH FID AND ECD ANALYTICAL SYSTEM

Peak No.[1]	Compound	Retention Time (RT), minutes	FID Response Factor, (RF) (ppbv/area count)	ECD Response Factor (ppbv/area count x 10^{-5})
1	Freon 12	3.65	3.465	13.89
2	Methyl chloride	4.30	0.693	
3	Freon 114	5.13	0.578	22.32
4	Vinyl chloride	5.28	0.406	
5	Methyl bromide	6.44		26.34
6	Ethyl chloride	7.06	0.413	
7	Freon 11	8.60	6.367	1.367
8	Vinylidene chloride	9.51	0.347	
9	Dichloromethane	9.84	0.903	
10	Trichlorotrifluoroethane	10.22	0.374	3.955
11	1,1-Dichloroethane	11.10	0.359	
12	cis-1,2-Dichloroethylene	11.99	0.368	
13	Chloroform	12.30	1.059	11.14
14	1,2-Dichloroethane	12.92	0.409	
15	Methyl chloroform	13.12	0.325	3.258
16	Benzene	13.51	0.117	
17	Carbon tetrachloride	13.64	1.451	1.077
18	1,2-Dichloropropane	14.26	0.214	
19	Trichloroethylene	14.50	0.327	8.910
20	cis-1,3-Dichloropropene	15.31		
21	trans-1,3-Dichloropropene	15.83		
22	1,1,2-Trichloroethane	15.93	0.336	
23	Toluene	16.17	0.092	
24	1,2-Dibromoethane (EDB)	16.78	0.366	5.137
25	Tetrachloroethylene	17.31	0.324	1.449
26	Chlorobenzene	18.03	0.120	
27	Ethylbenzene	18.51	0.092	
28	m,p-Xylene	18.72	0.095	
29	Styrene	19.12	0.143	
30	1,1,2,2-Tetrachloroethane	19.20		9.856
31	o-Xylene	19.23		
32	4-Ethyltoluene	20.82	0.100	
33	1,3,5-Trimethylbenzene	20.94	0.109	
34	1,2,4-Trimethylbenzene	21.46	0.111	
35	m-Dichlorobenzene	21.50		
36	Benzyl chloride	21.56		
37	p-Dichlorobenzene	21.67	0.188	
38	o-Dichlorobenzene	22.12	0.188	
39	1,2,4-Trichlorobenzene	24.88	0.667	
40	Hexachlorobutadiene	25.82	0.305	1.055

[1]Refer to Figures 15 and 16 for peak location.

TABLE 8. TYPICAL RETENTION TIME (minutes) FOR SELECTED ORGANICS USING GC/FID/ECD/PID ANALYTICAL SYSTEM FOR COMPENDIUM METHOD TO-14A[1]

Compound	Retention Time (minutes)		
	FID	ECD	PID
Acetylene	2.984	--	--
1,3-Butadiene	3.599	--	3.594
Vinyl chloride	3.790	--	3.781
Chloromethane	5.137	--	--
Chloroethane	5.738	--	--
Bromoethane	8.154	--	--
Methylene Chloride	9.232	--	9.218
trans-1,2-Dichloroethane	10.077	--	10.065
1,1-Dichloroethane	11.190	--	--
Chloroprene	11.502	--	11.491
Perfluorobenzene	13.077	13.078	13.069
Bromochloromethane	13.397	13.396	13.403
Chloroform	13.768	13.767	13.771
1,1,1-Trichloroethane	14.151	14.153	14.158
Carbon Tetrachloride	14.642	14.667	14.686
Benzene/1,2-Dichloroethane	15.128	--	15.114
Perfluorotoluene	15.420	15.425	15.412
Trichloroethylene	17.022	17.024	17.014
1,2-Dichloropropene	17.491	17.805	17.522
Bromodichloromethane	18.369	--	--
trans-1,3-Dichloropropylene	19.694	19.693	19.688
Toluene	20.658	--	20.653
cis-1,3-Dichloropropylene	21.461	21.357	21.357
1,1,2-Trichloroethane	21.823	--	--
Tetrachloroethylene	22.340	22.346	22.335
Dibromochloromethane	22.955	22.959	22.952
Chlorobenzene	24.866	--	24.861
m/p-Xylene	25.763	--	25.757
Styrene/o-Xylene	27.036	--	27.030
Bromofluorobenzene	28.665	28.663	28.660
1,1,2,2-Tetrachloroethane	29.225	29.227	29.228
m-Dichlorobenzene	32.347	32.345	32.342
p-Dichlorobenzene	32.671	32.669	32.666
o-Dichlorobenzene	33.885	33.883	33.880

[1]Varian® 3700 GC equipped with J & W Megabore® DB 624 Capillary Column (30 m x 0.53 I.D. mm) using helium carrier gas.

TABLE 9. GC/MS/SIM CALIBRATION TABLE FOR COMPENDIUM METHOD TO-14A

Last Update: 18 Dec 96 7:54 am
Reference Peak Window: 5.00 Absolute Minutes
Non-Reference Peak Window: 0.40 Absolute Minutes
Sample Amount: 0.000 Uncalibrated Peak RF: 0.000 Multiplier: 1.000

Ret Time	Pk#	Signal Description		Amt pptv	Lvl	[Area]	Pk-Type	Partial Name
5.008	1	Mass	85.00 amu	13620	1	72974	1	FREON 12
5.690	2	Mass	50.00 amu	12720	1	36447	1	METHYLCHLORID
6.552	3	Mass	85.00 amu	8380	1	81251	1	FREON 114
6.709	4	Mass	62.00 amu	8050	1	20118	1	VINYLCHLORIDE
7.831	5	Mass	94.00 amu	12210	1	28265	1	METHYLBROMIDE
8.431	6	Mass	64.00 amu	12574	1	16149	1	ETHYLCHLORIDE
9.970	7	Mass	101.00 amu	12380	1	80088	1	FREON 11
10.927	8	Mass	61.00 amu	7890	1	38954	1	VINDENECHLORI
11.209	9	Mass	49.00 amu	12760	1	43507	1	DICHLOROMETHA
11.331	10	Mass	41.00 amu	12650	1	1945	1	ALLYLCHLORIDE
11.595	11	Mass	151.00 amu	7420	1	40530	1	3CHL3FLUETHAN
12.502	12	Mass	63.00 amu	12710	1	61595	1	1,1DICHLOETHA
13.403	13	Mass	61.00 amu	12630	1	50900	1	c-1,2DICHLETH
13.747	14	Mass	83.00 amu	7670	1	40585	1	CHLOROFORM
14.387	15	Mass	62.00 amu	9040	1	33356	1	1,2DICHLETHAN
14.623	16	Mass	97.00 amu	8100	1	38503	1	METHCHLOROFOR
15.038	17	Mass	78.00 amu	10760	1	69119	1	BENZENE
15.183	18	Mass	117.00 amu	8340	1	42737	1	CARBONTETRACH
15.829	19	Mass	63.00 amu	12780	1	38875	1	1,2DICHLPROPA
16.096	20	Mass	130.00 amu	8750	1	30331	1	TRICHLETHENE
16.956	21	Mass	75.00 amu	4540	1	17078	1	c-1,3DICHLPRO
17.492	22	Mass	75.00 amu	3380	1	13294	1	t-1,3DICHLPRO
17.610	23	Mass	97.00 amu	12690	1	32480	1	1,1-2CHLETHAN
17.862	24	Mass	91.00 amu	10010	1	88036	1	TOLUENE
18.485	25	Mass	107.00 amu	6710	1	33350	1	EDB
19.012	26	Mass	166.00 amu	7830	1	43454	1	TETRACHLETHEN
19.729	27	Mass	112.00 amu	7160	1	44224	1	CHLOROBENZENE
20.195	28	Mass	91.00 amu	12740	1	127767	1	ETHYLBENZENE
20.407	29	Mass	91.00 amu	25400	1	200973	1	m,p-XYLENE
20.806	30	Mass	104.00 amu	12390	1	38332	1	STYRENE
20.916	31	Mass	83.00 amu	11690	1	64162	1	TETRACHLETHAN
20.921	32	Mass	91.00 amu	11085	1	90096	1	o-XYLENE
22.528	33	Mass	105.00 amu	12560	1	108747	1	4-ETHYLTOLUEN
22.648	34	Mass	105.00 amu	12620	1	83666	1	1,3,5METHBENZ
23.179	35	Mass	105.00 amu	12710	1	79833	1	1,2,4METHBENZ
23.307	36	Mass	146.00 amu	12650	1	57409	1	m-DICHLBENZEN
23.317	37	Mass	91.00 amu	7900	1	50774	1	BENZYLCHLORID
23.413	38	Mass	146.00 amu	12390	1	58127	1	p-DICHLBENZEN
23.885	39	Mass	146.00 amu	13510	1	52233	1	o-DICHLBENZEN
26.714	40	Mass	180.00 amu	15520	1	18967	1	1,24CHLBENZE
27.680	41	Mass	225.00 amu	7470	1	43920	1	HEXACHLBUTADI

TABLE 10. EXAMPLE OF HARD-COPY OF GC/MS/SIM ANALYSIS BY COMPENDIUM METHOD TO-14A

Quantitation Report

```
Data File : C:\HPCHEM\1\DATA\6D25M03.D                    Vial: 3
Acq On    : 25 Apr 96  12:50 pm                       Operator: DANIELS
Sample    : AUDIT SAMPLE #239-54 250ML                Inst    : 5972 - In
Misc      :                                           Multiplr: 2.00
Quant Time: Apr 25 16:39 1996

Method       : C:\HPCHEM\1\METHODS\AUDIT.M
Title        : Initial Calibration 4/8/96   Std #4026-94
Last Update  : Thu Apr 25 16:36:11 1996
Response via : Continuing Calibration
CCal File    : C:\HPCHEM\1\DATA\6D25M01.D
```

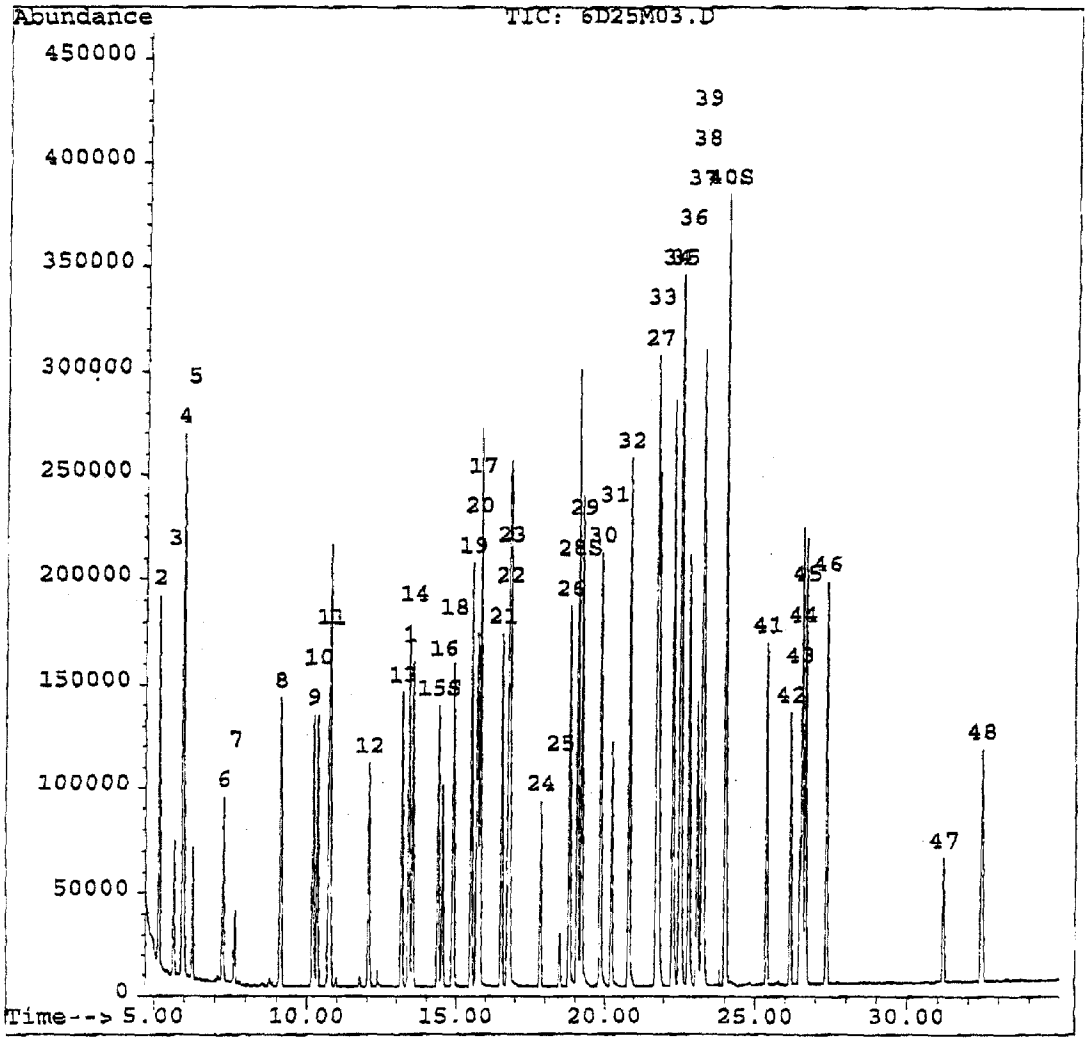

TABLE 10. (continued)

Internal Standards	R.T.	QIon	Response	Conc	Units	Dev(Min)
1) BROMOCHLOROMETHANE	13.40	49	173440	4.80	PPBV	0.00
17) 1,4-DIFLUOROBENZENE	15.79	114	383363	4.80	PPBV	0.00
27) CHLOROBENZENE-D5	21.73	117	346909	4.80	PPBV	0.00
System Monitoring Compounds						%Recovery
15) 1,2-DICHLOROETHANE-D4	14.39	65	177334	4.82	PPBV	100.33%
28) TOLUENE-D8	19.07	98	393347	4.78	PPBV	99.61%
40) BROMOFLUOROBENZENE	24.01	95	310217	4.61	PPBV	95.94%
Target Compounds						Qvalue
2) Freon 12	5.17	85	295965	7.67	PPBV	99
3) Chloromethane	5.65	50	113926	7.96	PPBV #	100
4) Freon 114	5.94	85	376276	7.88	PPBV	97
5) Chloroethene	6.25	62	113201	8.60	PPBV	100
6) Bromomethane	7.26	94	106443	8.74	PPBV	96
7) Chloroethane	7.64	64	57451	7.48	PPBV	99
8) Freon 11	9.13	101	266209	7.77	PPBV	98
9) 1,1-Dichloroethene	10.21	61	186189	8.03	PPBV	99
10) Methylene Chloride	10.35	49	158173	8.40	PPBV	99
11) Freon 113	10.75	101	225115	7.85	PPBV	99
12) 1,1-Dichloroethane	12.05	63	211903	7.80	PPBV	99
13) cis-1,2-Dichloroethene	13.16	61	170091	8.55	PPBV	99
14) Chloroform	13.54	83	236380	8.15	PPBV	98
16) 1,2-Dichloroethane	14.53	62	144398	7.92	PPBV	100
18) 1,1,1-Trichloroethane	14.89	97	208233	7.72	PPBV	99
19) Benzene	15.51	78	329475	8.45	PPBV	100
20) Carbon Tetrachloride	15.70	117	215628	7.87	PPBV	99
21) 1,2-Dichloropropane	16.52	63	135206	7.80	PPBV	99
22) Bromodichloromethane	16.74	83	275403	8.98	PPBV	98
23) Trichloroethene	16.80	95	139564	7.76	PPBV	100
24) cis-1,3-Dichloropropene	17.84	75	97972	4.79	PPBV	98
25) trans-1,3-Dichloropropene	18.49	75	27930	1.61	PPBV	100
26) 1,1,2-Trichloroethane	18.81	97	120253	7.66	PPBV	98
29) Toluene	19.22	91	334990	7.69	PPBV	97
30) Dibromochloromethane	19.85	129	243321	8.35	PPBV	99
31) 1,2-Dibromoethane	20.23	107	173047	7.17	PPBV	100
32) Tetrachloroethene	20.81	166	145120	7.91	PPBV	99
33) Chlorobenzene	21.80	112	253495	7.80	PPBV	97
34) Ethylbenzene	22.28	91	454612	8.32	PPBV	99
35) m,p-Xylene	22.53	91	581168	12.91	PPBV	99
36) Bromoform	22.80	173	210707	8.71	PPBV	100
37) Styrene	23.09	104	133812	5.06	PPBV	99
38) 1,1,2,2-Tetrachloroethane	23.24	83	268481	6.70	PPBV	99
39) o-Xylene	23.28	91	257133	5.29	PPBV	100
41) 1,3,5-Trimethylbenzene	25.37	105	198466	4.39	PPBV	99
42) 1,2,4-Trimethylbenzene	26.15	105	160459	3.49	PPBV	99
43) Benzyl chloride	26.47	91	107854	6.40	PPBV	99
44) 1,3-Dichlorobenzene	26.55	146	186397	6.44	PPBV	99
45) 1,4-Dichlorobenzene	26.66	146	180374	6.04	PPBV	99
46) 1,2-Dichlorobenzene	27.36	146	164427	6.03	PPBV	99
47) 1,2,4-Trichlorobenzene	31.19	180	42255	2.96	PPBV	99
48) Hexachlorobutadiene	32.45	225	56763	3.47	PPBV	99

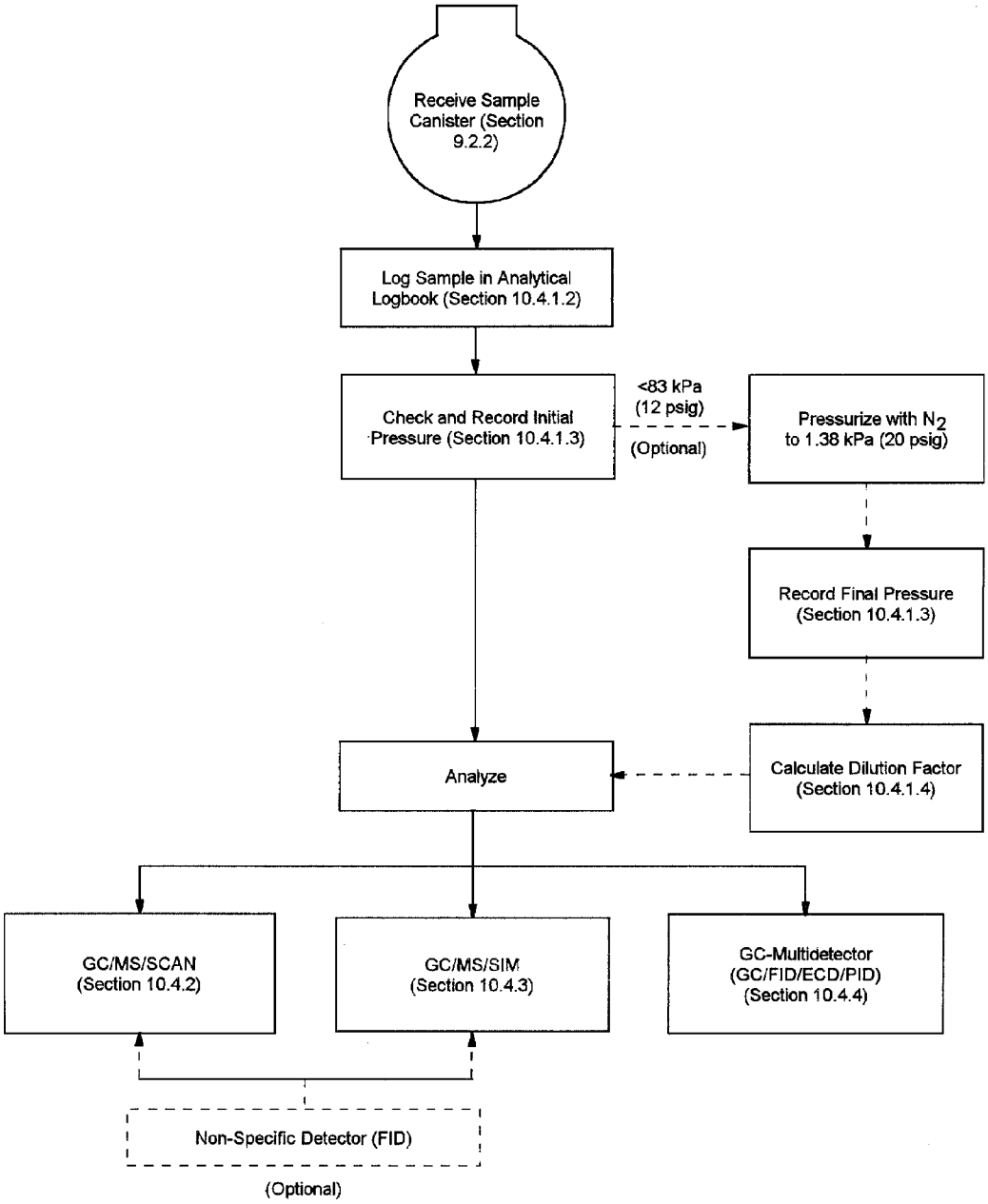

Figure 1. Analytical systems available for canister VOC identification and quantitation as part of Compendium Method TO-14A.

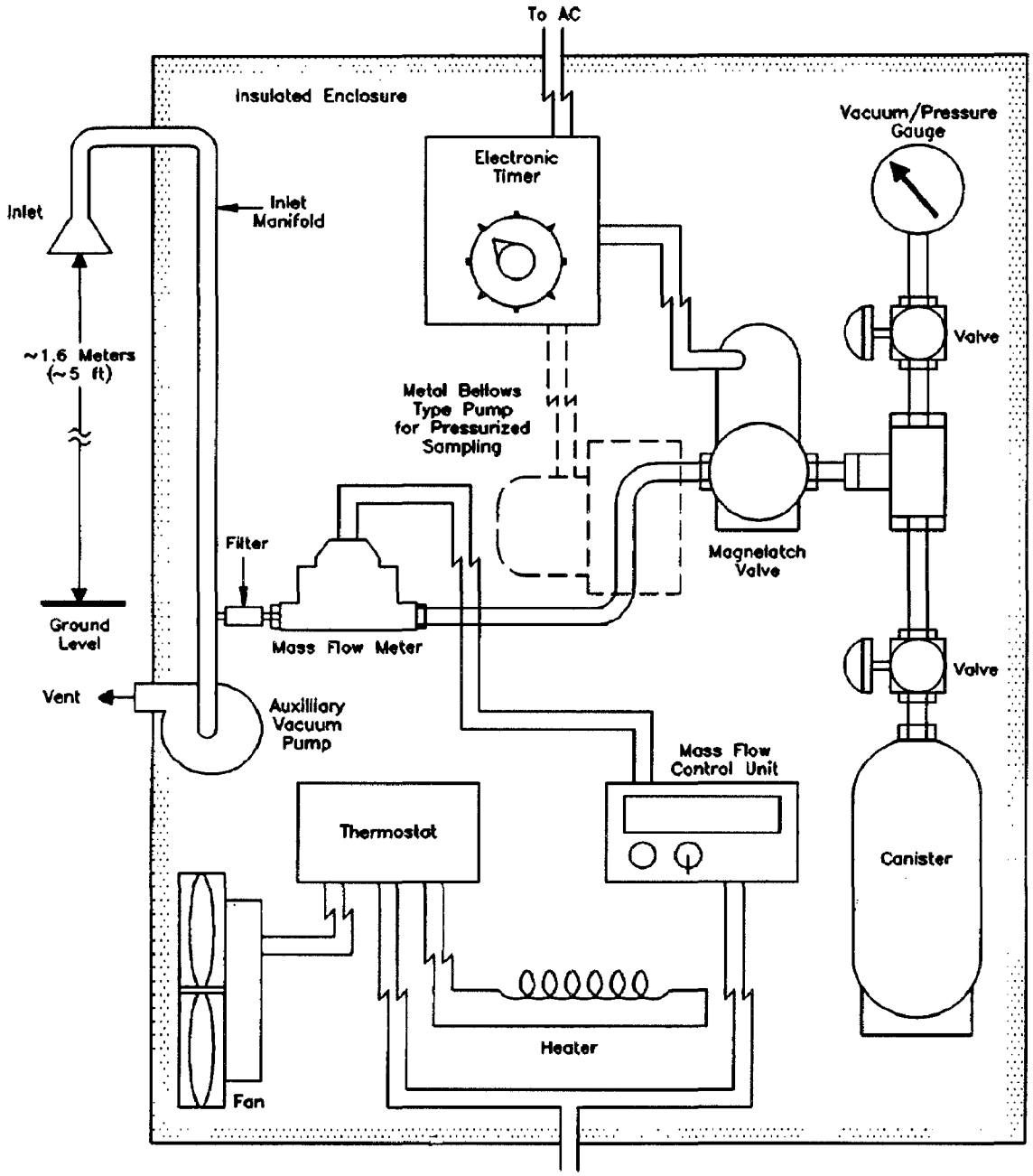

Figure 2. Example of sampler configuration for subatmospheric pressure or pressurized canister sampling used in Compendium Method TO-14A.

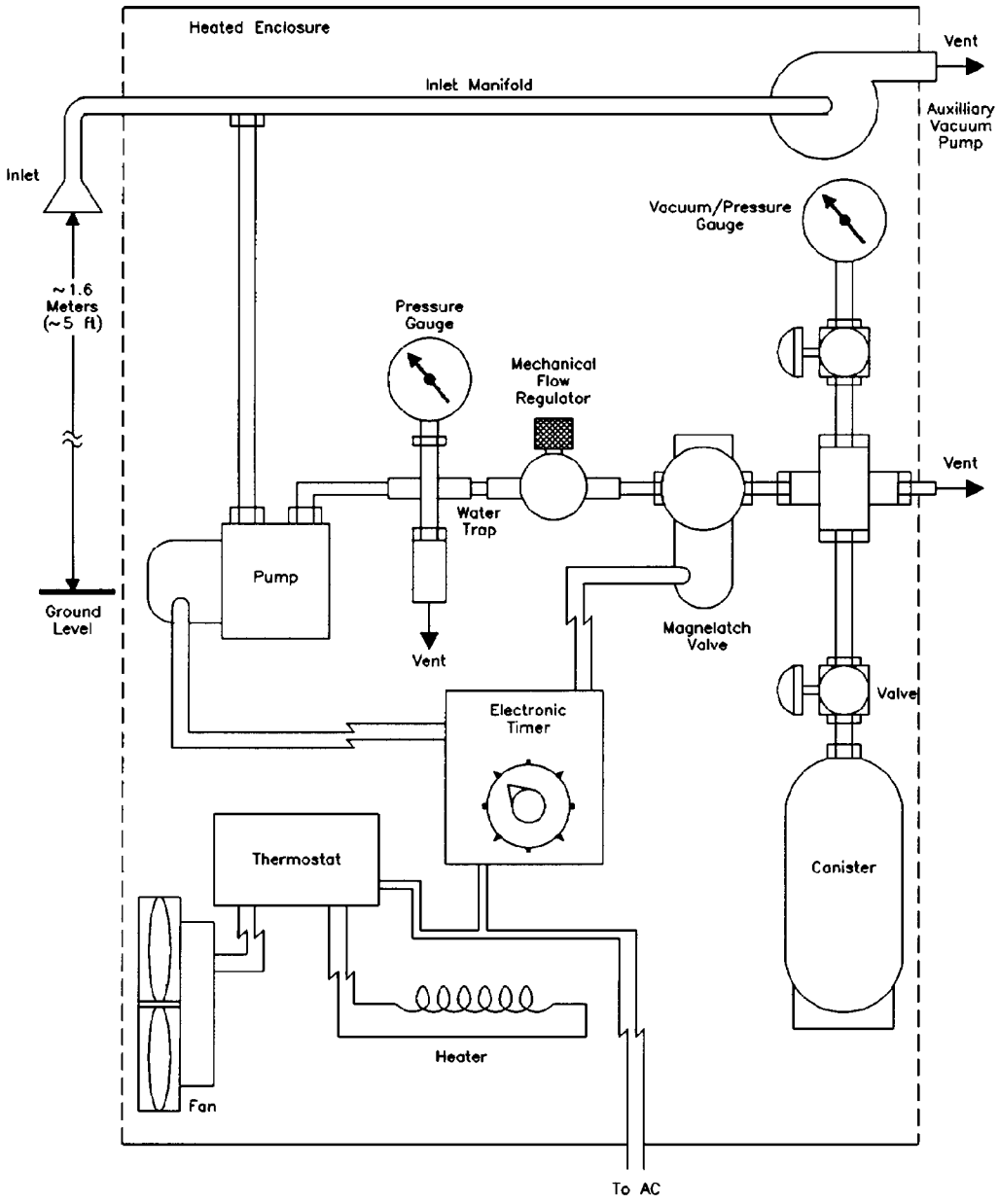

Figure 3. Example of alternative sampler configuration for pressurized canister sampling used in Compendium Method TO-14A.

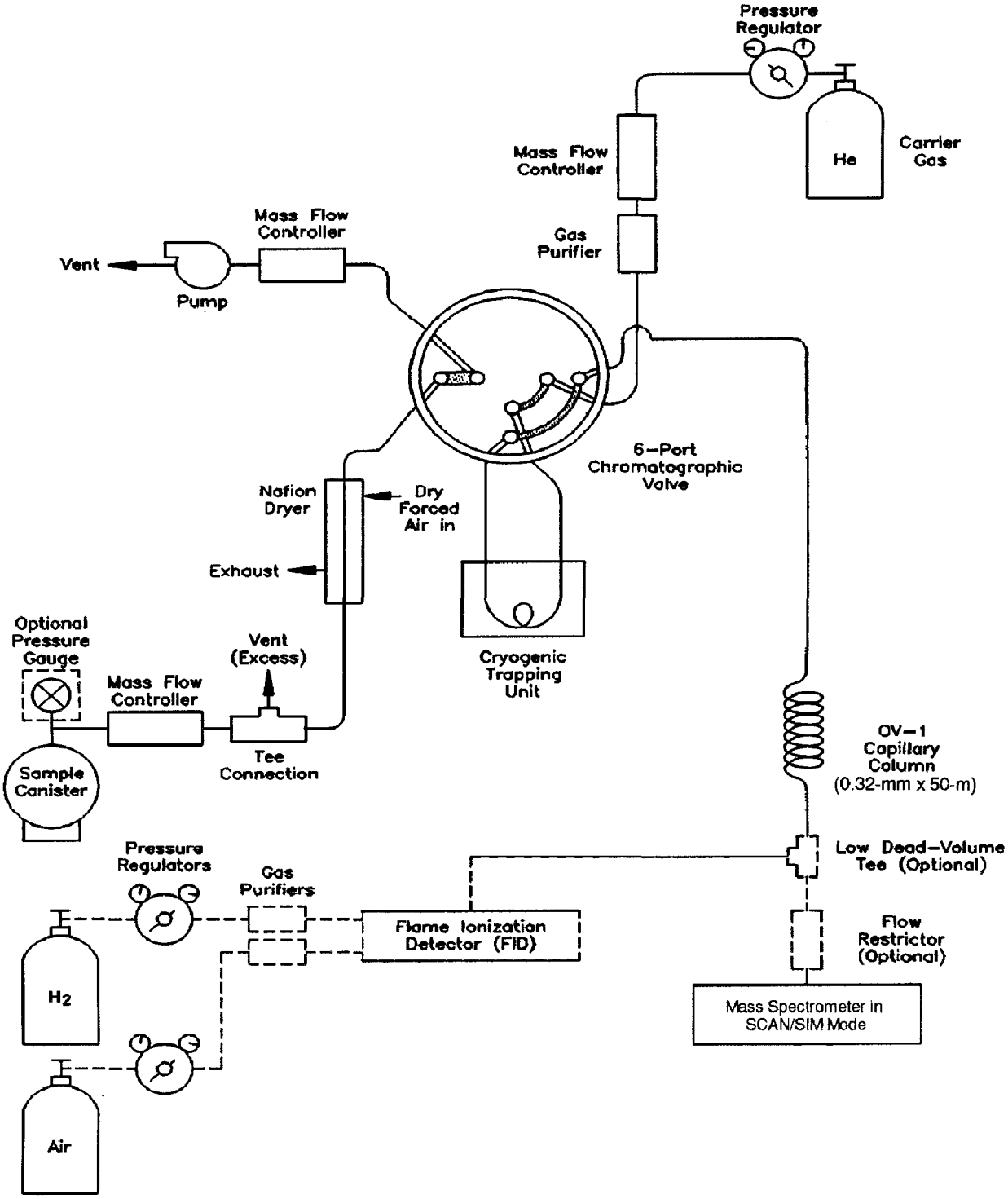

Figure 4. Compendium Method TO-14A canister analysis utilizing GC/MS/SCAN/SIM analytical system with optional FID with 6-port valve.

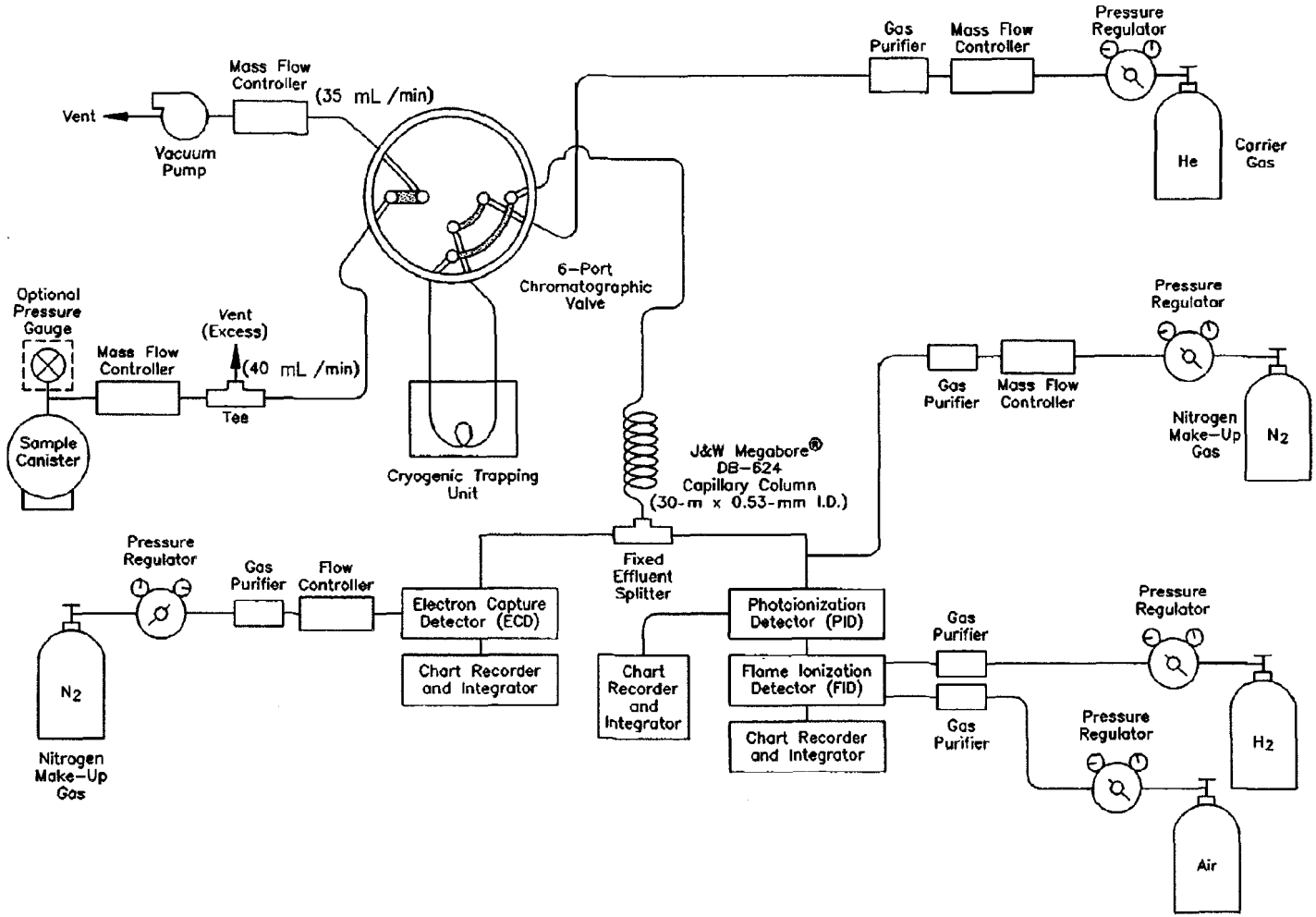

Figure 5. Compendium Method TO14A GC/FID/ECD Analytical System With the 6-Port Chromtographic Valve in the Sample Desorption Mode

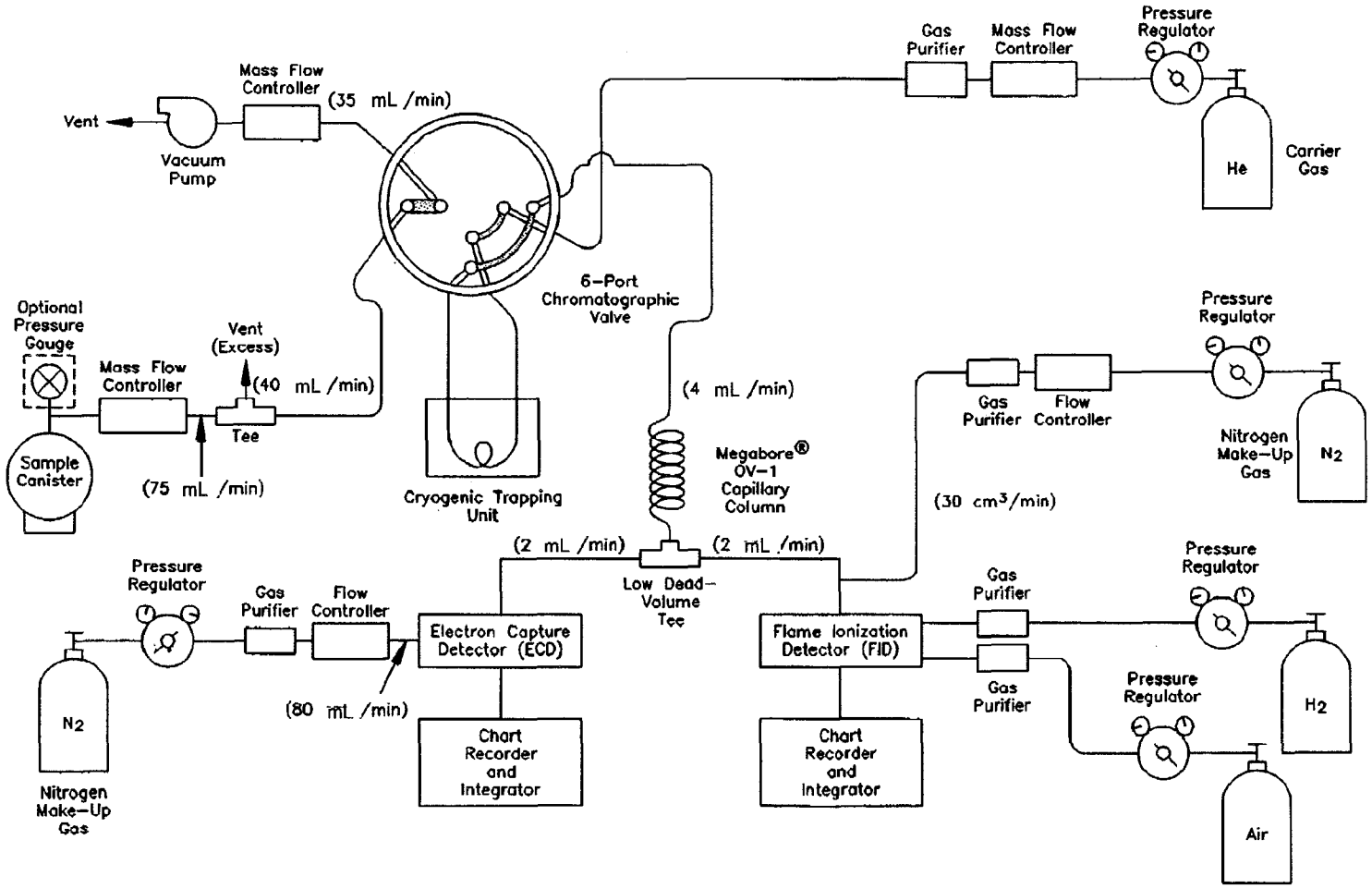

Figure 6. Compendium Method TO-14A system configuration associated with the GC/FID/ECD/PID analytical system with the 6-port chromatographic valve in the sample desorption mode.

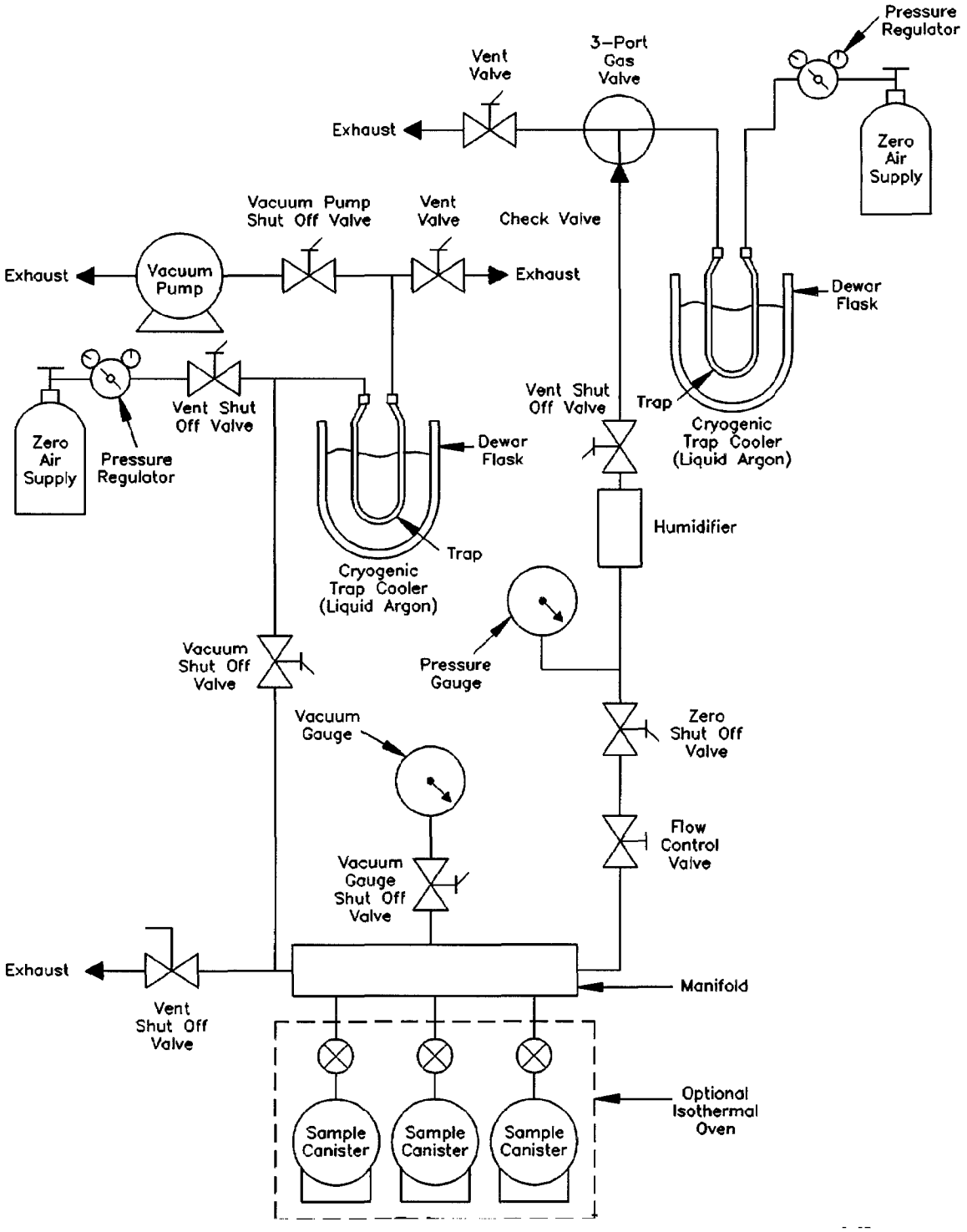

Figure 7. Compendium Method TO-14A canister cleaning system.

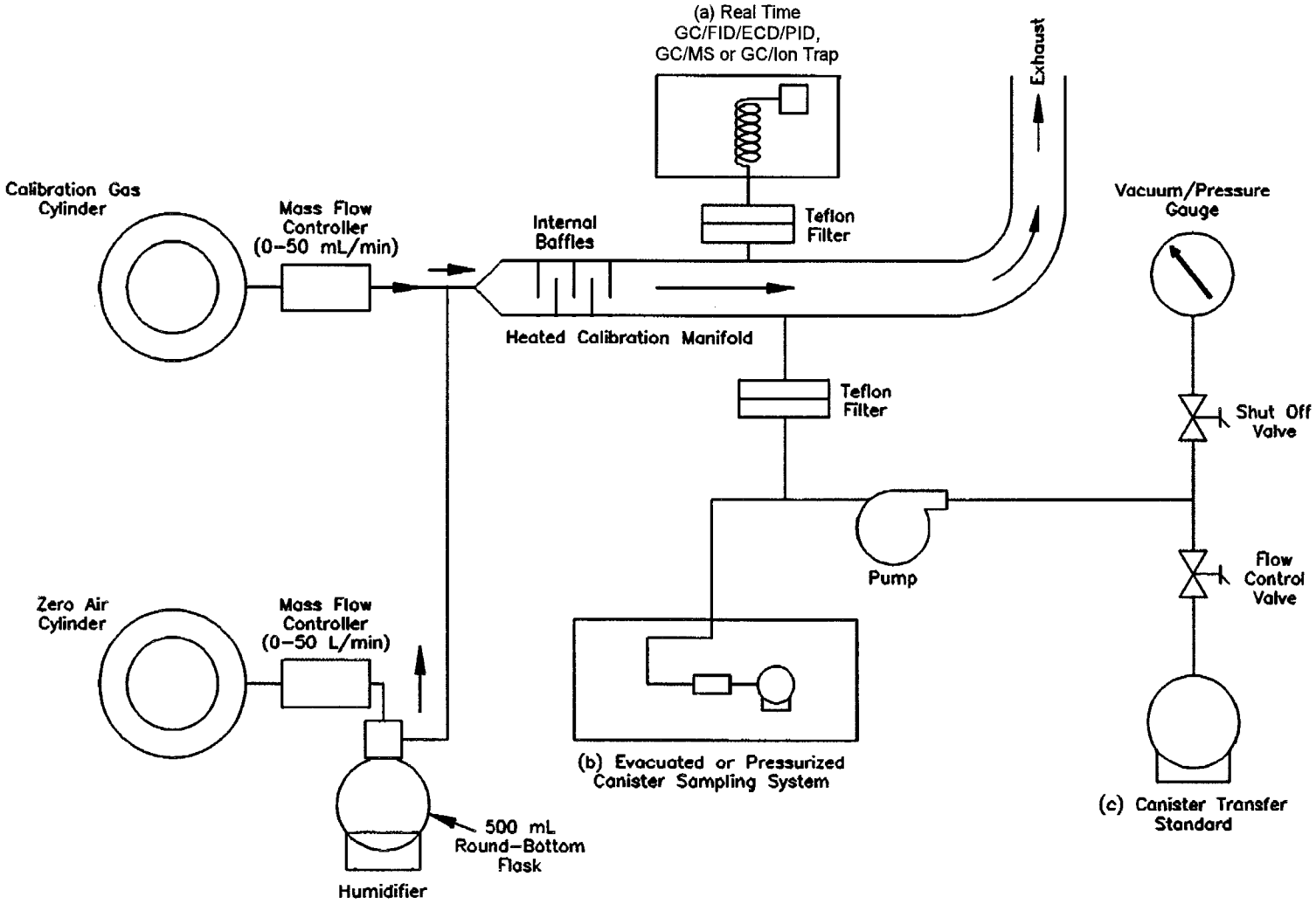

Figure 8. Compendium Method TO-14A schematic of calibration system and manifold for (a) analytical system calibration, (b) testing canister sampling system for (c) preparing canister transfer standards.

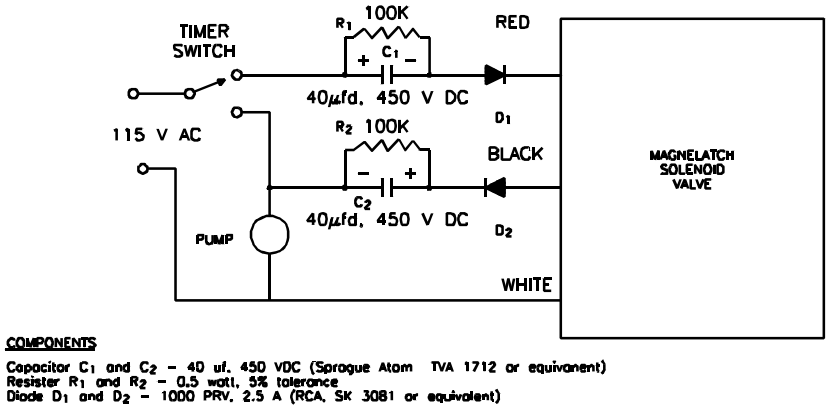

(a). Simple Circuit for Operating Magnelatch Valve

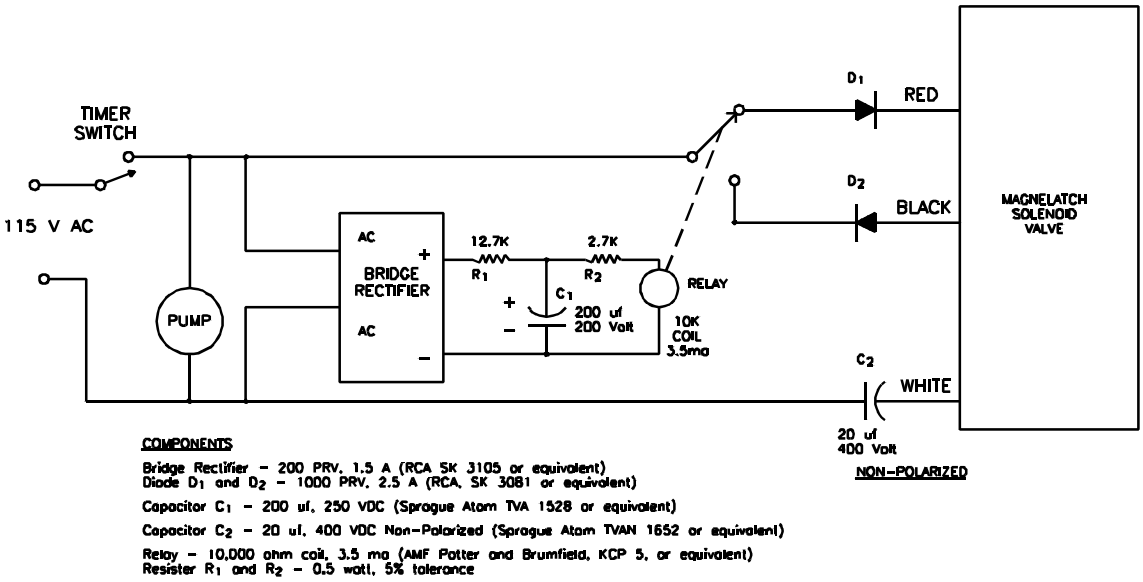

(b). Improved Circuit Designed to Handle Power Interruptions

Figure 9. Compendium Method TO-14A electrical pulse circuits for driving skinner magnelatch solenoid valve with a mechanical timer.

COMPENDIUM METHOD TO-14A
CANISTER FIELD TEST DATA SHEET

A. GENERAL INFORMATION

SITE LOCATION: _____

SITE ADDRESS: _____

_____

_____

SAMPLING DATE: _____

SHIPPING DATE: _____

CANISTER SERIAL NO.: _____

SAMPLER ID: _____

OPERATOR: _____

CANISTER LEAK CHECK DATE: _____

B. SAMPLING INFORMATION

TEMPERATURE

	INTERIOR	AMBIENT	MAXIMUM	MINIMUM
START				
STOP				

PRESSURE

CANISTER PRESSURE	

SAMPLING TIMES

	LOCAL TIME	ELAPSED TIME METER READING
START		
STOP		

FLOW RATES

MANIFOLD FLOW RATE	CANISTER FLOW RATE	FLOW CONTROLLER READOUT

SAMPLING SYSTEM CERTIFICATION DATE: _____

QUARTERLY RECERTIFICATION DATE: _____

C. LABORATORY INFORMATION

DATA RECEIVED: _____

INITIAL PRESSURE: _____

FINAL PRESSURE: _____

DILUTION FACTOR: _____

ANALYSIS

GC/FID/ECD DATE: _____

GC/MSD/SCAN DATE: _____

GC/MSD/SIM DATE: _____

RESULTS*: _____

_____

GC/FID/ECD: _____

GC/MSD/SCAN: _____

GC/MSD/SIM: _____

_____

SIGNATURE/TITLE

*ATTACH DATA SHEETS

Figure 10. Compendium Method TO-14A field test data sheet (FTDS).

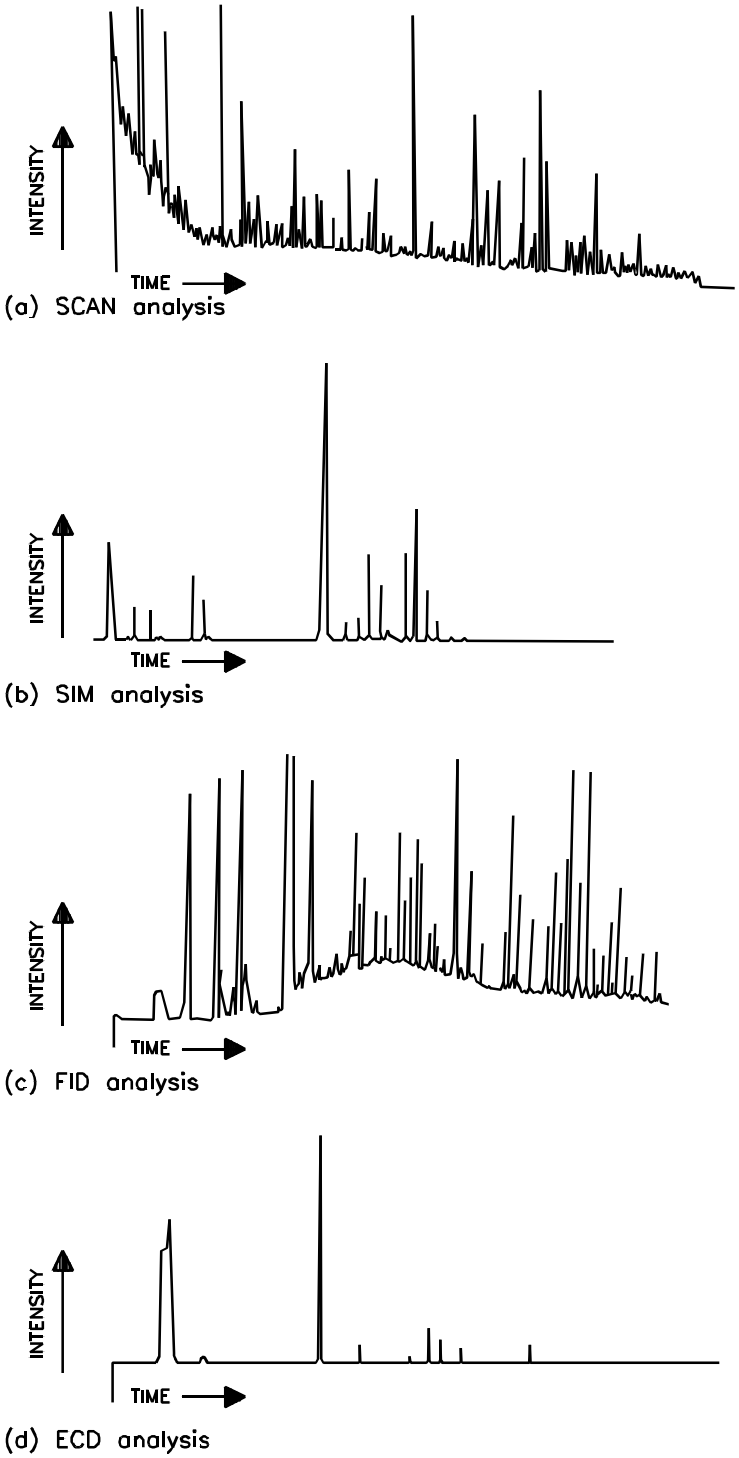

Figure 11. Compendium Method TO-14A typical chromatograms of a VOC sample analyzed by GC/MS/SCAN/SIM mode and GC-multidetector mode.

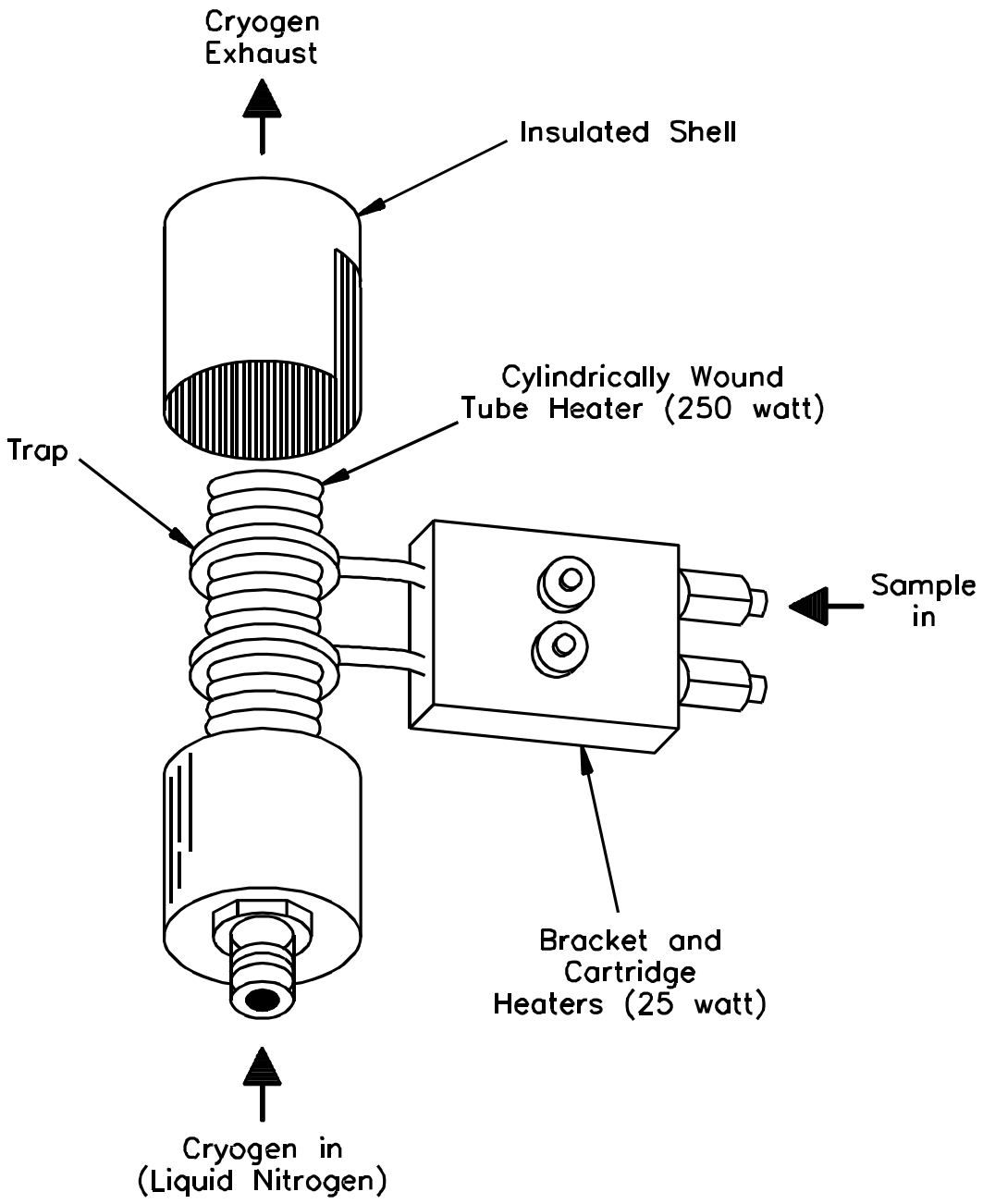

Figure 12. Example of Compendium Method TO-14A cryogenic trapping unit.

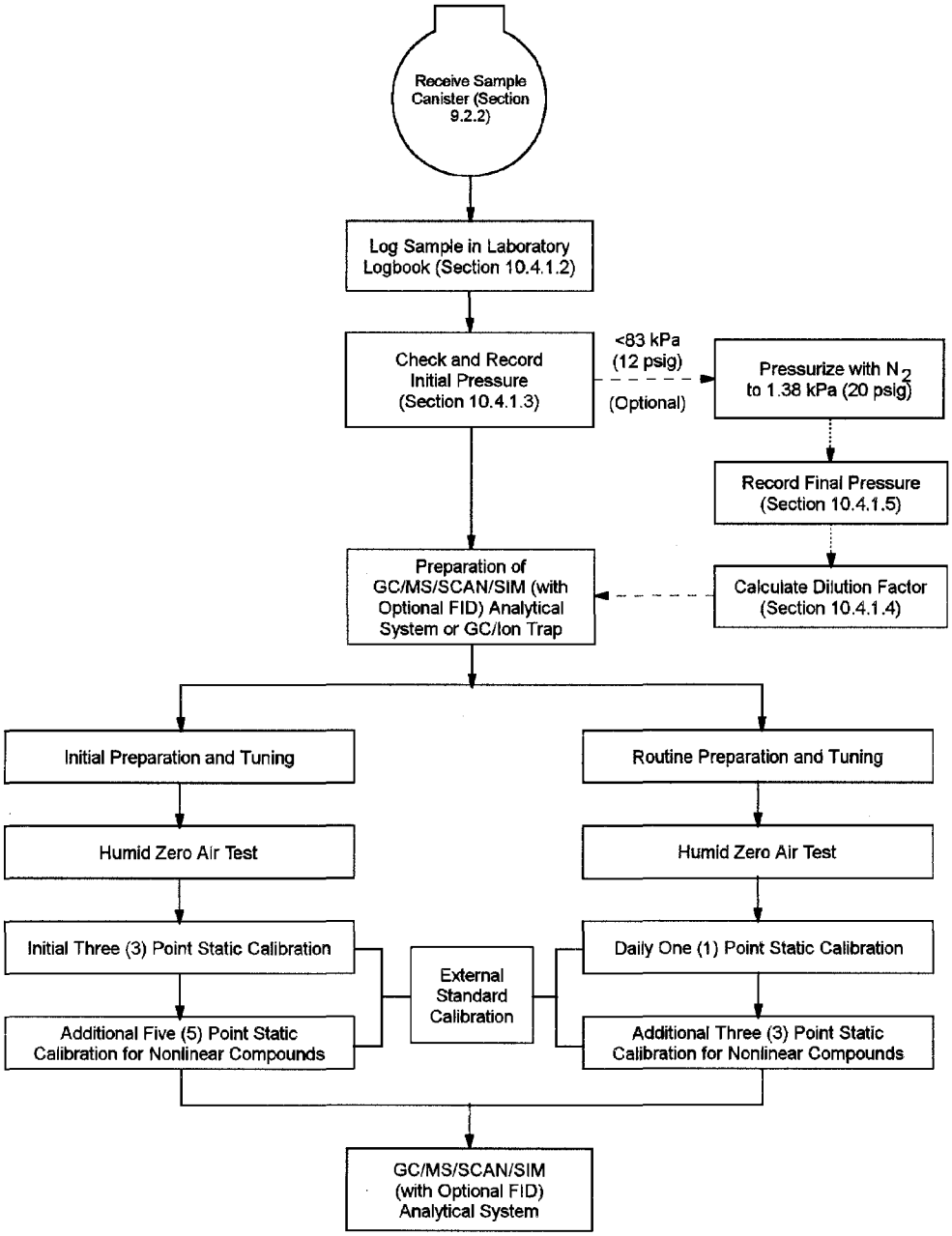

Figure 13. Compendium Method TO-14A flowchart of GC/MS/SCAN/SIM analytical system preparation (with optional FID system).

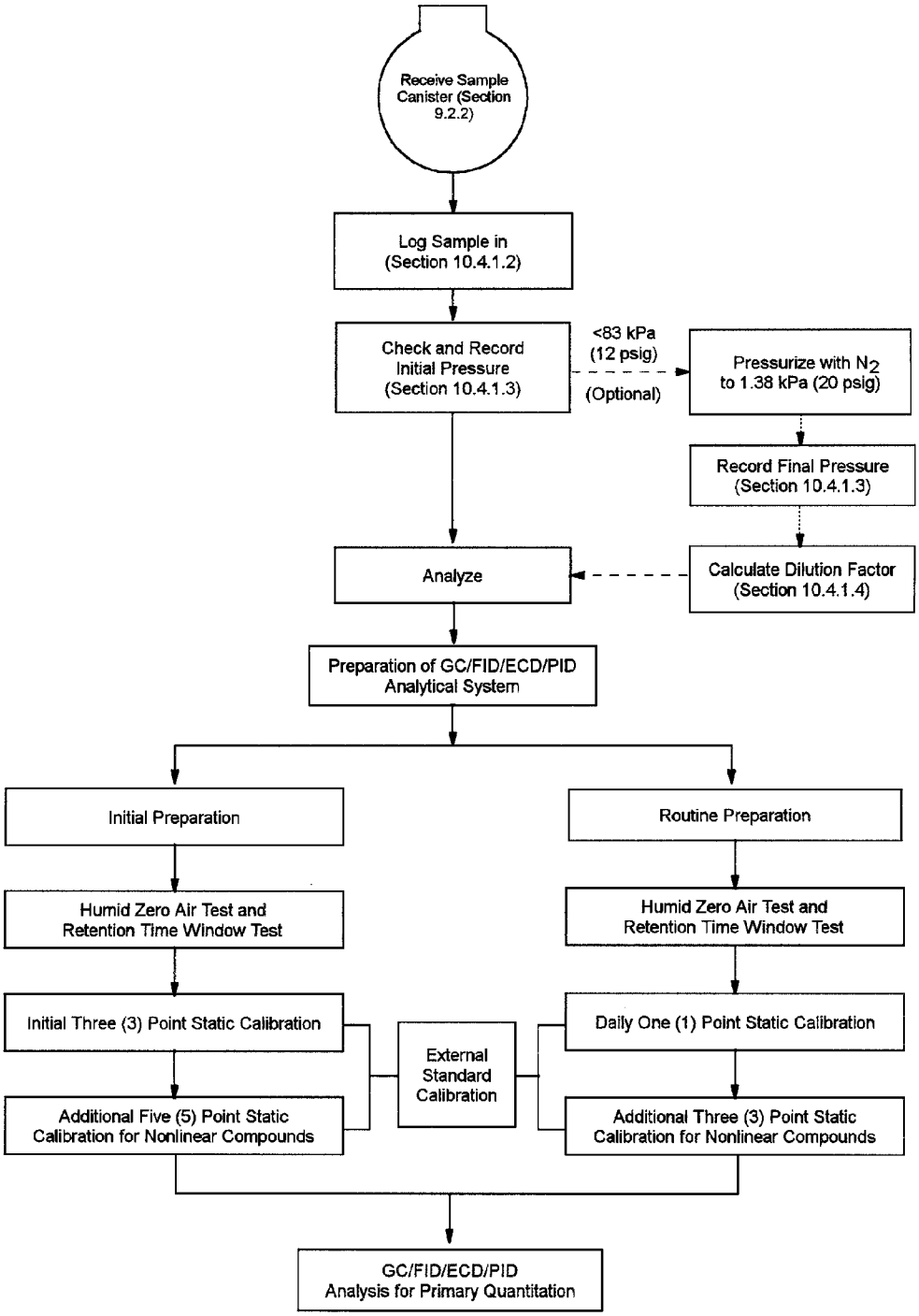

Figure 14. Compendium Method TO-14A flowchart of GC/FID/ECD/PID analytical system preparation.

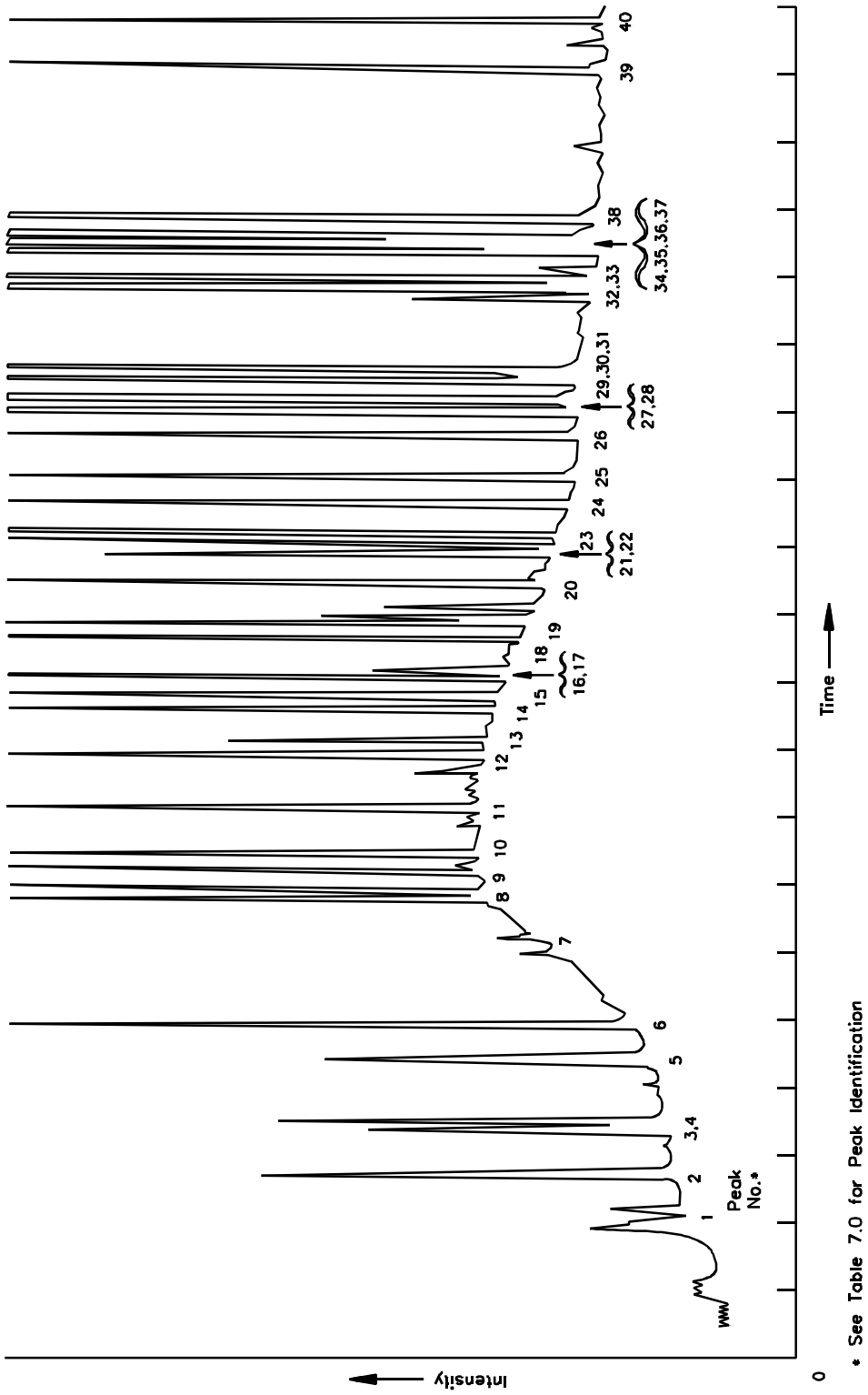

Figure 15. Typical FID response to selective VOCs using Compendium Method TO-14A.

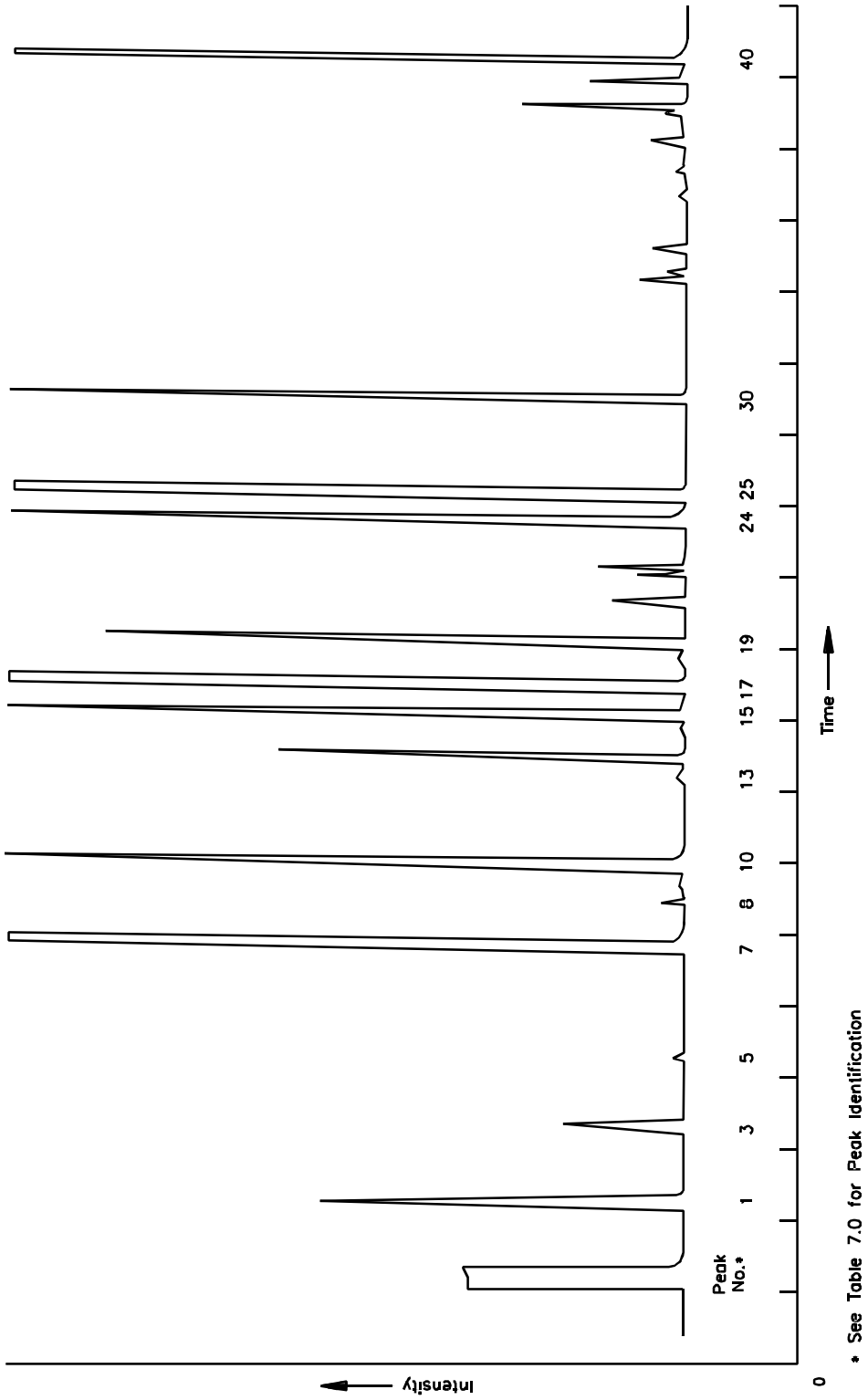

Figure 16. Typical ECD response to selective VOCs using Compendium Method TO-14A.

(a). Certified Sampler

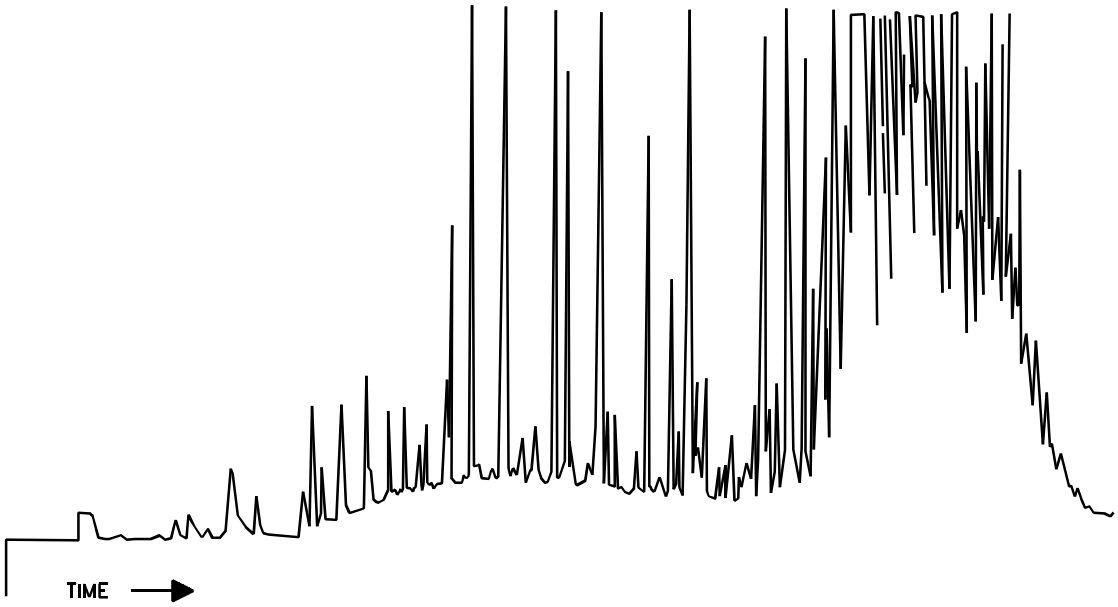

(b). Contaminated Sampler

Figure 17. Example of humid zero air test results for a clean sampler (a) and a contaminated sampler (b) used in Compendium Method TO-14A.

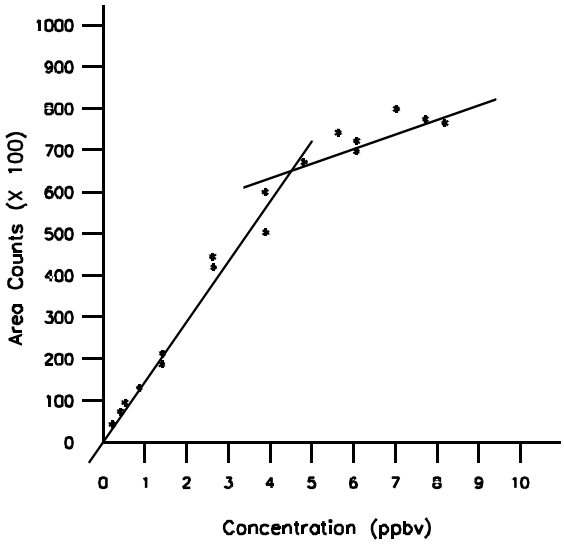

FIGURE 18(a). NONLINEAR RESPONSE OF TETRACHLOETHYLENE ON THE ECD

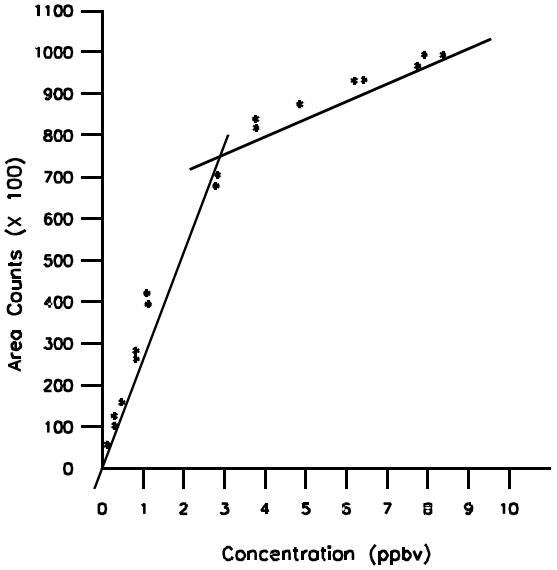

FIGURE 18(b). NONLINEAR RESPONSE OF CARBON TETRACHLORIDE ON THE ECD

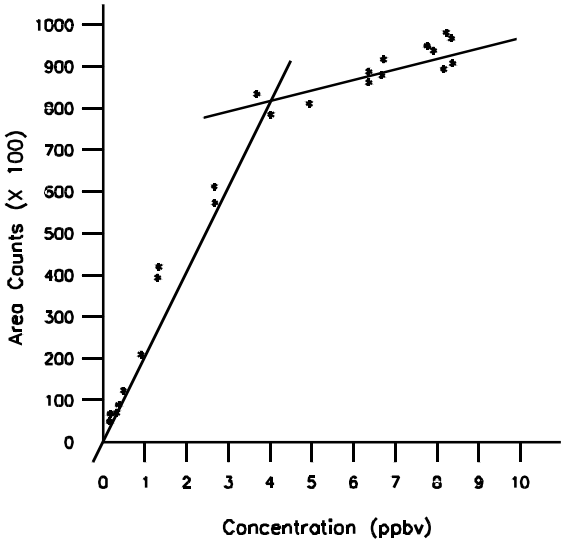

FIGURE 18(c). NONLINEAR RESPONSE OF HEXACHLOROBUTADIENE ON THE ECD

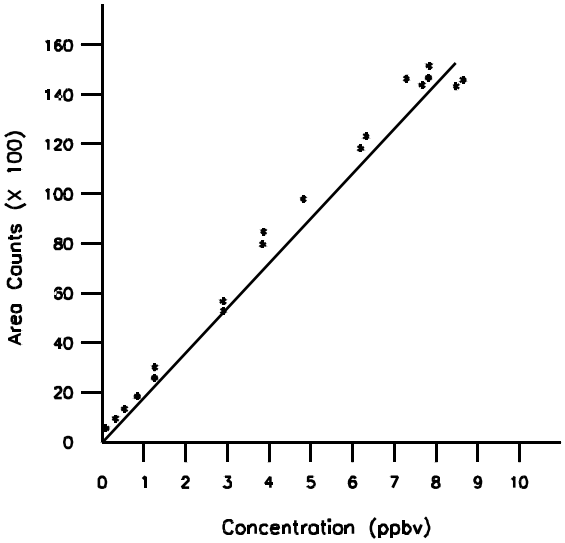

FIGURE 18(d). LINEAR RESPONSE OF CHLOROFORM ON THE ECD

Figure 18. Response of ECD to various VOCs as part of Compendium Method TO-14A.

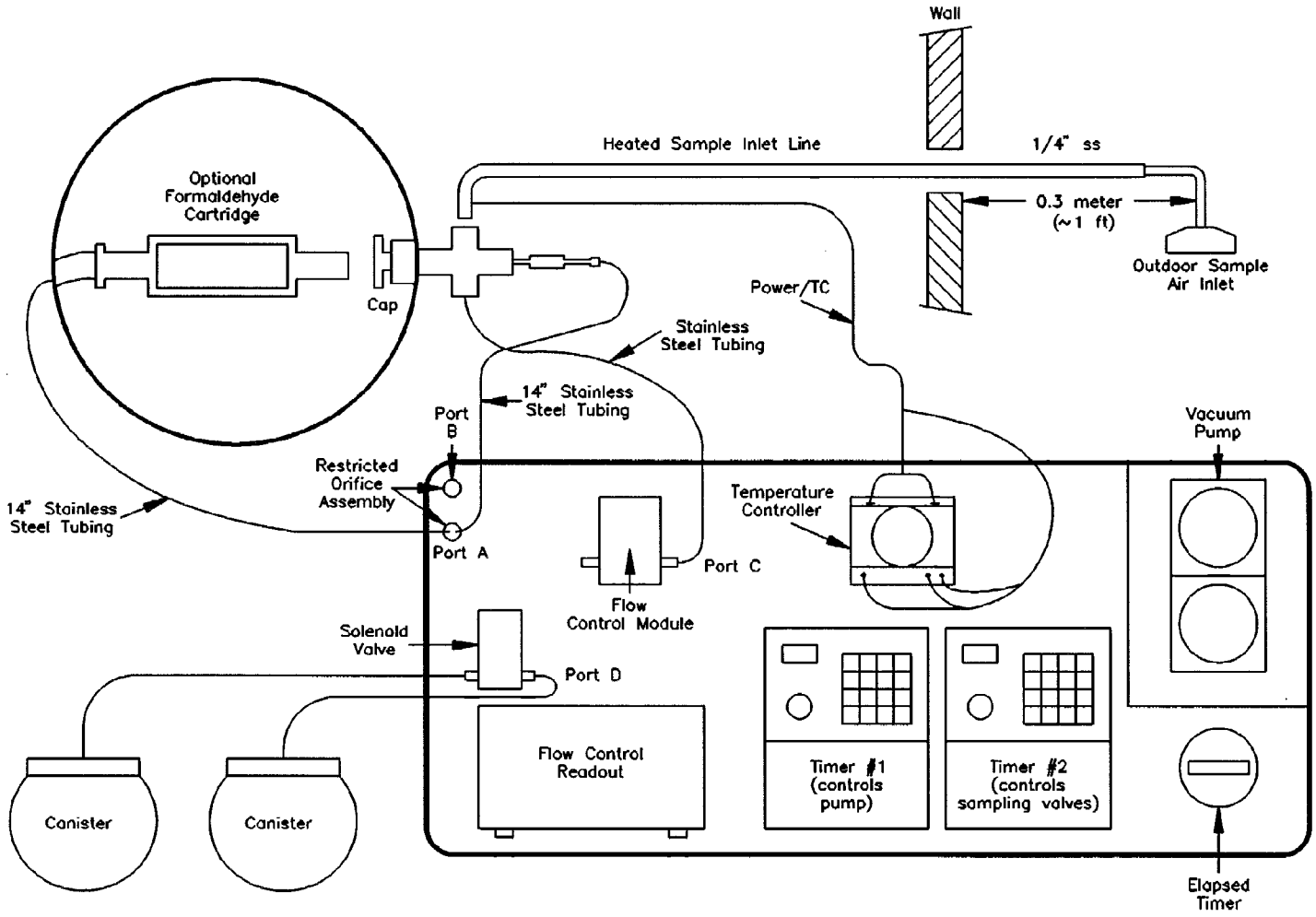

Figure 19. Example of sampler schematic used in EPA's UATMP.

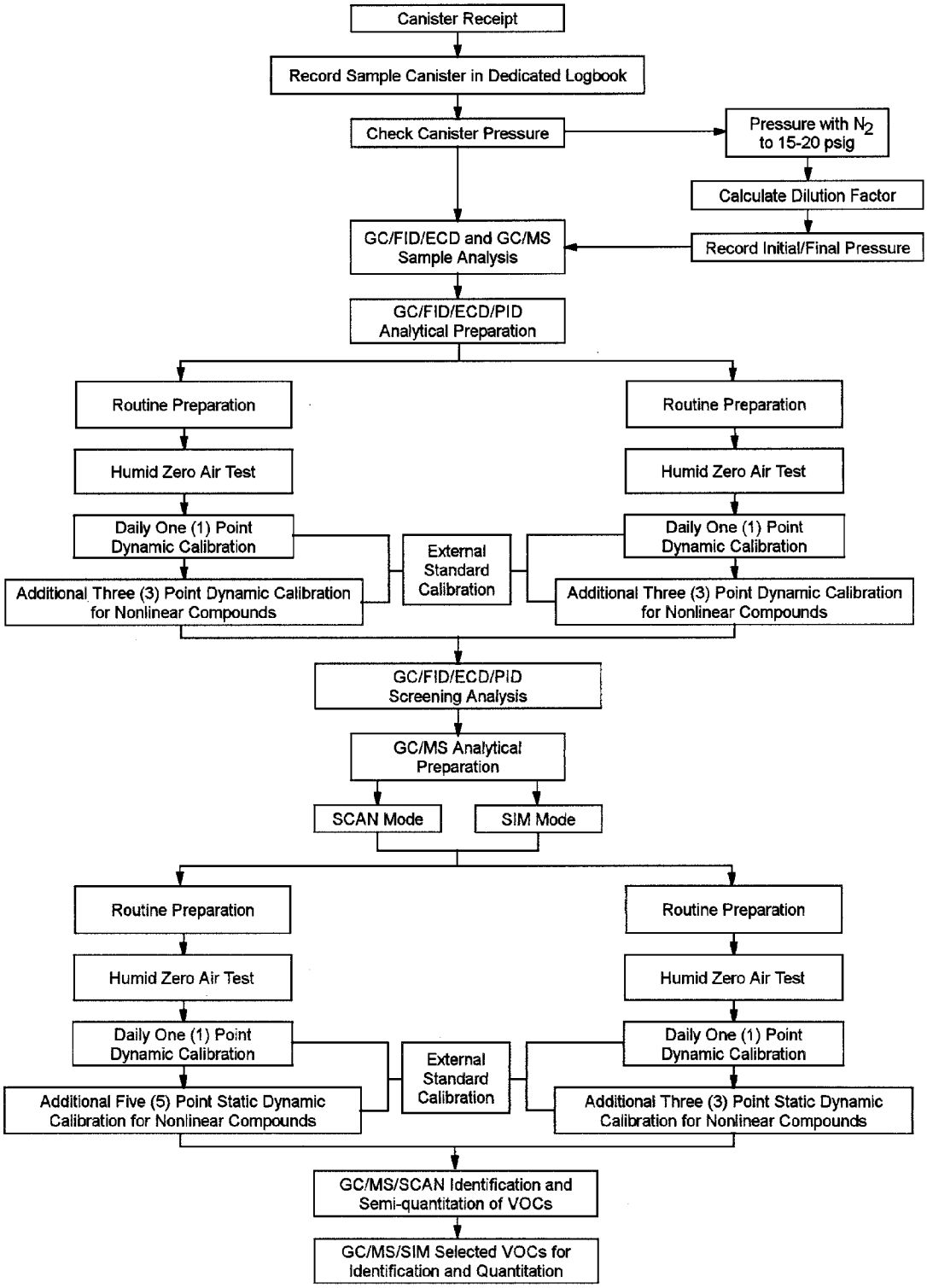

Figure 20. Flowchart of analytical systems preparation used in Compendium Method TO-14A.

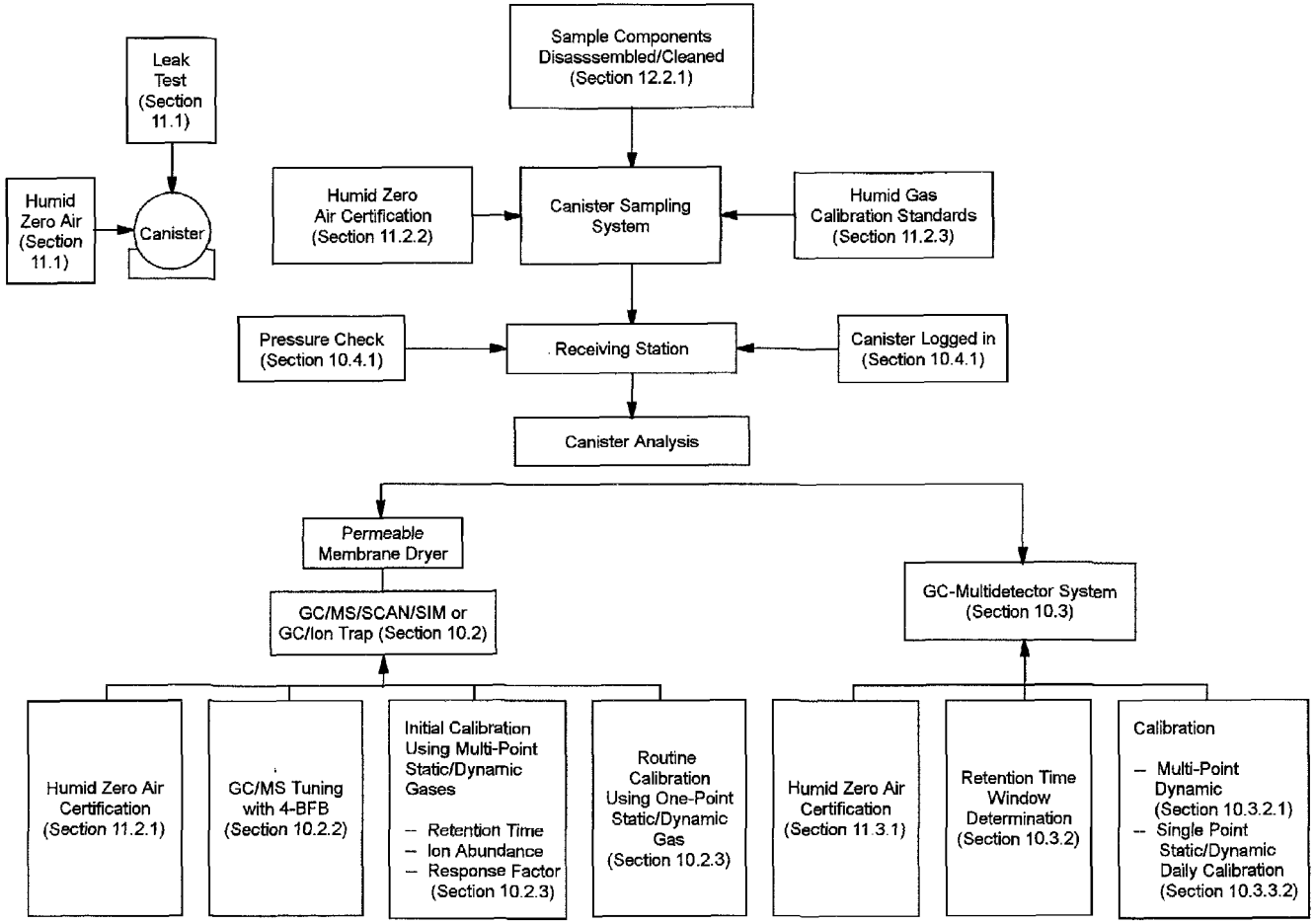

Figure 21. Compendium Method TO-14A system quality assurance/quality control (QA/QC) activities associated with various analtical systems.

Appendix A

Availability Of VOC Standards From United States Environmental Protection Agency

1. Availability of Audit Cylinders

1.1 At the time of the publication of the original Compendium Method TO-14, the USEPA provided cylinder gas standards of hazardous organic compounds at the ppb level. These standards were used to audit the performance of monitoring systems such as those described in the original Compendium Method TO-14. However, this service is no longer provided.

1.2 To obtain information about the availability of different audit gases, interested parties are encouraged to call commercial gas suppliers.

2. Audit Cylinder Certification

2.1 All audit cylinders should be periodically analyzed to assure that cylinder concentrations have remained stable.

2.2 All audit gases, including quality control analyses, of ppbv hazardous VOC standards should be traceable to NIST.

3. Information on EPA's VOC Standards

3.1 USEPA program/regional offices, state/local agencies, and others may obtain advice and information on VOC standards by calling:

Mr. Howard Christ
U.S. Environmental Protection Agency
National Exposure Research Laboratory (NERL)
Research Triangle Park, NC 27711
919-541-4531

[This page intentionally left blank]

Appendix B

Operating Procedures For A Portable Gas Chromatograph Equipped With A Photoionization Detector

1. Scope

This procedure is intended to screen ambient air environments for volatile organic compounds. Screening is accomplished by collection of VOC samples within an area and analysis on site using a portable gas chromatograph/integrator. This procedure is not intended to yield quantitative or definite qualitative information regarding the substances detected. Rather, it provides a chromatographic "profile" of the occurrence and intensity of unknown volatile compounds which assists in placement of fixed-site samplers.

2. Applicable Documents

2.1 ASTM Standards

- E260 *Recommended Practice for General Gas Chromatography Procedures*
- E355 *Practice for Gas Chromatography Terms and Relationships*

2.2 Other Documents

Portable Instruments User's Manual for Monitoring VOC Sources, EPA-34011-86-015, U. S. Environmental Protection Agency, Washington, DC, June, 1986.

3. Summary of Method

3.1 An air sample is extracted directly from ambient air and analyzed on site by a portable GC.

3.2 Analysis is accomplished by drawing an accurate volume of ambient air through a sampling port and into a concentrator, then the sample air is transported by carrier gas onto a packed column and into a PID, resulting in response peak(s). Retention times are compared with those in a standard chromatogram to predict the probable identity of the sample components.

4. Significance

4.1 VOCs are emitted into the atmosphere from a variety of sources including petroleum refineries, synthetic organic chemical plants, natural gas processing plants, and automobile exhaust. Many of these VOC emissions are acutely toxic; therefore, their determination in ambient air is necessary to assess human health impacts.

4.2 Conventional methods for VOC determination use solid sorbent and canister sampling techniques.
4.3 Collection of ambient air samples in canisters provides (1) convenient integration of ambient samples over a specific time period, (e.g., 24 hours); (2) remote sampling and central analysis; (3) ease of storing and shipping samples, if necessary; (4) unattended sample collection; (5) analysis of samples from multiple sites with one analytical system; and (6) collection of sufficient sample volume to allow assessment of measurement precision and/or analysis of samples by several analytical systems.

4.4 The use of portable GC equipped with multidetectors has assisted air toxics programs by using the portable GC as a "screening tool" to determine "hot spots," potential interferences, and semi-quantitation of VOCs, prior to locating more traditional fixed-site samplers.

5. Definitions

Definitions used in this document and in any user-prepared Standard Operating Procedures (SOPs) should be consistent with ASTM Methods D1356 and E355. Abbreviations and symbols pertinent to this method are defined at point of use.

6. Interferences

6.1 The most significant interferences result from extreme differences in limits of detection (LOD) among the target VOCs (see Table B-1). Limitations in resolution associated with ambient temperature, chromatography and the relatively large number of chemicals result in coelution of many of the target components. Coelution of compounds with significantly different PID sensitivities will mask compounds with more modest sensitivities. This will be most dramatic in interferences from benzene and toluene.

6.2 A typical chromatogram and peak assignments of a standard mixture of target VOCs (under the prescribed analytical conditions of this method) are illustrated in Figure B-1. Samples which contain a highly complex mixture of components and/or interfering levels of benzene and toluene are analyzed on a second, longer chromatographic column. The same liquid phase in the primary column is contained in the alternate column but at a higher percent loading.

6.3 Recent designs in commercially available GCs have preconcentrator capabilities for sampling lower concentrations of VOCs, pre-column detection with back-flush capability for shorter analytical time, constant column temperature for method precision and accuracy and multidetector (PID, ECD, and FID) capability for versatility. Many of these newer features address the weaknesses and interferences mentioned above. A list of major manufacturers of portable GC systems is provided in Table B-2.

7. Apparatus

7.1 Gas Chromatogram

A GC, Photovac Inc., 739 B Parks Ave, Huntington, NY 11743, Model 10S10 or 10S50, or equivalent used for surveying ambient air environments (which could employ a multidetector) for sensing numerous VOCs compounds eluting from a packed column at ambient temperatures. This particular portable GC procedure is

written employing the photoionization detector as its major sensing device, as part of the portable GC survey tool. Chromatograms are developed on a column of 3% SP-2100 on 100/120 supelcoport (0.66-m x 3.2-mm I.D.) with a flow of 30 mL/min air.

7.2 GC Accessories

In addition to the basic gas chromatograph, several other pieces of equipment are required to execute the survey sampling. Those include gas-tight syringes for standard injection, alternate carrier gas supplies, high pressure connections for filling the internal carrier gas reservoir, and if the Model 10S10 is used, a recording integrator.

8. Reagents and Materials

8.1 Carrier Gas

"Zero" air [<0.1 ppm total hydrocarbon(THC)] is used as the carrier gas. This gas is conveniently contained in 0.84 m^3 (30 ft^3) aluminum cylinders. Carrier gas of poorer quality may result in spurious peaks in sample chromatograms. A Brooks, Type 1355-00F1AAA rotameter (or equivalent) with an R-215-AAA tube and glass float is used to set column flow.

8.2 System Performance Mixture

A mixture of three target compounds (e.g., benzene, trichloroethylene, and styrene) in nitrogen is used for monitoring instrument performance. The approximate concentration for each of the compounds in this mixture is 10 parts per billion (ppb). This mixture is manufactured in small, disposable gas cylinders [at 275 kPa (40 psi)] various commercial vendors.

8.3 Reagent Grade Nitrogen Gas

A small disposable cylinder of high purity nitrogen gas is used for blank injections.

8.4 Sampling Syringes

Gas-tight syringes, without attached shut-off valves (Hamilton Model 1002LT, or equivalent) are used to introduce accurate sample volumes into the high pressure injectors on the portable gas chromatograph. Gas syringes with shut-off valves are not recommended because of memory problems associated with the valves. For samples suspected of containing high concentrations of volatile compounds, disposable glass syringes (e.g., Glaspak, or equivalent) with stainless steel/Teflon® hub needles are used.

8.5 High Pressure Filter

An adapter (Photovac SA101, or equivalent) for filling the internal carrier gas reservoir on the portable GC is used to deliver "zero" air.

9. Procedure

9.1 Instrument Setup

9.1.1 The portable gas chromatograph must be prepared prior to use in the ambient survey sampling. The pre-sampling activities consist of filling the internal carrier gas cylinder, charging the internal power supply, adjusting individual column carrier gas flows, and stabilizing the photoionization detector.

9.1.2 The internal reservoir is filled with "zero" air. The internal 12V battery can be recharged to provide up to eight hour of operation. A battery which is discharged will automatically cause the power to the instrument to be shut down and will require an overnight charge. During AC operation, the batteries will automatically be trickle-charged or in a standby mode.

9.1.3 The portable GC should be operated (using the internal battery power supply) at least forty minutes prior to collection of the first sample to insure that the photoionization detector has stabilized. Upon arriving at the area to be sampled, the unit should be connected to AC power, if available.

9.2 Sample Collection

9.2.1 After the portable gas chromatograph is located and connected to 110V AC, the carrier gas glows must be adjusted. Flows to the 1.22 meter, 5% SE-30 and 0.66 meter, 3% SP2100 columns are adjusted with needle valves. Flows of 60 mL/min (5% SE-30) and 30 mL/min (3% SP2100) are adjusted by means of a calibrated rotameter. Switching between the two columns is accomplished by turning the valve located beneath the electronic module. During long periods of inactivity, the flows to both columns should be reduced to conserve pressure in the internal carrier gas supply. The baseline on the recorder/integrator is set to 20% full scale.

9.2.2 Prior to analysis of actual samples, an injection of the performance evaluation mixture must be made to verity chromatographic and detector performance. This is accomplished by withdrawing 1.0 mL samples of this mixture from the calibration cylinder and injecting it onto the 3% SP2100 column. The next sample analyzed should be a blank, consisting of reagent grade nitrogen.

9.2.3 Ambient air samples are injected onto the 3% SP2100 column. The chromatogram is developed for 15 minutes. Samples which produce particularly complex chromatograms, especially for early eluting components, are reinjected on the 5% SE-30 column.

[Note: In no instance should a syringe which has been used for the injection of the calibrant/system performance mixture be use for the acquisition and collection of samples, or vice versa.]

9.2.4 Samples have generally been collected from the ambient air at sites which are near suspected sources of VOCs and compared with those which are not. Typically, selection of sample locations is based on the presence of chemical odors. Samples collected in areas without detectable odors have not shown significant PID responses. Therefore, sampling efforts should be initially concentrated on "suspect" environments (i.e., those which have appreciable odors). The objective of the sampling is to locate sources of the target compounds. Ultimately, samples should be collected throughout the entire location, but with particular attention given to areas of high or frequent occupation.

9.3 Sample Analysis

9.3.1 Quantitative Analysis. Positive identification of sample components is not the objective of this "screening" procedure. Visual comparison of retention times to those in a standard chromatogram (Figure B-1) are used only to predict the probable sample component types.

9.3.2 Estimation of Levels. As with qualitative analysis, estimates of component concentrations are extremely tentative and are based on instrument responses to the calibrant species (e.g., benzene, trichloroethylene, styrene), the proposed component identification, and the difference in response between sample component and calibrant. For purposes of locating pollutant emission sources, roughly estimated concentrations and suspected compound types are considered sufficient.

10. Performance Criteria and Quality Assurance

Required quality assurance measures and guidance concerning performance criteria that should be achieved within each laboratory are summarized and provided in the following section.

10.1 Standard Operating Procedures

10.1.1 SOPs should be generated by the users to describe and document the following activities in their laboratory: (1) assembly, calibration, leak check, and operation of the specific portable GC sampling system and equipment used; (2) preparation, storage, shipment,and handling of the portable GC sampler; (3) purchase, certification, and transport of standard reference materials; and (4) all aspects of data recording and processing, including lists of computer hardware and software used.

10.1.2 Specific stepwise instructions should be provided in the SOPs and should be readily available to and understood by the personnel conducting the survey work.

10.2 Quality Assurance Program

10.2.1 Reagent and Materials Control. The carrier gas employed with the portable GC is "zero air" containing less than 0.1 ppm VOCs. System performance mixtures are certified standard mixtures purchased form Scott Specialty Gases, or equivalent.

10.2.2 Sampling Protocol and Chain of Custody. Sampling protocol sheets must be completed for each sample. Specifics of the sample with regard to sampling location, sample volume, analysis conditions, and supporting calibration and visual inspection information are detailed by these documents. An example form is exhibited in Table B-3.

10.2.3 Blanks, Duplicates, and System Performance Samples.

10.2.3.1 Blanks and Duplicates. Ten percent of all injections made to the portable GC are blanks, where the blank is reagent grade nitrogen gas. This is the second injection in each sampling location. An additional 10% of all injections made are duplicate injections. This will enhance the probability that the chromatograph of a sample reflects only the composition of that sample and not any previous injection. Blank injections showing a significant amount of contaminants will be cause for remedial action.

10.2.3.2 System Performance Mixture. An injection of the system performance mixture will be made at the beginning of a visit to a particular sampling location (i.e., the first injection). The range of acceptable chromatographic system performance criteria and detector response is shown in Table B-4. These criteria are selected with regard to the intended application of this protocol and the limited availability of standard mixtures in this area. Corrective action should be taken with the column or PID before sample injections are made if the

performance is deemed out-of-range. Under this regimen of blanks and system performance samples, approximately eight samples can be collected and analyzed in a three hour visit to each sampling location.

10.3 Method Precision and Accuracy

The purpose of the analytical approach outlined in this method is to provide presumptive information regarding the presence of selected VOCs emissions. In this context, precision and accuracy are to be determined. However, quality assurance criteria are described in Section 10.2 which insure the samples collected represent the ambient environment.

10.4 Range and Limits of Detection

The range and limits of detection of this method are highly compound dependent due to large differences in response of the portable GCs photoionization detector to the various target compounds. Aromatic compounds and olefinic halogenated compounds will be detected at lower levels than the halomethanes or aliphatic hydrocarbons. The concentration range of application of this method is approximately two orders of magnitude.

TABLE B-1. ESTIMATED LIMITS OF DETECTION (LOD) FOR SELECTED VOCs BASED ON 1 μL SAMPLE VOLUME

Compound	LOD (ng)	LOD (ppb)
Chloroform[1]	2	450
1,1,1-Trichloroethane[1]	2	450
Carbon tetrachloride[1]	2	450
Benzene	.006	2
1,2-Dichloroethane[2]	.05	14
Trichloroethylene[2]	.05	14
Tetrachloroethylene[2]	.05	14
1,2-Dibromoethane	.02	2
p-Xylene[3]	.02	4
m-Xylene[3]	.02	4
o-Xylene[4]	.01	3
Styrene[4]	.01	3

[1]Chloroform, 1,1,1-trichloroethane, and carbon tetrachloride coelute on 0.66-m 3% SP2100.
[2]1,2-Dichloroethane, tricholroethylene, and tetrachloroethylene coelute on 0.66-m 3% SP2100.
[3]p-Xylene and m-xylene coelute on 0.66-m 3% SP2100.
[4]Styrene and o-xylene coelute on 0.66-m 3% SP2100.

TABLE B-2. LIST OF COMMERCIALLY AVAILABLE PORTABLE VOC INSTRUMENT MANUFACTURERS

Viking Instruments Corporation 3800 Concorde Parkway Chantilly, VA 22021 Phone (703) 968-0101 FAX (703) 968-0166	Photovac International Inc. 25-B Jefryn Boulevard Deer Park, NY 11729 Phone (516) 254-4199 FAX (516) 254-4284
MSA Baseline North Star Route PO Box 649 Lyons, CO 80540 Phone (303) 823-6661 FAX (303) 823-5151	SRI Instruments Inc. 3882 Del Amo Boulevard Suite 601 Torrance, CA 90503 Phone (310) 214-5092 FAX (310) 214-5097
MTI Analytical Instruments 41762 Christy Street Fremont, CA 94538 Phone (510) 490-0900 FAX (510) 651-2498	Sentex Sensing Technology 552 Broad Avenue Ridgefield, NJ 07657 Phone (201) 945-3694 FAX (201) 941-6064
CMS Research Corporation 200 Chase Park South, Suite 100 Birmingham, AL 35244 Phone (205) 733-6910 FAX (205) 733-6919	HNU Systems Inc. 160 Charlemont Street Newton Highlands, MA 021161-9987 Phone (617) 964-6690 FAX (617) 965-5812
Microsensor Systems Inc. 62 Corporate Court Bowling Green, KY 42104 Phone (502) 745-0099 FAX (502) -	

TABLE B-3. PORTABLE GAS CHROMATOGRAPH SAMPLING DATA SHEET

DATE: _____ LOCATION: _____ TIME: _____

CHROMATOGRAPHIC CONDITIONS: _____

COLUMN 1: COLUMN TYPE:

I.D. (mm): _____ LENGTH (mm): _____ FLOW (mL/min): _____

COLUMN 2: COLUMN TYPE:

I.D. (mm): _____ LENGTH (mm): _____ FLOW (mL/min): _____

INJ. NO.	INJ. VOL.	COLUMN NO.	SETTING	LOCATION

SITE PLAN (indicate sampling locations):

_____ _____

DATE SIGNATURE

TABLE B-4. SYSTEM PERFORMANCE CRITERIA FOR PORTABLE GC[1]

Criteria	Test Compound	Acceptable Range	Suggested Corrective Action
PID Response	Trichloroethylene	$\geq 10^8$ uV-sec/ng	Re-tune or replace lamp
Elution Time	Styrene	2.65 ± 0.15 min	Inspect for leaks, adjust carrier flow
Resolution[2]	Benzene/Trichloro-ethylene	≥ 1.4	Replace column

[1]Based on analysis of a vapor mixture of benzene, styrene, and trichloroethylene.
[2]Define by: R + = $2d/(W_1+W_2)$; where d = distance between the peaks and W = peak width at base.

TABLE B-5. ESTIMATED LIMITS OF DETECTION (LOD) FOR SELECTED VOCs

Compound	LOD (ng)	LOD (ppb)
Chloroform[1]	2	450
1,1,1-Trichloroethane[1]	2	450
Carbon tetrachloride[1]	2	450
Benzene	.006	2
1,2-Dichloroethane[2]	.05	14
Trichloroethylene[2]	.05	14
Tetrachloroethylene[2]	.05	14
1,2-Dibromoethane	.02	2
p-Xylene[3]	.02	4
m-Xylene[3]	.02	4
o-Xylene[4]	.01	3
Styrene[4]	.01	3

[1]Chloroform, 1,1,1-trichloroethane, and carbon tetrachloride coelute on 0.66-m 3% SP2100.
[2]1,2-Dichloroethane, tricholroethylene, and tetrachloroethylene coelute on 0.66-m 3% SP2100.
[3]p-Xylene and m-xylene coelute on 0.66-m 3% SP2100.
[4]Styrene and o-xylene coelute on 0.66-m 3% SP2100.

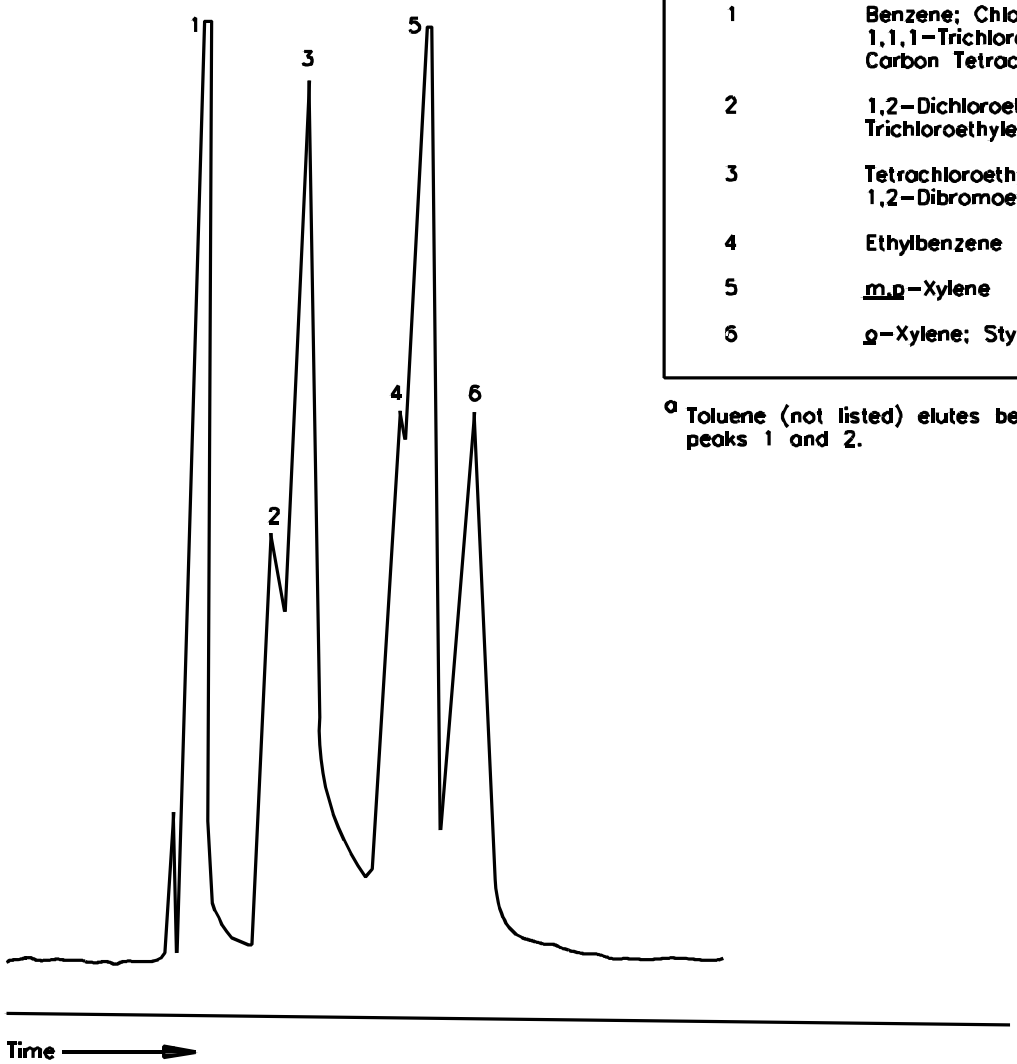

Peak Assignments for Standard Mixtures

Peak No.	Compound(s)[a]
1	Benzene; Chloroform; 1,1,1-Trichloroethane; Carbon Tetrachloride
2	1,2-Dichloroethane; Trichloroethylene
3	Tetrachloroethylene; 1,2-Dibromoethane
4	Ethylbenzene
5	m,p-Xylene
6	o-Xylene; Styrene

[a] Toluene (not listed) elutes between peaks 1 and 2.

Figure B-1. Typical chromatogram of VOCs determined by a portable GC.

Appendix C

Installation And Operation Procedures For U.S. Environmental Protection Agency's Urban Air Toxic Monitoring Program Sampler

1. Scope

1.1 The subatmospheric sampling system described in this method was designed specifically for use in USEPA's Urban Air Toxic Monitoring Program (UATMP) to provide analytical support to the states in their assessment of potential health risks from certain toxic organic compounds that may be present in urban atmospheres.

1.2 The sampler is based on the collection of whole air samples in 6-liter, specially prepared passivated stainless steel canisters. The sampler features electronic timer for ease, accuracy and flexibility of sample period programming, an independently setable presample warm-up and ambient air purge period, protection from loss of sample due to power interruptions, and a self-contained configuration housed in an all-metal portable case, as illustrated in Figure C-1.

1.3 The design of the sampler is pumpless, using an evacuated canister to draw the ambient sample air into itself at a fixed flow rate (3-5 mL/min) controlled by an electronic mass flow controller. Because of the relatively low sample flow rates necessary for the integration periods, auxiliary flushing of the sample inlet line is provided by a small, general-purpose vacuum pump (not in contact with the sample air stream). Further, experience has shown that inlet lines and surfaces sometimes build up or accumulate substantial concentrations of organic materials under stagnant (zero flow rate) conditions. Therefore such lines and surfaces need to be purged and equilibrated to the sample air for some time prior to the beginning of the actual sample collection period. For this reason, the sampler includes dual timers, one of which is set to start the pump several hours prior to the specified start of the sample period to purge the inlet lines and surfaces. As illustrated in Figure C-1, sample air drawn into the canister passes through only four components: the heated inlet line, a 2-micron particulate filter, the electron flow controller, and the latching solenoid valve.

2. Summary of Method

2.1 In operation, timer 1 is set to start the pump about 6 hours before the scheduled sample period. The pump draws sample air in through the sample inlet and particulate filter to purge and equilibrate these components, at a flow rate limited by the capillary to approximately 100 mL/min. Timer 1 also energizes the heated inlet line to allow it to come up to its controlled temperature of 65 to 70 degrees C, and turns on the flow controller to allow it to stabilize. The pump draws additional sample air through the flow controller by way of the normally open port of the 3-way solenoid valve. This flow purges the flow controller and allows it to achieve a stable controlled flow at the specified sample flow rate prior to the sample period.

2.2 At the scheduled start of the sample period, timer 2 is set to activate both solenoid valves. When activated, the 3-way solenoid valve closes its normally open port to stop the flow controller purge flow and opens its normally closed port to start flow through the aldehyde sample cartridges. Simultaneously, the latching solenoid valve opens to start sample flow through into the canister.

2.3 At the end of the sample period, timer 2 closes the latching solenoid valve to stop the sample flow and seal the sample in the canister and also de-energizes the pump, flow controller, 3-way solenoid, and heated inlet line. During operation, the pump and sampler are located external to the sampler. The 2.4 meter (~8 foot) heated inlet line is installed through the outside wall, with most of its length outside and terminated externally with an inverted glass funnel to exclude precipitation. The indoor end is terminated in a stainless steel cross fitting to provide connections for the canister sample and the two optional formaldehyde cartridge samples.

3. Sampler Installation

3.1 The sampler must be operated indoors with the temperature between 20-32°C (~68 to 90°F). The sampler case should be located conveniently on a table, shelf, or other flat surface. Access to a source of 115 vac line power (500 watts/min) is also required. The pump is removed from the sampler case and located remotely from the sampler (connected with a 1/4 inch O.D. extension tubing and a suitable electrical extension cord).

3.2 Electrical Connections (~Figure C-1)

3.2.1 The sampler cover is removed. The sampler is not plugged into the 115 vac power until all other electrical connections are completed.

3.2.2 The pump is plugged into its power connector (if not already connected) and the battery connectors are snapped onto the battery packs on the covers of both timers.

3.2.3 The sampler power plug is inserted into a 115 volts ac line grounded receptacle. The sampler must be grounded for operator safety. The electrical wires are routed and tied so they remain out of the way.

3.3 Pneumatic Connections

3.3.1 The length of 1/16 inch O.D. stainless steel tubing is connected from port A of the sampler (on the right side of the flow controller module) to the air inlet line.

3.3.2 The pump is connected to the sampler with 1/4 inch O.D. plastic tubing. This tubing may be up to 7 meters (~20 feet) long. A short length of tubing is installed to reduce pump noise. All tubing is conveniently routed and, if necessary, tied in place.

4. Sampler Preparation

4.1 Canister

4.1.1 The sample canister is installed no more than 2 days before the scheduled sampling day.

4.1.2 With timer #1 ON, the flow controller is allowed to warm up for at least 15 minutes, longer if possible.

4.1.3 An evacuated canister is connected to one of the short lengths of 1/8 inch O.D. stainless steel tubing from port B (solenoid valve) of the sampler. The canister valve is left closed. The Swagelock® fitting on the canister must not be cross-threaded. The connection is tightened snugly with a wrench.

4.1.4 The end of the other length of stainless steel tubing from port B (solenoid valve) is connected with a Swagelock® plug.

4.1.5 If duplicate canisters are to be sampled, the plug is removed from the second 1/8 inch O.D. stainless steel tubing from port B (solenoid valve) and the second canister is connected. The canister valve is left closed.

4.1.6 The ON button of timer #2 is pressed. The flow through the flow controller should be stopped by this action.

4.1.7 The flow controller switch is turned to "READ" and the zero flow reading is obtained. If this reading is not stable, wait until the reading is stabilized.

4.1.8 The flow controller switch is turned to "SET" and the flow setting is adjusted to the algebraic SUM of the most recent entry on Table C-1 and the zero reading obtained in step 4.1.7 (If the zero reading is negative, SUBTRACT the zero reading from the Table C-1 value). Be sure to use the correct Table C-1 flow value for one or two canisters, as appropriate.

[Note: If the analytical laboratory determines that the canister sample pressure is too low or too high, a new flow setting or settings will be issued for the sampler. The new flow setting should be recorded in Table C-1 and used until superseded by new settings.]

4.1.9 Timer #2 is turned OFF to again start the flow through the flow controller. With the pump (timer #1) ON and the sampling valve (timer #2) OFF, the flow controller is turned to "READ" and the flow is verified to be the same as the flow setting made in Section 4.1.8. If not, the flow setting is rechecked in Section 4.1.8 and the flow setting is readjusted if necessary.

4.1.10 The OFF button of timer #1 is pressed to stop the pump.

4.1.11 The canister valve(s) are fully opened.

4.2 Timers

4.2.1 Timer #2 is set to turn ON at the scheduled ON time for the sample period, and OFF at the scheduled OFF time (see the subsequent section on setting the timers). Normal ON time: 12:00 AM on the scheduled sampling day. Normal OFF time: 11:59 PM on the scheduled sampling day. The OFF time is 11:59 PM instead of 12:00 AM so that the day number for the OFF time is the same as the day number for the ON time. Be sure to set the correct day number.

4.2.2 Timer #1 is set to turn ON six (6) hours before the beginning of the scheduled sample period and OFF at the scheduled OFF time for the sample period (same OFF time as for timer #2). See the subsequent section on setting the timers. Normal ON time: 06:00 PM on the day prior to the scheduled sampling day. Normal OFF time: 11:59 PM on the scheduled sampling day.

[Note: The timers are wired so that the pump will be on whenever either timer is on. Thus the pump will run if timer #2 is ON even if timer #1 is OFF.]

4.2.3 The elapsed time meter is set to 0.

4.3 Sampler Check

4.3.1 The following must be verified before leaving the sampling site:

(1) Canister(s) is (are) connected properly and the unused connection is capped if only one canister is used.
(2) Canister valve(s) is (are) opened.
(3) Both timers are programmed correctly for the scheduled sample period.
(4) Both timers are set to "AUTO".
(5) Both timers are initially OFF.

(6) Both timers are set to the correct current time of day and day number.
(7) Elapsed time meter is set to 0.

4.4 Sampler Recovery (Post Sampling)

4.4.1 The valve on the canister is closed.

4.4.2 The canister is disconnected from the sampler, the sample data sheet is completed, and the canister is prepared for shipment to the analytical laboratory.

4.4.3 If two canisters were sampled, Section 2.4.2 is repeated for the other canisters.

5. Timer Setting

Since the timers are 7-day timers, the days of the week are numbered from 1 to 7. The assignment of day numbers to days of the week is indicated on the timer keypad: 1 = Sunday, 2 = Monday, 3 = Tuesday, 4 = Wednesday, 5 = Thursday, 6 = Friday, and 7 = Saturday. This programming is quite simple, but some timers may malfunction or operate erratically if not programmed exactly right. To assure correct operation, the timers should be reset and completely reprogrammed "from scratch" for each sample. The correct current time of day is re-entered to reprogram the timer. Any program in the timer's memory is erased by resetting the timer (pressing the reset button). The timer is set by the following:

(1) pressing the reset button,
(2) entering the correct day number and time of day,
(3) entering the ON and OFF times for the sample period, and
(4) verifying that the ON and OFF time settings are correct.

5.1 Timer Reset

The timer reset button is pressed, which is recessed in a small hole just above the LED (light emitting diode) indicator light. A small object that will fit through the hole, such as a pencil, match, or pen is used to press the timer. After reset, the timer display should show |1| |10:00|.

[Note: The timers may operate erratically when the batteries are discharged, which happens when the sampler is unplugged or without power for several hours. When the sampler is again powered up, several hours may be required to recharge the batteries. To avoid discharging the batteries, the battery pack should be disconnected from the timer when the sampler is unplugged.]

5.2 Date and Time Entry

The selector switch is turned to SET and the number button corresponding to the day number is pressed. For example, a "2" is pressed for Monday. The current time of day is entered. For example, if the time is 9:00 AM, 900 is pressed. AM or PM is pressed as applicable. Display should show |2| |'9:00| for 9:00 AM Monday.

[Note: ' indicates AM and , indicates PM.]

The CLOCK button is pressed. Display should show |-| |--:--|. If an error is made, |E| |EE:EE| is shown on the display. The CLEAR button is pressed and the above steps are repeated. The selector switch is turned to AUTO or MAN to verify correct time setting.

5.3 ON and OFF Entry

The selector switch is turned to SET. The ON and OFF program is entered in the following order: day, number, time, AM or PM, ON or OFF. (Example: To turn ON at 12:00 AM on day 5 (Thursday); 5, 1200, AM, ON is entered). (Example: To turn OFF at 11:59 PM on day 5 (Thursday); 5, 11:59, PM, OFF is entered.) If the display indicates an error (|E| |EE:EE|), the timer is reset. The selector switch is turned to AUTO.

5.4 ON and OFF Verification

5.4.1 The selector switch is turned to REVIEW. The number of the scheduled sample day is pressed. ON is pressed. The display should show the time of the beginning of the sample period (for example, |5| |'12:00|). [' indicates AM.] ON is pressed again. The display should show |5| |--:--|, indicating no other ON times are programmed.

5.4.2 OFF is pressed. The display should show the time of the end of the sample period, (for example, |5| |, 11:59|). PM is indicated by the "," mark before the time. OFF is pressed again. The display should show |5| |--:--|, indicating no other OFF times are programmed. The selector is switched to AUTO. If anything is incorrect, the timer is reset and reprogrammed.

TABLE C-1. NET FLOW CONTROLLER SETTING

DATE	1 CANISTER	2 CANISTERS

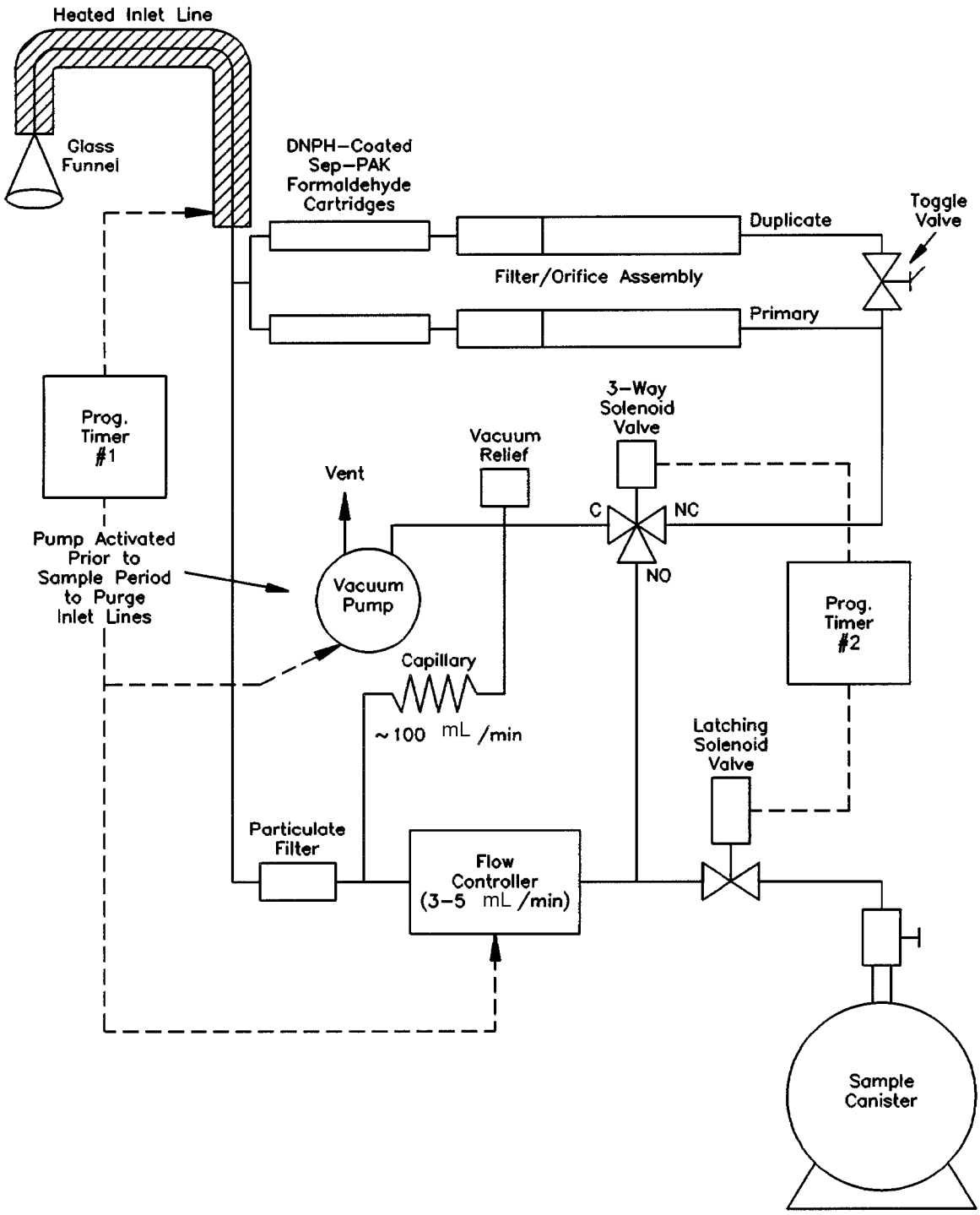

Figure C-1. Example of EPA's UATMP air sampler.

EPA/625/R-96/010b

Compendium of Methods for the Determination of Toxic Organic Compounds in Ambient Air

Second Edition

Compendium Method TO-15

Determination Of Volatile Organic Compounds (VOCs) In Air Collected In Specially-Prepared Canisters And Analyzed By Gas Chromatography/ Mass Spectrometry (GC/MS)

Center for Environmental Research Information
Office of Research and Development
U.S. Environmental Protection Agency
Cincinnati, OH 45268

January 1999

Method TO-15
Acknowledgements

This Method was prepared for publication in the *Compendium of Methods for the Determination of Toxic Organic Compounds in Ambient Air, Second Edition* (EPA/625/R-96/010b), which was prepared under Contract No. 68-C3-0315, WA No. 3-10, by Midwest Research Institute (MRI), as a subcontractor to Eastern Research Group, Inc. (ERG), and under the sponsorship of the U.S. Environmental Protection Agency (EPA). Justice A. Manning, John O. Burckle, and Scott Hedges, Center for Environmental Research Information (CERI), and Frank F. McElroy, National Exposure Research Laboratory (NERL), all in the EPA Office of Research and Development, were responsible for overseeing the preparation of this method. Additional support was provided by other members of the Compendia Workgroup, which include:

- John O. Burckle, EPA, ORD, Cincinnati, OH
- James L. Cheney, Corps of Engineers, Omaha, NB
- Michael Davis, U.S. EPA, Region 7, KC, KS
- Joseph B. Elkins Jr., U.S. EPA, OAQPS, RTP, NC
- Robert G. Lewis, U.S. EPA, NERL, RTP, NC
- Justice A. Manning, U.S. EPA, ORD, Cincinnati, OH
- William A. McClenny, U.S. EPA, NERL, RTP, NC
- Frank F. McElroy, U.S. EPA, NERL, RTP, NC
- Heidi Schultz, ERG, Lexington, MA
- William T. "Jerry" Winberry, Jr., EnviroTech Solutions, Cary, NC

This Method is the result of the efforts of many individuals. Gratitude goes to each person involved in the preparation and review of this methodology.

Author(s)

- William A. McClenny, U.S. EPA, NERL, RTP, NC
- Michael W. Holdren, Battelle, Columbus, OH

Peer Reviewers

- Karen Oliver, ManTech, RTP, NC
- Jim Cheney, Corps of Engineers, Omaha, NB
- Elizabeth Almasi, Varian Chromatography Systems, Walnut Creek, CA
- Norm Kirshen, Varian Chromatography Systems, Walnut Creek, CA
- Richard Jesser, Graseby, Smyrna, GA
- Bill Taylor, Graseby, Smyrna, GA
- Lauren Drees, U.S. EPA, NRMRL, Cincinnati, OH

Finally, recognition is given to Frances Beyer, Lynn Kaufman, Debbie Bond, Cathy Whitaker, and Kathy Johnson of Midwest Research Institute's Administrative Services staff whose dedication and persistence during the development of this manuscript has enabled it's production.

DISCLAIMER

This Compendium has been subjected to the Agency's peer and administrative review, and it has been approved for publication as an EPA document. Mention of trade names or commercial products does not constitute endorsement or recommendation for use.

METHOD TO-15

Determination of Volatile Organic Compounds (VOCs) In Air Collected In Specially-Prepared Canisters And Analyzed By Gas Chromatography/ Mass Spectrometry (GC/MS)

TABLE OF CONTENTS

		Page
1.	Scope	15-1
2.	Summary of Method	15-2
3.	Significance	15-3
4.	Applicable Documents	15-4
	4.1 ASTM Standards	15-4
	4.2 EPA Documents	15-4
5.	Definitions	15-4
6.	Interferences and Contamination	15-6
7.	Apparatus and Reagents	15-6
	7.1 Sampling Apparatus	15-6
	7.2 Analytical Apparatus	15-8
	7.3 Calibration System and Manifold Apparatus	15-10
	7.4 Reagents	15-10
8.	Collection of Samples in Canisters	15-10
	8.1 Introduction	15-10
	8.2 Sampling System Description	15-11
	8.3 Sampling Procedure	15-12
	8.4 Cleaning and Certification Program	15-14
9.	GC/MS Analysis of Volatiles from Canisters	15-16
	9.1 Introduction	15-16
	9.2 Preparation of Standards	15-17
10.	GC/MS Operating Conditions	15-21
	10.1 Preconcentrator	15-21
	10.2 GC/MS System	15-22
	10.3 Analytical Sequence	15-22
	10.4 Instrument Performance Check	15-23
	10.5 Initial Calibration	15-23
	10.6 Daily Calibration	15-27
	10.7 Blank Analyses	15-27
	10.8 Sample Analysis	15-28

TABLE OF CONTENTS (continued)

Page

11. Requirements for Demonstrating Method Acceptability for VOC Analysis from Canisters 15-31
    11.1 Introduction 15-31
    11.2 Method Detection Limit 15-31
    11.3 Replicate Precision 15-31
    11.4 Audit Accuracy 15-32

12. References 15-32

METHOD TO-15

Determination of Volatile Organic Compounds (VOCs) In Air Collected In Specially-Prepared Canisters And Analyzed By Gas Chromatography/ Mass Spectrometry (GC/MS)

1. Scope

1.1 This method documents sampling and analytical procedures for the measurement of subsets of the 97 volatile organic compounds (VOCs) that are included in the 189 hazardous air pollutants (HAPs) listed in Title III of the Clean Air Act Amendments of 1990. VOCs are defined here as organic compounds having a vapor pressure greater than 10^{-1} Torr at 25°C and 760 mm Hg. Table 1 is the list of the target VOCs along with their CAS number, boiling point, vapor pressure and an indication of their membership in both the list of VOCs covered by Compendium Method TO-14A (1) and the list of VOCs in EPA's Contract Laboratory Program (CLP) document entitled: *Statement-of-Work (SOW) for the Analysis of Air Toxics from Superfund Sites (2)*.

Many of these compounds have been tested for stability in concentration when stored in specially-prepared canisters (see Section 8) under conditions typical of those encountered in routine ambient air analysis. The stability of these compounds under all possible conditions is not known. However, a model to predict compound losses due to physical adsorption of VOCs on canister walls and to dissolution of VOCs in water condensed in the canisters has been developed (3). Losses due to physical adsorption require only the establishment of equilibrium between the condensed and gas phases and are generally considered short term losses, (i.e., losses occurring over minutes to hours). Losses due to chemical reactions of the VOCs with cocollected ozone or other gas phase species also account for some short term losses. Chemical reactions between VOCs and substances inside the canister are generally assumed to cause the gradual decrease of concentration over time (i.e., long term losses over days to weeks). Loss mechanisms such as aqueous hydrolysis and biological degradation (4) also exist. No models are currently known to be available to estimate and characterize all these potential losses, although a number of experimental observations are referenced in Section 8. Some of the VOCs listed in Title III have short atmospheric lifetimes and may not be present except near sources.

1.2 This method applies to ambient concentrations of VOCs above 0.5 ppbv and typically requires VOC enrichment by concentrating up to one liter of a sample volume. The VOC concentration range for ambient air in many cases includes the concentration at which continuous exposure over a lifetime is estimated to constitute a 10^{-6} or higher lifetime risk of developing cancer in humans. Under circumstances in which many hazardous VOCs are present at 10^{-6} risk concentrations, the total risk may be significantly greater.

1.3 This method applies under most conditions encountered in sampling of ambient air into canisters. However, the composition of a gas mixture in a canister, under unique or unusual conditions, will change so that the sample is known not to be a true representation of the ambient air from which it was taken. For example, low humidity conditions in the sample may lead to losses of certain VOCs on the canister walls, losses that would not happen if the humidity were higher. If the canister is pressurized, then condensation of water from high humidity samples may cause fractional losses of water-soluble compounds. Since the canister surface area is limited, all gases are in competition for the available active sites. Hence an absolute storage stability cannot be assigned to a specific gas. Fortunately, under conditions of normal usage for sampling ambient air, most VOCs can be recovered from canisters near their original concentrations after storage times of up to thirty days (see Section 8).

1.4 Use of the Compendium Method TO-15 for many of the VOCs listed in Table 1 is likely to present two difficulties: (1) what calibration standard to use for establishing a basis for testing and quantitation, and (2) how

to obtain an audit standard. In certain cases a chemical similarity exists between a thoroughly tested compound and others on the Title III list. In this case, what works for one is likely to work for the other in terms of making standards. However, this is not always the case and some compound standards will be troublesome. The reader is referred to the Section 9.2 on standards for guidance. Calibration of compounds such as formaldehyde, diazomethane, and many of the others represents a challenge.

1.5 Compendium Method TO-15 should be considered for use when a subset of the 97 Title III VOCs constitute the target list. Typical situations involve ambient air testing associated with the permitting procedures for emission sources. In this case sampling and analysis of VOCs is performed to determine the impact of dispersing source emissions in the surrounding areas. Other important applications are prevalence and trend monitoring for hazardous VOCs in urban areas and risk assessments downwind of industrialized or source-impacted areas.

1.6 Solid adsorbents can be used in lieu of canisters for sampling of VOCs, provided the solid adsorbent packings, usually multisorbent packings in metal or glass tubes, can meet the performance criteria specified in Compendium Method TO-17 which specifically addresses the use of multisorbent packings. The two sample collection techniques are different but become the same upon movement of the sample from the collection medium (canister or multisorbent tubes) onto the sample concentrator. Sample collection directly from the atmosphere by automated gas chromatographs can be used in lieu of collection in canisters or on solid adsorbents.

2. Summary of Method

2.1 The atmosphere is sampled by introduction of air into a specially-prepared stainless steel canister. Both subatmospheric pressure and pressurized sampling modes use an initially evacuated canister. A pump ventilated sampling line is used during sample collection with most commercially available samplers. Pressurized sampling requires an additional pump to provide positive pressure to the sample canister. A sample of air is drawn through a sampling train comprised of components that regulate the rate and duration of sampling into the pre-evacuated and passivated canister.

2.2 After the air sample is collected, the canister valve is closed, an identification tag is attached to the canister, and the canister is transported to the laboratory for analysis.

2.3 Upon receipt at the laboratory, the canister tag data is recorded and the canister is stored until analysis. Storage times of up to thirty days have been demonstrated for many of the VOCs (5).

2.4 To analyze the sample, a known volume of sample is directed from the canister through a solid multisorbent concentrator. A portion of the water vapor in the sample breaks through the concentrator during sampling, to a degree depending on the multisorbent composition, duration of sampling, and other factors. Water content of the sample can be further reduced by dry purging the concentrator with helium while retaining target compounds. After the concentration and drying steps are completed, the VOCs are thermally desorbed, entrained in a carrier gas stream, and then focused in a small volume by trapping on a reduced temperature trap or small volume multisorbent trap. The sample is then released by thermal desorption and carried onto a gas chromatographic column for separation.

As a simple alternative to the multisorbent/dry purge water management technique, the amount of water vapor in the sample can be reduced below any threshold for affecting the proper operation of the analytical system by

reducing the sample size. For example, a small sample can be concentrated on a cold trap and released directly to the gas chromatographic column. The reduction in sample volume may require an enhancement of detector sensitivity.

Other water management approaches are also acceptable as long as their use does not compromise the attainment of the performance criteria listed in Section 11. A listing of some commercial water management systems is provided in Appendix A. One of the alternative ways to dry the sample is to separate VOCs from condensate on a low temperature trap by heating and purging the trap.

2.5 The analytical strategy for Compendium Method TO-15 involves using a high resolution gas chromatograph (GC) coupled to a mass spectrometer. If the mass spectrometer is a linear quadrupole system, it is operated either by continuously scanning a wide range of mass to charge ratios (SCAN mode) or by monitoring select ion monitoring mode (SIM) of compounds on the target list. If the mass spectrometer is based on a standard ion trap design, only a scanning mode is used (note however, that the Selected Ion Storage (SIS) mode for the ion trap has features of the SIM mode). Mass spectra for individual peaks in the total ion chromatogram are examined with respect to the fragmentation pattern of ions corresponding to various VOCs including the intensity of primary and secondary ions. The fragmentation pattern is compared with stored spectra taken under similar conditions, in order to identify the compound. For any given compound, the intensity of the primary fragment is compared with the system response to the primary fragment for known amounts of the compound. This establishes the compound concentration that exists in the sample.

Mass spectrometry is considered a more definitive identification technique than single specific detectors such as flame ionization detector (FID), electron capture detector (ECD), photoionization detector (PID), or a multidetector arrangement of these (see discussion in Compendium Method TO-14A). The use of both gas chromatographic retention time and the generally unique mass fragmentation patterns reduce the chances for misidentification. If the technique is supported by a comprehensive mass spectral database and a knowledgeable operator, then the correct identification and quantification of VOCs is further enhanced.

3. Significance

3.1 Compendium Method TO-15 is significant in that it extends the Compendium Method TO-14A description for using canister-based sampling and gas chromatographic analysis in the following ways:

- Compendium Method TO-15 incorporates a multisorbent/dry purge technique or equivalent (see Appendix A) for water management thereby addressing a more extensive set of compounds (the VOCs mentioned in Title III of the CAAA of 1990) than addressed by Compendium Method TO-14A. Compendium Method TO-14A approach to water management alters the structure or reduces the sample stream concentration of some VOCs, especially water-soluble VOCs.
- Compendium Method TO-15 uses the GC/MS technique as the only means to identify and quantitate target compounds. The GC/MS approach provides a more scientifically-defensible detection scheme which is generally more desirable than the use of single or even multiple specific detectors.
- In addition, Compendium Method TO-15 establishes method performance criteria for acceptance of data, allowing the use of alternate but equivalent sampling and analytical equipment. There are several new and viable commercial approaches for water management as noted in Appendix A of this method on which to base a VOC monitoring technique as well as other approaches to sampling (i.e., autoGCs and solid

adsorbents) that are often used. This method lists performance criteria that these alternatives must meet to be acceptable alternatives for monitoring ambient VOCs.

- Finally, Compendium Method TO-15 includes enhanced provisions for inherent quality control. The method uses internal analytical standards and frequent verification of analytical system performance to assure control of the analytical system. This more formal and better documented approach to quality control guarantees a higher percentage of good data.

3.2 With these features, Compendium Method TO-15 is a more general yet better defined method for VOCs than Compendium Method TO-14A. As such, the method can be applied with a higher confidence to reduce the uncertainty in risk assessments in environments where the hazardous volatile gases listed in the Title III of the Clean Air Act Amendments of 1990 are being monitored. An emphasis on risk assessments for human health and effects on the ecology is a current goal for the U.S. EPA.

4. Applicable Documents

4.1 ASTM Standards

- **Method D1356** *Definitions of Terms Relating to Atmospheric Sampling and Analysis*.
- **Method E260** *Recommended Practice for General Gas Chromatography Procedures*.
- **Method E355** *Practice for Gas Chromatography Terms and Relationships*.
- **Method D5466** *Standard Test Method of Determination of Volatile Organic Compounds in Atmospheres (Canister Sampling Methodology)*.

4.2 EPA Documents

- *Quality Assurance Handbook for Air Pollution Measurement Systems, Volume II*, U. S. Environmental Protection Agency, EPA-600/R-94-038b, May 1994.
- *Technical Assistance Document for Sampling and Analysis of Toxic Organic Compounds in Ambient Air*, U. S. Environmental Protection Agency, EPA-600/4-83-027, June 1983.
- *Compendium of Methods for the Determination of Toxic Organic Compounds in Ambient Air: Method TO-14, Second Supplement*, U. S. Environmental Protection Agency, EPA-600/4-89-018, March 1989.
- *Statement-of-Work (SOW) for the Analysis of Air Toxics from Superfund Sites*, U. S. Environmental Protection Agency, Office of Solid Waste, Washington, D.C., Draft Report, June 1990.
- *Clean Air Act Amendments of 1990*, U. S. Congress, Washington, D.C., November 1990.

5. Definitions

[Note: Definitions used in this document and any user-prepared standard operating procedures (SOPs) should be consistent with ASTM Methods D1356, E260, and E355. Aside from the definitions given below, all pertinent abbreviations and symbols are defined within this document at point of use.]

5.1 Gauge Pressure—pressure measured with reference to the surrounding atmospheric pressure, usually expressed in units of kPa or psi. Zero gauge pressure is equal to atmospheric (barometric) pressure.

5.2 Absolute Pressure—pressure measured with reference to absolute zero pressure, usually expressed in units of kPa, or psi.

5.3 Cryogen—a refrigerant used to obtain sub-ambient temperatures in the VOC concentrator and/or on front of the analytical column. Typical cryogens are liquid nitrogen (bp -195.8°C), liquid argon (bp -185.7°C), and liquid CO_2 (bp -79.5°C).

5.4 Dynamic Calibration—calibration of an analytical system using calibration gas standard concentrations in a form identical or very similar to the samples to be analyzed and by introducing such standards into the inlet of the sampling or analytical system from a manifold through which the gas standards are flowing.

5.5 Dynamic Dilution—means of preparing calibration mixtures in which standard gas(es) from pressurized cylinders are continuously blended with humidified zero air in a manifold so that a flowing stream of calibration mixture is available at the inlet of the analytical system.

5.6 MS-SCAN—mass spectrometric mode of operation in which the gas chromatograph (GC) is coupled to a mass spectrometer (MS) programmed to SCAN all ions repeatedly over a specified mass range.

5.7 MS-SIM—mass spectrometric mode of operation in which the GC is coupled to a MS that is programmed to scan a selected number of ions repeatedly [i.e., selected ion monitoring (SIM) mode].

5.8 Qualitative Accuracy—the degree of measurement accuracy required to correctly identify compounds with an analytical system.

5.9 Quantitative Accuracy—the degree of measurement accuracy required to correctly measure the concentration of an identified compound with an analytical system with known uncertainty.

5.10 Replicate Precision—precision determined from two canisters filled from the same air mass over the same time period and determined as the absolute value of the difference between the analyses of canisters divided by their average value and expressed as a percentage (see Section 11 for performance criteria for replicate precision).

5.11 Duplicate Precision—precision determined from the analysis of two samples taken from the same canister. The duplicate precision is determined as the absolute value of the difference between the canister analyses divided by their average value and expressed as a percentage.

5.12 Audit Accuracy—the difference between the analysis of a sample provided in an audit canister and the nominal value as determined by the audit authority, divided by the audit value and expressed as a percentage (see Section 11 for performance criteria for audit accuracy).

6. Interferences and Contamination

6.1 Very volatile compounds, such as chloromethane and vinyl chloride can display peak broadening and co-elution with other species if the compounds are not delivered to the GC column in a small volume of carrier gas. Refocusing of the sample after collection on the primary trap, either on a separate focusing trap or at the head of the gas chromatographic column, mitigates this problem.

6.2 Interferences in canister samples may result from improper use or from contamination of: (1) the canisters due to poor manufacturing practices, (2) the canister cleaning apparatus, and (3) the sampling or analytical system. Attention to the following details will help to minimize the possibility of contamination of canisters.

6.2.1 Canisters should be manufactured using high quality welding and cleaning techniques, and new canisters should be filled with humidified zero air and then analyzed, after "aging" for 24 hours, to determine cleanliness. The cleaning apparatus, sampling system, and analytical system should be assembled of clean, high quality components and each system should be shown to be free of contamination.

6.2.2 Canisters should be stored in a contaminant-free location and should be capped tightly during shipment to prevent leakage and minimize any compromise of the sample.

6.2.3 Impurities in the calibration dilution gas (if applicable) and carrier gas, organic compounds out-gassing from the system components ahead of the trap, and solvent vapors in the laboratory account for the majority of contamination problems. The analytical system must be demonstrated to be free from contamination under the conditions of the analysis by running humidified zero air blanks. The use of non-chromatographic grade stainless steel tubing, non-PTFE thread sealants, or flow controllers with Buna-N rubber components must be avoided.

6.2.4 Significant contamination of the analytical equipment can occur whenever samples containing high VOC concentrations are analyzed. This in turn can result in carryover contamination in subsequent analyses. Whenever a high concentration (>25 ppbv of a trace species) sample is encountered, it should be followed by an analysis of humid zero air to check for carry-over contamination.

6.2.5 In cases when solid sorbents are used to concentrate the sample prior to analysis, the sorbents should be tested to identify artifact formation (see Compendium Method TO-17 for more information on artifacts).

7. Apparatus and Reagents

[Note: Compendium Method To-14A list more specific requirements for sampling and analysis apparatus which may be of help in identifying options. The listings below are generic.]

7.1 Sampling Apparatus

[Note: Subatmospheric pressure and pressurized canister sampling systems are commercially available and have been used as part of U.S. Environmental Protection Agency's Toxic Air Monitoring Stations (TAMS), Urban Air Toxic Monitoring Program (UATMP), the non-methane organic compound (NMOC) sampling and analysis program, and the Photochemical Assessment Monitoring Stations (PAMS).]

7.1.1 Subatmospheric Pressure (see Figure 1, without metal bellows type pump).

7.1.1.1 Sampling Inlet Line. Stainless steel tubing to connect the sampler to the sample inlet.

7.1.1.2 Sample Canister. Leak-free stainless steel pressure vessels of desired volume (e.g., 6 L), with valve and specially prepared interior surfaces (see Appendix B for a listing of known manufacturers/resellers of canisters).

7.1.1.3 Stainless Steel Vacuum/Pressure Gauges. Two types are required, one capable of measuring vacuum (–100 to 0 kPa or 0 to - 30 in Hg) and pressure (0–206 kPa or 0–30 psig) in the sampling system and a second type (for checking the vacuum of canisters during cleaning) capable of measuring at 0.05 mm Hg (see Appendix B) within 20%. Gauges should be tested clean and leak tight.

7.1.1.4 Electronic Mass Flow Controller. Capable of maintaining a constant flow rate (± 10%) over a sampling period of up to 24 hours and under conditions of changing temperature (20–40°C) and humidity.

7.1.1.5 Particulate Matter Filter. 2-μm sintered stainless steel in-line filter.

7.1.1.6 Electronic Timer. For unattended sample collection.

7.1.1.7 Solenoid Valve. Electrically-operated, bi-stable solenoid valve with Viton® seat and O-rings. A Skinner Magnelatch valve is used for purposes of illustration in the text (see Figure 2).

7.1.1.8 Chromatographic Grade Stainless Steel Tubing and Fittings. For interconnections. All such materials in contact with sample, analyte, and support gases prior to analysis should be chromatographic grade stainless steel or equivalent.

7.1.1.9 Thermostatically Controlled Heater. To maintain above ambient temperature inside insulated sampler enclosure.

7.1.1.10 Heater Thermostat. Automatically regulates heater temperature.

7.1.1.11 Fan. For cooling sampling system.

7.1.1.12 Fan Thermostat. Automatically regulates fan operation.

7.1.1.13 Maximum-Minimum Thermometer. Records highest and lowest temperatures during sampling period.

7.1.1.14 Stainless Steel Shut-off Valve. Leak free, for vacuum/pressure gauge.

7.1.1.15 Auxiliary Vacuum Pump. Continuously draws air through the inlet manifold at 10 L/min. or higher flow rate. Sample is extracted from the manifold at a lower rate, and excess air is exhausted.

[Note: The use of higher inlet flow rates dilutes any contamination present in the inlet and reduces the possibility of sample contamination as a result of contact with active adsorption sites on inlet walls.]

7.1.1.16 Elapsed Time Meter. Measures duration of sampling.

7.1.1.17 Optional Fixed Orifice, Capillary, or Adjustable Micrometering Valve. May be used in lieu of the electronic flow controller for grab samples or short duration time-integrated samples. Usually appropriate only in situations where screening samples are taken to assess future sampling activity.

7.1.2 Pressurized (see Figure 1 with metal bellows type pump and Figure 3).

7.1.2.1 Sample Pump. Stainless steel, metal bellows type, capable of 2 atmospheres output pressure. Pump must be free of leaks, clean, and uncontaminated by oil or organic compounds.

[Note: An alternative sampling system has been developed by Dr. R. Rasmussen, The Oregon Graduate Institute of Science and Technology, 20000 N.W. Walker Rd., Beaverton, Oregon 97006, 503-690-1077, and is illustrated in Figure 3. This flow system uses, in order, a pump, a mechanical flow regulator, and a mechanical compensation flow restrictive device. In this configuration the pump is purged with a large sample flow, thereby eliminating the need for an auxiliary vacuum pump to flush the sample inlet.]

7.1.2.2 Other Supporting Materials. All other components of the pressurized sampling system are similar to components discussed in Sections 7.1.1.1 through 7.1.1.17.

7.2 Analytical Apparatus

7.2.1 Sampling/Concentrator System (many commercial alternatives are available).

7.2.1.1 Electronic Mass Flow Controllers. Used to maintain constant flow (for purge gas, carrier gas and sample gas) and to provide an analog output to monitor flow anomalies.

7.2.1.2 Vacuum Pump. General purpose laboratory pump, capable of reducing the downstream pressure of the flow controller to provide the pressure differential necessary to maintain controlled flow rates of sample air.

7.2.1.3 Stainless Steel Tubing and Stainless Steel Fittings. Coated with fused silica to minimize active adsorption sites.

7.2.1.4 Stainless Steel Cylinder Pressure Regulators. Standard, two-stage cylinder regulators with pressure gauges.

7.2.1.5 Gas Purifiers. Used to remove organic impurities and moisture from gas streams.

7.2.1.6 Six-port Gas Chromatographic Valve. For routing sample and carrier gas flows.

7.2.1.7 Multisorbent Concentrator. Solid adsorbent packing with various retentive properties for adsorbing trace gases are commercially available from several sources. The packing contains more than one type of adsorbent packed in series.

7.2.1.7.1A pre-packed adsorbent trap (Supelco 2-0321) containing 200 mg Carbopack B (60/80 mesh) and 50 mg Carbosieve S-III (60/80 mesh) has been found to retain VOCs and allow some water vapor to pass through (6). The addition of a dry purging step allows for further water removal from the adsorbent trap. The steps constituting the dry purge technique that are normally used with multisorbent traps are illustrated in Figure 4. The optimum trapping and dry purging procedure for the Supelco trap consists of a sample volume of 320 mL and a dry nitrogen purge of 1300 mL. Sample trapping and drying is carried out at 25°C. The trap is back-flushed with helium and heated to 220°C to transfer material onto the GC column. A trap bake-out at 260°C for 5 minutes is conducted after each run.

7.2.1.7.2 An example of the effectiveness of dry purging is shown in Figure 5. The multisorbent used in this case is Tenax/Ambersorb 340/Charcoal (7). Approximately 20% of the initial water content in the sample remains after sampling 500 mL of air. The detector response to water vapor (hydrogen atoms detected by atomic emission detection) is plotted versus purge gas volume. Additional water reduction by a factor of 8 is indicated at temperatures of 45°C or higher. Still further water reduction is possible using a two-stage concentration/dryer system.

7.2.1.8 Cryogenic Concentrator. Complete units are commercially available from several vendor sources. The characteristics of the latest concentrators include a rapid, "ballistic" heating of the concentrator to release any trapped VOCs into a small carrier gas volume. This facilitates the separation of compounds on the gas chromatographic column.

7.2.2 Gas Chromatographic/Mass Spectrometric (GC/MS) System.

7.2.2.1 Gas Chromatograph. The gas chromatographic (GC) system must be capable of temperature programming. The column oven can be cooled to subambient temperature (e.g., -50°C) at the start of the gas chromatographic run to effect a resolution of the very volatile organic compounds. In other designs, the rate of release of compounds from the focusing trap in a two stage system obviates the need for retrapping of compounds on the column. The system must include or be interfaced to a concentrator and have all required accessories including analytical columns and gases. All GC carrier gas lines must be constructed from stainless steel or copper tubing. Non-polytetrafluoroethylene (PTFE) thread sealants or flow controllers with Buna-N rubber components must not be used.

7.2.2.2 Chromatographic Columns. 100% methyl silicone or 5% phenyl, 95% methyl silicone fused silica capillary columns of 0.25- to 0.53-mm I.D. of varying lengths are recommended for separation of many of the possible subsets of target compounds involving nonpolar compounds. However, considering the diversity of the target list, the choice is left to the operator subject to the performance standards given in Section 11.

7.2.2.3 Mass Spectrometer. Either a linear quadrupole or ion trap mass spectrometer can be used as long as it is capable of scanning from 35 to 300 amu every 1 second or less, utilizing 70 volts (nominal) electron energy in the electron impact ionization mode, and producing a mass spectrum which meets all the instrument performance acceptance criteria when 50 ng or less of p-bromofluorobenzene (BFB) is analyzed.

7.2.2.3.1Linear Quadrupole Technology. A simplified diagram of the heart of the quadrupole mass spectrometer is shown in Figure 6. The quadrupole consists of a parallel set of four rod electrodes mounted in a square configuration. The field within the analyzer is created by coupling opposite pairs of rods together and applying radiofrequency (RF) and direct current (DC) potentials between the pairs of rods. Ions created in the ion source from the reaction of column eluates with electrons from the electron source are moved through the

parallel array of rods under the influence of the generated field. Ions which are successfully transmitted through the quadrupole are said to possess stable trajectories and are subsequently recorded with the detection system. When the DC potential is zero, a wide band of m/z values is transmitted through the quadrupole. This "RF only" mode is referred to as the "total-ion" mode. In this mode, the quadrupole acts as a strong focusing lens analogous to a high pass filter. The amplitude of the RF determines the low mass cutoff. A mass spectrum is generated by scanning the DC and RF voltages using a fixed DC/RF ratio and a constant drive frequency or by scanning the frequency and holding the DC and RF constant. With the quadrupole system only 0.1 to 0.2 percent of the ions formed in the ion source actually reach the detector.

7.2.2.3.2Ion Trap Technology. An ion-trap mass spectrometer consists of a chamber formed between two metal surfaces in the shape of a hyperboloid of one sheet (ring electrode) and a hyperboloid of two sheets (the two end-cap electrodes). Ions are created within the chamber by electron impact from an electron beam admitted through a small aperture in one of the end caps. Radio frequency (RF) (and sometimes direct current voltage offsets) are applied between the ring electrode and the two end-cap electrodes establishing a quadrupole electric field. This field is uncoupled in three directions so that ion motion can be considered independently in each direction; the force acting upon an ion increases with the displacement of the ion from the center of the field but the direction of the force depends on the instantaneous voltage applied to the ring electrode. A restoring force along one coordinate (such as the distance, r, from the ion-trap's axis of radial symmetry) will exist concurrently with a repelling force along another coordinate (such as the distance, z, along the ion traps axis), and if the field were static the ions would eventually strike an electrode. However, in an RF field the force along each coordinate alternates direction so that a stable trajectory may be possible in which the ions do not strike a surface. In practice, ions of appropriate mass-to-charge ratios may be trapped within the device for periods of milliseconds to hours. A diagram of a typical ion trap is illustrated in Figure 7. Analysis of stored ions is performed by increasing the RF voltage, which makes the ions successively unstable. The effect of the RF voltage on the ring electrode is to "squeeze" the ions in the xy plane so that they move along the z axis. Half the ions are lost to the top cap (held at ground potential); the remaining ions exit the lower end cap to be detected by the electron multiplier. As the energy applied to the ring electrode is increased, the ions are collected in order of increasing mass to produce a conventional mass spectrum. With the ion trap, approximately 50 percent of the generated ions are detected. As a result, a significant increase in sensitivity can be achieved when compared to a full scan linear quadrupole system.

7.2.2.4 GC/MS Interface. Any gas chromatograph to mass spectrometer interface that gives acceptable calibration points for each of the analytes of interest and can be used to achieve all acceptable performance criteria may be used. Gas chromatograph to mass spectrometer interfaces constructed of all-glass, glass-lined, or fused silica-lined materials are recommended. Glass and fused silica should be deactivated.

7.2.2.5 Data System. The computer system that is interfaced to the mass spectrometer must allow the continuous acquisition and storage, on machine readable media, of all mass spectra obtained throughout the duration of the chromatographic program. The computer must have software that allows searching any GC/MS data file for ions of a specified mass and plotting such ion abundances versus time or scan number. This type of plot is defined as a Selected Ion Current Profile (SICP). Software must also be available that allows integrating the abundance in any SICP between specified time or scan number limits. Also, software must be available that allows for the comparison of sample spectra with reference library spectra. The National Institute of Standards and Technology (NIST) or Wiley Libraries or equivalent are recommended as reference libraries.

7.2.2.6 Off-line Data Storage Device. Device must be capable of rapid recording and retrieval of data and must be suitable for long-term, off-line data storage.

7.3 Calibration System and Manifold Apparatus (see Figure 8)

7.3.1 Calibration Manifold. Stainless steel, glass, or high purity quartz manifold, (e.g.,1.25-cm I.D. x 66-cm) with sampling ports and internal baffles for flow disturbance to ensure proper mixing. The manifold should be heated to ~50°C.

7.3.2 Humidifier. 500-mL impinger flask containing HPLC grade deionized water.

7.3.3 Electronic Mass Flow Controllers. One 0 to 5 L/min unit and one or more 0 to 100 mL/min units for air, depending on number of cylinders in use for calibration.

7.3.4 Teflon Filter(s). 47-mm Teflon® filter for particulate collection.

7.4 Reagents

7.4.1 Neat Materials or Manufacturer-Certified Solutions/Mixtures. Best source (see Section 9).

7.4.2 Helium and Air. Ultra-high purity grade in gas cylinders. He is used as carrier gas in the GC.

7.4.3 Liquid Nitrogen or Liquid Carbon Dioxide. Used to cool secondary trap.

7.4.4 Deionized Water. High performance liquid chromatography (HPLC) grade, ultra-high purity (for humidifier).

8. Collection of Samples in Canisters

8.1 Introduction

8.1.1 Canister samplers, sampling procedures, and canister cleaning procedures have not changed very much from the description given in the original Compendium Method TO-14. Much of the material in this section is therefore simply a restatement of the material given in Compendium Method TO-14, repeated here in order to have all the relevant information in one place.

8.1.2 Recent notable additions to the canister technology has been in the application of canister-based systems for example, to microenvironmental monitoring (8), the capture of breath samples (9), and sector sampling to identify emission sources of VOCs (10).

8.1.3 EPA has also sponsored the development of a mathematical model to predict the storage stability of arbitrary mixtures of trace gases in humidified air (3), and the investigation of the SilcoSteel™ process of coating the canister interior with a film of fused silica to reduce surface activity (11). A recent summary of storage stability data for VOCs in canisters is given in the open literature (5).

8.2 Sampling System Description

8.2.1 Subatmospheric Pressure Sampling [see Figure 1 (without metal bellows type pump)].

8.2.1.1 In preparation for subatmospheric sample collection in a canister, the canister is evacuated to 0.05 mm Hg (see Appendix C for discussion of evacuation pressure). When the canister is opened to the atmosphere containing the VOCs to be sampled, the differential pressure causes the sample to flow into the canister. This technique may be used to collect grab samples (duration of 10 to 30 seconds) or time-weighted-average (TWA) samples (duration of 1-24 hours) taken through a flow-restrictive inlet (e.g., mass flow controller, critical orifice).

8.2.1.2 With a critical orifice flow restrictor, there will be a decrease in the flow rate as the pressure approaches atmospheric. However, with a mass flow controller, the subatmospheric sampling system can maintain a constant flow rate from full vacuum to within about 7 kPa (1.0 psi) or less below ambient pressure.

8.2.2 Pressurized Sampling [see Figure 1 (with metal bellows type pump)].

8.2.2.1 Pressurized sampling is used when longer-term integrated samples or higher volume samples are required. The sample is collected in a canister using a pump and flow control arrangement to achieve a typical 101-202 kPa (15-30 psig) final canister pressure. For example, a 6-liter evacuated canister can be filled at 10 mL/min for 24 hours to achieve a final pressure of 144 kPa (21 psig).

8.2.2.2 In pressurized canister sampling, a metal bellows type pump draws in air from the sampling manifold to fill and pressurize the sample canister.

8.2.3 All Samplers.

8.2.3.1 A flow control device is chosen to maintain a constant flow into the canister over the desired sample period. This flow rate is determined so the canister is filled (to about 88.1 kPa for subatmospheric pressure sampling or to about one atmosphere above ambient pressure for pressurized sampling) over the desired sample period. The flow rate can be calculated by:

$$F = \frac{P \times V}{T \times 60}$$

where:

F = flow rate, mL/min.
P = final canister pressure, atmospheres absolute. P is approximately equal to

$$\frac{\text{kPa gauge}}{101.2} + 1$$

V = volume of the canister, mL.
T = sample period, hours.

For example, if a 6-L canister is to be filled to 202 kPa (2 atmospheres) absolute pressure in 24 hours, the flow rate can be calculated by:

$$F = \frac{2 \times 6000}{24 \times 60} = 8.3 \text{ mL/min}$$

8.2.3.2 For automatic operation, the timer is designed to start and stop the pump at appropriate times for the desired sample period. The timer must also control the solenoid valve, to open the valve when starting the pump and to close the valve when stopping the pump.

8.2.3.3 The use of the Skinner Magnelatch valve (see Figure 2) avoids any substantial temperature rise that would occur with a conventional, normally closed solenoid valve that would have to be energized during the entire sample period. The temperature rise in the valve could cause outgassing of organic compounds from the Viton® valve seat material. The Skinner Magnelatch valve requires only a brief electrical pulse to open or close at the appropriate start and stop times and therefore experiences no temperature increase. The pulses may be obtained either with an electronic timer that can be programmed for short (5 to 60 seconds) ON periods, or with a conventional mechanical timer and a special pulse circuit. A simple electrical pulse circuit for operating the Skinner Magnelatch solenoid valve with a conventional mechanical timer is illustrated in Figure 2(a). However, with this simple circuit, the valve may operate unreliably during brief power interruptions or if the timer is manually switched on and off too fast. A better circuit incorporating a time-delay relay to provide more reliable valve operation is shown in Figure 2(b).

8.2.3.4 The connecting lines between the sample inlet and the canister should be as short as possible to minimize their volume. The flow rate into the canister should remain relatively constant over the entire sampling period.

8.2.3.5 As an option, a second electronic timer may be used to start the auxiliary pump several hours prior to the sampling period to flush and condition the inlet line.

8.2.3.6 Prior to field use, each sampling system must pass a humid zero air certification (see Section 8.4.3). All plumbing should be checked carefully for leaks. The canisters must also pass a humid zero air certification before use (see Section 8.4.1).

8.3 Sampling Procedure

8.3.1 The sample canister should be cleaned and tested according to the procedure in Section 8.4.1.

8.3.2 A sample collection system is assembled as shown in Figures 1 and 3 and must be cleaned according to the procedure outlined in Sections 8.4.2 and 8.4.4.

[Note: The sampling system should be contained in an appropriate enclosure.]

8.3.3 Prior to locating the sampling system, the user may want to perform "screening analyses" using a portable GC system, as outlined in Appendix B of Compendium Method TO-14A, to determine potential volatile organics present and potential "hot spots." The information gathered from the portable GC screening analysis would be used in developing a monitoring protocol, which includes the sampling system location, based upon the "screening analysis" results.

8.3.4 After "screening analysis," the sampling system is located. Temperatures of ambient air and sampler box interior are recorded on the canister sampling field test data sheet (FTDS), as documented in Figure 9.

[Note: The following discussion is related to Figure 1]

8.3.5 To verify correct sample flow, a "practice" (evacuated) canister is used in the sampling system.

[Note: For a subatmospheric sampler, a flow meter and practice canister are needed. For the pump-driven system, the practice canister is not needed, as the flow can be measured at the outlet of the system.]

A certified mass flow meter is attached to the inlet line of the manifold, just in front of the filter. The canister is opened. The sampler is turned on and the reading of the certified mass flow meter is compared to the sampler mass flow controller. The values should agree within ±10%. If not, the sampler mass flow meter needs to be recalibrated or there is a leak in the system. This should be investigated and corrected.

[Note: Mass flow meter readings may drift. Check the zero reading carefully and add or subtract the zero reading when reading or adjusting the sampler flow rate to compensate for any zero drift.]

After 2 minutes, the desired canister flow rate is adjusted to the proper value (as indicated by the certified mass flow meter) by the sampler flow control unit controller (e.g., 3.5 mL/min for 24 hr, 7.0 mL/min for 12 hr). Record final flow under "CANISTER FLOW RATE" on the FTDS.

8.3.6 The sampler is turned off and the elapsed time meter is reset to 000.0.

[Note: Whenever the sampler is turned off, wait at least 30 seconds to turn the sampler back on.]

8.3.7 The "practice" canister and certified mass flow meter are disconnected and a clean certified (see Section 8.4.1) canister is attached to the system.

8.3.8 The canister valve and vacuum/pressure gauge valve are opened.

8.3.9 Pressure/vacuum in the canister is recorded on the canister FTDS (see Figure 9) as indicated by the sampler vacuum/pressure gauge.

8.3.10 The vacuum/pressure gauge valve is closed and the maximum-minimum thermometer is reset to current temperature. Time of day and elapsed time meter readings are recorded on the canister FTDS.

8.3.11 The electronic timer is set to start and stop the sampling period at the appropriate times. Sampling starts and stops by the programmed electronic timer.

8.3.12 After the desired sampling period, the maximum, minimum, current interior temperature and current ambient temperature are recorded on the FTDS. The current reading from the flow controller is recorded.

8.3.13 At the end of the sampling period, the vacuum/pressure gauge valve on the sampler is briefly opened and closed and the pressure/vacuum is recorded on the FTDS. Pressure should be close to desired pressure.

[Note: For a subatmospheric sampling system, if the canister is at atmospheric pressure when the field final pressure check is performed, the sampling period may be suspect. This information should be noted on the sampling field data sheet.]

Time of day and elapsed time meter readings are also recorded.

8.3.14 The canister valve is closed. The sampling line is disconnected from the canister and the canister is removed from the system. For a subatmospheric system, a certified mass flow meter is once again connected to the inlet manifold in front of the in-line filter and a "practice" canister is attached to the Magnelatch valve of the sampling system. The final flow rate is recorded on the canister FTDS (see Figure 9).

[Note: For a pressurized system, the final flow may be measured directly.]

The sampler is turned off.

8.3.15 An identification tag is attached to the canister. Canister serial number, sample number, location, and date, as a minimum, are recorded on the tag. The canister is routinely transported back to the analytical laboratory with other canisters in a canister shipping case.

8.4 Cleaning and Certification Program

8.4.1 Canister Cleaning and Certification.

8.4.1.1 All canisters must be clean and free of any contaminants before sample collection.

8.4.1.2 All canisters are leak tested by pressurizing them to approximately 206 kPa (30 psig) with zero air.

[Note: The canister cleaning system in Figure 10 can be used for this task.]

The initial pressure is measured, the canister valve is closed, and the final pressure is checked after 24 hours. If acceptable, the pressure should not vary more than ± 13.8 kPa (± 2 psig) over the 24 hour period.

8.4.1.3 A canister cleaning system may be assembled as illustrated in Figure 10. Cryogen is added to both the vacuum pump and zero air supply traps. The canister(s) are connected to the manifold. The vent shut-off valve and the canister valve(s) are opened to release any remaining pressure in the canister(s). The vacuum pump is started and the vent shut-off valve is then closed and the vacuum shut-off valve is opened. The canister(s) are evacuated to <0.05 mm Hg (see Appendix B) for at least 1 hour.

[Note: On a daily basis or more often if necessary, the cryogenic traps should be purged with zero air to remove any trapped water from previous canister cleaning cycles.]

Air released/evacuated from canisters should be diverted to a fume hood.

8.4.1.4 The vacuum and vacuum/pressure gauge shut-off valves are closed and the zero air shut-off valve is opened to pressurize the canister(s) with humid zero air to approximately 206 kPa (30 psig). If a zero gas generator system is used, the flow rate may need to be limited to maintain the zero air quality.

8.4.1.5 The zero air shut-off valve is closed and the canister(s) is allowed to vent down to atmospheric pressure through the vent shut-off valve. The vent shut-off valve is closed. Repeat Sections 8.4.1.3 through 8.4.1.5 two additional times for a total of three (3) evacuation/pressurization cycles for each set of canisters.

8.4.1.6 At the end of the evacuation/pressurization cycle, the canister is pressurized to 206 kPa (30 psig) with humid zero air. The canister is then analyzed by a GC/MS analytical system. Any canister that has not tested clean (compared to direct analysis of humidified zero air of less than 0.2 ppbv of targeted VOCs) should not be used. As a "blank" check of the canister(s) and cleanup procedure, the final humid zero air fill of 100% of the canisters is analyzed until the cleanup system and canisters are proven reliable (less than 0.2 ppbv of any target VOCs). The check can then be reduced to a lower percentage of canisters.

8.4.1.7 The canister is reattached to the cleaning manifold and is then reevacuated to <0.05 mm Hg (see Appendix B) and remains in this condition until used. The canister valve is closed. The canister is removed from the cleaning system and the canister connection is capped with a stainless steel fitting. The canister is now ready for collection of an air sample. An identification tag is attached to the inlet of each canister for field notes and chain-of-custody purposes. An alternative to evacuating the canister at this point is to store the canisters and reevacuate them just prior to the next use.

8.4.1.8 As an option to the humid zero air cleaning procedures, the canisters are heated in an isothermal oven not to exceed 100°C during evacuation of the canister to ensure that higher molecular weight compounds are not retained on the walls of the canister.

[Note: For sampling more complex VOC mixtures the canisters should be heated to higher temperatures during the cleaning procedure although a special high temperature valve would be needed].

Once heated, the canisters are evacuated to <0.05 mm Hg (see Appendix B) and maintained there for 1 hour. At the end of the heated/evacuated cycle, the canisters are pressurized with humid zero air and analyzed by a GC/MS system after a minimum of 12 hrs of "aging." Any canister that has not tested clean (less than 0.2 ppbv each of targeted compounds) should not be used. Once tested clean, the canisters are reevacuated to <0.05 mm Hg (see Appendix B) and remain in the evacuated state until used. As noted in Section 8.4.1.7, reevacuation can occur just prior to the next use.

8.4.2 Cleaning Sampling System Components.

8.4.2.1 Sample components are disassembled and cleaned before the sampler is assembled. Nonmetallic parts are rinsed with HPLC grade deionized water and dried in a vacuum oven at 50°C. Typically, stainless steel parts and fittings are cleaned by placing them in a beaker of methanol in an ultrasonic bath for 15 minutes. This procedure is repeated with hexane as the solvent.

8.4.2.2 The parts are then rinsed with HPLC grade deionized water and dried in a vacuum oven at 100°C for 12 to 24 hours.

8.4.2.3 Once the sampler is assembled, the entire system is purged with humid zero air for 24 hours.

8.4.3 Zero Air Certification.

[Note: In the following sections, "certification" is defined as evaluating the sampling system with humid zero air and humid calibration gases that pass through all active components of the sampling system. The system is "certified" if no significant additions or deletions (less than 0.2 ppbv each of target compounds) have occurred when challenged with the test gas stream.]

8.4.3.1 The cleanliness of the sampling system is determined by testing the sampler with humid zero air without an evacuated gas sampling canister, as follows.

8.4.3.2 The calibration system and manifold are assembled, as illustrated in Figure 8. The sampler (without an evacuated gas canister) is connected to the manifold and the zero air cylinder is activated to generate a humid gas stream (2 L/min) to the calibration manifold [see Figure 8(b)].

8.4.3.3 The humid zero gas stream passes through the calibration manifold, through the sampling system (without an evacuated canister) to the water management system/VOC preconcentrator of an analytical system.

[Note: The exit of the sampling system (without the canister) replaces the canister in Figure 11.]

After the sample volume (e.g., 500 mL) is preconcentrated on the trap, the trap is heated and the VOCs are thermally desorbed and refocussed on a cold trap. This trap is heated and the VOCs are thermally desorbed onto the head of the capillary column. The VOCs are refocussed prior to gas chromatographic separation. Then, the oven temperature (programmed) increases and the VOCs begin to elute and are detected by a GC/MS (see Section 10) system. The analytical system should not detect greater than 0.2 ppbv of any targeted VOCs in order for the sampling system to pass the humid zero air certification test. Chromatograms (using an FID) of a certified sampler and contaminated sampler are illustrated in Figures 12(a) and 12(b), respectively. If the sampler passes the humid zero air test, it is then tested with humid calibration gas standards containing selected VOCs at concentration levels expected in field sampling (e.g., 0.5 to 2 ppbv) as outlined in Section 8.4.4.

8.4.4 Sampler System Certification with Humid Calibration Gas Standards from a Dynamic Calibration System

8.4.4.1 Assemble the dynamic calibration system and manifold as illustrated in Figure 8.

8.4.4.2 Verify that the calibration system is clean (less than 0.2 ppbv of any target compounds) by sampling a humidified gas stream, *without* gas calibration standards, with a previously certified clean canister (see Section 8.1).

8.4.4.3 The assembled dynamic calibration system is certified clean if less than 0.2 ppbv of any targeted compounds is found.

8.4.4.4 For generating the humidified calibration standards, the calibration gas cylinder(s) containing nominal concentrations of 10 ppmv in nitrogen of selected VOCs is attached to the calibration system as illustrated in Figure 8. The gas cylinders are opened and the gas mixtures are passed through 0 to 10 mL/min certified mass flow controllers to generate ppb levels of calibration standards.

8.4.4.5 After the appropriate equilibrium period, attach the sampling system (containing a certified evacuated canister) to the manifold, as illustrated in Figure 8(b).

8.4.4.6 Sample the dynamic calibration gas stream with the sampling system.

8.4.4.7 Concurrent with the sampling system operation, realtime monitoring of the calibration gas stream is accomplished by the on-line GC/MS analytical system [Figure 8(a)] to provide reference concentrations of generated VOCs.

8.4.4.8 At the end of the sampling period (normally the same time period used for experiments), the sampling system canister is analyzed and compared to the reference GC/MS analytical system to determine if the concentration of the targeted VOCs was increased or decreased by the sampling system.

8.4.4.9 A recovery of between 90% and 110% is expected for all targeted VOCs.

8.4.5 Sampler System Certification without Compressed Gas Cylinder Standards.

8.4.5.1 Not all the gases on the Title III list are available/compatible with compressed gas standards. In these cases sampler certification must be approached by different means.

8.4.5.2 Definitive guidance is not currently available in these cases; however, Section 9.2 lists several ways to generate gas standards. In general, Compendium Method TO-14A compounds (see Table 1) are available commercially as compressed gas standards.

9. GC/MS Analysis of Volatiles from Canisters

9.1 Introduction

9.1.1 The analysis of canister samples is accomplished with a GC/MS system. Fused silica capillary columns are used to achieve high temporal resolution of target compounds. Linear quadrupole or ion trap mass spectrometers are employed for compound detection. The heart of the system is composed of the sample inlet concentrating device that is needed to increase sample loading into a detectable range. Two examples of concentrating systems are discussed. Other approaches are acceptable as long as they are compatible with achieving the system performance criteria given in Section 11.

9.1.2 With the first technique, a whole air sample from the canister is passed through a multisorbent packing (including single adsorbent packings) contained within a metal or glass tube maintained at or above the surrounding air temperature. Depending on the water retention properties of the packing, some or most of the water vapor passes completely through the trap during sampling. Additional drying of the sample is accomplished after the sample concentration is completed by forward purging the trap with clean, dry helium or another inert gas (air is not used). The sample is then thermally desorbed from the packing and backflushed from the trap onto a gas chromatographic column. In some systems a "refocusing" trap is placed between the primary trap and the gas chromatographic column. The specific system design downstream of the primary trap depends on technical factors such as the rate of thermal desorption and sampled volume, but the objective in most cases is to enhance chromatographic resolution of the individual sample components before detection on a mass spectrometer.

9.1.3 Sample drying strategies depend on the target list of compounds. For some target compound lists, the multisorbent packing of the concentrator can be selected from hydrophobic adsorbents which allow a high percentage of water vapor in the sample to pass through the concentrator during sampling and without significant loss of the target compounds. However, if very volatile organic compounds are on the target list, the adsorbents required for their retention may also strongly retain water vapor and a more lengthy dry purge is necessary prior to analysis.

9.1.4 With the second technique, a whole air sample is passed through a concentrator where the VOCs are condensed on a reduced temperature surface (cold trap). Subsequently, the condensed gases are thermally desorbed and backflushed from the trap with an inert gas onto a gas chromatographic column. This concentration technique is similar to that discussed in Compendium Method TO-14, although a membrane dryer is not used. The sample size is reduced in volume to limit the amount of water vapor that is also collected (100 mL or less may be necessary). The attendant reduction in sensitivity is offset by enhancing the sensitivity of detection, for example by using an ion trap detector.

9.2 Preparation of Standards

9.2.1 Introduction.

9.2.1.1 When available, standard mixtures of target gases in high pressure cylinders must be certified traceable to a NIST Standard Reference Material (SRM) or to a NIST/EPA approved Certified Reference Material (CRM). Manufacturer's certificates of analysis must be retained to track the expiration date.

9.2.1.2 The neat standards that are used for making trace gas standards must be of high purity; generally a purity of 98 percent or better is commercially available.

9.2.1.3 Cylinder(s) containing approximately 10 ppmv of each of the target compounds are typically used as primary stock standards. The components may be purchased in one cylinder or in separate cylinders depending on compatibility of the compounds and the pressure of the mixture in the cylinder. Refer to manufacturer's specifications for guidance on purchasing and mixing VOCs in gas cylinders.

9.2.2 Preparing Working Standards.

9.2.2.1 Instrument Performance Check Standard. Prepare a standard solution of BFB in humidified zero air at a concentration which will allow collection of 50 ng of BFB or less under the optimized concentration parameters.

9.2.2.2 Calibration Standards. Prepare five working calibration standards in humidified zero air at a concentration which will allow collection at the 2, 5, 10, 20, and 50 ppbv level for each component under the optimized concentration parameters.

9.2.2.3 Internal Standard Spiking Mixture. Prepare an internal spiking mixture containing bromochloromethane, chlorobenzene-d_5, and 1,4-difluorobenzene at 10 ppmv each in humidified zero air to be added to the sample or calibration standard. 500 µL of this mixture spiked into 500 mL of sample will result in a concentration of 10 ppbv. The internal standard is introduced into the trap during the collection time for all calibration, blank, and sample analyses using the apparatus shown in Figure 13 or by equivalent means. The volume of internal standard spiking mixture added for each analysis must be the same from run to run.

9.2.3 Standard Preparation by Dynamic Dilution Technique.

9.2.3.1 Standards may be prepared by dynamic dilution of the gaseous contents of a cylinder(s) containing the gas calibration stock standards with humidified zero air using mass flow controllers and a calibration manifold. The working standard may be delivered from the manifold to a clean, evacuated canister using a pump and mass flow controller.

9.2.3.2 Alternatively, the analytical system may be calibrated by sampling directly from the manifold if the flow rates are optimized to provide the desired amount of calibration standards. However, the use of the canister as a reservoir prior to introduction into the concentration system resembles the procedure normally used to collect samples and is preferred. Flow rates of the dilution air and cylinder standards (all expressed in the same units) are measured using a bubble meter or calibrated electronic flow measuring device, and the concentrations of target compounds in the manifold are then calculated using the dilution ratio and the original concentration of each compound.

$$\text{Manifold Conc.} = \frac{(\text{Original Conc.})\ (\text{Std. Gas Flowrate})}{(\text{Air Flowrate}) + (\text{Std. Gas Flowrate})}$$

9.2.3.3 Consider the example of 1 mL/min flow of 10 ppmv standard diluted with 1,000 mL/min of humid air provides a nominal 10 ppbv mixture, as calculated below:

$$\text{Manifold Conc.} = \frac{(10\ \text{ppm})(1\ \text{mL/min})(1000\ \text{ppb}/1\ \text{ppm})}{(1000\ \text{mL/min}) + (1\ \text{mL/min})} = 10\ \text{ppb}$$

9.2.4 Standard Preparation by Static Dilution Bottle Technique

[Note: Standards may be prepared in canisters by spiking the canister with a mixture of components prepared in a static dilution bottle (12). This technique is used specifically for liquid standards.]

9.2.4.1 The volume of a clean 2-liter round-bottom flask, modified with a threaded glass neck to accept a Mininert septum cap, is determined by weighing the amount of water required to completely fill up the flask. Assuming a density for the water of 1 g/mL, the weight of the water in grams is taken as the volume of the flask in milliliters.

9.2.4.2 The flask is flushed with helium by attaching a tubing into the glass neck to deliver the helium. After a few minutes, the tubing is removed and the glass neck is immediately closed with a Mininert septum cap.

9.2.4.3 The flask is placed in a 60°C oven and allowed to equilibrate at that temperature for about 15 minutes. Predetermined aliquots of liquid standards are injected into the flask making sure to keep the flask temperature constant at 60°C.

9.2.4.4 The contents are allowed to equilibrate in the oven for at least 30 minutes. To avoid condensation, syringes must be preheated in the oven at the same temperature prior to withdrawal of aliquots to avoid condensation.

9.2.4.5 Sample aliquots may then be taken for introduction into the analytical system or for further dilution. An aliquot or aliquots totaling greater than 1 percent of the flask volume should be avoided.

9.2.4.6 Standards prepared by this method are stable for one week. The septum must be replaced with each freshly prepared standard.

9.2.4.7 The concentration of each component in the flask is calculated using the following equation:

$$\text{Concentration, mg/L} = \frac{(V_a)(d)}{V_f}$$

where: V_a = Volume of liquid neat standard injected into the flask, µL.
d = Density of the liquid neat standard, mg/µL.
V_f = Volume of the flask, L.

9.2.4.8 To obtain concentrations in ppbv, the equation given in Section 9.2.5.7 can be used.

[Note: In the preparation of standards by this technique, the analyst should make sure that the volume of neat standard injected into the flask does not result in an overpressure due to the higher partial pressure produced by the standard compared to the vapor pressure in the flask. Precautions should also be taken to avoid a significant decrease in pressure inside the flask after withdrawal of aliquot(s).]

9.2.5 Standard Preparation Procedure in High Pressure Cylinders

[Note: Standards may be prepared in high pressure cylinders (13). A modified summary of the procedure is provided below.]

9.2.5.1 The standard compounds are obtained as gases or neat liquids (greater than 98 percent purity).

9.2.5.2 An aluminum cylinder is flushed with high-purity nitrogen gas and then evacuated to better than 25 in. Hg.

9.2.5.3 Predetermined amounts of each neat standard compound are measured using a microliter or gastight syringe and injected into the cylinder. The cylinder is equipped with a heated injection port and nitrogen flow to facilitate sample transfer.

9.2.5.4 The cylinder is pressurized to 1000 psig with zero nitrogen.

[Note: User should read all SOPs associated with generating standards in high pressure cylinders. Follow all safety requirements to minimize danger from high pressure cylinders.]

9.2.5.5 The contents of the cylinder are allowed to equilibrate (~24 hrs) prior to withdrawal of aliquots into the GC system.

9.2.5.6 If the neat standard is a gas, the cylinder concentration is determined using the following equation:

$$\text{Concentration, ppbv} = \frac{\text{Volume}_{\text{standard}}}{\text{Volume}_{\text{dilution gas}}} \times 10^9$$

[Note: Both values must be expressed in the same units.]

9.2.5.7 If the neat standard is a liquid, the gaseous concentration can be determined using the following equations:

$$V = \frac{nRT}{P}$$

and:

$$n = \frac{(mL)(d)}{MW}$$

where:
- V = Gaseous volume of injected compound at EPA standard temperature (25°C) and pressure (760 mm Hg), L.
- n = Moles.
- R = Gas constant, 0.08206 L-atm/mole °K.
- T = 298°K (standard temperature).
- P = 1 standard pressure, 760 mm Hg (1 atm).
- mL = Volume of liquid injected, mL.
- d = Density of the neat standard, g/mL.
- MW = Molecular weight of the neat standard expressed, g/g-mole.

The gaseous volume of the injected compound is divided by the cylinder volume at STP and then multiplied by 10^9 to obtain the component concentration in ppb units.

9.2.6 Standard Preparation by Water Methods.

[Note: Standards may be prepared by a water purge and trap method (14) and summarized as follows].

9.2.6.1 A previously cleaned and evacuated canister is pressurized to 760 mm Hg absolute (1 atm) with zero grade air.

9.2.6.2 The air gauge is removed from the canister and the sparging vessel is connected to the canister with the short length of 1/16 in. stainless steel tubing.

[Note: Extra effort should be made to minimize possible areas of dead volume to maximize transfer of analytes from the water to the canister.]

9.2.6.3 A measured amount of the stock standard solution and the internal standard solution is spiked into 5 mL of water.

9.2.6.4 This water is transferred into the sparge vessel and purged with nitrogen for 10 mins at 100 mL/min. The sparging vessel is maintained at 40°C.

9.2.6.5 At the end of 10 mins, the sparge vessel is removed and the air gauge is re-installed, to further pressurize the canister with pure nitrogen to 1500 mm Hg absolute pressure (approximately 29 psia).

9.2.6.6 The canister is allowed to equilibrate overnight before use.

9.2.6.7 A schematic of this approach is shown in Figure 14.

9.2.7 Preparation of Standards by Permeation Tubes.

9.2.7.1 Permeation tubes can be used to provide standard concentration of a trace gas or gases. The permeation of the gas can occur from inside a permeation tube containing the trace species of interest to an air stream outside. Permeation can also occur from outside a permeable membrane tube to an air stream passing through the tube (e.g., a tube of permeable material immersed in a liquid).

9.2.7.2 The permeation system is usually held at a constant temperature to generate a constant concentration of trace gas. Commercial suppliers provide systems for generation and dilution of over 250 compounds. Some commercial suppliers of permeation tube equipment are listed in Appendix D.

9.2.8 Storage of Standards.

9.2.8.1 Working standards prepared in canisters may be stored for thirty days in an atmosphere free of potential contaminants.

9.2.8.2 It is imperative that a storage logbook be kept to document storage time.

10. GC/MS Operating Conditions

10.1 Preconcentrator

The following are typical cryogenic and adsorbent preconcentrator analytical conditions which, however, depend on the specific combination of solid sorbent and must be selected carefully by the operator. The reader is referred to Tables 1 and 2 of Compendium Method TO-17 for guidance on selection of sorbents. An example of a system using a solid adsorbent preconcentrator with a cryofocusing trap is discussed in the literature (15). Oven temperature programming starts above ambient.

10.1.1 Sample Collection Conditions

Cryogenic Trap **Adsorbent Trap**

Set point	-150°C	Set point	27°C
Sample volume	- up to 100 mL	Sample volume	- up to 1,000 mL
Carrier gas purge flow	- none	Carrier gas purge flow	- selectable

[Note: The analyst should optimize the flow rate, duration of sampling, and absolute sample volume to be used. Other preconcentration systems may be used provided performance standards (see Section 11) are realized.]

10.1.2 Desorption Conditions

Cryogenic Trap		**Adsorbent Trap**	
Desorb Temperature	120°C	Desorb Temperature	Variable
Desorb Flow Rate	~ 3 mL/min He	Desorb Flow Rate	~3 mL/min He
Desorb Time	<60 sec	Desorb Time	<60 sec

The adsorbent trap conditions depend on the specific solid adsorbents chosen (see manufacturers' specifications).

10.1.3 Trap Reconditioning Conditions.

Cryogenic Trap		**Adsorbent Trap**	
Initial bakeout	120°C (24 hrs)	Initial bakeout	
Variable (24 hrs)			
After each run	120°C (5 min)	After each run	Variable (5 min)

10.2 GC/MS System

10.2.1 Optimize GC conditions for compound separation and sensitivity. Baseline separation of benzene and carbon tetrachloride on a 100% methyl polysiloxane stationary phase is an indication of acceptable chromatographic performance.

10.2.2 The following are the recommended gas chromatographic analytical conditions when using a 50-meter by 0.3-mm I.D., 1 µm film thickness fused silica column with refocusing on the column.

Item	**Condition**	
Carrier Gas:	Helium	
Flow Rate:	Generally 1-3 mL/min as recommended by manufacturer	
Temperature Program:	Initial Temperature:	-50°C
	Initial Hold Time:	2 min
	Ramp Rate:	8° C/min
	Final Temperature:	200°C
	Final Hold Time:	Until all target compounds elute.

10.2.3 The following are the recommended mass spectrometer conditions:

Item	**Condition**

Electron Energy:	70 Volts (nominal)
Mass Range:	35-300 amu [the choice of 35 amu excludes the detection of some target compounds such as methanol and formaldehyde, and the quantitation of others such as ethylene oxide, ethyl carbamate, etc. (see Table 2). Lowering the mass range and using special programming features available on modern gas chromatographs will be necessary in these cases, but are not considered here.
Scan Time:	To give at least 10 scans per peak, not to exceed 1 second per scan].

A schematic for a typical GC/MS analytical system is illustrated in Figure 15.

10.3 Analytical Sequence

10.3.1 Introduction. The recommended GC/MS analytical sequence for samples during each 24-hour time period is as follows:

- Perform instrument performance check using bromofluorobenzene (BFB).
- Initiate multi-point calibration or daily calibration checks.
- Perform a laboratory method blank.
- Complete this sequence for analysis of $\leq$20 field samples.

10.4 Instrument Performance Check

10.4.1 Summary. It is necessary to establish that a given GC/MS meets tuning and standard mass spectral abundance criteria prior to initiating any data collection. The GC/MS system is set up according to the manufacturer's specifications, and the mass calibration and resolution of the GC/MS system are then verified by the analysis of the instrument performance check standard, bromofluorobenzene (BFB).

10.4.2 Frequency. Prior to the analyses of any samples, blanks, or calibration standards, the Laboratory must establish that the GC/MS system meets the mass spectral ion abundance criteria for the instrument performance check standard containing BFB. The instrument performance check solution must be analyzed initially and once per 24-hour time period of operation.

The 24-hour time period for GC/MS instrument performance check and standards calibration (initial calibration or daily calibration check criteria) begins at the injection of the BFB which the laboratory records as documentation of a compliance tune.

10.4.3 Procedure. The analysis of the instrument performance check standard is performed by trapping 50 ng of BFB under the optimized preconcentration parameters. The BFB is introduced from a cylinder into the GC/MS via a sample loop valve injection system similar to that shown in Figure 13.

The mass spectrum of BFB must be acquired in the following manner. Three scans (the peak apex scan and the scans immediately preceding and following the apex) are acquired and averaged. Background subtraction is conducted using a single scan prior to the elution of BFB.

10.4.4 Technical Acceptance Criteria. Prior to the analysis of any samples, blanks, or calibration standards, the analyst must establish that the GC/MS system meets the mass spectral ion abundance criteria for the instrument performance check standard as specified in Table 3.

10.4.5 Corrective Action. If the BFB acceptance criteria are not met, the MS must be retuned. It may be necessary to clean the ion source, or quadrupoles, or take other necessary actions to achieve the acceptance criteria.

10.4.6 Documentation. Results of the BFB tuning are to be recorded and maintained as part of the instrumentation log.

10.5 Initial Calibration

10.5.1 Summary. Prior to the analysis of samples and blanks but after the instrument performance check standard criteria have been met, each GC/MS system must be calibrated at five concentrations that span the monitoring range of interest in an initial calibration sequence to determine instrument sensitivity and the linearity of GC/MS response for the target compounds. For example, the range of interest may be 2 to 20 ppbv, in which case the five concentrations would be 1, 2, 5, 10 and 25 ppbv.

One of the calibration points from the initial calibration curve must be at the same concentration as the daily calibration standard (e.g., 10 ppbv).

10.5.2 Frequency. Each GC/MS system must be recalibrated following corrective action (e.g., ion source cleaning or repair, column replacement, etc.) which may change or affect the initial calibration criteria or if the daily calibration acceptance criteria have not been met.

If time remains in the 24-hour time period after meeting the acceptance criteria for the initial calibration, samples may be analyzed.

If time does not remain in the 24-hour period after meeting the acceptance criteria for the initial calibration, a new analytical sequence shall commence with the analysis of the instrument performance check standard followed by analysis of a daily calibration standard.

10.5.3 Procedure. Verify that the GC/MS system meets the instrument performance criteria in Section 10.4.

The GC must be operated using temperature and flow rate parameters equivalent to those in Section 10.2.2. Calibrate the preconcentration-GC/MS system by drawing the standard into the system. Use one of the standards preparation techniques described under Section 9.2 or equivalent.

A minimum of five concentration levels are needed to determine the instrument sensitivity and linearity. One of the calibration levels should be near the detection level for the compounds of interest. The calibration range should be chosen so that linear results are obtained as defined in Sections 10.5.1 and 10.5.5.

Quantitation ions for the target compounds are shown in Table 2. The primary ion should be used unless interferences are present, in which case a secondary ion is used.

10.5.4 Calculations.

[Note: In the following calculations, an internal standard approach is used to calculate response factors. The area response used is that of the primary quantitation ion unless otherwise stated.]

10.5.4.1 Relative Response Factor (RRF). Calculate the relative response factors for each target compound relative to the appropriate internal standard (i.e., standard with the nearest retention time) using the following equation:

$$RRF = \frac{A_x C_{is}}{A_{is} C_x}$$

where: RRF = Relative response factor.
A_x = Area of the primary ion for the compound to be measured, counts.
A_{is} = Area of the primary ion for the internal standard, counts.
C_{is} = Concentration of internal standard spiking mixture, ppbv.
C_x = Concentration of the compound in the calibration standard, ppbv.

[Note: The equation above is valid under the condition that the volume of internal standard spiking mixture added in all field and QC analyses is the same from run to run, and that the volume of field and QC sample introduced into the trap is the same for each analysis. C_{is} and C_x must be in the same units.]

10.5.4.2 Mean Relative Response Factor. Calculate the mean RRF for each compound by averaging the values obtained at the five concentrations using the following equation:

$$\overline{RRF} = \sum_{i=1}^{n} \frac{x_i}{n}$$

where: $\overline{RRF}$ = Mean relative response factor.
x_i = RRF of the compound at concentration i.
n = Number of concentration values, in this case 5.

10.5.4.3 Percent Relative Standard Deviation (%RSD). Using the RRFs from the initial calibration, calculate the %RSD for all target compounds using the following equations:

$$\%RSD = \frac{SD_{RRF}}{\overline{RRF}} \times 100$$

and

$$SD_{RRF} = \sqrt{\sum_{i=1}^{N} \frac{(RRF_i - \overline{RRF})^2}{N - 1}}$$

where: SD_{RRF} = Standard deviation of initial response factors (per compound).
RRF_i = Relative response factor at a concentration level i.
$\overline{RRF}$ = Mean of initial relative response factors (per compound).

10.5.4.4 Relative Retention Times (RRT). Calculate the RRTs for each target compound over the initial calibration range using the following equation:

$$RRT = \frac{RT_c}{RT_{is}}$$

where: RT_c = Retention time of the target compound, seconds
RT_{is} = Retention time of the internal standard, seconds.

10.5.4.5 Mean of the Relative Retention Times ($\overline{RRT}$). Calculate the mean of the relative retention times ($\overline{RRT}$) for each analyte target compound over the initial calibration range using the following equation:

$$\overline{RRT} = \sum_{i=1}^{n} \frac{RRT}{n}$$

where: $\overline{RRT}$ = Mean relative retention time for the target compound for each initial calibration standard.

RRT = Relative retention time for the target compound at each calibration level.

10.5.4.6 Tabulate Primary Ion Area Response (Y) for Internal Standard. Tabulate the area response (Y) of the primary ions (see Table 2) and the corresponding concentration for each compound and internal standard.

10.5.4.7 Mean Area Response ($\overline{Y}$) for Internal Standard. Calculate the mean area response ($\overline{Y}$) for each internal standard compound over the initial calibration range using the following equation:

$$\overline{Y} = \sum_{i=1}^{n} \frac{Y_i}{n}$$

where: $\overline{Y}$ = Mean area response.

Y = Area response for the primary quantitation ion for the internal standard for each initial calibration standard.

10.5.4.8 Mean Retention Times ($\overline{RT}$). Calculate the mean of the retention times ($\overline{RT}$) for each internal standard over the initial calibration range using the following equation:

$$\overline{RT} = \sum_{i=1}^{n} \frac{RT_i}{n}$$

where: $\overline{RT}$ = Mean retention time, seconds

RT = Retention time for the internal standard for each initial calibration standard, seconds.

10.5.5 Technical Acceptance Criteria for the Initial Calibration.

10.5.5.1 The calculated %RSD for the RRF for each compound in the calibration table must be less than 30% with at most two exceptions up to a limit of 40%.

[Note: This exception may not be acceptable for all projects. Many projects may have a specific target list of compounds which would require the lower limit for all compounds.]

10.5.5.2 The RRT for each target compound at each calibration level must be withiin 0.06 RRT units of the mean RRT for the compound.

10.5.5.3 The area response Y of at each calibration level must be within 40% of the mean area response $\overline{Y}$ over the initial calibration range for each internal standard.

10.5.5.4 The retention time shift for each of the internal standards at each calibration level must be within 20 s of the mean retention time over the initial calibration range for each internal standard.

10.5.6 Corrective Action.

10.5.6.1 Criteria. If the initial calibration technical acceptance criteria are not met, inspect the system for problems. It may be necessary to clean the ion source, change the column, or take other corrective actions to meet the initial calibration technical acceptance criteria.

10.5.6.2 Schedule. Initial calibration acceptance criteria *must* be met before any field samples, performance evaluation (PE) samples, or blanks are analyzed.

10.6 Daily Calibration

10.6.1 Summary. Prior to the analysis of samples and blanks but after tuning criteria have been met, the initial calibration of each GC/MS system must be routinely checked by analyzing a daily calibration standard to ensure that the instrument continues to remain under control. The daily calibration standard, which is the nominal 10 ppbv level calibration standard, should contain all the target compounds.

10.6.2 Frequency. A check of the calibration curve must be performed once every 24 hours on a GC/MS system that has met the tuning criteria. The daily calibration sequence starts with the injection of the BFB. If the BFB analysis meets the ion abundance criteria for BFB, then a daily calibration standard may be analyzed.

10.6.3 Procedure. The mid-level calibration standard (10 ppbv) is analyzed in a GC/MS system that has met the tuning and mass calibration criteria following the same procedure in Section 10.5.

10.6.4 Calculations. Perform the following calculations.

[Note: As indicated earlier, the area response of the primary quantitation ion is used unless otherwise stated.]

10.6.4.1 Relative Response Factor (RRF). Calculate a relative response factor (RRF) for each target compound using the equation in Section 10.5.4.1.

10.6.4.2 Percent Difference (%D). Calculate the percent difference in the RRF of the daily RRF (24-hour) compared to the mean RRF in the most recent initial calibration. Calculate the %D for each target compound using the following equation:

$$\%D = \frac{RRF_c - \overline{RRF_i}}{\overline{RRF_i}} \times 100$$

where: RRF_c = RRF of the compound in the continuing calibration standard.

$\overline{RRF_i}$ = Mean RRF of the compound in the most recent initial calibration.

10.6.5 Technical Acceptance Criteria. The daily calibration standard must be analyzed at the concentration level and frequency described in this Section 10.6 and on a GC/MS system meeting the BFB instrument performance check criteria (see Section 10.4).

The %D for each target compound in a daily calibration sequence must be within ±30 percent in order to proceed with the analysis of samples and blanks. A control chart showing %D values should be maintained.

10.6.6 Corrective Action. If the daily calibration technical acceptance criteria are not met, inspect the system for problems. It may be necessary to clean the ion source, change the column, or take other corrective actions to meet the daily calibration technical acceptance criteria.

Daily calibration acceptance criteria must be met before any field samples, performance evaluation (PE) samples, or blanks are analyzed. If the % D criteria are not met, it will be necessary to rerun the daily calibration sample.

10.7 Blank Analyses

10.7.1 Summary. To monitor for possible laboratory contamination, laboratory method blanks are analyzed at least once in a 24-hour analytical sequence. All steps in the analytical procedure are performed on the blank

using all reagents, standards, equipment, apparatus, glassware, and solvents that would be used for a sample analysis.

A laboratory method blank (LMB) is an unused, certified canister that has not left the laboratory. The blank canister is pressurized with humidified, ultra-pure zero air and carried through the same analytical procedure as a field sample. The injected aliquot of the blank must contain the same amount of internal standards that are added to each sample.

10.7.2 Frequency. The laboratory method blank must be analyzed after the calibration standard(s) and before any samples are analyzed.

Whenever a high concentration sample is encountered (i.e., outside the calibration range), a blank analysis should be performed immediately after the sample is completed to check for carryover effects.

10.7.3 Procedure. Fill a cleaned and evacuated canister with humidified zero air (RH >20 percent, at 25°C). Pressurize the contents to 2 atm.

The blank sample should be analyzed using the same procedure outlined under Section 10.8.

10.7.4 Calculations. The blanks are analyzed similar to a field sample and the equations in Section 10.5.4 apply.

10.7.5 Technical Acceptance Criteria. A blank canister should be analyzed daily.

The area response for each internal standard (IS) in the blank must be within ±40 percent of the mean area response of the IS in the most recent valid calibration.

The retention time for each of the internal standards must be within ±0.33 minutes between the blank and the most recent valid calibration.

The blank should not contain any target analyte at a concentration greater than its quantitation level (three times the MDL as defined in Section 11.2) and should not contain additional compounds with elution characteristics and mass spectral features that would interfere with identification and measurement of a method analyte.

10.7.6 Corrective Action. If the blanks do not meet the technical acceptance criteria, the analyst should consider the analytical system to be out of control. It is the responsibility of the analyst to ensure that contaminants in solvents, reagents, glassware, and other sample storage and processing hardware that lead to discrete artifacts and/or elevated baselines in gas chromatograms be eliminated. If contamination is a problem, the source of the contamination must be investigated and appropriate corrective measures need to be taken and documented before further sample analysis proceeds.

If an analyte in the blank is found to be out of control (i.e., contaminated) and the analyte is also found in associated samples, those sample results should be "flagged" as possibly contaminated.

10.8 Sample Analysis

10.8.1 Summary. An aliquot of the air sample from a canister (e.g., 500 mL) is preconcentrated and analyzed by GC/MS under conditions stated in Sections 10.1 and 10.2. If using the multisorbent/dry purge approach, adjust the dry purge volume to reduce water effects in the analytical system to manageable levels.

[Note: The analyst should be aware that pressurized samples of high humidity samples will contain condensed water. As a result, the humidity of the sample released from the canister during analysis will vary

in humidity, being lower at the higher canister pressures and increasing in humidity as the canister pressures decreases. Storage integrity of water soluble compounds may also be affected.]

10.8.2 Frequency. If time remains in the 24-hour period in which an initial calibration is performed, samples may be analyzed without analysis of a daily calibration standard.

If time does not remain in the 24-hour period since the injection of the instrument performance check standard in which an initial calibration is performed, both the instrument performance check standard and the daily calibration standard should be analyzed before sample analysis may begin.

10.8.3 Procedure for Instrumental Analysis. Perform the following procedure for analysis.

10.8.3.1 All canister samples should be at temperature equilibrium with the laboratory.

10.8.3.2 Check and adjust the mass flow controllers to provide correct flow rates for the system.

10.8.3.3 Connect the sample canister to the inlet of the GC/MS analytical system, as shown in Figure 15 [Figure 16 shows an alternate two stage concentrator using multisorbent traps followed by a trap cooled by a closed cycle cooler (15)]. The desired sample flow is established through the six-port chromatographic valve and the preconcentrator to the downstream flow controller. The absolute volume of sample being pulled through the trap must be consistent from run to run.

10.8.3.4 Heat/cool the GC oven and cryogenic or adsorbent trap to their set points. Assuming a six-port value is being used, as soon as the trap reaches its lower set point, the six-port chromatographic valve is cycled to the trap position to begin sample collection. Utilize the sample collection time which has been optimized by the analyst.

10.8.3.5 Use the arrangement shown in Figure 13, (i.e., a gastight syringe or some alternate method) introduce an internal standard during the sample collection period. Add sufficient internal standard equivalent to 10 ppbv in the sample. For example, a 0.5 mL volume of a mixture of internal standard compounds, each at 10 ppmv concentration, added to a sample volume of 500 mL, will result in 10 ppbv of each internal standard in the sample.

10.8.3.6 After the sample and internal standards are preconcentrated on the trap, the GC sampling valve is cycled to the inject position and the trap is swept with helium and heated. Assuming a focusing trap is being used, the trapped analytes are thermally desorbed onto a focusing trap and then onto the head of the capillary column and are separated on the column using the GC oven temperature program. The canister valve is closed and the canister is disconnected from the mass flow controller and capped. The trap is maintained at elevated temperature until the beginning of the next analysis.

10.8.3.7 Upon sample injection onto the column, the GC/MS system is operated so that the MS scans the atomic mass range from 35 to 300 amu. At least ten scans per eluting chromatographic peak should be acquired. Scanning also allows identification of unknown compounds in the sample through searching of library spectra.

10.8.3.8 Each analytical run must be checked for saturation. The level at which an individual compound will saturate the detection system is a function of the overall system sensitivity and the mass spectral characteristics of that compound.

10.8.3.9 Secondary ion quantitation is allowed only when there are sample matrix interferences with the primary ion. If secondary ion quantitation is performed, document the reasons in the laboratory record book.

10.8.4 Calculations. The equation below is used for calculating concentrations.

$$C_x = \frac{A_x C_{is} DF}{A_{is} \overline{RRF}}$$

where: C_x = Compound concentration, ppbv.

A_x = Area of the characteristic ion for the compound to be measured, counts.

A_{is} = Area of the characteristic ion for the specific internal standard, counts.

C_{is} = Concentration of the internal standard spiking mixture, ppbv

.

$\overline{RRF}$ = Mean relative response factor from the initial calibration.

DF = Dilution factor calculated as described in section 2. If no dilution is performed, DF = 1.

[Note: The equation above is valid under the condition that the volume (~500 µL) of internal standard spiking mixture added in all field and QC analyses is the same from run to run, and that the volume (~500 mL) of field and QC sample introduced into the trap is the same for each analysis.]

10.8.5 Technical Acceptance Criteria.

[Note: If the most recent valid calibration is an initial calibration, internal standard area responses and RTs in the sample are evaluated against the corresponding internal standard area responses and RTs in the mid level standard (10 ppbv) of the initial calibration.]

10.8.5.1 The field sample must be analyzed on a GC/MS system meeting the BFB tuning, initial calibration, and continuing calibration technical acceptance criteria at the frequency described in Sections 10.4, 10.5 and 10.6.

10.8.5.2 The field samples must be analyzed along with a laboratory method blank that met the blank technical acceptance criteria.

10.8.5.3 All of the target analyte peaks should be within the initial calibration range.

10.8.5.4 The retention time for each internal standard must be within ±0.33 minutes of the retention time of the internal standard in the most recent valid calibration.

10.8.6 Corrective Action. If the on-column concentration of any compound in any sample exceeds the initial calibration range, an aliquot of the original sample must be diluted and reanalyzed. Guidance in performing dilutions and exceptions to this requirement are given below.

- Use the results of the original analysis to determine the approximate dilution factor required to get the largest analyte peak within the initial calibration range.
- The dilution factor chosen should keep the response of the largest analyte peak for a target compound in the upper half of the initial calibration range of the instrument.

[Note: Analysis involving dilution should be reported with a dilution factor and nature of the dilution gas.]

10.8.6.1 Internal standard responses and retention times must be evaluated during or immediately after data acquisition. If the retention time for any internal standard changes by more than 20 sec from the latest daily (24-hour) calibration standard (or mean retention time over the initial calibration range), the GC/MS system must be inspected for malfunctions, and corrections made as required.

10.8.6.2 If the area response for any internal standard changes by more than ±40 percent between the sample and the most recent valid calibration, the GC/MS system must be inspected for malfunction and

corrections made as appropriate. When corrections are made, reanalysis of samples analyzed while the system was malfunctioning is necessary.

10.8.6.3 If, after reanalysis, the area responses or the RTs for all internal standards are inside the control limits, then the problem with the first analysis is considered to have been within the control of the Laboratory. Therefore, submit only data from the analysis with SICPs within the limits. This is considered the initial analysis and should be reported as such on all data deliverables.

11. Requirements for Demonstrating Method Acceptability for VOC Analysis from Canisters

11.1 Introduction

11.1.1 There are three performance criteria which must be met for a system to qualify under Compendium Method TO-15. These criteria are: the method detection limit of ≤0.5 ppbv, replicate precision within 25 percent, and audit accuracy within 30 percent for concentrations normally expected in contaminated ambient air (0.5 to 25 ppbv).

11.1.2 Either SIM or SCAN modes of operation can be used to achieve these criteria, and the choice of mode will depend on the number of target compounds, the decision of whether or not to determine tentatively identified compounds along with other VOCs on the target list, as well as on the analytical system characteristics.

11.1.3 Specific criteria for each Title III compound on the target compound list must be met by the analytical system. These criteria were established by examining summary data from EPA's Toxics Air Monitoring System Network and the Urban Air Toxics Monitoring Program network. Details for the determination of each of the criteria follow.

11.2 Method Detection Limit

11.2.1 The procedure chosen to define the method detection limit is that given in the *Code of Federal Regulations* (40 CFR 136 Appendix B).

11.2.2 The method detection limit is defined for each system by making seven replicate measurements of the compound of interest at a concentration near (within a factor of five) the expected detection limit, computing the standard deviation for the seven replicate concentrations, and multiplying this value by 3.14 (i.e., the Student's t value for 99 percent confidence for seven values). Employing this approach, the detection limits given in Table 4 were obtained for some of the VOCs of interest.

11.3 Replicate Precision

11.3.1 The measure of replicate precision used for this program is the absolute value of the difference between replicate measurements of the sample divided by the average value and expressed as a percentage as follows:

$$\text{percent difference} = \frac{|x_1 - x_2|}{\bar{x}} \times 100$$

where: x_1 = First measurement value.

x_2 = Second measurement value.

$\bar{x}$ = Average of the two values.

11.3.2 There are several factors which may affect the precision of the measurement. The nature of the compound of interest itself such as molecular weight, water solubility, polarizability, etc., each have some effect on the precision, for a given sampling and analytical system. For example, styrene, which is classified as a polar VOC, generally shows slightly poorer precision than the bulk of nonpolar VOCs. A primary influence on precision is the concentration level of the compound of interest in the sample, i.e., the precision degrades as the concentration approaches the detection limit. A conservative measure was obtained from replicate analysis of "real world" canister samples from the TAMS and UATMP networks. These data are summarized in Table 5 and suggest that a replicate precision value of 25 percent can be achieved for each of the target compounds.

11.4 Audit Accuracy

11.4.1 A measure of analytical accuracy is the degree of agreement with audit standards. Audit accuracy is defined as the difference between the nominal concentration of the audit compound and the measured value divided by the audit value and expressed as a percentage, as illustrated in the following equation:

$$\text{Audit Accuracy, \%} = \frac{\text{Spiked Value} - \text{Observed Value}}{\text{Spiked Value}} \times 100$$

11.4.2 Audit accuracy results for TAMS and UATMP analyses are summarized in Table 6 and were used to form the basis for a selection of 30 percent as the performance criterion for audit accuracy.

12. References

1. *Compendium of Methods for the Determination of Toxic Organic Compounds in Ambient Air: Method TO-14A, Second Edition*, U. S. Environmental Protection Agency, Research Triangle Park, NC, EPA 600/625/R-96/010b, January 1997.

2. Winberry, W. T., Jr., et al., *Statement-of-Work (SOW) for the Analysis of Air Toxics From Superfund Sites*, U. S. Environmental Protection Agency, Office of Solid Waste, Contract Laboratory Program, Washington, D.C., Draft Report, June 1990.

3. Coutant, R.W., *Theoretical Evaluation of Stability of Volatile Organic Chemicals and Polar Volatile Organic Chemicals in Canisters*, U. S. Environmental Protection Agency, EPA Contract No. 68-DO-0007, Work Assignment No. 45, Subtask 2, Battelle, Columbus, OH, June 1993.

4. Kelly, T.J., Mukund, R., Gordon, S.M., and Hays, M.J., *Ambient Measurement Methods and Properties of the 189 Title III Hazardous Air Pollutants*, U. S. Environmental Protection Agency, EPA Contract No. 68-DO-0007, Work Assignment 44, Battelle, Columbus, OH, March 1994.

5. Kelly T. J. and Holdren, M.W., "Applicability of Canisters for Sample Storage in the Determination of Hazardous Air Pollutants," *Atmos. Environ.*, Vol. 29, 2595-2608, May 1995.

6. Kelly, T.J., Callahan, P.J., Pleil, J.K., and Evans, G.E., "Method Development and Field Measurements for Polar Volatile Organic Compounds in Ambient Air," *Environ. Sci. Technol.*, Vol. 27, 1146-1153, 1993.

7. McClenny, W.A., Oliver, K.D. and Daughtrey, E.H.., Jr. "Dry Purging of Solid Adsorbent Traps to Remove Water Vapor Before Thermal Desorption of Trace Organic Gases," *J. Air and Waste Manag. Assoc.*, Vol. 45, 792-800, June 1995.

8. Whitaker, D.A., Fortmann, R.C. and Lindstrom, A.B. "Development and Testing of a Whole Air Sampler for Measurement of Personal Exposures to Volatile Organic Compounds," *Journal of Exposure Analysis and Environmental Epidemiology*, Vol. 5, No. 1, 89-100, January 1995.

9. Pleil, J.D. and Lindstrom, A.B., "Collection of a Single Alveolar Exhaled Breath for Volatile Organic Compound Analysis," *American Journal of Industrial Medicine*, Vol. 28, 109-121, 1995.

10. Pleil, J.D. and McClenny, W.A., "Spatially Resolved Monitoring for Volatile Organic Compounds Using Remote Sector Sampling," *Atmos. Environ.*, Vol. 27A, No. 5, 739-747, August 1993.

11. Holdren, M.W., et al., Unpublished Final Report, EPA Contract 68-DO-0007, Battelle, Columbus, OH. Available from J.D. Pleil, MD-44, U. S. Environmental Protection Agency, Research Triangle Park, NC, 27711, 919-541-4680.

12. Morris, C.M., Burkley, R.E. and Bumgarner, J.E., "Preparation of Multicomponent Volatile Organic Standards Using Dilution Bottles," *Anal. Letts*., Vol. 16 (A20), 1585-1593, 1983.

13. Pollack, A.J., Holdren, M.W., "Multi-Adsorbent Preconcentration and Gas Chromatographic Analysis of Air Toxics With an Automated Collection/Analytical System," in the *Proceedings of the 1990 EPA/A&WMA International Symposium of Measurement of Toxic and Related Air Pollutants*, U. S. Environmental Protection Agency, Research Triangle Park, NC, EPA/600/9-90-026, May 1990.

14. Stephenson, J.H.M., Allen, F., Slagle, T., "Analysis of Volatile Organics in Air via Water Methods" in *Proceedings of the 1990 EPA/A&WMA International Symposium on Measurement of Toxic and Related Air Pollutants*, U. S. Environmental Protection Agency, Research Triangle Park, NC, EPA 600/9-90-026, May 1990.

15. Oliver, K. D., Adams, J. R., Davehtrey, E. H., Jr., McClenny, W. A., Young, M. J., and Parade, M. A., "Techniques for Monitoring Toxices VOCs in Air: Sorbent Preconcentration Closed-Cycle Cooler Cryofocusing, and GC/MS Analysis," *Environ. Sci. Technol.*, Vol. 30, 1938-1945, 1996.

APPENDIX A.

LISTING OF SOME COMMERCIAL WATER MANAGEMENT SYSTEMS USED WITH AUTOGC SYSTEMS

Tekmar Dohrman Company
7143 East Kemper Road
Post Office Box 429576
Cincinnati, Ohio 45242-9576
(513) 247-7000
(513) 247-7050 (Fax)
(800) 543-4461
[Moisture control module]

Entech Laboratory Automation
950 Enchanted Way No. 101
Simi Valley, California 93065
(805) 527-5939
(805) 527-5687 (Fax)
[Microscale Purge and Trap]

Dynatherm Analytical Instruments
Post Office Box 159
Kelton, Pennsylvania 19346
(215) 869-8702
(215) 869-3885 (Fax)
[Thermal Desorption System]

XonTech Inc.
6862 Hayenhurst Avenue
Van Nuys, CA 91406
(818) 787-7380
(818) 787-4275 (Fax)
[Multi-adsorbent trap/dry purge]

Graseby
500 Technology Ct.
Smyrna, Georgia 30082
(770) 319-9999
(770) 319-0336 (Fax)
(800) 241-6898
[Controlled Desorption Trap]

Varian Chromatography System
2700 Mitchell Drive
Walnut Creek, California 94898
(510) 945-2196
(510) 945-2335 (FAX)
[Variable Temperature Adsorption Trap]

APPENDIX B.

COMMENT ON CANISTER CLEANING PROCEDURES

The canister cleaning procedures given in Section 8.4 require that canister pressure be reduced to <0.05mm Hg before the cleaning process is complete. Depending on the vacuum system design (diameter of connecting tubing, valve restrictions, etc.) and the placement of the vacuum gauge, the achievement of this value may take several hours. In any case, the pressure gauge should be placed near the canisters to determine pressure. The objective of requiring a low pressure evacuation during canister cleaning is to reduce contaminants. If canisters can be routinely certified (<0.2 ppbv for target compounds) while using a higher vacuum, then this criteria can be relaxed. However, the ultimate vacuum achieved during cleaning should always be <0.2mm Hg.

Canister cleaning as described in Section 8.4 and illustrated in Figure 10 requires components with special features. The vacuum gauge shown in Figure 10 must be capable of measuring 0.05mm Hg with less than a 20% error. The vacuum pump used for evacuating the canister must be noncontaminating while being capable of achieving the 0.05 mm Hg vacuum as monitored near the canisters. Thermoelectric vacuum gauges and turbomolecular drag pumps are typically being used for these two components.

An alternate to achieving the canister certification requirement of <0.2 ppbv for all target compounds is the criteria used in Compendium Method TO-12 that the total carbon count be <10ppbC. This check is less expensive and typically more exacting than the current certification requirement and can be used if proven to be equivalent to the original requirement. This equivalency must be established by comparing the total nonmethane organic carbon (TNMOC) expressed in ppbC to the requirement that individual target compounds be <0.2 ppbv for a series of analytical runs.

APPENDIX C.

LISTING OF COMMERCIAL MANUFACTURERS AND RE-SUPPLIERS OF SPECIALLY-PREPARED CANISTERS

BRC/Rasmussen
17010 NW Skyline Blvd.
Portland, Oregon 97321
(503) 621-1435

Meriter
1790 Potrero Drive
San Jose, CA 95124
(408) 265-6482

Restek Corporation
110 Benner Circle
Bellefonte, PA 16823-8812
(814) 353-1300
(800) 356-1688

Scientific Instrumentation Specialists
P.O. Box 8941
815 Courtney Street
Moscow, ID 83843
(208) 882-3860

Graseby
500 Technology Ct.
Smyrna, Georgia 30082
(404) 319-9999
(800) 241-6898

XonTech Inc.
6862 Hayenhurst Avenue
Van Nuys, CA 91406
(818) 787-7380

APPENDIX D.

LISTING OF COMMERCIAL SUPPLIERS OF PERMEATION TUBES AND SYSTEMS

Kin-Tek
504 Laurel St.
Lamarque, Texas 77568
(409) 938-3627
(800) 326-3627

Vici Metronics, Inc.
2991 Corvin Drive
Santa Clara, CA 95051
(408) 737-0550

Analytical Instrument Development, Inc.
Rt. 41 and Newark Rd.
Avondale, PA 19311
(215) 268-3181

Ecology Board, Inc.
9257 Independence Ave.
Chatsworth, CA 91311
(213) 882-6795

Tracor, Inc.
6500 Tracor Land
Austin, TX
(512) 926-2800

Metronics Associates, Inc.
3201 Porter Drive
Standford Industrial Park
Palo Alto, CA 94304
(415) 493-5632

TABLE 1. VOLATILE ORGANIC COMPOUNDS ON THE TITLE III CLEAN AIR AMENDMENT LIST--MEMBERSHIP IN COMPENDIUM METHOD TO-14A LIST AND THE SOW-CLP LIST OF VOCs

Compound	CAS No.	BP (°C)	v.p. (mmHg)[1]	MW[1]	TO-14A	CLP-SOW
Methyl chloride (chloromethane); CH3Cl	74-87-3	-23.7	3.8 x 10	50.5	X	X
Carbonyl sulfide; COS	463-58-1	-50.0	3.7 x 10	60.1		
Vinyl chloride (chloroethene); C2H3Cl	75-01-4	-14.0	3.2 x 10	62.5	X	X
Diazomethane; CH2N2	334-88-3	-23.0	2.8 x 10	42.1		
Formaldehyde; CH2O	50-00-0	-19.5	2.7 x 10	30		
1,3-Butadiene; C4H6	106-99-0	-4.5	2.0 x 10	54		X
Methyl bromide (bromomethane); CH3Br	74-83-9	3.6	1.8 x 10	94.9	X	X
Phosgene; CCl2O	75-44-5	8.2	1.2 x 10	99		
Vinyl bromide (bromoethene); C2H3Br	593-60-2	15.8	l.l x 10	107		
Ethylene oxide; C2H4O	75-21-8	10.7	1.1 x 10	44		
Ethyl chloride (chloroethane); C2H5Cl	75-00-3	12.5	1.0 x 10	64.5	X	X
Acetaldehyde (ethanal); C2H4O	75-07-0	21.0	952	44		
Vinylidene chloride (1,1-dichloroethylene); C2H2Cl2	75-35-4	31.7	500	97	X	X
Propylene oxide; C3H6O	75-56-9	34.2	445	58		
Methyl iodide (iodomethane); CH3I	74-88-4	42.4	400	141.9		
Methylene chloride; CH2Cl2	75-09-2	40.0	349	84.9	X	X
Methyl isocyanate; C2H3NO	624-83-9	59.6	348	57.1		
Allyl chloride (3-chloropropene); C3H5Cl	107-05-1	44.5	340	76.5	X	X
Carbon disulfide; CS2	75-15-0	46.5	260	76		
Methyl tert-butyl ether; C5H12O	1634-04-4	55.2	249	86		
Propionaldehyde; C2H5CHO	123-38-6	49.0	235	58.1		
Ethylidene dichloride (1,1-dichloroethane); C2H4Cl2	75-34-3	57.0	230	99	X	

TABLE 1. (continued)

Compound	CAS No.	BP (°C)	v.p. (mmHg)[1]	MW[1]	TO-14A	CLP-SOW
Chloroprene (2-chloro-1,3-butadiene); C4H5Cl	126-99-8	59.4	226	88.5		
Chloromethyl methyl ether; C2H5ClO	107-30-2	59.0	224	80.5		
Acrolein (2-propenal); C3H4O	107-02-8	52.5	220	56		X
1,2-Epoxybutane (1,2-butylene oxide); C4H8O	106-88-7	63.0	163	72		
Chloroform; CHCl3	67-66-3	61.2	160	119	X	X
Ethyleneimine (aziridine); C2H5N	151-56-4	56	160.0	43		
1,1-Dimethylhydrazine; C2H8N2	57-14-7	63	157.0	60.0		
Hexane; C6H14	110-54-3	69.0	120	86.2	X	
1,2-Propyleneimine (2-methylaziridine); C3H7N	75-55-8	66.0	112	57.1		
Acrylonitrile (2-propenenitrile); C3H3N	107-13-1	77.3	100	53	X	
Methyl chloroform (1,1,1-trichloroethane); C2H3Cl3	71-55-6	74.1	100	133.4	X	X
Methanol; CH4O	67-56-1	65.0	92.0	32		X
Carbon tetrachloride; CCl4	56-23-5	76.7	90.0	153.8	X	X
Vinyl acetate; C4H6O2	108-05-4	72.2	83.0	86		X
Methyl ethyl ketone (2-butanone); C4H8O	78-93-3	79.6	77.5	72		X
Benzene; C6H6	71-43-2	80.1	76.0	78	X	X
Acetonitrile (cyanomethane); C2H3N	75-05-8	82	74.0	41.0		X
Ethylene dichloride (1,2-dichloroethane); C2H4Cl2	107-06-2	83.5	61.5	99	X	X
Triethylamine; C6H15N	121-44-8	89.5	54.0	101.2		
Methylhydrazine; CH6N2	60-34-4	87. 8	49.6	46.1		
Propylene dichloride (1,2-dichloropropane); C3H6Cl2	78-87-5	97.0	42.0	113	X	X
2,2,4-Trimethyl pentane C8H18	540-84-l	99.2	40.6	114		
1,4-Dioxane (1,4-Diethylene oxide); C4H8O2	123-91-1	101	37.0	88		
Bis(chloromethyl) ether; C2H4Cl2O	542-88-1	104	30.0	115		
Ethyl acrylate; C5H8O2	140-88-5	100	29.3	100		
Methyl methacrylate; C5H8O2	80-62-6	101	28.0	100.1		

TABLE 1. (continued)

Compound	CAS No.	BP (°C)	v.p. (mmgHg)[1]	MW[1]	TO-14A	CLP-SOW
Methyl methacrylate; C5H8O2	80-62-101	101	28.0	100.1		
1,3-Dichloropropene; C3H4Cl2 (cis)	542-75-6	112	27.8	111	X	X
Toluene; C7H8	108-88-3	111	22.0	92	X	X
Trichloroethylene; C2HCl3	79-01-6	87.0	20.0	131.4	X	X
1,1,2-Trichloroethane; C2H3Cl3	79-00-5	114	19.0	133.4	X	X
Tetrachloroethylene; C2Cl4	127-18-4	121	14.0	165.8	X	X
Epichlorohydrin (1-chloro-2,3-epoxy propane); C3H5ClO	106-89-8	117	12.0	92.5		
Ethylene dibromide (1,2-dibromoethane); C2H4Br2	106-93-4	132	11.0	187.9	X	X
N-Nitroso-N-methylurea; C2H5N3O2	684-93-5	124	10.0	103		
2-Nitropropane; C3H7NO2	79-46-9	120	10.0	89		
Chlorobenzene; C6H5Cl	108-90-7	132	8.8	112.6	X	X
Ethylbenzene; C8H10	100-41-4	136	7.0	106	X	X
Xylenes (isomer & mixtures); C8H10	1330-20-7	142	6.7	106.2	X	X
Styrene; C8H8	100-42-5	145	6.6	104	X	X
p-Xylene; C8H10	106-42-3	138	6.5	106.2	X	X
m-Xylene; C8H10	108-38-3	139	6.0	106.2	X	X
Methyl isobutyl ketone (hexone); C6H12O	108-10-1	117	6.0	100.2		
Bromoform (tribromomethane); CHBr3	75-25-2	149	5.6	252.8		
l,l,2,2-Tetrachloroethane; C2H2Cl4	79-34-5	146	5.0	167.9	X	X
o-Xylene; C8H10	95-47-6	144	5.0	106.2	X	X
Dimethylcarbamyl chloride; C3H6ClNO	79-44-7	166	4.9	107.6		
N-Nitrosodimethylamine; C2H6N2O	62-75-9	152	3.7	74		
Beta-Propiolactone; C3H4O2	57-57-8	Decomposes at 162	3.4	72		
Cumene (isopropylbenzene); C9Hl2	98-82-8	153	3.2	120		

TABLE 1. (continued)

Compound	CAS No.	BP (°C)	v.p. (mmHg)[1]	MW[1]	TO-14A	CLP-SOW
Cumene (isopropylbenzene); C9H12	98-82-8	153	3.2	120		
Acrylic acid; C3H4O2	79-10-7	141	3.2	72		
N,N-Dimethylformamide; C3H7NO	68-12-2	153	2.7	73		
1,3-Propane sultone; C3H6O3S	1120-71-4	180/30mm	2.0	122.1		
Acetophenone; C8H8O	98-86-2	202	1.0	120		
Dimethyl sulfate; C2H6O4S	77-78-1	188	1.0	126.1		
Benzyl chloride (a-chlorotoluene); C7H7Cl	100-44-7	179	1.0	126.6	X	X
1,2-Dibromo-3-chloropropane; C3H5Br2Cl	96-12-8	196	0.80	236.4		
Bis(2-Chloroethyl)ether; C4H8Cl2O	111-44-4	178	0.71	143		
Chloroacetic acid; C2H3ClO2	79-11-8	189	0.69	94.5		
Aniline (aminobenzene); C6H7N	62-53-3	184	0.67	93		
1,4-Dichlorobenzene (p-); C6H4Cl2	106-46-7	173	0.60	147	X	X
Ethyl carbamate (urethane); C3H7NO2	51-79-6	183	0.54	89		
Acrylamide; C3H5NO	79-06-1	125/25 mm	0.53	71		
N,N-Dimethylaniline; C8H11N	121-69-7	192	0.50	121		
Hexachloroethane; C2Cl6	67-72-1	Sublimes at 186	0.40	236.7		
Hexachlorobutadiene; C4Cl6	87-68-3	215	0.40	260.8	X	X
Isophorone; C9H14O	78-59-1	215	0.38	138.2		
N-Nitrosomorpholine; C4H8N2O2	59-89-2	225	0.32	116.1		
Styrene oxide; C8H8O	96-09-3	194	0.30	120.2		
Diethyl sulfate; C4H10O4S	64-67-5	208	0.29	154		
Cresylic acid (cresol isomer mixture);C7H8O	1319-77-3	202	0.26	108		
o-Cresol; C7H8O	95-48-7	191	0.24	108		
Catechol (o-hydroxyphenol); C6H6O2	120-80-9	240	0.22	110		
Phenol; C6H6O	108-95-2	182	0.20	94		

TABLE 1. (continued)

Compound	CAS No.	BP (°C)	v.p. (mmHg)[1]	MW[1]	TO-14A	CLP-SOW
Catechol (o-hydroxyphenol); C6H6O2	120-80-9	240	0.22	110		
Phenol; C6H6O	108-95-2	182	0.20	94		
1,2,4-Trichlorobenzene; C6H3Cl3	120-82-1	213	0.18	181.5	X	X
nitrobenzene; C6H5NO2	98-95-3	211	0.15	123		

[1]Vapor pressure (v.p.), boiling point (BP) and molecularweight (MW) data from:
(a)D. L. Jones and J. bursey, "Simultaneous Control of PM-10 and Hazardous Air Pollutants II: Rationale for Selection of Hazardous Air Pollutants as Potential Particulate Matter," Report EPA-452/R-93/013, U. S. Environmental Protection Agency, Research Triangle Park, NC. October 1992;
(b)R. C. Weber, P. A. Parker, and M. Bowser. Vapor Pressure Distribution of Selected Organic Chemicals, Report EPA-600/2-81-021, U. S. Environmental Protection Agency, Cincinnati, OH, February 1981; and
(c)R. C. Weast, ed., "CRC Handbook of Chemistry and Physics," 59th edition, CRC Press, Boca Raton, 1979.

TABLE 2. CHARACTERISTIC MASSES (M/Z) USED FOR QUANTIFYING THE TITLE III CLEAN AIR ACT AMENDMENT COMPOUNDS

Compound	CAS No.	Primary Ion	Secondary Ion
Methyl chloride (chloromethane); CH3Cl	74-87-3	50	52
Carbonyl sulfide; COS	463-S8-1	60	62
Vinyl chloride (chloroethene); C2H3Cl	7S-01-4	62	64
Diazomethane; CH2N2	334-88-3	42	41
Formaldehyde; CH2O	50-00-0	29	30
1,3-Butadiene; C4H6	106-99-0	39	54
Methyl bromide (bromomethane); CH3Br	74-83-9	94	96
Phosgene; CCl2O	75-44-5	63	65
Vinyl bromide (bromoethene); C2H3Br	593-60-2	106	108
Ethylene oxide; C2H4O	75-21-8	29	44
Ethyl chloride (chloroethane); C2H5Cl	75-00-3	64	66
Acetaldehyde (ethanal); C2H4O	75-07-0	44	29, 43
Vinylidene chloride (1,1-dichloroethylene); C2H2Cl2	75-35-4	61	96
Propylene oxide; C3H6O	75-56-9	58	57
Methyl iodide (iodomethane); CH3I	74-88-4	142	127
Methylene chloride; CH2Cl2	75-09-2	49	84, 86
Methyl isocyanate; C2H3NO	624-83-9	57	56
Allyl chloride (3-chloropropene); C3H5Cl	107-05-1	76	41, 78
Carbon disulfide; CS2	75-15-0	76	44, 78
Methyl tert-butyl ether; C5H12O	1634-04-4	73	41, 53
Propionaldehyde; C2H5CHO	123-38-6	58	29, 57
Ethylidene dichloride (1,1-dichloroethane); C2H4Cl2	75-34-3	63	65, 27
Chloroprene (2-chloro-1,3-butadiene); C4H5Cl	126-99-8	88	53, 90
Chloromethyl methyl ether; C2H5ClO	107-30-2	45	29, 49
Acrolein (2-propenal); C3H4O	107-02-8	56	55
1,2-Epoxybutane (1,2-butylene oxide); C4H8O	106-88-7	42	41, 72
Chloroform; CHCl3	67-66-3	83	85, 47
Ethyleneimine (aziridine); C2H5N	151-56-4	42	43
1,1-Dimethylhydrazine; C2H8N2	57-14-7	60	45, 59
Hexane; C6H14	110-54-3	57	41, 43
1,2-Propyleneimine (2-methylazindine); C3H7N	75-55-8	56	57, 42
Acrylonitrile (2-propenenitrile); C3H3N	107-13-1	53	52
Methyl chloroform (1,1,1 trichloroethane); C2H3Cl3	71-55-6	97	99, 61
Methanol; CH4O	67-56-1	31	29
Carbon tetrachloride; CCl4	56-23-5	117	119
Vinyl acetate; C4H6O2	108-05-4	43	86
Methyl ethyl ketone (2-butanone); C4H8O	78-93-3	43	72

TABLE 2. (continued)

Compound	CAS No.	Primary Ion	Secondary Ion
Benzene; C6H6	71-43-2	78	77,50
Acetonitrile (cyanomethane); C2H3N	75-05-8	41	40
Ethylene dichloride (1,2-dichloroethane); C2H4Cl2	107-06-2	62	64, 27
Triethylamine; C6H15N	121-44-8	86	58, 101
Methylhydrazine; CH6N2	60-34-4	46	31, 45
Propylene dichloride (1,2-dichloropropane); C3H6Cl2	78-87-5	63	41, 62
2,2,4-Trimethyl pentane; C8H18	540-84-1	57	41, 56
1,4-Dioxane (1,4 Diethylene oxide); C4H8O2	123-91-1	88	58
Bis(chloromethyl) ether; C2H4Cl2O	542-88-1	79	49, 81
Ethyl acrylate; C5H8O2	140-88-5	55	73
Methyl methacrylate; C5H8O2	80-62-6	41	69, 100
1,3-Dichloropropene; C3H4Cl2 (cis)	542-75-6	75	39, 77
Toluene; C7H8	108-88-3	91	92
Trichloethylene; C2HCl3	79-01-6	130	132, 95
1,1,2-Trichloroethane; C2H3Cl3	79-00-5	97	83, 61
Tetrachloroethylene; C2Cl4	127-18-4	166	164, 131
Epichlorohydrin (l-chloro-2,3-epoxy propane); C3H5ClO	106-89-8	57	49, 62
Ethylene dibromide (1,2-dibromoethane); C2H4Br2	106-93-4	107	109
N-Nitrso-N-methylurea; C2H5N3O2	684-93-5	60	44, 103
2-Nitropropane; C3H7NO2	79-46-9	43	41
Chlorobenzene; C6H5Cl	108-90-7	112	77, 114
Ethylbenzene; C8H10	100-41-4	91	106
Xylenes (isomer & mixtures); C8H10	1330-20-7	91	106
Styrene; C8H8	100-42-5	104	78, 103
p-Xylene; C8H10	106-42-3	91	106
m-Xylene; C8H10	108-38-3	91	106
Methyl isobutyl ketone (hexone); C6H12O	108-10-1	43	58, 100
Bromoform (tribromomethane); CHBr3	75-25-2	173	171, 175
1,1,2,2-Tetrachloroethane; C2H2Cl4	79-34-5	83	85
o-Xylene; C8H10	95-47-6	91	106
Dimethylcarbamyl chloride; C3H6ClNO	79-44-7	72	107
N-Nitrosodimethylamine; C2H6N2O	62-75-9	74	42
Beta-Propiolactone; C3H4O2	57-57-8	42	43
Cumene (isopropylbenzene); C9H12	98-82-8	105	120
Acrylic acid; C3H4O2	79-10-7	72	45, 55
N,N-Dimethylformamide; C3H7NO	68-12-2	73	42, 44
1,3-Propane sultone; C3H6O3S	1120-71-4	58	65, 122

TABLE 2. (continued)

Compound	CAS No.	Primary Ion	Secondary Ion
Acetophenone; C8H8O	98-86-2	105	77,120
Dimethyl sulfate; C2H6O4S	77-78-1	95	66,96
Benzyl chloride (a-chlorotoluene); C7H7Cl	100-44-7	91	126
1,2-Dibromo-3-chloropropane; C3H5Br2Cl	96-12-8	57	155, 157
Bis(2-Chloroethyl)ether; C4H8Cl2O	111-44-4	93	63, 95
Chloroacetic acid; C2H3ClO2	79-11-8	50	45, 60
Aniline (aminobenzene); C6H7N	62-53-3	93	66
1,4-Dichlorobenzene (p-); C6H4Cl2	106-46-7	146	148, 111
Ethyl carbamate (urethane); C3H7NO2	51-79-6	31	44, 62
Acrylamide; C3H5NO	79-06-1	44	55, 71
N,N-Dimethylaniline; C8H11N	121-69-7	120	77, 121
Hexachloroethane; C2Cl6	67-72-1	201	199, 203
Hexachlorobutadiene; C4Cl6	87-68-3	225	227, 223
Isophorone; C9H14O	78-59-1	82	138
N-Nitrosomorpholine; C4H8N2O2	59-89-2	56	86, 116
Styrene oxide; C8H8O	96-09-3	91	120
Diethyl sulfate; C4H10O4S	64-67-5	45	59, 139
Cresylic acid (cresol isomer mixture); C7H8O	1319-77-3		
o-Cresol; C7H8O	95-48-7	108	107
Catechol (o-hydroxyphenol); C6H6O2	120-80-9	110	64
Phenol; C6H6O	108-95-2	94	66
1,2,4-Trichlorobenzene; C6H3Cl3	120-82-1	180	182, 184
Nitrobenzene; C6H5NO2	98-95-3	77	51, 123

TABLE 3. REQUIRED BFB KEY IONS AND ION ABUNDANCE CRITERIA

Mass	Ion Abundance Criteria[1]
50	8.0 to 40.0 Percent of m/e 95
75	30.0 to 66.0 Percent of m/e 95
95	Base Peak, 100 Percent Relative Abundance
96	5.0 to 9.0 Percent of m/e 95 (See note)
173	Less than 2.0 Percent of m/e 174
174	50.0 to 120.0 Percent of m/e 95
175	4.0 to 9.0 Percent of m/e 174
176	93.0 to 101.0 Percent of m/e 174
177	5.0 to 9.0 Percent of m/e 176

[1]All ion abundances must be normalized to m/z 95, the nominal base peak, even though the ion abundance of m/z 174 may be up to 120 percent that of m/z 95.

TABLE 4. METHOD DETECTION LIMITS (MDL)[1]

TO-14A List	Lab #1, SCAN	Lab #2, SIM
Benzene	0.34	0.29
Benzyl Chloride	--	--
Carbon tetrachloride	0.42	0.15
Chlorobenzene	0.34	0.02
Chloroform	0.25	0.07
1,3-Dichlorobenzene	0.36	0.07
1,2-Dibromoethane	--	0.05
1,4-Dichlorobenzene	0.70	0.12
1,2-Dichlorobenzene	0.44	--
1,1-Dichloroethane	0.27	0.05
1,2-Dichloroethane	0.24	--
1,1-Dichloroethene	--	0.22
cis-1,2-Dichloroethene	--	0.06
Methylene chloride	1.38	0.84
1,2-Dichloropropane	0.21	--
cis-1,3-Dichloropropene	0.36	--
trans-1,3-Dichloropropene	0.22	--
Ethylbenzene	0.27	0.05
Chloroethane	0.19	--
Trichlorofluoromethane	--	--
1,1,2-Trichloro-1,2,2-trifluoroethane		--
1,2-Dichloro-1,1,2,2-tetrafluoroethane	--	--
Dichlorodifluoromethane	--	--
Hexachlorobutadiene	--	--
Bromomethane	0.53	--
Chloromethane	0.40	--
Styrene	1.64	0.06
1,1,2,2-Tetrachloroethane	0.28	0.09
Tetrachloroethene	0.75	0.10
Toluene	0.99	0.20
1,2,4-Trichlorobenzene	--	--
1,1,1-Trichloroethane	0.62	0.21
1,1,2-Trichloroethane	0.50	--
Trichloroethene	0.45	0.07
1,2,4-Trimethylbenzene	--	--
1,3,5-Trimethylbenzene	--	--
Vinyl Chloride	0.33	0.48
m,p-Xylene	0.76	0.08
o-Xylene	0.57	0.28

[1]Method Detection Limits (MDLs) are defined as the product of the standard deviation of seven replicate analyses and the student's "t" test value for 99% confidence. For Lab #2, the MDLs represent an average over four studies. MDLs are for MS/SCAN for Lab #1 and for MS/SIM for Lab #2.

TABLE 5. SUMMARY OF EPA DATA ON REPLICATE PRECISION (RP) FROM EPA NETWORK OPERATIONS[1]

Monitoring Compound Identification	EPA's Urban Air Toxics Monitoring Program (UATMP)			EPA's Toxics Air Monitoring Stations (TAMS)		
	%RP	#	ppbv	%RP	#	ppbv
Dichlorodifluoromethane	--		--	13.9	47	0.9
Methylene chloride	16.3	07	4.3	19.4	47	0.6
1,2-Dichloroethane	36.2	31	1.6	--	--	--
1,1,1-Trichloroethane	14.1	44	1.0	10.6	47	2.0
Benzene	12.3	56	1.6	4.4	47	1.5
Trichloroethene	12.8	08	1.3	--	--	--
Toluene	14.7	76	3.1	3.4	47	3.1
Tetrachloroethene	36.2	12	0.8	--	--	--
Chlorobenzene	20.3	21	0.9	--	--	--
Ethylbenzene	14.6	32	0.7	5.4	47	0.5
m-Xylene	14.7	75	4.0	5.3	47	1.5
Styrene	22.8	59[2]	1.1	8.7	47	0.2[2]
o-Xylene	--		--	6.0	47	0.5
p-Xylene	--					
1,3-Dichlorobenzene	49.1	06	0.6	--	--	--
1,4-Dichlorobenzene	14.7	14	6.5	--	--	--

[1]Denotes the number of replicate or duplicate analysis used to generate the statistic. The replicate precision is defined as the mean ratio of absolute difference to the average value.
[2]Styrene and o-xylene coelute from the GC column used in UATMP. For the TAMS entries, both values were below detection limits for 18 of 47 replicates and were not included in the calculation.

TABLE 6. AUDIT ACCURACY (AA) VALUES[1] FOR SELECTED COMPENDIUM METHOD TO-14A COMPOUNDS

Selected Compounds From TO-14A List	FY-88 TAMS AA(%), N=30	FY-88 UATMP AA(%), N=3
Vinyl chloride	4.6	17.9
Bromomethane	--	6.4
Trichlorofluoromethane	6.4	--
Methylene chloride	8.6	31.4
Chloroform	--	4.2
1,2-Dichloroethane	6.8	11.4
1,1,1-Trichloroethane	18.6	11.3
Benzene	10.3	10.1
Carbon tetrachloride	12.4	9.4
1,2-Dichloropropane	--	6.2
Trichloroethene	8.8	5.2
Toluene	8.3	12.5
Tetrachloroethene	6.2	--
Chlorobenzene	10.5	11.7
Ethylbenzene	12.4	12.4
o-Xylene	16.2	21.2

[1]Audit accuracy is defined as the relative difference between the audit measurement result and its nominal value divided by the nominal value. N denotes the number of audits averaged to obtain the audit accuracy value. Information is not available for other TO-14A compounds because they were not present in the audit materials.

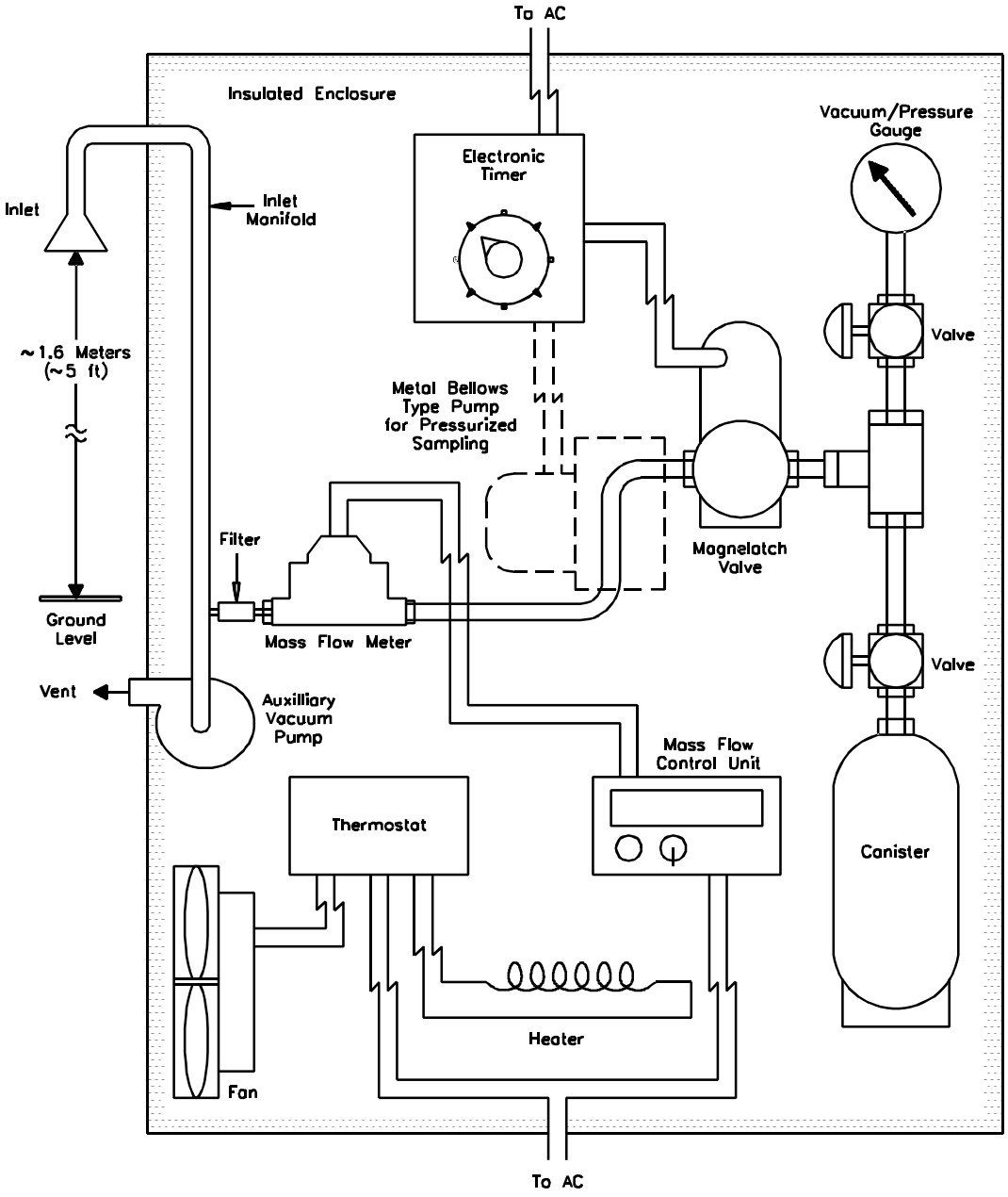

Figure 1. Sampler configuration for subatmospheric pressure or pressurized canister sampling.

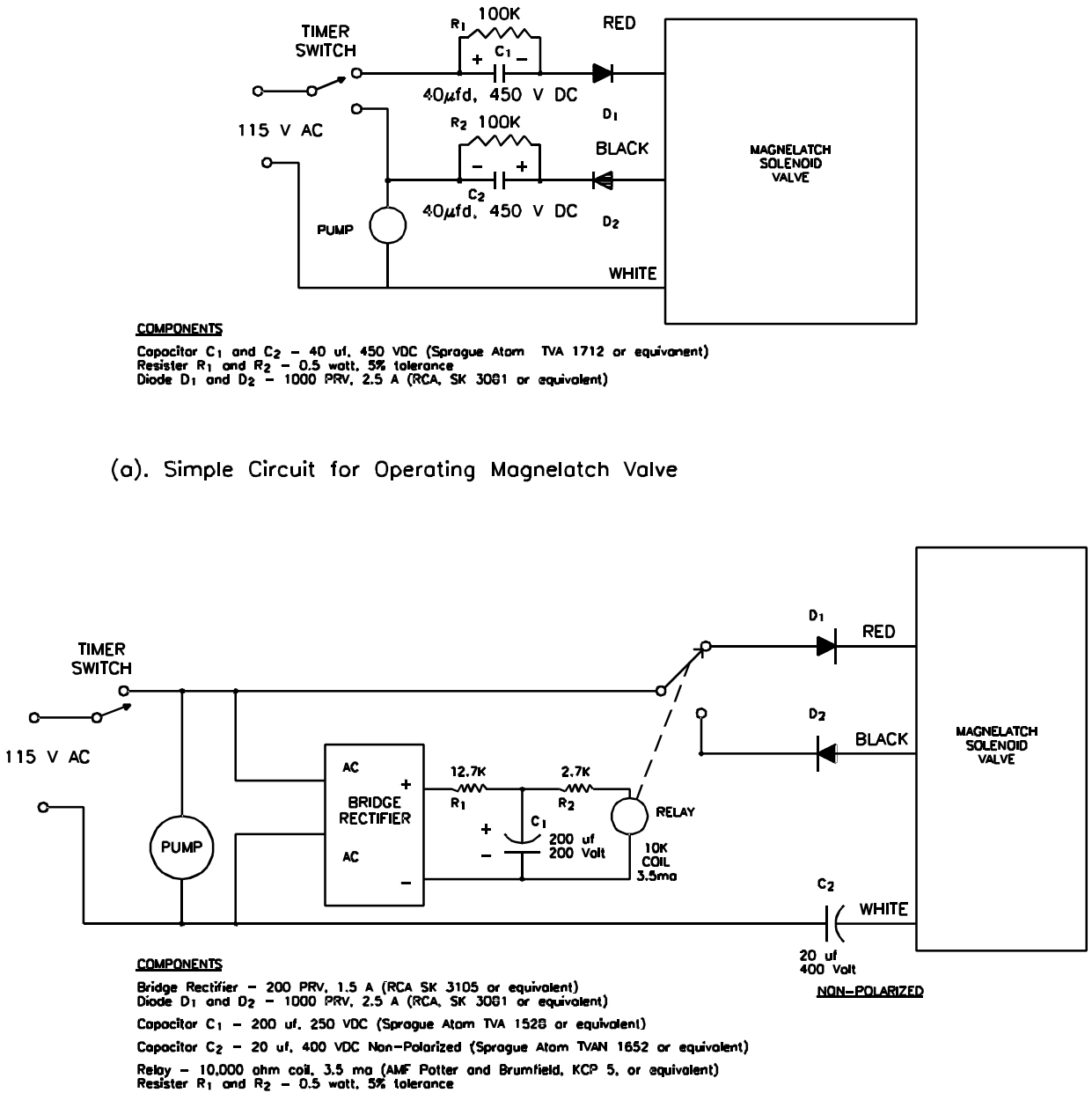

Figure 2. Electrical pulse circuits for driving Skinner magnelatch solenoid valve with mechanical timer.

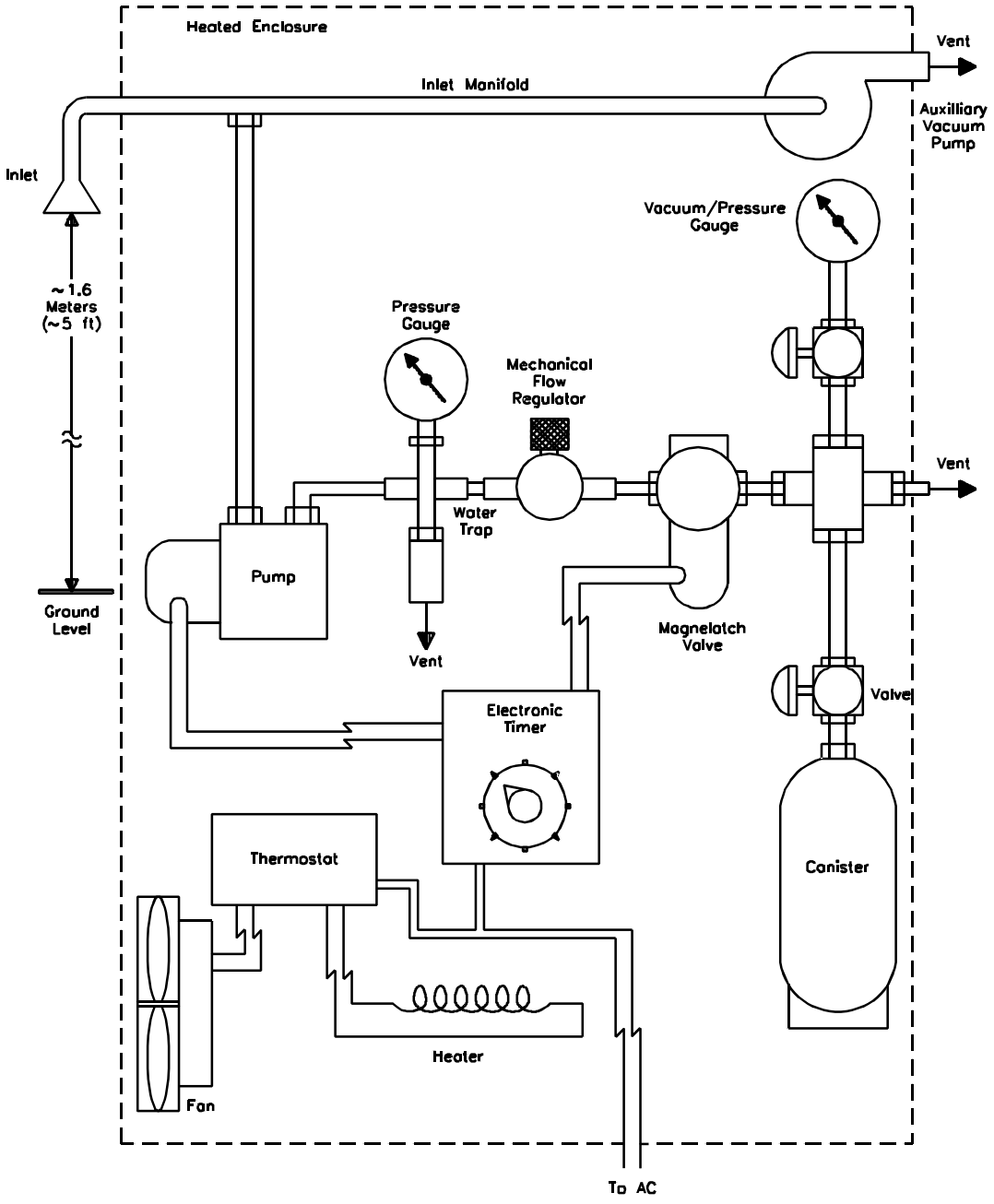

Figure 3. Alternative sampler configuration for pressurized canister sampling.

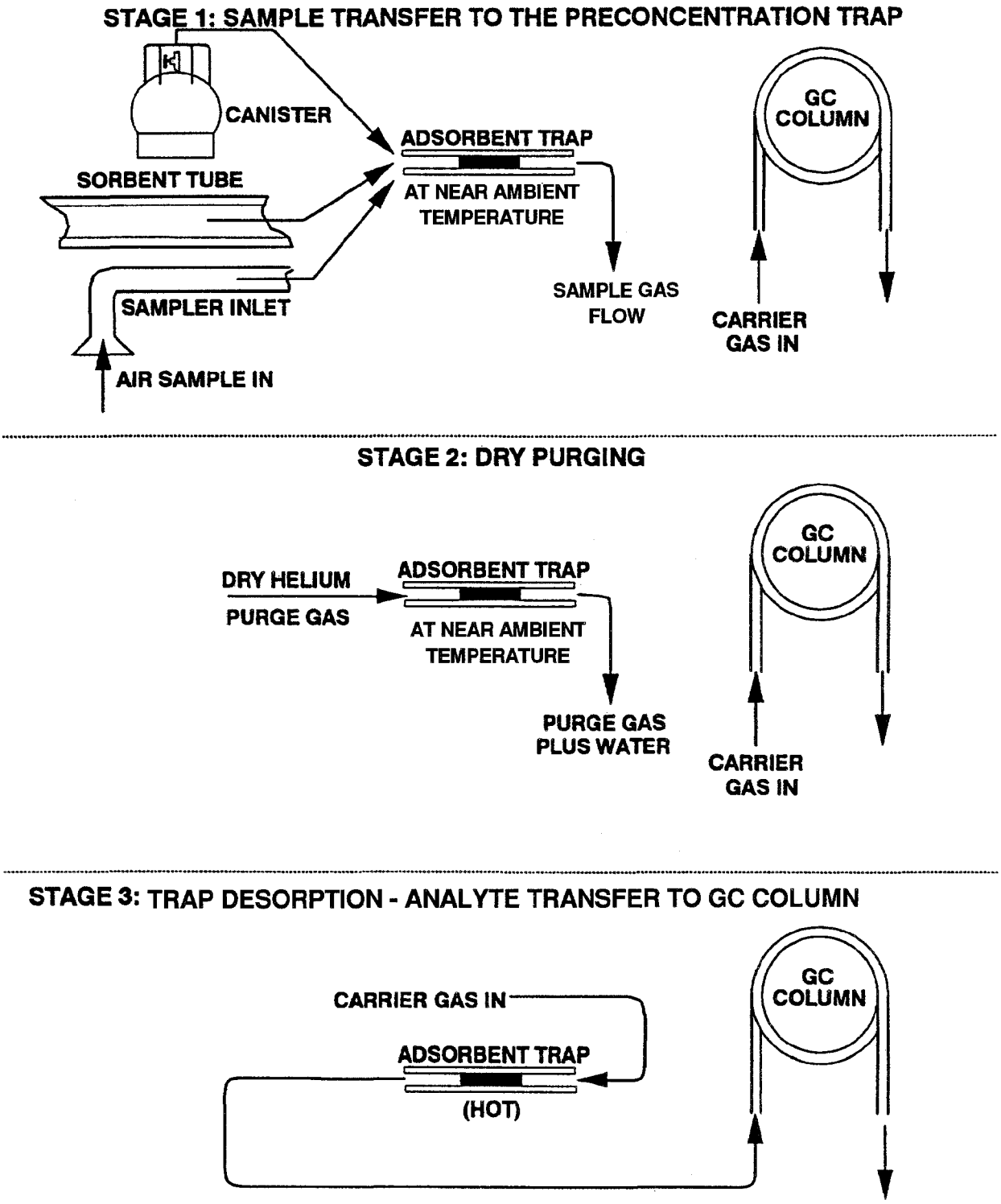

Figure 4. Illustration of three stages of dry purging of adsorbent trap.

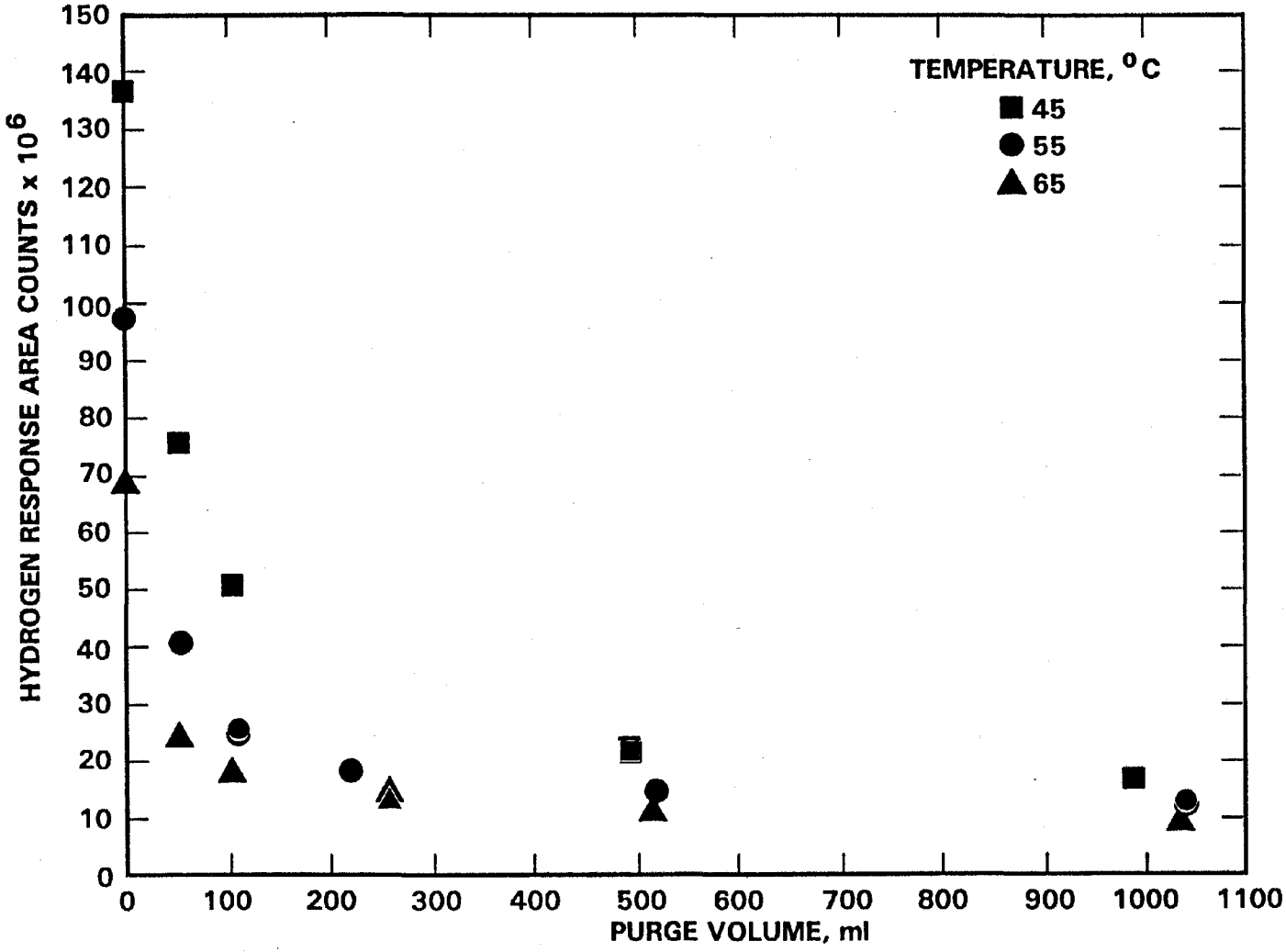

Figure 5. Residual water vapor on VOC concentrator vs. dry He purge volume.

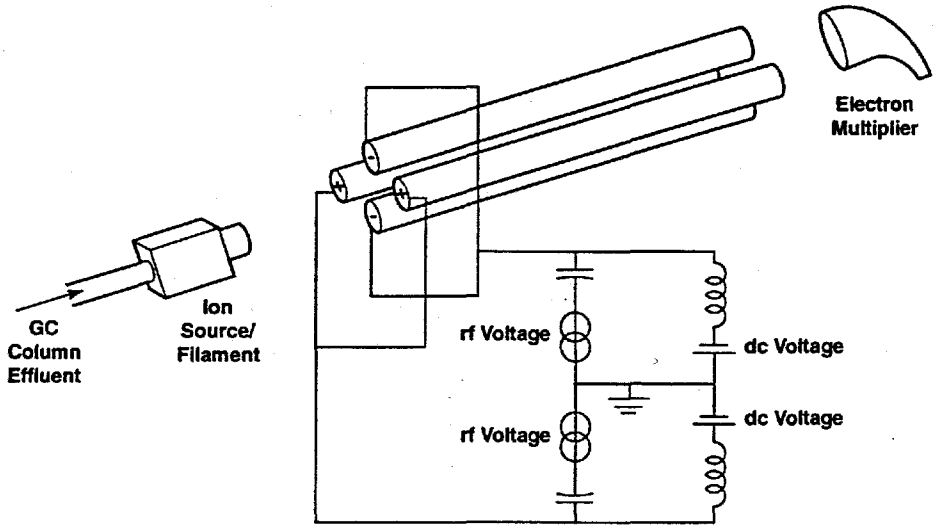

Figure 6. Simplified diagram of a quadrupole mass spectrometer.

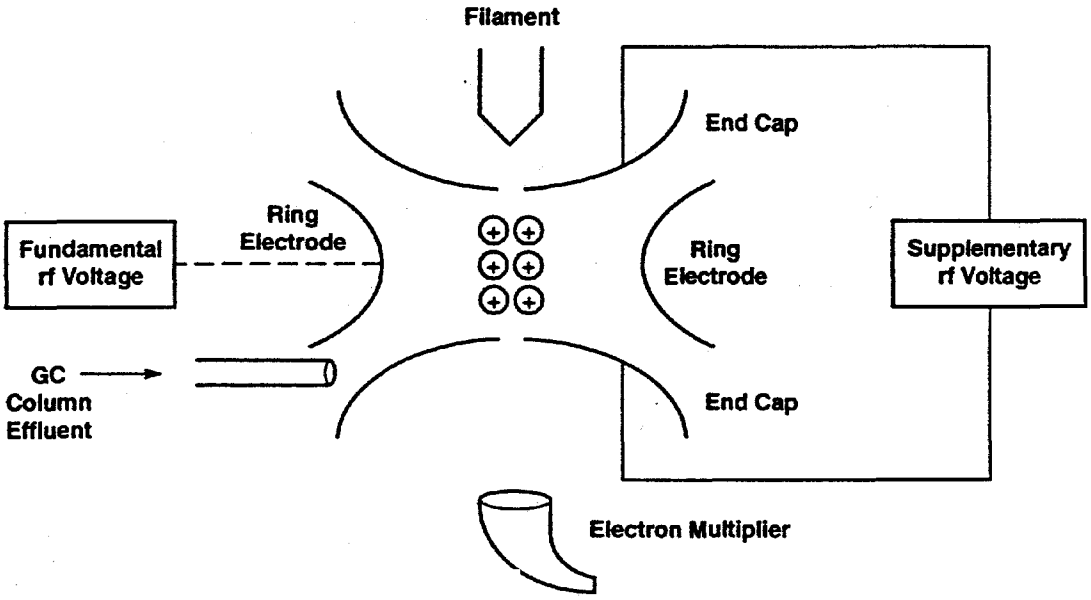

Figure 7. Simplified diagram of an ion trap mass spectrometer.

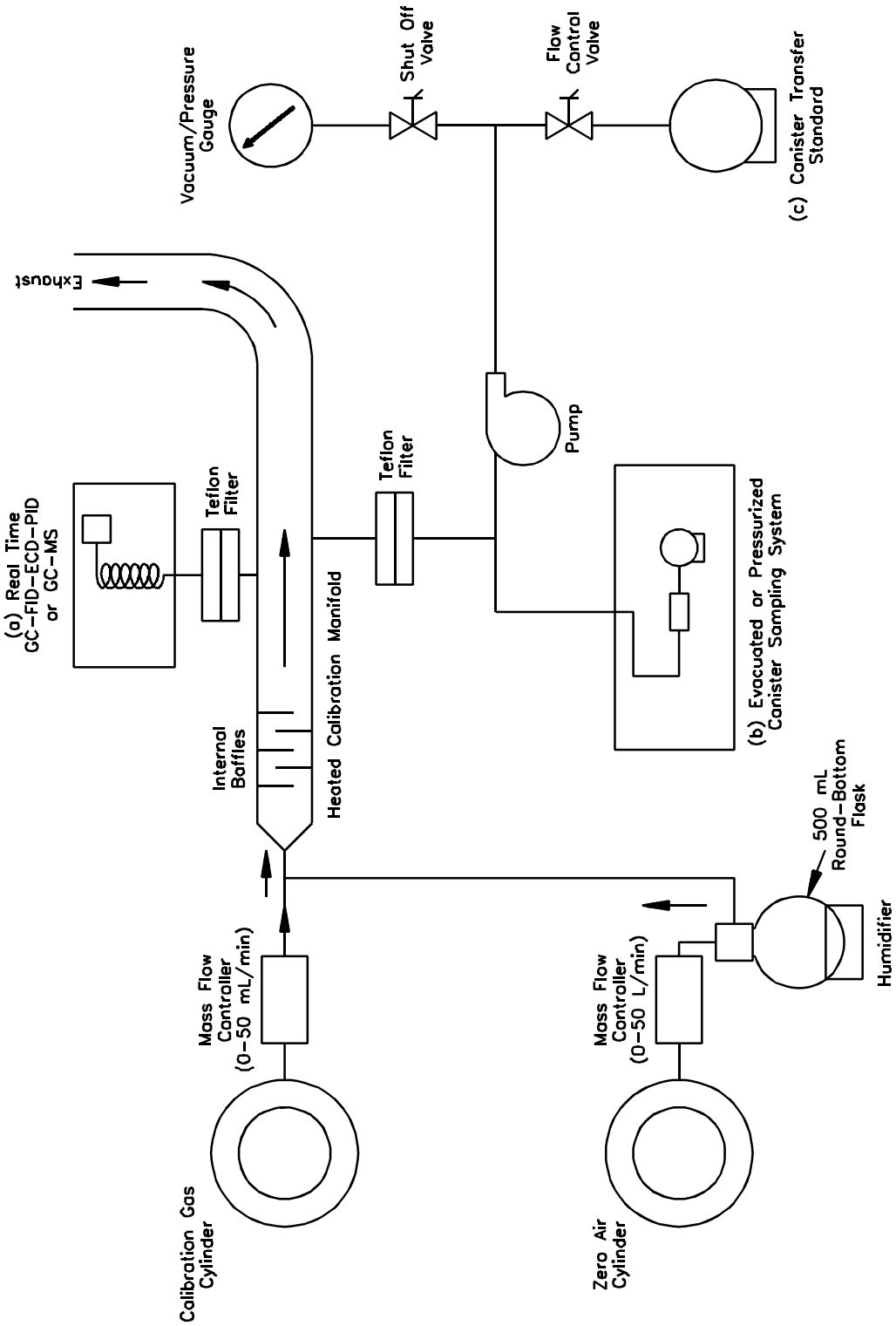

Figure 8. Schematic diagram of calibration system and manifold for (a) analytical system calibration, (b) testing canister sampling system and (c) preparing canister transfer standards.

COMPENDIUM METHOD TO-15
CANISTER SAMPLING FIELD TEST DATA SHEET

A.GENERAL INFORMATION

SITE LOCATION: _____
SITE ADDRESS: _____
_____
SAMPLING DATE: _____

SHIPPING DATE: _____
CANISTER SERIAL NO.: _____
SAMPLER ID: _____
OPERATOR: _____
CANISTER LEAK
CHECK DATE: _____

B. SAMPLING INFORMATION

TEMPERATURE

	INTERIOR	AMBIENT	MAXIMUM	MINIMUM
START				
STOP				

PRESSURE

CANISTER PRESSURE	

SAMPLING TIMES

	LOCAL TIME	ELAPSED TIME METER READING
START		
STOP		

FLOW RATES

MANIFOLD FLOW RATE	CANISTER FLOW RATE	FLOW CONTROLLER READOUT

SAMPLING SYSTEM CERTIFICATION DATE: _____
QUARTERLY RECERTIFICATION DATE: _____

C. LABORATORY INFORMATION

DATA RECEIVED: _____
RECEIVED BY: _____
INITIAL PRESSURE: _____
FINAL PRESSURE: _____
DILUTION FACTOR: _____
ANALYSIS
GC-FID-ECD DATE: _____
GC-MSD-SCAN DATE: _____
GC-MSD-SIM DATE: _____
RESULTS*: _____
_____
GC-FID-ECD: _____
GC-MSD-SCAN: _____
GC-MSD-SIM: _____

_____
SIGNATURE/TITLE

Figure 9. Canister sampling field test data sheet (FTDS).

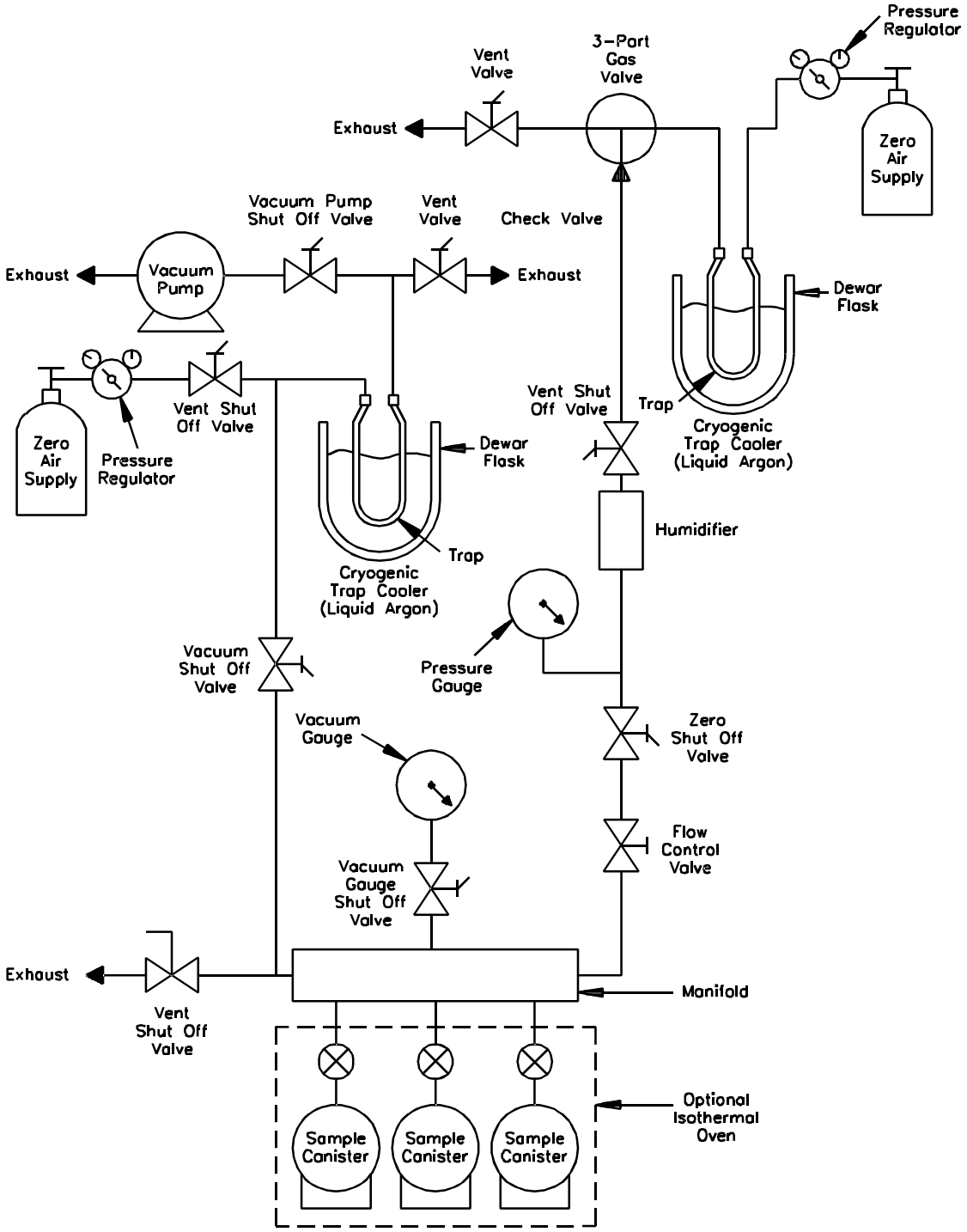

Figure 10. Canister cleaning system.

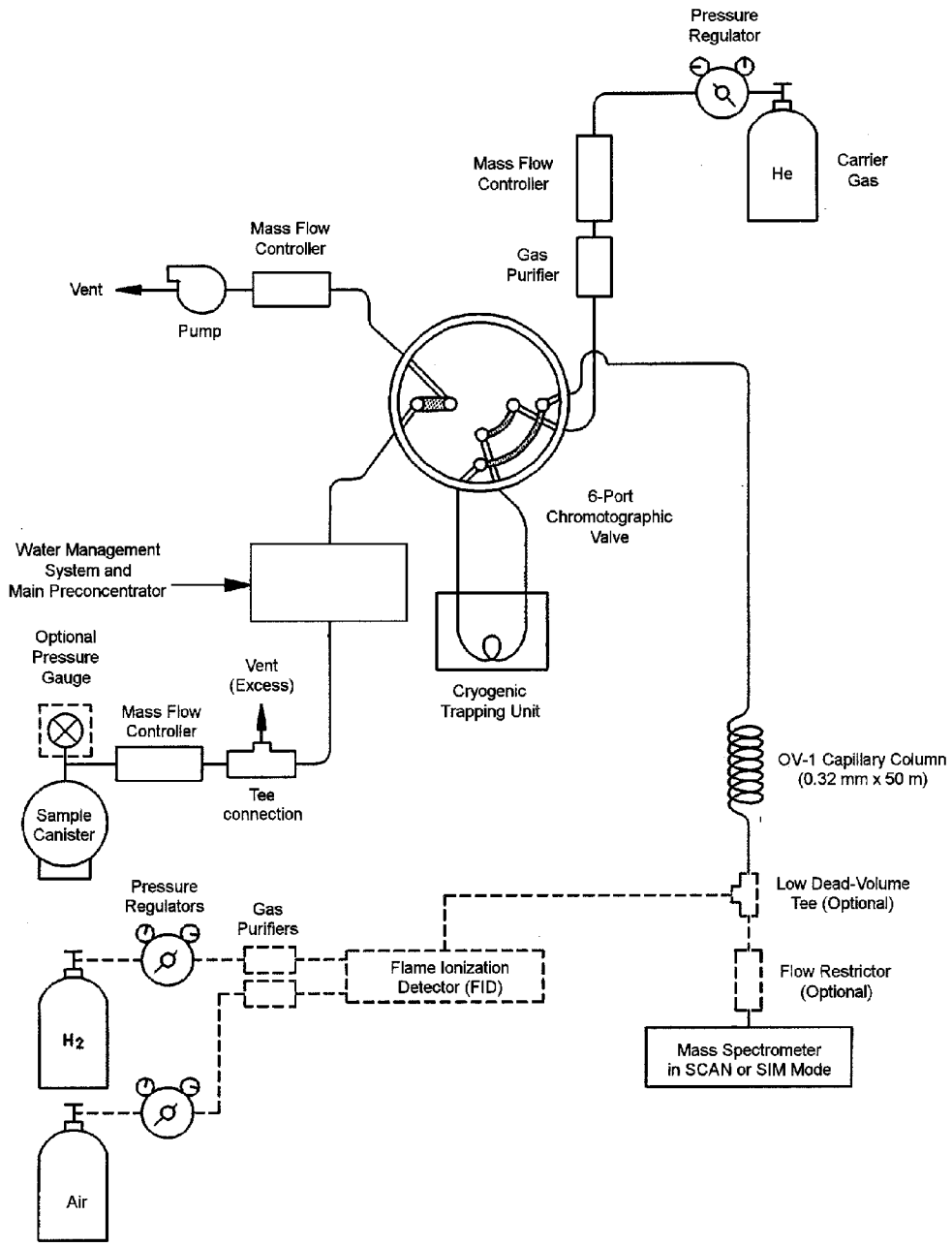

Figure 11. Canister analysis utilizing GC/MS/SCAN/SIM analytical system with optional flame ionization detector with 6-port chromatographic valve in the sample desorption mode.
[Alternative analytical system illustrated in Figure 16.]

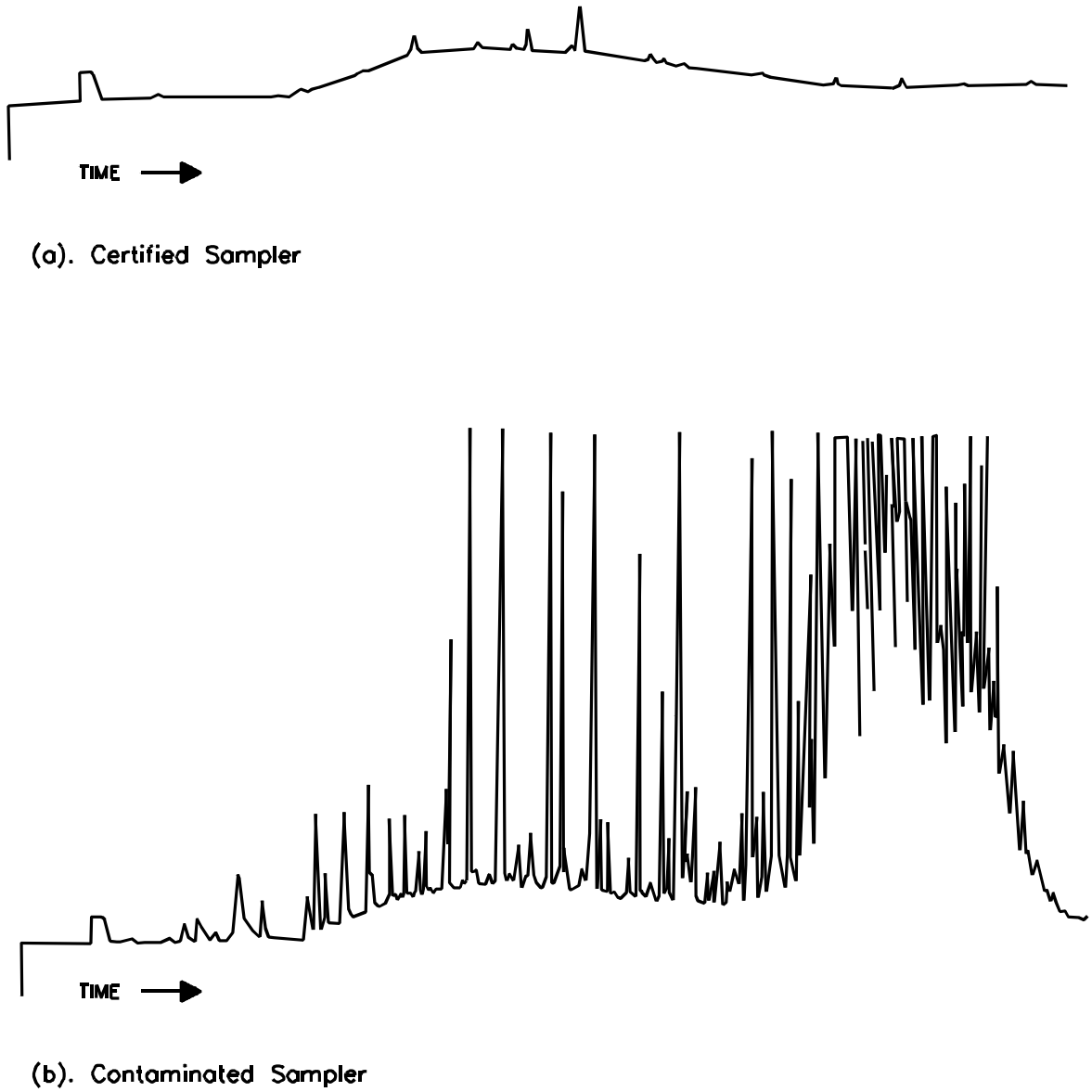

Figure 12. Example of humid zero air test results for a clean sample canister (a) and a contaminated sample canister (b).

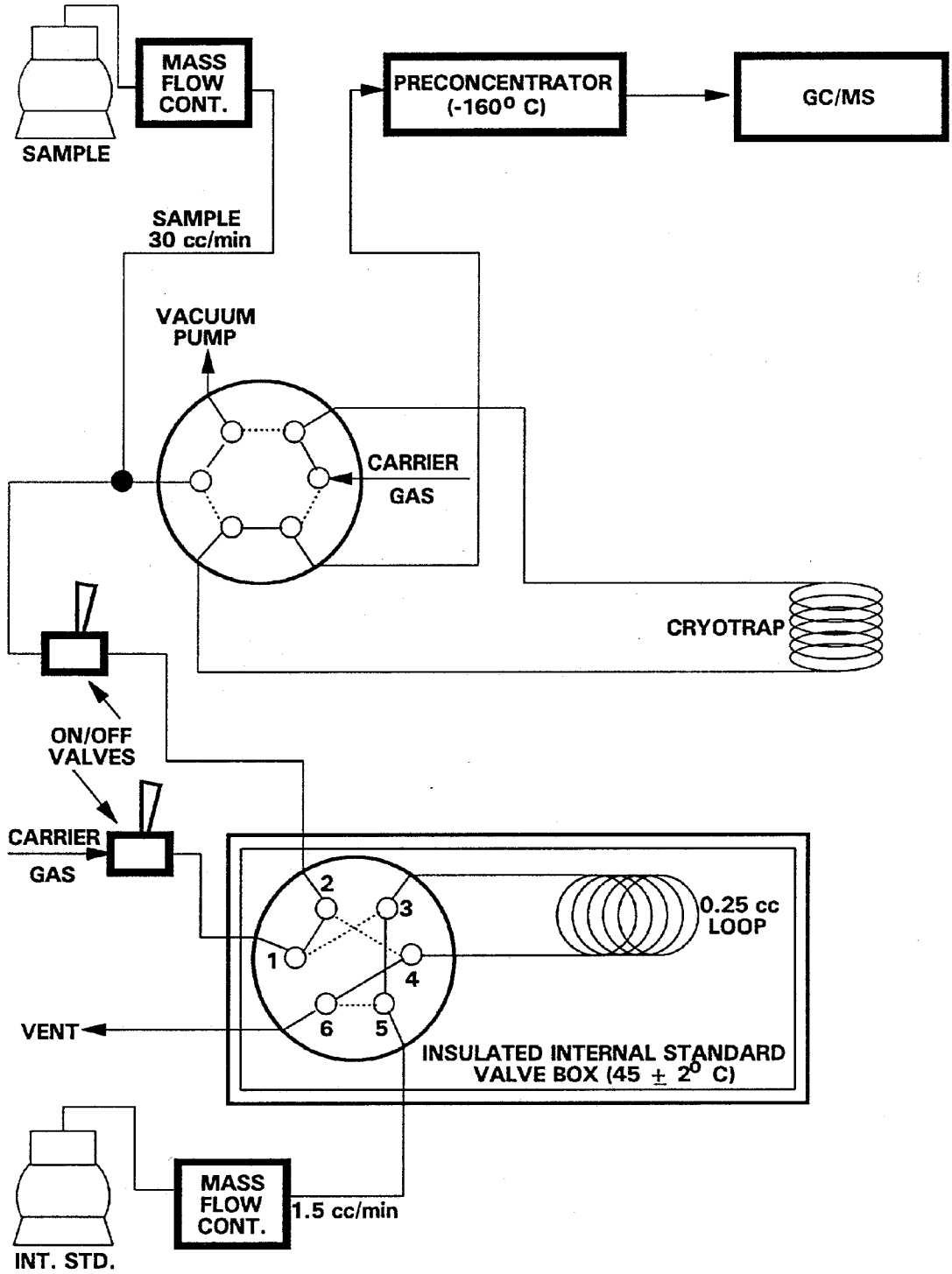

Figure 13. Diagram of design for internal standard addition.

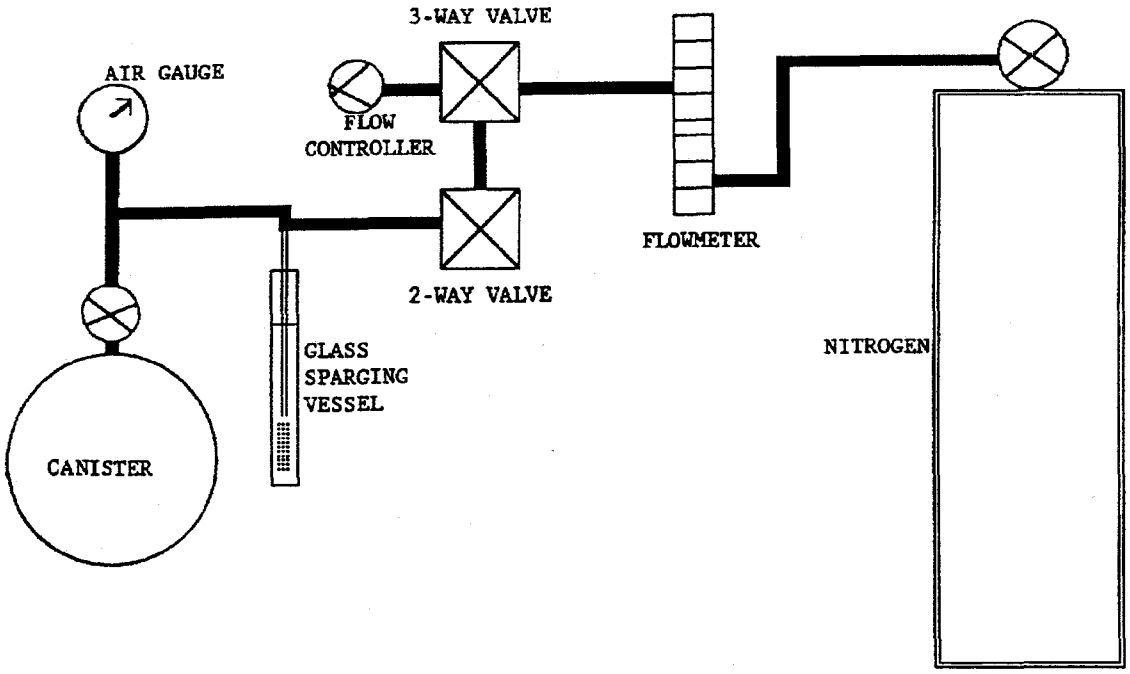

Figure 14. Water method of standard preparation in canisters.

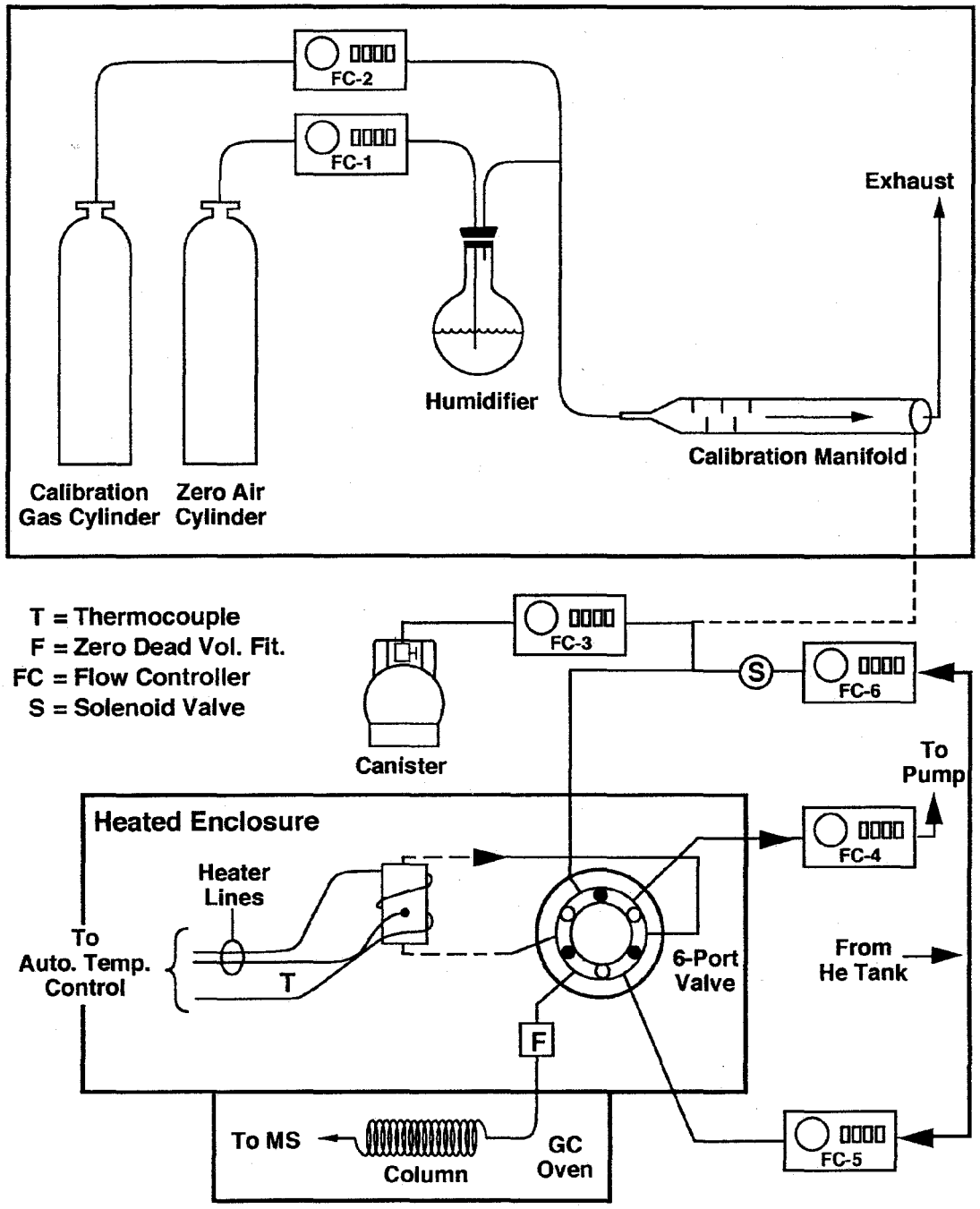

Figure 15. Diagram of the GC/MS analytical system.

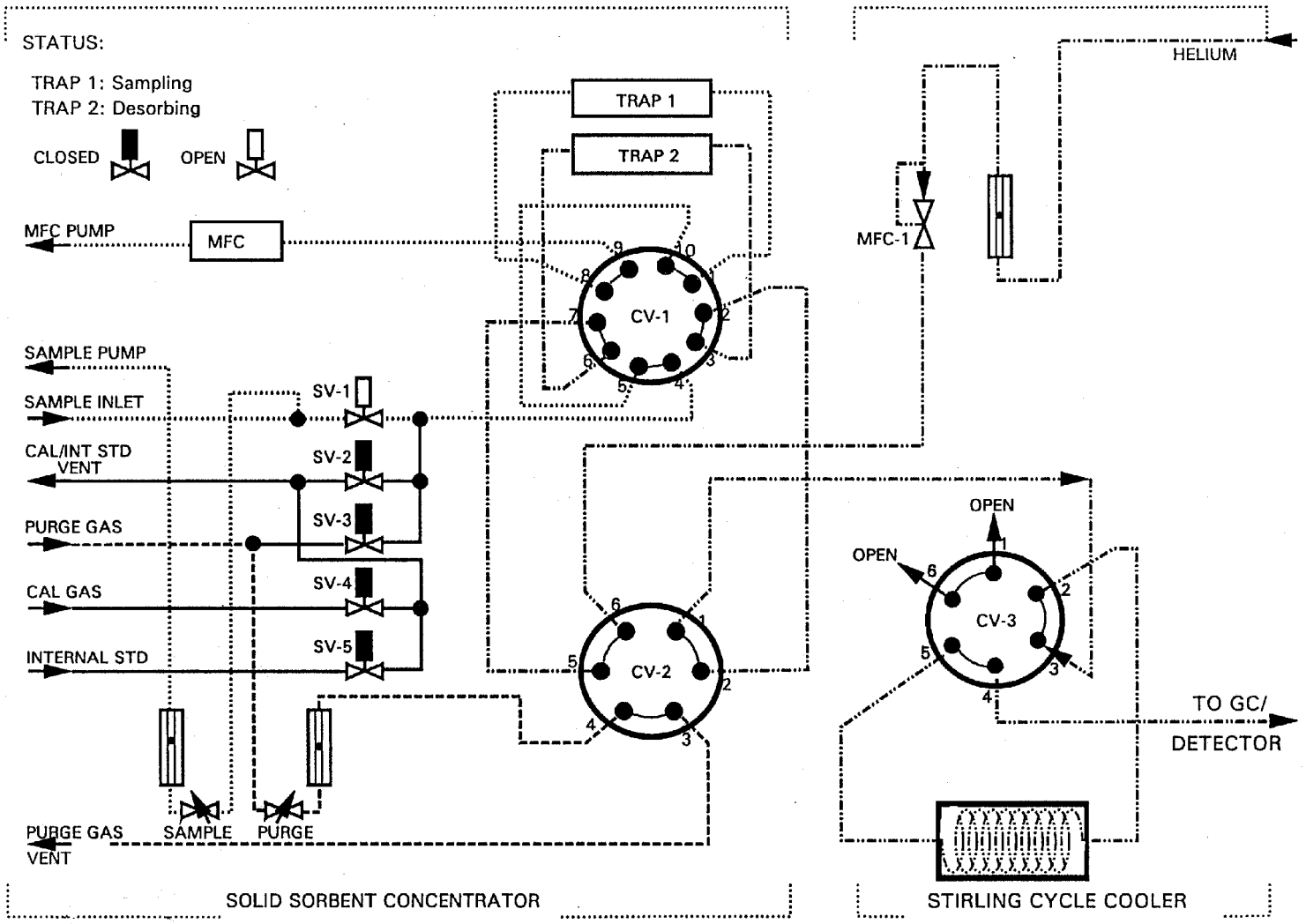

Figure 16. Sample flow diagram of a commercially available concentrator showing the combination of multisorbent tube and cooler (Trap 1 sampling; Trap 2 desorbing).

EPA/625/R-96/010b

Compendium of Methods for the Determination of Toxic Organic Compounds in Ambient Air

Second Edition

Compendium Method TO-16

Long-Path Open-Path Fourier Transform Infrared Monitoring Of Atmospheric Gases

Center for Environmental Research Information
Office of Research and Development
U.S. Environmental Protection Agency
Cincinnati, OH 45268

January 1999

Method TO-16
Acknowledgements

This Method was prepared for publication in the *Compendium of Methods for the Determination of Toxic Organic Compounds in Ambient Air, Second Edition,* (EPA/625/R-96/010b), which was prepared under Contract No. 68-C3-0315, WA No. 3-10, by Midwest Research Institute (MRI), as a subcontractor to Eastern Research Group, Inc. (ERG), and under the sponsorship of the U.S. Environmental Protection Agency (EPA). Justice A. Manning, John Burckle, and Scott Hedges, Center for Environmental Research Information (CERI), and Frank F. McElroy, National Exposure Research Laboratory (NERL), all in the EPA Office of Research and Development, were responsible for overseeing the preparation of this method. Additional support was provided by other members of the Compendia Workgroup, which include:

- John Burckle, U.S. EPA, ORD, Cincinnati, OH
- James L. Cheney, Corps of Engineers, Omaha, NB
- Michael Davis, U.S. EPA, Region 7, KC, KS
- Joseph B. Elkins Jr., U.S. EPA, OAQPS, RTP, NC
- Robert G. Lewis, U.S. EPA, NERL, RTP, NC
- Justice A. Manning, U.S. EPA, ORD, Cincinnati, OH
- William A. McClenny, U.S. EPA, NERL, RTP, NC
- Frank F. McElroy, U.S. EPA, NERL, RTP, NC
- Heidi Schultz, ERG, Lexington, MA
- William T. "Jerry" Winberry, Jr., EnviroTech Solutions, Cary, NC

This Method is the result of the efforts of many individuals. Gratitude goes to each person involved in the preparation and review of this methodology.

Author(s)

- George M. Russwurm, ManTech Environmental Technology, Inc., Research Triangle Park, NC

Peer Reviewers

- Robert L. Spellicy, Radian International, Austin, TX
- William F. Herget, Radian International, Austin, TX
- Judith O. Zwicker, Remote Sensing Air Inc., St. Louis, MO
- William W. Vaughn, Remote Sensing Air Inc., St. Louis, MO
- Robert J. Kricks, RJK Consultant, Cranford, NJ
- Robert H. Kagaan, AIL Systems Inc., Deer Park, NY
- J.D. Tate, Dow Chemical, Freeport, TX
- Lauren Drees, U.S. EPA, NRMRL, Cincinnati, OH

Finally, recognition is given to Frances Beyer, Lynn Kaufman, Debbie Bond, Cathy Whitaker, and Kathy Johnson of Midwest Research Institute's Administrative Services staff whose dedication and persistence during the development of this manuscript has enabled it's production.

D I S C L A I M E R

This Compendium has been subjected to the Agency's peer and administrative review, and it has been approved for publication as an EPA document. Mention of trade names or commercial products does not constitute endorsement or recommendation for use.

METHOD TO-16

Long-Path Open-Path Fourier Transform Infrared Monitoring Of Atmospheric Gases

TABLE OF CONTENTS

		Page
1.	Scope	16-1
2.	Summary of Method	16-2
3.	Significance	16-3
4.	Applicable Documents	16-4
	4.1 ASTM Standards	16-4
	4.2 EPA Documents	16-4
5.	Definitions	16-4
6.	Apparatus and System Requirements	16-7
	6.1 Summary	16-7
	6.2 FT-IR Sensor Requirements	16-7
	6.3 Computer Requirements	16-8
	6.4 Software Requirements	16-8
7.	Materials and Supplies	16-8
8.	Standard Procedures for Processing of Infrared Spectra	16-9
	8.1 Summary	16-9
	8.2 Suggested Order of Generation of FT-IR Concentration Data	16-9
	8.3 Selection of Wave Number Regions for Analysis in the Presence of Interfering Species	16-10
	8.4 Generation of a Background Spectrum	16-12
	8.5 Production of a Water Vapor Reference Spectrum	16-14
	8.6 Subtraction of Stray Light or Black Body Radiation	16-16
	8.7 Generation of an Absorbance Spectrum	16-18
	8.8 Correction for Spectral Shifts	16-18
	8.9 Analysis of the Field Spectra for Concentration	16-20
	8.10 Post-Analysis Review of the Data	16-21
9.	Quality Assurance	16-22
	9.1 Summary	16-22
	9.2 The Determination of Method Noise or Method Noise Equivalent Absorption	16-22
	9.3 The Measurement of the Return Beam Intensity	16-23
	9.4 The Measurement of Stray Light	16-25
	9.5 The Measurement of Black Body Radiation	16-26
	9.6 The Determination of the Detection Limit	16-27
	9.7 The Determination of Precision	16-28

TABLE OF CONTENTS (continued)

Page

9.8 The Determination of Accuracy 16-29
9.9 The Measurement of Resolution 16-31
9.10 The Determination of Nonlinear Instrument Response 16-32
9.11 The Determination of Water Vapor Concentration 16-34

10. References 16-35

METHOD TO-16

Long-Path Open-Path Fourier Transform Infrared Monitoring Of Atmospheric Gases

1. Scope

1.1 Fourier transform infrared (FT-IR) spectroscopy used for open-path monitoring of atmospheric gases is undergoing a vigorous development and growth period. Until now the developmental effort and the most of the data acquisition have been performed by highly trained individuals experienced in the fields of instrument development and spectroscopy. In the future, operators trained at the technician level will be required to perform the operation routinely. This method is intended to address that need. Specifically, the method is intended to allow trained technicians to acquire data in a standardized way and to process that data to obtain atmospheric gas concentrations. The primary intent is that the results will be obtained in a consistent fashion.

1.2 This method is intended for the use of an FT-IR system that acquires data using a long, open air path and does not require the acquisition of a sample for subsequent analysis. The system produces data that is a time sequence of the path-averaged atmospheric concentrations of various gases. Because the FT-IR can potentially measure the concentration of a large number of atmospheric gases, this method does not address the requirements for measuring a particular gas or a set of gases. Rather, it is intended to be a generalized method.

1.3 The method is intended to be instrument independent in that it discusses the processing of spectra so that gas concentrations can be obtained. The primary geometric configurations of FT-IR instruments that are commercially available are the monostatic configuration and the bistatic configuration. These configurations are shown schematically in Figures 1 and 2. This method can be used to process data from either of these types. It is assumed that the FT-IR is under computer control and that the controlling software will allow the manipulation of the spectra. This method is specifically designed to process spectra that will be analyzed by the commonly called classical least-squares technique. If the classical least-squares technique is to be used, the spectra must be processed in a specific way, and this document describes the steps of that processing. Although there are other ways to analyze the spectra, such as partial least squares, iterative least squares, spectral subtraction, principal component analysis, and peak height and peak area calculations, the use of these techniques requires that the spectra be processed in a different way than is described here. While some of the procedures given here are applicable to the other analysis techniques, this method addresses only the classical least-squares technique.

1.4 The method is not intended as a tutorial for the use of the computer software or the instruments themselves. Inclusion of this type of explanation would make this document excessively long. When certain features from the software packages are called for, it is assumed that the user has read or can read the appropriate description in the specific manual. As far as the instruments are concerned, it is assumed that the operator has participated in instrument training provided by the specific instrument manufacturer and that this training has been sufficient to enable the operator to produce spectra and to save them on a disk.

1.5 Since this method in this document is considered to be a set of operational procedures, the document does not contain an in-depth explanation about the origin or the rationale for the inclusion of particular steps. For a more complete and rigorous discussion of the FT-IR technique, the user of this method is referred to EPA's *FT-IR Open-Path Monitoring Guidance Document* (1).

1.6 The intent of this document is to provide the operator with stepwise procedures producing concentration data from spectra taken with an FT-IR. To accomplish this, items such as background spectra, water vapor reference

spectra, and stray light are discussed. In keeping with the concept of a procedure, these quantities must be specified directly. However, the entire area of FT-IR remote sensing of the atmosphere is undergoing rapid change, and parts of these procedures will without doubt need revision in the future. Throughout this document the user must keep in mind that for each procedure in the TO-16 method there may be other equally valid procedures that are currently being used that are not described here.

1.7 Finally, a statement about computer automation of these procedures is in order here. The method does not address the problem of automation directly and implies that an operator is available to perform the individual steps. Some operational software packages already exist that incorporate many of these routines in an automatic way. It is felt that each procedure potentially can be automated, but the steps listed here are those that need to be incorporated in any automated procedure.

2. Summary of Method

2.1 For the purpose of this document the operation of an FT-IR remote sensor is divided into two parts. The first is initial data acquisition after the system has been set up by the manufacturer and the second is what is considered to be routine data acquisition. The first of these data acquisition periods is intended to produce data that will form the basis of a quality assurance data set. The second is devoted to the production of time sequences of atmospheric gas concentration data.

2.2 There are several items that need to be determined before the FT-IR system can be put into routine service. These items have been selected to determine how the system is functioning initially and include the shortest path length that will saturate the detector, the ambient black body radiation level for the bistatic configuration, the stray light inside the instrument for the monostatic configuration, and the return intensity as a function of distance. Beyond these steps there is a survey set of data that should be acquired. Data from this survey set will form the basis of the routinely monitored quality control checks for the instrument.

2.3 In addition to the FT-IR data it is required that the ambient temperature and the relative humidity be monitored on a continuous basis so that the water vapor concentration as a function of time can be determined. It is to be clearly understood that relative humidity measurements alone are not relevant to this operation but the amount of water is. These data should be acquired at the site where the FT-IR data is taken. Use of data taken at airports miles away is not appropriate.

2.4 The initial step in the procedure for determining the concentration data for various gases is the production of a set of interferograms, and it should be the interferograms that are saved as the primary data. The various procedures given in Section 8 of this document use the single beam spectrum that is created from the interferogram. A single beam spectrum taken with a monostatic system over a 414-m path length is illustrated in Figure 3. Various atmospheric constituents as well as a stray light component are pointed out. However, it is the interferograms that are considered the most important data. If they are not saved they cannot accurately be reproduced by simply performing the inverse Fourier transform. Once a set of target gases has been selected, the wave number regions to be used in the analysis are chosen. For the monostatic instrument geometry, the stray light component must next be subtracted from each single beam spectrum. For the bistatic case, the black body radiation spectrum must be subtracted from each single beam spectrum. One spectrum from this set is then chosen to be the background, or I_0, spectrum, and this can be turned into a synthetic background spectrum. A second spectrum is then used to create a water vapor reference spectrum, and all the remaining spectra are then

converted to absorbance spectra. All the spectra to be analyzed are then checked for wave number shifts. Finally, the absorbance spectra are analyzed by the classical least-squares technique.

2.5 It is suggested that, if possible, twice each day a short cell filled with a known quantity of gas should be inserted in the infrared beam, and four spectra should then be recorded. The instrument must be operating in exactly the same manner as it is when it is routinely acquiring data but this time with the cell. These spectra are analyzed in the same way as all other spectra, but for the particular gas in the cell. This data is then added to the appropriate control charts. No exact procedure for using this cell and no specifications for the cell are provided at this time within this document. Not all the instruments that are commercially available can accommodate a cell, and many gases cannot be easily used in such a cell.

2.6 A subset of each day's spectra is then selected and the following two items are determined: the root mean square (RMS) noise in three wave number regions and the return beam intensity at two wave numbers. The range of water vapor concentrations over the time period during which the subset of data was taken is calculated. These data are also then added to the appropriate control charts.

2.7 The remainder of the data can then be checked as described in Section 8 and then against the data quality objectives provided by the monitoring program.

3. Significance

3.1 VOCs enter the atmosphere from a variety of sources, including petroleum refineries, synthetic organic chemical plants, natural gas processing plants, and automobile exhaust. Many of these VOCs are acutely toxic; therefore, their determination in ambient air is necessary to assess human health impacts.

3.2 The environmental impacts from the release of airborne VOCs is a topic of great interest among air pollution scientists. It is important that measurement methods be developed to accurately assess the impact of airborne chemical emissions on the environment. Until now, traditional air sampling/analytical techniques (i.e., solid adsorbents, treated canisters, portable gas chromatographs, etc.) have been used to characterize emission impacts of airborne toxic chemicals in the environment.

3.3 The method of trace gas monitoring using FT-IR-based, long-path, open-path systems has a number of advantages that are significant over traditional methods. Some of these advantages are related to the path monitoring aspect of this method which, by its very nature, distinguishes the method from all point monitoring methods. The main advantages of these systems are the following:

- Integrity of the sample is assured since no sampling actually occurs.
- Multi-gas analysis is possible with a single field spectrum.
- Path-integrated pollutant concentrations are obtained.
- Spatial survey monitoring of industrial facilities is possible if scanning optics are used.
- Coadding of spectra to improve detection capabilities is easily performed.

- Rapid temporal scanning of line-of-sight or multiple lines-of-sight is possible.

- Monitoring of otherwise inaccessible areas is possible.

3.4 Applications include the monitoring of atmospheric gases along the perimeters of industrial facilities or, from an elevated, centrally located platform, monitoring over the industrial facility to infrared sources or retroreflectors placed along the facility edge. Other applications include monitoring (1) at hazardous waste sites during remediation or removal operations to provide warnings of high concentrations and to verify that back-to-work conditions have been achieved; (2) in response to accidental chemical spills or releases; (3) in workplace environments to develop concentration profiles at the worker level; and (4) in the ambient air for some compounds. It is theoretically applicable to the measurement of all gaseous compounds that exhibit absorption spectra in the mid-infrared region of the electromagnetic spectrum.

3.5 Significant advances have been made in recent years to develop the FT-IR systems into practical remote sensing tools, particularly in the understanding of the importance of water vapor interference associated with FT-IR methodology. As indicated in this method, the generation of a background spectrum for a given measurement and the generation of water vapor spectra to account to water vapor interference in mid-infrared measurements are features of the FT-IR measurement technique that deserve more attention. The significance of Compendium Method TO-16 is that it is the first such method to address all the features that are required to make a field measurement using FT-IR-based systems. As such, it provides a guide to field measurement as well as a basis for improvement and further consideration.

3.6 The ultimate significance of remote sensing with FT-IR systems is a matter of cost effectiveness and of technological advances. Technological advances are required in at least two important areas: (1) the improvement in the characteristics of the instrumentation itself and (2) the development of "intelligent" software. The software is required to improve the means for short-term adjustment of background and water vapor spectra to account for the continual variation of ambient conditions that can adversely affect the accuracy and precision of FT-IR based systems.

4. Applicable Documents

4.1 ASTM Standards

- Method D1356 *Definition of Terms Relating to Atmospheric Sampling and Analysis*.

4.2 EPA Documents

- *Technical Assistance Document for Sampling and Analysis of Toxic Organic Compounds in Ambient Air*, U. S. Environmental Protection Agency, EPA-600/4-83-027, June 1983.
- *Quality Assurance Handbook for Air Pollution Measurement Systems*, U. S. Environmental Protection Agency, EPA-600/R-94-038b, May 1994.
- *Open-Path Monitoring Guidance Document*, U. S. Environmental Protection Agency, EPA 600/4-96-040, April 1996.

5. Definitions

*[**Note**: This section contains a portion of the glossary of terms from the guidance document (1) for remote sensing that is applicable to Compendium Method TO-16. When possible, definitions of terms have been drawn from authoritative texts or manuscripts in the fields of remote sensing, air pollution monitoring, spectroscopy, optics, and analytical chemistry. In some cases, general definitions have been augmented or streamlined to be more specific to long-path, open-path monitoring applications and to Compendium Method TO-16. These definitions were intended to remain scientifically rigorous and still be generally applicable to the variety of FT-IR open-path remote-sensing issues that must be addressed by the operator.]*

5.1 Absorbance—the negative logarithm of the transmission. $A = -\ln(I/I_0)$, where I is the transmitted intensity of the light and I_0 is the incident intensity. Generally, the logarithm to the base 10 is used, although the quantity I really diminishes exponentially with A.

5.2 Apodization—a mathematical transformation carried out on data received from an interferometer to alter the instrument's response function. There are various types of transformation; the most common are boxcar, triangular, Happ-Genzel, and Beer-Norton functions.

5.3 Background Spectrum—1. With all other conditions being equal, that spectrum taken in the absence of the particular absorbing species of interest. 2. Strictly, that radiant intensity incident on the front plane of the absorbing medium. 3. A spectrum obtained from the ambient black body radiation entering the system. This background must be considered in FT-IR systems, in which the IR beam is not modulated before it is transmitted along the path. For FT-IR systems that do not use a separate source of infrared energy, the background is the source of infrared energy.

5.4 Beer's Law—Beer's law states that the intensity of a monochromatic plane wave incident on an absorbing medium of constant thickness diminishes exponentially with the number of absorbers in the beam. Strictly speaking, Beer's law holds only if the following conditions are met: perfectly monochromatic radiation, no scattering, a beam that is strictly collimated, negligible pressure-broadening effects (2,3).

5.5 Bistatic System—a system in which the receiver is some distance from the transmitter. This term is actually taken from the field of radar technology. For remote sensing, this implies that the light source and the detector are separated and are at the ends of the monitoring path.

5.6 Fourier Transform—a mathematical transform that allows an aperiodic function to be expressed as an integral sum over a continuous range of frequencies (4). The Fourier transform of the interferogram produced by the Michelson interferometer in an FT-IR is the intensity as a function of frequency.

5.7 FT-IR—an abbreviation for "Fourier transform infrared." A spectroscopic instrument using the infrared portion of the electromagnetic spectrum. The working component of this system is a Michelson interferometer. To obtain the absorption spectrum as a function of frequency, a Fourier transform of the output of the interferometer must be performed. A brief overview of the FT-IR is provided in *FT-IR Theory* (5). An in-depth description of the FT-IR can be found in *Fourier Transform Infrared Spectrometry* (6).

5.8 Intensity—the radiant power per unit solid angle. When the term "spectral intensity" is used, the units are watts per steradian per nanometer. In most spectroscopic literature, the term "intensity" is used to describe the power in a collimated beam of light in terms of power per unit area per unit wavelength.

5.9 Interference—the physical effects of superimposing two or more light waves. The principle of superposition states that the total amplitude of the electromagnetic disturbance at a point is the vector sum of the individual electromagnetic components incident there. For a two-component system of collinear beams of the same amplitude, the mathematical description of the result of addition is given by $I(p) = 2I_0(1 + \cos[A])$, where I_0 is the intensity of either beam, and A is the phase difference of the two components. The cosine term is called the "interference term" (7,8). See also "Spectral Interference."

5.10 Interferogram—the effects of interference that are detected and recorded by an interferometer; the output of an FT-IR and the primary data that is collected and stored (6,8).

5.11 Interferometer—any of several kinds of instruments used to produce interference effects. The Michelson interferometer used in FT-IR instruments is the most famous of a class of interferometers that produce interference by the division of an amplitude (9).

5.12 Light—strictly, light is defined as that portion of the electromagnetic spectrum that causes the sensation of vision. It extends from about 25,000 cm^{-1} to about 14,300 cm^{-1} (4).

5.13 Minimum Detection Limit—the minimum concentration of a compound that can be detected by an instrument with a given statistical probability. Usually the detection limit is given as 3 times the standard deviation of the noise in the system. In this case, the minimum concentration can be detected with a probability of 99.7% (10,11).

5.14 Monitoring path—the actual path in space over which the pollutant concentration is measured and averaged.

5.15 Monostatic System—a system with the source and the receiver at the same end of the path. For FT-IR systems, the beam is generally returned by a retroreflector.

5.16 Reference Spectra—spectra of the absorbance versus wave number for a pure sample of a set of gases. The spectra are obtained under controlled conditions of pressure and temperature and with known concentrations. For most instruments, the pure sample is pressure-broadened with nitrogen so that the spectra are representative of atmospherically broadened lines. These spectra are used for obtaining the unknown concentrations of gases in ambient air samples.

5.17 Relative Absorption Strength—a term used exclusively in Compendium Method TO-16 to describe the relation of absorption due to interfering species to the absorption of the target gas.

5.18 Resolution—the minimum separation that two spectral features can have and still, in some manner, be distinguished from one another. A commonly used requirement for two spectral features to be considered just resolved is the Raleigh criterion. This states that two features are just resolved when the maximum intensity of one falls at the first minimum of the other (5,6). This definition of resolution and the Raleigh criterion are also valid for the FT-IR, although there is another definition in common use for this technique. This definition states

that the minimum separation in wave numbers of two spectral features that can be resolved is the reciprocal of the maximum optical path difference (in centimeters) of the two interferometer mirrors employed.

5.19 Retroreflector—the CIE (Commission Internationale de l'Eclairage) defines retroreflection as "radiation returned in directions close to the direction from which it came, this property being maintained over wide variations of the direction of the incident radiation." Retroreflector devices come in a variety of forms and have many uses. The one commonly described by workers in remote sensing uses total internal reflection from three mutually perpendicular surfaces. This kind of retroreflector is usually called a corner cube or prismatic retroreflector (12).

5.20 RMS Noise—this quantity is actually the statistical quantity rms deviation. In Compendium Method TO-16 the rms noise (deviation) is calculated by using a least squares fit to the baseline. Because of this calculation, the rms noise in Compendium Method TO-16 uses the quantity N-2 in the denominator rather than N-1 as normally described.

5.21 Single Beam Spectrum—that spectrum which results from performing the Fourier transform on the interferogram. It is not a transmission spectrum. The term “single beam” is a holdover from older instruments that were double beam instruments.

5.22 Source—the device that supplies the electromagnetic energy for the various instruments used to measure atmospheric gases. These generally are a Nernst glower or globar for the infrared region or a xenon arc lamp for the ultraviolet region.

5.23 Spectral Intensity—see Section 5.8.

5.24 Spectral Interference—when the absorbance features from two or more gases cover the same wave number regions, the gases are said to exhibit spectral interference. Water vapor produces the strongest spectral interference for infrared spectroscopic instruments that take atmospheric data.

5.25 Synthetic Background—a spectrum that is made from a field spectrum by choosing points along the baseline and connecting them with a high-order polynomial or short, straight lines. The synthetic background is then used to find the absorbance spectrum.

5.26 Wave Number—the number of waves per centimeter. This term has units of reciprocal centimeters (cm^{-1}).

6. Apparatus and System Requirements

6.1 Summary

6.1.1 Compendium Method TO-16 is a procedure that deals with how spectra taken with an FT-IR are to be processed in order to obtain various atmospheric gas concentrations. General requirements for FT-IR instrumentation is being prepared by a committee of L'Organisation Internationale de Metrologie Legale (OIML) and will be available in the very near future.

6.1.2 The instrument requirements listed here are limited to those that will define a rudimentary but operational system. The requirements are delineated into three categories: those of the FT-IR sensor itself (see

Section 6.2), the computer associated with it (see Section 6.3), and the software that allows for data analysis (see Section 6.4).

6.2 FT-IR Sensor Requirements

6.2.1 The system should be capable of making spectral absorption measurements along an open air optical path.

6.2.2 The system can be either of the monostatic or the bistatic geometry.

6.2.3 The system must be able to produce and save an interferogram and a single beam spectrum.

6.2.4 The system must be able to operate with a resolution of at least 1 cm^{-1} over the mid-infrared region (700–4200 cm^{-1}).

6.2.5 The system must be capable of acquiring data by co-adding individual interferogram scans in one-scan increments. As a minimum, the system must be able to acquire data from a one-scan interferogram to an interferogram made up of sufficient co-added scans so that at least 5-min concentration averages can be obtained.

6.2.6 The system must be able to perform the mathematical procedure of Fourier transformation on the interferogram, thereby producing a so-called single beam spectrum. The transform can be performed as part of post-acquisition processing or in quasi-real time. If performed in quasi-real time the process of transformation should not add significantly to the data acquisition time.

6.2.7 Although there is no agreed upon procedure for the use of a gas cell with these systems, the system may have provisions for installing an ancillary gas cell in the optical beam. If that is the case, the installation must allow for the entire beam to pass through the cell. The cell can be of any of several designs: short, either single or double pass; multi-pass capable of producing a relatively long optical path; or a multi-chambered cell with the individual chambers interconnected and in parallel with one another.

6.3 Computer Requirements

6.3.1 The computer must be capable of acquiring data in the form of interferograms with sufficient speed so that the system is able to operate in quasi-real time.

6.3.2 The computer must have provisions for storing of the data acquired in one 24-h period. The storage must accommodate the interferograms.

6.3.3 The computer must have sufficient RAM to operate the controlling software and the data manipulation software.

6.4 Software Requirements

6.4.1 The software must have provisions for manipulating the spectra so that all the individual procedures listed here can be accomplished.

6.4.2 The software must be able to perform the analysis for concentration using classical least squares.

7. Materials and Supplies

7.1 Only a small number of materials are required in addition to the basic instrument for this method. However, the basic instrument operation may have specific material requirements such as liquid nitrogen or nitrogen, etc. A listing of any specific instrument's requirement for material must be obtained from the manufacturer.

7.2 A set of gases may have to be purchased in order to acquire spectra with a cell. This set of gases is intended to allow the operator to determine the precision and accuracy of the data obtained from the field spectra, but at the present time no procedure using a cell has been developed. The specific gases required are dependent on the particular monitoring program. If necessary, the gases can be purchased as pure gases, which are then diluted with nitrogen for use, or they can be a mixture of gases that are properly mixed at purchase. The dilution step can be quite cumbersome and it is recommended that appropriate mixtures of gas be acquired directly whenever possible. The required concentrations of the gases are dependent on the anticipated concentration of the target gas in the atmosphere and the ratio of the actual path length used to the length of the cell. Many applications will require that these gases be purchased with certifications traceable to the National Institute of Standards and Technology.

7.3 The only other material that may be required is a set of screens of varying mesh that will be used when determining whether the system is responding linearly. This screening can be regular aluminum window screen or made of other opaque metallic materials. The size of the mesh is not really important, but the screen should be large enough to cover the entire beam. The mesh itself should be chosen so as to change the transmitted intensity by an easily measured amount (on the order of 25% or more). The screen must not be made of any plastic materials as they transmit infrared energy. This in itself is not a problem but the plastic materials introduce absorbance at specific wave numbers and may not provide the desired result.

8. Standard Procedures for Processing of Infrared Spectra

8.1 Summary

The specific procedures that are required to produce atmospheric gas concentration data are included in this section. They start with the general operations procedure that describes how the other individual procedures should follow one another.

8.2 Suggested Order of Generation of FT-IR Concentration Data

8.2.1 This section provides the FT-IR operator with a systematic approach to the generation of FT-IR concentration data. These procedures are recommended for operators with little experience with FT-IR operation. As the operator gains more experience with the production of FT-IR concentration data, he may want to reorder the sequence of events to better fit his experimental schedule.

8.2.2 Assumptions

8.2.2.1 Compendium Method TO-16, in general, does not describe the general planning that is necessary to conduct a field program. It is felt that each data acquisition program is different and all programs cannot be covered in depth with a single procedure. For example, the time for acquiring a single spectrum can vary from a single scan of a few seconds up to a half hour. The actual time required for any one program is dependent on that program and therefore is not discussed further in this procedure. Much of the planning for the acquisition of data is connected to the generation of a detailed quality assurance/quality control (QA/QC) program plan, and this method is not considered to be such a plan. Section 9 presents individual items that should be addressed as a minimal quality assurance effort. The procedures in Section 8 cover only the production of concentration data.

8.2.2.2 It is also assumed that water vapor concentration data for the data acquisition period is available. This method does not discuss how to acquire that data, however. The water vapor concentration data is used for post-analysis review and for some of the QA/QC checks.

8.2.2.3 From this point on, it is assumed that the individual spectra have already been acquired. It is assumed that the interferograms have been converted to single beam spectra. It is further assumed that no other data manipulation has occurred.

8.2.3 The suggested order for the production of concentration data utilizing FT-IR is given below.

- Selection of wave number regions for analysis in the presence of interfering species (see Section 8.3).
- Generation of a background spectrum (see Section 8.4).
- Production of a water vapor reference spectrum (see Section 8.5).
- Subtraction of stray light or black body radiation (see Section 8.6).
- Generation of an absorbance spectrum (see Section 8.7).
- Correction for spectral shifts (see Section 8.8).
- Analysis of field spectra for concentration (see Section 8.9).
- Post-analysis review of the data (see Section 8.10).

8.3 Selection of Wave Number Regions for Analysis in the Presence of Interfering Species

8.3.1 Purpose. This section instructs the operator on how to select the wave number regions that are to be used in the analysis of field spectra. This section includes the process of working with interfering species because the absorbance spectrum of any one particular gas frequently overlaps with the absorbance of another species. This section also provides the operator with a measure of the strength of the interference.

8.3.2 Assumptions. One of the most important requirements when utilizing classical least squares as an analysis technique is the identification of all possible compounds whose absorption spectrum can interfere with the absorption feature being analyzed. It is therefore imperative that the operator has as complete knowledge as he can of the compounds that are expected to be present during the measurement period. The assumption made here is not only that this knowledge exists but that reference spectra for all the potentially present compounds also exist. The operator should be aware that absorption spectra from unexpected chemical compounds may appear during the data acquisition phase and that these must be accounted for in the analysis for the most accurate data.

8.3.3 Additional Sections Referenced. Section 9.2 is referenced in this section.

8.3.4 Methodology. While FT-IR spectra can in fact be acquired before it is known exactly what wave number region to use for any particular gas in the analysis, this is never a good idea. If on-line analysis is a requirement then the wave number regions must be selected first.

When starting, the operator must be aware that this is likely to be an iterative procedure and some wave number regions may be rejected in the process. The selected wave number region can be quite narrow, but there are some dangers in selecting a very narrow region. It is best if the operator at first selects the entire absorbing band structure, using the end points as the 1% absorbance values relative to the peak. If narrowing the wave number region becomes necessary, the operator should be aware that the selected wave number region should always encompass the largest possible range in absorbance.

This procedure starts by an examination of the absorption spectrum of the target gas and selection of the absorption feature that has the highest absorption coefficient and is outside the strong absorption regions of water vapor and carbon dioxide. The wave number region to use is the region that is covered by the entire peak under study. It is not necessary to include any wave number region whose relative absorbance is less than 1% of the peak. The absorption coefficient is calculated and the expected absorbance is calculated by using the anticipated concentration at the site. This absorbance is compared to the noise equivalent absorbance obtained from Section 9.2. If the expected absorbance is not 3 times higher than the noise equivalent absorbance, then that wave number region should be rejected. It is likely that if the anticipated absorbance does not meet this criterion then measurement of that particular gas will have to be rejected because the remaining absorption coefficients will be too small.

If that test is passed the procedure continues. The absorption features of all the other gases known to be present at the measurement site are then compared to the target gas for possible interferences. If the total interference is thought to be too strong, the wave number region is rejected and the process is started over with a different absorption feature. If all of the features in the target gas are rejected, the gas concentration cannot be measured by FT-IR.

To calculate the absorption coefficient for any particular feature, the operator must measure the absorbance of the feature being used at the peak of the feature. This is done by using the reference spectrum. Then by using the expression $\alpha = A/cl$ the absorption coefficient α is determined. The A in this expression is the peak absorbance measured from the reference spectrum, and the cl is the concentration–path length product also obtained from the reference spectrum.

Once α is obtained, an estimate of the peak absorbance can be made as follows. Use the expression $A = \alpha cl$, where the c is the anticipated concentration at the site and l is the anticipated path length. The c and the l used here must have the same units (e.g., ppm, meters) as the reference spectra. The calculated A is then the anticipated peak absorbance at the site.

To judge whether a particular gas is a possible interfering species, a comparison of the absorption features must be made. This is initially done by simply comparing the spectra of all the other compounds known to be present at the site with the absorption feature under study. If any overlap between the two spectra exists the gas must be considered an interfering species.

To judge the strength of any interfering species the absorption coefficients of the interfering species must be calculated as above and an estimate of the anticipated absorbance at the measuring site made. In measuring the correct absorbance to use for the interfering species, the operator should use the highest absorbance of the interfering species spectrum within the overlapping wave number region. Note that the actual peak absorbance of the interfering gas may very well fall outside the overlap region. The absorption coefficient and the anticipated absorbance at the site for the interfering species is then determined exactly as described above. Then the fractional overlap of the spectra must be determined and the estimated impact on the actual measurement is made.

To determine the fractional overlap, measure the wave number region of the overlap in the spectra and then divide that by the entire wave number region selected for the target gas. The measurement should be made by using the 1% relative absorbance wave numbers of the interfering species.

To estimate the strength of the overlapping absorbing feature, multiply the fractional overlap of the interfering species by the anticipated absorbance at the site (for the interfering species). Then divide that product by the

anticipated absorbance at the site for the target gas. The total interfering strength is then the sum of all the strengths for the individual interfering species.

The classical least squares technique is a very powerful tool for analysis and can determine the presence of very small quantities of gas in the presence of a fairly large interference. While no hard rule can be given, the operator should be concerned and at least attempt to find another wave number region if the total strength of the interfering species is more than 5 times the anticipated absorption of the target gas at the site.

If the operator rejects the wave number region, then the process is repeated with the next highest absorption coefficient and so on until a suitable wave number region is found. The operator is advised to record a table of these wave number regions in a permanent notebook for the specific gases that he is working with. It is likely that these calculations will have to be done only once for any particular target gas.

8.3.5 Procedure

8.3.5.1 Examine the reference spectrum of the target gas and select the absorbance feature with the highest absorbance that is outside the strong absorbance of water and carbon dioxide.

8.3.5.2 Record the wave number region using the relative 1% absorbance peaks as the end points.

8.3.5.3 Calculate the absorption coefficient α using the peak absorbance.

8.3.5.4 Calculate the anticipated absorbance at the field site using the α from Section 8.3.5.3, the concentration anticipated at the field site, and the path length anticipated at the field site.

8.3.5.5 Compare the result of Section 8.3.5.5 with 3 times the RMS noise calculated from Section 9.2.

8.3.5.6 Compare the absorbance spectra of all the gases known to be present in the atmosphere at the site. Record any overlaps with the selected region.

8.3.5.7 Calculate the following.

8.3.5.7.1 The absorption coefficient α of the interfering species using the peak absorbance in the overlap region.

8.3.5.7.2 The fractional overlap.

8.3.5.7.3 The anticipated strength of the interfering species.

8.3.5.7.4 The sum of the interfering strengths.

8.3.5.8 Accept or reject the wave number region.

8.3.5.9 If necessary repeat Sections 8.3.5.1 through 8.3.5.8 with the next highest absorbance peak.

8.4 Generation of a Background Spectrum

8.4.1 Purpose

8.4.1.1 This section instructs the operator on how to generate a background spectrum that can then be used as I_0 in Beer's law. A background spectrum can be generated by several methods. These methods are (a) the upwind background, (b) the cross-path background, (c) the zero target gas background, and (d) the synthetic background. The first three backgrounds are generally used with no further processing, but the synthetic background has to be made. Each is briefly discussed below.

8.4.1.2 Since the synthetic background is the only one that requires computer processing, it is the one for which the actual steps are given in this procedure.

8.4.2 Assumptions

8.4.2.1 The wave number regions for the analysis have previously been chosen.

8.4.2.2 Field spectra have been acquired, and one of them is to be used for a synthetic background.

8.4.2.3 Software is available that allows a synthetic background to be made.

8.4.3 Additional Sections Referenced. No other sections are referenced.

8.4.4 Methodology. In the derivation of Beer's law, one calculates how much the intensity of the infrared source diminishes as the energy traverses an absorbing medium. To calculate the concentration of the gas, the operator must compare the initial intensity obtained in the absence of the target gas with the measured intensity obtained when the target gas is present. This initial intensity is called the background, and it is the response of the instrument to the infrared source in the absence of any absorbance due to the target gas. A variety of phenomena are responsible for the shape of the background curve. A number of these phenomena are related to the instrument, but the predominant atmospheric process that shapes the background is the absorbance due to water vapor.

If any absorbance due to the target gas remains in the background, the absolute values of the gas concentration cannot be measured. In this case, only values relative to the concentration in the background will be obtained.

The upwind background is one that is predominantly used at smaller sites, where it is fairly simple to move the system from one side to another. Once the wind direction is known, the system is set up so that the path is along the upwind side and a spectrum that is to be used as a background is acquired. This procedure is normally done twice a day (morning and evening), and these spectra are generally used as backgrounds with no further processing.

The argument is made that an upwind background will contain only target gas concentrations from upwind sources. The remaining downwind field spectra will then give correct values from gases at the site alone. While this is a valid argument, it is not a very strong argument for the use of an upwind spectrum, and any variability in the upwind sources may erroneously be interpreted as variability of the target gas concentration at the site itself. Also to be noted when using such a spectrum is that it may not be valid for the entire time period the operator intends. As the water vapor concentration changes, the curvature of the baseline in the spectra changes also. This will give rise to high error bars (as calculated from classical least squares) and to variability in the target gas concentration that follows that of water. When that occurs, this background (or any background) may no longer be valid.

The cross-path background is taken with an optical path placed along one side of the site and with the wind velocity parallel to it. This background is generally used when the geometry of the site allows it, and it supposedly has no target gas concentration. This type of background may also pose some unwanted problems. If the wind is very light, then the gases from the site can indeed diffuse into the optical path. Target gas concentrations from elsewhere may be present, and interpretation may present the same problems described above.

Some researchers have obtained a background spectrum by simply waiting long enough for the gas concentration to go to zero. This method will not work for gases that are always present in the atmosphere, such as methane or carbon monoxide. This procedure may be used if there is sufficient time in the program for the waiting period and if real-time analysis is not an immediate requirement, but it is not clear whether the water vapor concentration will be in a satisfactory range. Also, the operator should not expect any one background to remain valid for more than a few days, and then a new background must be obtained.

If the measurement program merely requires a "yes" or "no" response to the question of whether a compound is present, then any spectrum that is taken may possibly be used for a background. If possible, the operator should use a spectrum that has a minimum of the target gas, but that is not necessary if the analysis software allows negative numbers. (Note that it is the difference of the concentration in the two spectra that will be measured.)

If, however, the absolute values of the concentration of the target gas in the optical path are required by the measurement program and no applicable spectrum can be found that is void of the target gas absorption, a synthetic background must be used. A synthetic background is one that is made from a single beam field spectrum, and it may have some of the target gas in it. Once a field spectrum has been selected, a new baseline is made to replace all the absorbance features in the wave number region used for analysis with a new curve that resembles the instrument baseline as closely as possible. This new baseline is made by connecting the data points along the original baseline with straight line segments, or by some other appropriate fitting procedure, thereby removing any absorbance features. The difficulty with this method is knowing where the baseline actually is. No points within any absorbance feature of the original spectrum can be used. A portion of a field spectrum and the synthetic background made from it by connecting the data points with very short straight line segments is illustrated in Figure 4. The original field spectrum has absorption lines due to water vapor in it.

Selecting the points for the baseline for a synthetic background may be quite difficult when large wave number regions are used or when the curvature of the baseline is high. This is a problem with the wave number region used for the analysis of ozone, for example.

8.4.5 Procedure

8.4.5.1 From the set of available spectra, select one spectrum by using the following criteria.

8.4.5.1.1 The target compound concentration should be near a minimum.

8.4.5.1.2 The interfering species concentration should be at a minimum.

8.4.5.1.3 The vapor pressure concentration should be in the mid range of water vapor concentrations during the period for which the background is to be used.

8.4.5.1.4 The return intensity at 987 cm^{-1}, 2520 cm^{-1}, and 4400 cm^{-1} should be normal for this instrument and for the particular path length used.

8.4.5.2 Once the candidate spectrum has been selected, use the available software to create a synthetic background.

8.5 Production of a Water Vapor Reference Spectrum

8.5.1 Purpose. This section instructs the FT-IR operator on how to create a water vapor reference spectrum from a single beam field spectrum. Absorption due to water vapor represents an interference to the spectral region of the target gas, and these interferences must be accounted for in whatever analysis routines that are finally used. Water vapor presents the predominant absorption features in the spectra acquired by the FT-IR, and the operator can expect it to interfere with the target gas spectrum. It is essentially impossible to create a water vapor reference spectrum in the laboratory by using a cell because the concentrations required are not normally attainable, and measuring the amount of water vapor in the cell is very difficult. Therefore, the water vapor reference spectrum has to be made from the acquired field spectra. Fairly large changes in the atmospheric concentrations of water vapor can occur rapidly, and that generally implies that a new water vapor reference spectrum has to be created.

8.5.2 Assumptions

8.5.2.1 The wave number regions for the analysis of the remaining spectra have previously been chosen.

8.5.2.2 Field spectra have been acquired, and one of them is to be used for a water vapor reference spectrum.

8.5.3 Additional Sections Referenced. Activities and evaluations performed in Section 8.4 are referred to in this section.

8.5.4 Methodology. The first step in the process of creating a water vapor reference is the selection of a single beam spectrum from the set available. The selection is based on a number of criteria. During the process, any absorbance due to the target gas must be subtracted from the water vapor reference. This can be done in a

number of ways, but until the operator gains some familiarity with the FT-IR analysis process, it is best to do this by starting with a spectrum that contains a reasonable amount of the target gas and any other interfering species. In this way it may be possible for the operator to see the absorbance feature and do the subtraction interactively. Otherwise, the concentration of the target gas needs to be measured by using an analysis routine and then subtracted by using the library reference spectrum.

There is also some argument that can be made to specifically acquire a spectrum with a large number of scans and to use that as a water vapor reference spectrum. The large number of scans ostensibly gives a smaller noise value. This argument is not generally true with the FT-IR systems because the calculated RMS noise is not usually generated by the system electrical noise. The majority of the calculated RMS noise seems rather to be the result of slight changes in the water vapor concentration and other atmospheric constituents from one spectrum to the other.

From the set of available spectra, one spectrum must be selected by using the following criteria.

- The target compound concentration should not be near a minimum. As the operator gains more experience at creating a water vapor reference he may want to minimize the target gas absorption if possible.

- The interfering species concentrations should not be near minima.

- The vapor pressure concentration should be in the mid range of water vapor concentrations during the period for which this particular water vapor reference spectrum is to be used. It should be remembered that many of the water vapor lines may be saturated as far as the instrument response is concerned. That implies that the time period that can be covered with any one water vapor spectrum must be carefully chosen. However, at the present time no explicit guidance concerning the length of time that a single water vapor reference is valid can be given. Perhaps the best advice is to compare the curvature of the baselines of the single beam spectra. If that is changing rapidly, a new water vapor reference spectrum may have to made.

- The return intensity at 987 cm^{-1}, 2520 cm^{-1}, and 4400 cm^{-1} should be normal for this instrument and for the particular path length used. Any spectrum that has been acquired in foggy or rainy conditions should not be used.

The last criterion is included as a check to determine that the instrument is operating correctly.

Once the candidate spectrum has been chosen, it must be turned into an absorption spectrum by using the background spectrum created in Section 8.4.

The new water vapor absorbance spectrum must now be analyzed for the presence of absorbance due to the target gas. To accomplish this, the normal analysis procedure can be used if an older version of the water vapor reference spectrum already exists. It is likely that using the older water vapor reference will result in somewhat higher error bars from the analysis. At the present time this can be ignored. The results of this analysis should be zero, but it can give a positive result if there is an absorbance due to the target gas in the newly created water vapor reference. If a positive value exists then that amount of the target gas must be subtracted from the water vapor reference spectrum. The exact procedure to use for the subtraction process will depend on the software that the operator has.

If no other water vapor reference exists, the following procedure must be used. A set of 15 pairs of spectra must be acquired with the FT-IR. They should be taken so that no time elapses between them. They should be acquired with the same number of scans and the same resolution as the newly created water vapor reference spectrum. The individual 15 pairs are used to create 15 absorbance spectra. These spectra should not contain any of the target compound absorbance because they have been taken back-to-back, and it is hoped that each will contain the same amount of the target gas absorption. These spectra must then be analyzed for the target compound by using the newly created water vapor reference.

The average value of the results of this analysis should be zero. If it is not but some positive or negative bias exists, some amount of the target compound absorbance is still in the water vapor reference spectrum.

There are two possibilities to consider if a bias exists. The first is that the baseline of the newly created water vapor reference is not quite correct, and the second is that some of the target compound must be subtracted from the newly created reference spectrum. (This can give rise to either a negative or a positive bias.) At the present time no procedure exists to correct for curvature of the baseline. If the operator decides that baseline curvature is the primary problem, then there is little that he can do to correct the problem.

If a bias exists that is not from a baseline curvature then the operator must subtract some of the target gas from the newly created water vapor reference. If an interactive software mode for subtraction exists, the subtraction can be done in an interactive mode using the target gas reference spectrum as the subtrahend. If an interactive software mode is not available, the target gas reference can be used as follows. The target gas reference spectrum can be multiplied by an appropriate factor and the result subtracted from the newly created water vapor reference. The path length at which the water vapor reference spectrum was acquired is known and the target gas concentration is known in parts per million from the analysis above. The reference spectrum absorbance is given in terms of parts per million meters. So the operator must divide the absorbance of the spectrum by the path length in meters and by the ratio of the concentrations (reference/calculated). The resulting spectrum can then be subtracted from the created water vapor reference.

Repeat the analysis procedure and this process until the target gas concentration is zero.

8.5.5 Procedure

8.5.5.1 Select the single beam spectrum that is to be used for a water vapor reference using the criteria listed above.

8.5.5.2 Create an absorbance spectrum using the appropriate background spectrum.

8.5.5.3 Analyze the newly created water vapor reference for the target gas.

8.5.5.4 If necessary, subtract the proper amount of the target gas absorption from the water vapor reference.

8.5.5.5 Reanalyze the water vapor spectrum.

8.5.5.6 Repeat Sections 8.5.5.3 through 8.5.5.5 until the target gas concentration is zero.

8.6 Subtraction of Stray Light or Black Body Radiation

8.6.1 Purpose. This section instructs the operator how to subtract the stray light or black body radiation measured by the instrument from the field spectra. This procedure can be used by operators using either the monostatic or the bistatic instrument configurations. The subtraction for either configuration is performed by using single beam spectra.

8.6.2 Assumptions. Assumptions. For both the stray light component and the black body radiation component measurement the instrument must be operating at its equilibrium conditions. That is, the FT-IR must have been allowed to warm up. As long as the operating conditions are not changing rapidly, the spectra should be acquired by using a large number of scans so as to provide a good signal-to-noise ratio. Since these spectra have to be subtracted from the field spectra, noise will be added to the analysis, and a longer acquisition time minimizes the electrical noise. Acquiring data for up to one half hour is satisfactory. Not much is gained in the signal-to-noise ratio by acquisition times longer than that.

8.6.3 Additional Sections Referenced. No other sections are referenced.

8.6.4 Methodology. The procedure for subtracting stray light is primarily to be used for the removal of a spurious signal from FT-IR instruments using the monostatic configuration with a second beam splitter. While it is possible to have scattered light that gives rise to unwanted signals in instruments using the other geometric configurations, this component is very difficult to measure and is considered to be a difficulty that the manufacturer has to deal with. This type of stray light subtraction will not be discussed further in this method. Instrument manufacturers strive to have the stray light as small as possible compared to the intensity returning from the retroreflector, but to remove it all can be a formidable task, and it should therefore be measured and subtracted. It is fairly simple to show mathematically that, whatever percentage of the return intensity the stray light intensity represents, that percent error will be carried through to the final result in the analysis. The presence of stray light can sometimes be detected visually in the single beam spectrum as is shown in Figure 3. Therefore, it has to be subtracted from the spectra if the errors in the data are to be minimized. The intent of the specific program may indicate it is not necessary to subtract the stray light spectrum from the field spectra; an example is when only the identification of compounds is necessary.

Once the stray light intensity is known and measured it should not change unless some component of the optical system is changed or reoriented. Therefore, the stray light spectral subtraction can easily become part of the routine analysis. Since the stray light component is generated inside the instrument, its intensity is not path-length dependent. This means that the stray light will change its intensity relative to the return intensity as the path length changes. It can easily be measured by simply slewing the instrument away from the retroreflector and acquiring a spectrum.

The need to subtract the black body radiation arises only in bistatic systems that have an unmodulated source at one end of the physical path. It is convenient to think that the black body radiation comes from the fact that the field of view of the receiving telescope is larger than the angle that the infrared source subtends; therefore, the instrument allows the infrared energy from the surroundings into the system. This is only partially true, and if the instrument is at the same temperature as the surroundings, the black body radiation can be thought of as coming entirely from the instrument enclosure. That is because all black body radiators at the same temperature radiate the same amount of energy per unit area. Therefore, the easiest way to measure the black body spectrum is to turn the source off and then acquire a spectrum.

There is an additional problem with the black body radiation curve that occurs when the instrument is pointed at the sky. When this situation occurs it is very likely that there will be an emission spectrum superimposed on the black body curve. The emission spectrum arises from several atmospheric gases and is quite variable. Even the smallest amount of cloud cover will dramatically change the intensity of this spectrum. That fact makes it almost impossible to subtract the emission spectrum totally. It is advisable to avoid pointing the instrument so that it has the sky in the field of view. If that cannot be avoided, the operator should be aware that higher than normal errors can occur in the data in the region below about 1050 cm^{-1}.

Small changes in the ambient temperature (10 ^{o}K) are not thought to be significant in the black body radiation, and thus one spectrum should be usable for an extended period. These spectra should be subtracted from the field spectra after the single beam spectra have been obtained. If the interferograms are subtracted and the single beam is then calculated, a different result is obtained. The reason for that is not fully understood at this time.

8.6.5 Procedure

8.6.5.1 Measure the stray light in the instrument by slewing the instrument off the retroreflector.

8.6.5.2 Subtract this spectrum from each single beam field spectrum before proceeding with the analysis.

8.6.5.3 Measure the black body radiation spectrum by turning the source off.

8.6.5.4 Subtract this spectrum from each single beam field spectrum before proceeding with the analysis.

8.7 Generation of an Absorbance Spectrum

8.7.1 Purpose. This section instructs the operator on how to generate an absorbance spectrum from the field spectra and an appropriately chosen background spectrum.

8.7.2 Assumptions. The following assumptions are made.

8.7.2.1 An appropriate background spectrum is available.

8.7.2.2 All the field spectra have been converted to single beam spectra.

8.7.2.3 All the field spectra have been corrected for stray light and the black body radiation if necessary.

8.7.3 Additional Sections Referenced. No other sections are referenced.

8.7.4 Methodology. Beer's law is the underlying physical law that governs the way the least squares analysis is performed. Mathematically, Beer's law is written as $I(\nu) = I_0(\nu)\exp(-\alpha CL)$. In order to calculate C, the concentration of the gas in the atmosphere, one must divide by I_0 and take the logarithm of the result. That gives $\ln(I_0/I) = \alpha CL$. The spectrum described by the term $\ln_{\theta}(I/I)$ is called the absorbance spectrum. The FT-IR analysis is actually done by using the logarithm to the base 10, but this is normally transparent to the operator.

All software packages that are available for least squares analysis allow the generation of an absorbance spectrum. The operator is generally asked to supply the background spectrum, but then the process is mathematically performed by the computer. It is important to understand that some correction may be necessary to the field spectra before they are converted to absorbance spectra.

8.7.5 Procedure. Use the available software to create the absorbance spectra.

8.8 Correction for Spectral Shifts

8.8.1 Purpose. This section instructs the operator on how to align two spectra so as to minimize the errors involved with spectral shifts.

8.8.2 Assumptions. The field spectra have been acquired and are in the single beam format. A water vapor reference that is to be used for analysis is available. A background spectrum has been prepared and is available for use. In order to check for a shift between the field spectrum and the reference spectrum, an absorbance spectrum must be used if the reference spectrum is an absorbance spectrum.

8.8.3 Additional Sections Referenced. No other sections are referenced.

8.8.4 Methodology. There are three ways that a spectral shift will affect the FT-IR data analysis. The first is when a spectral shift between the field absorbance spectrum and the water vapor reference spectrum exists. The second is when a spectral shift between the field absorbance spectrum and the library reference spectrum for the target gas exists. The third is when a nonsynthetic background is used and a spectral shift exists between the background and the field spectra. A spectral shift compared to the instrument may also be noticed when new reference spectra are purchased or produced on an instrument other than the one used for data acquisition. The

first two of these comparisons are done using absorbance spectra, but the third must be done with single beam spectra.

When a synthetic background is used, any spectral shift between the field spectrum (single beam) and the background spectrum (single beam) is irrelevant. That is because the synthetic background generation process does away with all spectral features of interest.

A question arises as to what sort of a shift is really important to the analysis. Some researchers discuss this in terms of absolute quantity of wave numbers. This is not really satisfactory because then apparently small shifts are important for some spectral features while at other times they are not. If a Gaussian shape is used to describe the absorption line shape, then it is possible to show mathematically that when the absorption feature of interest shifts by about 10% of the line width (FWHH), a 5% error occurs in the least-squares analysis. If a Lorentzian line is used to describe the actual line shape, the shift can be about 15% of the line width (FWHH) before a 5% error occurs when least-squares analysis is used. Experimentally, if a 5% error is acceptable, it is only seldom that line shifts will be important. However, if a 1% error is all that is allowed by data quality objectives, then the same calculations show that a 0.5% shift (FWHH) of the line is all that can be tolerated. This really implies that wave number shifts will probably not be important when broad absorption features (such as presented by ozone) are used but will be crucial for narrow absorption features (such as presented by carbon monoxide). The predominant spectral feature in the FT-IR open path field spectra is water vapor, and the pressure-broadened lines of water have a line width (FWHH) of about 0.2 cm^{-1}. Since water is the predominant feature, the errors produced by the classical least-squares technique will be primarily caused by how well water is handled in the analysis. That means that water vapor must always be checked for shifts.

Experience has shown that when a spectral shift occurs, the magnitude of the shift is different in the C–H (2900–3000 cm^{-1}) stretch region than it is in the fingerprint region. This implies that all line shifts are caused by some change in the interferometer and/or the system optics. If that is truly the case, then the shift is linear in wave number, and a linear correction must be applied when the correction is made throughout the field spectrum. Some computer software automatically identifies a wave number shift and then shifts the entire spectrum by the proper amount. If that software is available it should be used.

The best place to determine whether a shift has occurred is in the low-wavelength or high-wave-number end (in the region of the C–H stretch) of the spectrum. It may also be possible to automatically determine during the acquisition phase whether a shift has occurred and then shift each individual spectrum as it is being acquired. To do that, some known spectral feature present in every spectrum must exist. Thus it may be possible to select some water vapor line that is present in all the spectra covering a particular time period and compare all the spectra with that particular line. A shift of that kind guarantees that all the field spectra are aligned one to the other but does not automatically guarantee that the field spectra and the reference spectra will be aligned. At any rate, at the present time no such line has been agreed upon, and it may not be possible to select a single line for all occasions.

If shifting software is not available, two problems are presented to the operator. The first is how to recognize a shift and the second is how to correct for it over the entire wave number region.

Recognizing that a shift has occurred can be facilitated by subtracting one spectrum from another. If a small (less than the line width) shift has occurred, the difference will appear as an "S”-shaped curve. This kind of curve is closely related to the first derivative of the line shape if the shift is small. Determining the absolute magnitude of the shift can be a difficult task, and no simple mathematical relation exists between the features of the S-

shaped curve and the magnitude of the shift. At the present time, the best estimate of the magnitude of the shift is obtained from measuring the difference of the peak positions of the two lines. However, this is best done on spectra that have been interpolated to increase the number of data points. Or, if the operator so chooses, he may zero fill the interferogram by a factor of 2 or 4 in order to increase the number of data points.

Since the correction for a shifted spectrum is most likely linear in wave number, the shift must be done in steps if appropriate software is not available. A shift between the individual library reference spectra and the field absorbance spectra can be overcome because the library spectra can be individually shifted. It may also be possible (depending on the software available) to rename the water vapor reference spectrum so that there are two or three of them, each with its own shift, and then do all the analysis simultaneously. The same procedure can be used to overcome a shift between the field spectra and the background spectrum when a synthetic background is not used. However, if the shift is small (less than the data point spacing) but significant, then all the spectra may have to be interpolated or zero filled to correct for the shift.

8.8.5 Procedure (applicable when shifting software is not available).

8.8.5.1 Subtract the two spectra and examine the residual for an S-shaped curve. Do the background and the field spectra first because these have to be done with single beam spectra.

8.8.5.2 Determine the magnitude of the shift by comparing the peaks of the individual lines.

8.8.5.3 Shift one spectrum with respect to the other. This will have to be done in the target gas analysis regions and may have to be done several times.

8.8.5.4 Create absorbance spectra from the field spectra and the background and repeat Sections 8.8.5.1 through 8.8.5.3.

8.8.5.5 Perform a correction for shift to the water vapor reference spectrum, the reference spectrum, and the background if necessary. The field spectra should not be shifted, as this requires the most time.

8.9 Analysis of the Field Spectra for Concentration

8.9.1 Purpose. This section instructs the user on the procedures used for the analysis of FT-IR absorbance spectra in order to produce gas concentration values.

8.9.2 Assumptions. The spectra have been converted to absorbance spectra and all changes and corrections listed in the above sections have been made to them. A set of reference (library) spectra that includes the target gas, the interfering gases, and a water vapor reference is available for use. A software package that is capable of performing least squares analysis on the spectra is available.

8.9.3 Additional Sections Referenced. No other sections are referenced.

8.9.4 Methodology. There are a number of ways to analyze the spectra in order to obtain concentration data. These include peak height or peak area analysis, spectral subtraction, partial least squares, iterative least squares, principal component analysis, etc. While these methods are all usable, this procedure uses classical least squares as described mathematically by Haaland and Easterling (13). The use of classical least squares requires that the spectra be prepared in a specific way for the analysis to work efficiently and effectively. Thus the majority of Compendium Method TO-16 is concerned with preparation of the spectra.

It is likely that, when the other techniques cited above are used, the data will have to be prepared in a different manner. Under those conditions the steps of this procedure that deal with spectral preparation are not usable.

Whatever software is available to perform the classical least-squares technique, it must be able to perform the analysis of a single target gas in the presence of interfering species. It is only seldom that the range of wave numbers used for the analyses will be free of absorbances due to interfering species. This is particularly true of water, and the analysis routines must be able to perform a multiple linear regression of the field spectra.

There are a number of software packages that are in use that perform classical least-squares analysis of the spectra. These all have somewhat different user interfaces and operating conditions, but in all cases the mathematical algorithms are transparent to the user. Therefore, the software packages are not described in detail here. Since the classical least-squares analysis is a multiple linear regression, it must have certain items available for it to function. The items that are common to all available analysis packages include the target gas reference spectrum, the background (or I_0) spectrum, the water vapor reference spectrum, and whatever interfering gas reference spectra are necessary. Most software packages are, however, only available with the FT-IR instrument itself. The primary concern for this procedure is that the analysis itself follows the classical least squares described mathematically by Haaland and Easterling (13).

8.9.5 Procedure. The individual steps in this section are dependent on the specific software available to the operator. Since the individual packages are not described here, the specific steps required for any one package are not either.

8.10 Post-Analysis Review of the Data

8.10.1 Purpose. The purpose of this section is to provide the operator with a way to check the data for possible problems. This procedure primarily makes use of plotted data in the form of the concentration of one gas plotted against the other and of time sequence plots. There is one statistical determination that can be used to determine if correlations exist between pairs of data. The primary tool used here is for the operator to look for trends in the data where none should exist. The specific tests of the data are described below.

8.10.2 Assumptions. The only assumption is that all of the spectra have been analyzed by use of the least-squares analysis software.

8.10.3 Additional Sections Referenced. No other sections are referenced.

8.10.4 Methodology. The operator should make several plots of the concentration data. The first should be a set of plots of target gas concentration versus time. These plots should be examined for any expected trends in time. For example, ozone in rural areas generally follows a diurnal pattern with a minimum at about 0600 hours and a maximum at about 1500 hours. The concentration values should not go negative to any great extent; although around zero concentration the values may go slightly negative, the average value over time should be zero. Suppression of negative values should never be done in the analysis because then a zero average can never be achieved. If values go negative with time in a regular fashion, then something is amiss with the data. The most likely case is that there is a small remaining absorbance due to the target gas in the water vapor reference spectrum. If the concentration values are much higher than the anticipated values, there may also be a problem with the water vapor reference spectrum. In this case there may have been too much of the target gas absorbance subtracted from the water vapor reference. If that is so, the water vapor reference should be fixed and then the data reanalyzed.

Plots should be made of the target gas concentration versus the water vapor. If the variability of the target gas and the water vapor are correlated and this is not expected, the water vapor reference spectrum must, in most cases, be corrected.

The next step is to plot the concentration values of those gases whose concentrations are expected to be correlated. This includes any gases that are derived from the same source. If the variability of these gases is not correlated, the data must be carefully examined for the cause. There are no good guidelines to judge what is causing that problem, but a nonlinear response of the instrument for one of the gases is a possibility. If that is suspected, the operator must carefully examine the QA data for possible clues.

Another check of the instrument can be made by analyzing the spectra for N_2O. Nitrous oxide is present naturally in the atmosphere with a concentration very close to 300 ppb. The variability in this concentration should be less than ±10%. If this is not the case then all the data must be suspect. Another gas that is always present in the atmosphere is methane. The variability of methane can be fairly large, particularly in the proximity of landfills. That means it is somewhat more difficult to use as a quality check of the data but it can still be used. The value of the atmospheric concentration of methane should never fall to less than about 1.7 ppm.

If the FT-IR instrument is a bistatic one and there is any possibility that the instrument was admitting energy from the sky when the black body radiation measurement was made, there might be a problem with the observed detection limits. If that occurs, it is possible that the analysis is flawed because of emission spectra in the black body radiation.

Another check for the quality of the data can be obtained by examining the errors calculated by the least-squares analysis routine. If there is an abrupt change in the relative error and no obvious reason such as an abrupt change in the water vapor concentration, it may be that a new interfering species, not accounted for in the analysis, has been measured.

Once these checks have been made on the data, the operator must follow the data quality checks that have been written for the specific program that is being studied.

8.10.5 Procedure.

8.10.5.1 Plot the data as a function of time and check for unexpected trends.

8.10.5.2 Plot the target gas data concentration as a function of water and determine if the variability is correlated.

8.10.5.3 Determine whether N_2O and CH_4 have been correctly measured.

8.10.5.4 Determine whether correlation of the data exists where correlation is expected.

8.10.5.5 Review all the QA/QC data taken in compliance with the specific data quality objectives.

9. Quality Assurance

9.1 Summary

The section provides guidance to the operator in determining how well the FT-IR sensor is operating. While this section is labeled “quality assurance”, it is by no means adequate to serve as a quality assurance project plan or program plan. Project and program plans are meant to address the specific data quality objectives of a monitoring program, and the final use of the FT-IR data and cannot be adequately covered in this document. Some of the procedures are limited in scope because a satisfactory procedure has not been developed at this time.

9.2 The Determination of Method Noise or Method Noise Equivalent Absorption

9.2.1 Purpose. The purpose of this section is to allow the operator to determine the method noise. This determination should form part of the routine quality assurance checks made of the instrument. It should be made at least once a day for extended programs and every time the instrument is moved or otherwise changed. This procedure is used to judge whether the instrument is operating properly but not as a gauge of the quality of the data.

9.2.2 Assumptions

9.2.2.1 This procedure assumes that spectra have been acquired with the same operating parameters (number of co-added scans, resolution, etc.) as the field spectra. The one exception is that the spectra used to determine the method noise should be taken so that no time elapses between them.

9.2.2.2 It is also assumed that software exists that will allow this determination to be made automatically by computer.

9.2.3 Additional Sections Referenced. No other sections are referenced.

9.2.4 Methodology. Instrumental noise is generally considered to be the random fluctuations in the recorded signal. That is not exactly true for the FT-IR system when the data are acquired along a long, open path. Evidently, the time required to allow small but measurable changes in the gaseous atmospheric constituents is short compared to the normal acquisition time of the spectra. Because of that, when two spectra are used to create an absorbance spectrum there is a variability in the result that is not electronic noise alone. This is defined here as the method noise. It is important because it cannot easily be done away with and will contribute to the error of the measurement.

The determination of method noise uses the statistical quantity called the RMS deviation. The mathematical routine normally used for this calculation performs a linear least-squares fit (linear regression) using the data points over a specified wave number region and calculates the RMS deviation from that line. The RMS deviation is defined as the square root of the sum of the differences squared divided by the quantity N-2. The number N is the total number of data points. The differences are calculated by taking the difference between the actual data point and the line; they are then squared and added.

The actual range of wave numbers that can be used changes with resolution, but the number of data points does not. The number of data points used should be 80 points. Thus for a 1-cm^{-1} resolution, the range of wave numbers is 40, because the instrument acquires a data point every half resolution unit. Since this measurement is considered to be the determination of an instrument parameter, the wave number region or regions should be chosen to minimize the effect of water vapor. The water vapor concentrations along the path are known to change rapidly, and that will perhaps cause most of the variability in the signal.

The two single beam spectra that are used to measure the noise should be taken without any time lapse between them. These two spectra are then used to create an absorbance spectrum. Which of the two that is used as the so-called background is irrelevant. Three wave number regions are then used for this determination. For this procedure, the regions are based on a 1-cm^{-1} resolution and are 968–1008, 2480–2520, and 4380–4420 cm^{-1}, respectively. Other regions may be used, but the operator should try to cover the range of wave numbers that are being measured. The 80 data points used in the measurement should also be adhered to. This data should then be recorded and plotted on a quality control chart for comparison purposes.

9.2.5 Procedure

9.2.5.1 Record two spectra with the same operational parameters that will be used for the acquisition of the field spectra. Do not allow any time to elapse between these spectra.

9.2.5.2 Create an absorbance spectrum by using either of the two spectra taken in Section 9.2.5.1 as a background.

9.2.5.3 Analyze this absorbance spectrum for the RMS deviation in the three wave number regions 968–1008 cm^{-1}, 2480–2520 cm^{-1}, and 4380–4420 cm^{-1}.

9.2.5.4 Record this data in a notebook and plot it on a quality control chart.

9.3 The Measurement of the Return Beam Intensity

9.3.1 Purpose. This section provides guidance to the measurement of the return beam intensity in the case of the monostatic system or the intensity of the IR source at the FT-IR in the case of the bistatic system. This procedure needs to be done only once as long as the detector or the infrared source does not change.

9.3.2 Assumptions. In order that these measurements be realistic, the stray light component or the black body radiation should be subtracted from the spectra. This means those measurement results should be available to the operator or should be made in conjunction with this measurement.

9.3.3 Additional Sections Referenced. Refer to Section 9.4, Measurement of Stray Light, and Section 9.5, The Measurement of Black Body Radiation, if applicable.

9.3.4 Methodology. The return beam intensity determines the operational signal-to-noise ratio of the FT-IR system. This intensity is a variable and depends on the path length chosen, the water vapor in the atmosphere, and other atmospheric conditions. The primary atmospheric conditions that make the return beam intensity change are fog, rain, snow, and sleet. Of these, fog has by far the largest effect. Another cause for a change in the return beam intensity is pollen in the atmosphere. This happens in the spring in areas where there are a large number of pine trees. Finally, for the monostatic geometry, which uses a retroreflector, condensation on the mirror can make dramatic changes in the return beam intensity. There are also instrumental causes of changes in the return beam intensity but they are beyond the scope of this document.

For these reasons, it is prudent to include in a quality assurance program the measurement of the return beam intensity. If the return energy has been degraded by an unacceptable amount, the operator must change the length of the path. Whether the return is acceptable or not is dependent on the data quality objectives from the quality assurance program plan.

This procedure is separated into two parts. The first is a procedure for measuring the return beam intensity as a function of path length. The second is the measurement of return beam intensity as a function of time.

There are two reasons to measure the return beam intensity as a function of path length. The first is to determine when the energy becomes intense enough to saturate the detector. The second is to determine when the infrared energy becomes too small to measure. These measurements then determine experimentally the minimum and maximum usable path length. There are a number of reasons why the return beam intensity should be monitored as a function of time. The primary one is that the return beam intensity will change according to varying weather conditions. The operator must become familiar with the magnitude and the rapidity of these changes.

9.3.5 Procedure

9.3.5.1 Return Beam Intensity as a Function of Path Length.

9.3.5.1.1 Place the light source or the retroreflector at a short distance, say 25 meters, from the detector.

9.3.5.1.2 Align the system to maximize the return signal.

9.3.5.1.3 Record a spectrum and convert this spectrum to a single beam spectrum**.**

9.3.5.1.4 Record the intensity levels in the 987-cm^{-1} region and in the 2,500-cm^{-1} and the 4,400 cm^{-1} regions. The reason the wave numbers are not given specifically is that the operator should select a maximum in the baseline return intensity in these regions.

9.3.5.1.5 Examine the detector cutoff region at about 650 cm^{-1}. If a dip occurs in this region or the baseline is elevated above zero, then the detector is already saturated.

9.3.5.1.6 If there is no indication of saturation, move the light source or the retroreflector so that the distance separating it and the detector is smaller. Repeat Sections 9.3.5.1.1 through 9.3.5.1.5.

9.3.5.1.7 Continue this process by cutting the distance in half until the single beam spectrum exhibits saturation as described above in the 650-cm^{-1} region. Record this distance. This distance represents the minimum path length that can be used with this particular instrument without altering the instrument.

9.3.5.1.8 Next, move the light source or retroreflector to a distance of 100 m.

9.3.5.1.9 Realign the instrument to maximize the signal.

9.3.5.1.10 Record a spectrum and convert it to a single beam spectrum.

9.3.5.1.11 Record the intensity levels at the same wave numbers as used above.

9.3.5.1.12 Repeat Sections 9.3.5.1.8 through 9.3.5.1.11 by increasing the path length in 50-m increments until the intensity levels no longer change. For the monostatic geometry mode, this will occur when all the energy being recorded comes from the stray light in the instrument. For the bistatic mode, the return signal will diminish to zero in the 4000-cm^{-1} region and then will evolve into the black body radiation spectrum.

9.3.5.1.13 Plot a graph of the return intensity versus path length.

9.3.5.2 Measurement of the Return Beam Intensity as a Function of Time. At least once every day of operation the return beam intensity should be recorded at the wave number regions given above. More frequent measurements should be made when the atmospheric or other conditions listed in Section 9.3.4 occur. The atmospheric conditions should also be recorded. Water vapor plays an important role in the recorded beam intensity so that the partial pressure of water should also be calculated and recorded. A continuous plot of these data should be made showing the intensity as a function of time. The graph should include notations for the various atmospheric conditions listed above.

9.4 The Measurement of Stray Light

9.4.1 Purpose. The monostatic FT-IR systems are prone to having stray light in the instrument. To obtain the best possible accuracy, this stray light component must be subtracted from the field spectra before the analysis is performed. This section describes how to measure the stray light component and is applicable to only the monostatic geometries that modulate the beam with the interferometer before the infrared energy is transmitted along the path and that use a second beam splitter to direct the beam. There are other sources for stray light that arise from overfilled optical components. These are a problem for the manufacturer and are not addressed in this document.

9.4.2 Assumptions. The primary assumption for this procedure is that the FT-IR system being used is of the monostatic geometry. The system has been operating sufficiently long to be past any warm-up periods and it is using the same resolution as when it is acquiring the normal field spectra.

9.4.3 Additional Sections Referenced. No other sections are referenced.

9.4.4 Methodology. The easiest way to measure the stray light with a monostatic system that modulates the beam before the energy is transmitted along the path is to simply slew the system away from the retroreflector. Once this is done, the operator should acquire a spectrum using a large number of co-added scans. If the time required to acquire this spectrum cannot be at least 4 times the length of time to acquire the field spectra, he should then use the longest time possible. The issue here is one of electronic noise, and the electronic noise should diminish as the square root of the time needed to acquire the spectrum. Changes in the atmospheric constituents play no role in this measurement.

This spectrum should be saved as a single beam spectrum with an appropriate name, and it must be subtracted from the single beam field spectra before they are converted to absorbance spectra.

A second way to measure the stray light is to cover the receiving telescope with some opaque, non-reflecting material. Any material that is reflecting acts as a mirror and will give erroneous readings. Any material that is

not opaque will allow some of the beam returning from the retroreflector to be transmitted to the detector. This method is not recommended.

This measurement must be done at the beginning of operation and every time the instrument is altered in any way. For those programs that are short-term field programs, the measurement should be made at the beginning of each field program.

9.4.5 Procedure.

9.4.5.1 Set up the instrument in exactly the same way as it will be used to acquire field spectra.

9.4.5.2 Slew the transmitting telescope off the retroreflector so that there is no beam return signal.

9.4.5.3 Acquire a spectrum.

9.5 The Measurement of Black Body Radiation

9.5.1 Purpose. FT-IR systems generally have a field of view larger than the solid angle that the light source or the retroreflector subtends at the far end of the path. The bistatic systems (or those that do not transmit the beam through the interferometer before it transmitted along the path), therefore, admit radiation to the detector from the surrounding background. These systems also respond to any radiation coming from the instrument itself (the instrument is also a radiator of energy). This radiation is commonly referred to as the black body radiation and it must be subtracted from the single beam spectra before the analysis is performed. This procedure describes how to measure that radiation.

9.5.2 Assumptions. The instrument must be set up in the same manner and with the same background that will be in its field of view during the acquisition of the field spectra.

9.5.3 Additional Sections Referenced. No other sections are referenced.

9.5.4 Methodology. The FT-IR systems available today use some form of a heated element as a source of infrared energy. These elements generally have a temperature in the vicinity of 1500°K. The terrestrial surroundings in which the FT-IR operates generally have a temperature around 300°K. All things above absolute zero radiate energy according to their temperature and have a very well known energy distribution in wave number. The distribution of energy peaks at a wave number that is temperature dependent with the cooler body having a peak at lower wave numbers. Also, the energy distribution of a cooler body is lower in intensity at all wave numbers than the distribution of a hotter body. The question arises of what the ratio of intensities is of these two sources. This ratio at the peak of the 300 degree source is about 5. That is, the surroundings can represent about 20% of the energy of the source. Therefore, it must be subtracted from the spectra before the analysis is performed.

The simplest way to acquire a black body spectrum is to set up the instrument in exactly the same way it will be run to take the field spectra. A spectrum should then be acquired with the light source turned off. This spectrum should be saved with an appropriate name.

This spectrum does not appear to change dramatically when the instrument is pointed at terrestrial targets such as buildings or trees. Nor does it change dramatically with slight changes in the ambient temperature (±10°K). A 10% change in temperature will shift the peak by 10%, and that may become important. Remember, however, that a 10% change in temperature is about 30°C. The black body spectrum does, however, change dramatically if the sky is included in the instrument's field of view. In this case an emission spectrum appears from the atmosphere, and this is very difficult to handle. The black body spectrum can also change dramatically if hot

sources other than the primary light source are allowed into the field of view of the instrument. The operator is advised to take precautions so that these conditions are avoided.

In order to minimize the noise introduced by the subtraction process, the number of scans used to acquire the spectrum should be large. An acquisition time of more than 15 min is probably excessive. It is prudent to run such a spectrum at least once every day during the study. These spectra should be investigated for changes, particularly when there are large swings in temperature. This is possible during the early fall, when the temperature can range from cold at night to quite warm in the daytime.

9.5.5 Procedure

9.5.5.1 Set up the FT-IR along the same path that will be used to acquire the field spectra.

9.5.5.2 Acquire a spectrum over a long acquisition time with the infrared source off.

9.5.5.3 Store the spectrum with an appropriate name.

9.6 The Determination of the Detection Limit

9.6.1 Purpose. The purpose of this routine is to provide the operator with a mechanism for determining the detection limits for the various gases. The definition of the detection limit is given here as the minimum concentration of the target gas that can be detected in the presence of all the usually encountered spectral interferences.

9.6.2 Assumptions. The instrument is operating with the same parameter settings as those used for collecting the field spectra. That is, the path length, resolution, number of co-added scans, and the apodization function are the same in both cases. If the instrument has an ancillary gas cell, this must be empty.

9.6.3 Additional Sections Referenced. No other sections are referenced.

9.6.4 Methodology. The detection limit of the FT-IR systems is a dynamic quantity that will change as the atmospheric conditions change. The variability of the target gas, water vapor, and all of the other interfering species concentrations contributes to the variability of this measurement. Some researchers have suggested that the I_0 spectrum used to create the absorption spectrum when measuring the detection limits be the same as that used for the field spectra. However, that cannot be done if a synthetic background is used since the field spectra are expected to contain some quantity of the target gas. If any other arbitrary background is used the measurement will certainly reflect the variability of the target gas, at least. To overcome most of the effects of this problem, the operator should use spectra whose acquisition times are no longer than about five minutes. If the field spectra are acquired at shorter times then the shorter time should be used. If the field spectra are acquired at longer times because the anticipated variability of the target gas is small, then it is appropriate to use the longer times.

The detection limit as determined in this procedure is the result of a calculation using a set of 15 individual absorption spectra. The 16 individual single beam spectra used for this determination are acquired in 5-min intervals and no time is allowed to elapse between them. The absorption spectra are then created by using the first and the second single beam spectra, the second and the third, and the third and the fourth, and so on until the 15 absorption spectra are obtained. These absorption spectra are analyzed in exactly the same way that all field spectra are to be analyzed and over the same wave number region. The analysis should result in a set of numbers that are very close to zero because most of the effects of the gas variability have been removed. The numerical results should be both positive and negative and for a very large set of data should average to zero. Three times the standard deviation of this calculated set of concentrations is defined to be the detection limit.

There is reason to believe that this procedure gives the most optimistic (lowest) value for the detection limit because it removes most of the effects of the interfering species. However, the other suggested procedures seem to introduce as much uncertainty, and this procedure may actually be used for further diagnostics of the post-analysis review of the data (see Section 8.10).

9.6.5 Procedure.

9.6.5.1 Acquire a set of 16 single beam spectra in exactly the same manner that will be used for the field spectra.

9.6.5.2 Use the first spectrum as a background to create an absorbance spectrum from the second spectrum.

9.6.5.3 Use the second spectrum as the background and create an absorbance spectrum from the third spectrum.

9.6.5.4 Continue this process until all 15 absorbance spectra have been created.

9.6.5.5 Analyze each of the spectra for the target gas concentration.

9.6.5.6 Calculate the standard deviation of the set of concentration values.

9.6.5.7 Multiply the result of Section 9.6.5.6 by 3 to obtain the detection limit.

9.7 The Determination of Precision

9.7.1 Purpose. Precision is a measure of the FT-IR system's ability to make repeatable measurements when challenged with the same sample. This section provides guidance to the operator on how to make that determination for some gases.

9.7.2 Assumptions. The FT-IR system has the capability for installing a gas cell in the beam so that the entire beam passes through it. This is something that the manufacturer has to build into the design of the system and is not under the control of the operator. While the measurements are being made, the instrument is operating in the same way that it is used to collect the field spectra.

9.7.3 Additional Sections Referenced. No other sections are referenced.

9.7.4 Methodology. The precision with which a measurement is made with the FT-IR instruments is, at the present time, very difficult to measure. The best method that has been suggested is one that uses a cell of some sort that is filled with a high concentration of gas and is then placed in the beam. However, this process is quite error-prone and it has not been shown to work well with a mixture of gases. A second difficulty is that it cannot be used for all the gases that can be potentially measured with the FT-IR. The primary reason is that the concentration of the gas in the cell has to be high in order to produce a measurable absorption. Many gases have a vapor pressure that is too low to achieve these concentrations. No procedure has been established for making these measurements of polar compounds. Additionally, not all the commercially available instruments have at the present time been designed to accept a cell in an appropriate position of the optical path.

However, for those instruments and for those gases that can be measured, the procedure is as follows. A cell whose length is short compared to the path length is filled with a high concentration of gas. The cell is placed in the infrared beam so that all of the energy passes through the cell. Then a set of spectra is acquired and these are converted to absorption spectra. These absorption spectra are analyzed for the target gas. The relative standard deviation of this set of measurements is given as the precision.

This procedure is also quite similar to the procedure for the measurement of accuracy. The measurement of precision, however, does not require an exact knowledge of the concentration of the gas, but rather the gas concentration must remain constant. Thus the gas concentrations used can be made up in the field at a lower cost to the monitoring program.

Determining the precision of the FT-IR monitoring system is complicated by the fact that the measurements are made over an open path in the atmosphere. It cannot be assumed that the concentration of the various atmospheric gases will be constant in time, and this fact will impact the precision measurements. This procedure calls for the precision measurements to be made by using the same path length that is generally used for acquiring field spectra. Therefore, the precision will vary in time and will be dependent on the variability of not only the target gas but also the variability of the interfering species. The precision measurement described is therefore a method precision and includes all of the parameters that must be considered in the field spectra analysis.

The cell can be filled in a number of ways, but the preferred way is to use a gas of the appropriate concentration from a prepared cylinder that has been purchased for this purpose. The proper mixture can be calculated as follows:

- The absorption coefficient of the gas can be calculated from the reference spectrum by using $\alpha = A/cl$, where A is the absorbance at the peak of the reference spectrum and cl is the concentration–path length product, which is supplied with the reference spectrum for the reference gas.

- Next, the desired absorbance when the cell is filled is selected. This can be set at 0.05.

- Then c is calculated from $c = A/\alpha l$, where $A = 0.05$, α is the absorption coefficient calculated above, and l is the length of the cell in meters if the reference gas has a concentration–path length product in parts per million per meter.

- The concentration calculated above has units of parts per million if the concentration–path length product for the reference gas has units of parts per million per meter. This is the concentration to use when purchasing a cylinder of gas. The fill gas of the cylinder must not absorb in the infrared, and the gas preferred for this is nitrogen.

Before the target gas is introduced into the cell, the cell should be flushed with nitrogen until at least five volumes of the cell have passed through it. At the present time the preferred method for introducing the target gas is with a flowing system. The gas should remain flowing during the measurement.

9.7.5 Procedure.

9.7.5.1 Calculate the appropriate concentration for the target gas and obtain a cylinder of that concentration.

9.7.5.2 Set up the instrument as it will be used to acquire the field spectra.

9.7.5.3 Place the cell in the instrument and flush it with dry nitrogen so that at least five volumes of the cell have passed through it.

9.7.5.4 Flow the target gas through the cell, and after three volumes of the cell have passed through, acquire a set of 15 spectra.

9.7.5.5 Analyze these spectra for the target gas.

9.7.5.6 Express the relative standard deviation of this set of concentrations as the precision.

9.8 The Determination of Accuracy

9.8.1 Purpose. Accuracy is a measure of the ability of the FT-IR to measure a known concentration of gas. This procedure may allow the operator to determine the accuracy of the FT-IR measurements for some gases. This measurement is very difficult to make and no exact procedure has been accepted.

9.8.2 Assumptions. The FT-IR must have the capability for installing a gas cell that is short compared to the path length in the instrument so that the entire infrared beam passes through it. This must be included in the manufacturer's design of the instrument, and whether or not the cell can be placed in the beam is not under the control of the operator. The measurements for accuracy should be made with the instrument operating in the same way as it is when acquiring normal field spectra.

9.8.3 Additional Sections Referenced. No other sections are referenced.

9.8.4 Methodology. The general procedure to be used for the determination of accuracy is essentially identical to the procedure for the determination of precision. The difference is that for the measurement of accuracy the concentration of the gas in the cell must be known. Obtaining this knowledge poses some special problems, and preparation of the sample gas by the individual operators is not recommended at this time. Rather, whenever possible a cylinder of prepared gas should be purchased; for convenience, this prepared mixture is called the reference gas for the rest of this procedure. However, the vapor pressure of some gases is too low to allow the purchase of appropriate concentrations. Even if a cylinder is purchased, there is some difficulty with knowing what the concentration in the cell is, particularly for the polar compounds.

If a cell is to be used for this measurement then the first step is to calculate the concentration that is required. It is anticipated that the accuracy of the measurement is dependent on the concentration that is being measured. Therefore, the operator must make some judgement of what that concentration is to be. To obtain the concentration in the cell, the operator must multiply the anticipated concentration by the ratio of the path length used for the monitoring program to the cell length. Thus if the path length to be used in the acquisition phase is 100 m and the cell length is 20 cm, then the operator must multiply the anticipated concentration by 500 to get the required concentration of the reference gas in the cell.

Once the proper mixture of gas has been obtained, the operator must introduce it into the cell. At the present time it is recommended that the gas should be flowed through the cell continually during the measurement. Before the measurement is attempted, the gas should be allowed to flow through the cell until at least five volumes of the cell have passed through it.

At the beginning of this measurement the cell should be flushed with dry nitrogen and then a spectrum should be acquired. The reference gas is then flowed through the cell and a second spectrum acquired while the gas is flowing. The cell should then be flushed with dry nitrogen again and a third spectrum recorded.

The average value of the target gas concentration found from the first and third spectra is subtracted from the value determined for the target gas from the second spectrum. This value is then used as the recorded value for the measurement. This procedure is repeated five times in a day, and the average value of these five measurements is used as the accuracy measurement. The percent accuracy is then defined as the average value found above divided by the known concentration of the cylinder gas value times 100. This value should be recorded and plotted on a control chart made for that purpose.

If a flowing system is used, the flow rate must be small so that there is no measurable pressure change in the cell. Flow rates of a few cubic centimeters per minute are acceptable and would require no measurement of the pressure. When the cell is purged to remove the target gas, the volume of purge gas used should be at least 5 times the volume of the cell.

The procedure described here has not been studied in depth, and little written material exists in the literature. Questions such as what the material of the lead lines are to be made of, whether the pressure must be measured in the cell, and whether the lines have to be heated have not been answered at this time. It is also not clear

whether this procedure can be used with a mixture of gas or if only a single species must be used at a time. It seems possible that, in the future, a procedure using the water in the atmosphere can be used for this measurement. Absorbance due to water is in every important part of the spectrum that is used with FT-IR measurements, and it will be in every spectrum. Water can also be measured independently with techniques other than the FT-IR so that a verification step can be performed. However, the use of water has not been explored at all.

9.8.5 Procedure.

9.8.5.1 Calculate the required concentration of the reference gas and obtain a cylinder with that concentration.

9.8.5.2 Set up the FT-IR with the same operating conditions used to acquire the field spectra.

9.8.5.3 Install the cell in the beam if necessary and flush it with dry nitrogen.

9.8.5.4 Acquire a spectrum.

9.8.5.5 Flow the reference gas through the cell so that at least five volumes of the cell pass through it.

9.8.5.6 Acquire a second spectrum with the reference gas flowing.

9.8.5.7 Flush the cell with dry nitrogen again and acquire a third spectrum.

9.8.5.8 Analyze all three spectra for the target gas by using the same background as used for the field spectra.

9.8.5.9 Find the concentration of the reference gas from the result of analyzing the second spectrum minus the average value of the first and third spectra.

9.8.5.10 Repeat Sections 9.8.5.3 through 9.8.5.9 five times in any one day of operation.

9.8.5.11 Determine the percent accuracy as the average value of the five measurements divided by the known concentration of the reference cell times 100.

9.9 The Measurement of Resolution

9.9.1 Purpose. The purpose of this procedure is to provide the operator with a means for measuring the resolution of the FT-IR instrument.

9.9.2 Assumptions. The spectra used to make this determination have been acquired with the same instrumental parameters as those used for the field spectra. Particularly, the apodization function and the path length must be the same.

9.9.3 Additional Sections Referenced. No other sections are referenced.

9.9.4 Methodology. The resolution of the FT-IR is an important parameter in that it determines the specificity of the measurements. The instrument resolution does not exhibit dramatic changes from day to day and needs to be measured infrequently. However, whenever any change is made to the instrument optics, including the light source, the resolution must be remeasured. The resolution can also change when the path length changes if the instrument does not have an appropriate field stop to clearly define the field of view regardless of the optical path length. If that is the case, the resolution should be measured at whatever path lengths are used. The FT-IR resolution is also dependent on the apodization function that is used when single beam spectra are created from interferograms, and if more than one apodization function is used then the resolution should be measured for each. The operator needs to be aware of the instrument resolution for a number of reasons. The spectra from two instruments cannot be compared if the resolutions are not the same. The use of reference spectra at resolutions different from that of the instrument creates problems with accuracy. Subtracting one spectrum from another with different resolutions is also a problem. The manufacturers of these devices list the nominal resolution, but a listed resolution of, for example, 1 cm^{-1} should not be interpreted as an exact number.

To measure the resolution, an absorption spectrum must be used. An absorption line that is narrow in comparison to the instrument's line function must be used, and the spectral line used must be a single line. If changes in the instrument resolution occur, they should be noticeable in the high-wave-number region first.

Six primary atmospheric constituents are present in every spectrum. They are water vapor, methane, carbon dioxide, nitrous oxide, ozone, and carbon monoxide. Of these, only the absorption features of water vapor and carbon monoxide can be used to measure the instrument resolution. If the path length is great enough and the water vapor concentration is large enough, then the atmospheric constituent deuterated water can also be used.

In addition to these, absorption features from other gases in high concentrations in conjunction with a short cell can be used. The important feature of any line that is selected for resolution measurements is that it be a single line and be narrow compared to the instrument's nominal operating resolution. Thus methane cannot be used because the lines are not single lines. Whatever feature is chosen, it must not be impacted by any interfering species, as this has the same effect as having double lines. The absorption features of ammonia or hydrogen chloride can be used. HCl is actually a good choice because it absorbs in the high-wave-number region. However, it is not generally present in high enough quantities in the atmosphere to be measured in every spectrum.

There are a number of lines that can be used in the water vapor spectrum that can be used for this measurement. They are at the wave numbers 1014.2, 1149.46, 1187.02, and 2911.88. It should be noted that many of the water lines are already saturated as far as the instrument response is concerned at a vapor pressure of 3 torr. So any line used must be checked to make sure it is not saturated. For carbon monoxide there is at least one line at 2168.9 that can be used. These lines should easily be observed in spectra that have been taken with path lengths greater than 100 m (total).

The resolution for the FT-IR is defined as the full width at half maximum (FWHM) for either of the these lines. Thus to determine the instrument's resolution, an absorbance spectrum must be created with a synthetic background. The operator needs to have a large number of data points across the line in order to make this measurement, and it should be remembered that the system takes only two data points per nominal resolution element. The best way to create this absorption spectrum is to record an interferogram and then zero fill by at least a factor of 4 before computing the Fourier transform. If that is not possible, then the absorbance spectrum must be interpolated to increase the number of data points.

The absorbance at the peak must be measured, and any non-zero baseline value must be subtracted from that measurement. The result of this subtraction is the peak height. Then the entire width of the line at one-half the peak absorbance is measured in wave numbers. This is the required measure of the resolution of the instrument.

9.9.5 Procedure.

9.9.5.1 Obtain an interferogram with the FT-IR operating at the same path length as will be used for the acquisition of the field spectra.

9.9.5.2 Zero fill the interferogram by at least a factor of 4.

9.9.5.3 Perform the Fourier transform on the interferogram.

9.9.5.4 Create an absorbance spectrum using a synthetic background.

9.9.5.5 Isolate one of the lines and measure the peak height.

9.9.5.6 Subtract any non-zero baseline measurement.

9.9.5.7 Measure the full width of the line at one half the absorbance measured in Section 9.9.5.6. This is the resolution.

9.10 The Determination of Nonlinear Instrument Response

9.10.1 Purpose. The FT-IR instrument can respond nonlinearly to changes in the light intensity for several reasons. There are two instrumental conditions that must be guarded against, and these are discussed here. The first is that the electrical gain is set too high, and this can cause the analog-to-digital (A/D) converter to be saturated. The second is that the light source itself is too intense, and this causes the detector response to become nonlinear. This procedure is intended to give the operator a means for determining when either of these conditions exist.

9.10.2 Assumptions. The instrument is operating under the same conditions as it will be to acquire the field spectra.

9.10.3 Additional Sections Referenced. No other sections are referenced.

9.10.4 Methodology. A nonlinear response can be caused by excessive source intensity or amplifier gain. All of the FT-IR systems that are used for remote sensing use A/D converters to convert the analog detector signal to a digitized form. Most use either a 16 bit or an 18 bit converter, and that defines the range of voltages that can be monitored. If the source intensity and amplifier gain combination is too high, then the A/D converter can be saturated. This manifests itself as a sudden drop in the signal being recorded when the source or the retroreflector is moved closer to the detector. When this happens, the system gain must be lowered, if that possibility exists, or the path length must be changed.

The second type of nonlinear response is somewhat more difficult to determine. This occurs if too much light falls on the detector. The detector converts the incident light photons to an electrical signal. There is a limit for how many photons can be converted to electrons, and when this limit is exceeded the detector response becomes nonlinear.

There may also be a nonlinear response from the fact that HgCdTe detectors exhibit nonlinear behavior in their response to infrared energy. This circumstance is not covered here and should be corrected by the manufacturer.

In everyday operation, the easiest way to detect the second kind of nonlinearity is to examine the portion of the single beam spectrum at wave numbers below the detector cutoff. This is in the 650–680-cm^{-1} region for most HgCdTe detectors. If a dip below zero occurs in that region or if the signal is above zero at wave numbers below that region, the system's response may be nonlinear.

There are two ways to check the system's response. Both involve the use of screens to diminish the light intensity while the response is being viewed. If the screens have meshes that reduce the intensity by known amounts, the response should be diminished by that amount also. If the instrument responds differently, the system is nonlinear.

Wire screens can be purchased in a number of mesh sizes, and the mesh size determines how much light will get blocked. Plastic screens should not be used because they may exhibit selective absorption. Aluminum screening that is used for window screening is satisfactory but may not reduce the intensity enough. It is best to use screens of different mesh when using the procedure described below rather than two layers of screening with the same mesh.

The following procedure needs to be done only if the operator suspects that the system is operating in a nonlinear way.

9.10.5 Procedure.

9.10.5.1 Set the FT-IR system up as it will be used for acquisition of the field spectra.

9.10.5.2 Move the source or the retroreflector to twice the original distance.

9.10.5.3 Examine the signal. If a sudden increase in the signal strength occurs, then the A/D converter is saturated.

9.10.5.4 With the source on and the retroreflector at the distance used for the field spectra, acquire a single beam field spectrum and examine the intensity in the detector cutoff region. If a dip occurs, the detector may be saturated.

9.10.5.5 If the dip that is described in Section 9.10.5.4 occurs, insert a wire screen in the beam so that it covers the entire beam and record the signal level.

9.10.5.6 Insert a second screen in the beam and record the signal again. If the screens are the same, each should diminish the beam in the same ratio. If that does not happen, the system is nonlinear in response and the infrared energy must be decreased by some means such as increasing the path length, closing the iris in the instrument, etc.

9.11 The Determination of Water Vapor Concentration

9.11.1 Purpose. It is suggested that the water vapor content in the atmosphere be monitored independently of the FT-IR measurements. This is not an individual procedure like the preceding portions of this method in that it does not explain the siting criteria for making water vapor measurements. It is rather a discussion as to why the measurement is important.

9.11.2 Assumptions. There are no assumptions about the FT-IR system associated with this process.

9.11.3 Additional Sections Referenced. No other sections are referenced.

9.11.4 Methodology. Absorption due to water vapor is the predominant feature in the spectra acquired by the FT-IR remote sensor. It also seems to be one of the most difficult compounds to deal with in the analysis. There are measurable changes in the observed water vapor from spectrum to spectrum. Data from a local airport weather service is not satisfactory to understand the changes and their effects on the analysis. Large and abrupt changes in the water vapor content can be expected. When that occurs it is likely that the background spectrum and the water vapor reference spectrum will have to be remade. But the only way to know that these changes have occurred is to measure the water independently.

Some argument can be made that the water vapor concentration can be obtained by simply adding water to the list of analyzed gases. However, it is not simple to make that measurement. Many of the water vapor lines are very strongly absorbing when the vapor pressure is 3 or 4 torr. The atmospheric vapor pressure in most areas is at least 5 times higher than that. That makes line selection for analysis quite problematic.

Since the water vapor can easily be measured in a continuous fashion it seems prudent to make the measurement independently of the FT-IR. One post-analysis check of the data is to look for a correlation between the concentrations of the target gas and water vapor. To accomplish that, the operator must determine what the water vapor concentration is. The following discussion describes a way of doing that.

The water vapor concentration can be obtained by measuring the relative humidity and the ambient temperature. These values, along with the Smithsonian psychrometric tables, are then used to calculate the water vapor concentration. The psychrometric tables can be found in the *Handbook of Chemistry and Physics* (14), which is published yearly.

There are solid-state devices available today that allow reliable measurements of the relative humidity and the ambient temperature. These devices give results to within a few percent of relative humidity and a few tenths of a degree for the temperature. The operator will need a way to record the output from these devices. This can be accomplished with a data logger that allows for multichannel, multiday recording.

The sensors can be placed anywhere along the path but must be shielded from the sun. A complete description of how to configure the placement of these devices is well outside the scope of this document. For a complete discussion of these measurements, the operator should consult the following document: *Quality Assurance Handbook for Air Pollution Measurements, Volume IV—Meteorological Measurements* (15). Once the water vapor concentration is known, it should be plotted as a function of time and then compared with the target gas concentration as discussed in the procedure for post-analysis data checking (see Section 8.10). The operator should pay particular attention to the periods where abrupt changes in the water vapor occur.

10. References

1. Russwurm, G. M., and Childers, J.W., *FT-IR Open-Path Monitoring Guidance Document*, U. S. Environmental Protection Agency, Research Triangle Park, NC, EPA/600/R-96/040, April 1996.

2. Pfeiffer, H. G., and Liebhafsky, H. A., “The Origins of Beer's Law,” *J. Chem. Educ.*, Vol. 28:123-125, 1951.

3. Lothian, G. F., “Beer's Law and Its Use in Analysis,” *Analyst*, Vol. 88:678, 1963.

4. Champeney, D. C., *Fourier Transforms and Their Physical Applications*, Academic Press, London, 1973.

5. Nicolet Analytical Instruments, *FT-IR Theory*, Nicolet Analytical Instruments, Madison, WI, 1986.
6. Griffiths, P. R., and deHaseth, J. A., *Fourier Transform Infrared Spectrometry*, John Wiley and Sons, New York, 1986.

7. Halliday, D., and Resnick, R. *Fundamentals of Physics*, Wiley and Sons, New York, 1974.

8. Stone, J. M., *Radiation and Optics*, McGraw-Hill, New York, 1963.

9. Tolansky, S., *An Introduction to Interferometry*, John Wiley and Sons, New York, 1962.

10. Calvert, J. G., "Glossary of Atmospheric Chemistry Terms (Recommendations 1990)," *Pure Appl. Chem.*, Vol. 62(11):2167-2219, 1990.

11. Long, G. L., and Winefordner, J. D., “Limit of Detection: A Closer Look at the IUPAC Definition,” *Anal. Chem.*, Vol. 55(7):712A-724A, 1983.

12. Rennilson, J. J., “Retroreflection Measurements: A Review,” *Appl. Opt.*, Vol. 19:1234, 1980.

13. Haaland, D. M., and Easterling, R. G., "Application of New Least-Squares Methods for the Quantitative Infrared Analysis of Multicomponent Samples," *Appl. Spectrosc.*, 36(6):665-673, 1982.

14. *Handbook of Chemistry and Physics*, CRC Press, Cleveland, OH.

15. *Quality Assurance Handbook for Air Pollution Measures, Volume IV—Meteorological Measurements*, U. S. Environmental Protection Agency, EPA-600/R-94-038b, Research Triangle Park, NC, May 1994.

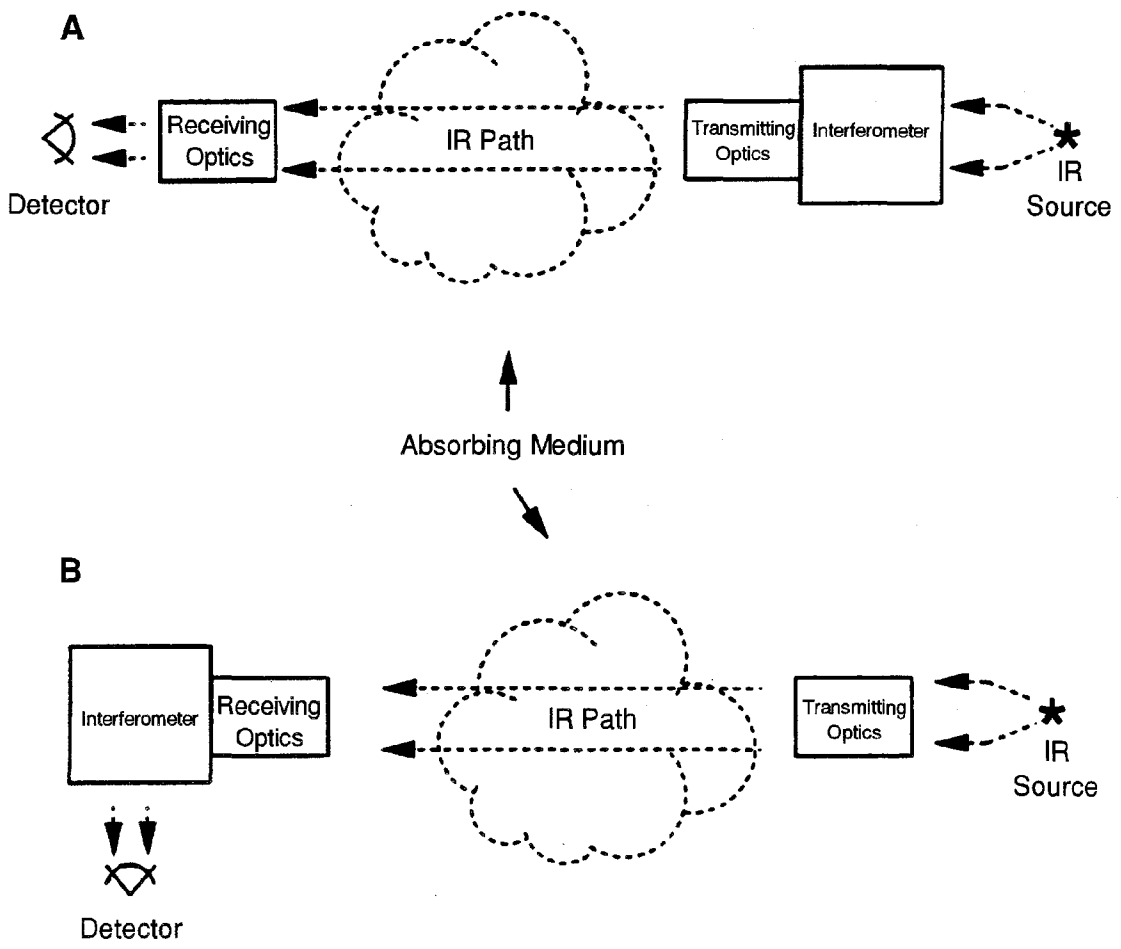

Figure 1. The bistatic configuration of an FT-IR system.

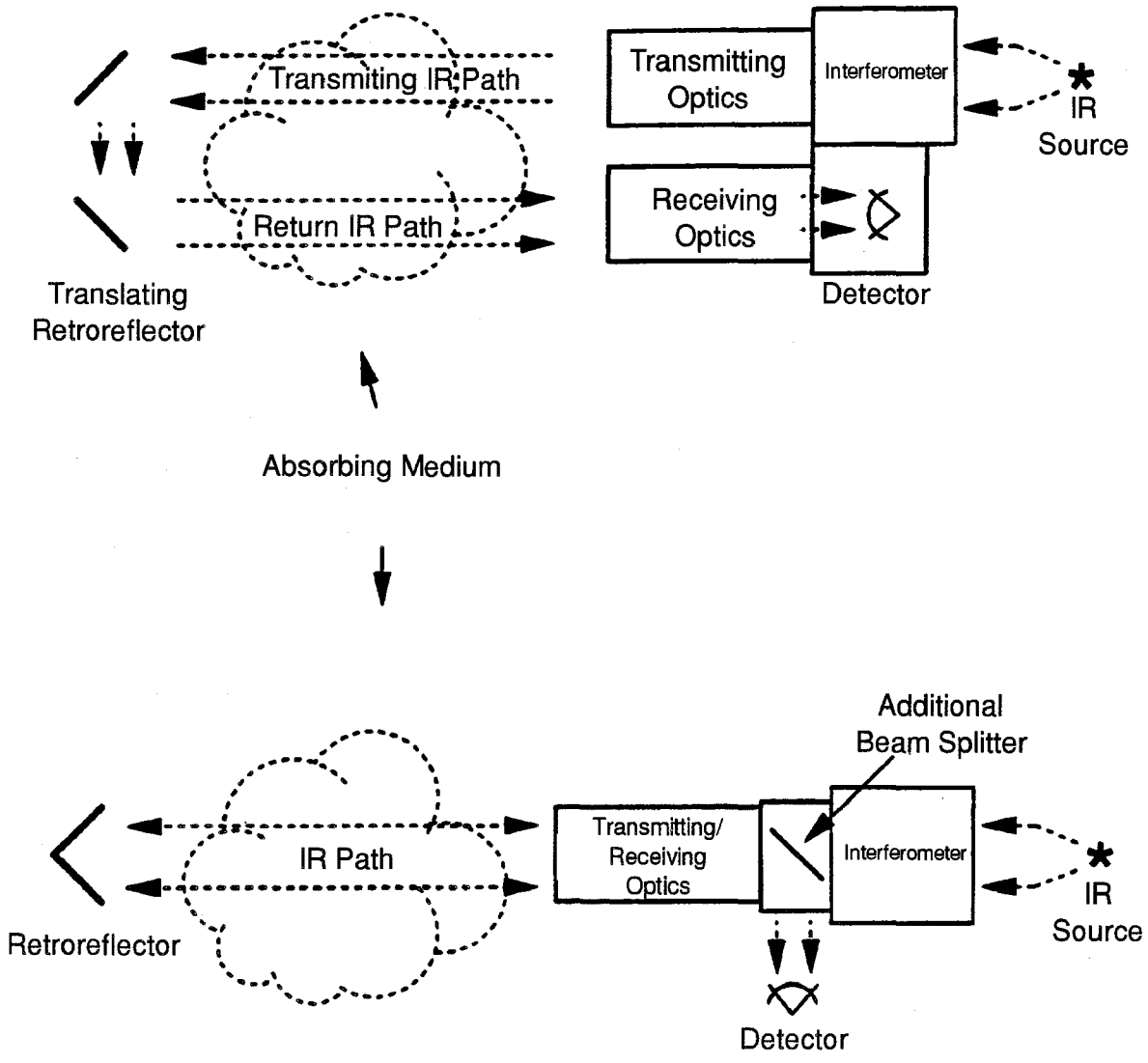

Figure 2. The monostatic configuration of an FT-IR system.

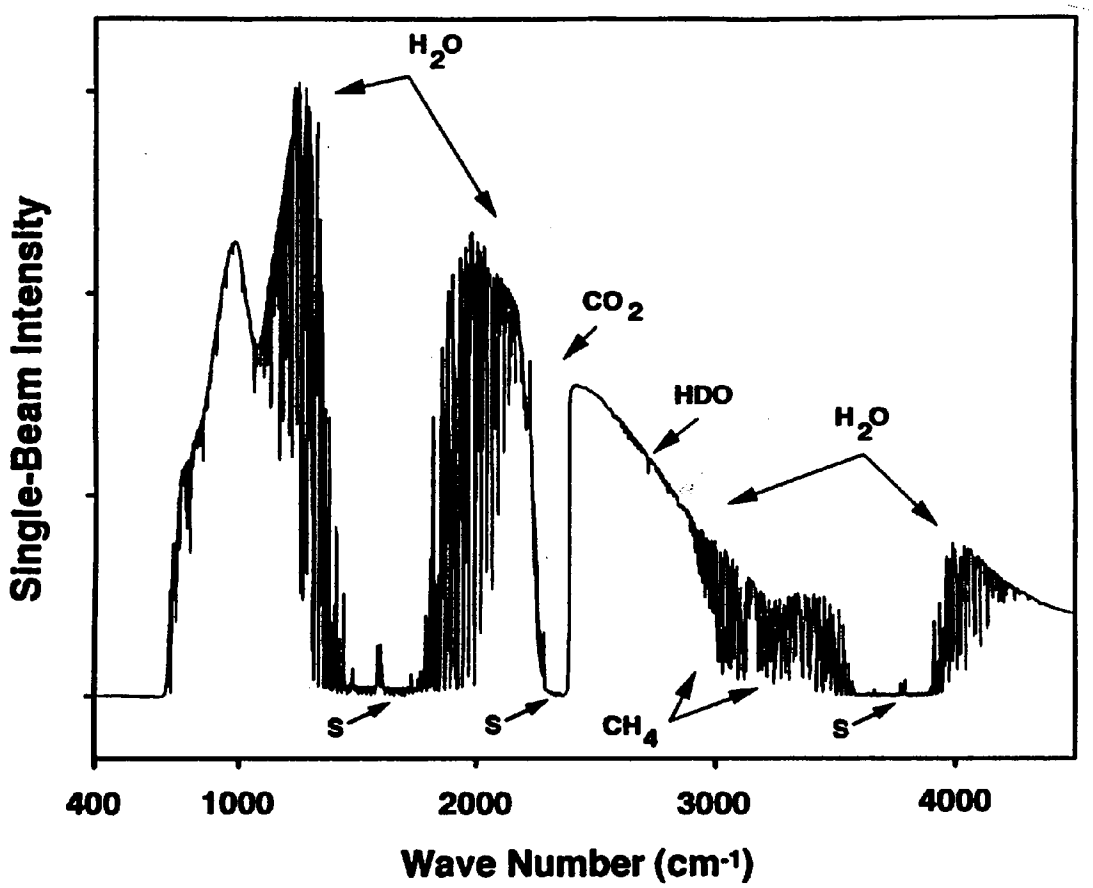

Figure 3. Single-beam spectrum acquired by using a monostatic system and a 414-m path.
[Note: S indicates stray light.]

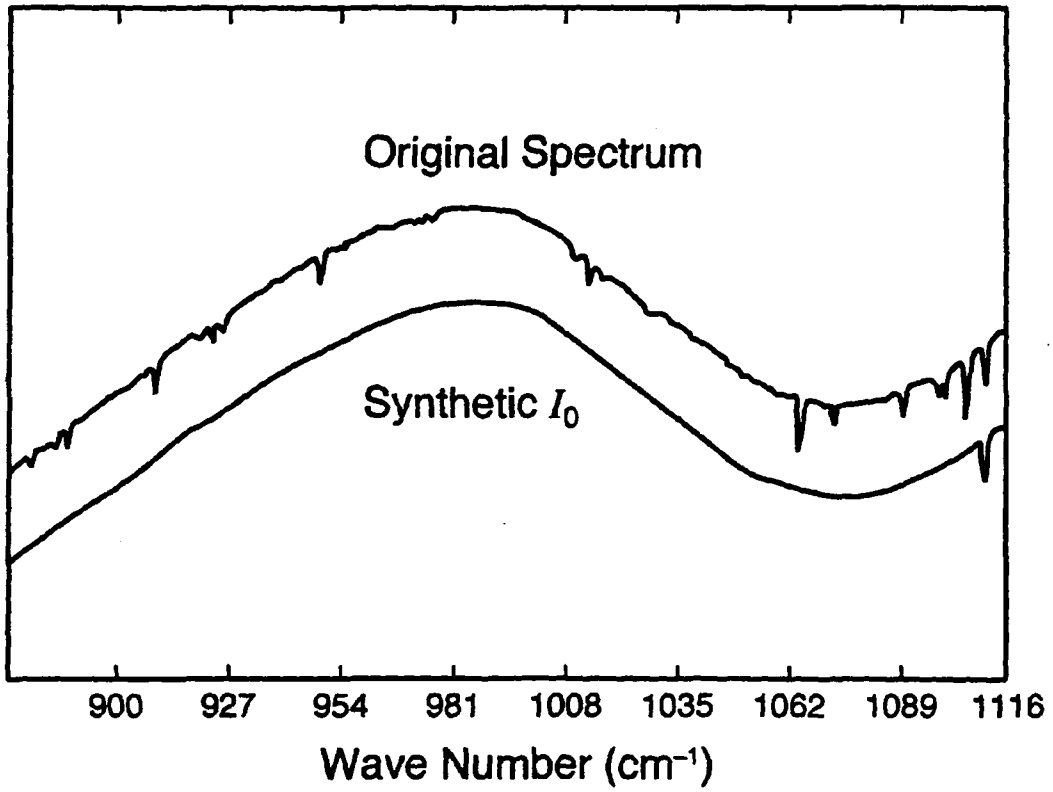

Figure 4. Synthetic I_0 spectrum for an FT-IR absorbance.
[Note: The peak at 1110 cm^{-1} has intentionally been left in as a fiducial point.]

EPA/625/R-96/010b

Compendium of Methods for the Determination of Toxic Organic Compounds in Ambient Air

Second Edition

Compendium Method TO-17

Determination of Volatile Organic Compounds in Ambient Air Using Active Sampling Onto Sorbent Tubes

Center for Environmental Research Information
Office of Research and Development
U.S. Environmental Protection Agency
Cincinnati, OH 45268

January 1999

Method TO-17
Acknowledgements

This Method was prepared for publication in the *Compendium of Methods for the Determination of Toxic Organic Compounds in Ambient Air, Second Edition* (EPA/625/R-96/010b), which was prepared under Contract No. 68-C3-0315, WA No. 3-10, by Midwest Research Institute (MRI), as a subcontractor to Eastern Research Group, Inc. (ERG), and under the sponsorship of the U. S. Environmental Protection Agency (EPA). Justice A. Manning, John O. Burckle, and Scott Hedges, Center for Environmental Research Information (CERI), and Frank F. McElroy, National Exposure Research Laboratory (NERL), all in the EPA Office of Research and Development, were responsible for overseeing the preparation of this method. Additional support was provided by other members of the Compendia Workgroup, which include:

- John O. Burckle, U.S. EPA, ORD, Cincinnati, OH
- James L. Cheney, Corps of Engineers, Omaha, NB
- Michael Davis, U.S. EPA, Region 7, KC, KS
- Joseph B. Elkins Jr., U.S. EPA, OAQPS, RTP, NC
- Robert G. Lewis, U.S. EPA, NERL, RTP, NC
- Justice A. Manning, U.S. EPA, ORD, Cincinnati, OH
- William A. McClenny, U.S. EPA, NERL, RTP, NC
- Frank F. McElroy, U.S. EPA, NERL, RTP, NC
- Heidi Schultz, ERG, Lexington, MA
- William T. "Jerry" Winberry, Jr., EnviroTech Solutions, Cary, NC

This Method is the result of the efforts of many individuals. Gratitude goes to each person involved in the preparation and review of this methodology.

Author(s)
- Elizabeth A. Woolfenden, Perkin Elmer Corp., Wilton, CT
- William A. McClenny, U.S. EPA, NERL, RTP, NC

Peer Reviewers
- Joan T. Bursey, ERG, Morrisville, NC
- Martin Harper, SKC Inc., Eighty-Four, PA
- Irene D. DeGraff, Supelco, Inc., Bellefonte, PA
- Joseph E. Bumgarner, U. S. EPA, NERL, RTP, NC
- Lauren Drees, U.S. EPA, NRMRL, Cincinnati, OH

Finally, recognition is given to Frances Beyer, Lynn Kaufman, Debbie Bond, Cathy Whitaker, and Kathy Johnson of Midwest Research Institute's Administrative Services staff whose dedication and persistence during the development of this manuscript has enabled it's production.

DISCLAIMER

This Compendium has been subjected to the Agency's peer and administrative review, and it has been approved for publication as an EPA document. Mention of trade names or commercial products does not constitute endorsement or recommendation for use.

METHOD TO-17

Determination of Volatile Organic Compounds in Ambient Air Using Active Sampling Onto Sorbent Tubes

TABLE OF CONTENTS

Page

1. Scope 17-1

2. Summary of Method 17-2

3. Significance 17-3

4. Applicable Documents 17-4
   4.1 ASTM Standards 17-4
   4.2 EPA Documents 17-4
   4.3 Other Documents 17-4

5. Definitions 17-5

6. Overview of Methodology 17-6
   6.1 Selection of Tube and Sorbent 17-7
   6.2 Conditioning the Tube 17-7
   6.3 Sampling Apparatus 17-7
   6.4 Sampling Rates 17-7
   6.5 Preparing for Sample Collection 17-8
   6.6 Set the Flow Rates 17-8
   6.7 Sample and Recheck Flow Rates 17-8
   6.8 Reseal the Tubes 17-8
   6.9 Selection of Thermal Desorption System 17-8
   6.10 Dry Purge the Tubes and Prepare for Thermal Desorption 17-9
   6.11 Check for System Integrity 17-9
   6.12 Repurge of Tube on the Thermal Desorber/Addition of Internal Standard 17-9
   6.13 Thermally Desorb the Packing 17-9
   6.14 Trap Desorption and GC/MS Analysis 17-9
   6.15 Restoring the Tubes and Determine Compliance with Performance Standards 17-9
   6.16 Record and Store Data 17-10

7. Interferences and Limitations 17-10
   7.1 Interference from Sorbent Artifacts 17-10
   7.2 Minimizing Interference from Water 17-11
   7.3 Atmospheric Pollutants not Suitable for Analysis by this Method 17-12
   7.4 Detection Limits and Maximum Quantifiable Concentrations of Air Pollutants 17-12
   7.5 Suitable Atmospheric Conditions 17-12

TABLE OF CONTENTS (continued)

Page

8. Apparatus Selection and Preparation 17-13
   8.1 Sample Collection 17-13
   8.2 Apparatus 17-14
   8.3 Tube Conditioning Apparatus 17-15

9. Reagents and Materials 17-16
   9.1 Sorbent Selection Guidelines 17-16
   9.2 Gas Phase Standards 17-17
   9.3 Liquid Standards 17-17
   9.4 Gas Phase Internal Standards 17-19
   9.5 Commercial, Preloaded Standard Tubes 17-19
   9.6 Carrier Gases 17-19

10. Guidance on Sampling and Related Procedures 17-20
   10.1 Packing Sorbent Tubes 17-20
   10.2 Conditioning and Storage of Blank Sorbent Tubes 17-21
   10.3 Record Keeping Procedures for Sorbent Tubes 17-21
   10.4 Pump Calibration and Tube Connection 17-22
   10.5 Locating and Protecting the Sample Tube 17-22
   10.6 Selection of Pump Flow Rates and Air Sample Volumes 17-22
   10.7 Sampling Procedure Verification - Use of Blanks, Distributed Volume Pairs, BackUp Tubes, and Distributed Volume Sets 17-23
   10.8 Determining and Validating Safe Sampling Volumes (SSV) 17-24
   10.9 Resealing Sorbent Tubes After Sample Collection 17-25
   10.10 Sample Storage 17-25

11. Analytical Procedure 17-25
   11.1 Preparation for Sample Analysis 17-25
   11.2 Predesorption System Checks and Procedures 17-25
   11.3 Analytical Procedure 17-26

12. Calibration of Response 17-27

13. Quality Assurance 17-27
   13.1 Validating the Sample Collection Procedure 17-27
   13.2 Performance Criteria for the Monitoring Pump 17-28

14. Performance Criteria for the Solid Adsorbent Sampling of Ambient Air 17-28
   14.1 Introduction 17-28
   14.2 Method Detection Limit 17-28
   14.3 Analytical Precision of Duplicate Pairs 17-29
   14.4 Precision for the Distributed Volume Pair 17-29
   14.5 Audit Accuracy 17-29

15. References 17-30

METHOD TO-17

Determination of Volatile Organic Compounds in Ambient Air Using Active Sampling Onto Sorbent Tubes

1. Scope

1.1 This document describes a sorbent tube/thermal desorption/gas chromatographic-based monitoring method for volatile organic compounds (VOCs) in ambient air at 0.5 to 25 parts per billion (ppbv) concentration levels. Performance criteria are provided as part of the method in Section 14. EPA has previously published Compendium Method TO-1 describing the use of the porous polymer Tenax® GC for sampling nonpolar VOCs and Compendium Method TO-2 describing the use of carbon molecular sieve for highly volatile, nonpolar organics (1). Since these methods were developed, a new generation of thermal desorption systems as well as new types of solid adsorbents have become available commercially. These sorbents are used singly or in multisorbent packings. Tubes with more than one sorbent, packed in order of increasing sorbent strength are used to facilitate quantitative retention and desorption of VOCs over a wide volatility range. The higher molecular weight compounds are retained on the front, least retentive sorbent; the more volatile compounds are retained farther into the packing on a stronger adsorbent. The higher molecular weight compounds never encounter the stronger adsorbents, thereby improving the efficiency of the thermal desorption process.

1.2 A large amount of data on solid adsorbents is available through the efforts of the Health and Safety Laboratory, Health and Safety Executive (HSE), Sheffield, United Kingdon (UK). This group has provided written methods for use of solid adsorbent packings in monitoring workplace air. Some of their documents on the subject are referenced in Section 2.2. Also, a table of information on safe sampling volumes from their research is provided in Appendix 1.

1.3 EPA has developed data on the use of solid sorbents in multisorbent tubes for concentration of VOCs from the ambient air as part of its program for methods development of automated gas chromatographs. The experiments required to validate the use of these sorbent traps include capture and release efficiency studies for given sampling volumes. These studies establish the validity of using solid adsorbents for target sets of VOCs with minimal (at most one hour) storage time. Although questions related to handling, transport and storage of samples between the times of sampling and analysis are not addressed, these studies provide information on safe sampling volumes. Appendix 2 delineates the results of sampling a mixture of humidified zero air and the target VOCs specified in the Compendium Method TO-14 (2) using a specific multisorbent.

1.4 An EPA workshop was convened in November of 1995 to determine if a consensus could be reached on the use of solid sorbent tubes for ambient air analysis. The draft method available at the workshop has evolved through several reviews and modifications into the current document. The method is supported by data reported in the scientific literature as cited in the text, and by recent experimental tests performed as a consequence of the workshop (see Table 1).

1.5 The analytical approach using gas chromatography/mass spectroscopy (GC/MS) is identical to that mentioned in Compendium Method TO-15 and, as noted later, is adapted for this method once the sample has been thermally desorbed from the adsorption tube onto the focusing trap of the analytical system.

1.6 Performance criteria are given in Section 14 to allow acceptance of data obtained with any of the many variations of sampling and analytical approaches.

2. Summary of Method

2.1 The monitoring procedure involves pulling a volume of air through a sorbent packing to collect VOCs followed by a thermal desorption-capillary GC/MS analytical procedure.

2.2 Conventional detectors are considered alternatives for analysis subject to the performance criteria listed in Section 14 but are not covered specifically in this method text.

2.3 Key steps of this method are listed below.

2.3.1 Selection of a sorbent or sorbent mix tailored for a target compound list, data quality objectives and sampling environment.

2.3.2 Screening the sampling location for VOCs by taking single tube samples to allow estimates of the nature and amount of sample gases.

2.3.3 Initial sampling sequences with two tubes at nominally 1 and 4 liter total sample volumes (or appropriate proportional scaling of these volumes to fit the target list and monitoring objectives).

2.3.4 Analysis of the samples and comparison to performance criteria.

2.3.5 Acceptance or rejection of the data.

2.3.6 If rejection, then review of the experimental arrangement including repeat analysis or repeat analysis with backup tubes and/or other QC features.

[Note: EPA requires the use of distributed volume pairs (see Section14.4) for monitoring to insure high quality data. However, in situations where acceptable data have been routinely obtained through use of distributed volume pairs and the ambient air is considered well characterized, cost considerations may warrant single tube sampling. Any attendant risk to data quality objectives is the responsibility of the project's decision maker.]

2.4 Key steps in sample analysis are listed below.

2.4.1 Dry purge of the sorbent tube with dry, inert gas before analysis to remove water vapor and air. The sorbent tube can be held at temperatures above ambient for the dry purge.

2.4.2 Thermal desorption of the sorbent tube (primary desorption).

2.4.3 Analyte refocusing on a secondary trap.

2.4.4 Rapid desorption of the trap and injection/transfer of target analytes into the gas chromatograph (secondary desorption).

2.4.5 Separation of compounds by high resolution capillary gas chromatography (GC).

2.4.6 Measurement by mass spectrometry (MS) or conventional GC detectors (only the MS approach is explicitly referred to in Compendium Method TO-17; an FID/ECD detector combination or other GC detector can be used if Section 14 criteria are met. However, no explicit QA guidelines are given here for those alternatives).

2.5 The target compound list (TCL) is the same as listed in Compendium Method TO-15 (i.e., subsets of the 97 VOCs listed as hazardous pollutants in Title III of the Clean Air Act Amendments of 1990). Only a portion of these compounds has been monitored by the use of solid adsorbents. This method provides performance criteria to demonstrate acceptable performance of the method (or modifications of the method) for monitoring a given compound or set of compounds.

3. Significance

3.1 This method is an alternative to the canister-based sampling and analysis methods that are presented in Compendium Methods TO-14 and TO-15 and to the previous sorbent-based methods that were formalized as Compendium Methods TO-1 and TO-2. All of these methods are of the type that include sampling at one location, storage and transport of the sample, and analysis at another, typically more favorable site.

3.2 The collection of VOCs in ambient air samples by passage through solid sorbent packings is generally recognized to have a number of advantages for monitoring. These include the following:

- The small size and light weight of the sorbent packing and attendant equipment.
- The placement of the sorbent packing as the first element (with the possible exception of a filter or chemical scrubber for ozone) in the sampling train so as to reduce the possibility of contamination from upstream elements.
- The availability of a large selection of sorbents to match the target set of compounds including polar VOC.
- The commercial availability of thermal desorption systems to release the sample from the sorbent and into the analytical system.
- The possibility of water management using a combination of hydrophobic sorbents (to cause water breakthrough while sampling); dry gas purge of water from the sorbent after sampling; and splitting of the sample during analysis.
- The large amount of literature on the use of sorbent sampling and thermal desorption for monitoring of workplace air, particularly the literature from the Health and Safety Executive in the United Kingdom.

3.3 Accurate risk assessment of human and ecological exposure to toxic VOCs is an important goal of the U. S. Environmental Protection Agency (EPA) with increased emphasis on their role as endocrine disrupters. Accurate data is fundamental to reaching this goal. The portability and small size of typical sampling packages for sorbent-based sampling and the wide range of sorbent choices make this monitoring approach appealing for special monitoring studies of human exposure to toxic gases and to use in network monitoring to establish prevalence and trends of toxic gases. Microenvironmental and human subject studies are typical of applications for Compendium Method TO-17.

3.4 Sorbent-based monitoring can be combined with canister-based monitoring methods, on-site autoGC systems, open path instrumentation, and other specialized point monitoring instruments to address most monitoring needs for volatile organic gases. More than one of these approaches can be used simultaneously as a means to check and insure the quality of the data being produced.

3.5 In the form specified in Compendium Method TO-17, sorbent sampling incorporates the distributed volume pair approach that provides inherently defensible data to counter questions of sample integrity, operator performance, equipment malfunction during sampling, and any other characteristic of sample collection that is not linear with sampling volume.

3.6 In keeping with the consensus of EPA scientists and science advisors, the method is performance-based such that performance criteria are provided. Any modification of the sorbent approach to monitoring for VOCs can be used provided these criteria are met.

4. Applicable Documents

4.1 ASTM Standards

- Method D1356 *Definition of Terms Relating to Atmospheric Sampling and Analysis*
- Method E260 *Recommended Practice for General Gas Chromatography*
- Method E355 *Practice for Gas Chromatography Terms and Relationships*

4.2 EPA Documents

- *Technical Assistance Document for Sampling and Analysis Toxic Organic Compounds in Ambient Air*, U. S. Environmental Protection Agency, EPA-600/4-83-027, June 1983.
- *Quality Assurance Handbook for Air Pollution Measurement Systems*, U. S. Environmental Protection Agency, EPA-600/R-94-038b, May 1994.
- *Compendium of Methods for the Determination of Toxic Organic Compounds in Ambient Air: Methods TO-1 and TO-2*, U. S. Environmental Protection Agency, EPA 600/4-84-041, April 1984.
- *Compendium of Methods for the Determination of Toxic Organic Compounds in Ambient Air: Method TO-14, Second Supplement*, U. S. Environmental Protection Agency, EPA 600/4-89-018, March 1989.
- *Compendium of Methods for the Determination of Toxic Organic Compounds in Ambient Air: Method TO-15*, U. S. Environmental Protection Agency, EPA 625/R-96-010b, January 1997.

4.3 Other Documents

- MDHS 3 - Generation of Test Atmospheres of Organic Vapors by the Syringe Injection Technique, *Methods for the Determination of Hazardous Substances (MDHS)*, Health and Safety Laboratory, Health and Safety Executive, Sheffield, UK.
- MDHS 4 - Generation of Test Atmospheres of Organic Vapors by the Permeation Tube Method, *Methods for the Determination of Hazardous Substances (MDHS)*, Health and Safety Laboratory, Health and Safety Executive, Sheffield, UK.
- MDHS 72 - Volatile Organic Compounds in Air, *Methods for the Determination of Hazardous Substances (MDHS)*, Health and Safety Laboratory, Health and Safety Executive, Sheffield, UK.
- TAD - *Technical Assistance Document (TAD) on the Use of Solid Sorbent-based Systems for Ambient Air Monitoring*, Perkin Elmer Corp., 50 Danbury Rd., Wilton, CT 06897, USA.

5. Definitions

[Note: Definitions used in this document and any user-prepared Standard Operating Procedures (SOPs) should be consistent with those used in ASTM D1356. All abbreviations and symbols are defined within this document at the point of first use.]

5.1 Thermal Desorption-the use of heat and a flow of inert (carrier) gas to extract volatiles from a solid or liquid matrix directly into the carrier gas and transfer them to downstream system elements such as the analytical column of a GC. No solvent is required.

5.2 Two-stage Thermal Desorption-the process of thermally desorbing analytes from a solid or liquid matrix, reconcentrating them on a focusing tube and then rapidly heating the tube to **?**inject" the concentrated compounds into the GC system in a narrow band of vapor compatible with high resolution capillary gas chromatography.

5.3 Sorbent Tube (Also referred to as 'tube' and 'sample tube')-stainless steel, glass or glass lined (or fused silica lined) stainless steel tube, typically 1/4 inch (6 mm) O.D. and of various lengths, with the central portion packed with greater than 200 mg of solid adsorbent material, depending on density and packing bed length. Used to concentrate VOCs from air.

5.4 Focusing Tube-narrow (typically <3mm I.D.) tube containing a small bed of sorbent, which is maintained near or below ambient temperature and used to refocus analytes thermally desorbed from the sorbent tube. Once all the VOCs have been transferred from the sorbent tube to the focusing tube, the focusing tube is heated very rapidly to transfer the analytes into the capillary GC analytical column in a narrow band of vapor.

5.5 Cryogen (Also referred to as 'cryogenic fluid')-typically liquid nitrogen, liquid argon, or liquid carbon dioxide. In the present context, cryogens are used in some thermal desorption systems to cool the focusing tube.

5.6 High Resolution Capillary Column Chromatography-conventionally describes fused silica capillary columns with an internal diameter of 320 µm or below and with a stationary phase film thickness of 5 µm or less.

5.7 Breakthrough Volume (BV)-volume of air containing a constant concentration of analyte which may be passed through a sorbent tube before a detectable level (typically 5%) of the analyte concentration elutes from the nonsampling end. Alternatively, the volume sampled when the amount of analyte collected in a back-up sorbent tube reaches a certain percentage (typically 5%) of the total amount collected by both sorbent tubes. These methods do not give identical results. For purposes in the document the former definition will be used.

5.8 Retention Volume (RV)-the volume of carrier gas required to move an analyte vapor plug through the short packed column which is the sorbent tube. The volume is determined by measuring the carrier gas volume necessary to elute the vapor plug through the tube, normally measured at the peak response as the plug exits the tube. The retention volume of methane is subtracted to account for dead volume in the tube.

5.9 Safe Sampling Volume (SSV)-usually calculated by halving the retention volume (indirect method) or taking two-thirds of the breakthrough volume (direct method), although these two approaches do not necessarily give identical results. The latter definition is used in this document.

5.10 Sorbent Strength—term used to describe the affinity of sorbents for VOC analytes. A stronger sorbent is one which offers greater safe sampling volumes for most/all VOC analytes relative to another, weaker sorbent. Generally speaking, sorbent strength is related to surface area, though there are exceptions to this. The SSVs of most, if not all, VOCs will be greater on a sorbent with surface area **?**10n" than on one with a surface area of **?**n". As a general rule, sorbents are described as **?**weak" if their surface area is less than 50 m^2g^{-1} (includes Tenax®, Carbopack™/trap C, and Anasorb® GCB2), **?**medium strength" if the surface area is in the range 100-500 m^2g^{-1} (includes Carbopack™/trap B, Anasorb® GCBI and all the Porapaks and Chromosorbs listed in Tables 1 and 2) and **?**strong" if the surface area is around 1000 m^2g^{-1} (includes Spherocarb®, Carbosieve™ S-III, Carboxen™ 1000, and Anasorb® CMS series sorbents.)

5.11 Total Ion Chromatogram (TIC)-chromatogram produced from a mass spectrometer detector operating in full scan mode.

5.12 MS-SCAN-mode of operation of a GC mass spectrometer detector such that all mass ions over a given mass range are swept over a given period of time.

5.13 MS -SIM-mode of operation of a GC mass spectrometer detector such that only a single mass ion or a selected number of discrete mass ions are monitored.

5.14 Standard Sorbent (Sample) Tube-stainless steel, glass or glass lined (or fused silica lined) stainless steel tube, 1/4 inch (6 mm) O.D. and of various lengths, with the central portion packed with ≥200 mg of solid adsorbent material depending on sorbent density. Tubes should be individually numbered and show the direction of flow.

5.15 Time Weighted Average (TWA) Monitoring-if air is sampled over a fixed time period - typically 1,3, 8 or 24 hours, the time weighted average atmospheric concentration over the monitoring period may be calculated from the total mass of analyte retained and the specific air volume sampled. Constraints on breakthrough volumes make certain combinations of sampling time and flow rates mutually exclusive.

6. Overview of Methodology

[Note: The following is intended to provide a simple and straightforward method description including the example of a specific sampling problem. Although specific equipment is listed, the document is intended only as an example and equipment mentioned in the text is usually only one of a number of equally suitable components that can be used. Hence trade names are not meant to imply exclusive endorsement for sampling and analysis using solid sorbents. Later sections in the text give guidance as to what considerations should be made for a number of VOC monitoring applications.]

6.1 Selection of Tube and Sorbent

6.1.1 Select a tube and sorbent packing for the sampling application using guidance from Tables 1 and 2 on sorbent characteristics as well as guidance from Appendix 1 and Table 3 on safe sampling volumes and breakthrough characteristics of sorbents.

6.1.2 As an example, assume the TCL includes a subset of the compounds shown in Table 3. In this case, the multisorbent tube chosen consists of two sorbents packed in a 1/4 inch O.D., 3.5" long glass tube in the following order and amounts: 160 mg of Carbopack™ graphitized carbon black (60/80 mesh) and 70 mg of Carboxen™-1000 type carbon molecular sieve (60/80 mesh). This is an example of Tube Style 2 discussed Section 9.1.3.2.

6.1.3 Pack the tube with the adsorbent by using the guidance provided in Section 10.1 or buy a prepacked tube from a supplier. In the example, tubes were purchased from Supelco Inc., Supelco Park, Bellefonte, PA 16823-0048.

6.2 Conditioning the Tube

6.2.1 Condition newly packed tubes for at least 2 hours (30 mins for preconditioned, purchased tubes) at 350°C while passing at least 50 mL/min of pure helium carrier gas through them.

[Note: Other sorbents may require different conditioning temperatures - see Table 2 for guidance.]

Once conditioned, seal the tube with brass, 1/4 inch Swagelok® -type fittings and PTFE ferrules. Wrap the sealed tubes in uncoated aluminum foil and place the tubes in a clean, airtight, opaque container.

6.2.2 A package of clean sorbent material, e.g. activated charcoal or activated charcoal/silica gel mixture, may be added to the container to ensure clean storage conditions.

6.2.3 Store in a refrigerator (organic solvent-free) at 4°C if not to be used within a day. On second and subsequent uses, the tubes will generally not require further conditioning as above. However, tubes with an immediate prior use indicating high levels of pollutant trace gases should be reconditioned prior to continued usage.

6.3 Sampling Apparatus

6.3.1 Select a sampling apparatus with accommodations for two sampling tubes capable of independent control of sampling rate at a settable value in the range 10 to 200 mL/min. Laboratory and field blanks must also be included in the monitoring exercise.

6.3.2 Backup tubes may be required to determine the cause of any problem if performance criteria, outlined in Section 14, are not met.

6.4 Sampling Rates

6.4.1 Select sampling rates compatible with the collection of 1 and 4 liter total sample volume (or of proportionally lower/higher sampling volumes).

6.4.2 Air samples are collected over 1 hour with a sampling rate of 16.7 mL/min and 66.7 mL/min, respectively.

6.5 Preparing for Sample Collection

6.5.1 At the monitoring location, keep the tubes in their storage and transportation container to equilibrate with ambient temperature.

6.5.2 Using clean gloves, remove the sample tubes from the container, take off their caps and attach them to the sampling lines with non-outgassing flexible tubing. Uncap and immediately reseal the required number of field blank tubes.

6.5.3 Place the field blank tubes back in the storage container. If back-up tubes are being used, attach them to the sampling tubes using clean, metal Swagelok® type unions and combined PTFE ferrules.

6.6 Set the Flow Rates

6.6.1 Set the flow rates of the pump using a mass flow monitor.

6.6.2 The sampling train includes, from front to back, an in-line particulate filter (optional), an ozone scrubber (optional), a sampling tube, a back-up tube if any is being used, and a flow controller/pump combination.

6.6.3 Place the mass flow monitor in line after the tube. Turn the pump on and wait for one minute. Establish the approximate sampling flow rate using a dummy tube of identical construction and packing as the sampling tube to be used. Record on Field Test Data Sheet (FTDS), as illustrated in Figure 1.

6.6.4 Place the sampling tubes to be used on the sampling train and make final adjustments to the flow controller as quickly as possible to avoid significant errors in the sample volume.

6.6.5 Adjust the flow rate of one tube to sample at 16.7 mL/min. Repeat the procedure for the second tube and set the flow rate to 66.7 mL/min. Record on FTDS.

6.7 Sample and Recheck Flow Rates

6.7.1 Sample over the selected sampling period (i.e., 1-hour). Recheck all the sampling flow rates at the end of the monitoring exercise just before switching off each pump and record on FTDS.

6.7.2 Make notes of all relevant monitoring parameters including locations, tube identification numbers, pump flow rates, dates, times, sampled volumes, ambient conditions etc. on FTDS.

6.8 Reseal the Tubes

6.8.1 Immediately remove the sampling tubes with clean gloves, recap the tubes with Swagelok® fittings using PTFE ferrules, rewrap the tubes with uncoated Al foil, and place the tubes in a clean, opaque, airtight container.

6.8.2 If not to be analyzed during the same day, place the container in a clean, cool (<4°C), organic solvent-free environment and leave there until time for analysis.

6.9 Selection of Thermal Desorption System

6.9.1 Select a thermal desorption system using the guidance provided in Section 8.

6.9.2 Place the thermal unit in a ready operational status.

6.10 Dry Purge the Tubes and Prepare for Thermal Desorption

6.10.1 Remove the sampling tubes, any backup tubes being used, and blanks from the storage area and allow the tubes to come to room temperature. Using clean gloves, remove the Swagelok®-type fittings and dry purge the tubes with a forward (sampling direction) flow of, for example, 50 mL/min of dry helium for 4 minutes (see Section 7.2 concerning dry purging).

[Note: Do not dry purge the laboratory blanks.]

6.10.2 Reseal the tubes with Teflon® (or other) caps compatible with the thermal desorber operation. Place the sealed tubes on the thermal desorber (e.g., Perkin Elmer Model ATD 400 Automated System or equivalent). Other thermal desorbers may have different arrangements for automation. Alternatively, use equivalent manual desorption.

6.11 Check for System Integrity

6.11.1 Check the air tightness of the seals and the integrity of the flow path.
6.11.2 Guidance is provided in Section 11.2 of this document.

6.12 Repurge of Tube on the Thermal Desorber/Addition of Internal Standard

6.12.1 Because of tube handling after dry purge, it may be necessary to repurge each of the tubes with pure, dry helium (He) before analysis in order to eliminate any oxygen.
6.12.2 If the initial dry purge can be performed on the thermal desorber so as to prevent any further exposure of the sorbent to air, then this step is not necessary. Proceed with the addition of an internal standard to the sorbent tube or the focusing tube.

6.13 Thermally Desorb the Packing

6.13.1 Reverse the flow direction of He gas, set the flow rate to at least 30 mL/min, and heat the tube to 325°C (in this case) to achieve a transfer of VOCs onto a focusing tube at a temperature of 27°C. Thermal desorption continues until all target species are transferred to the focusing trap. The focusing trap is typically packed with 20 mg of Carbopack™ B (60/80 mesh) and 50 mg of a Carboxen™ 1000-type sorbent (60/80 mesh).

6.14 Trap Desorption and GC/MS Analysis

6.14.1 After each tube is desorbed, rapidly heat the focusing trap (to 325°C in this example) and apply a reverse flow of at least 3 mL/min of pure helium carrier gas. Sample splitting is necessary to accommodate the capillary column. Analytes are transferred to the column in a narrow band of vapor.
6.14.2 The GC run is initiated based on a time delay after the start of thermal desorption. The remaining part of the analytical cycle is described in Section 3 of Compendium Method TO-15.

6.15 Restoring the Tubes and Determine Compliance with Performance Standards

6.15.1 When tube analysis is completed, remove the tubes from the thermal desorber and, using clean gloves, replace the Teflon® caps with Swagelok fittings and PTFE ferrules, rewrap with aluminum foil, replace in the clean, airtight container, and re-store the tubes in a cool environment (<4°C) until the next use.

6.15.2 Using previously prepared identification and quantification subroutines, identify the target compounds and document the amount of each measured compound (refer to the Section 3 of Compendium Method TO-15). Compare the results of analysis for the distributed volume pair taken during each sampling run and use the comparison to determine whether or not the performance criteria for individual sampling events have been met. Also examine the results of any laboratory blanks, field blanks, and any backup tube being used. Accept or reject the data based on the performance criteria (see Section 14).

6.16 Record and Store Data

6.16.1 Accurately retrieve field data (including the tube identification number) from the FTDS. The data should include a sampling site identifier, time of sample initiation, duration of sampling, air pump identification, flow rate, and other information as appropriate.

6.16.2 Store GC/MS data in a permanent form both in hard copy in a notebook and in digital form on a disk. Also store the data sheet with the hard copy.

[Note: Sections 7 through 14 below elaborate on the method by providing important information and guidance appropriate to explain the method as outlined in Section 6 and also to generalize the method for many applications. Section 14 gives the performance criteria for the method.]

7. Interferences and Limitations

7.1 Interference from Sorbent Artifacts

7.1.1 Minimizing Artifact Interference.

7.1.1.1 Stringent tube conditioning (see Section 10.2.1) and careful tube capping and storage procedures (see Section 10.2.2) are essential for minimizing artifacts. System and sorbent tube conditioning must be carried out using more stringent conditions of temperature, gas flow and time than those required for sample analysis.

7.1.1.2 A reasonable objective is to **reduce artifacts to 10% or less of individual analyte masses** retained during sampling. A summary of VOC levels present in a range of different atmospheric environments and the masses of individual components collected from 1, 2 or 10 L samples of air in each case is presented in Table 4.

7.1.1.3 Given that most ambient air monitoring is carried out in areas of poor air quality, for example in urban, indoor and factory fenceline environments where VOC concentrations are typically above 1 ppb, Table 4 demonstrates that the mass of each analyte retained will, therefore, range from ~5 ng to ~10 μg in most monitoring situations. Even when monitoring 'ultraclean' environments, analyte masses retained will usually exceed 0.1 ng (3).

7.1.1.4 Typical artifact levels for 1/4 inch O.D. tubes of 3.5" length range from 0.01 ng and 0.1 ng for carbonaceous sorbents and Tenax® respectively. These levels compare well with the masses of analytes collected - even from sub-ppb atmospheric concentrations (see Table 4). Artifact levels are around 10 ng for Chromosorb® Century series and other porous polymer sorbents. However, these types of sorbents can still be used for air monitoring at low ppb levels if selective or mass spectrometer detectors are used or if the blank profile of the tube demonstrates that none of the sorbent artifacts interfere analytically with the compounds of interest.

7.1.1.5 Some varieties of charcoal contain metals which will catalyze the degradation of some organic analytes during thermal desorption at elevated temperatures thus producing artifacts and resulting in low analyte recoveries.

7.1.2 Artifacts from Long-term Storage of Blank Tubes.

7.1.2.1 Literature reports of the levels of artifacts on (a) Carbotrap/pack™ C, Carbotrap/pack™ B and Carbosieve™ SIII multi-bed tubes and (b) Tenax® GR tubes, by workers sealing the tubes using metal Swagelok®-type caps and PTFE ferrules with multi-tube, glass storage jars are reported to be between 0.01 ng [after 1-2 months (4)] and 0.1 ng [after 6 months (5)] for (a) and (b) respectively.

7.1.2.2 Artifact levels reported for other porous polymers are higher - for example 5 ng for Chromosorb 106 after 1 week (5). More information is given in the Technical Assistance Document (TAD) referred to in Section 4.3.

7.1.3 Artifacts Generated During Sampling and Sample Storage.

7.1.3.1 Benzaldehyde, phenol and acetophenone artifacts are reported to be formed via oxidation of the polymer Tenax® when sampling high concentration (100-500 ppb) ozone atmospheres (6).

7.1.3.2 Tenax® should thus be used with an ozone scrubber when sampling low levels (<10 ppb) of these analytes in areas with appreciable ozone concentrations. Carbotrap™/pack type sorbents have not been reported to produce this level of artifact formation. Once retained on a sorbent tube, chemically stable VOCs, loaded in laboratory conditions, have been shown to give good recoveries, even under high ozone concentrations for storage of a year or more (7-9).

7.2 Minimizing Interference from Water

7.2.1 Selection of Hydrophobic Sorbents

7.2.1.1 There are three preferred approaches to reducing water interference during air monitoring using sorbent tubes. The first is to minimize water collection by selecting, where possible, a hydrophobic sorbent for the sample tube.

7.2.1.2 This is possible for compounds ranging in volatility from n-C5 (see SSVs listed in Appendix 1). Tenax®, Carbotrap™ or one of the other hydrophobic sorbents listed in Table 2 should be used.

[Note: It is essential to ensure that the temperature of the sorbent tube is the same and certainly not lower than ambient temperature at the start of sampling or moisture will be retained via condensation, however hydrophobic the sorbent.]

7.2.2 Sample Splitting

7.2.2.1 If the sample loading is high, it is usually possible to eliminate sufficient water to prevent analytical interference by using sample splitting (10).

7.2.2.2 Sample may be split either (1) between the focusing trap and the capillary column (single splitting) during trap (secondary) desorption or (2) between both the tube and the focusing trap during primary (tube) desorption and between the focusing trap and the column during secondary (trap) desorption (see Section 8.2.3) (double splitting). It may, in fact, be necessary to split the sample in some cases to prevent overloading the analytical column or detector.

7.2.3 Dry Purge

7.2.3.1 The third water management method is to ?dry purge" either the sorbent tube itself or the focusing trap or both (11-13). Dry purging the sample tube or focusing trap simply involves passing a volume of pure, dry, inert gas through the tube from the sampling end, prior to analysis.

7.2.3.2 The tube can be heated while dry purging at slightly elevated temperatures (11). A trap packing combination and a near ambient trapping temperature must be chosen such that target analytes are quantitatively retained while water is purged to vent from either the tube or trap.

7.3 Atmospheric Pollutants not Suitable for Analysis by this Method

7.3.1 Inorganic gases not suitable for analysis by this method are oxides of carbon, nitrogen and sulfur, O_3 and other permanent gases. Exceptions include CS_2 and N_2O.

7.3.2 Other pollutants not suitable are particulate pollutants, (i.e., fumes, aerosols and dusts) and compounds too labile (reactive) for conventional GC analysis.

7.4 Detection Limits and Maximum Quantifiable Concentrations of Air Pollutants

7.4.1 Detection limits for atmospheric monitoring vary depending on several key factors. They are:

- Minimum artifact levels.
- GC detector selection.
- Volume of air sampled. The volume of air sampled is in turn dependent upon a series of variables including SSVs (see Section 10.8, Table 1 and Appendix 1), pump flow rate limitations and time-weighted-average monitoring time constraints.

7.4.2 Generally speaking, detection limits range from sub-part-per-trillion (sub-ppt) for halogenated species such as CCl_4 and the freons using an electron capture detector (ECD) to sub-ppb for volatile hydrocarbons in 1 L air samples using the GC/MS operated in the full SCAN mode.

7.4.3 Detection limits are greatly dependent upon the proper management of water for GC capillary analysis of volatile organics in air using sorbent technology (14).

7.5 Suitable Atmospheric Conditions

7.5.1 Temperature range.

7.5.1.1 The normal working range for sorbent packing is 0-40°C (8).

7.5.1.2 In general, an increase in temperature of 10ºC will reduce the breakthrough volume for sorbent packings by a factor of 2.

7.5.2 Humidity.

7.5.2.1 The capacity of the analytical instrumentation to accommodate the amount of water vapor collected on tubes is usually the limitation in obtaining successful results, particularly for GC/MS applications. This limitation can be extreme, requiring the use of a combination of water management procedures (see Section 7.2).

7.5.2.2 The safe sampling volumes of VOCs on hydrophobic adsorbents such as Tenax®, other porous polymers, Carbotrap™ and Carbopack™ are relatively unaffected by atmospheric humidity. Spherocarb® or carbonized molecular sieve type sorbents such as Carbosieve™ SIII and the Carboxens® are affected by high humidity, however, and SSVs should typically be reduced by a factor of 10 at 90-95% RH (8). Hydrophilic zeolite molecular sieves cannot be used at all at high humidity.

7.5.3 Wind speeds.

7.5.3.1 Air movement is not a factor indoors or outdoors at wind speeds below 10 miles per hour (<20 km per hour).

7.5.3.2 Above this speed, tubes should be orientated perpendicular to the prevailing wind direction and should be sheltered from the direct draft if wind speeds exceed 20 miles per hour (30-40 km per hour) (see Section 10.5).

7.5.4 High concentrations of particulates.

7.5.4.1 It may be necessary to connect a particulate filter (e.g., a 2 micron Teflon® filter or short clean tube containing a loose plug of clean glass wool) to the sampling end of the tube in areas of extremely high particulate concentrations.

7.5.4.2 Some compounds of interest may, however, be trapped on the Teflon® or on the glass wool. Particulates trapped on the sorbent tube have the potential to act as a source or sink for volatiles, and may remain on the tube through several cycles of sampling and desorption. Frequent replacement of the particulate filter is therefore recommended.

8. Apparatus Selection and Preparation

8.1 Sample Collection

8.1.1 Selection of Tube Dimensions and Materials.

8.1.1.1 The most extensively used sorbent tubes are 1/4 inch O.D. stainless steel or 6 mm O.D. stainless steel or glass. Different suppliers provide different size tubes and packing lengths; however, 3.5 inch long tubes with a 6 cm sorbent bed and 1/4 inch O.D. stainless steel (see Figure 2) were used to generate the SSV information presented in Appendix 1.

8.1.1.2 As an approximate measure, for sorbents contained in equal diameter tubes the breakthrough volume is proportional to the bed-length (weight) of sorbent. Therefore, doubling the bed-length would approximately double the SSV (15).

8.1.1.3 Stainless steel (304 or "GC" grade) is the most robust of the commonly available tube materials which include, in addition, glass, glass-lined, and fused silica lined tubing. Tube material must be chosen to be compatible with the specifics of storage and transport of the samples. For example, careful attention to packaging is required for glass tubes.

8.1.2 Tube Labeling.

8.1.2.1 Label sample tubes with a unique identification number and the direction of sampling flow. Stainless steel tubes are most conveniently labeled by engraving. Glass tubes are best labeled using a temperature resistant paint. If empty sample tubes are obtained without labels, it is important to label and condition them before they are packed with adsorbent.

8.1.2.2 Recondition prepacked, unlabeled tubes after the tube labeling process and record the blank chromatogram from each tube. Record in writing the details of the masses and/or bed lengths of sorbent(s) contained in each tube, the maximum allowable temperature for that tube and the date each tube was packed or repacked.

8.1.3 Blank and Sampled Tube Storage Apparatus.

8.1.3.1 Seal clean, blank sorbent tubes and sampled tubes using inert, Swagelok®-type fittings and PTFE ferrules. Wrap capped tubes individually in uncoated aluminum foil. Use clean, sealable glass jars or metal cans containing a small packet of activated charcoal or activated charcoal/silica gel for storage and transportation of multiple tubes. Store the multi-tube storage container in a clean environment at 4°C.

8.1.3.2 Keep the sample tubes inside the storage container during transportation and only remove them at the monitoring location after the tubes have reached ambient temperature. Store sampled tubes in a refrigerator at 4°C inside the multi-tube container until ready for analysis.

[Note: The atmosphere inside the refrigerator must be clean and free of organic solvents.]

8.1.4 Selection of Sampling Pumps.

8.1.4.1 The selected monitoring pump(s) should be capable of operating in the range 10 to 200 mL/min. Label the pumps with a unique identification number and operate them according to manufacturer's guidelines.

8.1.4.2 Constant mass flow type pumps are ideal for air monitoring as they deliver a constant flow rate for a wide range of tube impedances. They thus compensate for moderate impedance variations between the sorbent tubes in use. The pump should meet US criteria for intrinsic safety where applicable. Connect the pump to the non-sampling end of the sample tube by means of flexible, nonoutgassing tubing.

8.1.5 Parallel Sampling onto Multiple Tubes with a Single Pump.

8.1.5.1 Select a sample collection system for collecting samples onto 2 tubes in parallel.

8.1.5.2 If a single pump is used for both tubes, ensure that the flow rates will be controlled at a constant flow rate during sampling and that the two flow rates can be independently controlled and stabilized.

8.1.6 Apparatus for Calibrating the Pumped Air Flow.

8.1.6.1 Calibrate the pump with the type of sorbent tube to which it will be connected during the monitoring exercise. Use the actual sampling tube to fine tune the sampling flow rate at the start of sample collection.

8.1.6.2 Use a flow meter certified traceable to NIST standards.

8.1.7 Sorbent Tube Protection During Air Sample Collection.

8.1.7.1 Protect sorbent tubes from extreme weather conditions using shelters constructed of inert materials. The shelter must not impede the ingress of ambient air.

8.1.7.2 If the atmosphere under test contains significant levels of particulates - fume, dust or aerosol, connect a Teflon® 2-micron filter or a (metal, glass, glass-lined or fused silica lined stainless) tube containing a short plug of clean glass wool prior to the sampling end of the tube and using inert, Swagelok®-type fittings and PTFE ferrules for fitting connections.

8.2 Apparatus

8.2.1 Essential Sample Protection Features of the Thermal Desorption Apparatus.

8.2.1.1 As thermal desorption is generally a one shot process, (i.e., once the sample is desorbed it cannot readily be reinjected or retrieved), stringent sample protection measures and thorough preanalysis system checks must form an integral part of the thermal desorption-GC procedure and should be systematically carried out.

8.2.1.2 The sample integrity protection measures and preanalysis checks required include:

- **Sealed tubes**. Sample tubes awaiting analysis on an automated desorption system must be completely sealed before thermal desorption to prevent ingress of VOC contaminants from the laboratory air and to prevent losses of weakly retained analytes from the tube.
- **Inert and heated sample flow path**. To eliminate condensation, adsorption and degradation of analytes within the analytical system, the sample flow path of manual and automated thermal desorbers should be uniformly heated (minimum temperature range 50° - 150°C) between the sample tube and the GC analytical column. The components of the sample flow path should also, as far as possible, be constructed of inert materials, i.e., deactivated fused silica, glass lined tubing, glass, quartz and PTFE.
- **Tube leak testing**. This activity must not jeopardize sample integrity.
- **Leak testing of the sample flow path**. This activity must not jeopardize sample integrity.
- **System purge**. Stringent, near-ambient temperature carrier gas purge to remove oxygen.
- **Analytical system**. ?Ready" status checks.

8.2.2 Thermal Desorption Apparatus.

8.2.2.1 Two-stage thermal desorption is used for the best high resolution capillary chromatography (i.e., analytes desorbed from the sorbent tube must be refocused before being rapidly transferred to the GC analytical column). One type of analyte refocusing device which has been successfully used is a small sorbent trap (17). One cryogen-free trap cooling option is to use a multistage Peltier electrical cooler (18,19).

8.2.2.2 Closed cycle coolers are also available for use. At its low temperature, the trap must provide quantitative analyte retention for target compounds as well as quantitative and rapid desorption of target analytes as high boiling as n-C_{12}. The peak widths produced must be compatible with high resolution capillary gas chromatography.

8.2.2.3 Typical key components and operational stages of a two-stage desorption system are presented in Figure 3(a) - (f) and a stepwise description of the thermal desorber operation is presented in Section 11.3.

8.2.3 Sample Splitting Apparatus.

8.2.3.1 Sample splitting is often required to reduce water vapor interference, for the analysis of relatively high concentration (>10 ppb level) air samples, when large volume air samples are collected, or when sensitive selective detectors are in use.

8.2.3.2 Sample splitting is one of the three key approaches to water management detailed in this method (see Section 7.2). Moisture management by sample splitting is applicable to relatively high concentrations ($\geq$10 ppb) or large volume air samples or to analyses employing extremely sensitive detectors - for example, using the ECD for low levels of tetrachloroethylene. In these cases the masses of analytes retained by the sorbent tube when monitoring such atmospheres is large enough to allow, or even require, the selection of a high split ratio (>10:1) during analysis to avoid overloading the analytical column or detector. The mass of water retained by the sorbent tube during sample collection may be sufficiently reduced by the split alone to eliminate the need for further water management steps.

8.2.4 The Thermal Desorber - GC Interface.

8.2.4.1 Heat the interface between the thermal desorber and the GC uniformly. Ensure that the interface line is leak tight and lined with an inert material such as deactivated fused silica.

8.2.4.2 Alternatively, thread the capillary column itself through the heated transfer line/interface and connected directly into the thermal desorber.

[Note: Use of a metal syringe-type needle or unheated length of fused silica pushed through the septum of a conventional GC injector is not recommended as a means of interfacing the thermal desorber to the chromatograph. Such connections result in cold spots, cause band broadening and are prone to leaks.]

8.2.5 GC/MS Analytical Components. This method uses the GC/MS description as given in Compendium Method TO-15, Section 7.

8.3 Tube Conditioning Apparatus

8.3.1 Tube Conditioning Mode

8.3.1.1 Condition freshly packed tubes using the analytical thermal desorption apparatus if it supports a dedicated 'tube conditioning mode' (i.e., a mode in which effluent from highly contaminated tubes is directed to vent without passing through key parts of the sample flow path such as the focusing trap).

8.3.2 Stand Alone System

8.3.2.1 If such a tube conditioning mode is not available, use separate stand-alone tube conditioning hardware.

8.3.2.2 The tube conditioning hardware must be leak-tight to prevent air ingress, allow precise and reproducible temperature selection (±5°C), offer a temperature range at least as great as that of the thermal desorber and support inert gas flows in the range of 50 to 100 mL/min.

[Note: Whether conditioning is carried out using a special mode on the thermal desorber or using separate hardware, pass effluent gases from freshly packed or highly contaminated tubes through a charcoal filter during the process to prevent desorbed VOCs polluting the laboratory atmosphere.]

9. Reagents and Materials

9.1 Sorbent Selection Guidelines

9.1.1 Selection of Sorbent Mesh Size.

9.1.1.1 Sieved sorbents of particle size in the range 20 to 80 mesh should be used for tube packing.

9.1.1.2 Specific surface area of different sorbents is provided in Table 2.

9.1.2 Sorbent Strength and Safe Sampling Volumes.

9.1.2.1 Many well-validated pumped and diffusive sorbent tube sampling/thermal desorption methods have been published at the relatively high atmospheric concentrations (i.e., mid-ppb to ppm) typical of workplace air and industrial/mobile source emissions (8, 20-30).

9.1.2.2 These methods show that SSVs are unaffected by analyte concentrations far in excess of the 25 ppb upper limit of this method. The effect of humidity on SSVs is discussed in Section 7.5 and Table 2.

9.1.2.3 Select a sorbent or series of sorbents of suitable strength for the analytes in question from the information given in Tables 1 and 2 and Appendices 1 and 2. Where a number of different sorbents fulfill the basic safe sampling volume criteria for the analytes in question, choose that (or those) which are hydrophobic and least susceptible to artifact formation. Keep the field sampling volumes to 80% or less of the SSV of the least well-retained analyte. Using one of the two procedures given in Section 10.8, check the safe sampling volumes for the most volatile analytes of interest on an annual basis or once every twenty uses of the sorbent tubes whichever occurs first.

9.1.3 Three General-Purpose 1/4 Inch or 6 mm O.D. Multi-Bed Tube Types.

[Note: The three general-purpose tubes presented in this section are packed with sorbents in the mesh size range of 20-80 mesh. The difference in internal diameter between standard glass and stainless steel tubes will result in different bed volumes (weights) for the same bed length.]

9.1.3.1 Tube Style 1 consists of 30 mm Tenax®GR plus 25 mm of Carbopack™ B separated by 3 mm of unsilanized, preconditioned glass or quartz wool. Suitable for compounds ranging in volatility from n-C_6 to n-C_{20} for air volumes of 2 L at any humidity. Air volumes may be extended to 5 L or more for compounds ranging in volatility from n-C_7.

9.1.3.2 Tube Style 2 consists of 35 mm Carbopack™ B plus 10 mm of Carbosieve™ SIII or Carboxen™ 1000 separated by glass/quartz wool as above. Suitable for compounds ranging in volatility from n-C_3 to n-C_{12} (such as ?Compendium Method TO-14 air toxics") for air volumes of 2 L at relative humidities below 65% and temperatures below 30°C. At humidities above 65% and ambient temperatures above 30°C, air volumes should be reduced to 0.5 L. Air volumes may be extended to 5 L or more for species ranging in volatility from n-C_4. A dry purge procedure or a large split ratio must be used during analysis when humid air has been sampled on these tubes.

9.1.3.3 Tube Style 3 consists of 13 mm Carbopack™ C, 25 mm Carbopack™ B plus 13 mm of Carbosieve™ SIII or Carboxen™ 1000 all separated by 3 mm plugs of glass/quartz wool as above. Suitable for compounds ranging in volatility from n-C_3 to n-C_{16} for air volumes of 2 L at relative humidities below 65 percent and temperatures below 30°C. At humidities above 65 percent and ambient temperatures above 30°C, air volumes should be reduced to 0.5 L. Air volumes may be extended to 5 L or more for compounds ranging in volatility from n-C_4. A dry purge procedure or a large split ratio must be used during analysis when humid air has been sampled on these tubes.

[Note: These multi-bed tubes are commercially available prepacked and preconditioned if required.]

[Note: These general purpose multi-bed tubes are only recommended for monitoring unknown atmospheres or wide volatility range sets of target analytes. Most routine monitoring of industrial air (for example at factory fencelines) only involves monitoring a few specific target analytes such as benzene, toluene, ethylbenzene, and xylenes (BTEX), carbon disulfide (CS_2) or 1,1,1-trichloroethane. Single-bed sorbent tubes selected from the options listed in Appendix 1 are typically used in these cases.]

[Note: In the interests of minimizing water retention it is advisable to stick to hydrophobic (i.e., weak and medium strength) sorbents whenever possible; this generally is the case when components more volatile than n-C_6 are not of interest.]

9.2 Gas Phase Standards

9.2.1 Standard Atmospheres.

9.2.1.1 Standard atmospheres must be stable at ambient pressure and accurate (±10%). Analyte concentrations and humidities should be similar to those in the typical test atmosphere. Standard atmospheres must be sampled onto conditioned sorbent tubes using the same pump flow rates as used for field sample collection.

9.2.1.2 If a suitable standard atmosphere is obtained commercially, manufacturer's recommendations concerning storage conditions and product lifetime should be rigidly observed.

9.2.2 Concentrated, Pressurized Gas Phase Standards.

9.2.2.1 Use accurate (± 5%), concentrated gas phase standards in pressurized cylinders such that a 0.5 - 5.0 mL gas sampling volume (GSV) loop contains approximately the same masses of analytes as will be collected from a typical air sample. Introduce the standard onto the sampling end of conditioned sorbent tubes using at least ten times the loop volume of pure helium carrier gas to completely sweep the standard from the GSV.

9.2.2.2 Manufacturer's guidelines concerning storage conditions and expected lifetime of the concentrated gas phase standard should be rigidly observed.

9.3 Liquid Standards

9.3.1 Solvent Selection.

9.3.1.1 If liquid standards are to be loaded onto sorbent tubes for calibration purposes, select a solvent for the standard that is pure (contaminants <10% of minimum analyte levels) and that, if possible, is considerably more volatile than the target analytes. This then allows the solvent to be purged and eliminated from the tube during the standard preparation process.

9.3.1.2 Methanol most commonly fills these criteria. If the target analyte range includes very volatile components, it will not be possible to do this. In these cases, select a pure solvent which is readily chromatographically resolved from the peaks/components of interest (ethyl acetate is commonly used) or use a

gas phase standard. Test the purity of the solvent by comparing an analysis of the prepared standard with an analysis of pure solvent under identical chromatographic conditions.

9.3.2 Liquid Standard Concentrations.

9.3.2.1 Liquid standards should be prepared so that the range of analyte masses introduced onto the tubes is in the same order as the range of masses expected to be collected during sampling.

9.3.2.2 Concentrations of benzene in urban air may be expected to range from 0.5-25 ppb. Thus if 5 L air samples were to be collected at approximately 25°C, the masses of benzene collected would range from around 8 ng (0.5 ppb level) to around 400 ng (25 ppb level).

[Note: The above calculation was derived from Boyle's law (i.e., 1 mole of gas occupies around 25 L at 25°C and 760 mm Hg).

- *25 L of pure benzene vapor contains 78 g benzene*
- *5 L of pure benzene vapor contains 15.6 g benzene*
- *5 L of a 1 ppm benzene atmosphere contains 15.6 μg benzene*
- *5 L of a 100 ppb benzene atmosphere contains 1560 ng benzene*
- *5 L of a 1 ppb benzene atmosphere contains 15.6 ng benzene.]*

9.3.3 Loading Liquid Standards onto Sorbent Tubes.

9.3.3.1 Introduce 0.1 - 10 μL aliquots of the liquid standards onto the sampling end of conditioned sorbent tubes using a conventional 1/4 inch GC packed column injector and a 1, 5 or 10 μL syringe. The injector is typically unheated with a 100 mL/min flow of pure carrier gas. The solvent and analytes should completely vaporize and pass onto the sorbent bed in the vapor phase. It may be necessary to heat the injector slightly (typically to 50°C) for analytes less volatile than n-C_{12} to ensure that all the liquid vaporizes.

9.3.3.2 The sample tube should remain attached to the injector until the entire standard has been swept from the injector and onto the sorbent bed. If it has been possible to prepare the liquid standard in a solvent which will pass through the sorbent while analytes are quantitatively retained (for example, methanol on Tenax® or Carbopack™ B), the tube should not be disconnected from the injector until the solvent has been eliminated from the sorbent bed - this takes approximately 5 minutes under the conditions specified. Once the tube has been disconnected from the injector, it should be capped and placed in an appropriate storage container immediately.

[Note: In cases where it is possible to purge the solvent from the tube while quantitatively retaining the analytes, a 5-10 μL injection should be made as this can usually be introduced more accurately than smaller volumes. However, if the solvent is to be retained in the tube, the injection volume should be as small as possible (0.5 - 1.0 μL) to minimize solvent interference in the subsequent chromatogram.]

9.3.3.3 This method of introducing liquid standards onto sorbent tubes via a GC injector is considered the optimum approach to liquid standard introduction as components reach the sorbent bed in the vapor phase (i.e., in a way which most closely parallels the normal air sample collection process). Alternatively, liquid standards may be introduced directly onto the sorbent bed via the non-sampling end of the tube using a conventional GC syringe.

[Note: This approach is convenient and works well in most cases, but it may not be used for multi-bed tubes or for wide boiling range sets of analytes and does not allow solvent to be purged to vent.]

9.4 Gas Phase Internal Standards

9.4.1 The ideal internal standard components are:

- chemically similar to the target analytes
- extremely unlikely to occur naturally in the atmosphere under test
- readily resolved and distinguished analytically from the compounds of interest
- stable in the vapor phase at ambient temperature
- compatible with metal and glass surfaces under dry and humid conditions
- certified stable in a pressurized form for a long time period (i.e., up to 1 year).

9.4.2 Deuterated or fluorinated hydrocarbons usually meet all these criteria and make perfect internal standards for MS based systems. Typical compounds include deuterated toluene, perfluorobenzene and perfluorotoluene. Multiple internal standards should be used if the target analytes cover a very wide volatility range or several different classes of compound.

9.4.3 Obtain a pressurized cylinder containing accurate (±5%) concentrations of the internal standard components selected. Typically a 0.5 to 5.0 mL volume of this standard is automatically introduced onto the back of the sorbent tube or focusing trap after the tube has passed preliminary leak tests and before it is thermally desorbed. The concentration of the gas should be such that the mass of internal standard introduced from the GSV loop is approximately equivalent to the mass of analytes which will be sampled onto the tube during sample collection. For example, a 1 L air sample with average analyte concentrations in the order of 5 ppb, would require a 10 ppm internal standard, if only 0.5 mL of the standard is introduced in each case.

9.5 Commercial, Preloaded Standard Tubes

9.5.1 Certified, preloaded commercial standard tubes are available and should be used for auditing purposes wherever possible to establish analytical quality control (see Section 14). They may also be used for routine calibration. Suitable preloaded standards should be accurate within ±5% for each analyte at the microgram level and ±10% at the nanogram level.

9.5.2 The following information should be supplied with each preloaded standard tube:

- A chromatogram of the blank tube before the standard was loaded with associated analytical conditions and date.
- Date of standard loading
- List of standard components, approximate masses and associated confidence levels
- Example analysis of an identical standard with associated analytical conditions (these should be the same as for the blank tube)
- A brief description of the method used for standard preparation
- Expiration date

9.6 Carrier Gases

Inert, 99.999% or higher purity helium should be used as carrier gas. Oxygen and organic filters should be installed on the carrier gas lines supplying the analytical system. These filters should be replaced regularly according to the manufacturer's instructions.

10. Guidance on Sampling and Related Procedures

10.1 Packing Sorbent Tubes

10.1.1 Commercial Tubes

10.1.1.1 Sorbent tubes are commercially available either prepacked and preconditioned or empty.

10.1.1.2 When electing to purchase empty tubes and pack/condition them as required, careful attention must be paid to the appropriate manufacturer's instructions.

10.1.2 Tube Parameters

10.1.2.1 Key parameters to consider include:

- **Sorbent bed positioning within the tube**. The sampling surface of the sorbent bed is usually positioned at least 15 mm from the sampling end of the tube to minimize sampling errors due to diffusive ingress. The position of the sorbent bed must also be entirely within that section of the tube which is surrounded by the thermal desorption oven during tube desorption.
- **Sorbent bed length**. The sorbent bed must not extend outside that portion of the tube which is directly heated by the thermal desorption oven.
- **Sorbent mesh size**. 20 to 80 mesh size sorbent is recommended to prevent excessive pressure drop across the tube which may cause pump failure. It is always recommended that sorbents be sieved to remove **?**fines" (undersized particles) before use.
- **Use of appropriate sorbent bed retaining hardware inside the tube**. Usually 100 mesh stainless steel gauzes and retaining springs are used in stainless steel tubes and unsilanized, preconditioned glass or quartz wool in glass tubes.
- **Correct conditioning procedures**. See Table 2 and Section 10.2.
- **Bed separation**. If a single tube is to be packed with two or three different sorbents, these must be kept in discreet beds separated by ~3 mm length plugs of unsilanized, preconditioned glass or quartz wool or glass fiber disks and arranged in order of increasing sorbent strength from the sampling end of the tube. Do not use sorbents of widely different maximum temperatures in one tube or it will be difficult to condition the more stable sorbents without exceeding the maximum recommended temperature of the less stable sorbents.

[Note: Silanized glass or quartz wool may be used for labile species such as sulfur or nitrogen containing compounds but should not be taken to temperatures above 250°C.]

- **Compression of bed**. The sorbent bed must not be compressed while packing the tube. Compression of the sorbent can lead to excessive tube impedance and may produce **?**fines".

10.1.2.2 Tubes packed with porous polymer sorbents (Chromosorbs®, Porapaks® and Tenax®) should be repacked after 100 thermal cycles or if the performance criteria cannot be met. Tubes packed with carbonaceous sorbents such as Spherocarb®, Carbotrap™, Carbopack™, Carbosieve™ SIII and Carboxens® should be repacked every 200 thermal cycles or if the safe sampling volume validation procedure fails.

10.2 Conditioning and Storage of Blank Sorbent Tubes

10.2.1 Sorbent Tube Conditioning.

10.2.1.1 The success of sorbent tube sampling for ppb and sub-ppb level air monitoring is largely dependent on artifact levels being at significantly lower levels (<10%) than the masses of analytes collected during air monitoring. A summary of recommended conditioning parameters for various individual sorbents and multibed tubes is given in Table 2. 1/4 inch O.D. sorbent tubes may be adequately conditioned using elevated temperatures and a flow of ultra-pure inert gas. Washing or any other preconditioning of the bulk sorbent is not usually necessary. Appropriate, dedicated tube conditioning hardware should be used for tube conditioning unless the thermal desorption system offers a separate tube conditioning mode.

10.2.1.2 The tube conditioning temperatures and gas flows recommended in Table 2 should be applied for at least 2 hours when a tube is packed with fresh adsorbent or when its history is unknown.

Sorbent tubes which are:

- desorbed to completion during routine analysis (as is normally the case)
- stored correctly (see Section 10.2.2)
- re-issued for air sampling within 1 month (1 week for Chromosorb®, Tenax® and Porapak® porous polymers)
- and are to be used for atmospheres with analytes at the 10 ppb level or above

do not usually require any reconditioning at all before use. However, tubes to be used for monitoring at lower levels should be both reconditioned for 10-15 minutes using the appropriate recommended conditioning parameters and put through a ?dummy" analysis using the appropriate analytical conditions to obtain blank profiles of each tube before they are issued for sampling.

10.2.1.3 Analytical system conditioning procedures are supplied by system manufacturers. Generally speaking, both system and sorbent tube conditioning processes must be carried out using more stringent conditions of temperature, gas flow and time than those required for sample analysis - within the maximum temperature constraints of all the materials and equipment involved.

10.2.2 Capping and Storage of Blank Tubes.

10.2.2.1 Blank tubes should be capped with ungreased, Swagelok®-type, metal screw-caps and combined PTFE ferrules. The screw caps should be tightened by hand and then an extra 1/4 turn with a wrench. If uncoated aluminum foil is required, tubes should be wrapped individually.

10.2.2.2 Batches of blank, sealed tubes should be stored and transported inside a suitable multi-tube container.

10.3 Record Keeping Procedures for Sorbent Tubes

Sample tubes should be indelibly labeled with a unique identification number as described in Section 8.1.2. Details of the masses and/or bed lengths of sorbent(s) contained in each tube, the maximum allowable temperature for that tube and the date each tube was packed should be permanently recorded. A record should also be made each time a tube is used and each time the safe sampling volume of that tube is retested so that its history can be monitored. If a tube is repacked at any stage, the records should be amended accordingly.

10.4 Pump Calibration and Tube Connection

10.4.1 Tube Deployment

10.4.1.1 Once at ambient temperature, remove the tubes from the storage container, uncap and connect them to the monitoring pumps as quickly as possible using clean, non-outgassing flexible tubing. Multi-bed sorbent tubes must be orientated so that the air sample passes through the series of sorbents in order of increasing sorbent strength (i.e., weaker sorbent first). This prevents contamination of the stronger adsorbent with less volatile components.

10.4.1.2 In all cases the sampling end of the tube must be clearly identified and recorded.

10.4.1.3 A typical sampling configuration for a distributed volume pair of sampling tubes is shown in Figure 4.

10.4.2 Pump Calibration

10.4.2.1 Pumps should be calibrated according to the manufacturer's instructions, preferably at the monitoring location immediately before sampling begins or, alternatively, in a clean environment before the tubes and pumps are transported to the monitoring site. The apparatus required is described in Section 8.1.6. Details of the pump flow rate delivered with a given identified tube and the flow rate, stroke rate or pressure selected on the pump itself should be recorded together with the date.

10.4.2.2 The pump flow rate should be retested at the end of each sampling period to make sure that a constant pump rate was maintained throughout the sample collection period. The flow rate measured at the end of sampling should agree within 10% with that measured at the start of the sampling period for the sample to be considered valid and the average value should be used.

10.5 Locating and Protecting the Sample Tube

The sampling points of individual sorbent tubes or sequential tube samplers should not be unduly influenced by nearby emission sources unless the emission source itself is specifically being monitored. Common sense generally determines the appropriate placement. Field notes on the relative location of known emission sources should be part of the permanent record and identified on the FTDS. Some shelter or protection from high winds (see Section 8.1.7) other extreme weather conditions and high levels of particulates is required for the sample tube if it is to be left unattended during the monitoring period.

10.6 Selection of Pump Flow Rates and Air Sample Volumes

10.6.1 Flow Rate Selection

10.6.1.1 For 1/4 inch O.D. tubes, 50 mL/min is the theoretical optimum flow rate (31). However, negligible variation in retention volume will in fact be observed for pump flow rates varying from 5 to 200 mL/min. Pump flow rates above 10 mL/min are generally used in order to minimize errors due to ingress of VOCs via diffusion. Flow rates in excess of 200 mL/min are not recommended for standard 1/4-inch sample tubes unless for short term (e.g. 10 minute) monitoring (21).

[Note: High sampling flow rates can be used longer term for high boiling materials such as low level, vapor phase polychlorinated biphenyls (PCBs) and polycyclic aromatic hydrocarbons (PAHs) in air.]

10.6.1.2 One and four liter air sample volumes are recommended for this method if consistent with anticipated safe sampling volumes. Adjustments of the flow rates to accommodate low safe sampling volumes should be made by proportionally reducing both rates with the qualification that the lower flow rate result is no less than 300 mL total volume. The 300 mL sample gives adequate detection limits (<0.5 ppb per analyte) with

full scan mass spectrometry detection for ambient air applications (see Table 4). Sensitivity is generally enhanced at least ten-fold if conventional GC detectors or selected ion monitoring are applied. However; the pump flow rate, sampling time and consequently air volume selected may be varied to suit the requirements of each individual air monitoring exercise.

10.6.1.3 Typical example pump flow rates include:

- 16 mL/min to collect 1 L air samples in 1 hour
- 67 mL/min to collect 4 L air samples in 1 hour
- 10 mL/min to collect 1800 mL air samples over 3 hours
- 40 mL/min to collect 7200 mL air samples over 3 hours

10.6.2 Pump Flow Rate Selection

10.6.2.1 The pump flow rate used is dependent upon:

- **Safe sampling volume constraints**. The flow rate must be adjusted (within the allowed range) to ensure that, for the chosen sample collection time, SSVs are not exceeded for any target analyte
- **Time weighted average monitoring requirements**. If long-term - 3, 8 or even 24 hour - time weighted average data are required, the pump flow rate must be adjusted to ensure SSVs are not exceeded during the sample collection period.
- **GC detection limits**. Within the constraints of safe sampling volumes and pump flow rate limits, air volumes selected for trace level (ambient) air monitoring, should be maximized such that the largest possible analyte masses are collected.

10.6.2.2 Typical VOC concentrations and the associated analyte masses retained from a range of different air sample volumes in various atmospheres are presented in Table 4.

10.7 Sampling Procedure Verification - Use of Blanks, Distributed Volume Pairs, Back-Up Tubes, and Distributed Volume Sets

10.7.1 Field and Laboratory Blanks

10.7.1.1 Laboratory blanks must be identically packed tubes, from the same batch, with similar history and conditioned at the same time as the tubes used for sample collection. At least two are required per monitoring exercise. They must be stored in the laboratory in clean controlled conditions (<4°C) throughout the monitoring program and analyzed at the same time as the samples-- one at the beginning and one at the end of the sequence of runs.

10.7.1.2 Field blanks are the same as laboratory blanks except that they are transported to and from the monitoring site, are uncapped and immediately resealed at the monitoring site, but do not actually have air pumped through them. One field blank tube is taken for every ten sampled tubes on a monitoring exercise and no less than two field blanks should be collected, however small the monitoring study. The field blanks should be distributed evenly throughout the set of sampled tubes to be analyzed. Guidance on acceptable performance criteria for blanks is given in Section 13.

10.7.2 Distributed Volume Pairs

10.7.2.1 When monitoring for specific analytes using a validated sorbent tube but in an uncharacterized atmosphere, it is advisable to collect distributed volume tube pairs - e.g. 1 and 4 L samples - in parallel at every monitoring location as described in Section 6. If single tube sampling is used to reduce analysis costs, a reduction in the quality assurance associated with this method has to be assumed.

10.7.2.2 Back-up tubes (identical to those used for sample collection) should be used to investigate situations in which distributed volume pairs do not agree within acceptable tolerance. To use back-up tubes, a second identical sampling tube is placed in series with a primary (front) tube. The purpose of the backup tube is to capture compounds that pass through the primary tube because of breakthrough. Analysis of the backup tube may indicate unexpected breakthrough or give evidence of channeling of sample through the tube because of loose packing.

10.7.2.3 A significant volume of literature exists on the use of distributed volume sets to determine the occurrence of nonlinearities when different sample volumes are taken from the same sample air mix. Ideally, the quantity of material collected scales linearly with sample volume. If this is not the case, then one of a number of problems has occurred. The 4-tube distributed volume developed by Walling, Bumgardner, and co-workers (32,33) is a method by which sample collection problems can be investigated.

10.8 Determining and Validating Safe Sampling Volumes (SSV)

10.8.1 Field Test Method for Tube Breakthrough.

10.8.1.1 If SSV information is not readily available for the analytes under test on the sorbent tube selected, or if the safe sampling volumes need validating - the following field experiment may be used. Link at least 12 of the sorbent tubes under test together in series to give 6 pairs of tubes. Use inert, preferably Swagelok®-type 1/4-inch metal unions with PTFE fittings. The sampling end of the back up tube should be connected to the exit end of the front tube in each of the pairs. The tube pairs are then connected to calibrated monitoring pumps and used to simultaneously sample at least 3 different air volumes at pump flow rates between 10 and 200 mL/min with 2 replicates at each air sample volume.

10.8.1.2 The experiment should be carried out in the atmosphere to be monitored and, if possible, under worst-case conditions (i.e., highest natural humidity and highest typical VOC concentrations). The sampling points of all the tube pairs should be placed close together to ensure that, as far as possible, tubes are all sampling the same atmosphere. The sampling location selected should be well ventilated. Both the front and back-up tubes of each tube pair should subsequently be analyzed using thermal desorption - capillary GC.

10.8.1.3 If more than 5% of one or more of the target analytes is observed on any of the back-up tubes, breakthrough is shown to have occurred at that sample volume. For practical purposes, the BV for a given sorbent/analyte combination is usually considered to be the sample volume at which there is 5% breakthrough of that analyte onto the back-up tube. The SSV for that analyte/sorbent combination is then taken as two thirds (~66%) of the BV.

10.8.2 Chromatographic Test of Tube Retention Volume for Individual Analytes

10.8.2.1 Inject 0.5 mg of each analyte into a stoppered ~1L volume glass flask fitted with a septum. Check that all the analyte has evaporated.

10.8.2.2 Connect the sample tube under test to a 1/4 inch injection port inside a GC oven. Use 530 μm, uncoated fused silica capillary tubing, or other appropriate narrow bore tubing, to connect the other end of the sample tube to a FID detector. Use 1/4 inch fittings with graphite ferrules to connect to the sample tube itself.

10.8.2.3 Set a nitrogen carrier gas flow of 50 mL/min through the tube.

10.8.2.4 Inject a 0.1 mL sample of the vapor phase standard onto the tube using a gas syringe. Adjust the GC oven temperature so that the analyte peak elutes on the FID between 1 and 20 minutes.

10.8.2.5 Repeat the experiment 4 or 5 times using different GC oven temperatures. Try to ensure that at each of the GC temperatures selected, the peak elutes within 1-20 minutes.

[Note: Use the time from injection to peak crest as the retention time. This may have to be measured manually, depending on the type of integrator available.]

10.8.2.6 Inject a sample of methane to measure the delay time of the system and subtract this from the analyte retention times determined.

10.8.2.7 Use the flow of nitrogen carrier gas and corrected retention times to calculate the analyte retention volumes at different sorbent temperatures.

10.8.2.8 A graph of $\log_{10}$ retention volume vs. 1/temp(K) should produce a straight line plot which can be readily extrapolated to ambient temperatures. Use this plot to obtain the retention volume.

A SSV for the analyte on that sorbent tube is then derived by halving the calculated retention volume at ambient temperature. When required, this experiment should be carried out for the least well retained compound(s) of interest.

10.9 Resealing Sorbent Tubes After Sample Collection

Sampled tubes should be recapped with the metal, Swagelok®-type caps and combined PTFE ferrules, rewrapped in the aluminum foil (if appropriate) and replaced in the storage container immediately after sampling. They should not be removed from the sampling container until they are in the laboratory and about to be analyzed.

10.10 Sample Storage

Samples should be refrigerated at <4°C in a clean environment during storage and analyzed within 30 days of sample collection (within one week for limonene, carene, *bis*-chloromethyl ether and labile sulfur or nitrogen-containing volatiles). Samples taken on tubes containing multiple sorbent beds should be analyzed as soon as possible after sampling unless it is know in advance that storage will not cause significant sample recovery errors (see also Section 7.1.3 concerning artifacts).

11. Analytical Procedure

11.1 Preparation for Sample Analysis

Follow the description given in Compendium Method TO-15 for set up of the GC/MS analytical system including column selection, MS tune requirements, calibration protocols, etc.

11.2 Predesorption System Checks and Procedures

The following sample and system integrity checks and procedures must be carried out manually or automatically before thermal desorption:

- **Dry purge**. Dry purge the batch of sampled, back-up and field blank tubes (do not purge lab blanks).
- **Cap**. Cap tubes with PTFE 'analytical' caps and place on instrument carousel.
- **Leak test the tubes**. Each tube must be stringently leak tested at the GC carrier gas pressure, without heat or gas flow applied, before analysis. Tubes which fail the leak test should not be analyzed, but should be resealed and stored intact. On automated systems, the instrument should continue to leak test and analyze subsequent tubes after a given tube has failed. Automated systems should also store a record of which tubes in a sequence have failed the leak test in battery-protected system memory until the error is acknowledged by an operator. These measures prevent sample losses and help ensure data quality.

- **Leak test the sample flow path**. All parts of the sample flow path should be stringently leak tested before each analysis without heat or gas flow applied to the sample tube. An automatic sequence of tube desorptions and GC analyses should be halted if any leak is detected in the main sample flow path.
- **Purge air**. Purge air from the tube and sample flow path at ambient temperature using carrier gas immediately before tube desorption. It helps to dry the sample and prevents analyte and sorbent oxidation thus minimizing artifact formation, ensuring data quality and extending tube lifetimes. The focusing trap should be in-line throughout the carrier gas purge to retain any ultra-volatile analytes "desorbed" from the tube prematurely.
- **Check GC/MS analytical system ready status**. The "ready" status of the GC, detector(s), data processor and all parts of the analytical system should be automatically checked by the thermal desorption device before each tube desorption. It should not be possible to desorb a tube into the analytical system if it is not ready to accept and analyze samples.
- **Internal standard**. Introduce a gas phase internal standard onto the sorbent tube or focusing trap before primary (tube) desorption, as an additional check of system integrity (optional).

A series of schematics illustrating these steps is presented in Figure 3, Steps (a) through (f).

11.3 Analytical Procedure

11.3.1 Steps Required for Reliable Thermal Desorption.

11.3.1.1 A stepwise summary of the complete thermal desorption procedure is as follows:

- Predesorption system checks (see Section 11.2).
- Introduction of a fixed volume gas phase internal standard (optional) [see Figure 3, Step (d)].
- Desorption of the sorbent tube (typically 200-300°C for 5-15 minutes with a carrier gas flow of 30-100 mL/min - see Table 2) and refocusing of the target analytes on a focusing trap held at near- ambient or subambient temperatures [see Figure 3, Step (e)].

[Note: Analytes should be desorbed from the tube in ?backflush" mode, i.e., with the gas flow in the reverse direction to that of the air flow during sampling].

- Splitting the sample as it is transferred from the tube to the focusing trap (Optional). This is only required to prevent column or detector overload due to excess water accumulation or during the analysis of high concentration/large volume air samples or when using ultra-sensitive detectors such as the ECD [see Figure 3, Step (e)].
- Rapid desorption of the focusing trap (typically 40 deg/sec. to a top temperature of 250-350°C, with a ?hold" time of 1-15 mins at the top temperature and an inert/carrier gas flow of 3-100 mL/min) and transfer of the analytes into the analytical column [see Figure 3, Step (f)].

[Note: Components should normally be desorbed from the focusing trap in ?backflush" mode, i.e., with the gas flow through the 'cold' trap in the reverse direction to that used during analyte focusing.]

- Splitting the sample as VOCs are transferred from the focusing trap to the analytical column. (Optional). This is only required to prevent column or detector overload due to excess water accumulation or during the analysis of high concentration/large volume air samples or when using ultra-sensitive detectors such as the ECD [See Figure 3, Step (f)].
- Desorbing the focusing trap initiates the GC run. [See Figure 3, Step (f)].

- All volatiles should be stripped from the sorbent tubes during the thermal desorption process leaving them clean and ready for reuse. The tubes should be resealed to ensure they are kept clean and ready for immediate reuse while the sequence of tube desorptions and analyses is completed.

11.3.2 GC/MS Analytical Procedure

11.3.2.1 Once the GC run has been initiated by desorption of the focusing trap, the chromatographic procedure continues as described in Compendium Method TO-15.

11.3.2.2 The precision of the analytical system should be tested using six standard tubes all loaded with a mid-concentration-range standard. This procedure should be carried out whenever the thermal desorption - GC/MS analytical method is changed and should be repeated once every tenth series of samples run with an analytical method or once every three months, whichever happens first. The report produced from the most recent precision test should be included with the final batch report generated for each series of samples.

12. Calibration of Response

Descriptions of how to load tubes from standard atmospheres, concentrated gas phase standards or liquid standards are given in Sections 9.2 and 9.3. Once the tubes are desorbed to the focusing trap and into the analytical GC/MS system the calibration procedure becomes identical to that presented in Section 3 of Compendium Method TO-15. The guidance given in Section 3 of Compendium Method TO-15 concerning multi-level calibration procedures and calibration frequencies should be followed for this Compendium method. It is also advisable to analyze a single level calibrant (i.e. tubes loaded with analyte masses in the mid-range of those expected to be collected during sampling) approximately every tenth sample during an analytical sequence, as a check on system performance. All samples processed that exceed the calibration range will require data qualifiers to be attached to the analytical results.

13. Quality Assurance

13.1 Validating the Sample Collection Procedure

13.1.1 Blanks.

13.1.1.1 Artifact levels on laboratory and field blanks should be at the low or sub-nanogram level for carbonaceous sorbents and Tenax® and at the double digit ng level for Porapaks®, Chromosorb® Century series sorbents and other porous polymers as described in Section 7.1. If artifact levels are considerably above this, careful attention must be paid to the tube conditioning and storage procedures described in Sections 10.2.1 and 10.2.2. Artifact peaks which are 10% or more of the area of average component peaks should be marked as artifacts in the final data reports. When monitoring unknown atmospheres, special care must be taken to distinguish between sorbent artifacts and analytes, using the MS to identify components which are significant in both blank and sampled tubes.

13.1.1.2 If the same profile/pattern of VOCs is observed on the field blanks as on the sampled tubes and if the level of these components is 5% or more of the sampled volatiles, careful attention must be paid to the method of sealing the tubes and other storage procedures in future studies. If the profile of volatiles on the field blanks matches that of the sampled tubes and if the areas of the peaks on the field blank are 10% or more of sampled tube levels, the sampled tube data are invalidated.

13.1.2 Routine Checking of Sorbent Tube Safe Sampling Volumes.

13.1.2.1 The SSVs of sorbent tubes should be retested annually or once every 20 uses (whichever happens first) using one of the procedures described in Section 10.8.

13.1.2.2 If the SSV of a tube (i.e., half the RV or two thirds of the BV) falls below the normal air sample collection volume for the analytes in question, the tube should be repacked with fresh adsorbent and reconditioned.

13.2 Performance Criteria for the Monitoring Pump

Records of the pump flow rate delivered against the pump flow rate, stroke rate or pressure selected on a pump should be reviewed at least once per three months. If the performance of any pump has been found to have changed significantly over that time; for example if completely different pump settings are required to deliver the same pump flow rate, the pump should be serviced by the manufacturer or their approved agent.

Sampling pump errors can normally be presumed to be in the order of 5% (8). If the pump sampling flow rate measured at the end of sample collection varies more than 10% from that measured at the beginning of sample collection, then that sample is invalidated.

14. Performance Criteria for the Solid Adsorbent Sampling of Ambient Air

14.1 Introduction

There are four performance criteria which must be met for a system to qualify under Compendium Method TO-17. These criteria closely parallel those of Compendium Method TO-15, *"The Determination of Volatile Organic Compounds (VOCs) in Air Collected in Specially Prepared Canisters and Analyzed by Gas Chromatography/Mass Spectrometry (GC/MS)"*. These criteria are:

- A method detection limit $\leq$0.5 ppb.
- Duplicate (analytical) precision within 20% on synthetic samples of a given target gas or vapor in a typical target gas or vapor mix in humidified zero air.
- Agreement within 25% for distributed volume pairs of tubes taken in each sampling set.
- Audit accuracy within 30 percent for concentrations normally expected in contaminated ambient air (0.5 to 25 ppb). Either mass spectrometry as emphasized here, or specific detectors can be used for analysis. Details for the determination of each of the criteria follow.

14.2 Method Detection Limit

The procedure chosen to define the method detection limit is that given in the Code of Federal Regulations (40CFR136 Appendix B). The method detection limit is defined for each system by making seven replicate measurements of a concentration of the compound of interest near the expected detection limit (within a factor of five), computing the standard deviation for the seven replicate concentrations, and multiplying this value by 3.14 (the Student's t value for 99 percent confidence for seven values).

14.3 Analytical Precision of Duplicate Pairs

The measure of analytical precision used for this method is the absolute value of the relative difference between two identical samples (same flow rate over the same time period from with a common inlet to the sample volume). The analytical precision is expressed as a percentage as follows:

$$\text{Analytical Precision} = \left(\frac{[|X1 - X2|]}{X} \right) 100$$

where:

X1 = A measurement value taken from one of the two tubes using in sampling.
X2 = A measurement value taken from the second of two tubes using in sampling.
X = Average of X1 and X2.

The analytical precision is a measure of the precision achievable for the entire sampling and analysis procedure including the sampling and thermal desorption process mentioned above and the analytical procedure that is same as the TO-15 analytical finish, although specific detector systems can also be used.

14.4 Precision for the Distributed Volume Pair

The measure of precision used for this method is the absolute value of the relative difference between the distributed volume pair expressed as a percentage as follows:

$$\text{percent difference} = \left(\frac{[|X1 - X2|]}{X} \right) 100$$

where:

X1 = One measurement value (e.g., for a defined sample volume of 1 L).
X2 = Duplicate measurement value (e.g., for a defined sample volume of 4 L taken over the same time period as the first sample).
X = Average of the two values.

There are several factors that may affect the precision of the measurement as defined above. In fact any factor that is nonlinear with sample volume may be significant enough to violate the constraint placed on distributed volume pair precision. These factors include artifact formation, compound reactions on the sorbent, breakthrough of target compounds, etc.

14.5 Audit Accuracy

A measure of audit accuracy is the degree of agreement with audit standards. Audit accuracy is defined as the relative difference between the measurement result and the nominal concentration of the audit compound:

$$\text{Audit Accuracy, \%} = \left[\frac{(\text{Spiked Value} - \text{Observed Value})}{(\text{Spiked Value})} \right] \text{x } 100$$

The choice of audit standard is left to the analyst.

15. References

1. Riggin, R. M., *Compendium of Methods for the Determination of Toxic Organic Compounds in Ambient Air: Methods TO-1 and TO-2,* U. S. Environmental Protection Agency, Research Triangle Park, NC 27711, EPA 600/4-84-041, April 1984.

2. Winberry, W. T. Jr., et al., *Compendium of Methods for the Determination of Toxic Organic Compounds in Ambient Air: Method TO-14, Second Supplement*, U. S. Environmental Protection Agency, Research Triangle Park, NC 27711, EPA 600/4-89-018, March 1989.

3. Schmidbauer, N., and Oehme, M., "Comparison of Solid Adsorbent and Stainless Steel Canister Sampling for Very Low ppt-concentrations of Aromatic Compounds ($\geq C_6$) in Ambient Air From Remote Areas," *Fresenius Z Anal. Chem.*, 331, pp 14-19, 1988.

4. Ciccioli, P., Brancaleoni, E., Cecinato, A., Sparapini, R., and Frattoni, M., "Identification and Determination of Biogenic and Anthropogenic VOCs in Forest Areas of Northern and Southern Europe and a Remote Site of the Himalaya Region by High-resolution GC-MS," *J. of Chrom.*, 643, pp 55-69, 1993.

5. Hafkenscheid, T., Peters, R., NMI, The Netherlands, Private Communications to E. Woolfenden of Perkin Elmer Corp., Norwalk, Conn.

6. Ciccioli, P., Brancaleoni, E., Cecinato, A., DiPalo, C., Brachetti, A., and Liberti, A., "GC Evaluation of the Organic Components Present in the Atmosphere at Trace Levels with the Aid of Carbopack™ B for Preconcentration of the Sample," *J.of Chrom.*, 351, pp 433-449, 1986.

7. MDHS 72 (Volatile Organic Compounds in Air), "Laboratory Method Using Pumped Solid Sorbent Tubes, Thermal Desorption and Gas Chromatography," *Methods for the Determination of Hazardous Substances (MDHS)*, UK Health and Safety Executive, Sheffield, UK.

8. Vandendriessche, S., and Griepink, B., "The Certification of Benzene, Toluene and m-Xylene Sorbed on Tenax TA in Tubes," *CRM-112 CEC, BCR, EUR12308 EN*, 1989.

9. Lindquist, F., and Balkeren, H., "Stability of Chlorinated Hydrocarbons on Tenax," CEC Commissioned Report From TNO, The Netherlands, Rpt. No. R90/268, 1990.

10. Bianchi, A. P., and Varney, M. S., "Sampling and Analysis of VOCs in Estuarine Air by GC-MS," *J. of Chrom.*, 643, pp 11-23, 1993.

11. Tipler, A., "Water Management in Capillary Gas Chromatographic Air Monitoring Systems," in *Proceedings of the Air and Waste Management Association Conference: Measurement of Toxic and Related Air Pollutants*, Air and Waste Management Association, Pittsburgh, PA, May 1994.

12. Helmig, D. and Vierling, L., "Water Adsorption Capacity of the Solid Adsorbents Tenax TA, Tenax GR, Carbotrap, Carbotrap™ C, Carbosieve™ SIII and Carboxen™ 569 and Water Management Techniques for the Atmospheric Sampling of Volatile Organic Trace Gases," *Anal. Chem.*, Vol. 67, No 23, pp 4380-4386, 1995.

13. McClenny, W. A., Oliver, K. D. and Daughtrey, E. H., Jr. "Analysis of VOCs in Ambient Air Using Multisorbent Packings for VOC Accumulation and Sample Drying," *J. Air and Waste Management Assoc.*, Vol 45, pp 792-800, 1995.

14. Pankow, J. G., "Technique for Removing Water from Moist Headspace and Purge Gases Containing Volatile Organic Compounds: Application in the Purge with Whole-column Cryotrapping (P/WCC) Method," *Environ. Sci. Technol.*, Vol 25, pp 123-126, 1991.

15. Harper, M., "Evaluation of Solid Sorbent Sampling Methods by Breakthrough Volume Studies," *Ann. Occup. Hyg.*, pp 65-88, 1993.

16. Pollack, A. J., Gordon, S. M., Moschandreas, D. J., McClenny, W. A., and Mulik, J. D., "Evaluation of Portable Multisorbent Air Samplers for Use with an Automated Multitube Analyzer." Project Rpt by Battelle Columbus Operations for U. S. Environmental Protection Agency, Contract No. 68-D0-0007, Sept 1992.

17. Broadway, G. M., and Trewern, T., "Design Considerations for the Optimization of a Packed Thermal Desorption Cold Trap for Capillary Gas Chromatography," *Proc. 13th Int'l Symposium on Capil. Chrom.*, Baltimore, MD, pp 310-320, 1991.

18. Broadway, G. M., "An Automated System for use Without Liquid Cryogen for the Determination of VOC's in Ambient Air," *Proc. 14th Int'l. Symposium on Capil. Chrom.*, Baltimore, MD, 1992.

19. Gibitch, J., Ogle, L., and Radenheimer, P., "Analysis of Ozone Precursor Compounds in Houston, Texas Using Automated Continuous GCs," in *Proceedings of the Air and Waste Management Association Conference: Measurement of Toxic and Related Air Pollutants*, Air and Waste Management Association, Pittsburgh, PA, May 1995.

20. MDHS 2 (Acrylonitrile in Air), "Laboratory Method Using Porous Polymer Adsorption Tubes, and Thermal Desorption with Gas Chromatographic Analysis," *Methods for the Determination of Hazardous Substances (MDHS)*, UK Health and Safety Executive, Sheffield, UK.

21. MDHS 22 (Benzene in Air), "Laboratory Method Using Porous Polymer Adsorbent Tubes, Thermal Desorption and Gas Chromatography," *Method for the Determination of Hazardous Substances (MDHS)*, UK Health and Safety Executive, Sheffield, UK.

22. MDHS 23 (Glycol Ether and Glycol Acetate Vapors in Air), "Laboratory Method Using Tenax Sorbent Tubes, Thermal Desorption and Gas Chromatography," *Method for the Determination of Hazardous Substances (MDHS)*, UK Health and Safety Executive, Sheffield, UK.

23. MDHS 40 (Toluene in air), "Laboratory Method Using Pumped Porous Polymer Adsorbent Tubes, Thermal Desorption and Gas Chromatography," *Method for the Determination of Hazardous Substances (MDHS)*, UK Health and Safety Executive, Sheffield, UK.

24. MDHS 60 (Mixed Hydrocarbons (C_3 to C_{10}) in Air), "Laboratory Method Using Pumped Porous Polymer and Carbon Sorbent Tubes, Thermal Desorption and Gas Chromatography," *Method for the Determination of Hazardous Substances (MDHS)*, UK Health and Safety Executive, Sheffield, UK.

25. Price, J. A., and Saunders, K. J., "Determination of Airborne Methyl Tert-butyl Ether in Gasoline Atmospheres," *Analyst*, Vol. 109, pp. 829-834, July 1984.

26. Coker, D. T., van den Hoed, N., Saunders, K. J., and Tindle, P. E., "A Monitoring Method for Gasoline Vapour Giving Detailed Composition," *Ann. Occup, Hyg.*, Vol 33, No. 11, pp 15-26, 1989.

27. DFG, "Analytische Methoden zur prufing gesundheitsschadlicher Arbeistsstoffe," *Deutsche Forschungsgemeinschaft*, Verlag Chemie, Weinheim FRG, 1985.

28. NNI, "Methods in NVN Series (Luchtkwaliteit; Werkplekatmasfeer)," Nederlands Normailsatie - Institut, Delft, The Netherlands, 1986-88.

29. "Sampling by Solid Adsorption Techniques," *Standards Association of Australia Organic Vapours*, Australian Standard 2976, 1987.

30. Woolfenden, E. A., "Monitoring VOCs in Air Using Pumped Sampling onto Sorbent Tubes Followed by Thermal Desorption-capillary GC Analysis: Summary of Reported Data and Practical Guidelines for Successful Application," *J. Air and Waste Management Assoc.*, Vol. 47, 1997, pp. 20-36.

31. Brown, R. H., and Purnell, C. J., "Collection and Analysis of Trace Organic Vapour Pollutants in Ambient Atmospheres: The Performance of a Tenax-GC Adsorbent Tube," *J. of Chrom.*, Vol 178, pp 79-90, 1979.

32. Walling, J. F., "The Utility of Distributed Air Volume Sets When Sampling Ambient Air Using Solid Adsorbents," *Atmos. Environ.*, Vol 18, No 4, 855-859, 1984.

33. Walling, J. F., Berkley, R. E., Swanson, D. H. and Toth, F. J., "Sampling Air for Gaseous Organic Chemical Using Solid Adsorbents: Application to Tenax," U. S. Environmental Protection Agency, Research Triangle Park, NC 27711, EPA 600/5-82-059, May 1982.

TABLE 1. GUIDELINES FOR SORBENT SELECTION

Sample Tube Sorbent	Approx. Analyte Volatility Range	Max. Temp., (°C)	Specific Surface Area, (m^2/g)	Example Analytes
CarbotrapC® CarbopackC® Anasorb® GCB2	n-C_8 to n-C_{20}	>400	12	Alkyl benzenes and aliphatics ranging in volatility from n-C to n-C .
Tenax® TA	bp 100°C to 400°C n-C_7 to n-C_{26}	350	35	Aromatics except benzene, Apolar components (bp>100°C) and less volatile polar components (bp>150 °C).
Tenax GR	bp 100°C to 450°C n-C_7 to n-C_{30}	350	35	Alkyl benzenes, vapor phase PAHs and PCBs and as above for Tenax TA.
Carbotrap® CarbopackB® Anasorb® GCB1	(n-C_4) n-C_5 to n-C_{14}	>400	100	Wide range of VOCs inc., ketones, alcohols, and aldehydes (bp>75°C) and all apolar compounds within the volatility range specified. Plus perfluorocarbon tracer gases.
Chromosorb® 102	bp 50°C - 200°C	250	350	Suits a wide range of VOCs incl. oxygenated compounds and haloforms less volatile than methylene chloride.
Chromosorb 106	bp 50°C - 200°C	250	750	Suits a wide range of VOCs incl. hydrocarbons from n-C to n-C . Also good for volatile oxygenated compounds
Porapak Q	bp 50°C - 200°C n-C_5 to n-C_{12}	250	550	Suits a wide range of VOCs including oxygenated compounds.
Porapak N	bp 50°C - 150°C n-C_5 to n-C_8	180	300	Specifically selected for volatile nitriles; acrylonitrile, acetonitrile and propionitrile. Also good for pyridine, volatile alcohols from EtOH, MEK, etc.
Spherocarb*	-30°C - 150°C C_3 to n-C_8	>400	1,200	Good for very volatile compounds such as VCM, ethylene oxide, CS and CH Cl . Also good for volatile polars e.g. MeOH, EtOH and acetone.
Carbosieve SIII*® Carboxen 1000*® Anasorb® CMS*	-60°C to 80°C	400	800	Good for ultra volatile compounds such as C C hydrocarbons, volatile haloforms and freons.
Zeolite Molecular Sieve 13X**	-60°C to 80°C	350		Used specifically for 1,3- butadiene and nitrous oxide.
Coconut Charcoal* (Coconut charcoal is rarely used)	-80°C to 50°C	>400	>1,000	Rarely used for thermal desorption because metal content may catalyze analyte degradation. Petroleum charcoal and Anasorb® 747 are used with thermal desportion in the EPA's volatile organic sampling train (VOST), Methods 0030 and 0031.

* These sorbents exhibit some water retention. Safe sampling volumes should be reduced by a factor of 10 if sampling a high (>90%) relative humidity.
** Significantly hydrophilic. Do not use in high humidity atmospheres unless silicone membrane caps can be fitted for diffusive monitoring purposes.
CarbotrapC™, CarbopackC™, CarbopackB™, Carboxen™ and Carbosieve SIII™ are all trademarks of Supelco, Inc., USA; Tenax® is a trademark of Enka Research Institute; Chromosorb® is a trademark of Manville Corp.; Anasorb® is a trademark of SKC, Inc.; Porapak® is a trademark of Waters Corporation.

TABLE 2. GUIDELINES FOR SORBENT USE

Sample Tube Sorbent	Maximum Temp., (°C)	Hydro-phobic (?)	Temp. and Gas Flow for Conditioning	Temp. and Min. Gas Flow for Desorption	Recommended Focusing Trap Packing
CarbotrapC® CarbopackC® Anasorb® GCB2	>400	Yes	350°C and 100 mL/min	325°C and 30 mL/min	Tenax® or Carbopack C®
Tenax® TA	350	Yes	330°C and 100 mL/min	300°C and 30 mL/min	Tenax®
Tenax GR	350	Yes	330°C and 100 mL/min	300°C and 30 mL/min	Tenax®
Carbotrap® CarbopackB® Anasorb® GCB1	>400	Yes	350°C and 100 mL/min	325°C and 30 mL/min	Tenax or Carbopack B®
Chromosorb® 102	250	Yes	250°C and 100 mL/min	225°C and 30 mL/min	Dual-bed CB plus CMS trap or Chrom. 102
Chromosorb 106	250	Yes	250°C and 100 mL/min	250°C and 30 mL/min	Dual-bed CB plus CMS trap or Chrom. 106
Porapak Q	250	Yes	250°C and 100 mL/min	225°C and 30 mL/min	Dual-bed CB plus CMS trap or Porapak Q
Porapak N	180	Yes	180°C and 100 mL/min	180°C and 30 mL/min	Dual-bed CB plus CMS trap or Porapak N
Spherocarb*	>400	No	400°C and 100 mL/min	390°C and 30 mL/min	Dual-bed CB plus CMS trap or Spherocarb
CMS such as CSIII*® Carboxen 1000*® Anasorb® CMS*	400	No	350°C and 100 mL/min	325°C and 30 mL/min	Dual-bed CB plus CMS trap or CMS alone
Zeolite Molecular Sieve 13X**	350	No	330°C and 100 mL/min	300°C and 30 mL/min	Dual-bed CB plus CMS trap or CMS alone
Tenax / CB : comb. Tube Type 1 (see Sect. 9.1.3)	350	Yes	330°C and 100 mL/min	300°C and 30 mL/min	Tenax
Carb B / CMS* comb. Tube Type 2 (see Sect. 9.1.3)	400	No	350°C and 100 mL/min	325°C and 30 mL/min	Dual-bed CB plus CMS trap
Carb. 300 type*, comb. Tube Type 3 (see Sect. 9.1.3)	400	No	350°C and 100 mL/min	325°C and 30 mL/min	Dual-bed CB plus CMS trap

* These sorbents exhibit some water retention. Safe sampling volumes should be reduced by a factor of 10 if sampling a high (>90%) relative humidity.
** Significantly hydrophilic. Do not use in high humidity atmospheres unless silicone membrane caps can be fitted for diffusive monitoring purposes.

CB is short for Carbopack B and CMS is short for carbonized molecular sieve.

CarbotrapC™, CarbopackC™, CarbopackB™, Carboxen™ and Carbosieve SIII™ are all trademarks of Supelco, Inc., USA; Tenax® is a trademark of Enka Research Institute; Chromosorb® is a trademark of Manville Corp.; Anasorb® is a trademark of SKC, Inc.; Porapak® is a trademark of Waters Corporation.

TABLE 3 - LIST OF COMPOUNDS WITH BREAKTHROUGH VOLUMES >5L USING THE AIR TOXICS TUBE STYLE 2 LISTED IN SECTIONS 6.1.2 AND 9.1.3 OF COMPENDIUM METHOD TO-17

*[Note: The following list of compounds was determined to have breakthrough volumes of greater than 5 liters of trace levels in humidified zero air for humidities of 20%, 65% and 90% RH at 25°C. The tests were performed immediately prior to the publication of this document at the Research Triangle Institute, Research Triangle Park, NC as a result of activities leading up to the publication of this document. Compounds with an * were not tested at 90% RH.]*

Halocarbon 114
1,3,5-Trimethylbenzene
Halocarbon 11
1,2,4-Trimethylbenzene
Halocarbon 113
Dichlorobenzenes
1,1-Dichloroethene
1,2,4-Trichlorobenzene
Methylene Chloride
Hexachloro-1,3,-butadiene
1,1 Dichloroethane
*1,3 Butadiene
cis-1,2-Dichloroethene
*Acetonitrile
Chloroform
*Acetone
1,1,1-Trichloroethane
*2-Propanol
Carbon tetrachloride
*Acrylonitrile
Benzene
*Isoprene
1,2-Dichloroethane
*Methyl Acetate
Trichloroethene
*Methyl tert-Butyl Ether
1,2-Dichloropropane
*Methyl Ethyl Ketone
cis-1,3-Dichloropropene
*Ethyl Acrylate
Toluene
*Methyl Acrylate
Trans-1,3-Dichloropropene
*Methyl Isobutyl Ketone
*Furfural
Tetrachloroethene
1,2-Dibromoethane
Chlorobenzene
Ethylbenzene
m-Xylene
p-Xylene
o-Xylene
1,1,2,2-Tetrachloroethane

TABLE 4. MASS OF AN ANALYTE 'X' COLLECTED FROM 1, 2 OR 10 L AIR SAMPLES AT DIFFERENT ATMOSPHERIC CONCENTRATIONS (ASSUMING 'X' HAS A MOLAR WEIGHT OF 100 g)

Sample type	Typical concentration	Mass collected in 1 L sample volume	Mass collected in 2 L sample volume	Mass collected in 10 L sample volume
Fenceline/severe urban area	10-250 ppb	40-1,000 ng	80 ng-2 μg	0.4-10μg
Indoor air sampling	1-100 ppb	4-400 ng	8-800 ng	40 ng-4μg
Avg. exposure to benzene	~3 ppb	11 ng	22 ng	110 ng
Normal urban area	1-10 ppb	4-40 ng	8-80 ng	40-400 ng
Normal rural area	0.1-1 ppb	0.4-4 ng	0.8-8 ng	4-40 ng
Forested area	0.25-2.5 ppb	1-10 ng	2-20 ng	10-100 ng
Mt. Everest/K2 site	0.025-7.5 ppb	0.1-30 ng	0.2-60 ng	1-300 ng
Arctic on an ultraclean day	15-50 ppt	60-200 pg	0.12-0.4 ng	0.6-2 ng

COMPENDIUM METHOD TO-17
FIELD TEST DATA SHEET (FTDS)

I. GENERAL INFORMATION

PROJECT:_____ DATE(S) SAMPLED:_____
SITE:_____ TIME PERIOD SAMPLED:_____
LOCATION:_____ OPERATOR:_____
INSTRUMENT MODEL NO.:_____ CALIBRATED BY:_____
PUMP SERIAL NO.:_____ RAIN: ____YES _____NO

ADSORBENT CARTRIDGE INFORMATION:

	Tube 1	Tube 2
Type:	_____	_____
Adsorbent:	_____	_____
Serial No.:	_____	_____
Sample No.:	_____	_____

II. SAMPLING DATA

Tube Identification	Sampling Location	Ambient Temp., °F	Ambient Pressure, in Hg	Flow Rate (Q), mL/min		Sampling Period		Total Sampling Time, min.	Total Sample Volume, L
				Tube 1	Tube 2	Start	Stop		

III. FIELD AUDIT

	Tube 1	Tube 2
Audit Flow Check Within 10% of Set Point (Y/N)?	_ pre- _____ post-	_ pre- _____ post-

CHECKED BY:_____
DATE:_____

Figure 1. Compendium Method TO-17 Field Test Data Sheet.

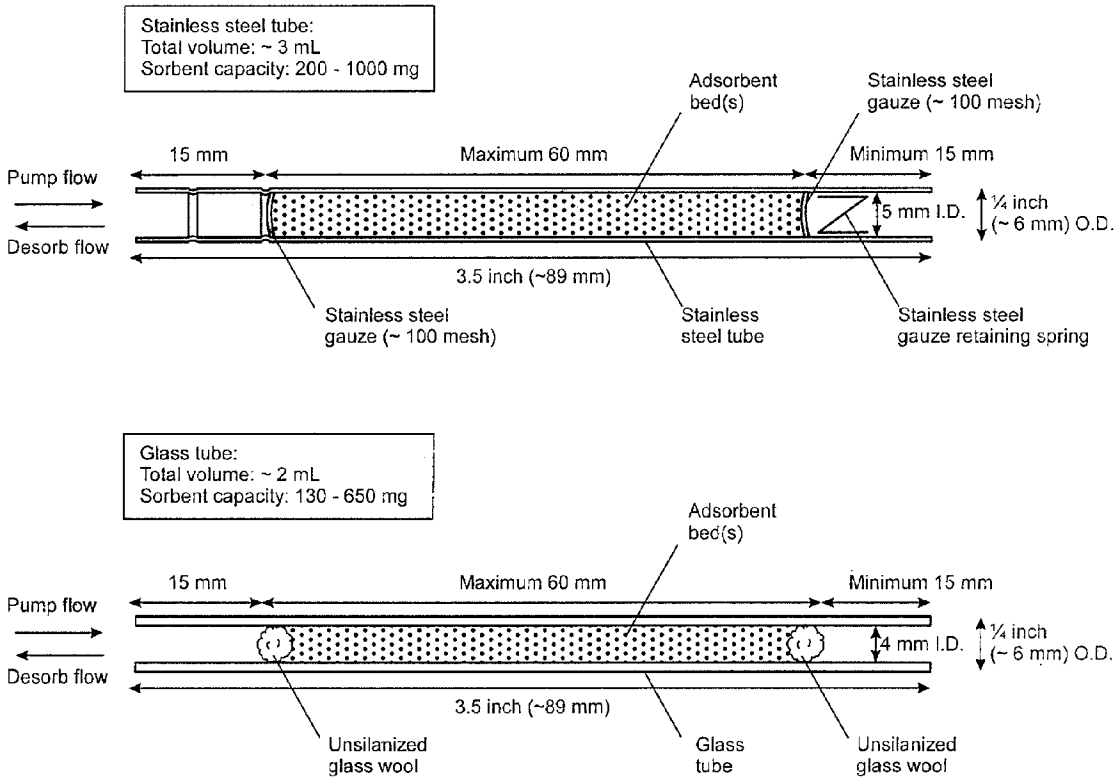

Figure 2. Example of construction of commercially available adsorbent tubes.

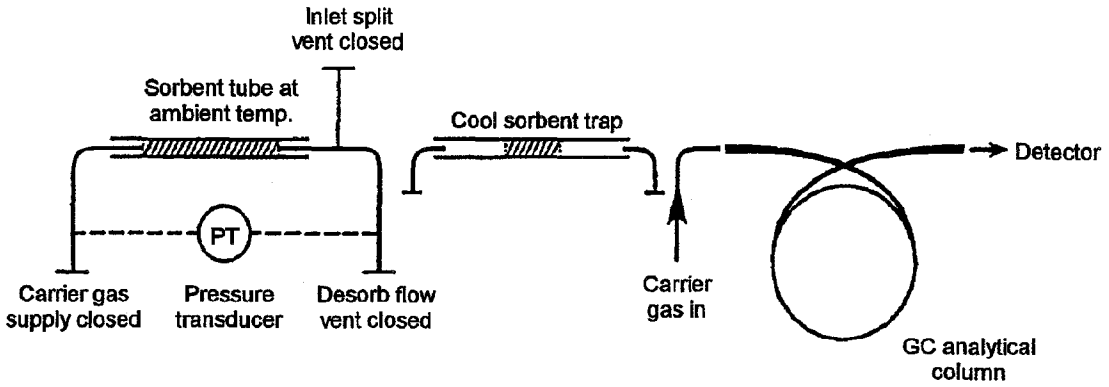

(a) Tube leak check.

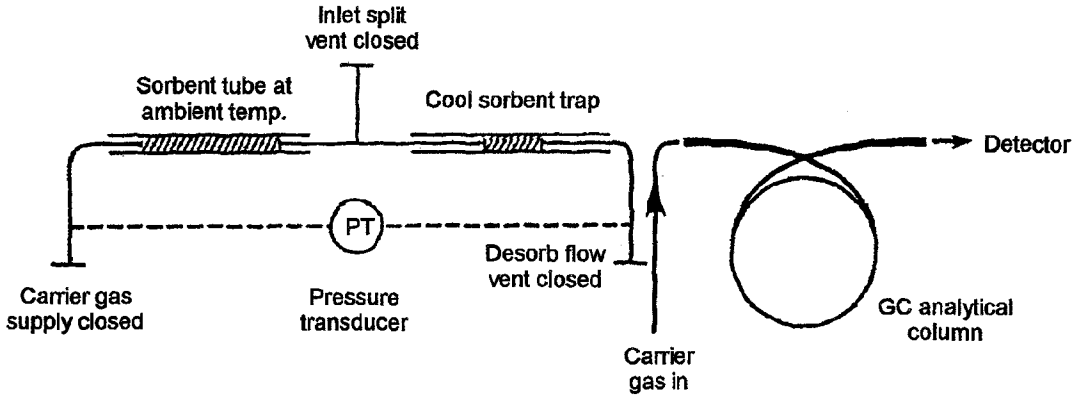

(b) Leak check sample flow path.

Figure 3. Sequence of operations to thermally desorb the sample from the sorbent tube and transfer to the gas chromatograph: (a) tube leak test and (b) leak check flow path.

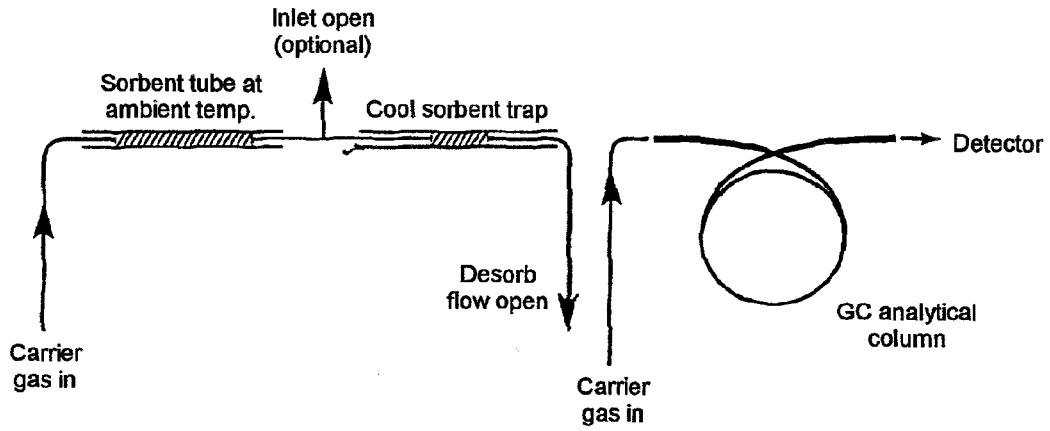

(c) Purge to remove air.

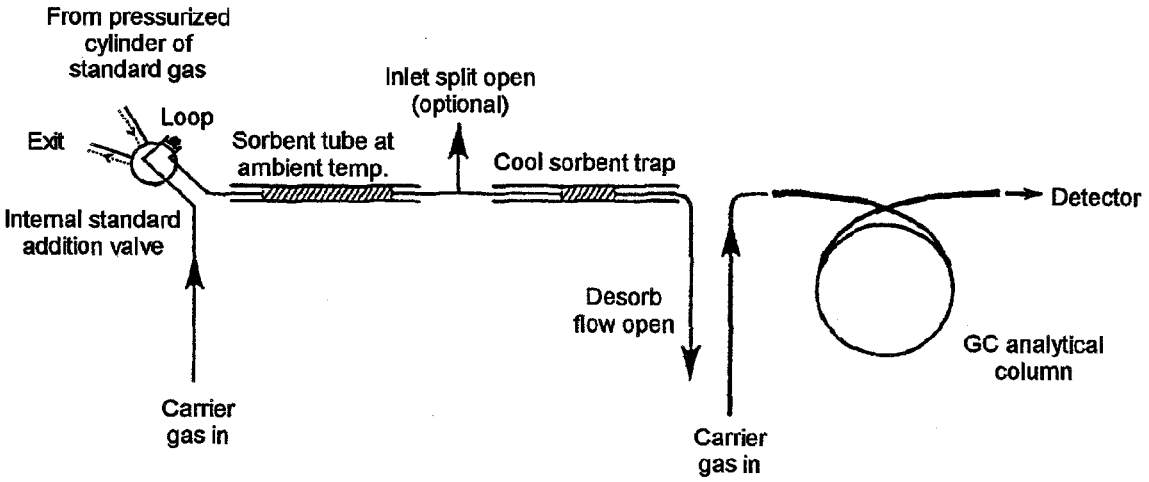

(d) Gas phase internal standard addition to sample tube.

Figure 3 (cont). Sequence of operations to thermally desorb the sample from the sorbent tube and transfer to the gas chromatograph: (c) purge to remove air and (d) gas phase internal standard addition to sample tube.

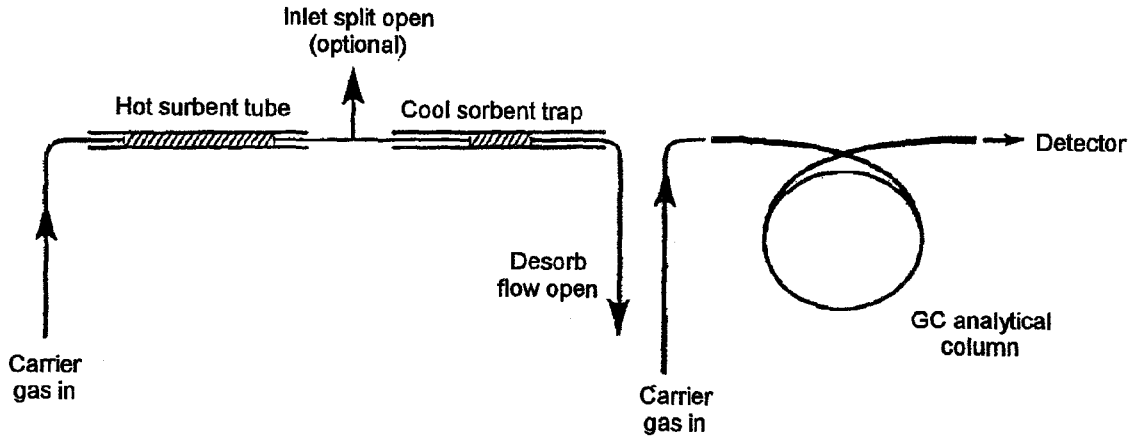

(e) Primary (tube) desorption.

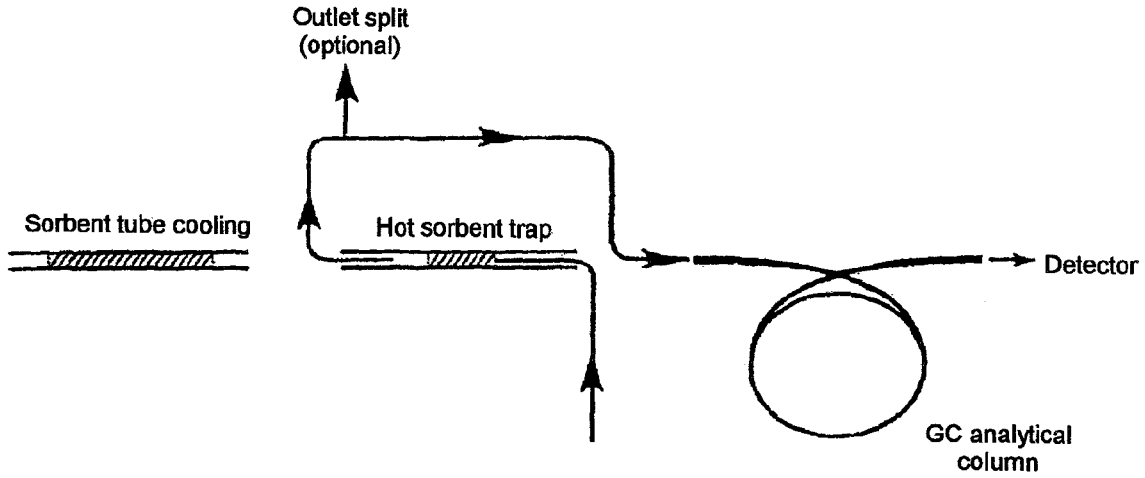

(f) Secondary (trap) desorption.

Figure 3 (cont). Sequence of operations to thermally desorb the sample from the sorbent tube and transfer to the gas chromatograph: (e) primary (tube) desorption and (f) secondary (trap) desorption.

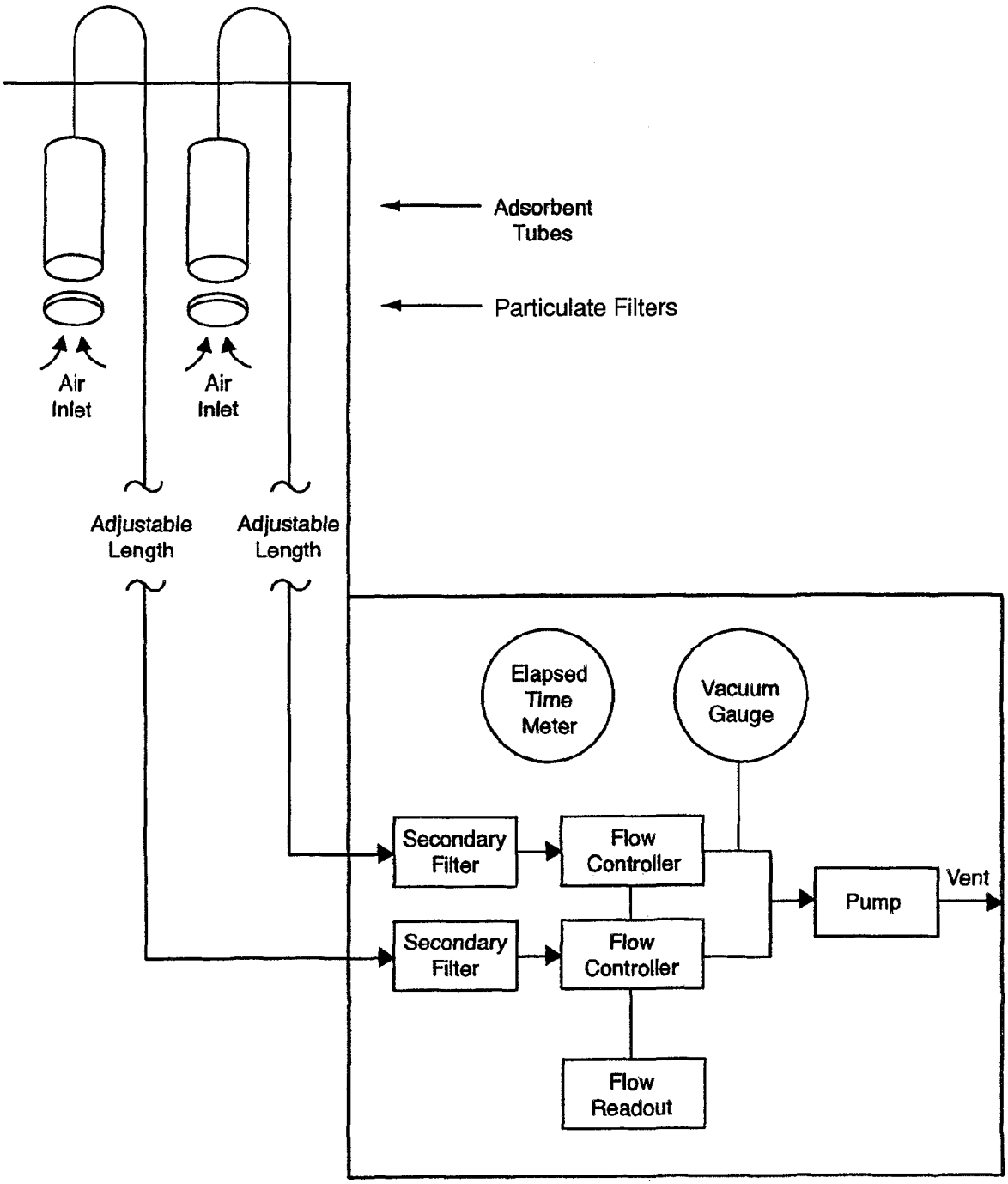

Figure 4. Example of distributive air volume using adsorbent tube technology.

APPENDIX 1.

The following list includes safe sampling volume data generated by the UK Health and Safety Executive (4) on single sorbent bed 1/4 inch O.D. stainless steel tubes and compatible with a thermal desorption - capillary GC analytical procedure. It is provided as a resource to readers only. The recommendation for Tube Style 2 is based on the specific tube referenced in Section 6.1.2 and Table 3. Where tubes are not listed with safe sample volumes they have not been tested and their inclusion represents a suggestion only. Application to air sampling is subject to criteria listed in Section 14 of Compendium Method TO-17.

[Note: Combination tubes 1, 2, and 3 referenced in this Appendix are those adsorbent tubes described in Section 9.1.3.]

Compound	Suitable sorbents and SSV's where available
Hydrocarbons	
This procedure is suitable for all aliphatic, aromatic and cyclic hydrocarbons less volatile than ethane and more volatile than n-C20. These include:	
n-Butane	CS III, C 1000, Combination Tubes 2 or 3 or Spherocarb (SSV 820L).
n-Pentane	CS III, C 1000, Spherocarb (SSV 30,000L), Combination Tubes 2 or 3 or Chromosorb 106 (SSV 5.5L).
n-Hexane	Carbopack™ B, Combination Tubes 1, 2, 3 or Chromosorb 106 (SSV 30L).
Benzene	Carbopack™ B, Combination Tubes 1, 2, 3 or Chromosorb 106 (SSV 26L) or Tenax (SSV 6L).
n-Heptane	Carbopack™ B, Tenax (SSV 17L), Combination Tubes 1, 2, 3 or Chromosorb 106 (SSV 160L).
Toluene	Carbopack™ B, Tenax (SSV 38L), Combination Tubes 1, 2, 3 or Chromosorb 106 (SSV 80L).
n-Octane	Carbopack™ B, Tenax (SSV 700L) Combination Tubes 1, 2, 3 or Chromosorb 106 (SSV 1000L).
Ethylbenzene	Carbopack™ B, Tenax (SSV 180L), Combination Tubes 1, 2, 3 or Chromosorb 106 (SSV 360L).
all Xylenes	Carbopack™ B, Tenax (SSV 300L), Combination Tubes 1, 2, 3 or Chromosorb 106 (SSV 770L).
n-Nonane	Carbopack™ C/B, Tenax (SSV 700L), Combination Tubes 1, 2 or 3 or Chromosorb 106 (SSV 7000L).
Styrene	Carbopack™ C/B, Tenax (SSV 300L) or Combination Tubes 1, 2 or 3.
Isopropylbenzene	Carbopack™ C/B, Tenax (SSV 480L) or Combination Tubes 1, 2 or 3.
n-Propylbenzene	Carbopack™ C/B, Tenax (SSV 850L) or Combination Tubes 1, 2 or 3.
1-Methyl-3-ethylbenzene	Carbopack™ C/B, Tenax (SSV 1000L) or Combination Tubes 1, 2 or 3.
1-Methyl-4-ethylbenzene	Carbopack™ C/B, Tenax (SSV 1000L) or Combination Tubes 1, 2 or 3.

Compound	Suitable sorbents and SSV's where available
1,3,5-Trimethylbenzene	Carbopack™ C/B, Tenax (SSV 1800L), Combination Tubes 1, 2 or 3 or Chromosorb 106 (SSV 2800).
Methylstyrene	Carbopack™ C/B, Tenax (SSV 1200L) or Combination Tubes 1, 2 or 3.
Methyl-2-ethylbenzene	Carbopack™ C/B, Tenax (SSV 1000L) or Combination Tubes 1, 2 or 3.
1,2,4-Trimethylbenzene	Carbopack™ C/B, Tenax (SSV 1800L) or Combination Tubes 1, 2 or 3.
n-Decane	Carbopack™ C/B, Tenax (SSV 2100L), Combination Tubes 1, 2 or 3 or Chromosorb 106 (SSV 37,000L).
1,2,3-Trimethylbenzene	Carbopack™ C/B, Tenax (SSV 1800L) or Combination Tubes 1, 2 or 3.
n-Undecane	Carbopack™ C/B, Tenax (SSV 12,000L) or Combination Tubes 1, 2 or 3.
n-Dodecane	Carbopack™ C, Tenax (SSV 63,000L) or Combination Tubes 1 or 3.

Halogenated Hydrocarbons including PCBs

This procedure is suitable for all aliphatic, aromatic and cyclic halogenated hydrocarbons more volatile than n-C20. Examples include:

Dichloromethane	CS III, C 1000, Spherocarb (SSV 200L) or Combination Tubes 2 or 3.
1,2-Dichloroethane	CS III, C 1000, Spherocarb, Chrom. 106 (SSV 17L), Carbopack™ B, Tenax (SSV 5.4L) or Combination Tubes 1, 2 or 3.
1,1,1-Trichloroethane	Spherocarb (SSV 8,000L), Chrom. 106 (SSV 8L), Carbopack™ B, or Combination Tubes 1, 2 or 3.
Carbontetrachloride	Chrom. 106 (SSV 22L), Carbopack™ B, Tenax (SSV 6.2L) or Combination Tubes 1, 2 or 3.
Trichloroethylene	Chrom. 106, Carbopack™ B, Tenax (SSV 5.6L) or Combination Tubes 1, 2 or 3.
1,1,2-Trichloroethane	Chrom. 106, Carbopack™ B, Tenax (SSV 34L) or Combination Tubes 1, 2 or 3.
Tetrachloroethylene	Chrom. 106, Carbopack™ B, Tenax (SSV 48L) or Combination Tubes 1, 2 or 3.
Chlorobenzene	Chrom. 106, Carbopack™ B, Tenax (SSV 26L) or Combination Tubes 1, 2 or 3.
1,1,1,2-Tetrachloroethane	Chrom. 106, Carbopack™ B, Tenax (SSV 78L) or Combination Tubes 1, 2 or 3.
1,1,2,2-Tetrachloroethane	Chrom. 106, Carbopack™ B, Tenax (SSV 170L) or Combination Tubes 1, 2 or 3.

Compound	Suitable sorbents and SSV's where available

Alcohols

This procedure is suitable for alcohols more volatile than n-C20 and sufficiently stable to be analyzed by conventional GC techniques. Examples include:

Methanol	CSIII, C1000, Spherocarb (SSV 130L) or Combination Tubes 2 or 3.
Ethanol	CSIII, C1000, Spherocarb (SSV 3500L) or Combination Tubes 2 or 3.
n-Propanol	Porapak N (SSV 20L), Chrom 106 (SSV 8L), Carbopack™ B or Combination Tubes 1, 2 or 3.
Isopropanol	Chrom 106 (SSV 44L), Carbopack™ B or Combination Tubes 1, 2 or 3.
n-Butanol	Chrom 106 (SSV 50L), Carbopack™ B, Porapak N (SSV 5L), Tenax (SSV 5L) or Combination Tubes 1, 2 or 3.
iso-Butanol	Chrom 106 (SSV 30L), Carbopack™ B, Tenax (SSV 2.8L) or Combination Tubes 1, 2 or 3.
Octanol	Tenax (SSV 1400L), Carbopack™ C or Combination Tubes 1 or 3.

Esters and Gycol Ethers

This procedure is suitable for all esters and glycol ethers more volatile than n-C20 and sufficiently stable to be analyzed by conventional GC techniques. Examples include:

Methylacetate	Chromosorb 106 (SSV 2.6L), Carbopack™ B or Combination Tubes 1, 2 or 3.
Ethylacetate	Chromosorb 106 (SSV 20L), Carbopack™ B, Tenax (SSV 3.6L) or Combination Tubes 1, 2 or 3.
Propylacetate	Chromosorb 106 (SSV 150L), Carbopack™ B, Tenax (SSV 18L) or Combination Tubes 1, 2 or 3.
Isopropylacetate	Chromosorb 106 (SSV 75L), Carbopack™ B, Tenax (SSV 6L) or Combination Tubes 1, 2 or 3.
Butylacetate	Chromosorb 106 (SSV 730L), Carbopack™ B, Tenax (SSV 85L) or Combination Tubes 1, 2 or 3.
Isobutylacetate	Chromosorb 106 (SSV 440L), Carbopack™ B, Tenax (SSV 130L) or Combination Tubes 1, 2 or 3.
Methyl-t-butyl ether	Chromosorb 106 (SSV >6L), Carbopack™ B or Combination Tubes 1, 2 or 3.
t-Butylacetate	Chromosorb 106 (SSV 160L), Carbopack™ B or Combination Tubes 1, 2 or 3.
Methylacrylate	Chromosorb 106, Carbopack™ B, Tenax (SSV 6.5L) or Combination Tubes 1, 2 or 3.

Compound	Suitable sorbents and SSV's where available
Ethylacrylate	Chromosorb 106, Carbopack™ B, Tenax (SSV 60L) or Combination Tubes 1, 2 or 3.
Methylmethacrylate	Chromosorb 106, Carbopack™ B, Tenax (SSV 27L) or Combination Tubes 1, 2 or 3.
Methoxyethanol	Chromosorb 106 (SSV 5L), Carbopack™ B, Tenax (SSV 3L) or Combination Tubes 1, 2 or 3.
Ethoxyethanol	Chromosorb 106 (SSV 75L), Carbopack™ B, Tenax (SSV 5L) or Combination Tubes 1, 2 or 3.
Butoxyethanol	Chromosorb 106, Carbopack™ B, Tenax (SSV 35L) or Combination Tubes 1, 2 or 3.
Methoxypropanol	Chromosorb 106, Carbopack™ B, Tenax (SSV 13L) or Combination Tubes 1, 2 or 3.
Methoxyethylacetate	Chromosorb 106 (SSV 860L), Carbopack™ B, Tenax (SSV 8L) or Combination Tubes 1, 2 or 3.
Ethoxyethylacetate	Chromosorb 106 (SSV 4000L), Carbopack™ B, Tenax (SSV 15L) or Combination Tubes 1, 2 or 3.
Butoxyethylacetate	Chromosorb 106, Carbopack™ B, Tenax (SSV 150L) or Combination Tubes 1, 2 or 3.

Aldehydes and Ketones

This procedure is suitable for all aldehydes and ketones more volatile than n-C20 and sufficiently stable to be analyzed using conventional GC techniques. Examples include:

Acetone	CSIII, C1000, Spherocarb, Chrom 106 (SSV 1.5L) or Combination Tubes 2 or 3.
Methylethylketone (2-butanone)	Chromosorb 106 (SSV 10L), Tenax (SSV 3.2L), Porapak N (SSV 50L) Carbopack™ B or Combination Tubes 1, 2 or 3.
n-Butanal	Chromosorb 106, Carbopack™ B, Porapak N (SSV 50L) or Combination Tubes 1, 2 or 3.
Methylisobutylketone	Chromosorb 106 (SSV 250L), Tenax (SSV 26L), Carbopack™ B or Combination Tubes 1, 2 or 3.
Cyclohexanone	Chromosorb 106, Tenax (SSV 170L), Carbopack™ B or Combination Tubes 1, 2 or 3.
3,5,5-Trimethylcyclohex-2-enone	Tenax (SSV 5600L), Carbopack™ B or Combination Tubes 1 or 3.
Furfural	Tenax (SSV 300L), Carbopack™ B or Combination Tubes 1, 2 or 3.

Compound	Suitable sorbents and SSV's where available

Miscellaneous VOCs

This procedure is suitable for the analysis of most VOCs in air. It is generally compatible with all organics less volatile than ethane, more volatile than n-C20 and sufficiently stable to be analyzed using conventional GC techniques. Examples include:

Acetonitrile	Porapak N (SSV 3.5L), CSIII, C1000 or Combination Tubes 2 or 3.
Acrylonitrile	Porapak N (SSV 8L), Carbopack™ B or Combination Tubes 1, 2 or 3.
Propionitrile	Porapak N (SSV 11L), Carbopack™ B or Combination Tubes 1, 2 or 3.
Maleic anhydride[a]	Tenax (SSV 88L), Chrom. 106, Carbopack™ B or Combination Tubes 1, 2 or 3.
Pyridine	Tenax (SSV 8L), Porapak N (SSV 200L) Chrom. 106, Carbopack™ B or Combination Tubes 1, 2 or 3.
Aniline	Tenax (SSV 220L), Chrom. 106, Carbopack™ B or Combination Tubes 1, 2 or 3.
Nitrobenzene	Tenax (SSV 14,000L) Carbopack™ C or Combination Tubes 1 or 3.
Acetic acid	Porapak N (SSV 50L), Carbotrap™ B or Combination Tubes 1, 2 or 3.
Phenol	Tenax (SSV 240L) or combination tube 1.

APPENDIX 2.

LINEARITY TESTING OF ONE SORBENT TUBE/FOCUSING TUBE COMBINATION

Introduction

Automated gas chromatographs such as those used at network monitoring stations for hourly updates of volatile organic compounds (VOCs) have a solid adsorbent concentrator for the VOCs. This unit is comparable to the sorbent tubes being discussed in this document. The table below shows the results of sampling a synthetic mixture of the Compendium Method TO-14 target list in humidified zero air (approximately 70% RH at 25°C). Sampling occurred for 6, 12, and 24 min at a rate of 80 mL/min giving a total sampling volume of 480, 960, and 1920 mL. These results are similar to the determination of safe sampling volume and the amount of material collected should be related linearly to the sample period. The results indicate that breakthrough has not occurred to any appreciable extent at a sampling volume of approximately 2 L for the stated experimental conditions. The response measured is the response of chlorine from an atomic emission detector after chromatographic separation. The sorbent tube mix was Carbotrap™ C/Carbotrap™ B/Carboxen™ 1000 and the focusing tube mix was Tenax-TA/Silica Gel/Ambersorb XE-340/Charcoal. The primary tube was 6 mm O.D. with 4 mm I.D., 110 mm in length. The focusing tube was 6 mm O.D., 0.9 mm I.D., 185 mm in length. The packing lengths for the sorbent tube per sorbent type were: 1.27 cm, 2.86 cm, and 3.18 cm, respectively. The packing lengths for the focusing tube per sorbent type were: 5.08 cm, 2.54 cm, and 1.27 cm.

Linearity test

[Note: Actual sampling volumes were 490, 980, and 1960 instead of 1/2,1, and 2L as listed for convenience in the table below. The response is obtained as chlorine response on an atomic emission detector. Compounds corresponding to the numbered compounds in the table are identified on the following page.]

Cpd.	1/2 L	1 L	2 L	2L/1L	2L/(1/2L)	1L/(1/2L)	% Diff (2L/0.5L) vs. 4
1	1255.4	2402.9	5337.2	2.22	4.25	1.91	-6.28
2	711.82	1802.2	3087	1.71	4.34	2.53	-8.42
3	2079.4	4853	9386	1.93	4.51	2.33	-12.85
4	978.14	2381.3	4680.1	1.97	4.78	2.43	-19.62
6	1155.7	2357.1	4725.2	2.00	4.09	2.04	-2.22
7	3072.8	6764.4	13662	2.02	4.45	2.20	-11.15
8	2337.3	4356.1	8697.2	2.00	3.72	1.86	6.97
9	3041.7	5986.6	11525	1.93	3.79	1.97	5.28
10	1061.7	2183.6	4296.5	1.97	4.05	2.06	-1.17
11	3800.5	7726.7	15182	1.96	3.99	2.03	0.13
12	2386.9	4877.5	9669	1.98	4.05	2.04	-1.27
13	2455.4	5063.5	9986.6	1.97	4.07	2.06	-1.68
14	3972.6	8118.4	15985	1.97	4.02	2.04	-0.60
15	2430.9	4947.9	9756.1	1.97	4.01	2.04	-0.33
16	6155.4	9247.4	16942	1.83	2.75	1.50	31.19

Cpd.	1/2 L	1 L	2 L	2L/1L	2L/(1/2L)	1L/(1/2L)	% Diff (2L/0.5L) vs. 4
18	4270.4	9233.8	18721	2.03	4.38	2.16	-9.60
19	2494.8	5115.2	10087	1.97	4.04	2.05	-1.08
20	4023.9	8379.4	16672	1.99	4.14	2.08	-3.58
21	1086.8	2295.4	4611.7	2.01	4.24	2.11	-6.08
22	793.33	1670.1	3375.2	2.02	4.25	2.11	-6.36
23	3708.2	7679	15165	1.97	4.09	2.07	-2.24
26	5094	10582	21139	2.00	4.15	2.08	-3.74
27	1265.1	2615.1	5136.9	1.96	4.06	2.07	-1.51
31	4434.9	9176.4	17975	1.96	4.05	2.07	-1.33
36	2320.7	5015.7	9827.3	1.96	4.23	2.16	-5.87
37	441.17	953.09	1894	1.99	4.29	2.16	-7.33
38	1410.7	3015	5895.2	1.96	4.18	2.14	-4.47
39	2338.7	4974.8	9858.8	1.98	4.22	2.13	-5.39
40	2640.9	6269.4	12495	1.99	4.73	2.37	-18.28
41	6796.5	14938	29274	1.96	4.31	2.20	-7.68

There are no values presented in the above table for hydrocarbons and brominated hydrocarbons (compounds numbered 5, 17, 24, 25, 28, 29, 30, 32, 33, 34, and 35) which do not respond to the chlorine detector used to collect this data.

Compendium Method TO-14
Target Compound List (TCL)

1. Dichlorodifluoromethane
2. Methyl Chloride
3. 1,2-dichloro-1,1,2,2-tetrafluoroethane
4. Vinyl Chloride
5. Methyl Bromide
6. Ethyl Chloride
7. Trichlorofluoromethane
8. 1,1-dichloroethene
9. Dichloromethane
10. 3-chloropropene
11. 1,1,2-trichloro-1,2,2-trifluoroethane
12. 1,1-dichloroethane
13. Cis-1,2-dichloroethene
14. Trichloromethane
15. 1,2-dichloroethane
16. 1,1,1-trichloroethane
17. Benzene
18. Carbon Tetrachloride
19. 1,2-dichloropropane
20. Trichloroethene
21. Cis-1,3-dichloropropene
22. Trans-1,3-dichloropropene
23. 1,1,2-trichloroethane
24. Toluene
25. 1,2-dibromoethane
26. Tetrachloroethene
27. Chlorobenzene
28. Ethylbenzene
29. m,p-xylene
30. Styrene
31. 1,1,2,2-tetrachloroethane
32. o-xylene
33. 4-ethyltoluene
34. 1,3,5-trimethylbenzene
35. 1,2,4-trimethylbenzene
36. m-dichlorobenzene
37. Benzyl Chloride
38. p-dichlorobenzene
39. o-dichlorobenzene
40. 1,2,4-trichlorobenzene
41. Hexachlorobutadiene