Waste Isolation Pilot Plant

Compliance Certification Application

Reference 234e

EPA (U.S. Environmental Protection Agency). 1986.
Test Methods for Evaluating Solid Waste, Physical/Chemical Methods, SW-846, 3rd ed., Office of Solid Waste and Emergency Response, Washington, D.C. Volume II.

Submitted in accordance with 40 CFR §194.13, Submission of Reference Materials.

United States
Environmental Protection
Agency

Office of Solid Waste
and Emergency Response
Washington, DC 20460

November 1986
SW-846
Third Edition

Solid Waste

Test Methods for Evaluating Solid Waste

Volume II: Field Manual Physical / Chemical Methods

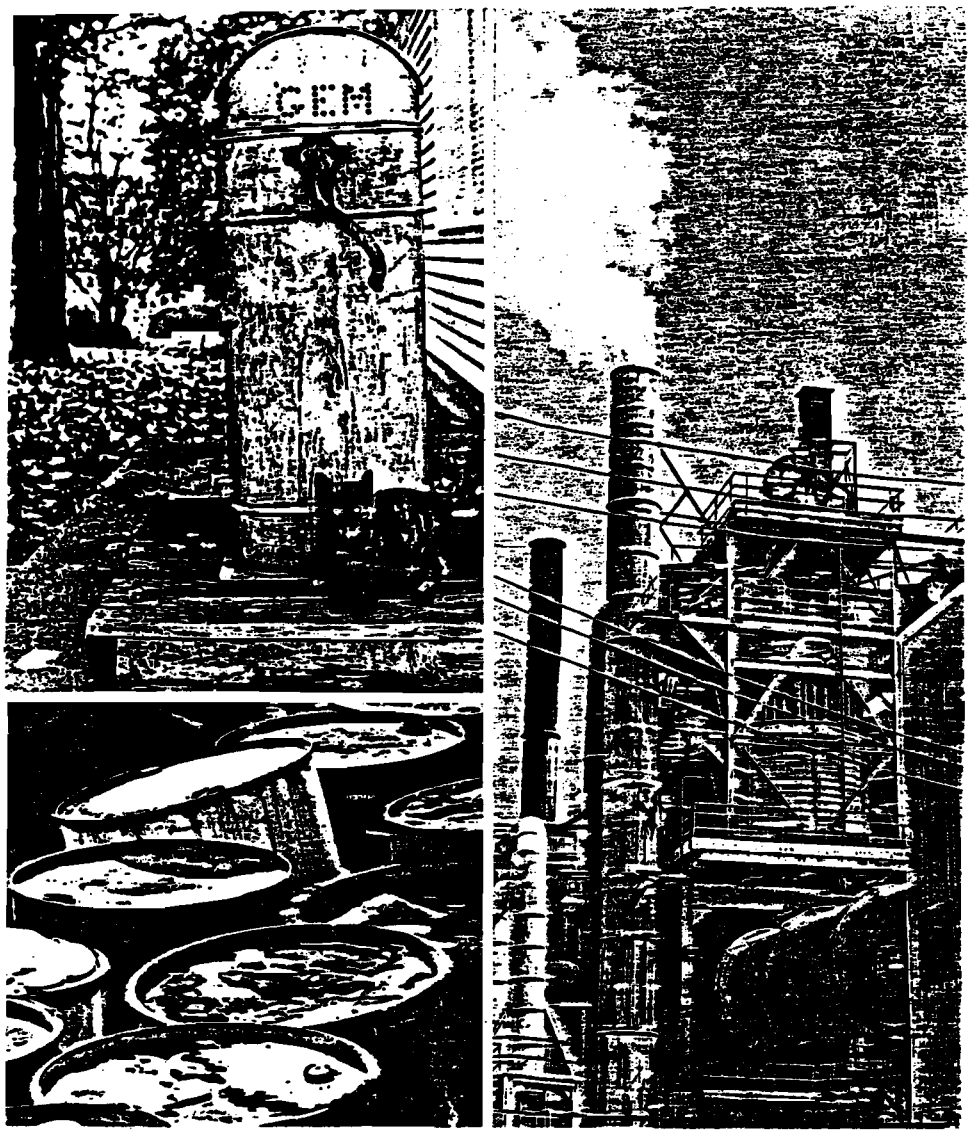

Printed on Recycled Paper

DISCLAIMER

Mention of trade names or commercial products does not constitute endorsement or recommendation for use by the U.S. Environmental Protection Agency.

SW-846 methods are designed to be used with equipment from any manufacturer that results in suitable method performance (as assessed by accuracy, precision, detection limits and matrix compatibility). In several SW-846 methods, equipment specifications and settings are given for the specific instrument used during method development, or subsequently approved for use in the method. These references are made to provide the best possible guidance to laboratories using this manual. Equipment not specified in the method may be used as long as the laboratory achieves equivalent or superior method performance. If alternate equipment is used, the laboratory must follow the manufacturer's instructions for their particular instrument.

Since many types and sizes of glassware and supplies are commercially available, and since it is possible to prepare reagents and standards in many different ways, those specified in these methods may be replaced by any similar types as long as this substitution does not affect the overall quality of the analyses.

PART III SAMPLING

ACKNOWLEDGEMENTS

The Office of Solid Waste thanks the following individuals and groups for their efforts, assistance and advice in the preparation of this manual:

Dr. William Loy, Chemist, Analytical Support Branch, EPA Region IV;

Mr. Theodore Martin, Research Chemist, EMSL-CI;

Dr. Nancy Rothman, Assistant Director, ERCO/A Division of ENSECO;

Ms. Ann Soule, Technical Editor, ERCO/A Division of ENSECO;

Ms. Dorothy Bell, Technical Editor, ERCO/A Division of ENSECO;

Ms. Margaret Layne, Technical Program Manager, Research Triangle Institute;

Mr. Alvia Gaskill, Senior Environmental Scientist, Research Triangle Institute;

Mr. Ronald Ramsey, Technical Program Manager, Dynamac Corp.;

Mr. Gene E. Fax, Managing Director, The Cadmus Group, Inc.;

Mr. Robert Hirsch, New Jersey Department of Environmental Protection;

Mr. Henry Hoffman, New Jersey Department of Environmental Protection;

Mr. David Bennett, Hazardous Substance Branch, EPA;

The EPA SW-846 Work Group.

ABSTRACT

Test Methods for Evaluating Solid Waste, Physical/Chemical Methods (SW-846) provides test procedures and guidance which are recommended for use in conducting the evaluations and measurements needed to comply with the Resource Conservation and Recovery Act (RCRA), Public Law 94-580. These methods are approved by the U.S. Environmental Protection Agency for obtaining data to satisfy the requirements of 40 **CFR** Parts 122 through 270. This manual presents the state-of-the-art in routine analytical testing adapted for the RCRA program. It contains procedures for field and laboratory quality control, sampling, determining hazardous constituents in wastes, determining the hazardous characteristics of wastes (toxicity, ignitability, reactivity, and corrosivity), and for determining physical properties of wastes. It also contains guidance on how to select appropriate methods.

Several of the hazardous waste regulations under Subtitle C of RCRA require that specific testing methods described in SW-846 be employed for certain applications. Refer to 40 *Code of Federal Regulations* (CFR), Parts 260 through 270, for those specific requirements. Any reliable analytical method may be used to meet other requirements under Subtitle C of RCRA.

TABLE OF CONTENTS

VOLUME ONE

SECTION A

DISCLAIMER
ABSTRACT
TABLE OF CONTENTS
METHOD INDEX AND CONVERSION TABLE
PREFACE
ACKNOWLEDGEMENTS

PART I METHODS FOR ANALYTES AND PROPERTIES

CHAPTER ONE -- QUALITY CONTROL

1.0 Introduction
2.0 QA Project Plan
3.0 Field Operations
4.0 Laboratory Operations
5.0 Definitions
6.0 References

CHAPTER TWO -- CHOOSING THE CORRECT PROCEDURE

2.1 Purpose
2.2 Required Information
2.3 Implementing the Guidance
2.4 Characteristics
2.5 Ground Water
2.6 References

CHAPTER THREE -- METALLIC ANALYTES

3.1 Sampling Considerations
3.2 Sample Preparation Methods

Method 3005A: Acid Digestion of Waters for Total Recoverable or Dissolved Metals for Analysis by Flame Atomic Absorption (FLAA) or Inductively Coupled Plasma (ICP) Spectroscopy

Method 3010A: Acid Digestion of Aqueous Samples and Extracts for Total Metals for Analysis by Flame Atomic Absorption (FLAA) or Inductively Coupled Plasma (ICP) Spectroscopy

Method 3015: Microwave Assisted Acid Digestion of Aqueous Samples and Extracts

Method 3020A: Acid Digestion of Aqueous Samples and Extracts for Total Metals for Analysis by Graphite Furnace Atomic Absorption (GFAA) Spectroscopy
Method 3040: Dissolution Procedure for Oils, Greases, or Waxes
Method 3050A: Acid Digestion of Sediments, Sludges, and Soils
Method 3051: Microwave Assisted Acid Digestion of Sediments, Sludges, Soils, and Oils

3.3 Methods for Determination of Metals

Method 6010A: Inductively Coupled Plasma-Atomic Emission Spectroscopy
Method 6020: Inductively Coupled Plasma - Mass Spectrometry
Method 7000A: Atomic Absorption Methods
Method 7020: Aluminum (AA, Direct Aspiration)
Method 7040: Antimony (AA, Direct Aspiration)
Method 7041: Antimony (AA, Furnace Technique)
Method 7060A: Arsenic (AA, Furnace Technique)
Method 7061A: Arsenic (AA, Gaseous Hydride)
Method 7062: Antimony and Arsenic (AA, Borohydride Reduction)
Method 7080A: Barium (AA, Direct Aspiration)
Method 7081: Barium (AA, Furnace Technique)
Method 7090: Beryllium (AA, Direct Aspiration)
Method 7091: Beryllium (AA, Furnace Technique)
Method 7130: Cadmium (AA, Direct Aspiration)
Method 7131A: Cadmium (AA, Furnace Technique)
Method 7140: Calcium (AA, Direct Aspiration)
Method 7190: Chromium (AA, Direct Aspiration)
Method 7191: Chromium (AA, Furnace Technique)
Method 7195: Chromium, Hexavalent (Coprecipitation)
Method 7196A: Chromium, Hexavalent (Colorimetric)
Method 7197: Chromium, Hexavalent (Chelation/Extraction)
Method 7198: Chromium, Hexavalent (Differential Pulse Polarography)
Method 7200: Cobalt (AA, Direct Aspiration)
Method 7201: Cobalt (AA, Furnace Technique)
Method 7210: Copper (AA, Direct Aspiration)
Method 7211: Copper (AA, Furnace Technique)
Method 7380: Iron (AA, Direct Aspiration)
Method 7381: Iron (AA, Furnace Technique)
Method 7420: Lead (AA, Direct Aspiration)
Method 7421: Lead (AA, Furnace Technique)
Method 7430: Lithium (AA, Direct Aspiration)
Method 7450: Magnesium (AA, Direct Aspiration)
Method 7460: Manganese (AA, Direct Aspiration)
Method 7461: Manganese (AA, Furnace Technique)
Method 7470A: Mercury in Liquid Waste (Manual Cold-Vapor Technique)
Method 7471A: Mercury in Solid or Semisolid Waste (Manual Cold-Vapor Technique)
Method 7480: Molybdenum (AA, Direct Aspiration)
Method 7481: Molybdenum (AA, Furnace Technique)
Method 7520: Nickel (AA, Direct Aspiration)
Method 7550: Osmium (AA, Direct Aspiration)
Method 7610: Potassium (AA, Direct Aspiration)
Method 7740: Selenium (AA, Furnace Technique)

Method 7741A: Selenium (AA, Gaseous Hydride)
Method 7742: Selenium (AA, Borohydride Reduction)
Method 7760A: Silver (AA, Direct Aspiration)
Method 7761: Silver (AA, Furnace Technique)
Method 7770: Sodium (AA, Direct Aspiration)
Method 7780: Strontium (AA, Direct Aspiration)
Method 7840: Thallium (AA, Direct Aspiration)
Method 7841: Thallium (AA, Furnace Technique)
Method 7870: Tin (AA, Direct Aspiration)
Method 7910: Vanadium (AA, Direct Aspiration)
Method 7911: Vanadium (AA, Furnace Technique)
Method 7950: Zinc (AA, Direct Aspiration)
Method 7951: Zinc (AA, Furnace Technique)

APPENDIX -- COMPANY REFERENCES

NOTE: A suffix of "A" in the method number indicates revision one (the method has been revised once). A suffix of "B" in the method number indicates revision two (the method has been revised twice). A suffix of "C" in the method number indicates revision three (the method has been revised three times). **In order to properly document the method used for analysis, the entire method number including the suffix letter designation (e.g., A, B, or C) must be identified by the analyst.** A method reference found within the RCRA regulations and the text of SW-846 methods and chapters refers to the latest promulgated revision of the method, even though the method number does not include the appropriate letter suffix.

VOLUME ONE

SECTION B

DISCLAIMER
ABSTRACT
TABLE OF CONTENTS
METHOD INDEX AND CONVERSION TABLE
PREFACE
ACKNOWLEDGEMENTS

CHAPTER ONE, REPRINTED -- QUALITY CONTROL

1.0 Introduction
2.0 QA Project Plan
3.0 Field Operations
4.0 Laboratory Operations
5.0 Definitions
6.0 References

CHAPTER FOUR -- ORGANIC ANALYTES

4.1 Sampling Considerations
4.2 Sample Preparation Methods

4.2.1 Extractions and Preparations

Method 3500A: Organic Extraction and Sample Preparation
Method 3510B: Separatory Funnel Liquid-Liquid Extraction
Method 3520B: Continuous Liquid-Liquid Extraction
Method 3540B: Soxhlet Extraction
Method 3541: Automated Soxhlet Extraction
Method 3550A: Ultrasonic Extraction
Method 3580A: Waste Dilution
Method 5030A: Purge-and-Trap
Method 5040A: Analysis of Sorbent Cartridges from Volatile Organic Sampling Train (VOST): Gas Chromatography/Mass Spectrometry Technique
Method 5041: Protocol for Analysis of Sorbent Cartridges from Volatile Organic Sampling Train (VOST): Wide-bore Capillary Column Technique

4.2.2 Cleanup

Method 3600B: Cleanup
Method 3610A: Alumina Column Cleanup

Method 3611A: Alumina Column Cleanup and Separation of Petroleum Wastes
Method 3620A: Florisil Column Cleanup
Method 3630B: Silica Gel Cleanup
Method 3640A: Gel-Permeation Cleanup
Method 3650A: Acid-Base Partition Cleanup
Method 3660A: Sulfur Cleanup
Method 3665: Sulfuric Acid/Permanganate Cleanup

4.3 Determination of Organic Analytes

4.3.1 Gas Chromatographic Methods

Method 8000A: Gas Chromatography
Method 8010B: Halogenated Volatile Organics by Gas Chromatography
Method 8011: 1,2-Dibromoethane and 1,2-Dibromo-3-chloropropane by Microextraction and Gas Chromatography
Method 8015A: Nonhalogenated Volatile Organics by Gas Chromatography
Method 8020A: Aromatic Volatile Organics by Gas Chromatography
Method 8021A: Halogenated Volatiles by Gas Chromatography Using Photoionization and Electrolytic Conductivity Detectors in Series: Capillary Column Technique
Method 8030A: Acrolein and Acrylonitrile by Gas Chromatography
Method 8031: Acrylonitrile by Gas Chromatography
Method 8032: Acrylamide by Gas Chromatography
Method 8040A: Phenols by Gas Chromatography
Method 8060: Phthalate Esters
Method 8061: Phthalate Esters by Capillary Gas Chromatography with Electron Capture Detection (GC/ECD)
Method 8070: Nitrosamines by Gas Chromatography
Method 8080A: Organochlorine Pesticides and Polychlorinated Biphenyls by Gas Chromatography
Method 8081: Organochlorine Pesticides and PCBs as Aroclors by Gas Chromatography: Capillary Column Technique
Method 8090: Nitroaromatics and Cyclic Ketones
Method 8100: Polynuclear Aromatic Hydrocarbons
Method 8110: Haloethers by Gas Chromatography
Method 8120A: Chlorinated Hydrocarbons by Gas Chromatography
Method 8121: Chlorinated Hydrocarbons by Gas Chromatography: Capillary Column Technique
Method 8140: Organophosphorus Pesticides
Method 8141A: Organophosphorus Compounds by Gas Chromatography: Capillary Column Technique
Method 8150B: Chlorinated Herbicides by Gas Chromatography
Method 8151: Chlorinated Herbicides by GC Using Methylation or Pentafluorobenzylation Derivatization: Capillary Column Technique

4.3.2 Gas Chromatographic/Mass Spectroscopic Methods

Method 8240B: Volatile Organic Compounds by Gas Chromatography/Mass Spectrometry (GC/MS)
Method 8250A: Semivolatile Organic Compounds by Gas Chromatography/Mass Spectrometry (GC/MS)
Method 8260A: Volatile Organic Compounds by Gas Chromatography/Mass Spectrometry (GC/MS): Capillary Column Technique
Method 8270B: Semivolatile Organic Compounds by Gas Chromatography/Mass Spectrometry (GC/MS): Capillary Column Technique
Method 8280: The Analysis of Polychlorinated Dibenzo-p-Dioxins and Polychlorinated Dibenzofurans
Appendix A: Signal-to-Noise Determination Methods
Appendix B: Recommended Safety and Handling Procedures for PCDDs/PCDFs
Method 8290: Polychlorinated Dibenzodioxins (PCDDs) and Polychlorinated Dibenzofurans (PCDFs) by High-Resolution Gas Chromatography/High-Resolution Mass Spectrometry (HRGC/HRMS)
Attachment A: Procedures for the Collection, Handling, Analysis, and Reporting of Wipe Tests Performed within the Laboratory

4.3.3 High Performance Liquid Chromatographic Methods

Method 8310: Polynuclear Aromatic Hydrocarbons
Method 8315: Determination of Carbonyl Compounds by High Performance Liquid Chromatography (HPLC)
Appendix A: Recrystallization of 2,4-Dinitrophenylhydrazine (DNPH)
Method 8316: Acrylamide, Acrylonitrile and Acrolein by High Performance Liquid Chromatography (HPLC)
Method 8318: N-Methylcarbamates by High Performance Liquid Chromatography (HPLC)
Method 8321: Solvent Extractable Non-Volatile Compounds by High Performance Liquid Chromatography/Thermospray/Mass Spectrometry (HPLC/TSP/MS) or Ultraviolet (UV) Detection
Method 8330: Nitroaromatics and Nitramines by High Performance Liquid Chromatography (HPLC)
Method 8331: Tetrazene by Reverse Phase High Performance Liquid Chromatography (HPLC)

4.3.4 Fourier Transform Infrared Methods

Method 8410: Gas Chromatography/Fourier Transform Infrared (GC/FT-IR) Spectrometry for Semivolatile Organics: Capillary Column

4.4 Miscellaneous Screening Methods

Method 3810: Headspace
Method 3820: Hexadecane Extraction and Screening of Purgeable Organics
Method 4010: Screening for Pentachlorophenol by Immunoassay
Method 8275: Thermal Chromatography/Mass Spectrometry (TC/MS) for Screening Semivolatile Organic Compounds

APPENDIX -- COMPANY REFERENCES

NOTE: A suffix of "A" in the method number indicates revision one (the method has been revised once). A suffix of "B" in the method number indicates revision two (the method has been revised twice). A suffix of "C" in the method number indicates revision three (the method has been revised three times). **In order to properly document the method used for analysis, the entire method number including the suffix letter designation (e.g., A, B, or C) must be identified by the analyst.** A method reference found within the RCRA regulations and the text of SW-846 methods and chapters refers to the latest promulgated revision of the method, even though the method number does not include the appropriate letter suffix.

VOLUME ONE

SECTION C

DISCLAIMER
ABSTRACT
TABLE OF CONTENTS
METHOD INDEX AND CONVERSION TABLE
PREFACE

CHAPTER ONE, REPRINTED -- QUALITY CONTROL

1.0 Introduction
2.0 QA Project Plan
3.0 Field Operations
4.0 Laboratory Operations
5.0 Definitions
6.0 References

CHAPTER FIVE -- MISCELLANEOUS TEST METHODS

Method 5050:	Bomb Preparation Method for Solid Waste
Method 9010A:	Total and Amenable Cyanide (Colorimetric, Manual)
Method 9012:	Total and Amenable Cyanide (Colorimetric, Automated UV)
Method 9013:	Cyanide Extraction Procedure for Solids and Oils
Method 9020B:	Total Organic Halides (TOX)
Method 9021:	Purgeable Organic Halides (POX)
Method 9022:	Total Organic Halides (TOX) by Neutron Activation Analysis
Method 9030A:	Acid-Soluble and Acid-Insoluble Sulfides
Method 9031:	Extractable Sulfides
Method 9035:	Sulfate (Colorimetric, Automated, Chloranilate)
Method 9036:	Sulfate (Colorimetric, Automated, Methylthymol Blue, AA II)
Method 9038:	Sulfate (Turbidimetric)
Method 9056:	Determination of Inorganic Anions by Ion Chromatography
Method 9060:	Total Organic Carbon
Method 9065:	Phenolics (Spectrophotometric, Manual 4-AAP with Distillation)
Method 9066:	Phenolics (Colorimetric, Automated 4-AAP with Distillation)
Method 9067:	Phenolics (Spectrophotometric, MBTH with Distillation)
Method 9070:	Total Recoverable Oil & Grease (Gravimetric, Separatory Funnel Extraction)
Method 9071A:	Oil and Grease Extraction Method for Sludge and Sediment Samples
Method 9075:	Test Method for Total Chlorine in New and Used Petroleum Products by X-Ray Fluorescence Spectrometry (XRF)
Method 9076:	Test Method for Total Chlorine in New and Used Petroleum Products by Oxidative Combustion and Microcoulometry

Method 9077: Test Methods for Total Chlorine in New and Used Petroleum Products (Field Test Kit Methods)
Method A: Fixed End Point Test Kit Method
Method B: Reverse Titration Quantitative End Point Test Kit Method
Method C: Direct Titration Quantitative End Point Test Kit Method
Method 9131: Total Coliform: Multiple Tube Fermentation Technique
Method 9132: Total Coliform: Membrane Filter Technique
Method 9200: Nitrate
Method 9250: Chloride (Colorimetric, Automated Ferricyanide AAI)
Method 9251: Chloride (Colorimetric, Automated Ferricyanide AAII)
Method 9252A: Chloride (Titrimetric, Mercuric Nitrate)
Method 9253: Chloride (Titrimetric, Silver Nitrate)
Method 9320: Radium-228

CHAPTER SIX -- PROPERTIES

Method 1312: Synthetic Precipitation Leaching Procedure
Method 1320: Multiple Extraction Procedure
Method 1330A: Extraction Procedure for Oily Wastes
Method 9040B: pH Electrometric Measurement
Method 9041A: pH Paper Method
Method 9045C: Soil and Waste pH
Method 9050: Specific Conductance
Method 9080: Cation-Exchange Capacity of Soils (Ammonium Acetate)
Method 9081: Cation-Exchange Capacity of Soils (Sodium Acetate)
Method 9090A: Compatibility Test for Wastes and Membrane Liners
Method 9095: Paint Filter Liquids Test
Method 9096: Liquid Release Test (LRT) Procedure
Appendix A: Liquid Release Test Pre-Test
Method 9100: Saturated Hydraulic Conductivity, Saturated Leachate Conductivity, and Intrinsic Permeability
Method 9310: Gross Alpha and Gross Beta
Method 9315: Alpha-Emitting Radium Isotopes

PART II CHARACTERISTICS

CHAPTER SEVEN -- INTRODUCTION AND REGULATORY DEFINITIONS

7.1 Ignitability
7.2 Corrosivity
7.3 Reactivity

Test Method to Determine Hydrogen Cyanide Released from Wastes
Test Method to Determine Hydrogen Sulfide Released from Wastes

7.4 Toxicity Characteristic Leaching Procedure

CHAPTER EIGHT -- METHODS FOR DETERMINING CHARACTERISTICS

8.1 Ignitability

Method 1010: Pensky-Martens Closed-Cup Method for Determining Ignitability

Method 1020A: Setaflash Closed-Cup Method for Determining Ignitability

8.2 Corrosivity

Method 1110: Corrosivity Toward Steel

8.3 Reactivity

8.4 Toxicity

Method 1310A: Extraction Procedure (EP) Toxicity Test Method and Structural Integrity Test

Method 1311: Toxicity Characteristic Leaching Procedure

APPENDIX -- COMPANY REFERENCES

NOTE: A suffix of "A" in the method number indicates revision one (the method has been revised once). A suffix of "B" in the method number indicates revision two (the method has been revised twice). A suffix of "C" in the method number indicates revision three (the method has been revised three times). **In order to properly document the method used for analysis, the entire method number including the suffix letter designation (e.g., A, B, or C) must be identified by the analyst.** A method reference found within the RCRA regulations and the text of SW-846 methods and chapters refers to the latest promulgated revision of the method, even though the method number does not include the appropriate letter suffix.

VOLUME TWO

DISCLAIMER
ABSTRACT
TABLE OF CONTENTS
METHOD INDEX AND CONVERSION TABLE
PREFACE

CHAPTER ONE, REPRINTED -- QUALITY CONTROL

1.0 Introduction
2.0 QA Project Plan
3.0 Field Operations
4.0 Laboratory Operations
5.0 Definitions
6.0 References

PART III SAMPLING

CHAPTER NINE -- SAMPLING PLAN

9.1 Design and Development
9.2 Implementation

CHAPTER TEN -- SAMPLING METHODS

Method 0010: Modified Method 5 Sampling Train
Appendix A: Preparation of XAD-2 Sorbent Resin
Appendix B: Total Chromatographable Organic Material Analysis
Method 0020: Source Assessment Sampling System (SASS)
Method 0030: Volatile Organic Sampling Train

PART IV MONITORING

CHAPTER ELEVEN -- GROUND WATER MONITORING

11.1 Background and Objectives
11.2 Relationship to the Regulations and to Other Documents
11.3 Revisions and Additions
11.4 Acceptable Designs and Practices
11.5 Unacceptable Designs and Practices

CHAPTER TWELVE -- LAND TREATMENT MONITORING

12.1 Background
12.2 Treatment Zone
12.3 Regulatory Definition

12.4 Monitoring and Sampling Strategy
12.5 Analysis
12.6 References and Bibliography

CHAPTER THIRTEEN - INCINERATION

13.1 Introduction
13.2 Regulatory Definition
13.3 Waste Characterization Strategy
13.4 Stack-Gas Effluent Characterization Strategy
13.5 Additional Effluent Characterization Strategy
13.6 Selection of Specific Sampling and Analysis Methods
13.7 References

APPENDIX -- COMPANY REFERENCES

NOTE: A suffix of "A" in the method number indicates revision one (the method has been revised once). A suffix of "B" in the method number indicates revision two (the method has been revised twice). A suffix of "C" in the method number indicates revision three (the method has been revised three times). **In order to properly document the method used for analysis, the entire method number including the suffix letter designation (e.g., A, B, or C) must be identified by the analyst.** A method reference found within the RCRA regulations and the text of SW-846 methods and chapters refers to the latest promulgated revision of the method, even though the method number does not include the appropriate letter suffix.

METHOD INDEX AND CONVERSION TABLE

Method Number, Third Edition	Chapter Number, Third Edition	Method Number, Second Edition	Current Revision Number
0010	Ten	0010	0
0020	Ten	0020	0
0030	Ten	0030	0
1010	Eight (8.1)	1010	0
1020	Eight (8.1)	1020	0
1110	Eight (8.2)	1110	0
1310	Eight (8.4)	1310	0
1320	Six	1320	0
1330	Six	1330	0
3005	Three	3005	0
3010	Three	3010	0
3020	Three	3020	0
3040	Three	3040	0
3050	Three	3050	0
3500	Four (4.2.1)	None (new method)	0
3510	Four (4.2.1)	3510	0
3520	Four (4.2.1)	3520	0
3540	Four (4.2.1)	3540	0
3550	Four (4.2.1)	3550	0
3580	Four (4.2.1)	None (new method)	0
3600	Four (4.2.2)	None (new method)	0
3610	Four (4.2.2)	None (new method)	0
3611	Four (4.2.2)	3570	0
3620	Four (4.2.2)	None (new method)	0
3630	Four (4.2.2)	None (new method)	0
3640	Four (4.2.2)	None (new method)	0
3650	Four (4.2.2)	None (new method)	0
3660	Four (4.2.2)	None (new method)	0
3810	Four (4.4)	5020	0
3820	Four (4.4)	None (new method)	0
5030	Four (4.2.1)	5030	0
5040	Four (4.2.1)	3720	0
6010	Three	6010	0
7000	Three	7000	0
7020	Three	7020	0

METHOD INDEX AND CONVERSION TABLE
(Continued)

Method Number, Third Edition	Chapter Number, Third Edition	Method Number, Second Edition	Current Revision Number
7040	Three	7040	0
7041	Three	7041	0
7060	Three	7060	0
7061	Three	7061	0
7080	Three	7080	0
7090	Three	7090	0
7091	Three	7091	0
7130	Three	7130	0
7131	Three	7131	0
7140	Three	7140	0
7190	Three	7190	0
7191	Three	7191	0
7195	Three	7195	0
7196	Three	7196	0
7197	Three	7197	0
7198	Three	7198	0
7200	Three	7200	0
7201	Three	7201	0
7210	Three	7210	0
7380	Three	7380	0
7420	Three	7420	0
7421	Three	7421	0
7450	Three	7450	0
7460	Three	7460	0
7470	Three	7470	0
7471	Three	7471	0
7480	Three	7480	0
7481	Three	7481	0
7520	Three	7520	0
7550	Three	7550	0
7610	Three	7610	0
7740	Three	7740	0
7741	Three	7741	0
7760	Three	7760	0
7770	Three	7770	0

METHOD INDEX AND CONVERSION TABLE
(Continued)

Method Number, Third Edition	Chapter Number, Third Edition	Method Number, Second Edition	Current Revision Number
7840	Three	7840	0
7841	Three	7841	0
7870	Three	7870	0
7910	Three	7910	0
7911	Three	7911	0
7950	Three	7950	0
8000	Four (4.3.1)	None (new method)	0
8010	Four (4.3.1)	8010	0
8015	Four (4.3.1)	8015	0
8020	Four (4.3.1)	8020	0
8030	Four (4.3.1)	8030	0
8040	Four (4.3.1)	8040	0
8060	Four (4.3.1)	8060	0
8080	Four (4.3.1)	8080	0
8090	Four (4.3.1)	8090	0
8100	Four (4.3.1)	8100	0
8120	Four (4.3.1)	8120	0
8140	Four (4.3.1)	8140	0
8150	Four (4.3.1)	8150	0
8240	Four (4.3.2)	8240	0
8250	Four (4.3.2)	8250	0
8270	Four (4.3.2)	8270	0
8280	Four (4.3.2)	None (new method)	0
8310	Four (4.3.3)	8310	0
9010	Five	9010	0
9020	Five	9020	0
9022	Five	9022	0
9030	Five	9030	0
9035	Five	9035	0
9036	Five	9036	0
9038	Five	9038	0
9040	Six	9040	0
9041	Six	9041	0
9045	Six	9045	0
9050	Six	9050	0

METHOD INDEX AND CONVERSION TABLE
(Continued)

Method Number, Third Edition	Chapter Number, Third Edition	Method Number, Second Edition	Current Revision Number
9060	Five	9060	0
9065	Five	9065	0
9066	Five	9066	0
9067	Five	9067	0
9070	Five	9070	0
9071	Five	9071	0
9080	Six	9080	0
9081	Six	9081	0
9090	Six	9090	0
9095	Six	9095	0
9100	Six	9100	0
9131	Five	9131	0
9132	Five	9132	0
9200	Five	9200	0
9250	Five	9250	0
9251	Five	9251	0
9252	Five	9252	0
9310	Six	9310	0
9315	Six	9315	0
9320	Five	9320	0
HCN Test Method	Seven	HCN Test Method	0
H_2S Test Method	Seven	H_2S Test Method	0

PREFACE AND OVERVIEW

PURPOSE OF THE MANUAL

Test Methods for Evaluating Solid Waste (SW-846) is intended to provide a unified, up-to-date source of information on sampling and analysis related to compliance with RCRA regulations. It brings together into one reference all sampling and testing methodology approved by the Office of Solid Waste for use in implementing the RCRA regulatory program. The manual provides methodology for collecting and testing representative samples of waste and other materials to be monitored. Aspects of sampling and testing covered in SW-846 include quality control, sampling plan development and implementation, analysis of inorganic and organic constituents, the estimation of intrinsic physical properties, and the appraisal of waste characteristics.

The procedures described in this manual are meant to be comprehensive and detailed, coupled with the realization that the problems encountered in sampling and analytical situations require a certain amount of flexibility. The solutions to these problems will depend, in part, on the skill, training, and experience of the analyst. For some situations, it is possible to use this manual in rote fashion. In other situations, it will require a combination of technical abilities, using the manual as guidance rather than in a step-by-step, word-by-word fashion. Although this puts an extra burden on the user, it is unavoidable because of the variety of sampling and analytical conditions found with hazardous wastes.

ORGANIZATION AND FORMAT

This manual is divided into two volumes. Volume I focuses on laboratory activities and is divided for convenience into three sections. Volume IA deals with quality control, selection of appropriate test methods, and analytical methods for metallic species. Volume IB consists of methods for organic analytes. Volume IC includes a variety of test methods for miscellaneous analytes and properties for use in evaluating the waste characteristics. Volume II deals with sample acquisition and includes quality control, sampling plan design and implementation, and field sampling methods. Included for the convenience of sampling personnel are discusssions of the ground water, land treatment, and incineration monitoring regulations.

Volume I begins with an overview of the quality control precedures to be imposed upon the sampling and analytical methods. The quality control chapter (Chapter One) and the methods chapters are interdependent. The analytical procedures cannot be used without a thorough understanding of the quality control requirements and the means to implement them. This understanding can be achieved only be reviewing Chapter One and the analytical methods together. It is expected that individual laboratories, using SW-846 as the reference

source, will select appropriate methods and develop a standard operating procedure (SOP) to be followed by the laboratory. The SOP should incorporate the pertinent information from this manual adopted to the specific needs and circumstances of the individual laboratory as well as to the materials to be evaluated.

The method selection chapter (Chapter Two) presents a comprehensive discussion of the application of these methods to various matrices in the determination of groups of analytes or specific analytes. It aids the chemist in constructing the correct analytical method from the array of procedures which may cover the matrix/analyte/concentration combination of interests. The section discusses the objective of the testing program and its relationship to the choice of an analytical method. Flow charts are presented along with tables to guide in the selection of the correct analytical procedures to form the appropriate method.

The analytical methods are separated into distinct procedures describing specific, independent analytical operations. These include extraction, digestion, cleanup, and determination. This format allows linking of the various steps in the analysis according to: the type of sample (e.g., water, soil, sludge, still bottom); analytes(s) of interest; needed sensitivity; and available analytical instrumentation. The chapters describing Miscellaneous Test Methods and Properties, however, give complete methods which are not amenable to such segmentation to form discrete procedures.

The introductory material at the beginning of each section containing analytical procedures presents information on sample handling and preservation, safety, and sample preparation.

Part II of Volume I (Chapters Seven and Eight) describes the characteristics of a waste. Sections following the regulatory descriptions contain the methods used to determine if the waste is hazardous because it exhibits a particular characteristic.

Volume II gives background information on statistical and nonstatistical aspects of sampling. It also presents practical sampling techniques appropriate for situations presenting a variety of physical conditions.

A discussion of the regulatory requirements with respect to several monitoring categories is also given in this volume. These include ground water monitoring, land treatment, and incineration. The purpose of this guidance is to orient the user to the objective of the analysis, and to assist in developing data quality objectives, sampling plans, and laboratory SOP's.

Significant interferences, or other problems, may be encountered with certain samples. In these situations, the analyst is advised to contact the Chief, Methods Section (WH-562B) Technical Assessment Branch, Office of Solid Waste, US EPA, Washington, DC 20460 (202-382-4761) for assistance. The manual is intended to serve all those with a need to evaluate solid waste. Your comments, corrections, suggestions, and questions concerning any material contained in, or omitted from, this manual will be gratefully appreciated. Please direct your comments to the above address.

CHAPTER ONE
TABLE OF CONTENTS

Section		Page
1.0	INTRODUCTION	1
2.0	QA PROJECT PLAN	1
2.1	DATA QUALITY OBJECTIVES	2
2.2	PROJECT OBJECTIVES	2
2.3	SAMPLE COLLECTION	3
2.4	ANALYSIS AND TESTING	3
2.5	QUALITY CONTROL	3
2.6	PROJECT DOCUMENTATION	3
2.7	ORGANIZATION PERFORMING FIELD OR LABORATORY OPERATIONS	4
2.7.1	Performance Evaluation	5
2.7.2	Internal Assessment by QA Function	5
2.7.3	External Assessment	5
2.7.4	On-Site Evaluation	5
2.7.4.1	Field Activities	5
2.7.4.2	Laboratory Activities	6
2.7.5	QA Reports	7
3.0	FIELD OPERATIONS	8
3.1	FIELD LOGISTICS	8
3.2	EQUIPMENT/INSTRUMENTATION	9
3.3	OPERATING PROCEDURES	9
3.3.1	Sample Management	9
3.3.2	Reagent/Standard Preparation	9
3.3.3	Decontamination	9
3.3.4	Sample Collection	10
3.3.5	Field Measurements	10
3.3.6	Equipment Calibration And Maintenance	10
3.3.7	Corrective Action	10
3.3.8	Data Reduction and Validation	11
3.3.9	Reporting	11
3.3.10	Records Management	11
3.3.11	Waste Disposal	11
3.4	FIELD QA AND QC REQUIREMENTS	11
3.4.1	Control Samples	11
3.4.2	Acceptance Criteria	12
3.4.3	Deviations	12
3.4.4	Corrective Action	12
3.4.5	Data Handling	12
3.5	QUALITY ASSURANCE REVIEW	13
3.6	FIELD RECORDS	13

TABLE OF CONTENTS
(continued)

Section		Page
4.0	LABORATORY OPERATIONS	14
4.1	FACILITIES	14
4.2	EQUIPMENT/INSTRUMENTATION	15
4.3	OPERATING PROCEDURES	15
4.3.1	Sample Management	16
4.3.2	Reagent/Standard Preparation	16
4.3.3	General Laboratory Techniques	16
4.3.4	Test Methods	16
4.3.5	Equipment Calibration and Maintenance	17
4.3.6	QC	17
4.3.7	Corrective Action	17
4.3.8	Data Reduction and Validation	18
4.3.9	Reporting	18
4.3.10	Records Management	18
4.3.11	Waste Disposal	18
4.4	LABORATORY QA AND QC PROCEDURES	18
4.4.1	Method Proficiency	18
4.4.2	Control Limits	19
4.4.3	Laboratory Control Procedures	19
4.4.4	Deviations	20
4.4.5	Corrective Action	20
4.4.6	Data Handling	20
4.5	QUALITY ASSURANCE REVIEW	21
4.6	LABORATORY RECORDS	21
5.0	DEFINITIONS	23
6.0	REFERENCES	29
INDEX		30

PART I METHODS FOR ANALYTES AND PROPERTIES

Revision 0
Date September 1986

CHAPTER ONE
QUALITY CONTROL

1.0 INTRODUCTION

It is the goal of the U.S. Environmental Protection Agency's (EPA's) quality assurance (QA) program to ensure that all data be scientifically valid, defensible, and of known precision and accuracy. The data should be of sufficient known quality to withstand scientific and legal challenge relative to the use for which the data are obtained. The QA program is management's tool for achieving this goal.

For RCRA analyses, the recommended minimum requirements for a QA program and the associated quality control (QC) procedures are provided in this chapter.

The data acquired from QC procedures are used to estimate the quality of analytical data, to determine the need for corrective action in response to identified deficiencies, and to interpret results after corrective action procedures are implemented. Method-specific QC procedures are incorporated in the individual methods since they are not applied universally.

A total program to generate data of acceptable quality should include both a QA component, which encompasses the management procedures and controls, as well as an operational day-to-day QC component. This chapter defines fundamental elements of such a data collection program. Data collection efforts involve:

1. design of a project plan to achieve the data quality objectives (DQOs);

2. implementation of the project plan; and

3. assessment of the data to determine if the DQOs are met.

The project plan may be a sampling and analysis plan or a waste analysis plan if it covers the QA/QC goals of the Chapter, or it may be a Quality Assurance Project Plan as described later in this chapter.

This chapter identifies the minimal QC components that should be used in the performance of sampling and analyses, including the QC information which should be documented. Guidance is provided to construct QA programs for field and laboratory work conducted in support of the RCRA program.

2.0 QA PROJECT PLAN

It is recommended that all projects which generate environment-related data in support of RCRA have a QA Project Plan (QAPjP) or equivalent. In some instances, a sampling and analysis plan or a waste analysis plan may be equivalent if it covers all of the QA/QC goals outlined in this chapter. In addition, a separate QAPjP need not be prepared for routine analyses or activities where the procedures to be followed are described in a Standard

Operating Procedures manual or similar document and include the elements of a QAPjP. These documents should be available and referenced in the documentation and/or records for the analysis activities. The term "QAPjP" in this chapter refers to any of these QA/QC documents.

The QAPjP should detail the QA/QC goals and protocols for a specific data collection activity. The QAPjP sets forth a plan for sampling and analysis activities that will generate data of a quality commensurate with their intended use. QAPjP elements should include a description of the project and its objectives; a statement of the DQOs of the project; identification of those involved in the data collection and their responsibilities and authorities; reference to (or inclusion of) the specific sample collection and analysis procedures that will be followed for all aspects of the project; enumeration of QC procedures to be followed; and descriptions of all project documentation. Additional elements should be included in the QAPjP if needed to address all quality related aspects of the data collection project. Elements should be omitted only when they are inappropriate for the project or when absence of those elements will not affect the quality of data obtained for the project (see reference 1).

The role and importance of DQOs and project documentation are discussed below in Sections 2.1 through 2.6. Management and organization play a critical role in determining the effectiveness of a QA/QC program and ensuring that all required procedures are followed. Section 2.7 discusses the elements of an organization's QA program that have been found to ensure an effective program. Field operations and laboratory operations (along with applicable QC procedures) are discussed in Sections 3 and 4, respectively.

2.1 DATA QUALITY OBJECTIVES

Data quality objectives (DQOs) for the data collection activity describe the overall level of uncertainty that a decision-maker is willing to accept in results derived from environmental data. This uncertainty is used to specify the quality of the measurement data required, usually in terms of objectives for precision, bias, representativeness, comparability and completeness. The DQOs should be defined prior to the initiation of the field and laboratory work. The field and laboratory organizations performing the work should be aware of the DQOs so that their personnel may make informed decisions during the course of the project to attain those DQOs. More detailed information on DQOs is available from the U.S. EPA Quality Assurance Management Staff (QAMS) (see references 2 and 4).

2.2 PROJECT OBJECTIVES

A statement of the project objectives and how the objectives are to be attained should be concisely stated and sufficiently detailed to permit clear understanding by all parties involved in the data collection effort. This includes a statement of what problem is to be solved and the information required

in the process. It also includes appropriate statements of the DQOs (i.e., the acceptable level of uncertainty in the information).

2.3 SAMPLE COLLECTION

Sampling procedures, locations, equipment, and sample preservation and handling requirements should be specified in the QAPjP. Further details on quality assurance procedures for field operations are described in Section 3 of this chapter. The OSW is developing policies and procedures for sampling in a planned revision of Chapter Nine of this manual. Specific procedures for groundwater sampling are provided in Chapter Eleven of this manual.

2.4 ANALYSIS AND TESTING

Analytes and properties of concern, analytical and testing procedures to be employed, required detection limits, and requirements for precision and bias should be specified. All applicable regulatory requirements and the project DQOs should be considered when developing the specifications. Further details on the procedures for analytical operations are described in Section 4 of this chapter.

2.5 QUALITY CONTROL

The quality assurance program should address both field and laboratory activities. Quality control procedures should be specified for estimating the precision and bias of the data. Recommended minimum requirements for QC samples have been established by EPA and should be met in order to satisfy recommended minimum criteria for acceptable data quality. Further details on procedures for field and laboratory operations are described in Sections 3 and 4, respectively, of this chapter.

2.6 PROJECT DOCUMENTATION

Documents should be prepared and maintained in conjunction with the data collection effort. Project documentation should be sufficient to allow review of all aspects of the work being performed. The QAPjP discussed in Sections 3 and 4 is one important document that should be maintained.

The length of storage time for project records should comply with regulatory requirements, organizational policy, or project requirements, whichever is more stringent. It is recommended that documentation be stored for three years from submission of the project final report.

Documentation should be secured in a facility that adequately addresses/minimizes its deterioration for the length of time that it is to be retained. A system allowing for the expedient retrieval of information should exist.

Access to archived information should be controlled to maintain the integrity of the data. Procedures should be developed to identify those individuals with access to the data.

2.7 ORGANIZATION PERFORMING FIELD OR LABORATORY OPERATIONS

Proper design and structure of the organization facilitates effective and efficient transfer of information and helps to prevent important procedures from being overlooked.

The organizational structure, functional responsibilities, levels of authority, job descriptions, and lines of communication for all project activities should be established and documented. One person may cover more than one organizational function. Each project participant should have a clear understanding of his or her duties and responsibilities and the relationship of those responsibilities to the overall data collection effort.

The management of each organization participating in a project involving data collection activities should establish that organization's operational and QA policies. This information should be documented in the QAPjP. The management should ensure that (1) the appropriate methodologies are followed as documented in the QAPjPs; (2) personnel clearly understand their duties and responsibilities; (3) each staff member has access to appropriate project documents; (4) any deviations from the QAPjP are communicated to the project management and documented; and (5) communication occurs between the field, laboratory, and project management, as specified in the QAPjP. In addition, each organization should ensure that their activities do not increase the risk to humans or the environment at or about the project location. Certain projects may require specific policies or a Health and Safety Plan to provide this assurance.

The management of the participating field or laboratory organization should establish personnel qualifications and training requirements for the project. Each person participating in the project should have the education, training, technical knowledge, and experience, or a combination thereof, to enable that individual to perform assigned functions. Training should be provided for each staff member as necessary to perform their functions properly. Personnel qualifications should be documented in terms of education, experience, and training, and periodically reviewed to ensure adequacy to current responsibilities.

Each participating field organization or laboratory organization should have a designated QA function (i.e., a team or individual trained in QA) to monitor operations to ensure that the equipment, personnel, activities, procedures, and documentation conform with the QAPjP. To the extent possible, the QA monitoring function should be entirely separate from, and independent of, personnel engaged in the work being monitored. The QA function should be responsible for the QA review.

2.7.1 Performance Evaluation

Performance evaluation studies are used to measure the performance of the laboratory on unknown samples. Performance evaluation samples are typically submitted to the laboratory as blind samples by an independent outside source. The results are compared to predetermined acceptance limits. Performance evaluation samples can also be submitted to the laboratory as part of the QA function during internal assessment of laboratory performance. Records of all performance evaluation studies should be maintained by the laboratory. Problems identified through participation in performance evaluation studies should be immediately investigated and corrected.

2.7.2 Internal Assessment by QA Function

Personnel performing field and laboratory activities are responsible for continually monitoring individual compliance with the QAPjP. The QA function should review procedures, results and calculations to determine compliance with the QAPjP. The results of this internal assessment should be reported to management with requirements for a plan to correct observed deficiencies.

2.7.3 External Assessment

The field and laboratory activities may be reviewed by personnel external to the organization. Such an assessment is an extremely valuable method for identifying overlooked problems. The results of the external assessment should be submitted to management with requirements for a plan to correct observed deficiencies.

2.7.4 On-Site Evaluation

On-site evaluations may be conducted as part of both internal and external assessments. The focus of an on-site evaluation is to evaluate the degree of conformance of project activities with the applicable QAPjP. On-site evaluations may include, but are not limited to, a complete review of facilities, staff, training, instrumentation, procedures, methods, sample collection, analyses, QA policies and procedures related to the generation of environmental data. Records of each evaluation should include the date of the evaluation, location, the areas reviewed, the person performing the evaluation, findings and problems, and actions recommended and taken to resolve problems. Any problems identified that are likely to affect data integrity should be brought immediately to the attention of management.

2.7.4.1 Field Activities

The review of field activities should be conducted by one or more persons knowledgeable in the activities being reviewed and include evaluating, at a minimum, the following subjects:

Completeness of Field Reports -- This review determines whether all requirements for field activities in the QAPjP have been fulfilled, that complete records exist for each field activity, and that the procedures

specified in the QAPjP have been implemented. Emphasis on field documentation will help assure sample integrity and sufficient technical information to recreate each field event. The results of this completeness check should be documented, and environmental data affected by incomplete records should be identified.

Identification of Valid Samples -- This review involves interpretation and evaluation of the field records to detect problems affecting the representativeness of environmental samples. Examples of items that might indicate potentially invalid samples include improper well development, improperly screened wells, instability of pH or conductivity, and collection of volatiles near internal combustion engines. The field records should be evaluated against the QAPjP and SOPs. The reviewer should document the sample validity and identify the environmental data associated with any poor or incorrect field work.

Correlation of Field Test Data -- This review involves comparing any available results of field measurements obtained by more than one method. For example, surface geophysical methods should correlate with direct methods of site geologic characterization such as lithologic logs constructed during drilling operations.

Identification of Anomalous Field Test Data -- This review identifies any anomalous field test data. For example, a water temperature for one well that is 5 degrees higher than any other well temperature in the same aquifer should be noted. The reviewer should evaluate the impact of anomalous field measurement results on the associated environmental data.

Validation of Field Analyses -- This review validates and documents all data from field analysis that are generated *in situ* or from a mobile laboratory as specified in Section 2.7.4.2. The reviewer should document whether the QC checks meet the acceptance criteria, and whether corrective actions were taken for any analysis performed when acceptance criteria were exceeded.

2.7.4.2 Laboratory Activities

The review of laboratory data should be conducted by one or more persons knowledgeable in laboratory activities and include evaluating, at a minimum, the following subjects:

Completeness of Laboratory Records -- This review determines whether: (1) all samples and analyses required by the QAPjP have been processed, (2) complete records exist for each analysis and the associated QC samples, and that (3) the procedures specified in the QAPjP have been implemented. The results of the completeness check should be documented, and environmental data affected by incomplete records should be identified.

Evaluation of Data with Respect to Detection and Quantitation Limits -- This review compares analytical results to required quantitation limits. Reviewers should document instances where detection or quantitation limits

exceed regulatory limits, action levels, or target concentrations specified in the QAPjP.

Evaluation of Data with Respect to Control Limits -- This review compares the results of QC and calibration check samples to control criteria. Corrective action should be implemented for data not within control limits. The reviewer should check that corrective action reports, and the results of reanalysis, are available. The review should determine whether samples associated with out-of-control QC data are identified in a written record of the data review, and whether an assessment of the utility of such analytical results is recorded.

Review of Holding Time Data -- This review compares sample holding times to those required by the QAPjP, and notes all deviations.

Review of Performance Evaluation (PE) Results -- PE study results can be helpful in evaluating the impact of out-of-control conditions. This review documents any recurring trends or problems evident in PE studies and evaluates their effect on environmental data.

Correlation of Laboratory Data -- This review determines whether the results of data obtained from related laboratory tests, e.g., Purgeable Organic Halides (POX) and Volatile Organics, are documented, and whether the significance of any differences is discussed in the reports.

2.7.5 QA Reports

There should be periodic reporting of pertinent QA/QC information to the project management to allow assessment of the overall effectiveness of the QA program. There are three major types of QA reports to project management:

Periodic Report on Key QA Activities -- Provides summary of key QA activities during the period, stressing measures that are being taken to improve data quality; describes significant quality problems observed and corrective actions taken; reports information regarding any changes in certification/accreditation status; describes involvement in resolution of quality issues with clients or agencies; reports any QA organizational changes; and provides notice of the distribution of revised documents controlled by the QA organization (i.e., procedures).

Report on Measurement Quality Indicators -- Includes the assessment of QC data gathered over the period, the frequency of analyses repeated due to unacceptable QC performance, and, if possible, the reason for the unacceptable performance and corrective action taken.

Reports on QA Assessments -- Includes the results of the assessments and the plan for correcting identified deficiencies; submitted immediately following any internal or external on-site evaluation or upon receipt of the results of any performance evaluation studies.

3.0 FIELD OPERATIONS

The field operations should be conducted in such a way as to provide reliable information that meets the DQOs. To achieve this, certain minimal policies and procedures should be implemented. The OSW is considering revisions of Chapter Nine and Eleven of this manual. Supplemental information and guidance is available in the RCRA Ground-Water Monitoring Technical Enforcement Guidance Document (TEGD) (Reference 3). The project documentation should contain the information specified below.

3.1 FIELD LOGISTICS

The QAPjP should describe the type(s) of field operations to be performed and the appropriate area(s) in which to perform the work. The QAPjP should address ventilation, protection from extreme weather and temperatures, access to stable power, and provision for water and gases of required purity.

Whenever practical, the sampling site facilities should be examined prior to the start of work to ensure that all required items are available. The actual area of sampling should be examined to ensure that trucks, drilling equipment, and personnel have adequate access to the site.

The determination as to whether sample shipping is necessary should be made during planning for the project. This need is established by evaluating the analyses to be performed, sample holding times, and location of the site and the laboratory. Shipping or transporting of samples to a laboratory should be done within a timeframe such that recommended holding times are met.

Samples should be packaged, labelled, preserved (e.g., preservative added, iced, etc.), and documented in an area which is free of contamination and provides for secure storage. The level of custody and whether sample storage is needed should be addressed in the QAPjP.

Storage areas for solvents, reagents, standards, and reference materials should be adequate to preserve their identity, concentration, purity, and stability prior to use.

Decontamination of sampling equipment may be performed at the location where sampling occurs, prior to going to the sampling site, or in designated areas near the sampling site. Project documentation should specify where and how this work is accomplished. If decontamination is to be done at the site, water and solvents of appropriate purity should be available. The method of accomplishing decontamination, including the required materials, solvents, and water purity should be specified.

During the sampling process and during on-site or <u>in situ</u> analyses, waste materials are sometimes generated. The method for storage and disposal of these waste materials that complies with applicable local, state and Federal regulations should be specified. Adequate facilities should be provided for the collection and storage of all wastes, and these facilities should be operated so

as to minimize environmental contamination. Waste storage and disposal facilities should comply with applicable federal, state, and local regulations.

The location of long-term and short-term storage for field records, and the measures to ensure the integrity of the data should be specified.

3.2 EQUIPMENT/INSTRUMENTATION

The equipment, instrumentation, and supplies at the sampling site should be specified and should be appropriate to accomplish the activities planned. The equipment and instrumentation should meet the requirements of specifications, methods, and procedures as specified in the QAPjP.

3.3 OPERATING PROCEDURES

The QAPjP should describe or make reference to all field activities that may affect data quality. For routinely performed activities, standard operating procedures (SOPs) are often prepared to ensure consistency and to save time and effort in preparing QAPjPs. Any deviation from an established procedure during a data collection activity should be documented. The procedures should be available for the indicated activities, and should include, at a minimum, the information described below.

3.3.1 Sample Management

The numbering and labeling system, chain-of-custody procedures, and how the samples are to be tracked from collection to shipment or receipt by the laboratory should be specified. Sample management procedures should also specify the holding times, volumes of sample required by the laboratory, required preservatives, and shipping requirements.

3.3.2 Reagent/Standard Preparation

The procedures describing how to prepare standards and reagents should be specified. Information concerning specific grades of materials used in reagent and standard preparation, appropriate glassware and containers for preparation and storage, and labeling and record keeping for stocks and dilutions should be included.

3.3.3 Decontamination

The procedures describing decontamination of field equipment before and during the sample collection process should be specified. These procedures should include cleaning materials used, the order of washing and rinsing with the cleaning materials, requirements for protecting or covering cleaned equipment, and procedures for disposing of cleaning materials.

3.3.4 Sample Collection

The procedures describing how the sampling operations are actually performed in the field should be specified. A simple reference to standard methods is not sufficient, unless a procedure is performed exactly as described in the published method. Methods from source documents published by the EPA, American Society for Testing and Materials, U.S. Department of the Interior, National Water Well Association, American Petroleum Institute, or other recognized organizations with appropriate expertise should be used, if possible. The procedures for sample collection should include at least the following:

- Applicability of the procedure,
- Equipment required,
- Detailed description of procedures to be followed in collecting the samples,
- Common problems encountered and corrective actions to be followed, and
- Precautions to be taken.

3.3.5 Field Measurements

The procedures describing all methods used in the field to determine a chemical or physical parameter should be described in detail. The procedures should address criteria from Section 4, as appropriate.

3.3.6 Equipment Calibration And Maintenance

The procedures describing how to ensure that field equipment and instrumentation are in working order should be specified. These describe calibration procedures and schedules, maintenance procedures and schedules, maintenance logs, and service arrangements for equipment. Calibration and maintenance of field equipment and instrumentation should be in accordance with manufacturers' specifications or applicable test specifications and should be documented.

3.3.7 Corrective Action

The procedures describing how to identify and correct deficiencies in the sample collection process should be specified. These should include specific steps to take in correcting deficiencies such as performing additional decontamination of equipment, resampling, or additional training of field personnel. The procedures should specify that each corrective action should be documented with a description of the deficiency and the corrective action taken, and should include the person(s) responsible for implementing the corrective action.

3.3.8 Data Reduction and Validation

The procedures describing how to compute results from field measurements and to review and validate these data should be specified. They should include all formulas used to calculate results and procedures used to independently verify that field measurement results are correct.

3.3.9 Reporting

The procedures describing the process for reporting the results of field activities should be specified.

3.3.10 Records Management

The procedures describing the means for generating, controlling, and archiving project-specific records and field operations records should be specified. These procedures should detail record generation and control and the requirements for record retention, including type, time, security, and retrieval and disposal authorities.

Project-specific records relate to field work performed for a project. These records may include correspondence, chain-of-custody records, field notes, all reports issued as a result of the work, and procedures used.

Field operations records document overall field operations and may include equipment performance and maintenance logs, personnel files, general field procedures, and corrective action reports.

3.3.11 Waste Disposal

The procedures describing the methods for disposal of waste materials resulting from field operations should be specified.

3.4 FIELD QA AND QC REQUIREMENTS

The QAPjP should describe how the following elements of the field QC program will be implemented.

3.4.1 Control Samples

Control samples are QC samples that are introduced into a process to monitor the performance of the system. Control samples, which may include blanks (e.g., trip, equipment, and laboratory), duplicates, spikes, analytical standards, and reference materials, can be used in different phases of the data collection process beginning with sampling and continuing through transportation, storage, and analysis.

Each day of sampling, at least one field duplicate and one equipment rinsate should be collected for each matrix sampled. If this frequency is not appropriate for the sampling equipment and method, then the appropriate changes

should be clearly identified in the QAPjP. When samples are collected for volatile organic analysis, a trip blank is also recommended for each day that samples are collected. In addition, for each sampling batch (20 samples of one matrix type), enough volume should be collected for at least one sample so as to allow the laboratory to prepare one matrix spike and either one matrix duplicate or one matrix spike duplicate for each analytical method employed. This means that the following control samples are recommended:

- Field duplicate (one per day per matrix type)
- Equipment rinsate (one per day per matrix type)
- Trip blank (one per day, volatile organics only)
- Matrix spike (one per batch [20 samples of each matrix type])
- Matrix duplicate or matrix spike duplicate (one per batch)

Additional control samples may be necessary in order to assure data quality to meet the project-specific DQOs.

3.4.2 Acceptance Criteria

Procedures should be in place for establishing acceptance criteria for field activities described in the QAPjP. Acceptance criteria may be qualitative or quantitative. Field events or data that fall outside of established acceptance criteria may indicate a problem with the sampling process that should be investigated.

3.4.3 Deviations

All deviations from plan should be documented as to the extent of, and reason for, the deviation. Any activity not performed in accordance with procedures or QAPjPs is considered a deviation from plan. Deviations from plan may or may not affect data quality.

3.4.4 Corrective Action

Errors, deficiencies, deviations, certain field events, or data that fall outside established acceptance criteria should be investigated. In some instances, corrective action may be needed to resolve the problem and restore proper functioning to the system. The investigation of the problem and any subsequent corrective action taken should be documented.

3.4.5 Data Handling

All field measurement data should be reduced according to protocols described or referenced in the QAPjP. Computer programs used for data reduction should be validated before use and verified on a regular basis. All information used in the calculations should be recorded to enable reconstruction of the final result at a later date.

Data should be reported in accordance with the requirements of the end-user as described in the QAPjP.

3.5 QUALITY ASSURANCE REVIEW

The QA Review consists of internal and external assessments to ensure that QA/QC procedures are in use and to ensure that field staff conform to these procedures. QA review should be conducted as deemed appropriate and necessary.

3.6 FIELD RECORDS

Records provide the direct evidence and support for the necessary technical interpretations, judgments, and discussions concerning project activities. These records, particularly those that are anticipated to be used as evidentiary data, should directly support current or ongoing technical studies and activities and should provide the historical evidence needed for later reviews and analyses. Records should be legible, identifiable, and retrievable and protected against damage, deterioration, or loss. The discussion in this section (3.6) outlines recommended procedures for record keeping. Organizations which conduct field sampling should develop appropriate record keeping procedures which satisfy relevant technical and legal requirements.

Field records generally consist of bound field notebooks with prenumbered pages, sample collection forms, personnel qualification and training forms, sample location maps, equipment maintenance and calibration forms, chain-of-custody forms, sample analysis request forms, and field change request forms. All records should be written in indelible ink.

Procedures for reviewing, approving, and revising field records should be clearly defined, with the lines of authority included. It is recommended that all documentation errors should be corrected by drawing a single line through the error so it remains legible and should be initialed by the responsible individual, along with the date of change. The correction should be written adjacent to the error.

Records should include (but are not limited to) the following:

Calibration Records & Traceability of Standards/Reagents -- Calibration is a reproducible reference point to which all sample measurements can be correlated. A sound calibration program should include provisions for documentation of frequency, conditions, standards, and records reflecting the calibration history of a measurement system. The accuracy of the calibration standards is important because all data will be in reference to the standards used. A program for verifying and documenting the accuracy of all working standards against primary grade standards should be routinely followed.

Sample Collection -- To ensure maximum utility of the sampling effort and resulting data, documentation of the sampling protocol, as performed in the field, is essential. It is recommended that sample collection records contain, at a minimum, the names of persons conducting the activity, sample number, sample location, equipment used, climatic conditions, documentation of adherence to protocol, and unusual observations. The

actual sample collection record is usually one of the following: a bound field notebook with prenumbered pages, a pre-printed form, or digitized information on a computer tape or disc.

Chain-of-Custody Records -- The chain-of-custody involving the possession of samples from the time they are obtained until they are disposed or shipped off-site should be documented as specified in the QAPjP and should include the following information: (1) the project name; (2) signatures of samplers; (3) the sample number, date and time of collection, and grab or composite sample designation; (4) signatures of individuals involved in sample transfer; and (5) if applicable, the air bill or other shipping number.

Maps and Drawings -- Project planning documents and reports often contain maps. The maps are used to document the location of sample collection points and monitoring wells and as a means of presenting environmental data. Information used to prepare maps and drawings is normally obtained through field surveys, property surveys, surveys of monitoring wells, aerial photography or photogrammetric mapping. The final, approved maps and/or drawings should have a revision number and date and should be subject to the same controls as other project records.

QC Samples -- Documentation for generation of QC samples, such as trip and equipment rinsate blanks, duplicate samples, and any field spikes should be maintained.

Deviations -- All deviations from procedural documents and the QAPjP should be recorded in the site logbook.

Reports -- A copy of any report issued and any supporting documentation should be retained.

4.0 LABORATORY OPERATIONS

The laboratory should conduct its operations in such a way as to provide reliable information. To achieve this, certain minimal policies and procedures should be implemented.

4.1 FACILITIES

The QAPjP should address all facility-related issues that may impact project data quality. Each laboratory should be of suitable size and construction to facilitate the proper conduct of the analyses. Adequate bench space or working area per analyst should be provided. The space requirement per analyst depends on the equipment or apparatus that is being utilized, the number of samples that the analyst is expected to handle at any one time, and the number of operations that are to be performed concurrently by a single analyst. Other issues to be considered include, but are not limited to, ventilation, lighting,

control of dust and drafts, protection from extreme temperatures, and access to a source of stable power.

Laboratories should be designed so that there is adequate separation of functions to ensure that no laboratory activity has an adverse effect on the analyses. The laboratory may require specialized facilities such as a perchloric acid hood or glovebox.

Separate space for laboratory operations and appropriate ancillary support should be provided, as needed, for the performance of routine and specialized procedures.

As necessary to ensure secure storage and prevent contamination or misidentification, there should be adequate facilities for receipt and storage of samples. The level of custody required and any special requirements for storage such as refrigeration should be described in planning documents.

Storage areas for reagents, solvents, standards, and reference materials should be adequate to preserve their identity, concentration, purity, and stability.

Adequate facilities should be provided for the collection and storage of all wastes, and these facilities should be operated so as to minimize environmental contamination. Waste storage and disposal facilities should comply with applicable federal, state, and local regulations.

The location of long-term and short-term storage of laboratory records and the measures to ensure the integrity of the data should be specified.

4.2 EQUIPMENT/INSTRUMENTATION

Equipment and instrumentation should meet the requirements and specifications of the specific test methods and other procedures as specified in the QAPjP. The laboratory should maintain an equipment/instrument description list that includes the manufacturer, model number, year of purchase, accessories, and any modifications, updates, or upgrades that have been made.

4.3 OPERATING PROCEDURES

The QAPjP should describe or make reference to all laboratory activities that may affect data quality. For routinely performed activities, SOPs are often prepared to ensure consistency and to save time and effort in preparing QAPjPs. Any deviation from an established procedure during a data collection activity should be documented. It is recommended that procedures be available for the indicated activities, and include, at a minimum, the information described below.

4.3.1 Sample Management

The procedures describing the receipt, handling, scheduling, and storage of samples should be specified.

Sample Receipt and Handling -- These procedures describe the precautions to be used in opening sample shipment containers and how to verify that chain-of-custody has been maintained, examine samples for damage, check for proper preservatives and temperature, and log samples into the laboratory sample streams.

Sample Scheduling -- These procedures describe the sample scheduling in the laboratory and includes procedures used to ensure that holding time requirements are met.

Sample Storage -- These procedures describe the storage conditions for all samples, verification and documentation of daily storage temperature, and how to ensure that custody of the samples is maintained while in the laboratory.

4.3.2 Reagent/Standard Preparation

The procedures describing how to prepare standards and reagents should be specified. Information concerning specific grades of materials used in reagent and standard preparation, appropriate glassware and containers for preparation and storage, and labeling and recordkeeping for stocks and dilutions should be included.

4.3.3 General Laboratory Techniques

The procedures describing all essentials of laboratory operations that are not addressed elsewhere should be specified. These techniques should include, but are not limited to, glassware cleaning procedures, operation of analytical balances, pipetting techniques, and use of volumetric glassware.

4.3.4 Test Methods

Procedures for test methods describing how the analyses are actually performed in the laboratory should be specified. A simple reference to standard methods is not sufficient, unless the analysis is performed exactly as described in the published method. Whenever methods from SW-846 are not appropriate, recognized methods from source documents published by the EPA, American Public Health Association (APHA), American Society for Testing and Materials (ASTM), the National Institute for Occupational Safety and Health (NIOSH), or other recognized organizations with appropriate expertise should be used, if possible. The documentation of the actual laboratory procedures for analytical methods should include the following:

Sample Preparation and Analysis Procedures -- These include applicable holding time, extraction, digestion, or preparation steps as appropriate to the method; procedures for determining the appropriate dilution to

analyze; and any other information required to perform the analysis accurately and consistently.

Instrument Standardization -- This includes concentration(s) and frequency of analysis of calibration standards, linear range of the method, and calibration acceptance criteria.

Sample Data -- This includes recording requirements and documentation including sample identification number, analyst, data verification, date of analysis and verification, and computational method(s).

Precision and Bias -- This includes all analytes for which the method is applicable and the conditions for use of this information.

Detection and Reporting Limits -- This includes all analytes in the method.

Test-Specific QC -- This describes QC activities applicable to the specific test and references any applicable QC procedures.

4.3.5 Equipment Calibration and Maintenance

The procedures describing how to ensure that laboratory equipment and instrumentation are in working order should be specified. These procedures include calibration procedures and schedules, maintenance procedures and schedules, maintenance logs, service arrangements for all equipment, and spare parts available in-house. Calibration and maintenance of laboratory equipment and instrumentation should be in accordance with manufacturers' specifications or applicable test specifications and should be documented.

4.3.6 QC

The type, purpose, and frequency of QC samples to be analyzed in the laboratory and the acceptance criteria should be specified. Information should include the applicability of the QC sample to the analytical process, the statistical treatment of the data, and the responsibility of laboratory staff and management in generating and using the data. Further details on development of project-specific QC protocols are described in Section 4.4.

4.3.7 Corrective Action

The procedures describing how to identify and correct deficiencies in the analytical process should be specified. These should include specific steps to take in correcting the deficiencies such as preparation of new standards and reagents, recalibration and restandardization of equipment, reanalysis of samples, or additional training of laboratory personnel in methods and procedures. The procedures should specify that each corrective action should be documented with a description of the deficiency and the corrective action taken, and should include the person(s) responsible for implementing the corrective action.

4.3.8 Data Reduction and Validation

The procedures describing how to review and validate the data should be specified. They should include procedures for computing and interpreting the results from QC samples, and independent procedures to verify that the analytical results are reported correctly. In addition, routine procedures used to monitor precision and bias, including evaluations of reagent, equipment rinsate, and trip blanks, calibration standards, control samples, duplicate and matrix spike samples, and surrogate recovery, should be detailed in the procedures. More detailed validation procedures should be performed when required in the contract or QAPjP.

4.3.9 Reporting

The procedures describing the process for reporting the analytical results should be specified.

4.3.10 Records Management

The procedures describing the means for generating, controlling, and archiving laboratory records should be specified. The procedures should detail record generation and control, and the requirements for record retention, including type, time, security, and retrieval and disposal authorities.

Project-specific records may include correspondence, chain-of-custody records, request for analysis, calibration data records, raw and finished analytical and QC data, data reports, and procedures used.

Laboratory operations records may include laboratory notebooks, instrument performance logs and maintenance logs in bound notebooks with prenumbered pages; laboratory benchsheets; software documentation; control charts; reference material certification; personnel files; laboratory procedures; and corrective action reports.

4.3.11 Waste Disposal

The procedures describing the methods for disposal of chemicals including standard and reagent solutions, process waste, and samples should be specified.

4.4 LABORATORY QA AND QC PROCEDURES

The QAPjP should describe how the following required elements of the laboratory QC program are to be implemented.

4.4.1 Method Proficiency

Procedures should be in place for demonstrating proficiency with each analytical method routinely used in the laboratory. These should include procedures for demonstrating the precision and bias of the method as performed by the laboratory and procedures for determining the method detection limit

(MDL). All terminology, procedures and frequency of determinations associated with the laboratory's establishment of the MDL and the reporting limit should be well-defined and well-documented. Documented precision, bias, and MDL information should be maintained for all methods performed in the laboratory.

4.4.2 Control Limits

Procedures should be in place for establishing and updating control limits for analysis. Control limits should be established to evaluate laboratory precision and bias based on the analysis of control samples. Typically, control limits for bias are based on the historical mean recovery plus or minus three standard deviation units, and control limits for precision range from zero (no difference between duplicate control samples) to the historical mean relative percent difference plus three standard deviation units. Procedures should be in place for monitoring historical performance and should include graphical (control charts) and/or tabular presentations of the data.

4.4.3 Laboratory Control Procedures

Procedures should be in place for demonstrating that the laboratory is in control during each data collection activity. Analytical data generated with laboratory control samples that fall within prescribed limits are judged to be generated while the laboratory was in control. Data generated with laboratory control samples that fall outside the established control limits are judged to be generated during an "out-of-control" situation. These data are considered suspect and should be repeated or reported with qualifiers.

Laboratory Control Samples -- Laboratory control samples should be analyzed for each analytical method when appropriate for the method. A laboratory control sample consists of either a control matrix spiked with analytes representative of the target analytes or a certified reference material.

Laboratory control sample(s) should be analyzed with each batch of samples processed to verify that the precision and bias of the analytical process are within control limits. The results of the laboratory control sample(s) are compared to control limits established for both precision and bias to determine usability of the data.

Method Blank -- When appropriate for the method, a method blank should be analyzed with each batch of samples processed to assess contamination levels in the laboratory. Guidelines should be in place for accepting or rejecting data based on the level of contamination in the blank.

Procedures should be in place for documenting the effect of the matrix on method performance. When appropriate for the method, there should be at least one matrix spike and either one matrix duplicate or one matrix spike duplicate per analytical batch. Additional control samples may be necessary to assure data quality to meet the project-specific DQOs.

Matrix-Specific Bias -- Procedures should be in place for determining the bias of the method due to the matrix. These procedures should include preparation and analysis of matrix spikes, selection and use of surrogates for organic methods, and the method of standard additions for metal and inorganic methods. When the concentration of the analyte in the sample is greater than 0.1%, no spike is necessary.

Matrix-Specific Precision -- Procedures should be in place for determining the precision of the method for a specific matrix. These procedures should include analysis of matrix duplicates and/or matrix spike duplicates. The frequency of use of these techniques should be based on the DQO for the data collection activity.

Matrix-Specific Detection Limit -- Procedures should be in place for determining the MDL for a specific matrix type (e.g., wastewater treatment sludge, contaminated soil, etc).

4.4.4 Deviations

Any activity not performed in accordance with laboratory procedures or QAPjPs is considered a deviation from plan. All deviations from plan should be documented as to the extent of, and reason for, the deviation.

4.4.5 Corrective Action

Errors, deficiencies, deviations, or laboratory events or data that fall outside of established acceptance criteria should be investigated. In some instances, corrective action may be needed to resolve the problem and restore proper functioning to the analytical system. The investigation of the problem and any subsequent corrective action taken should be documented.

4.4.6 Data Handling

Data resulting from the analyses of samples should be reduced according to protocols described in the laboratory procedures. Computer programs used for data reduction should be validated before use and verified on a regular basis. All information used in the calculations (e.g., raw data, calibration files, tuning records, results of standard additions, interference check results, and blank- or background-correction protocols) should be recorded in order to enable reconstruction of the final result at a later date. Information on the preparation of the sample (e.g., weight or volume of sample used, percent dry weight for solids, extract volume, dilution factor used) should also be maintained in order to enable reconstruction of the final result at a later date.

All data should be reviewed by a second analyst or supervisor according to laboratory procedures to ensure that calculations are correct and to detect transcription errors. Spot checks should be performed on computer calculations to verify program validity. Errors detected in the review process should be referred to the analyst(s) for corrective action. Data should be reported in accordance with the requirements of the end-user. It is recommended that the supporting documentation include at a minimum:

- Laboratory name and address.
- Sample information (including unique sample identification, sample collection date and time, date of sample receipt, and date(s) of sample preparation and analysis).
- Analytical results reported with an appropriate number of significant figures.
- Detection limits that reflect dilutions, interferences, or correction for equivalent dry weight.
- Method reference.
- Appropriate QC results (correlation with sample batch should be traceable and documented).
- Data qualifiers with appropriate references and narrative on the quality of the results.

4.5 QUALITY ASSURANCE REVIEW

The QA review consists of internal and external assessments to ensure that QA/QC procedures are in use and to ensure that laboratory staff conform to these procedures. QA review should be conducted as deemed appropriate and necessary.

4.6 LABORATORY RECORDS

Records provide the direct evidence and support for the necessary technical interpretations, judgements, and discussions concerning project activities. These records, particularly those that are anticipated to be used as evidentiary data, should directly support technical studies and activities, and provide the historical evidence needed for later reviews and analyses. Records should be legible, identifiable, and retrievable, and protected against damage, deterioration, or loss. The discussion in this section (4.6) outlines recommended procedures for record keeping. Organizations which conduct field sampling should develop appropriate record keeping procedures which satisfy relevant technical and legal requirements.

Laboratory records generally consist of bound notebooks with prenumbered pages, personnel qualification and training forms, equipment maintenance and calibration forms, chain-of-custody forms, sample analysis request forms, and analytical change request forms. All records should be written in indelible ink.

Procedures for reviewing, approving, and revising laboratory records should be clearly defined, with the lines of authority included. Any documentation errors should be corrected by drawing a single line through the error so that it remains legible and should be initialed by the responsible individual, along with the date of change. The correction is written adjacent to the error.

Strip-chart recorder printouts should be signed by the person who performed the instrumental analysis. If corrections need to be made in computerized data, a system parallel to the corrections for handwritten data should be in place.

Records of sample management should be available to permit the re-creation of an analytical event for review in the case of an audit or investigation of a dubious result.

Laboratory records should include, at least, the following:

Operating Procedures -- Procedures should be available to those performing the task outlined. Any revisions to laboratory procedures should be written, dated, and distributed to all affected individuals to ensure implementation of changes. Areas covered by operating procedures are given in Sections 3.3 and 4.3.

Quality Assurance Plans -- The QAPjP should be on file.

Equipment Maintenance Documentation -- A history of the maintenance record of each system serves as an indication of the adequacy of maintenance schedules and parts inventory. As appropriate, the maintenance guidelines of the equipment manufacturer should be followed. When maintenance is necessary, it should be documented in either standard forms or in logbooks. Maintenance procedures should be clearly defined and written for each measurement system and required support equipment.

Proficiency -- Proficiency information on all compounds reported should be maintained and should include (1) precision; (2) bias; (3) method detection limits; (4) spike recovery, where applicable; (5) surrogate recovery, where applicable; (6) checks on reagent purity, where applicable; and (7) checks on glassware cleanliness, where applicable.

Calibration Records & Traceability of Standards/Reagents -- Calibration is a reproducible reference point to which all sample measurements can be correlated. A sound calibration program should include provisions for documenting frequency, conditions, standards, and records reflecting the calibration history of a measurement system. The accuracy of the calibration standards is important because all data will be in reference to the standards used. A program for verifying and documenting the accuracy and traceability of all working standards against appropriate primary grade standards or the highest quality standards available should be routinely followed.

Sample Management -- All required records pertaining to sample management should be maintained and updated regularly. These include chain-of-custody forms, sample receipt forms, and sample disposition records.

Original Data -- The raw data and calculated results for all samples should be maintained in laboratory notebooks, logs, benchsheets, files or other sample tracking or data entry forms. Instrumental output should be stored in a computer file or a hardcopy report.

QC Data -- The raw data and calculated results for all QC and field samples and standards should be maintained in the manner described in the preceding paragraph. Documentation should allow correlation of sample results with associated QC data. Documentation should also include the source and lot numbers of standards for traceability. QC samples include, but are not limited to, control samples, method blanks, matrix spikes, and matrix spike duplicates.

Correspondence -- Project correspondence can provide evidence supporting technical interpretations. Correspondence pertinent to the project should be kept and placed in the project files.

Deviations -- All deviations from procedural and planning documents should be recorded in laboratory notebooks. Deviations from QAPjPs should be reviewed and approved by the authorized personnel who performed the original technical review or by their designees.

Final Report -- A copy of any report issued and any supporting documentation should be retained.

5.0 DEFINITIONS

The following terms are defined for use in this document:

ACCURACY — The closeness of agreement between an observed value and an accepted reference value. When applied to a set of observed values, accuracy will be a combination of a random component and of a common systematic error (or bias) component.

BATCH: — A group of samples which behave similarly with respect to the sampling or the testing procedures being employed and which are processed as a unit (see Section 3.4.1 for field samples and Section 4.4.3 for laboratory samples). For QC purposes, if the number of samples in a group is greater than 20, then each group of 20 samples or less will all be handled as a separate batch.

BIAS: — The deviation due to matrix effects of the measured value (x_s - x_u) from a known spiked amount. Bias can be assessed by comparing a measured value to an accepted reference value in a sample of known concentration or by determining the recovery of a known amount of contaminant spiked into a sample (matrix spike). Thus, the bias (B) due to matrix effects based on a matrix spike is calculated as:

$$B = (x_s - x_u) - K$$

where:

x_s = measured value for spiked sample,
x_u = measured value for unspiked sample, and
K = known value of the spike in the sample.

Using the following equation yields the percent recovery (%R).

$$\%R = 100\ (x_s - x_u)/\ K$$

BLANK: see Equipment Rinsate, Method Blank, Trip Blank.

CONTROL SAMPLE: A QC sample introduced into a process to monitor the performance of the system.

DATA QUALITY OBJECTIVES (DQOs): A statement of the overall level of uncertainty that a decision-maker is willing to accept in results derived from environmental data (see reference 2, EPA/QAMS, July 16, 1986). This is qualitatively distinct from quality measurements such as precision, bias, and detection limit.

DATA VALIDATION: The process of evaluating the available data against the project DQOs to make sure that the objectives are met. Data validation may be very rigorous, or cursory, depending on project DQOs. The available data reviewed will include analytical results, field QC data and lab QC data, and may also include field records.

DUPLICATE: see Matrix Duplicate, Field Duplicate, Matrix Spike Duplicate.

EQUIPMENT BLANK: see Equipment Rinsate.

EQUIPMENT RINSATE: A sample of analyte-free media which has been used to rinse the sampling equipment. It is collected after completion of decontamination and prior to sampling. This blank is useful in documenting adequate decontamination of sampling equipment.

ESTIMATED QUANTITATION LIMIT (EQL): The lowest concentration that can be reliably achieved within specified limits of precision and accuracy during routine laboratory operating conditions. The EQL is generally 5 to 10 times the MDL. However, it may be nominally chosen within these guidelines to simplify data reporting. For many analytes the EQL analyte concentration is selected as the lowest non-zero standard in the calibration curve. Sample EQLs are highly matrix-dependent. The EQLs in SW-846 are provided for guidance and may not always be achievable.

FIELD DUPLICATES: Independent samples which are collected as close as possible to the same point in space and time. They are two separate samples taken from the same source, stored in separate containers, and analyzed independently. These duplicates are useful in documenting the precision of the sampling process.

LABORATORY CONTROL SAMPLE: A known matrix spiked with compound(s) representative of the target analytes. This is used to document laboratory performance.

MATRIX: The component or substrate (e.g., surface water, drinking water) which contains the analyte of interest.

MATRIX DUPLICATE: An intralaboratory split sample which is used to document the precision of a method in a given sample matrix.

MATRIX SPIKE: An aliquot of sample spiked with a known concentration of target analyte(s). The spiking occurs prior to sample preparation and analysis. A matrix spike is used to document the bias of a method in a given sample matrix.

MATRIX SPIKE DUPLICATES: Intralaboratory split samples spiked with identical concentrations of target analyte(s). The spiking occurs prior to sample preparation and analysis. They are used to document the precision and bias of a method in a given sample matrix.

METHOD BLANK: An analyte-free matrix to which all reagents are added in the same volumes or proportions as used in sample processing. The method blank should be carried through the complete sample preparation and analytical procedure. The method blank is used to document contamination resulting from the analytical process.

For a method blank to be acceptable for use with the accompanying samples, the concentration in the blank of any analyte of concern should not be higher than the highest of either:

(1)The method detection limit, or

(2)Five percent of the regulatory limit for that analyte, or

(3)Five percent of the measured concentration in the sample.

METHOD DETECTION LIMIT (MDL): The minimum concentration of a substance that can be measured and reported with 99% confidence that the analyte concentration is greater than zero and is determined from

analysis of a sample in a given matrix type containing the analyte.

For operational purposes, when it is necessary to determine the MDL in the matrix, the MDL should be determined by multiplying the appropriate one-sided 99% t-statistic by the standard deviation obtained from a minimum of three analyses of a matrix spike containing the analyte of interest at a concentration three to five times the estimated MDL, where the t-statistic is obtained from standard references or the table below.

No. of samples:	t-statistic
3	6.96
4	4.54
5	3.75
6	3.36
7	3.14
8	3.00
9	2.90
10	2.82

Estimate the MDL as follows:
Obtain the concentration value that corresponds to:

a) an instrument signal/noise ratio within the range of 2.5 to 5.0, or

b) the region of the standard curve where there is a significant change in sensitivity (i.e., a break in the slope of the standard curve).

Determine the variance (S^2) for each analyte as follows:

$$s^2 = \frac{1}{n-1}\left[\sum_{i=1}^{n} (x_i - \bar{x})^2\right]$$

where x_i = the ith measurement of the variable x
and $\bar{x}$ = the average value of x;

$$\bar{x} = \frac{1}{n}\sum_{i=1}^{n} x_i$$

Determine the standard deviation (s) for each analyte as follows:

$$s = (S^2)^{1/2}$$

Determine the MDL for each analyte as follows:

$$MDL = t_{(n-1,\ \alpha = .99)}(s)$$

where $t_{(n-1,\ \alpha = .99)}$ is the one-sided t-statistic appropriate for the number of samples used to determine (s), at the 99 percent level.

ORGANIC-FREE REAGENT WATER:

For volatiles, all references to water in the methods refer to water in which an interferant is not observed at the method detection limit of the compounds of interest. Organic-free reagent water can be generated by passing tap water through a carbon filter bed containing about 1 pound of activated carbon. A water purification system may be used to generate organic-free deionized water. Organic-free reagent water may also be prepared by boiling water for 15 minutes and, subsequently, while maintaining the temperature at 90°C, bubbling a contaminant-free inert gas through the water for 1 hour.

For semivolatiles and nonvolatiles, all references to water in the methods refer to water in which an interferant is not observed at the method detection limit of the compounds of interest. Organic-free reagent water can be generated by passing tap water through a carbon filter bed containing about 1 pound of activated carbon. A water purification system may be used to generate organic-free deionized water.

PRECISION:

The agreement among a set of replicate measurements without assumption of knowledge of the true value. Precision is estimated by means of duplicate/replicate analyses. These samples should contain concentrations of analyte above the MDL, and may involve the use of matrix spikes. The most commonly used estimates of precision are the relative standard deviation (RSD) or the coefficient of variation (CV),

$$RSD = CV = 100\ S/\bar{x},$$

where:
$\bar{x}$ = the arithmetic mean of the x_i measurements, and S = variance; and the relative percent difference (RPD) when only two samples are available.

$$RPD = 100\ [(x_1 - x_2)/\{(x_1 + x_2)/2\}].$$

PROJECT: Single or multiple data collection activities that are related through the same planning sequence.

QUALITY ASSURANCE PROJECT PLAN (QAPjP): An orderly assemblage of detailed procedures designed to produce data of sufficient quality to meet the data quality objectives for a specific data collection activity.

RCRA: The Resource Conservation and Recovery Act.

REAGENT BLANK: See Method Blank.

REAGENT GRADE: Analytical reagent (AR) grade, ACS reagent grade, and reagent grade are synonymous terms for reagents which conform to the current specifications of the Committee on Analytical Reagents of the American Chemical Society.

REAGENT WATER: Water that has been generated by any method which would achieve the performance specifications for ASTM Type II water. For organic analyses, see the definition of organic-free reagent water.

REFERENCE MATERIAL: A material containing known quantities of target analytes in solution or in a homogeneous matrix. It is used to document the bias of the analytical process.

SPLIT SAMPLES: Aliquots of sample taken from the same container and analyzed independently. In cases where aliquots of samples are impossible to obtain, field duplicate samples should be taken for the matrix duplicate analysis. These are usually taken after mixing or compositing and are used to document intra- or interlaboratory precision.

STANDARD ADDITION: The practice of adding a known amount of an analyte to a sample immediately prior to analysis. It is typically used to evaluate interferences.

STANDARD CURVE: A plot of concentrations of known analyte standards versus the instrument response to the analyte. Calibration standards are prepared by successively diluting a standard solution to produce working standards which cover the working range of the instrument. Standards should be prepared at the frequency specified in the appropriate

section. The calibration standards should be prepared using the same type of acid or solvent and at the same concentration as will result in the samples following sample preparation. This is applicable to organic and inorganic chemical analyses.

SURROGATE: An organic compound which is similar to the target analyte(s) in chemical composition and behavior in the analytical process, but which is not normally found in environmental samples.

TRIP BLANK: A sample of analyte-free media taken from the laboratory to the sampling site and returned to the laboratory unopened. A trip blank is used to document contamination attributable to shipping and field handling procedures. This type of blank is useful in documenting contamination of volatile organics samples.

6.0 REFERENCES

1. Interim Guidelines and Specifications for Preparing Quality Assurance Project Plans, QAMS-005/80, December 29, 1980, Office of Monitoring Systems and Quality Assurance, ORD, U.S. EPA, Washington, DC 20460.

2. Development of Data Quality Objectives, Description of Stages I and II, July 16, 1986, Quality Assurance Management Staff, ORD, U.S. EPA, Washington, DC 20460.

3. RCRA Ground-Water Monitoring Technical Enforcement Guidance Document, September, 1986, Office of Waste Programs Enforcement. OSWER, U.S. EPA, Washington, DC, 20460.

4. DQO Training Software, Version 6.5, December, 1988, Quality Assurance Management Staff, ORD, U.S. EPA, Washington, DC 20460.

5. Preparing Perfect Project Plans, EPA/600/9-89/087, October 1989, Risk Reduction Engineering Laboratory (Guy Simes), Cincinnati OH.

6. ASTM Method D 1129-77, Specification for Reagent Water. 1991 Annual Book of ASTM Standards. Volume 11.01 Water and Environmental Technology.

7. Generation of Environmental Data Related to Waste Management Activities (Draft). February 1989. ASTM.

INDEX

Accuracy 1, 13, 22, 23*, 24
Batch 12, 19, 21, 23*
Bias 2, 3, 17-20, 22, 23*-25, 28
Blank 11, 12, 14, 18-20, 23*, 24, 25, 28, 29
   Equipment Rinsate 11, 12, 14, 18, 24*
   Method Blank 19, 24, 25*, 28
   Reagent Blank 28*
   Trip Blank 12, 18, 24, 29*
Chain-of-Custody 9, 11, 13, 14, 18, 21, 22
Control Chart 18, 19
Control Sample 11, 12, 18, 19, 23, 24*
Data Quality Objectives (DQO) 1-3, 8, 12, 19, 20, 24*, 28
Decision-maker 2, 24
Duplicate 11, 12, 14, 18-20, 23, 24*, 25, 27, 28
   Field Duplicate 11, 12, 24, 25*, 28
   Matrix Duplicate 12, 19, 20, 24, 25*, 28
   Matrix Spike Duplicate 12, 19, 20, 23, 24, 25*
Equipment Blank 11, 24*
Equipment Rinsate 11, 12, 14, 18, 24*
Estimated Quantitation Limit (EQL) 24*
Field Duplicate 12, 24, 25*, 28
Laboratory Control Sample 19, 25*
Matrix 11, 12, 18-20, 23-25*, 26-28
Matrix Duplicate 12, 19, 20, 24, 25*, 28
Matrix Spike 12, 18-20, 23, 25*, 26, 27
Matrix Spike Duplicate 12, 19, 20, 23, 24, 25*
Method Blank 19, 24, 25*, 28
Method Detection Limit (MDL) 18-20, 22, 24, 25*-27
Organic-Free Reagent Water 27*, 28
Precision 1-3, 17-20, 22, 24, 25, 27*, 28
Project 1-5, 7, 8, 11-14, 17-19, 21, 23, 24, 28*
Quality Assurance Project Plan (QAPjP) 1-9, 11, 12, 14, 15, 18, 20, 22, 23, 28*
RCRA 1, 8, 28*
Reagent Blank 28*
Reagent Grade 28*
Reagent Water 27, 28*
Reference Material 8, 11, 15, 18, 19, 28*
Split Samples 25, 28*
Standard Addition 20, 28*
Standard Curve 26, 28*
Surrogate 18, 20, 22, 29*
Trip Blank 12, 18, 24, 29*

---

* Definition of term.

CHAPTER NINE

SAMPLING PLAN

9.1 DESIGN AND DEVELOPMENT

The initial -- and perhaps most critical -- element in a program designed to evaluate the physical and chemical properties of a solid waste is the plan for sampling the waste. It is understandable that analytical studies, with their sophisticated instrumentation and high cost, are often perceived as the dominant element in a waste characterization program. Yet, despite that sophistication and high cost, analytical data generated by a scientifically defective sampling plan have limited utility, particularly in the case of regulatory proceedings.

This section of the manual addresses the development and implementation of a scientifically credible sampling plan for a solid waste and the documentation of the chain of custody for such a plan. The information presented in this section is relevant to the sampling of any solid waste, which has been defined by the EPA in its regulations for the identification and listing of hazardous wastes to include solid, semisolid, liquid, and contained gaseous materials. However, the physical and chemical diversity of those materials, as well as the dissimilarity of storage facilities (lagoons, open piles, tanks, drums, etc.) and sampling equipment associated with them, preclude a detailed consideration of any specific sampling plan. Consequently, because the burden of responsibility for developing a technically sound sampling plan rests with the waste producer, it is advisable that he/she seek competent advice before designing a plan. This is particularly true in the early developmental stages of a sampling plan, at which time at least a basic understanding of applied statistics is required. Applied statistics is the science of employing techniques that allow the uncertainty of inductive inferences (general conclusions based on partial knowledge) to be evaluated.

9.1.1 Development of Appropriate Sampling Plans

An appropriate sampling plan for a solid waste must be responsive to both regulatory and scientific objectives. Once those objectives have been clearly identified, a suitable sampling strategy, predicated upon fundamental statistical concepts, can be developed. The statistical terminology associated with those concepts is reviewed in Table 9-1; Student's "t" values for use in the statistics of Table 9-1 appear in Table 9-2.

9.1.1.1 Regulatory and Scientific Objectives

The EPA, in its hazardous waste management system, has required that certain solid wastes be analyzed for physical and chemical properties. It is mostly chemical properties that are of concern, and, in the case of a number of chemical contaminants, the EPA has promulgated levels (regulatory thresholds) that cannot be equaled or exceeded. The regulations pertaining to the management of hazardous wastes contain three references regarding the

TABLE 9-1. BASIC STATISTICAL TERMINOLOGY APPLICABLE TO SAMPLING PLANS FOR SOLID WASTES

Terminology	Symbol	Mathematical equation	(Equation)
• Variable (e.g., barium or endrin)	x	—	
• Individual measurement of variable	x_i	—	
• Mean of all possible measurements of variable (population mean)	μ	$\mu = \frac{\sum_{i=1}^{N} x_i}{N}$, with N = number of possible measurements	(1)
• Mean of measurements generated by sample (sample mean)	$\bar{x}$	<u>Simple random sampling and systematic random sampling</u>	
		$\bar{x} = \frac{\sum_{i=1}^{n} x_i}{n}$, with n = number of sample measurements	(2a)
		<u>Stratified random sampling</u>	
		$\bar{x} = \sum_{k=1}^{r} W_k \bar{x}_k$, with $\bar{x}_k$ = stratum mean and W_k = fraction of population represented by Stratum k (number of strata [k] range from 1 to r)	(2b)
• Variance of sample	s^2	<u>Simple random sampling and systematic random sampling</u>	
		$s^2 = \frac{\sum_{i=1}^{n} x_i^2 - (\sum_{i=1}^{n} x_i)^2/n}{n - 1}$	(3a)
		<u>Stratified random sampling</u>	
		$s^2 = \sum_{k=1}^{r} W_k s_k^2$, with s_k^2 = stratum variance and W_k = fraction of population represent by Stratum k (number of strata [k] ranges from 1 to r)	(3b)

TABLE 9-1. (Continued)

Terminology	Symbol	Mathematical equation	(Equation)
• Standard deviation of sample	s	$s = \sqrt{s^2}$	(4)
• Standard error (also standard error of mean and standard deviation of mean) of sample	$s_{\bar{x}}$	$s_{\bar{x}} = \frac{s}{\sqrt{n}}$	(5)
• Confidence interval for μ[a]	CI	$CI = \bar{X} \pm t_{.20}\, s_{\bar{X}}$, with $t_{.20}$ obtained from Table 2 for appropriate degrees of freedom	(6)
• Regulatory threshold[a]	RT	Defined by EPA (e.g., 100 ppm for barium in elutriate of EP toxicity)	(7)
• Appropriate number of samples to collect from a solid waste (financial constraints not considered)	n	$n = \frac{t^2_{.20} s^2}{\Delta^2}$, with $\Delta = RT - \bar{x}$	(8)
• Degrees of freedom	df	$df = n - 1$	(9)
• Square root transformation	---	$X_1 + 1/2$	(10)
• Arcsin transformation	---	Arcsin p; if necessary, refer to any text on basic statistics; measurements must be converted to percentages (p)	(11)

[a]The upper limit of the CI for μ is compared with the applicable regulatory threshold (RT) to determine if a solid waste contains the variable (chemical contaminant) of concern at a hazardous level. The contaminant of concern is not considered to be present in the waste at a hazardous level if the upper limit of the CI is less than the applicable RT. Otherwise, the opposite conclusion is reached.

TABLE 9-2. TABULATED VALUES OF STUDENT'S "t" FOR EVALUATING SOLID WASTES

Degrees of freedom (n-1)[a]	Tabulated "t" value[b]
1	3.078
2	1.886
3	1.638
4	1.533
5	1.476
6	1.440
7	1.415
8	1.397
9	1.393
10	1.372
11	1.363
12	1.356
13	1.350
14	1.345
15	1.341
16	1.337
17	1.333
18	1.330
19	1.328
20	1.325
21	1.323
22	1.321
23	1.319
24	1.318
25	1.316
26	1.315
27	1.314
28	1.313
29	1.311
30	1.310
40	1.303
60	1.296
120	1.289
	1.282

[a]Degrees of freedom (df) are equal to the number of samples (n) collected from a solid waste less one.

[b]Tabulated "t" values are for a two-tailed confidence interval and a probability of 0.20 (the same values are applicable to a one-tailed confidence interval and a probability of 0.10).

sampling of solid wastes for analytical properties. The first reference, which occurs throughout the regulations, requires that representative samples of waste be collected and defines representative samples as exhibiting average properties of the whole waste. The second reference, which pertains just to petitions to exclude wastes from being listed as hazardous wastes, specifies that enough samples (but in no case less than four samples) be collected over a period of time sufficient to represent the variability of the wastes. The third reference, which applies only to ground water monitoring systems, mandates that four replicates (subsamples) be taken from each ground water sample intended for chemical analysis and that the mean concentration and variance for each chemical constituent be calculated from those four subsamples and compared with background levels for ground water. Even the statistical test to be employed in that comparison is specified (Student's t-test).

The first of the above-described references addresses the issue of sampling accuracy, and the second and third references focus on sampling variability or, conversely, sampling precision (actually the third reference relates to analytical variability, which, in many statistical tests, is indistinguishable from true sampling variability). Sampling accuracy (the closeness of a sample value to its true value) and sampling precision (the closeness of repeated sample values) are also the issues of overriding importance in any scientific assessment of sampling practices. Thus, from both regulatory and scientific perspectives, the primary objectives of a sampling plan for a solid waste are twofold: namely, to collect samples that will allow measurements of the chemical properties of the waste that are both accurate and precise. If the chemical measurements are sufficiently accurate and precise, they will be considered reliable estimates of the chemical properties of the waste.

It is now apparent that a judgment must be made as to the degree of sampling accuracy and precision that is required to estimate reliably the chemical characteristics of a solid waste for the purpose of comparing those characteristics with applicable regulatory thresholds. Generally, high accuracy and high precision are required if one or more chemical contaminants of a solid waste are present at a concentration that is close to the applicable regulatory threshold. Alternatively, relatively low accuracy and low precision can be tolerated if the contaminants of concern occur at levels far below or far above their applicable thresholds. However, a word of caution is in order. Low sampling precision is often associated with considerable savings in analytical, as well as sampling, costs and is clearly recognizable even in the simplest of statistical tests. On the other hand, low sampling accuracy may not entail cost savings and is always obscured in statistical tests (i.e., it cannot be evaluated). Therefore, although it is desirable to design sampling plans for solid wastes to achieve only the minimally required precision (at least two samples of a material are required for any estimate of precision), it is prudent to design the plans to attain the greatest possible accuracy.

The roles that inaccurate and imprecise sampling can play in causing a solid waste to be inappropriately judged hazardous are illustrated in Figure 9-1. When evaluating Figure 9-1, several points are worthy of consideration. Although a sampling plan for a solid waste generates a mean concentration ($\bar{X}$) and standard deviation (s, a measure of the extent to which individual sample concentrations are dispersed around $\bar{X}$) for each chemical contaminant of concern, it is not the variation of individual sample concentrations that is of ultimate concern, but rather the variation that characterizes $\bar{X}$ itself. That measure of dispersion is termed the standard deviation of the mean (also, the standard error of the mean or standard error) and is designated as $s_{\bar{X}}$. Those two sample values, $\bar{X}$ and $s_{\bar{X}}$, are used to estimate the interval (range) within which the true mean (μ) of the chemical concentration probably occurs, under the assumption that the individual concentrations exhibit a normal (bell-shaped) distribution. For the purposes of evaluating solid wastes, the probability level (confidence interval) of 80% has been selected. That is, for each chemical contaminant of concern, a confidence interval (CI) is described within which μ occurs if the sample is representative, which is expected of about 80 out of 100 samples. The upper limit of the 80% CI is then compared with the appropriate regulatory threshold. If the upper limit is less than the threshold, the chemical contaminant is not considered to be present in the waste at a hazardous level; otherwise, the opposite conclusion is drawn. One last point merits explanation. Even if the upper limit of an estimated 80% CI is only slightly less than the regulatory threshold (the worst case of chemical contamination that would be judged acceptable), there is only a 10% (not 20%) chance that the threshold is equaled or exceeded. That is because values of a normally distributed contaminant that are outside the limits of an 80% CI are equally distributed between the left (lower) and right (upper) tails of the normal curve. Consequently, the CI employed to evaluate solid wastes is, for all practical purposes, a 90% interval.

9.1.1.2 Fundamental Statistical Concepts

The concepts of sampling accuracy and precision have already been introduced, along with some measurements of central tendency ($\bar{X}$) and dispersion (standard deviation [s] and $s_{\bar{X}}$) for concentrations of a chemical contaminant of a solid waste. The utility of $\bar{X}$ and $s_{\bar{X}}$ in estimating a confidence interval that probably contains the true mean (μ) concentration of a contaminant has also been described. However, it was noted that the validity of that estimate is predicated upon the assumption that individual concentrations of the contaminant exhibit a normal distribution.

Statistical techniques for obtaining accurate and precise samples are relatively simple and easy to implement. Sampling accuracy is usually achieved by some form of random sampling. In random sampling, every unit in the population (e.g., every location in a lagoon used to store a solid waste) has a theoretically equal chance of being sampled and measured. Consequently, statistics generated by the sample (e.g., $\bar{X}$ and, to a lesser degree, $s_{\bar{X}}$) are unbiased (accurate) estimators of true population parameters (e.g., the CI for μ). In other words, the sample is representative of the population. One of the commonest methods of selecting a random sample is to divide the

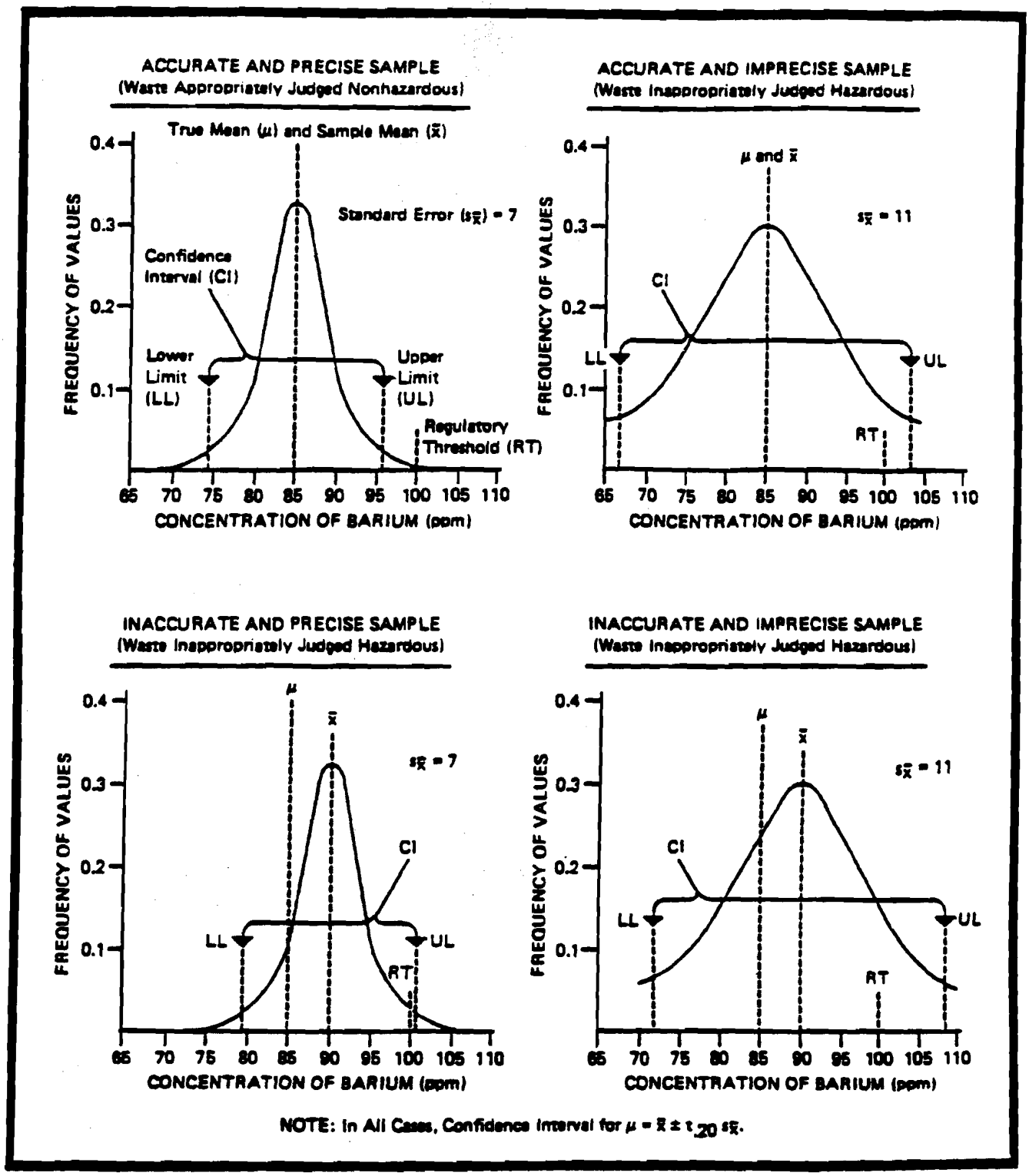

Figure 9-1.—Important theoretical relationships between sampling accuracy and precision and regulatory objectives for a chemical contaminant of a solid waste that occurs at a concentration marginally less than its regulatory threshold. In this example, barium is the chemical contaminant. The true mean concentration of barium in the elutriate of the EP toxicity test is 85 ppm, as compared to a regulatory threshold of 100 ppm. The upper limit of the confidence interval for the true mean concentration, which is estimated from the sample mean and standard error, must be less than the regulatory threshold if barium is judged to be present in the waste at a nonhazardous level.

population by an imaginary grid, assign a series of consecutive numbers to the units of the grid, and select the numbers (units) to be sampled through the use of a random-numbers table (such a table can be found in any text on basic statistics). It is important to emphasize that a haphazardly selected sample is not a suitable substitute for a randomly selected sample. That is because there is no assurance that a person performing undisciplined sampling will not consciously or subconsciously favor the selection of certain units of the population, thus causing the sample to be unrepresentative of the population.

Sampling precision is most commonly achieved by taking an appropriate number of samples from the population. As can be observed from the equation for calculating $s_{\bar{x}}$, precision increases ($s_{\bar{x}}$ and the CI for μ decrease) as the number of samples (n) increases, although not in a 1:1 ratio. For example, a 100% increase in the number of samples from two to four causes the CI to decrease by approximately 62% (about 31% of that decrease is associated with the critical upper tail of the normal curve). However, another 100% increase in sampling effort from four to eight samples results in only an additional 39% decrease in the CI. Another technique for increasing sampling precision is to maximize the physical size (weight or volume) of the samples that are collected. That has the effect of minimizing between-sample variation and, consequently, decreasing $s_{\bar{x}}$. Increasing the number or size of samples taken from a population, in addition to increasing sampling precision, has the secondary effect of increasing sampling accuracy.

In summary, reliable information concerning the chemical properties of a solid waste is needed for the purpose of comparing those properties with applicable regulatory thresholds. If chemical information is to be considered reliable, it must be accurate and sufficiently precise. Accuracy is usually achieved by incorporating some form of randomness into the selection process for the samples that generate the chemical information. Sufficient precision is most often obtained by selecting an appropriate number of samples.

There are a few ramifications of the above-described concepts that merit elaboration. If, for example, as in the case of semiconductor etching solutions, each batch of a waste is completely homogeneous with regard to the chemical properties of concern and that chemical homogeneity is constant (uniform) over time (from batch to batch), a single sample collected from the waste at an arbitrary location and time would theoretically generate an accurate and precise estimate of the chemical properties. However, most wastes are heterogeneous in terms of their chemical properties. If a batch of waste is randomly heterogeneous with regard to its chemical characteristics and that random chemical heterogeneity remains constant from batch to batch, accuracy and appropriate precision can usually be achieved by simple random sampling. In that type of sampling, all units in the population (essentially all locations or points in all batches of waste from which a sample could be collected) are identified, and a suitable number of samples is randomly selected from the population. More complex stratified random sampling is appropriate if a batch of waste is known to be nonrandomly heterogeneous in terms of its chemical properties and/or nonrandom chemical heterogeneity is known to exist from batch to batch. In such cases, the population is stratified to isolate the known sources of nonrandom chemical heterogeneity.

After stratification, which may occur over space (locations or points in a batch of waste) and/or time (each batch of waste), the units in each stratum are numerically identified, and a simple random sample is taken from each stratum. As previously intimated, both simple and stratified random sampling generate accurate estimates of the chemical properties of a solid waste. The advantage of stratified random sampling over simple random sampling is that, for a given number of samples and a given sample size, the former technique often results in a more precise estimate of chemical properties of a waste (a lower value of $s_{\bar{x}}$) than the latter technique. However, greater precision is likely to be realized only if a waste exhibits substantial nonrandom chemical heterogeneity and stratification efficiently "divides" the waste into strata that exhibit maximum between-strata variability and minimum within-strata variability. If that does not occur, stratified random sampling can produce results that are less precise than in the case of simple random sampling. Therefore, it is reasonable to select stratified random sampling over simple random sampling only if the distribution of chemical contaminants in a waste is sufficiently known to allow an intelligent identification of strata and at least two or three samples can be collected in each stratum. If a strategy employing stratified random sampling is selected, a decision must be made regarding the allocation of sampling effort among strata. When chemical variation within each stratum can be estimated with a great degree of detail, samples should be <u>optimally allocated</u> among strata, i.e., the number of samples collected from each stratum should be directly proportional to the chemical variation encountered in the stratum. When detailed information concerning chemical variability within strata is not available, samples should be <u>proportionally allocated</u> among strata, i.e., sampling effort in each stratum should be directly proportional to the size of the stratum.

Simple random sampling and stratified random sampling are types of <u>probability sampling</u>, which, because of a reliance upon mathematical and statistical theories, allows an evaluation of the effectiveness of sampling procedures. Another type of probability sampling is <u>systematic random sampling</u>, in which the first unit to be collected from a population is randomly selected, but all subsequent units are taken at fixed space or time intervals. An example of systematic random sampling is the sampling of a waste lagoon along a transect in which the first sampling point on the transect is 1 m from a randomly selected location on the shore and subsequent sampling points are located at 2-m intervals along the transect. The advantages of systematic random sampling over simple random sampling and stratified random sampling are the ease with which samples are identified and collected (the selection of the first sampling unit determines the remainder of the units) and, sometimes, an increase in precision. In certain cases, for example, systematic random sampling might be expected to be a little more precise than stratified random sampling with one unit per stratum because samples are distributed more evenly over the population. As will be demonstrated shortly, disadvantages of systematic random sampling are the poor accuracy and precision that can occur when unrecognized trends or cycles occur in the population. For those reasons, systematic random sampling is recommended only when a population is essentially random or contains at most a modest stratification. In such cases, systematic random sampling would be employed for the sake of convenience, with little expectation of an increase in precision over other random sampling techniques.

Probability sampling is contrasted with authoritative sampling, in which an individual who is well acquainted with the solid waste to be sampled selects a sample without regard to randomization. The validity of data gathered in that manner is totally dependent on the knowledge of the sampler and, although valid data can sometimes be obtained, authoritative sampling is not recommended for the chemical characterization of most wastes.

It may now be useful to offer a generalization regarding the four sampling strategies that have been identified for solid wastes. If little or no information is available concerning the distribution of chemical contaminants of a waste, simple random sampling is the most appropriate sampling strategy. As more information is accumulated for the contaminants of concern, greater consideration can be given (in order of the additional information required) to stratified random sampling, systematic random sampling, and, perhaps, authoritative sampling.

The validity of a CI for the true mean (μ) concentration of a chemical contaminant of a solid waste is, as previously noted, based on the assumption that individual concentrations of the contaminant exhibit a normal distribution. This is true regardless of the strategy that is employed to sample the waste. Although there are computational procedures for evaluating the correctness of the assumption of normality, those procedures are meaningful only if a large number of samples are collected from a waste. Because sampling plans for most solid wastes entail just a few samples, one can do little more than superficially examine resulting data for obvious departures from normality (this can be done by simple graphical methods), keeping in mind that even if individual measurements of a chemical contaminant of a waste exhibit a considerably abnormal distribution, such abnormality is not likely to be the case for sample means, which are our primary concern. One can also compare the mean of the sample ($\bar{X}$) with the variance of the sample (s^2). In a normally distributed population, $\bar{X}$ would be expected to be greater than s^2 (assuming that the number of samples [n] is reasonably large). If that is not the case, the chemical contaminant of concern may be characterized by a Poisson distribution ($\bar{X}$ is approximately equal to s^2) or a negative binomial distribution ($\bar{X}$ is less than s^2). In the former circumstance, normality can often be achieved by transforming data according to the square root transformation. In the latter circumstance, normality may be realized through use of the arcsine transformation. If either transformation is required, all subsequent statistical evaluations must be performed on the transformed scale.

Finally, it is necessary to address the appropriate number of samples to be employed in the chemical characterization of a solid waste. As has already been emphasized, the appropriate number of samples is the least number of samples required to generate a sufficiently precise estimate of the true mean (μ) concentration of a chemical contaminant of a waste. From the perspective of most waste producers, that means the minimal number of samples needed to demonstrate that the upper limit of the CI for μ is less than the applicable regulatory threshold (RT). The formula for estimating appropriate sampling effort (Table 9-1, Equation 8) indicates that increased sampling effort is generally justified as s^2 or the "$t_{.20}$" value (probable error rate) increases

and as $\Delta(RT - \bar{X})$ decreases. In a well-designed sampling plan for a solid waste, an effort is made to estimate the values of $\bar{X}$ and s^2 before sampling is initiated. Such preliminary estimates, which may be derived from information pertaining to similar wastes, process engineering data, or limited analytical studies, are used to identify the approximate number of samples that must be collected from the waste. It is always prudent to collect a somewhat greater number of samples than indicated by preliminary estimates of $\bar{X}$ and s^2 since poor preliminary estimates of those statistics can result in an underestimate of the appropriate number of samples to collect. It is usually possible to process and store the extra samples appropriately until analysis of the initially identified samples is completed and it can be determined if analysis of the additional samples is warranted.

9.1.1.3 Basic Sampling Strategies

It is now appropriate to present general procedures for implementing the three previously introduced sampling strategies (simple random sampling, stratified random sampling, and systematic random sampling) and a hypothetical example of each sampling strategy. The hypothetical examples illustrate the statistical calculations that must be performed in most situations likely to be encountered by a waste producer and, also, provide some insight into the efficiency of the three sampling strategies in meeting regulatory objectives.

The following hypothetical conditions are assumed to exist for all three sampling strategies. First, barium, which has an RT of 100 ppm as measured in the EP elutriate test, is the only chemical contaminant of concern. Second, barium is discharged in particulate form to a waste lagoon and accumulates in the lagoon in the form of a sludge, which has built up to approximately the same thickness throughout the lagoon. Third, concentrations of barium are relatively homogeneous along the vertical gradient (from the water-sludge interface to the sludge-lagoon interface), suggesting a highly controlled manufacturing process (little between-batch variation in barium concentrations). Fourth, the physical size of sludge samples collected from the lagoon is as large as practical, and barium concentrations derived from those samples are normally distributed (note that we do not refer to barium levels in the samples of sludge because barium measurements are actually made on the elutriate from EP toxicity tests performed with the samples). Last, a preliminary study of barium levels in the elutriate of four EP toxicity tests conducted with sludge collected from the lagoon several years ago identified values of 86 and 90 ppm for material collected near the outfall (in the upper third) of the lagoon and values of 98 and 104 ppm for material obtained from the far end (the lower two-thirds) of the lagoon.

For all sampling strategies, it is important to remember that barium will be determined to be present in the sludge at a hazardous level if the upper limit of the CI for μ is equal to or greater than the RT of 100 ppm (Table 9-1, Equations 6 and 7).

9.1.1.3.1 Simple Random Sampling

Simple random sampling (Box 1) is performed by general procedures in which preliminary estimates of $\bar{x}$ and s^2, as well as a knowledge of the RT, for each chemical contaminant of a solid waste that is of concern are employed to estimate the appropriate number of samples (n) to be collected from the waste. That number of samples is subsequently analyzed for each chemical contaminant of concern. The resulting analytical data are then used to conclude definitively that each contaminant is or is not present in the waste at a hazardous concentration or, alternatively, to suggest a reiterative process, involving increased sampling effort, through which the presence or absence of hazard can be definitively determined.

In the hypothetical example for simple random sampling (Box 1), preliminary estimates of $\bar{x}$ and s^2 indicated a sampling effort consisting of six samples. That number of samples was collected and initially analyzed, generating analytical data somewhat different from the preliminary data (s^2 was substantially greater than was preliminarily estimated). Consequently, the upper limit of the CI was unexpectedly greater than the applicable RT, resulting in a tentative conclusion of hazard. However, a reestimation of appropriate sampling effort, based on statistics derived from the six samples, suggested that such a conclusion might be reversed through the collection and analysis of just one more sample. Fortunately, a resampling effort was not required because of the foresight of the waste producer in obtaining three extra samples during the initial sampling effort, which, because of their influence in decreasing the final values of $\bar{x}$, $s_{\bar{x}}$, $t_{.20}$, and, consequently, the upper limit of the CI -- values obtained from all nine samples -- resulted in a definitive conclusion of nonhazard.

9.1.1.3.2 Stratified Random Sampling

Stratified random sampling (Box 2) is conducted by general procedures that are similar to the procedures described for simple random sampling. The only difference is that, in stratified random sampling, values of $\bar{x}$ and s^2 are calculated for each stratum in the population and then integrated into overall estimates of those statistics, the standard deviation (s), $s_{\bar{x}}$, and the appropriate number of samples (n) for all strata.

The hypothetical example for stratified random sampling (Box 2) is based on the same nine sludge samples previously identified in the example of simple random sampling (Box 1) so that the relative efficiencies of the two sampling strategies can be fully compared. The efficiency generated through the process of stratification is first evident in the preliminary estimate of n (Step 2 in Boxes 1 and 2), which is six for simple random sampling and four for stratified random sampling. (The lesser value for stratified sampling is the consequence of a dramatic decrease in s^2, which more than compensated for a modest increase in Δ.) The most relevant indication of sampling efficiency is the value of $s_{\bar{x}}$, which is directly employed to calculate the CI. In the case of simple random sampling, $s_{\bar{x}}$ is calculated as 2.58 (Step 9 in Box 1), and, for stratified random sampling, $s_{\bar{x}}$ is determined to be 2.35 (Steps 5 and 7 in Box 2). Consequently, the gain in efficiency attributable to stratification is approximately 9% (0.23/2.58).

BOX 1. STRATEGY FOR DETERMINING IF CHEMICAL CONTAMINANTS OF SOLID WASTES ARE PRESENT AT HAZARDOUS LEVELS - SIMPLE RANDOM SAMPLING

Step	General Procedures
1.	Obtain preliminary estimates of $\bar{x}$ and s^2 for each chemical contaminant of a solid waste that is of concern. The two above-identified statistics are calculated by, respectively, Equations 2a and 3a (Table 9-1).
2.	Estimate the appropriate number of samples (n_1) to be collected from the waste through use of Equation 8 (Table 9-1) and Table 9-2. Derive individual values of n_1 for each chemical contaminant of concern. The appropriate number of samples to be taken from the waste is the greatest of the individual n_1 values.
3.	Randomly collect at least n_1 (or $n_2 - n_1$, $n_3 - n_2$, etc., as will be indicated later in this box) samples from the waste (collection of a few extra samples will provide protection against poor preliminary estimates of $\bar{x}$ and s^2). Maximize the physical size (weight or volume) of all samples that are collected.
4.	Analyze the n_1 (or $n_2 - n_1$, $n_3 - n_2$ etc.) samples for each chemical contaminant of concern. Superficially (graphically) examine each set of analytical data for obvious departures from normality.
5.	Calculate $\bar{x}$, s^2, the standard deviation (s), and $s_{\bar{x}}$ for each set of analytical data by, respectively, Equations 2a, 3a, 4, and 5 (Table 9-1).
6.	If $\bar{x}$ for a chemical contaminant is equal to or greater than the applicable RT (Equation 7, Table 9-1) and is believed to be an accurate estimator of μ, the contaminant is considered to be present in the waste at a hazardous concentration, and the study is completed. Otherwise, continue the study. In the case of a set of analytical data that does not exhibit obvious abnormality and for which $\bar{x}$ is greater than s^2, perform the following calculations with nontransformed data. Otherwise, consider transforming the data by the square root transformation (if $\bar{x}$ is about equal to s^2) or the arcsine transformation (if $\bar{x}$ is less than s^2) and performing all subsequent calculations with transformed data. Square root and arcsine transformations are defined by, respectively, Equations 10 and 11 (Table 9-1).
7.	Determine the CI for each chemical contaminant of concern by Equation 6 (Table 9-1) and Table 9-2. If the upper limit of the CI is less than the applicable RT (Equations 6 and 7, Table 9-1), the chemical contaminant is not considered to be present in the waste at a hazardous concentration and the study is completed. Otherwise, the opposite conclusion is tentatively reached.

8. If a tentative conclusion of hazard is reached, reestimate the total number of samples (n_2) to be collected from the waste by use of Equation 8 (Table 9-1) and Table 9-2. When deriving n_2, employ the newly calculated (not preliminary) values of x and s^2. If additional $n_2 - n_1$ samples of waste cannot reasonably be collected, the study is completed, and a definitive conclusion of hazard is reached. Otherwise, collect extra $n_2 - n_1$ samples of waste.

9. Repeat the basic operations described in Steps 3 through 8 until the waste is judged to be nonhazardous or, if the opposite conclusion continues to be reached, until increased sampling effort is impractical.

Hypothetical Example

Step

1. The preliminary study of barium levels in the elutriate of four EP toxicity tests, conducted with sludge collected from the lagoon several years ago, generated values of 86 and 90 ppm for sludge obtained from the upper third of the lagoon and values of 98 and 104 ppm for sludge from the lower two-thirds of the lagoon. Those two sets of values are not judged to be indicative of nonrandom chemical heterogeneity (stratification) within the lagoon. Therefore, preliminary estimates of $\bar{x}$ and s^2 are calculated as:

$$\bar{x} = \frac{\sum_{i=1}^{n} X_i}{n} = \frac{86 + 90 + 98 + 104}{4} = 94.50, \text{ and} \qquad \text{(Equation 2a)}$$

$$s^2 = \frac{\sum_{i=1}^{n} X_i^2 - (\sum_{i=1}^{n} X_i)^2/n}{n - 1} \qquad \text{(Equation 3a)}$$

$$= \frac{35{,}916.00 - 35{,}721.00}{3} = 65.00.$$

2. Based on the preliminary estimates of $\bar{x}$ and s^2, as well as the knowledge that the RT for barium is 100 ppm,

$$n_1 = \frac{t^2_{.20} s^2}{\Delta^2} = \frac{(1.638^2)(65.00)}{5.50^2} = 5.77. \qquad \text{(Equation 8)}$$

3. As indicated above, the appropriate number of sludge samples (n_1) to be collected from the lagoon is six. That number of samples (plus three extra samples for protection against poor preliminary estimates of $\bar{x}$ and s^2) is collected from the lagoon by a single randomization process (Figure 9-2). All samples consist of the greatest volume of sludge that

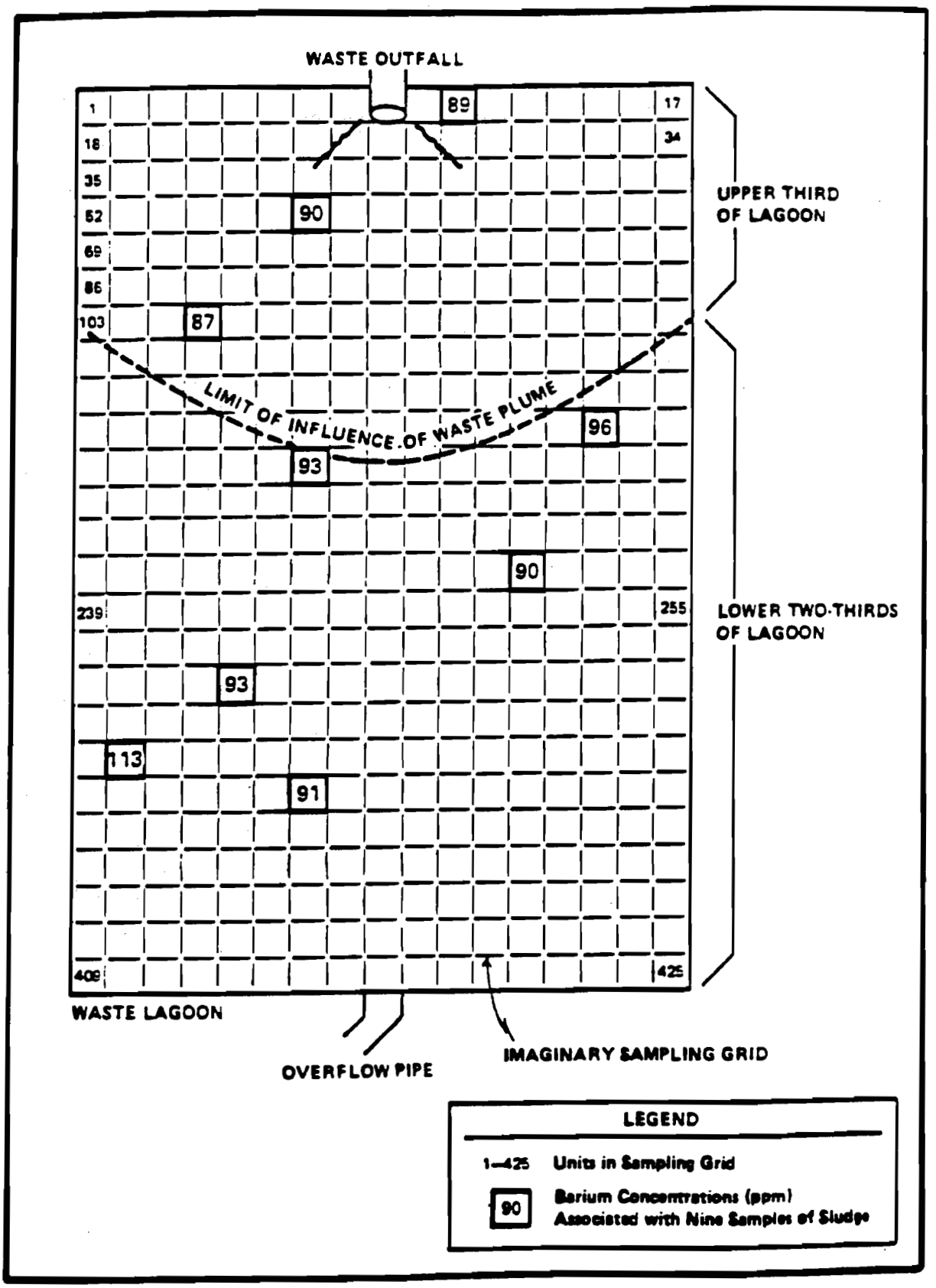

Figure 9-2.—Hypothetical sampling conditions in waste lagoon containing sludge contaminated with barium. Barium concentrations associated with samples of sludge refer to levels measured in the elutriate of EP toxicity tests conducted with the samples.

can be practically collected. The three extra samples are suitably processed and stored for possible later analysis.

4. The six samples of sludge (n_1) designated for immediate analysis generate the following concentrations of barium in the EP toxicity test: 89, 90, 87, 96, 93, and 113 ppm. Although the value of 113 ppm appears unusual as compared with the other data, there is no obvious indication that the data are not normally distributed.

5. New values for $\bar{x}$ and s^2 and associated values for the standard deviation (s) and $s_{\bar{x}}$ are calculated as:

$$\bar{x} = \frac{\sum_{i=1}^{n} X_i}{n} = \frac{89 + 90 + 87 + 96 + 93 + 113}{6} = 94.67, \qquad \text{(Equation 2a)}$$

$$s^2 = \frac{\sum_{i=1}^{n} X_i^2 - (\sum_{i=1}^{n} X_i)^2/n}{n - 1} \qquad \text{(Equation 3a)}$$

$$= \frac{54{,}224.00 - 53{,}770.67}{5} = 90.67,$$

$$s = \sqrt{s^2} = 9.52, \text{ and} \qquad \text{(Equation 4)}$$

$$s_{\bar{x}} = s/\sqrt{n} = 9.52/\sqrt{6} = 3.89. \qquad \text{(Equation 5)}$$

6. The new value for $\bar{x}$ (94.67) is less than the RT (100). In addition, $\bar{x}$ is greater (only slightly) than s^2 (90.67), and, as previously indicated, the raw data are not characterized by obvious abnormality. Consequently, the study is continued, with the following calculations performed with nontransformed data.

7. $$CI = \bar{x} \pm t_{.20} s_{\bar{x}} = 94.67 \pm (1.476)(3.89) \qquad \text{(Equation 6)}$$

$$= 94.67 \pm 5.74.$$

Because the upper limit of the CI (100.41) is greater than the applicable RT (100), it is tentatively concluded that barium is present in the sludge at a hazardous concentration.

8. n is now reestimated as:

$$n_2 = \frac{t^2_{.20} s^2}{\Delta^2} \frac{(1.476^2)(90.67)}{5.33^2} = 6.95. \qquad \text{(Equation 8)}$$

The value for n_2 (approximately 7) indicates that an additional ($n_2 - n_1 = 1$) sludge sample should be collected from the lagoon.

9. The additional sampling effort is not necessary because of the three extra samples that were initially collected from the lagoon. All extra samples are analyzed, generating the following levels of barium for the EP toxicity test: 93, 90, and 91 ppm. Consequently, $\bar{x}$, s^2, the standard deviation (s), and $s_{\bar{x}}$ are recalculated as:

$$\bar{x} = \frac{\sum_{i=1}^{n} X_i}{n} = \frac{86 + 90 + \ldots + 91}{9} = 93.56\ , \qquad \text{(Equation 2a)}$$

$$s^2 = \frac{\sum_{i=1}^{n} X_i^2 - (\sum_{i=1}^{n} X_i)^2/n}{n - 1} \qquad \text{(Equation 3a)}$$

$$= \frac{79{,}254.00 - 78{,}773.78}{8} = 60.03,$$

$$s = \sqrt{s^2} = 7.75, \text{ and} \qquad \text{(Equation 4)}$$

$$s_{\bar{x}} = s/\sqrt{n} = 7.75/\sqrt{9} = 2.58. \qquad \text{(Equation 5)}$$

The value for $\bar{x}$ (93.56) is again less than the RT (100), and there is no indication that the nine data points, considered collectively, are abnormally distributed (in particular, $\bar{x}$ is now substantially greater than s^2). Consequently, CI, calculated with nontransformed data, is determined to be:

$$CI = \bar{x} \pm t_{.20} s_{\bar{x}} = 93.56 \pm (1.397)(2.58) \qquad \text{(Equation 6)}$$

$$= 93.56 \pm 3.60.$$

The upper limit of the CI (97.16) is now less than the RT of 100. Consequently, it is definitively concluded that barium is not present in the sludge at a hazardous level.

BOX 2. STRATEGY FOR DETERMINING IF CHEMICAL CONTAMINANTS OF SOLID WASTES ARE PRESENT AT HAZARDOUS LEVELS - STRATIFIED RANDOM SAMPLING

Step	General Procedures
1.	Obtain preliminary estimates of $\bar{X}$ and s^2 for each chemical contaminant of a solid waste that is of concern. The two above-identified statistics are calculated by, respectively, Equations 2b and 3b (Table 9-1).
2.	Estimate the appropriate number of samples (n_1) to be collected from the waste through use of Equation 8 (Table 9-1) and Table 9-2. Derive individual values of n_1 for each chemical contaminant of concern. The appropriate number of samples to be taken from the waste is the greatest of the individual n_1 values.
3.	Randomly collect at least n_1 (or $n_2 - n_1$, $n_3 - n_2$, etc., as will be indicated later in this box) samples from the waste (collection of a few extra samples will provide protection against poor preliminary estimates of $\bar{X}$ and s^2). If s_k for each stratum (see Equation 3b) is believed to be an accurate estimate, optimally allocate samples among strata (i.e., allocate samples among strata so that the number of samples collected from each stratum is directly proportional to s_k for that stratum). Otherwise, proportionally allocate samples among strata according to size of the strata. Maximize the physical size (weight or volume) of all samples that are collected from the strata.
4.	Analyze the n_1 (or $n_2 - n_1$, $n_3 - n_2$ etc.) samples for each chemical contaminant of concern. Superficially (graphically) examine each set of analytical data from each stratum for obvious departures from normality.
5.	Calculate $\bar{X}$, s_2, the standard deviation (s), and $s_{\bar{X}}$ for each set of analytical data by, respectively, Equations 2b, 3b, 4, and 5 (Table 9-1).
6.	If $\bar{X}$ for a chemical contaminant is equal to or greater than the applicable RT (Equation 7, Table 9-1) and is believed to be an accurate estimator of u, the contaminant is considered to be present in the waste at a hazardous concentration, and the study is completed. Otherwise, continue the study. In the case of a set of analytical data that does not exhibit obvious abnormality and for which $\bar{X}$ is greater than s^2, perform the following calculations with nontransformed data. Otherwise, consider transforming the data by the square root transformation (if $\bar{X}$ is about equal to s^2) or the arcsine transformation (if $\bar{X}$ is less than s^2) and performing all subsequent calculations with transformed data. Square root and arcsine transformations are defined by, respectively, Equations 10 and 11 (Table 9-1).
7.	Determine the CI for each chemical contaminant of concern by Equation 6 (Table 9-1) and Table 9-2. If the upper limit of the CI is less than the applicable RT (Equations 6 and 7, Table 9-1), the chemical contaminant is not considered to be present in the waste at a hazardous concentration, and the study is completed. Otherwise, the opposite conclusion is tentatively reached.

8. If a tentative conclusion of hazard is reached, reestimate the total number of samples (n_2) to be collected from the waste by use of Equation 8 (Table 9-1) and Table 9-2. When deriving n_2, employ the newly calculated (not preliminary) values of $\bar{x}$ and s^2. If additional $n_2 - n_1$ samples of waste cannot reasonably be collected, the study is completed, and a definitive conclusion of hazard is reached. Otherwise, collect extra $n_2 - n_1$ samples of waste.

9. Repeat the basic operations described in steps 3 through 8 until the waste is judged to be nonhazardous or, if the opposite conclusion continues to be reached, until increased sampling effort is impractical.

Hypothetical Example

Step

1. The preliminary study of barium levels in the elutriate of four EP toxicity tests, conducted with sludge collected from the lagoon several years ago, generated values of 86 and 90 ppm for sludge obtained from the upper third of the lagoon and values of 98 and 104 ppm for sludge from the lower two-thirds of the lagoon. Those two sets of values are not judged to be indicative of nonrandom chemical heterogeneity (stratification) within the lagoon. Therefore, preliminary estimates of $\bar{x}$ and s^2 are calculated as:

$$\bar{x} = \sum_{k=1}^{r} W_k \bar{x}_k = \frac{(1)(88.00)}{3} + \frac{(2)(101.00)}{3} = 96.67, \text{ and} \qquad \text{(Equation 2b)}$$

$$s^2 = \sum_{k=1}^{r} W_k s_k^2 = \frac{(1)(8.00)}{3} + \frac{(2)(18.00)}{3} = 14.67. \qquad \text{(Equation 3b)}$$

2. Based on the preliminary estimates of $\bar{x}$ and s^2, as well as the knowledge that the RT for barium is 100 ppm,

$$n_1 = \frac{t_{.20}^2 s^2}{\Delta^2} = \frac{(1.368^2)(14.67)}{3.33^2} = 3.55. \qquad \text{(Equation 8)}$$

3. As indicated above, the appropriate number of sludge samples (n_1) to be collected from the lagoon is four. However, for purposes of comparison with simple random sampling (Box 1), six samples (plus three extra samples for protection against poor preliminary estimates of $\bar{x}$ and s^2) are collected from the lagoon by a two-stage randomization process (Figure 2). Because s_k for the upper (2.12 ppm) and lower (5.66 ppm) strata are not believed to be very accurate estimates, the nine samples to be collected from the lagoon are not optimally allocated between the two strata (optimum allocation would require two and seven samples to be

collected from the upper and lower strata, respectively). Alternatively, proportional allocation is employed: three samples are collected from the upper stratum (which represents one-third of the lagoon), and six samples are taken from the lower stratum (two-thirds of the lagoon). All samples consist of the greatest volume of sludge that can be practically collected.

4. The nine samples of sludge generate the following concentrations of barium in the EP toxicity test: upper stratum -- 89, 90, and 87 ppm; lower stratum -- 96, 93, 113, 93, 90, and 91 ppm. Although the value of 113 ppm appears unusual as compared with the other data for the lower stratum, there is no obvious indication that the data are not normally distributed.

5. New values for $\bar{x}$ and s^2 and associated values for the standard deviation (s) and $s_{\bar{x}}$ are calculated as:

$$\bar{x} = \sum_{k=1}^{r} W_k \bar{x}_k = \frac{(1)(88.67)}{3} + \frac{(2)(96.00)}{3} = 93.56, \qquad \text{(Equation 2b)}$$

$$s^2 = \sum_{k=1}^{r} W_k s_k^2 = \frac{(1)(2.33)}{3} + \frac{(2)(73.60)}{3} = 49.84, \qquad \text{(Equation 3b)}$$

$$s = \sqrt{s^2} = 7.06, \text{ and} \qquad \text{(Equation 4)}$$

$$s_{\bar{x}} = s/\sqrt{n} = 7.06/\sqrt{9} = 2.35. \qquad \text{(Equation 5)}$$

6. The new value for $\bar{x}$ (93.56) is less than the RT (100). In addition, $\bar{x}$ is greater than s^2 (49.84), and, as previously indicated, the raw data are not characterized by obvious abnormality. Consequently, the study is continued, with the following calculations performed with nontransformed data.

7. $$CI = \bar{x} \pm t_{.20} s_{\bar{x}} = 93.56 \pm (1.397)(2.35) \qquad \text{(Equation 6)}$$

$$= 93.56 \pm 3.28$$

The upper limit of the CI (96.84) is less than the applicable RT (100). Therefore, it is concluded that barium is not present in the sludge at a hazardous concentration.

9.1.1.3.3 Systematic Random Sampling

Systematic random sampling (Box 3) is implemented by general procedures that are identical to the procedures identified for simple random sampling. The hypothetical example for systematic random sampling (Box 3) demonstrates the bias and imprecision that are associated with that type of sampling when unrecognized trends or cycles exist in the population.

9.1.1.4 Special Considerations

The preceding discussion has addressed the major issues that are critical to the development of a reliable sampling strategy for a solid waste. The remaining discussion focuses on several "secondary" issues that should be considered when designing an appropriate sampling strategy. These secondary issues are applicable to all three of the basic sampling strategies that have been identified.

9.1.1.4.1 Composite Sampling

In composite sampling, a number of random samples are initially collected from a waste and combined into a single sample, which is then analyzed for the chemical contaminants of concern. The major disadvantage of composite sampling, as compared with noncomposite sampling, is that information concerning the chemical contaminants is lost, i.e., each initial set of samples generates only a single estimate of the concentration of each contaminant. Consequently, because the number of analytical measurements (n) is small, $s_{\bar{x}}$ and $t_{.20}$ are large, thus decreasing the likelihood that a contaminant will be judged to occur in the waste at a nonhazardous level (refer to appropriate equations in Table 9-1 and to Table 9-2). A remedy to that situation is to collect and analyze a relatively large number of composite samples, thereby offsetting the savings in analytical costs that are often associated with composite sampling, but achieving better representation of the waste than would occur with noncomposite sampling.

The appropriate number of composite samples to be collected from a solid waste is estimated by use of Equation 8 (Table 9-1), as previously described for the three basic sampling strategies. In comparison with noncomposite sampling, composite sampling may have the effect of minimizing between-sample variation (the same phenomenon that occurs when the physical size of a sample is maximized), thereby reducing somewhat the number of samples that must be collected from the waste.

9.1.1.4.2 Subsampling

The variance (s^2) associated with a chemical contaminant of a waste consists of two components in that:

$$s^2 = s_s^2 + \frac{s_a^2}{m}, \qquad \text{(Equation 12)}$$

BOX 3. STRATEGY FOR DETERMINING IF CHEMICAL CONTAMINANTS OF SOLID WASTES ARE PRESENT AT HAZARDOUS LEVELS - SYSTEMATIC RANDOM SAMPLING

Step	General Procedures
1.	Follow general procedures presented for simple random sampling of solid wastes (Box 1).

Step	Hypothetical Example
1.	The example presented in Box 1 is applicable to systematic random sampling, with the understanding that the nine sludge samples obtained from the lagoon would be collected at equal intervals along a transect running from a randomly selected location on one bank of the lagoon to the opposite bank. If that randomly selected transect were established between Units 1 and 409 of the sampling grid (Figure 9-2) and sampling were performed at Unit 1 and thereafter at three-unit intervals along the transect (i.e., Unit 1, Unit 52, Unit 103, ... , and Unit 409), it is apparent that only two samples would be collected in the upper third of the lagoon, whereas seven samples would be obtained from the lower two-thirds of the lagoon. If, as suggested by the barium concentrations illustrated in Figure 9-2, the lower part of the lagoon is characterized by greater and more variable barium contamination than the upper part of the lagoon, systematic random sampling along the above-identified transect, by placing undue (disproportionate) emphasis on the lower part of the lagoon, might be expected to result in an inaccurate (overestimated) and imprecise characterization of barium levels in the whole lagoon, as compared with either simple random sampling or stratified random sampling. Such inaccuracy and imprecision, which are typical of systematic random sampling when unrecognized trends or cycles occur in the population, would be magnified if, for example, the randomly selected transect were established solely in the lower part of the lagoon, e.g., between Units 239 and 255 of the sampling grid.

where s_s^2 = a component attributable to sampling (sample) variation, s_a^2 = a component attributable to analytical (subsample) variation, and m = number of subsamples. In general, s_a^2 should not be allowed to exceed one-ninth of s_s^2. If a preliminary study indicates that s_a^2 exceeds that threshold, a sampling strategy involving subsampling should be considered. In such a strategy, a number of replicate measurements are randomly made on a relatively limited number of randomly collected samples. Consequently, analytical effort is allocated as a function of analytical variability. The efficiency of that general strategy in meeting regulatory objectives has already been demonstrated in the previous discussions of sampling effort.

The appropriate number of samples (n) to be collected from a solid waste for which subsampling will be employed is again estimated by Equation 8 (Table 9-1). In the case of simple random sampling or systematic random sampling with an equal number of subsamples analyzed per sample:

$$\bar{x} = \sum_{i=1}^{n} x_i/n, \qquad \text{(Equation 13)}$$

where $\bar{x}_i$ = sample mean (calculated from values for subsamples) and n = number of samples. Also,

$$s^2 = \frac{\sum_{i=1}^{n} \bar{x}_i^2 - (\sum_{i=1}^{n} \bar{x}_i)^2/n}{n - 1} \qquad \text{(Equation 14)}$$

The optimum number of subsamples to be taken from each sample ($m_{opt.}$) is estimated as:

$$m_{(opt.)} = \frac{s_a}{s_s} \qquad \text{(Equation 15)}$$

when cost factors are not considered. The value for s_a is calculated from available data as:

$$s_a = \sqrt{\frac{\sum_{i=1}^{n} \sum_{j=1}^{m} x_{ij}^2 - (\Sigma x_{ij})^2/m}{n\,(m - 1)}}, \qquad \text{(Equation 16)}$$

and s_s, which can have a negative characteristic, is defined as:

$$s_s = \sqrt{s^2 - \frac{s_a^2}{m}}, \qquad \text{(Equation 17)}$$

with s_2 calculated as indicated in Equation 14.

In the case of stratified random sampling with subsampling, critical formulas for estimating sample size (n) by Equation 8 (Table 9-1) include:

$$\bar{x} = \sum_{k=1}^{r} W_k \bar{x}_k, \qquad \text{(Equation 2b)}$$

where $\bar{x}_k$ = stratum mean and W_k = fraction of population represented by Stratum K (number of strata, k, ranges from 1 to r). In Equation 2b, $\bar{x}_k$ for each stratum is calculated as the average of all sample means in the stratum (sample means are calculated from values for subsamples). In addition, s^2 is calculated by:

$$s^2 = \sum_{k=1}^{r} W_k s_k^2, \qquad \text{(Equation 3b)}$$

with s^2_k for each stratum calculated from all sample means in the stratum. The optimum subsampling effort when cost factors are not considered and all replication is symmetrical is again estimated as:

$$m_{(opt.)} = \frac{s_a}{s_s}, \text{ with} \qquad \text{(Equation 15)}$$

$$s_a = \sqrt{\frac{\sum_{k=1}^{r} \sum_{i=1}^{n} \sum_{j=1}^{m} X_{kij}^2 - (\Sigma X_{kij})^2/m}{rn\,(m-1)}}, \text{ and} \qquad \text{(Equation 18)}$$

$$s_s = \sqrt{s^2 - \frac{s_a^2}{m}}, \qquad \text{(Equation 17)}$$

with s^2 derived as shown in Equation 3b.

9.1.1.5 Cost and Loss Functions

The cost of chemically characterizing a waste is dependent on the specific strategy that is employed to sample the waste. For example, in the case of simple random sampling without subsampling, a reasonable cost function might be:

$$C_{(n)} = C_0 + C_1 n, \qquad \text{(Equation 19)}$$

where $C_{(n)}$ = cost of employing a sample size of n, C_0 = an overhead cost (which is independent of the number of samples that are collected and analyzed), and C_1 = a sample-dependent cost. A consideration of $C_{(n)}$ mandates an evaluation of $L_{(n)}$, which is the sample-size-dependent expected financial loss related to the erroneous conclusion that a waste is hazardous. A simple loss function is:

$$L_{(n)} = \frac{\alpha s^2}{n} , \qquad \text{(Equation 20)}$$

with α = a constant related to the cost of a waste management program if the waste is judged to be hazardous, s^2 = sample variance, and n = number of samples. A primary objective of any sampling strategy is to minimize $C_{(n)} + L_{(n)}$. Differentiation of Equations 19 and 20 indicates that the number of samples (n) that minimize $C_{(n)} + L_{(n)}$ is:

$$n = \sqrt{\frac{\alpha s^2}{C_1}} . \qquad \text{(Equation 21)}$$

As is evident from Equation 21, a comparatively large number of samples (n) is justified if the value of α or s^2 is large, whereas a relatively small number of samples is appropriate if the value of C_1 is large. These general conclusions are valid for any sampling strategy for a solid waste.

9.2 IMPLEMENTATION

This section discusses the implementation of a sampling plan for the collection of a "solid waste," as defined by Section 261.2 of the Resource Conservation and Recovery Act (RCRA) regulations. Due to the uniqueness of each sampling effort, the following discussion is in the general form of guidance which, when applied to each sampling effort, should improve and document the quality of the sampling and the representativeness of samples.

The following subsections address elements of a sampling effort in a logical order, from defining objectives through compositing samples prior to analysis.

9.2.1 Definition Of Objectives

After verifying the need for sampling, those personnel directing the sampling effort should define the program's objectives. The need for a sampling effort should not be confused with the objective. When management, a regulation, or a regulatory agency requires sampling, the need for sampling is established but the objectives must be defined.

The primary objective of any waste sampling effort is to obtain information that can be used to evaluate a waste. It is essential that the specific information needed and its uses are defined in detail at this stage. The information needed is usually more complex than just a concentration of a specified parameter; it may be further qualified (e.g., by sampling location or sampling time.) The manner in which the information is to be used can also have a substantial impact on the design of a sampling plan. (Are the data to be used in a qualitative or quantitative manner? If quantitative, what are the accuracy and precision requirements?)

All pertinent information should be gathered. For example, if the primary objective has been roughly defined as "collecting samples of waste which will be analyzed to comply with environmental regulations," then ask the following questions:

1. The sampling is being done to comply with which evironmental regulation? Certain regulations detail specific or minimum protocols (e.g., exclusion petitions as defined in §260.22 of the RCRA regulations); the sampling effort must comply with these regulatory requirements.

2. The collected samples are to be analyzed for which parameters? Why those and not others? Should the samples be analyzed for more or fewer parameters?

3. What waste is to be sampled: the waste as generated? the waste prior to or after mixing with other wastes or stabilizing agents? the waste after aging or drying or just prior to disposal? Should waste disposed of 10 years ago be sampled to acquire historical data?

4. What is the end-use of the generated data base? What are the required degrees of accuracy and precision?

By asking such questions, both the <u>primary</u> objective and <u>specific</u> sampling, analytical, and data objectives can be established.

Two sampling efforts could have identical primary objectives but different specific objectives. For example, consider two situations in which the primary objective is to determine if the concentration of barium is less than the regulatory threshold of 100 ppm. The specific objectives will vary and have a substantial effect on sampling. (This situation is presented graphically in Figures 9-3 and 9-4.) In Figure 9-3, under the assumption that the true distribution of barium concentrations throughout the waste of interest is as shown, limited information has indicated that the average concentration is approximately 50 ppm. In Figure 9-4, assume that historical data indicated an average concentration of 90 ppm and the true distribution of barium concentrations is as shown. Therefore, the specific data objective for the latter case is to generate a data base that can discriminate between 90 and 100 ppm, whereas in the former case the data objective is to discriminate between 50 and 100 ppm. Greater accuracy and precision are required to discriminate between 90 and 100 ppm; this fact will affect the number, size, and degree of compositing of samples collected and analyzed.

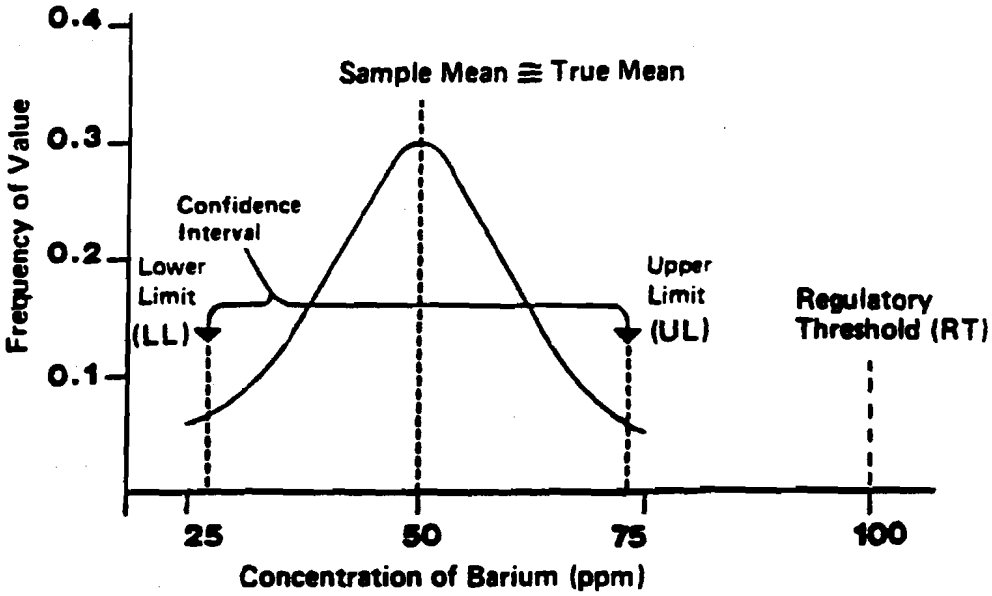

Distance of true value from regulatory threshold requires less accuracy and precision.

Figure 9-3. Distribution of barium concentration removed from a regulatory threshold.

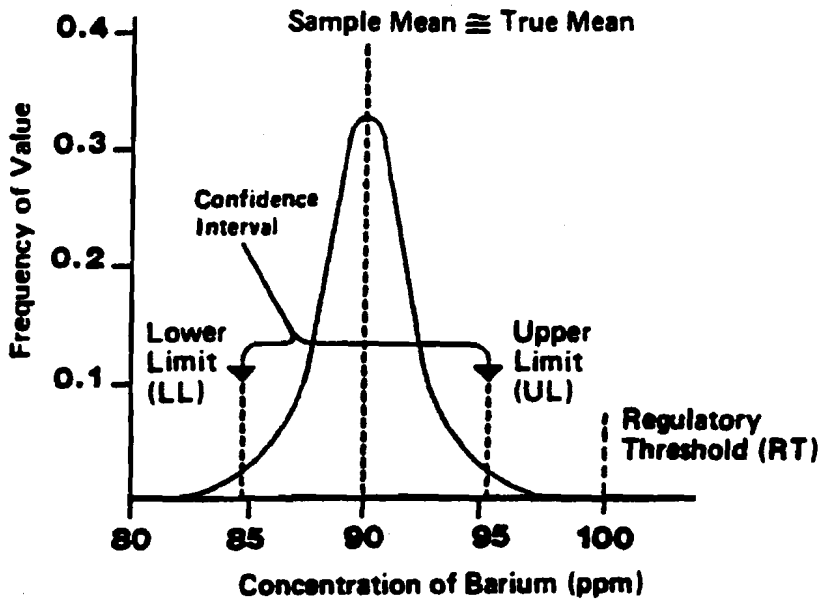

Proximity of true value from regulatory threshold requires more accuracy and precision.

Figure 9-4. Distribution of barium concentration near a regulatory threshold.

The form in Figure 9-5 can be used to document primary and specific objectives prior to development of a sampling plan. Once the objectives of a sampling effort are developed, it is important to adhere to them to ensure that the program maintains its direction.

9.2.2 Sampling Plan Considerations

The sampling plan is usually a written document that describes the objectives and details the individual tasks of a sampling effort and how they will be performed. (Under unusual circumstances, time may not allow for the sampling plan to be documented in writing, e.g., sampling during an emergency spill. When operating under these conditions, it is essential that the person directing the sampling effort be aware of the various elements of a sampling plan.) The more detailed the sampling plan, the less the opportunity for oversight or misunderstanding during sampling, analysis, and data treatment.

To ensure that the sampling plan is designed properly, it is wise to have all aspects of the effort represented. Those designing the sampling plan should include the following personnel:

1. An end-user of the data, who will be using the data to attain program objectives and thus would be best prepared to ensure that the data objectives are understood and incorporated into the sampling plan.

2. An experienced member of the field team who will actually collect samples, who can offer hands-on insight into potential problems and solutions, and who, having acquired a comprehensive understanding of the entire sampling effort during the design phase, will be better prepared to implement the sampling plan.

3. An analytical chemist, because the analytical requirements for sampling, preservation, and holding times will be factors around which the sampling plan will be written. A sampling effort cannot succeed if an improperly collected or preserved sample or an inadequate volume of sample is submitted to the laboratory for chemical, physical, or biological testing. The appropriate analytical chemist should be consulted on these matters.

4. An engineer should be involved if a complex manufacturing process is being sampled. Representation of the appropriate engineering discipline will allow for the optimization of sampling locations and safety during sampling and should ensure that all waste-stream variations are accounted for.

5. A statistician, who will review the sampling approach and verify that the resulting data will be suitable for any required statistical calculations or decisions.

6. A quality assurance representative, who will review the applicability of standard operating procedures and determine the number of blanks, duplicates, spike samples, and other steps required to document the accuracy and precision of the resulting data base.

Sampling Site: _____

_____

_____

Address: _____

_____

_____

Description of Waste to be Sampled: _____

_____

_____

Primary Objective: _____

_____

_____

Specific Sampling Objectives: _____

_____

_____

Specific Analysis Objectives: _____

_____

_____

Specific Data Objectives: _____

_____

_____

Figure 9-5. Form for Documenting Primary and Specific Objectives

At least one person should be familiar with the site to be sampled. If not, then a presampling site visit should be arranged to acquire site-specific information. If no one is familiar with the site and a presampling site visit cannot be arranged, then the sampling plan must be written so that it can address contingencies that may occur.

Even in those cases in which a detailed sampling plan is authored and a comprehensive knowledge of the site exists, it is unusual for a sampling plan to be implemented exactly as written. Waste-stream changes, inappropriate weather, sampling equipment failure, and problems in gaining access to the waste are some reasons why a sampling plan must be altered. Thus it is always necessary to have at least one experienced sampler as a member of a sampling team.

The sampling plan should address the considerations discussed below.

9.2.2.1 Statistics

A discussion of waste sampling often leads to a discussion of statistics. The goals of waste sampling and statistics are identical, i.e., to make inferences about a parent population based upon the information contained in a sample.

Thus it is not surprising that waste sampling relies heavily upon the highly developed science of statistics and that a sampling/analytical effort usually contains the same elements as does a statistical experiment. Analogously, the Harris pollster collects opinions from randomly chosen people, whereas environmental scientists collect waste at randomly chosen locations or times. The pollster analyzes the information into a useable data base; laboratories analyze waste samples and generate data. Then the unbiased data base is used to draw inferences about the entire population, which for the Harris pollster may be the voting population of a large city, whereas for the environmental scientist the population may mean the entire contents of a landfill.

During the implementation of a waste sampling plan or a statistical experiment, an effort is made to minimize the possibility of drawing incorrect inferences by obtaining samples that are representative of a population. In fact, the term "representative sample" is commonly used to denote a sample that (1) has the properties and chemical composition of the population from which it was collected, and (2) has them in the same average proportions as are found in the population.

In regard to waste sampling, the term "representative sample" can be misleading unless one is dealing with a homogeneous waste from which one sample can represent the whole population. In most cases, it would be best to consider a "representative data base" generated by the collection and analysis of more than one sample that defines the average properties or composition of the waste. A "representative data base" is a more realistic term because the evaluation of most wastes requires numerous samples to determine the average properties or concentrations of parameters in a waste. (The additional samples needed to generate a representative data base can also be used to determine the variability of these properties or concentrations throughout the waste population.)

Statisticians have developed a number of strategies to obtain samples that are unbiased and collectively representative of a population. A detailed discussion of these strategies is presented in Section 9.1 of this chapter. The following discussion of statistical considerations is a less technical summary of these strategies. It was written to complement Section 9.1 and will be most useful after Section 9.1 is read and studied.

Section 9.1 describes three basic sampling strategies: simple random, stratified random, and systematic random sampling. It should be noted that the word random has more than one meaning. When used in statistical discussions, it does not mean haphazard; it means that every part of a waste has a theoretically equal chance of being sampled. Random sampling, which entails detailed planning and painstaking implementation, is distinctly different from haphazard sampling, which may introduce bias into the collection of samples and the resulting data.

Systematic random sampling and authoritative sampling strategies require a substantial knowledge of the waste to ensure that: (1) a cycle or trend in waste composition does not coincide with the sampling locations; or (2) in the case of authoritative sampling, all or most of the assumptions regarding waste composition or generation are true. Because the variabilities of waste composition and the waste generation process are often unknown, systematic random and authoritative sampling strategies are usually not applicable to waste evaluation.

Therefore, for waste sampling, the usual options are simple or stratified random sampling. Of these two strategies, simple random sampling is the option of choice unless: (1) there are known distinct strata (divisions) in the waste over time or in space; (2) one wants to prove or disprove that there are distinct time and/or space strata in the waste of interest; or (3) one is collecting a minimum number of samples and desires to minimize the size of a hot spot (area of high concentration) that could go unsampled. If any of these three conditions exists, it may be determined that stratified random sampling would be the optimum strategy. To explain how these strategies can be employed, a few examples follow:

Example 1: Simple Random Sampling of Tanks

A batch manufacturing process had been generating a liquid waste over a period of years and storing it in a large open-top tank. As this tank approached capacity, some of the waste was allowed to overflow to a smaller enclosed tank. This smaller tank allowed for limited access through an inspection port on its top.

Because the on-site tank storage was approaching capacity, it was determined that the waste would have to be disposed of off-site.

The operators of the facility had determined that the waste was a nonhazardous solid waste when the RCRA regulations were first promulgated. However, upon recent passage of more stringent state regulations and concerns of potential liability, the operators determined that they should perform a more comprehensive analysis of the waste.

Because the waste was generated in a batch mode over a period of years, the operators were concerned that the waste composition might have varied between batches and that stratification might have occurred in the tank at unknown and random depths. Based on their knowledge, the operators knew that a grab sample would not suffice and that a sampling program would have to be designed to address the heterogeneity of the waste.

Because the operators intended to dispose of the entire contents of the tank and lacked any specific information regarding stratification and variability of the waste, it was decided that a simple random strategy would be employed. (If the operators had treated portions of the waste differently or had been aware of distinct strata, then stratified random sampling might have been more appropriate.)

The large, unenclosed tank had a diameter of 50 ft, a height of 20 ft, and an approximate volume of 295,000 gal allowed. It was encircled and traversed by catwalks (refer to Figure 9-6), which allowed access to the entire waste surface. The smaller tank had a diameter of 10 ft, a height of 10 ft, and an approximate volume of 6,000 gal; an inspection port located on the top allowed limited access. It was determined that the different construction of the two tanks would require different simple random sampling approaches.

In the case of the large tank, it was decided that vertical composite samples would be collected because the operators were interested in the average composition and variability of the waste and not in determining if different vertical strata existed. It was decided to select points randomly along the circumference (157 ft) and along the radius (25 ft). These numbers, which would constitute the coordinates of the sampling locations, were chosen from a random-number table by indiscriminately choosing a page and then a column on that page. The circumference coordinates were then chosen by proceeding down the column and listing the first 15 numbers that are greater than or equal to 0, but less than or equal to 157. The radius coordinates were chosen by continuing down the column and listing the first 15 numbers that are greater than or equal to 0, but less than or equal to 25. These numbers were paired to form the coordinates that determined the location of the 15 randomly chosen sampling points. These coordinates were recorded in the field notebook (refer to Table 9-3). Because no precision data on waste composition existed prior to sampling, the number of samples (15) was chosen as a conservative figure to more than allow for a sound statistical decision.

The actual samples were collected by employing a sampling device, which was constructed on site from available materials, and a weighted bottle. This device, which was used to access more remote areas of the tank, consisted of a weighted bottle, a rope marked off at 1-ft increments, and a discarded spool that originally contained electrical wire (refer to Figure 9-7).

Samples were collected by a three-person team. The person controlling the weighted bottle walked to the first circumference coordinate (149 ft), while the two persons holding the ropes attached to the spool walked along opposing catwalks toward the center of the tank. The person controlling the

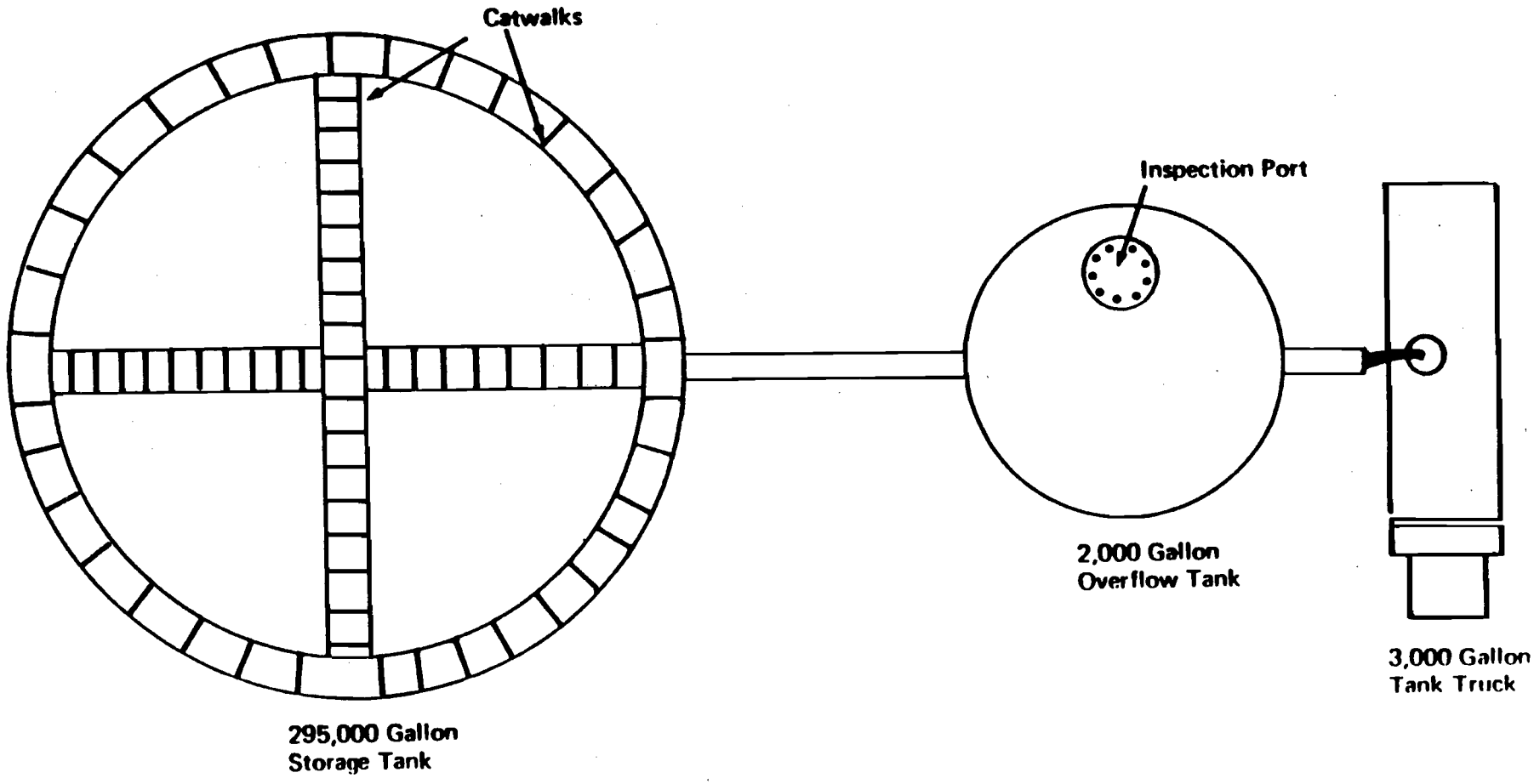

Figure 9-6. Bird's eye view of waste tank, overflow tank, tank truck and connecting plumbing.

TABLE 9-3. RANDOM COORDINATES FOR 295,000-GAL TANK

Sampling point	Circumference	Radius
1	149	4
2	86	22
3	94	13
4	99	0
5	23	10
6	58	2
7	52	22
8	104	16
9	23	25
10	51	4
11	77	14
12	12	5
13	151	15
14	83	23
15	99	18

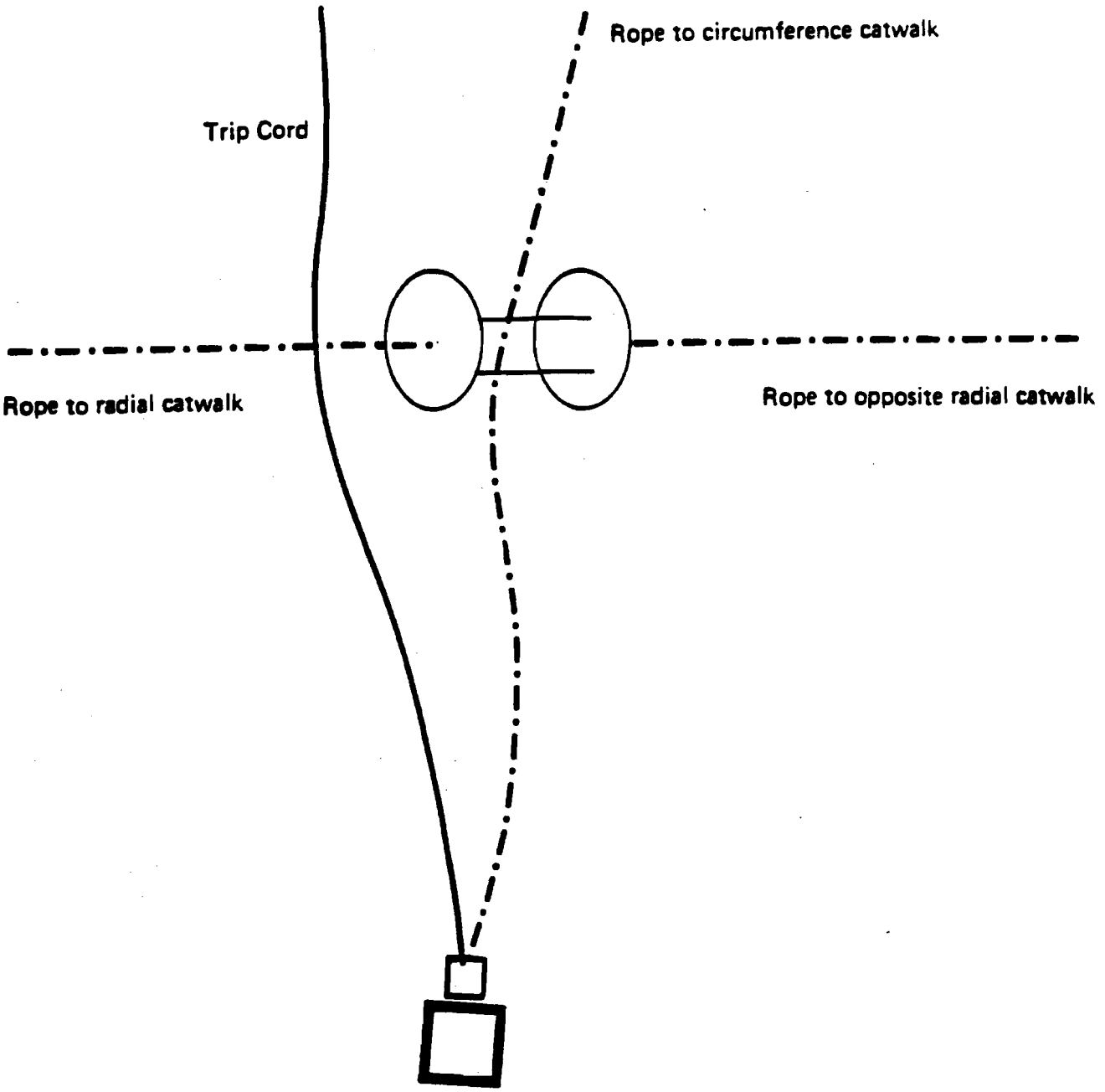

Figure 9-7. Device used to collect sample from the open tank.

weighted bottle measured off the radius coordinate (4 ft). The spool was then centered in the quadrant, the weighted bottle was lowered to the surface, and a sample was collected from the first 2 ft of waste. This sample was then transferred into a large, labeled sample container, which was used for compositing. This same process was repeated nine more times at the same location at different 2-ft depth intervals, resulting in the collection of a total of 10 component depth samples that were compiled in the field into one sample for that sampling point. This process was repeated at the remaining 14 sampling points, resulting in the collection of 15 vertical composite samples. These vertical composite samples were taken to address any vertical stratification that may have occurred.

The samples were properly preserved and stored, chain-of-custody procedures were completed, and the samples were submitted to the laboratory. A cost/benefit decision was made to composite aliquots of the samples into five composite samples that were submitted for analysis. (Following analysis, Equation 8 of Section 9.1 of this chapter was employed to determine if enough samples were analyzed to make a statistically sound decision. If the number of samples analyzed was not sufficient, then the samples would be recomposited to a lesser degree or analyzed individually.)

Because there was no information to prove that the waste in the smaller tank was the same as that in the larger tank, the operators decided that the smaller tank must also be sampled. The different construction of the smaller, enclosed tank mandated that a different sampling plan be designed. The only access to the tank was through a small inspection port on the top of the tank. This port would allow sampling only of a small portion of the tank contents; thus, to make a decision on the entire contents of the tank, one would have to assume that the waste in the vicinity of the inspection port was representative of the remainder of the tank contents. The operators were not willing to make this assumption because they determined that the liability of an incorrect decision overrode the convenience of facilitating the sampling effort.

To randomly sample the entire contents of the tank, a different plan was designed. This plan exploited the relatively small volume (approximately 6,000 gal) of the tank. A decision was made to rent two tank trucks and to sample the waste randomly over time as it drained from the tank into the tank trucks.

It was calculated that at a rate of 20 gal/min, it would take 300 min to drain the tank. From the random-number tables, 15 numbers that were greater than or equal to 0, but less than or equal to 300, were chosen in a manner similar to that employed for the larger tank. These numbers were recorded in the field notebook (refer to Table 9-4) at the time that they were encountered in the random-number table and were then assigned sampling point numbers according to their chronological order.

The 15 samples were collected at the previously chosen random times as the waste exited from a drainage hose into the tank trucks. These samples were collected in separate labeled containers, properly preserved and stored; chain-of-custody procedures were employed for transferral of the samples to the laboratory.

TABLE 9-4. RANDOM TIMES FOR 6,000-GAL TANK

Sampling point	Time (min)
11	153
10	122
8	85
6	55
5	46
15	294
12	195
1	5
13	213
9	99
2	29
4	41
7	74
3	31
14	219

The above example employed simple random sampling to determine the average composition and variance of the waste contained in the two tanks. The contents of the large tank were sampled randomly in space, whereas the contents of the smaller tank were sampled randomly over time.

The following example will involve the use of stratified random sampling, which is used when: (1) distinct strata are known to exist or (2) it is not known whether different strata exist, but an objective of the sampling effort is to discover the existence or nonexistence of strata.

A variation of this second reason for employing stratified random sampling is when cost considerations limit the number of samples that can be collected (e.g., when the budget allows for the collection of only six samples in a 40-acre lagoon). In this situation, where little is known about the composition of the waste, a concern exists that an area of the lagoon may be highly contaminated and yet may not be sampled. The smaller the number of samples, the greater the probability that an area of high contamination (a distinct stratum) could be missed, and the greater the probability that the sampling accuracy will suffer. Under such circumstances, a sampling plan may employ stratified random sampling to minimize the size of a highly contaminated area that could go unsampled.

For example, consider the situation where the budget allows only for the collection of six samples in a 40-acre lagoon. If simple random sampling is employed with such a small number of samples, there is a certain probability that large areas of the lagoon may go unsampled. One approach to minimizing the size of areas that may go unsampled is to divide the lagoon into three strata of equal size and randomly sample each stratum separately. This approach decreases the size of an area that can go unsampled to something less than one-third of the total lagoon area.

The following example details more traditional applications of stratified random sampling.

Example 2: Stratified Random Sampling of Effluents and Lagoons

A pigment manufacturing process has been generating wastes over a number of years. The pigment is generated in large batches that involve a 24-hr cycle. During the first 16 hr of the cycle, an aqueous sludge stream is discharged. This waste contains a high percentage of large-sized black particulate matter. The waste generated during the remaining 8 hr of the manufacturing cycle is an aqueous-based white sludge that consists of much smaller-sized particles than those found in the sludge generated in the first 16 hr of the batch process. This waste has been disposed of over the years into a 40-acre settling lagoon, allowing the particulate matter to settle out of solution while the water phase drains to an NPDES outfall at the opposite end of the lagoon. The smaller white pigment particles released in the last 8 hr of the batch process settle more slowly than the much larger black particles generated in the previous 16 hr. This settling pattern is quite apparent from the distinct colors of the wastes. The sludge in the quadrant closest to the waste influent pipe is black; the next quadrant is a light gray color, resulting from settling of both waste streams. The last two quadrants contain a pure white sludge, resulting from the settling of the small pigment particles.

Eventually, the facility operators decided that the settled particulate matter had to be removed to keep the settling lagoon functioning. In the past, this residual lagoon waste was found to be a hazardous waste due to its leachable barium content. Further studies determined that the source of the barium was a certain raw material that was released during the first 16 hr of batch process.

To minimize present disposal costs, the operators wanted to determine if the white sludge in the last two quadrants and the light gray waste were nonhazardous. Also, the operators had recently changed raw materials, with the intention of removing the source of barium in an attempt to minimize future disposal costs. Thus, the operators were interested in determining whether the currently generated waste was hazardous. If the altered waste stream was not hazardous, future lagoon sludge could be disposed of more economically as a solid waste. If the waste generated during the first 16 hr of the process remained hazardous but the waste generated during the following 8 hr was nonhazardous, the operators were willing to shift this latter waste to a second lagoon reserved for nonhazardous wastes. By sequestering the waste streams in this manner, the operators intended to decrease the amount of hazardous waste by precluding generation of additional amounts of hazardous waste under the "mixture rule."

To decide how the lagoon sludge should be handled, the operators arranged to have the lagoon sludge sampled. The objectives of sampling the lagoon sludge were to determine the average concentration and variance of leachable barium for the sludge in the entire lagoon and for each of the different sludges.

The dimensions of the 40-acre square lagoon were calculated to be 1,320 ft on a side, with the black and the gray sludge each covering a quadrant measuring 1,320 ft by 330 ft, and the white sludge covering the remaining area of the lagoon, which measured 1,320 ft by 660 ft (refer to Figure 9-8). The sludge had settled to a uniform thickness throughout the lagoon and was covered with 2 ft of water.

Because the leachable barium was assumed to be associated with the black sludge, which was concentrated in the first quadrant, a stratified random sampling approach was chosen. (Because of the obvious strata in the lagoon sludge, the stratified sampling strategy was expected to give a more precise estimate of the leachable barium, in addition to giving information specific to each stratum.)

When the actual sampling was being planned, it was decided that the hazards presented by the lagoon waste were minimal, and, that if proper precautions were employed, a stable and unsinkable boat could be used to collect samples. The samples were collected with a core sampler at random locations throughout each stratum. Because the cost of collecting samples was reasonable and no historical data were available to help determine the optimum number of samples, the operators decided to collect a total of 10 samples from each of the smaller strata and a total of 20 samples from the larger strata. They had confidence that this number of samples would allow them to detect a small significant difference between the mean concentration of leachable barium and the applicable regulatory threshold.

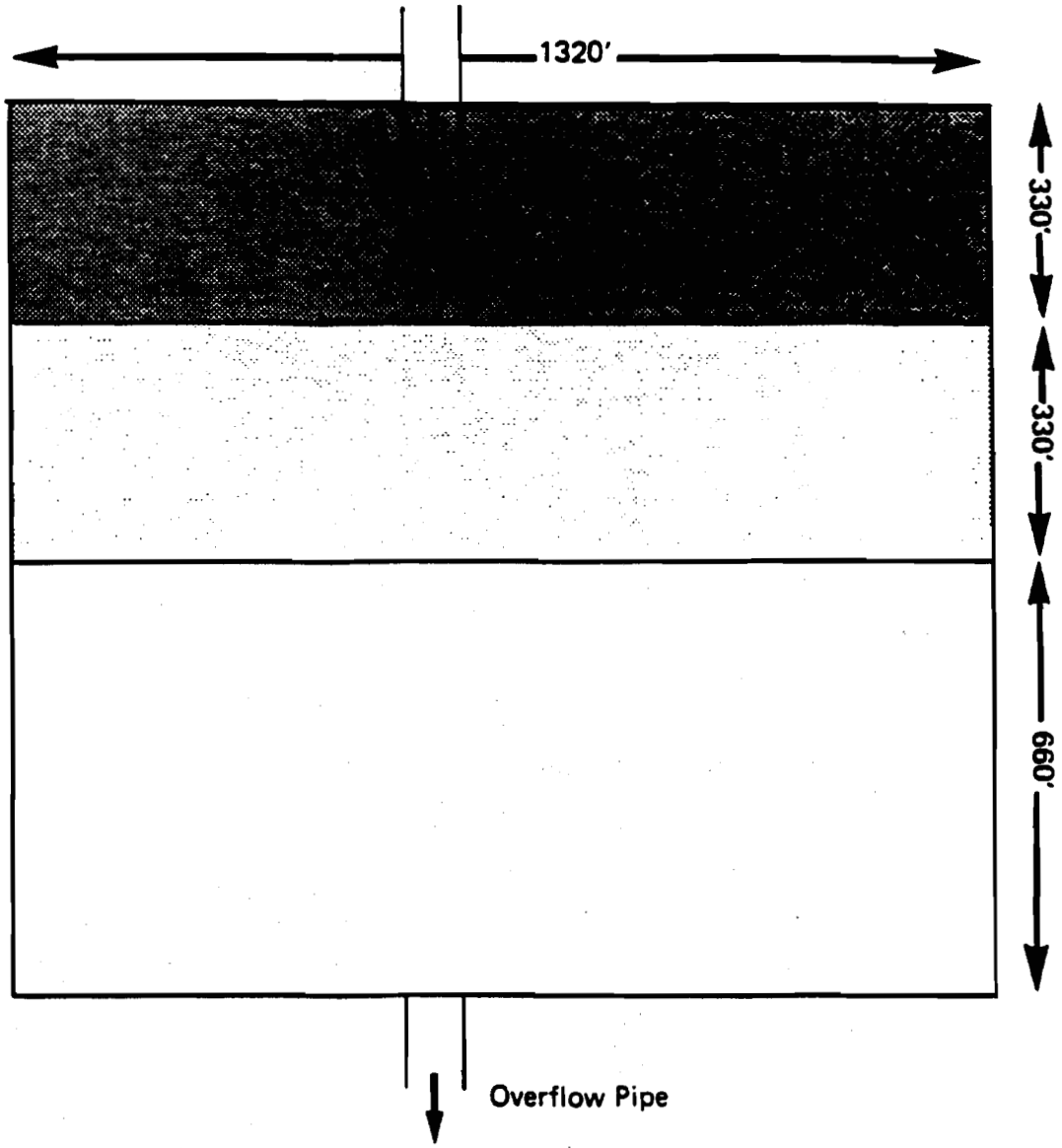

Figure 9-8. Schematic of the 40-acre settling lagoon displaying strata generated by a waste stream.

The locations of the random sampling points were determined by selecting length and width coordinates from a random-number table. This was done by indiscriminately choosing a page from the random-number tables and then a column on that page. The width coordinates of the two smaller quadrants were then chosen by proceeding down the column and listing the first 20 numbers that were greater than or equal to 0, but less than or equal to 330. The width coordinate for the third and largest stratum was chosen by proceeding down the column and selecting the first 20 numbers that were greater than or equal to 0, but less than or equal to 660. Because the lengths of the three quadrants were all 1,320 ft, the length coordinates were chosen by listing the first 40 numbers that were greater than or equal to 0 but less than or equal to 1,320. These coordinates were recorded in the field notebook (refer to nable 9-5).

The samples were collected by a four-person team. Two people remained onshore while two maneuvered the boat and collected the samples. The first sample in the first quadrant was collected by launching the boat at a distance of 41 ft from the corner, which was designated the origin, 0 ft. The boat proceeded out into the lagoon perpendicular to the long side of the quadrant. The person onshore released 134 ft of a measured rope, which allowed the boat to stop at the first sampling point (41, 134). The sample was then collected with a core sampler and transferred to a sample container. This process was repeated for all sampling points in the three strata. The samples were properly preserved and stored, and the chain-of-custody records documented the transfer of samples to the laboratory.

Aliquots of the samples were composited into five composite samples for each stratum. The mean and variance of each stratum were calculated by Equations 2(a) and 3(a), respectively. The mean and variance for the total lagoon were calculated by using Equations 2(b) and 3(b), respectively. Equation 6 was used to calculate a confidence interval for the leachable barium concentration, and the upper limit of this interval was compared with the regulatory threshold. (See Table 9-1, Section 9.1 of this chapter, for equations.)

As previously mentioned, the operators had recently changed their raw materials and were also interested in discovering if the currently generated waste was nonhazardous or if portions of this waste stream were nonhazardous. As described above, the waste effluent for the first 16 hr of the day was different from that discharged during the last 8 hr. However, because the same large plumbing system was used for both waste streams, there were two 2-hr periods during which the discharged waste was a mixture of the two different wastes.

With the above objectives in mind, the operators decided to employ stratified random sampling with four strata occurring over time, as opposed to the strata in space that were employed for sampling the lagoon. The four time strata were from 6:00 to 8:00 hr, from 8:00 to 20:00 hr, from 20:00 to 22:00 hr, and from 22:00 to 6:00 hr the following day. The two 2-hr strata were those time periods during which the waste was a mixture of the two different waste streams. The 12-hr stratum was the time period during which the large-sized particulate black waste was being discharged. The smaller particulate white waste was being discharged during the 8-hr stratum.

TABLE 9-5. RANDOM COORDINATES FOR EACH STRATUM IN THE 40-ACRE SETTLING LAGOON

	Sampling Point	Length (ft)	Width (ft)
Stratum #1 (Black)	1	41	134
	2	271	51
	3	968	32
	4	129	228
	5	472	137
	6	1,198	56
	7	700	261
	8	286	8
	9	940	26
	10	151	121
Stratum #2 (Gray)	1	1,173	109
	2	277	2
	3	438	302
	4	780	5
	5	525	135
	6	50	37
	7	26	127
	8	1,207	149
	9	1,231	325
	10	840	32
Stratum #3 (White)	1	54	374
	2	909	434
	3	1,163	390
	4	1,251	449
	5	1	609
	6	1,126	140
	7	717	235
	8	1,155	148
	9	668	433
	10	66	642
	11	462	455
	12	213	305
	13	1,220	541
	14	1,038	644
	15	508	376
	16	1,293	270
	17	30	38
	18	114	52
	19	1,229	570
	20	392	613

The flow rate was constant throughout the 24-hr period, and there were no precision data available for the waste. Therefore, it was decided that the number of samples collected in the 8- and 12-hr strata would be proportional to time. Because the 2-hr periods were times during which the composition of the waste was changing, it was decided to collect more samples to get a more precise estimate of the average composition of the waste during these time strata. Thus a total of 28 samples was collected.

The samples were collected at randomly chosen times within each time stratum. The random sampling times were chosen by employing a random-number table. After indiscriminately selecting a starting point, the first four numbers greater than or equal to 0, but less than or equal to 120 were selected for the 120-min strata from 6:00 to 8:00 hr. These minutes were then added to the starting time to determine when the four samples would be collected. In similar fashion, the remaining 24 sampling times were chosen. The random-number data were recorded in a laboratory notebook (refer to Table 9-6).

The samples were collected from the waste influent pipe with a wide-mouth bottle at the randomly chosen sampling times. The samples were properly preserved and stored and shipped to the laboratory, along with chain-of-custody records. The samples were subjected to analysis, and the data were evaluated in a manner similar to that employed for the samples of sludge collected in the different strata of the lagoon.

9.2.2.2 Waste

The sampling plan must address a number of factors in addition to statistical considerations. Obviously, one of the most important factors is the waste itself and its properties. The following waste properties are examples of what must be considered when designing a sampling plan:

1. Physical state: The physical state of the waste will affect most aspects of a sampling effort. The sampling device will vary according to whether the sample is liquid, gas, solid, or multiphasic. It will also vary according to whether the liquid is viscous or free-flowing, or whether the solid is hard or soft, powdery, monolithic, or clay-like.

   Wide-mouth sample containers will be needed for most solid samples and for sludges or liquids with substantial amounts of suspended matter. Narrow-mouth containers can be used for other wastes, and bottles with air-tight closures will be needed for gas samples or gases adsorbed on solids or dissolved in liquids.

   The physical state will also affect how sampling devices are deployed. A different plan will be developed for sampling a soil-like waste that can easily support the weight of a sampling team and its equipment than for a lagoon filled with a viscous sludge or a liquid waste.

TABLE 9-6. RANDOM TIMES FOR THE WASTE EFFLUENT

	Sampling Point	Random Minute	Time
Stratum #1 (6:00 to 8:00 hours)	1	28	6:28
	2	62	7:02
	3	99	7:39
	4	112	7:52
Stratum #2 (8:00 to 20:00 hours)	1	11	8:11
	2	107	9:47
	3	156	10:36
	4	173	10:53
	5	296	12:56
	6	313	13:13
	7	398	14:38
	8	497	16:17
	9	555	17:15
	10	600	18:00
	11	637	18:37
	12	706	19:46
Stratum #3 (20:00 to 22:00 hours)	1	13	20:13
	2	52	20:52
	3	88	21:28
	4	108	21:48
Stratum #4 (22:00 to 6:00 hours	1	48	22:48
	2	113	23:53
	3	153	24:33
	4	189	1:09
	5	227	1:47
	6	290	2:49
	7	314	3:14
	8	474	5:44

The sampling strategy will have to vary if the physical state of the waste allows for stratification (e.g., liquid wastes that vary in density or viscosity or have a suspended solid phase), homogenization or random heterogeneity.

2. Volume: The volume of the waste, which has to be represented by the samples collected, will have an effect upon the choice of sampling equipment and strategies. Sampling a 40-acre lagoon requires a different approach from sampling a 4-sq-ft container. Although a 3-ft depth can be sampled with a Coliwasa or a drum thief, a weighted bottle may be required to sample a 50-ft depth.

3. Hazardous properties: Safety and health precautions and methods of sampling and shipping will vary dramatically with the toxicity, ignitability, corrosivity, and reactivity of the waste.

4. Composition: The chosen sampling strategy will reflect the homogeneity, random heterogeneity, or stratification of the waste in time or over space.

9.2.2.3 Site

Site-specific factors must be considered when designing a sampling plan. A thorough examination of these factors will minimize oversights that can affect the success of sampling and prevent attainment of the program objectives. At least one person involved in the design and implementation of the sampling plan should be familiar with the site, or a presampling site visit should be arranged. If nobody is familiar with the site and a visit cannot be arranged, the sampling plan must be written to account for the possible contingencies. Examples of site-specific factors that should be considered follow:

1. Accessibility: The accessibility of waste can vary substantially. Some wastes are accessed by the simple turning of a valve; others may require that an entire tank be emptied or that heavy equipment be employed. The accessibility of a waste at the chosen sampling location must be determined prior to design of a sampling plan.

2. Waste generation and handling: The waste generation and handling process must be understood to ensure that collected samples are representative of the waste. Factors which must be known and accounted for in the sampling plan include: if the waste is generated in batches; if there is a change in the raw materials used in a manufacturing process; if waste composition can vary substantially as a function of process temperatures or pressures; and if storage time after generation may vary.

3. Transitory events: Start-up, shut-down, slow-down, and maintenance transients can result in the generation of a waste that is not representative of the normal waste stream. If a sample was unknowingly collected at one of these intervals, incorrect conclusions could be drawn.

4. Climate: The sampling plan should specify any clothing needed for personnel to accommodate any extreme heat or cold that may be encountered. Dehydration and extensive exposure to sun, insects, or poisonous snakes must be considered.

5. Hazards: Each site can have hazards -- both expected and unexpected. For example, a general understanding of a process may lead a sampling team to be prepared for dealing with toxic or reactive material, but not for dealing with an electrical hazard or the potential for suffocation in a confined space. A thorough sampling plan will include a health and safety plan that will counsel team members to be alert to potential hazards.

9.2.2.4 Equipment

The choice of sampling equipment and sample containers will depend upon the previously described waste and site considerations. For the following reasons, the analytical chemist will play an important role in the selection of sampling equipment:

1. The analytical chemist is aware of the potential interactions between sampling equipment or container material with analytes of interest. As a result, he/she can suggest a material that minimizes losses by adsorption, volatilization, or contamination caused by leaching from containers or sampling devices.

2. The analytical chemist can specify cleaning procedures for sampling devices and containers that minimize sample contamination and cross contamination between consecutive samples.

3. The analytical chemist's awareness of analyte-specific properties is useful in selecting the optimum equipment (e.g., choice of sampling devices that minimize agitation for those samples that will be subjected to analysis for volatile compounds).

The final choice of containers and sampling devices will be made jointly by the analytical chemist and the group designing the sampling plan. The factors that will be considered when choosing a sampling device are:

1. Negative contamination: The potential for the measured analyte concentration to be artificially low because of losses from volatilization or adsorption.

2. Positive contamination: The potential for the measured analyte to be artifically high because of leaching or the introduction of foreign matter into the sample by particle fallout or gaseous air contaminants.

3. Cross contamination: A type of positive contamination caused by the introduction of part of one sample into a second sample during sampling, shipping, or storage.

4. Required sample volume for physical and/or chemical analysis.

5. "Ease of use" of the sampling device and containers under the conditions that will be encountered on-site. This includes the ease of shipping to and from the site, ease of deployment, and ease of cleaning.

6. The degree of hazard associated with the deployment of one sampling device versus another.

7. Cost of the sampling device and of the labor for its deployment.

This section describes examples of sampling equipment and suggests potential uses for this equipment. Some of these devices are commercially available, but others will have to be fabricated by the user. The information in this section is general in nature and therefore limited.

Because each sampling situation is unique, the cited equipment and applications may have to be modified to ensure that a representative sample is collected and its physical and chemical integrity are maintained. It is the responsibility of those persons conducting sampling programs to make the appropriate modifications.

Table 9-7 contains examples of sampling equipment and potential applications. It should be noted that these suggested sampling devices may not be applicable to a user's situation due to waste- or site-specific factors. For example, if a waste is highly viscous or if a solid is clay-like, these properties may preclude the use of certain sampling devices. The size and depth of a lagoon or tank, or difficulties associated with accessing the waste, may also preclude use of a given device or require modification of its deployment.

The most important factors to consider when choosing containers for hazardous waste samples are compatibility with the waste, cost, resistance to breakage, and volume. Containers must not distort, rupture, or leak as a result of chemical reactions with consitituents of waste samples. Thus, it is important to have some idea of the properties and composition of the waste. The containers must have adequate wall thickness to withstand handling during sample collection and transport to the laboratory. Containers with wide mouths are often desirable to facilitate transfer of samples from samplers to containers. Also, the containers must be large enough to contain the optimum sample volume.

Containers for collecting and storing hazardous waste samples are usually made of plastic or glass. Plastics that are commonly used to make the containers include high-density or linear polyethylene (LPE), conventional polyethylene, polypropylene, polycarbonate, Teflon FEP (fluorinated ethylene propylene), polyvinyl chloride (PVC), or polymethylpentene. Teflon FEP is almost universally usable due to its chemical inertness and resistance to breakage. However, its high cost severely limits its use. LPE, on the other hand, usually offers the best combination of chemical resistance and low cost when samples are to be analyzed for inorganic parameters.

TABLE 9-7. EXAMPLES OF SAMPLING EQUIPMENT FOR PARTICULAR WASTE TYPES

	Waste location or container								
Waste type	Drum	Sacks and bags	Open-bed truck	Closed-bed truck	Storage tanks or bins	Waste piles	Ponds, lagoons, & pits	Conveyor belt	Pipe
Free-flowing liquids and slurries	Coliwasa	N/A	N/A	Coliwasa	Weighted bottle	N/A	Dipper	N/A	Dipper
Sludges	Trier	N/A	Trier	Trier	Trier	a	a		
Moist powders or granules	Trier	Trier	Trier	Trier	Trier	Trier	Trier	Shovel	Dipper
Dry powders or granules	Thief	Thief	Thief	Thief	a	Thief	Thief	Shovel	Dipper
Sand or packed powders and granules	Auger	Auger	Auger	Auger	Thief	Thief	a	Dipper	Dipper
Large-grained solids	Large Trier	Large Trier	Large Trier	Large Trier	Large Trier	Large Trier	Large Trier	Trier	Dipper

[a]This type of sampling situation can present significant logistical sampling problems, and sampling equipment must be specifically selected or designed based on site and waste conditions. No general statement about appropriate sampling equipment can be made.

Glass containers are relatively inert to most chemicals and can be used to collect and store almost all hazardous waste samples, exept those that contain strong alkali and hydrofluoric acid. Glass soda bottles are suggested due to their low cost and ready availability. Borosilicate glass containers, such as Pyrex and Corex, are more inert and more resistant to breakage than soda glass, but are expensive and not always readily available. Glass containers are generally more fragile and much heavier than plastic containers. Glass or FEP containers must be used for waste samples that will be analyzed for organic compounds.

The containers must have tight, screw-type lids. Plastic bottles are usually provided with screw caps made of the same material as the bottles. Buttress threads are recommended. Cap liners are not usually required for plastic containers. Teflon cap liners should be used with glass containers supplied with rigid plastic screw caps. (These caps are usually provided with waxed paper liners.) Teflon liners may be purchased from plastic specialty supply houses (e.g., Scientific Specialties Service, Inc., P.O. Box 352, Randallstown, Maryland 21133). Other liners that may be suitable are polyethylene, polypropylene, and neoprene plastics.

If the samples are to be submitted for analysis of volatile compounds, the samples must be sealed in air-tight containers.

Prior to sampling, a detailed equipment list should be compiled. This equipment list should be comprehensive and leave nothing to memory. The categories of materials that should be considered are:

1. Personnel equipment, which will include boots, rain gear, disposable coveralls, face masks and cartridges, gloves, etc.

2. Safety equipment, such as portable eyewash stations and a first-aid kit.

3. Field test equipment, such as pH meters and Draeger tube samplers.

4. An ample supply of containers to address the fact that once in the field, the sampling team may want to collect 50% more samples than originally planned or to collect a liquid sample, although the sampling plan had specified solids only.

5. Additional sampling equipment for use if a problem arises, e.g., a tool kit.

6. Shipping and office supplies, such as tape, labels, shipping forms, chain-of-custody forms and seals, field notebooks, random-number tables, scissors, pens, etc.

Composite Liquid Waste Sampler (Coliwasa)

The Coliwasa is a device employed to sample free-flowing liquids and slurries contained in drums, shallow tanks, pits, and similar containers. It is especially useful for sampling wastes that consist of several immiscible liquid phases.

The Coliwasa consists of a glass, plastic, or metal tube equipped with an end closure that can be opened and closed while the tube is submerged in the material to be sampled (refer to Figure 9-9).

Weighted Bottle

This sampler consists of a glass or plastic bottle, sinker, stopper, and a line that is used to lower, raise, and open the bottle. The weighted bottle samples liquids and free-flowing slurries. A weighted bottle with line is built to the specifications in ASTM Methods D270 and E300. Figure 9-10 shows the configuration of a weighted-bottle sampler.

Dipper

The dipper consists of a glass or plastic beaker clamped to the end of a two- or three-piece telescoping aluminum or fiberglass pole that serves as the handle. A dipper samples liquids and free-flowing slurries. Dippers are not available commercially and must be fabricated (Figure 9-11).

Thief

A thief consists of two slotted concentric tubes, usually made of stainless steel or brass. The outer tube has a conical pointed tip that permits the sampler to penetrate the material being sampled. The inner tube is rotated to open and close the sampler. A thief is used to sample dry granules or powdered wastes whose particle diameter is less than one-third the width of the slots. A thief (Figure 9-12) is available at laboratory supply stores.

Trier

A trier consists of a tube cut in half lengthwise with a sharpened tip that allows the sampler to cut into sticky solids and to loosen soil. A trier samples moist or sticky solids with a particle diameter less than one-half the diameter of the trier. Triers 61 to 100 cm long and 1.27 to 2.54 cm in diameter are available at laboratory supply stores. A large trier can be fabricated (see Figure 9-13).

Auger

An auger consists of sharpened spiral blades attached to a hard metal central shaft. An auger samples hard or packed solid wastes or soil. Augers are available at hardware and laboratory supply stores.

Scoops and Shovels

Scoops and shovels are used to sample granular or powdered material in bins, shallow containers, and conveyor belts. Scoops are available at laboratory supply houses. Flat-nosed shovels are available at hardware stores.

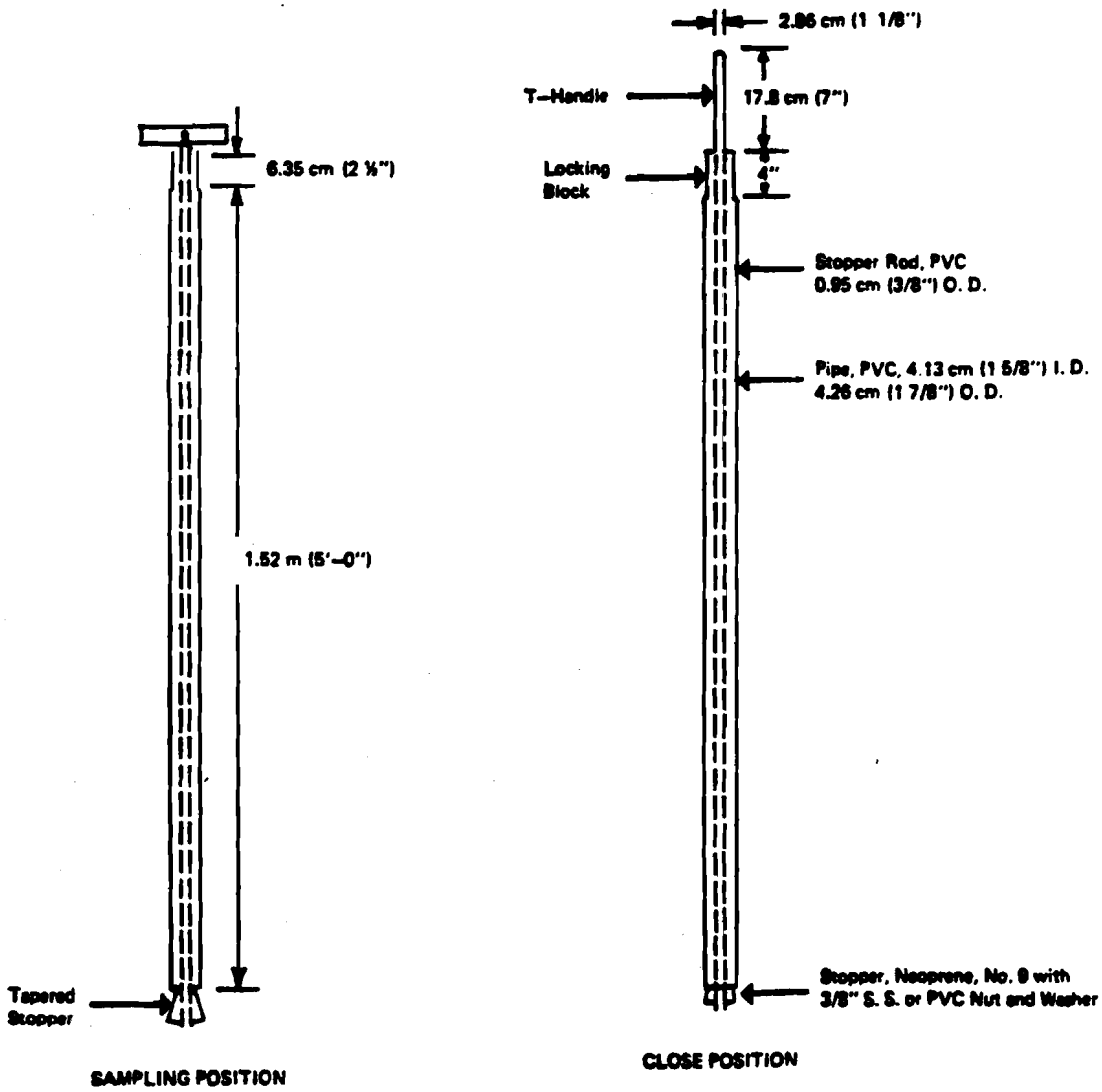

Figure 9-9. Composite liquid waste sampler (Coliwasa).

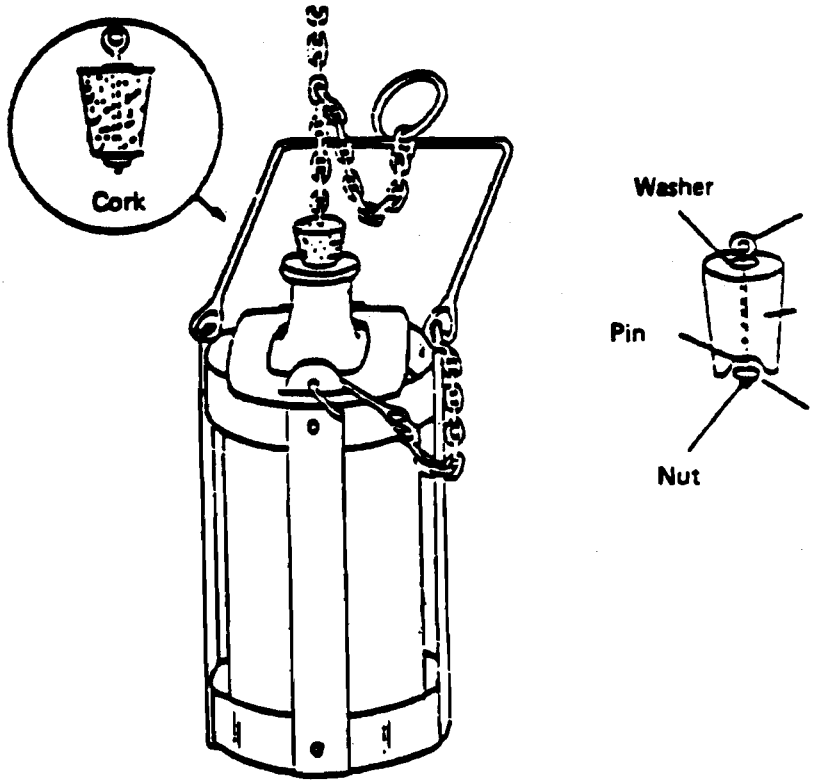

Figure 9-10. Weighted bottle sampler.

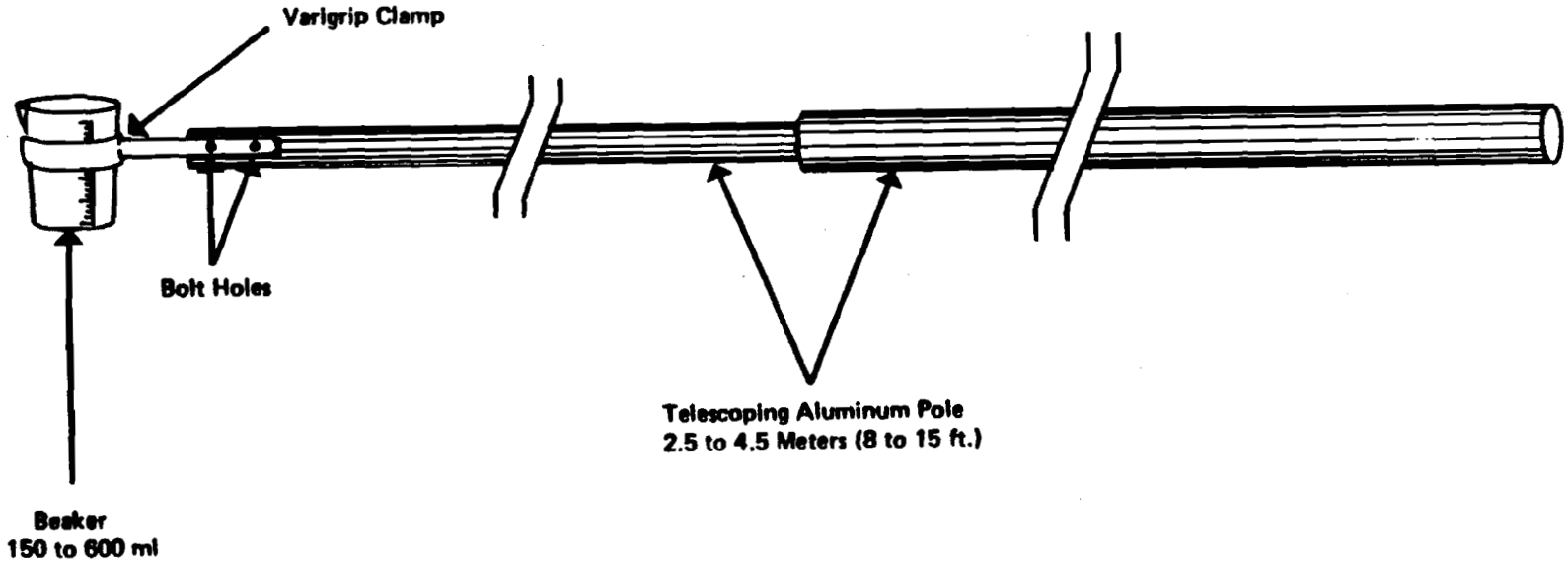

Figure 9-11. Dipper.

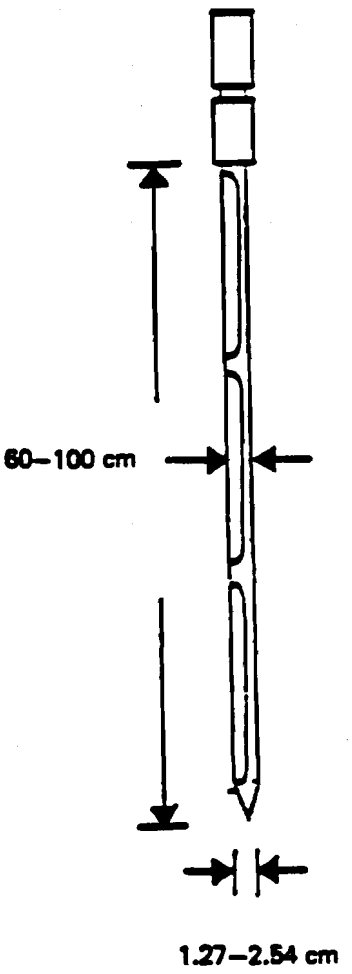

Figure 9-12. Thief sampler.

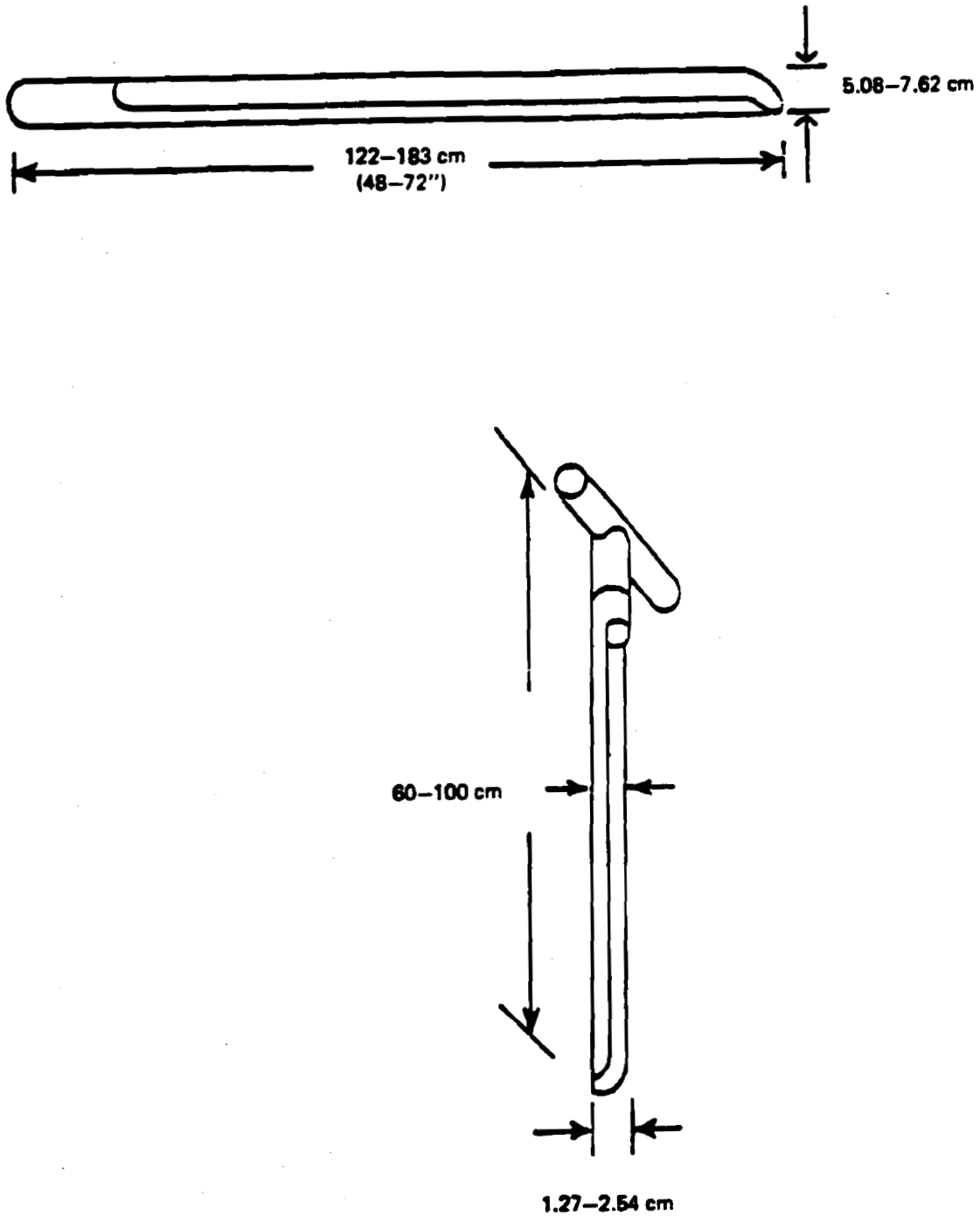

Figure 9-13. Sampling triers.

Bailer

The bailer is employed for sampling well water. It consists of a container attached to a cable that is lowered into the well to retrieve a sample. Bailers can be of various designs. The simplest is a weighted bottle or basally capped length of pipe that fills from the top as it is lowered into the well. Some bailers have a check valve, located at the base, which allows water to enter from the bottom as it is lowered into the well. When the bailer is lifted, the check valve closes, allowing water in the bailer to be brought to the surface. More sophisticated bailers are available that remain open at both ends while being lowered, but can be sealed at both top and bottom by activating a triggering mechanism from the surface. This allows more reliable sampling at discrete depths within a well. Perhaps the best-known bailer of this latter design is the Kemmerer sampler.

Bailers generally provide an excellent means for collecting samples from monitoring wells. They can be constructed from a wide variety of materials compatible with the parameter of interest. Because they are relatively inexpensive, bailers can be easily dedicated to an individual well to minimize cross contamination during sampling. If not dedicated to a well, they can be easily cleaned to prevent cross contamination. Unfortunately, bailers are frequently not suited for well evacuation because of their small volume.

Suction Pumps

As the name implies, suction pumps operate by creating a partial vacuum in a sampling tube. This vacuum allows the pressure exerted by the atmosphere on the water in the well to force water up the tube to the surface. Accordingly, these pumps are located at the surface and require only that a transmission tube be lowered into the well. Unfortunately, their use is limited by their reliance on suction to depths of 20 to 25 ft, depending on the pump. In addition, their use may result in out-gassing of dissolved gases or volatile organics and is therefore limited in many sampling applications. In spite of this, suction methods may provide a suitable means for well evacuation because the water remaining in the well is left reasonably undisturbed.

A variety of pumps that operate on this principle are available, but the ones most commonly suggested for monitoring purposes are the centrifugal and peristaltic pumps. In the centrifugal pump, the fluid is displaced by the action of an impeller rotating inside the pump chamber. This discharges water by centrifugal force. The resulting pressure drop in the chamber creates a suction and causes water to enter the intake pipe in the well. These pumps can provide substantial yields and are readily available and inexpensive. The disadvantages are that they require an external power source and may be difficult to clean between sampling events. In addition, the materials with which these pumps are constructed may frequently be incompatible with certain sample constituents. However, their substantial pumping rates make them suitable for well evacuation.

Peristaltic pumps operate in a manner similar to centrifugal pumps but displace the fluid by mechanical peristalsis. A flexible transmission line is mounted around the perimeter of the pump chamber, and rotating rollers compress the tubing, forcing fluid movement ahead (the peristaltic effect) and inducing suction behind each roller. This design isolates the sample from the moving part of the pump and allows for easy cleaning by removal and replacement of the flexible tubing. Unfortunately, peristaltic pumps are generally capable of providing only relatively low yields. They are, therefore, not ideally suited to well evacuation.

Positive Displacement Pumps

A variety of positive displacement pumps are available for use in withdrawing water from wells. These methods utilize some pumping mechanism, placed in the well, that forces water from the bottom of the well to the surface by some means of positive displacement. This minimizes the potential for aerating or stripping volatile organics from the sample during removal from the well.

The submersible centrifugal pump is one common example of a positive displacement pump. It works in a manner similar to the centrifugal suction lift pump previously described, except that, in this case, both the pump and electric motor are lowered into the well. As the impeller rotates and fluid is brought into the pump, fluid is displaced up the transmission line and out of the well. These pumps are capable of providing a high yield. However, they require an external source of power and are frequently constructed with materials and contain lubricants incompatible with certain sample constituents, particularly organics. They also require considerable equipment and effort to move from well to well. Cleaning between sampling events is difficult as well, and, until recently, they have not been available for well diameters smaller than 3 in.

Piston-driven or reciprocating piston pumps are another example of common positive displacement pumps. These pumps consist of a piston in a submerged cylinder operated by a rod connected to the drive mechanism at the surface. A flap valve or ball-check valve is located immediately above or below the piston cylinder. As the piston is lowered in the cylinder, the check valve opens, and water fills the chamber. On the upstroke, the check valve closes, and water is forced out of the cylinder, up into the transmission line, and to the surface. The transmission line or piston contains a second check valve that closes on the downstroke, preventing water from re-entering the cylinder. These pumps are capable of providing high yields. However, moving these pumps from well to well is difficult, and their use in monitoring programs may require that a pump be dedicated to each well. Many of these pumps may not be constructed with materials compatible with monitoring certain constituents.

A special adaptation of this pump has recently become available for use in ground water monitoring. These piston pumps use compressed gas, rather than a rod connected to a driving mechanism at the surface, to drive the pistons. This provides a much more convenient and portable means for collecting samples from monitoring wells. Compressed-gas pumps provide good yields and can be constructed with materials compatible with many sampling programs.

Another positive displacement pump applicable for monitoring purposes is the gas-operated squeeze pump. This pump was originally developed by R. F. Middleburg of the U.S.G.S. and consequently is referred to as the Middleburg pump. It consists principally of a collapsible membrane inside a long, rigid housing, a compressed gas supply, and appropriate control valves. When the pump is submerged, water enters the collapsible membrane through the bottom check valve. After the membrane has filled, gas pressure is applied to the annular space between the rigid housing and membrane, forcing the water upward through a sampling tube. When the pressure is released, the top check valve prevents the sample from flowing back down the discharge line, and water from the well again enters the pump through the bottom check valve.

Gas-operated squeeze pumps offer a number of advantages for use in ground water monitoring programs. They can be constructed in diameters as small as 1 in. and from a wide variety of materials. They are also relatively portable and are capable of providing a fair range of pumping rates. Most important, the driving gas does not contact the water sample, so that possible contamination or gas stripping does not occur. However, they do require a gas source, and withdrawal of water from substantial depths may require large gas volumes and long pumping cycles.

Jet pumps, a common type of submersible pump used in small domestic water wells, may in some cases be suggested for use in monitoring wells. These pumps operate by injecting water through a pipe down into the well. A venturi device is located at the intake portion of the pump. As the water injected from the surface passes through the constricted portion of the venturi, the velocity increases and pressures decrease according to Bernoulli's principle. If the discharge velocity at the nozzle is great enough, the pressure at this point will be lowered sufficiently to draw water into the venturi assembly through the intake and to bring it to the surface with the original water injected into the well. This additional increment of water is then made available at the surface as the pump's output. Because jet pumps require priming with water and because the water taken from the well mixes with water circulating in the system, they are clearly not applicable to collecting samples for monitoring purposes. For similar reasons, their use is not recommended for well evacuation.

Pressure-Vacuum Lysimeters

The basic construction of pressure-vacuum lysimeters (Wood, 1973), shown in Figure 9-14, consists of a porous ceramic cup, with a bubbling pressure of 1 bar or greater, attached to a short piece of PVC pipe of suitable diameter. Two tubes extend down into the device, as illustrated. Data by Silkworth and Grigal (1981) indicate that, of the two commercially available sampler sizes (2.2 and 4.8 cm diameter), the larger ceramic cup sampler is more reliable, influences water quality less, and yields samples of suitable volume for analysis.

Detailed installation instructions for pressure-vacuum lysimeters are given by Parizek and Lane (1970). Significant modification may be necessary to adapt these instruments to field use when heavy equipment is used. To prevent channelling of contaminated surface water directly to the sampling device, the sampler may be installed in the side wall of an access trench. Because random placement procedures may locate a sampler in the middle of an

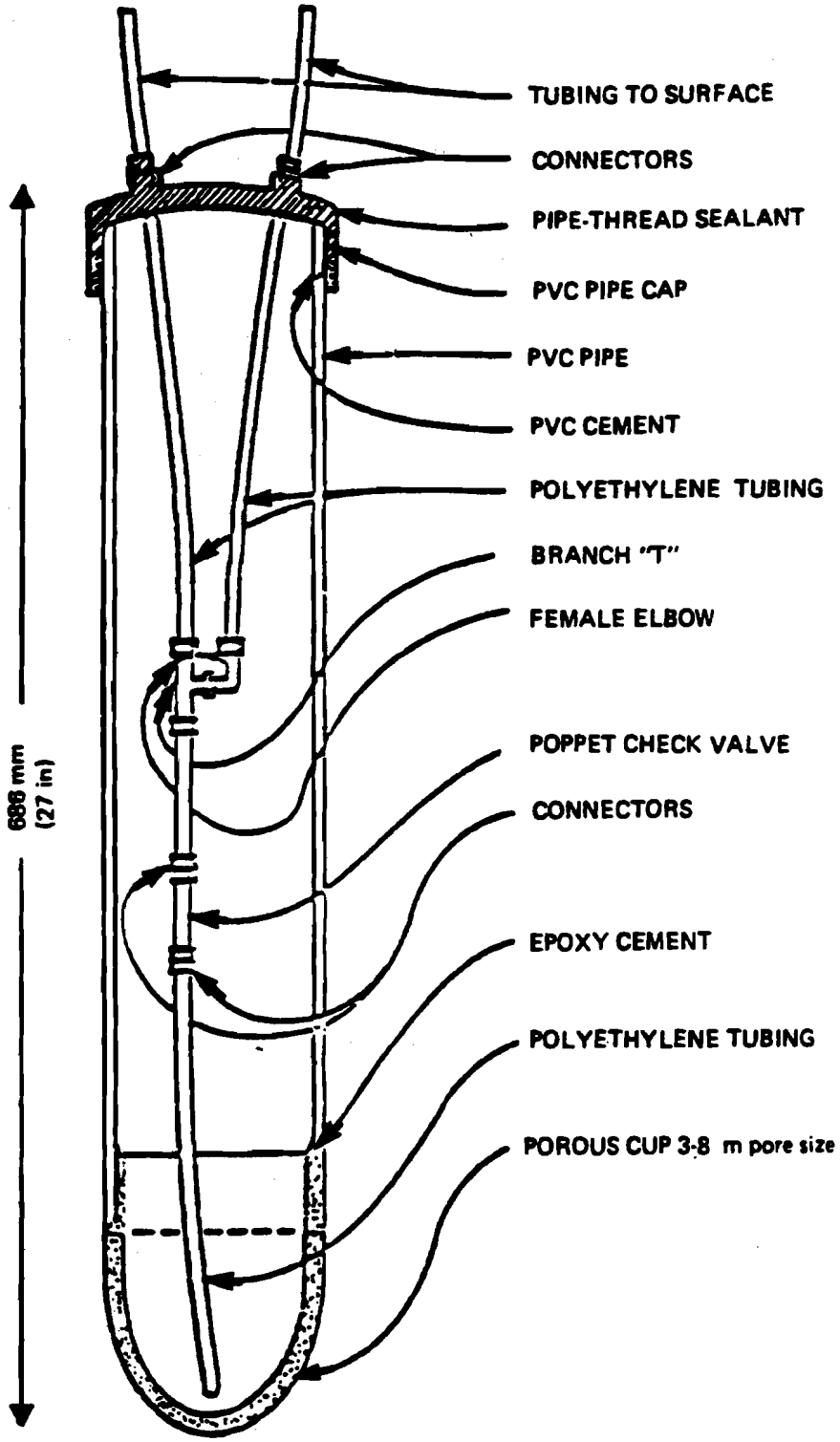

Figure 9-14. One example of a pressure-vacuum lysimeter (Wood, 1973). Reprinted by permission of the American Geophysical Union.

active area, the sample collection tube should be protected at the surface from heavy equipment by a manhole cover, brightly painted steel cage, or other structure. Another problem associated with such sampler placement is that its presence may alter waste management activities (i.e., waste applications, tilling, etc., will avoid the location); therefore, the sampler may not yield representative leachate samples. This problem may be avoided by running the collection tube horizontally underground about 10 m before surfacing.

For sampling after the unit is in place, a vacuum is placed on the system and the tubes are clamped off. Surrounding soil water is drawn into the ceramic cup and up the polyethylene tube. To collect the water sample, the vacuum is released, and one tube is placed in a sample container. Air pressure is applied to the other tube, forcing the liquid up the tube and into the sample container. Preliminary testing should ensure that waste products can pass into the ceramic cup. If sampling for organics, an inert tubing, such as one made of Teflon, should be substituted for the polyethylene pipe to prevent organic contamination.

The major advantages of these sampling devices are that they are easily available, relatively inexpensive to purchase and install, and quite reliable. The major disadvantage is the potential for water quality alterations due to the ceramic cup; this possible problem requires further testing. For a given installation, the device chosen should be specifically tested using solutions containing the soluble hazardous constituents of the waste to be land treated. This device is not recommended for volatiles unless a special trap device is used (Hazardous Waste Land Treatment, SW-874).

Vacuum Extractor

Vacuum extractors were developed by Duke and Haise (1973) to extract moisture from soils above the ground water table. The basic device consists of a stainless steel trough that contains ceramic tubes packed in soil. The unit is sized not to interfere with ambient soil water potentials (Corey, 1974); it is installed at a given depth in the soil with a slight slope toward the collection bottle, which is in the bottom of an adjacent access hole. The system is evacuated and moisture is moved from the adjacent soil into the ceramic tubes and into the collection bottle, from which it can be withdrawn as desired. The advantage of this system is that it yields a quantitative estimate of leachate flux as well as provides a water sample for analysis. The volume of collected leachate per unit area per unit time is an estimate of the downward movement of leachate water at that depth. The major disadvantages to this system are: it is delicate; it requires a trained operator; it estimates leachate quantity somewhat lower than actual field drainage; and it disturbs the soil above the sampler. Further details about the use of the vacuum extractor are given by Trout et al. (1975). Performance of this device when installed in clay soils is generally poor.

Trench Lysimeters

Trench lysimeters are named for the large access trench, or caisson, necessary for operation. Basic installation, as described by Parizek and Lane (1970), involves excavating a rather large trench and shoring up the side walls, taking care to leave open areas so that samplers can be placed in the side walls. Sample trays are imbedded in the side walls and connected by tubing to sample collection containers. The entire trench area is then covered to prevent flooding. One significant danger in using this system is the potential for accumulation of hazardous fumes in the trench, possibly endangering the health and safety of the person collecting the samples.

Trench lysimeters function by intercepting downward-moving water and diverting it into a collection device located at a lower elevation. The intercepting agent may be an open-ended pipe, sheet metal trough, pan, or other similar device. Pans 0.9 to 1.2 m in diameter have been successfully used in the field by Tyler and Thomas (1977). Because there is no vacuum applied to the system, only free water in excess of saturation is sampled. Consequently, samples are plentiful during rainy seasons but are nonexistent during the dry season.

Another variation of this system is to use a funnel filled with clean sand inserted into the sidewall of the trench. Free water will drain into a collection chamber, from which a sample is periodically removed by vacuum. A small sample collection device such as this may be preferable to the large trench because the necessary hole is smaller, so that installation is easier (Figure 9-15).

9.2.2.5 Quality Assurance and Quality Control

Quality assurance (QA) can briefly be defined as the process for ensuring that all data and the decisions based on these data are technically sound, statistically valid, and properly documented. Quality control (QC) procedures are the tools employed to measure the degree to which these quality assurance objectives are met.

A data base cannot be properly evaluated for accuracy and precision unless it is accompanied by quality assurance data. In the case of waste evaluation, these quality assurance data result from the implementation of quality control procedures during sampling and analysis. Quality control requirements for specific analytical methods are given in detail in each method in this manual; in this subsection, quality assurance and quality control procedures for sampling will be discussed.

Quality control procedures that are employed to document the accuracy and precision of sampling are:

1. Trip Blanks: Trip blanks should accompany sample containers to and from the field. These samples can be used to detect any contamination or cross-contamination during handling and transportation.

2. Field Blanks: Field blanks should be collected at specified frequencies, which will vary according to the probability of

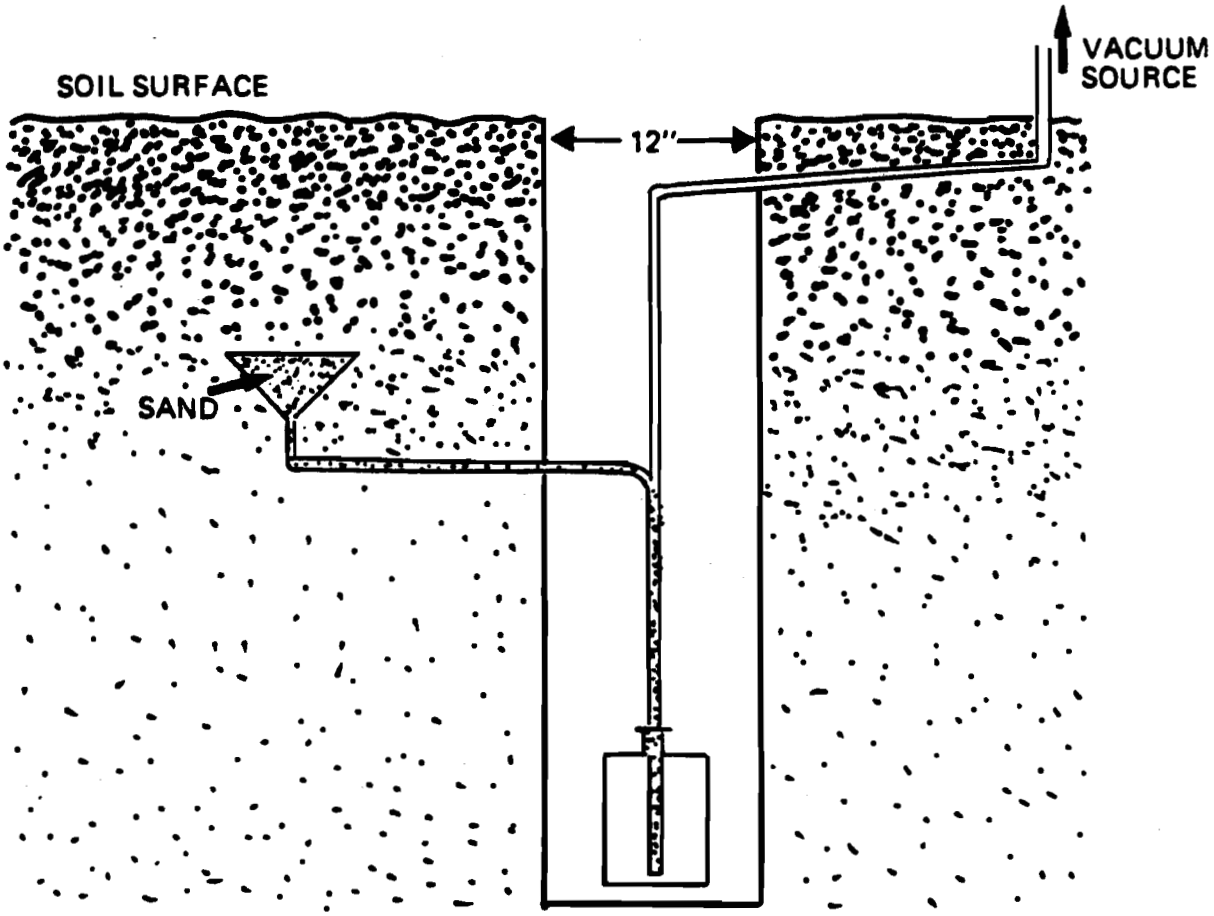

Figure 9-15. Schematic diagram of a sand filled funnel used to collect leachate from the unsaturated zone.

contamination or cross-contamination. Field blanks are often metal- and/or organic-free water aliquots that contact sampling equipment under field conditions and are analyzed to detect any contamination from sampling equipment, cross contamination from previously collected samples, or contamination from conditions during sampling (e.g., airborne contaminants that are not from the waste being sampled).

3. Field Duplicates: Field duplicates are collected at specified frequencies and are employed to document precision. The precision resulting from field duplicates is a function of the variance of waste composition, the variance of the sampling technique, and the variance of the analytical technique.

4. Field Spikes: Field spikes are infrequently used to determine the loss of parameters of interest during sampling and shipment to the laboratories. Because spiking is done in the field, the making of spiked samples or spiked blanks is susceptible to error. In addition, compounds can be lost during spiking, and equipment can be contaminated with spiking solutions. To eliminate these and other problems, some analysts spike blanks or matrices similar to the waste in the laboratory and ship them, along with sample containers, to the field. This approach also has its limitation because the matrix and the handling of the spike are different from those of the actual sample. In all cases, the meaning of a low field-spike recovery is difficult to interpret, and thus, field spikes are not commonly used.

In addition to the above quality control samples, a complete quality assurance program will ensure that standard operating procedures (SOPs) exist for all essential aspects of a sampling effort. SOPs should exist for the following steps in a sampling effort:

1. Definition of objectives (refer to Section 9.2.1).

2. Design of sampling plans (refer to Section 9.2.2).

3. Preparation of containers and equipment (refer to the specific analytical methods).

4. Maintenance, calibration, and cleaning of field equipment (refer to instrument manuals or consult a chemist for cleaning protocols).

5. Sample preservation, packaging, and shipping (refer to the analytical methods and to Section 9.2.2.7).

6. Health and safety protocols (refer to Section 9.2.2.6).

7. Chain-of-custody protocols (refer to Section 9.2.2.7).

In addition to the above protocols, numerous other QA/QC protocols must be employed to document the accuracy of the analytical portion of a waste evaluation program.

9.2.2.6 Health and Safety

Safety and health must also be considered when implementing a sampling plan. A comprehensive health and safety plan has three basic elements: (1) monitoring the health of field personnel; (2) routine safety procedures; and (3) emergency procedures.

Employees who perform field work, as well as those exposed to chemicals in the laboratory, should have a medical examination at the initiation of employment and routinely thereafter. This exam should preferably be performed and evaluated by medical doctors who specialize in industrial medicine. Some examples of parts of a medical examination that ought to be performed are: documentation of medical history; a standard physical exam; pulmonary functions screening; chest X-ray; EKG; urinalysis; and blood chemistry. These procedures are useful to: (1) document the quality of an employee's health at the time of matriculation; (2) ensure the maintenance of good health; and (3) detect early signs of bodily reactions to chemical exposures so they can be treated in a timely fashion. Unscheduled examinations should be performed in the event of an accident, illness, or exposure or suspected exposure to toxic materials.

Regarding safety procedures, personnel should be aware of the common routes of exposure to chemicals (i.e., inhalation, contact, and ingestion) and be instructed in the proper use of safety equipment, such as Draeger tube air samplers to detect air contamination, and in the proper use of protective clothing and respiratory equipment. Protocols should also be defined stating when safety equipment should be employed and designating safe areas where facilities are available for washing, drinking, and eating.

Even when the utmost care is taken, an emergency situation can occur as a result of an unanticipated explosion, electrical hazard, fall, or exposure to a hazardous substance. To minimize the impact of an emergency, field personnel should be aware of basic first aid and have immediate access to a first-aid kit. Phone numbers for both police and the nearest hospital should be obtained and kept by each team member before entering the site. Directions to the nearest hospital should also be obtained so that anyone suffering an injury can be transported quickly for treatment.

9.2.2.7 Chain of Custody

An essential part of any sampling/analytical scheme is ensuring the integrity of the sample from collection to data reporting. The possession and handling of samples should be traceable from the time of collection through analysis and final disposition. This documentation of the history of the sample is referred to as chain of custody.

Chain of custody is necessary if there is <u>any</u> possibility that the analytical data or conclusions based upon analytical data will be used in litigation. In cases where litigation is not involved, many of the chain-of-custody procedures are still useful for routine control of sample flow. The components of chain of custody -- sample seals, a field logbook, chain-of-custody record, and sample analysis request sheet -- and the procedures for their use are described in this section.

A sample is considered is considered to be under a person's custody if it is (1) in a person's physical possession, (2) in view of the person after taking possession, and (3) secured by that person so that no one can tamper with it, or secured by that person in an area that is restricted to authorized personnel. A person who has samples in custody must comply with the following procedures.

(The material presented here briefly summarizes the major aspects of chain of custody. The reader is referred to NEIC Policies and Procedures, EPA-330/9/78/001-R [as revised 1/82], or other manual, as appropriate, for more information.)

Sample labels (Figure 9-16) are necessary to prevent misidentification of samples. Gummed paper labels or tags are adequate and should include at least the following information:

Sample number.
Name of collector.
Date and time of collection.
Place of collection.

Labels should be affixed to sample containers prior to or at the time of sampling and should be filled out at the time of collection.

Sample seals are used to detect unauthorized tampering of samples following sample collection up to the time of analysis. Gummed paper seals may be used for this purpose. The paper seal should include, minimally, the following information:

Sample number. (This number must be identical with the number on the sample label.)
Name of collector.
Date and time of sampling.
Place of collection.

The seal must be attached in such a way that it is necessary to break it in order to open the sample container. (An example of an official sample seal is shown in Figure 9-17.) Seals must be affixed to containers before the samples leave the custody of sampling personnel.

All information pertinent to a field survey or sampling must be recorded in a logbook. This should be bound, preferably with consecutively numbered pages that are 21.6 by 27.9 cm (8-1/2 by 11 in.). At a minimum, entries in the logbook must include the following:

Location of sampling point.
Name and address of field contact.
Producer of waste and address, if different from location.
Type of process producing waste (if known).
Type of waste (e.g., sludge, wastewater).
Suspected waste composition, including concentrations.
Number and volume of sample taken.

Collector _____ Sample No. _____

Place of Collection _____

_____

Date Sampled _____ Time Sampled _____

Field Information _____

_____

_____

Figure 9-16. Example of Sample Label

NAME AND ADDRESS OF ORGANIZATION COLLECTING SAMPLES

Person Collecting Sample _____ Sample No. _____
(signature)

Date Collected _____ Time Collected _____

Place Collected _____

_____

_____

Figure 9-17. Example of Official Sample Seal

Purpose of sampling (e.g., surveillance, contract number).
Description of sampling point and sampling methodology.
Date and time of collection.
Collector's sample identification number(s).
Sample distribution and how transported (e.g., name of laboratory, UPS, Federal Express).
References, such as maps or photographs of the sampling site.
Field observations.
Any field measurements made (e.g., pH, flammability, explosivity).
Signatures of personnel responsible for observations.

Sampling situations vary widely. No general rule can be given as to the extent of information that must be entered in the logbook. A good rule, however, is to record sufficient information so that anyone can reconstruct the sampling without reliance on the collector's memory. The logbook must be stored safely.

To establish the documentation necessary to trace sample possession from the time of collection, a chain-of-custody record should be filled out and should accompany every sample. This record becomes especially important if the sample is to be introduced as evidence in a court litigation. (A chain-of-custody record is illustrated in Figure 9-18.)

The record should contain, minimally, the following information:

Sample number.
Signature of collector.
Date and time of collection.
Place and address of collection.
Waste type.
Signature of persons involved in the chain of possession.
Inclusive dates of possession.

The sample analysis request sheet (Figure 9-19) is intended to accompany the sample on delivery to the laboratory. The field portion of this form is completed by the person collecting the sample and should include most of the pertinent information noted in the logbook. The laboratory portion of this form is intended to be completed by laboratory personnel and to include, minimally:

Name of person receiving the sample.
Laboratory sample number.
Date and time of sample receipt.
Sample allocation.
Analyses to be performed.

The sample should be delivered to the laboratory for analysis as soon as practicable -- usually within 1 or 2 days after sampling. The sample must be accompanied by the chain-of-custody record (Figure 9-18) and by a sample analysis request sheet (Figure 9-19). The sample must be delivered to the person in the laboratory authorized to receive samples (often referred to as the sample custodian).

CHAIN OF CUSTODY RECORD

Proj No.	Project Name												
Samplers (Signature)													
Sta. No.	Date	Time	Comp.	Grab	Station Location	No. of Containers							Remarks

Relinquished by: (Signature)	Date Time	Received by: (Signature)	Relinquished by: (Signature)	Date Time	Received by: (Signature)
Relinquished by: (Signature)	Date Time	Received by: (Signature)	Relinquished by: (Signature)	Date Time	Received by: (Signature)
Relinquished by: (Signature)	Date Time	Received for Laboratory by: (Signature)		Remarks	

Figure 9-18.

SAMPLING ANALYSIS REQUEST

Part I: Field Section _____

Collector _____ Date Sampled _____ Time _____ hours

Affiliation of Sampler _____

Address _____
number street city state zip

Telephone ( ) _____ Company Contact _____

LABORATORY SAMPLE NUMBER	COLLECTOR'S SAMPLE NO.	TYPE OF SAMPLE*	FIELD INFORMATION**

Analysis Requested _____

_____

_____

Special Handling and/or Storage _____

_____

PART II: LABORATORY SECTION** _____

Received by _____ Title _____ Date _____

Analysis Required _____

_____

* Indicate whether sample is soil, sludge, etc.
**Use back of page for additional information relative to sample location.

Figure 9-19. Example of hazardous waste sample analysis sheet.

Any material that is identified in the DOT Hazardous Material Table (49 CFR 172.101) must be transported as prescribed in the table. All other hazardous waste samples must be transported as follows:

1. Collect sample in a 16-oz or smaller glass or polyethylene container with nonmetallic Teflon-lined screw cap. For liquids, allow sufficient air space (approximately 10% by volume) so that the container is not full at 54°C (130°F). If collecting a solid material, the container plus contents should not exceed 1 lb net weight. If sampling for volatile organic analysis, fill VOA container to septum but place the VOA container inside a 16-oz or smaller container so that the required air space may be provided. Large quantities, up to 3.785 liters (1 gal), may be collected if the sample's flash point is 23°C (75°F) or higher. In this case, the flash point must be marked on the outside container (e.g., carton or cooler), and shipping papers should state that "Flash point is 73°F or higher."

2. Seal sample and place in a 4-mil-thick polyethylene bag, one sample per bag.

3. Place sealed bag inside a metal can with noncombustible, absorbent cushioning material (e.g., vermiculite or earth) to prevent breakage, one bag per can. Pressure-close the can and use clips, tape, or other positive means to hold the lid securely.

4. Mark the can with:

   Name and address of originator.
   "Flammable Liquid, N.O.S. UN 1993."
   (or, "Flammable Solid, N.O.S. UN 1325".)

NOTE: UN numbers are now required in proper shipping names.

---

5. Place one or more metal cans in a strong outside container such as a picnic cooler or fiberboard box. Preservatives are not used for hazardous waste site samples.

6. Prepare for shipping: The words "Flammable Liquid, N.O.S. UN 1993" or "Flammable Solid, N.O.S. UN 1325"; "Cargo Aircraft Only" (if more than 1 qt net per outside package); "Limited Quantity" or "Ltd. Qty."; "Laboratory Samples"; "Net Weight ___" or "Net Volume ___" (of hazardous contents) should be indicated on shipping papers and on the outside of the outside shipping container. The words "This Side Up" or "This End Up" should also be on container. Sign the shipper certification.

7. Stand by for possible carrier requests to open outside containers for inspection or to modify packaging. (It is wise to contact carrier before packing to ascertain local packaging requirements.) Remain in the departure area until the carrier vehicle (aircraft, truck, etc.) is on its way.

At the laboratory, a sample custodian should be assigned to receive the samples. Upon receipt of a sample, the custodian should inspect the condition of the sample and the sample seal, reconcile the information on the sample label and seal against that on the chain-of-custody record, assign a laboratory number, log in the sample in the laboratory logbook, and store it in a secured sample storage room or cabinet until it is assigned to an analyst for analysis.

The sample custodian should inspect the sample for any leakage from the container. A leaky container containing a multiphase sample should not be accepted for analysis. This sample will no longer be a representative sample. If the sample is contained in a plastic bottle and the container walls show that the sample is under pressure or releasing gases, the sample should be treated with caution because it may be explosive or release extremely poisonous gases. The custodian should examine whether the sample seal is intact or broken, because a broken seal may mean sample tampering and would make analysis results inadmissible as evidence in court. Any discrepancies between the information on the sample label and seal and the information that is on the chain-of-custody record and the sample analysis request sheet should be resolved before the sample is assigned for analysis. This effort might require communication with the sample collector. Results of the inspection should be noted on the sample analysis request sheet and on the laboratory sample logbook.

Incoming samples usually carry the inspector's or collector's identification numbers. To identify these samples further, the laboratory should assign its own identification numbers, which normally are given consecutively. Each sample should be marked with the assigned laboratory number. This number is correspondingly recorded on a laboratory sample log book along with the information describing the sample. The sample information is copied from the sample analysis request sheet and cross-checked against that on the sample label.

In most cases, the laboratory supervisor assigns the sample for analysis. The supervisor should review the information on the sample analysis request sheet, which now includes inspection notes recorded by the laboratory sample custodian. The technician assigned to analysis should record in the laboratory notebook the identifying information about the sample, the date of receipt, and other pertinent information. This record should also include the subsequent testing data and calculations. The sample may have to be split with other laboratories in order to obtain all the necessary analytical information. In this case, the same type of chain-of-custody procedures must be employed while the sample is being transported and at the other laboratory.

Once the sample has been received in the laboratory, the supervisor or his/her assignee is responsible for its care and custody. That person should be prepared to testify that the sample was in his/her possession or secured in the laboratory at all times, from the moment it was received from the custodian until the analyses were performed.

9.2.3 Sample Plan Implementation

Prior to implementing a sampling plan, it is often strategic to walk through the sampling plan mentally, starting with the preparation of equipment until the time when samples are received at the laboratory. This mental excursion should be in as much detail as can be imagined, because the small details are the ones most frequently overlooked. By employing this technique, items not included on the equipment list may be discovered, as well as any major oversight that could cause the sampling effort to fail. During this review of the sampling plan, an attempt should be made to anticipate what could go wrong. A solution to anticipated problems should be found, and, if necessary, materials needed for solving these problems should be added to the equipment list.

The remainder of this section discusses examples of sampling strategies for different situations that may be encountered.

Containers

Prior to discussing the sampling of containers, the term must be defined. The term container, as used here, refers to receptacles that are designed for transporting materials, e.g., drums and other smaller receptacles, as opposed to stationary tanks. Weighted bottles, Coliwasas, drum thiefs, or triers are the sampling devices that are chosen for the sampling of containers. (See Section 9.2.2.4 for a full discussion of sampling equipment.)

The sampling strategy for containers varies according to (1) the number of containers to be sampled and (2) access to the containers. Ideally, if the waste is contained in several containers, every container will be sampled. If this is not possible due to the large number of containers or to cost factors, a subset of individual containers must be randomly selected for sampling. This can be done by assigning each container a number and then randomly choosing a set of numbers for sampling.

Access to a container will affect the number of samples that can be taken from the container and the location within the container from which samples can be taken. Ideally, several samples should be taken from locations displaced both vertically and horizontally throughout the waste. The number of samples required for reliable sampling will vary depending on the distribution of the waste components in the container. At a minimum with an unknown waste, a sufficient number and distribution of samples should be taken to address any possible vertical anomalies in the waste. This is because contained wastes have a much greater tendency to be nonrandomly heterogeneous in a vertical rather than a horizontal direction due to (1) settling of solids and the denser phases of liquids and (2) variation in the content of the waste as it enters the container. Bags, paper drums, and open-headed steel drums (of which the entire top can be removed) generally do not restrict access to the waste and therefore do not limit sampling.

When access to a container is unlimited, a useful strategy for obtaining a representative set of samples is a three-dimensional simple random sampling strategy in which the container is divided by constructing an imaginary three-dimensional grid (see Figure 9-20), as follows. First, the top surface of the waste is divided into a grid whose sections either approximate the size of the sampling device or are larger than the sampling device if the container is large. (Cylindrical containers can be divided into imaginary concentric circles, which are then further divided into grids of equal size.) Each section is assigned a number. The height of the container is then divided into imaginary levels that are at least as large as the vertical space required by the chosen sampling device. These imaginary levels are then assigned numbers. Specific levels and grid locations are then selected for sampling using a random-number table or random-number generator. (An alternative means of choosing random sampling locations using circumference and diameter dimensions is discussed in Section 9.2.2.1.)

Another appropriate sampling approach is the two-dimensional simple random sampling strategy, which can usually yield a more precise sampling when fewer samples are collected. This strategy involves (1) dividing the top surface of the waste into an imaginary grid as in the three-dimensional strategy, (2) selecting grid sections for sampling using random-number tables or random-number generators, and (3) sampling each selected grid point in a vertical manner along the entire length from top to bottom using a sampling device such as a drum thief or Coliwasa.

Some containers, such as drums with bung openings, limit access to the contained waste and restrict sampling to a single vertical plane. Samples taken in this manner can be considered representative of the entire container only if the waste is known to be homogeneous or if no horizontal stratification has occurred. Precautions must be taken when sampling any type of steel drum because the drum may explode or expel gases and/or pressurized liquids. An EPA/NEIC manual, "Safety Manual for Hazardous Waste Site Investigation," addresses these safety precautions.

Tanks

Tanks are essentially large containers. The considerations involved in sampling tanks are therefore similar to those for sampling containers. As with containers, the goal of sampling tanks is to acquire a sufficient number of samples from different locations within the waste to provide analytical data that are representative of the entire tank contents.

The accessibility of the tank contents will affect the sampling methodology. If the tank is an open one, allowing unrestricted access, then usually a representative set of samples is best obtained using the three-dimensional simple random sampling strategy, as described for containers (see also Section 9.2.2.1). This strategy involves dividing the tank contents into an imaginary three-dimensional grid. As a first step, the top surface of the waste is divided into a grid whose sections either approximate the size of the sampling device or are larger than the sampling device if the tank is large.

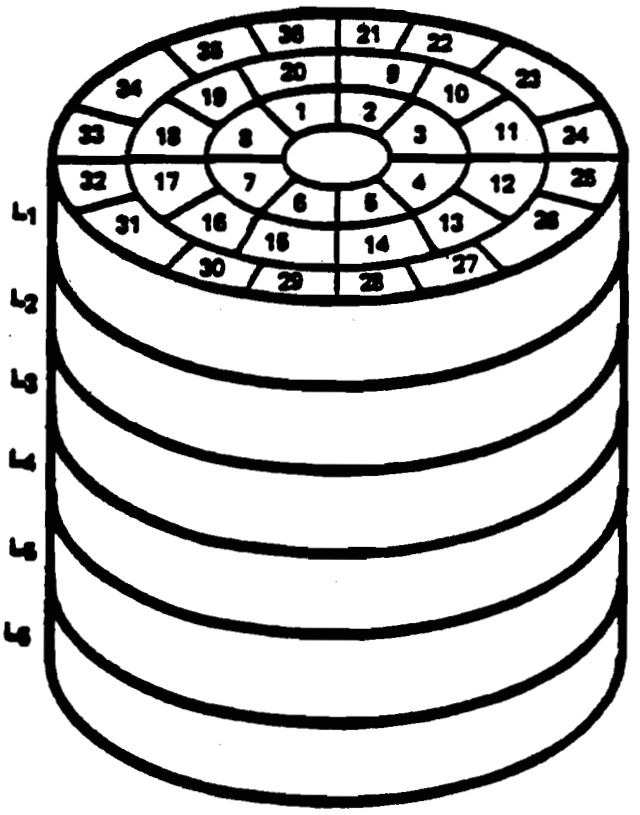

Figure 9-20. Container divided into an imaginary three-dimensional grid.

(Cylindrical tanks can be divided into imaginary concentric circles, which are then further divided into grids of equal size.) Each section is assigned a number. The height of the tank is then divided into imaginary levels that are at least as large as the vertical space required by the chosen sampling device. These imaginary levels are assigned numbers. Specific levels and grid locations are then selected for sampling using a random-number table or random-number generator.

A less comprehensive sampling approach may be appropriate if information regarding the distribution of waste components is known or assumed (e.g., if vertical compositing will yield a representative sample). In such cases, a two-dimensional simple random sampling strategy may be appropriate. In this strategy, the top surface of the waste is divided into an imaginary grid; grid sections are selected using random-number tables or random-number generators; and each selected grid point is then sampled in a vertical manner along the entire length from top to bottom using a sampling device such as a weighted bottle, a drum thief, or Coliwasa. If the waste is known to consist of two or more discrete strata, a more precise representation of the tank contents can be obtained by using a stratified random sampling strategy, i.e., by sampling each stratum separately using the two- or three-dimensional simple random sampling strategy.

Some tanks permit only limited access to their contents, which restricts the locations within the tank from which samples can be taken. If sampling is restricted, the sampling strategy must, at a minimum, take sufficient samples to address the potential vertical anomalies in the waste in order to be considered representative. This is because contained wastes tend to display vertical, rather than horizontal, nonrandom heterogeneity due to settling of suspended solids or denser liquid phases. If access restricts sampling to a portion of the tank contents (e.g., in an open tank, the size of the tank may restrict sampling to the perimeter of the tank; in a closed tank, the only access to the waste may be through inspection ports), then the resulting analytical data will be deemed representative only of the accessed area, not of the entire tank contents unless the tank contents are known to be homogeneous.

If a limited access tank is to be sampled, and little is known about the distribution of components within the waste, a set of samples that is representative of the entire tank contents can be obtained by taking a series of samples as the tank contents are being drained. This should be done in a simple random manner by estimating how long it will take to drain the tank and then randomly selecting times during drainage for sampling.

The most appropriate type of sampling device for tanks depends on the tank parameters. In general, subsurface samplers (i.e., pond samplers) are used for shallow tanks, and weighted bottles are usually employed for tanks deeper than 5 ft. Dippers are useful for sampling pipe effluents.

Waste Piles

In waste piles, the accessibility of waste for sampling is usually a function of pile size, a key factor in the design of a sampling strategy for a waste pile. Ideally, piles containing unknown wastes should be sampled using a three-dimensional simple random sampling strategy. This strategy can be employed only if all points within the pile can be accessed. In such cases, the pile should be divided into a three-dimensional grid system, the grid sections assigned numbers, and the sampling points then chosen using random-number tables or random-number generators.

If sampling is limited to certain portions of the pile, then the collected sample will be representative only of those portions, unless the waste is known to be homogeneous.

In cases where the size of a pile impedes access to the waste, a set of samples that are representative of the entire pile can be obtained with a minimum of effort by scheduling sampling to coincide with pile removal. The number of truckloads needed to remove the pile should be estimated and the truckloads randomly chosen for sampling.

The sampling devices most commonly used for small piles are thiefs, triers, and shovels. Excavation equipment, such as backhoes, can be useful for sampling medium-sized piles.

Landfills and Lagoons

Landfills contain primarily solid waste, whereas lagooned waste may range from liquids to dried sludge residues. Lagooned waste that is either liquid or semisolid is often best sampled using the methods recommended for large tanks. Usually, solid wastes contained in a landfill or lagoon are best sampled using the three-dimensional random sampling strategy.

The three-dimensional random sampling strategy involves establishing an imaginary three-dimensional grid of sampling points in the waste and then using random-number tables or random-number generators to select points for sampling. In the case of landfills and lagoons, the grid is established using a survey or map of the area. The map is divided into two two-dimensional grids with sections of equal size. (An alternative way of choosing random sampling locations is presented in the second example described in Section 9.2.2.1.) These sections are then assigned numbers sequentially.

Next, the depth to which sampling will take place is determined and subdivided into equal levels, which are also sequentially numbered. (The lowest sampling depth will vary from landfill to landfill. Usually, sampling extends to the interface of the fill and the natural soils. If soil contamination is suspected, sampling may extend into the natural soil.) The horizontal and vertical sampling coordinates are then selected using random-number tables or random-number generators. If some information is known about the nature of the waste, then a modified three-dimensional strategy may be more appropriate. For example, if the landfill consists of several cells, a more precise measurement may be obtained by considering each cell as a stratum and employing a stratified three-dimensional random sampling strategy (see Section 9.1).

Hollow-stem augers combined with split-spoon samplers are frequently appropriate for sampling landfills. Water-driven or water-rinsed coring equipment should not be used for sampling because the water can rinse chemical components from the sample. Excavation equipment, such as backhoes, may be useful in obtaining samples at various depths; the resulting holes may be useful for viewing and recording the contents of the landfill.

9.2.4 Sample Compositing

The compositing of samples, is usually done for cost-saving reasons, involves the combining of a number of samples or aliquots of a number of samples collected from the same waste. The disadvantage of sample compositing is the loss of concentration variance data, whereas the advantage is that, for a given analytical cost, a more representative (i.e., more accurate) sample is obtained.

It is usually most expedient and cost effective to collect component samples in the field and to composite aliquots of each sample later in the laboratory. Then, if after reviewing the data any questions arise, the samples can be recomposited in a different combination, or each component sample can be analyzed separately to determine better the variation of waste composition over time and space, or to determine better the precision of an average number. The fact that this recompositing of samples can occur without the need to resample often results in a substantial cost savings.

To ensure that recompositing can be done at a later date, it is essential to collect enough sample volume in the field so that, under normal circumstances, enough component sample will remain following compositing to allow for a different compositing scheme or even for an analysis of the component samples themselves.

The actual compositing of samples requires the homogenization of all component samples to ensure that a representative subsample is aliquoted. The homogenization procedure, and the containers and equipment used for compositing, will vary according to the type of waste being composited and the parameters to be measured. Likewise, the composite sample itself will be homogenized prior to the subsampling of analytical aliquots.

9.2.5 References

1. Corey, P.R., Soil Water Monitoring, Unpublished Report to Dept. of Agr. Eng., Colorado State University, Fort Collins, Colorado, 1974.

2. Duke, H.R. and H.R. Haise, Vacuum Extractors to Assess Deep Percolation Losses and Chemical Constituents of Soil Water, Soil Sci. Soc. Am. Proc. 37, 963-4 (1973).

3. Parizek, R.R. and B.E. Lane, Soil-Water Sampling Using Pan and Deep Pressure-Vacuum Lysimeters, J. Hydr. 11, 1-21 (1970).

4. Silkworth, D.R. and D.F. Grigal, Field Comparison of Soil Solution Samplers, Soil Sci. Soc. Am. J. 45, 440-442 (1981).

5. Trout, T.J., J.L. Smith, and D.B. McWhorter, Environmental Effects of Land Application of Digested Municipal Sewage Sludge, Report submitted to City of Boulder, Colorado, Dept. of Agr. Engr., Colorado State Univ., Fort Collins, Colorado, 1975.

6. Tyler, D.D. and G.W. Thomas, Lysimeter Measurements of Nitrate and Chloride Losses and No-tillage Corn, J. Environ. Qual. 6, 63-66 (1977).

7. U.S. Department of Transportation, Hazardous Materials Table, 49 CFR 172.101.

8. U.S. EPA, Office of Solid Waste amd Emergency Response, Hazardous Waste Land Treatment, Washington, D.C., SW-874, 1983.

9. U.S. EPA, NEIC Policies and Procedures, 330/9/78/001-R, 1982.

10. Wood, W.W., A Technique Using Porous Cups for Water Sampling at Any Depth in the Unsaturated Zone, Water Resources Research 9, 486-488 (1973).

CHAPTER TEN

SAMPLING METHODS

Methods appropriate for use in field sampling situations are included in this chapter. It contains complete sampling methods for a specific purpose. Chapter Nine contains general sampling techniques and plans.

METHOD 0010

MODIFIED METHOD 5 SAMPLING TRAIN

1.0 SCOPE AND APPLICATION

1.1 This method is applicable to the determination of Destruction and Removal Efficiency (DRE) of semivolatile Principal Organic Hazardous Compounds (POHCs) from incineration systems (PHS, 1967). This method also may be used to determine particulate emission rates from stationary sources as per EPA Method 5 (see References at end of this method).

2.0 SUMMARY OF METHOD

2.1 Gaseous and particulate pollutants are withdrawn from an emission source at an isokinetic sampling rate and are collected in a multicomponent sampling train. Principal components of the train include a high-efficiency glass- or quartz-fiber filter and a packed bed of porous polymeric adsorbent resin. The filter is used to collect organic-laden particulate materials and the porous polymeric resin to adsorb semivolatile organic species. Semivolatile species are defined as compounds with boiling points >100°C.

2.2 Comprehensive chemical analyses of the collected sample are conducted to determine the concentration and identity of the organic materials.

3.0 INTERFERENCES

3.1 Oxides of nitrogen (NO_x) are possible interferents in the determination of certain water-soluble compounds such as dioxane, phenol, and urethane; reaction of these compounds with NO_x in the presence of moisture will reduce their concentration. Other possibilities that could result in positive or negative bias are (1) stability of the compounds in methylene chloride, (2) the formation of water-soluble organic salts on the resin in the presence of moisture, and (3) the solvent extraction efficiency of water-soluble compounds from aqueous media. Use of two or more ions per compound for qualitative and quantitative analysis can overcome interference at one mass. These concerns should be addressed on a compound-by-compound basis before using this method.

4.0 APPARATUS AND MATERIALS

4.1 Sampling train:

4.1.1 A schematic of the sampling train used in this method is shown in Figure 1. This sampling train configuration is adapted from EPA Method 5 procedures, and, as such, the majority of the required equipment

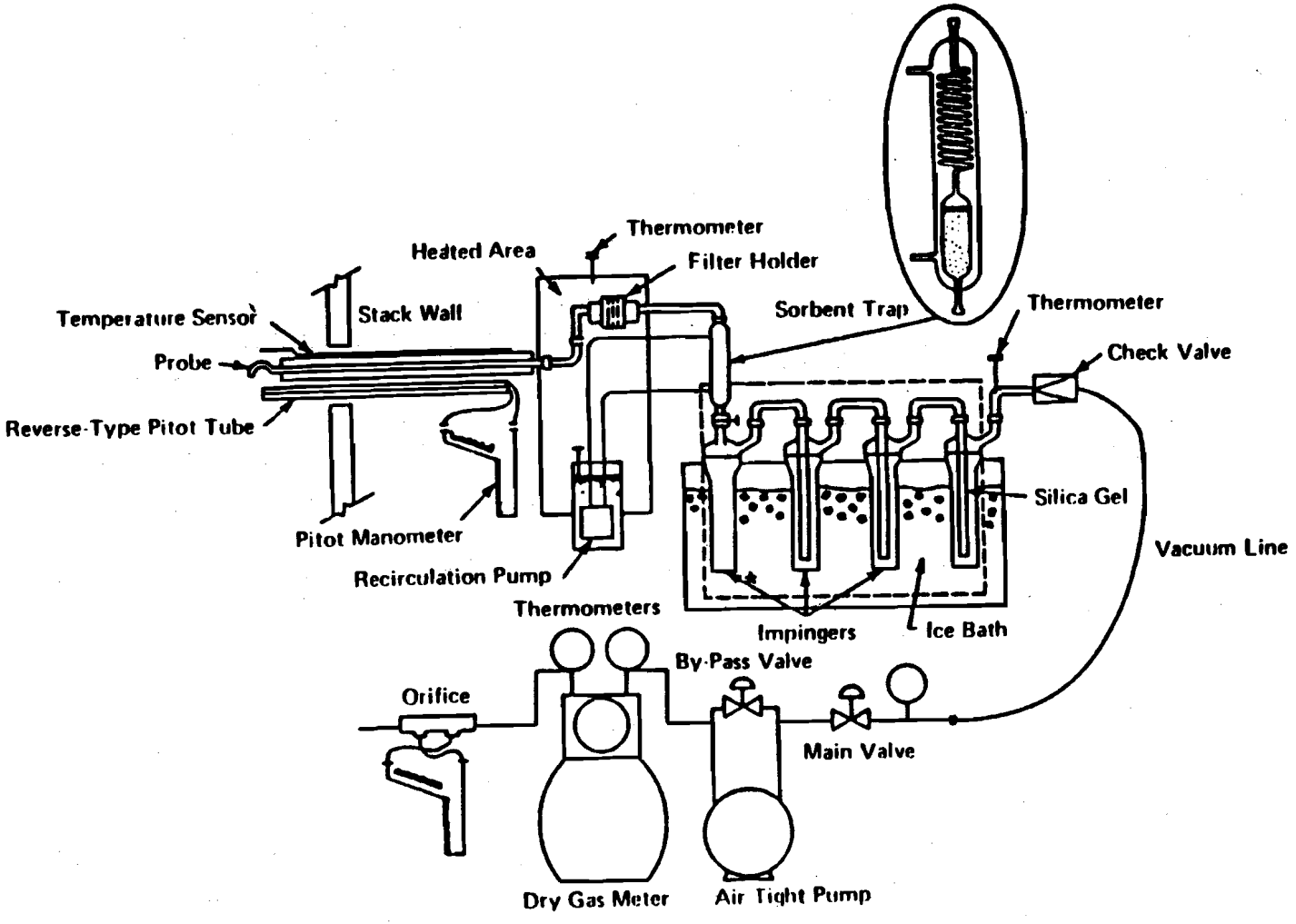

Figure 1. Modified Method 5 Sampling Train.

is identical to that used in EPA Method 5 determinations. The new components required are a condenser coil and a sorbent module, which are used to collect semivolatile organic materials that pass through the glass- or quartz-fiber filter in the gas phase.

4.1.2 Construction details for the basic train components are given in APTD-0581 (see Martin, 1971, in Section 13.0, References); commercial models of this equipment are also available. Specifications for the sorbent module are provided in the following subsections. Additionally, the following subsections list changes to APTD-0581 and identify allowable train configuration modifications.

4.1.3 Basic operating and maintenance procedures for the sampling train are described in APTD-0576 (see Rom, 1972, in Section 13.0, References). As correct usage is important in obtaining valid results, all users should refer to APTD-0576 and adopt the operating and maintenance procedures outlined therein unless otherwise specified. The sampling train consists of the components detailed below.

4.1.3.1 Probe nozzle: Stainless steel (316) or glass with sharp, tapered (30° angle) leading edge. The taper shall be on the outside to preserve a constant I.D. The nozzle shall be buttonhook or elbow design and constructed from seamless tubing (if made of stainless steel). Other construction materials may be considered for particular applications. A range of nozzle sizes suitable for isokinetic sampling should be available in increments of 0.16 cm (1/16 in.), e.g., 0.32-1.27 cm (1/8-1/2 in.), or larger if higher volume sampling trains are used. Each nozzle shall be calibrated according to the procedures outlined in Paragraph 9.1.

4.1.3.2 Probe liner: Borosilicate or quartz-glass tubing with a heating system capable of maintaining a gas temperature of 120 ± 14°C (248 ± 25°F) at the exit end during sampling. (The tester may opt to operate the equipment at a temperature lower than that specified.) Because the actual temperature at the outlet of the probe is not usually monitored during sampling, probes constructed according to APTD-0581 and utilizing the calibration curves of APTD-0576 (or calibrated according to the procedure outlined in APTD-0576) are considered acceptable. Either borosilicate or quartz-glass probe liners may be used for stack temperatures up to about 480°C (900°F). Quartz liners shall be used for temperatures between 480 and 900°C (900 and 1650°F). (The softening temperature for borosilicate is 820°C (1508°F), and for quartz 1500°C (2732°F).) Water-cooling of the stainless steel sheath will be necessary at temperatures approaching and exceeding 500°C.

4.1.3.3 Pitot tube: Type S, as described in Section 2.1 of EPA Method 2, or other appropriate devices (Vollaro, 1976). The pitot tube shall be attached to the probe to allow constant monitoring of the stack-gas velocity. The impact (high-pressure) opening plane of the pitot tube shall be even with or above the nozzle entry plane (see EPA Method 2, Figure 2-6b) during sampling. The Type S pitot tube assembly shall have a known coefficient, determined as outlined in Section 4 of EPA Method 2.

4.1.3.4 Differential pressure gauge: Inclined manometer or equivalent device as described in Section 2.2 of EPA Method 2. One manometer shall be used for velocity-head (ΔP) readings and the other for orifice differential pressure (ΔH) readings.

4.1.3.5 Filter holder: Borosilicate glass, with a glass frit filter support and a sealing gasket. The sealing gasket should be made of materials that will not introduce organic material into the gas stream at the temperature at which the filter holder will be maintained. The gasket shall be constructed of Teflon or materials of equal or better characteristics. The holder design shall provide a positive seal against leakage at any point along the filter circumference. The holder shall be attached immediately to the outlet of the cyclone or cyclone bypass.

4.1.3.6 Filter heating system: Any heating system capable of maintaining a temperature of 120 ± 14°C (248 ± 25°F) around the filter holder during sampling. Other temperatures may be appropriate for particular applications. Alternatively, the tester may opt to operate the equipment at temperatures other than that specified. A temperature gauge capable of measuring temperature to within 3°C (5.4°F) shall be installed so that the temperature around the filter holder can be regulated and monitored during sampling. Heating systems other than the one shown in APTD-0581 may be used.

4.1.3.7 Organic sampling module: This unit consists of three sections, including a gas-conditioning section, a sorbent trap, and a condensate knockout trap. The gas-conditioning system shall be capable of conditioning the gas leaving the back half of the filter holder to a temperature not exceeding 20°C (68°F). The sorbent trap shall be sized to contain approximately 20 g of porous polymeric resin (Rohm and Haas XAD-2 or equivalent) and shall be jacketed to maintain the internal gas temperature at 17 ± 3°C (62.5 ± 5.4°F). The most commonly used coolant is ice water from the impinger ice-water bath, constantly circulated through the outer jacket, using rubber or plastic tubing and a peristaltic pump. The sorbent trap should be outfitted with a glass well or depression, appropriately sized to accommodate a small thermocouple in the trap for monitoring the gas entry temperature. The condensate knockout trap shall be of sufficient size to collect the condensate following gas conditioning. The organic module components shall be oriented to direct the flow of condensate formed vertically downward from the conditioning section, through the adsorbent media, and into the condensate knockout trap. The knockout trap is usually similar in appearance to an empty impinger directly underneath the sorbent module; it may be oversized but should have a shortened center stem (at a minimum, one-half the length of the normal impinger stems) to collect a large volume of condensate without bubbling and overflowing into the impinger train. All surfaces of the organic module wetted by the gas sample shall be fabricated of borosilicate glass, Teflon, or other inert materials. Commercial versions of the

complete organic module are not currently available, but may be assembled from commercially available laboratory glassware and a custom-fabricated sorbent trap. Details of two acceptable designs are shown in Figures 2 and 3 (the thermocouple well is shown in Figure 2).

4.1.3.8 Impinger train: To determine the stack-gas moisture content, four 500-mL impingers, connected in series with leak-free ground-glass joints, follow the knockout trap. The first, third, and fourth impingers shall be of the Greenburg-Smith design, modified by replacing the tip with a 1.3-cm (1/2-in.) I.D. glass tube extending about 1.3 cm (1/2 in.) from the bottom of the outer cylinder. The second impinger shall be of the Greenburg-Smith design with the standard tip. The first and second impingers shall contain known quantities of water or appropriate trapping solution. The third shall be empty or charged with a caustic solution, should the stack gas contain hydrochloric acid (HCl). The fourth shall contain a known weight of silica gel or equivalent desiccant.

4.1.3.9 Metering system: The necessary components are a vacuum gauge, leak-free pump, thermometers capable of measuring temperature to within 3°C (5.4°F), dry-gas meter capable of measuring volume to within 1%, and related equipment, as shown in Figure 1. At a minimum, the pump should be capable of 4 cfm free flow, and the dry-gas meter should have a recording capacity of 0-999.9 cu ft with a resolution of 0.005 cu ft. Other metering systems capable of maintaining sampling rates within 10% of isokineticity and of determining sample volumes to within 2% may be used. The metering system must be used in conjunction with a pitot tube to enable checks of isokinetic sampling rates. Sampling trains using metering systems designed for flow rates higher than those described in APTD-0581 and APTD-0576 may be used, provided that the specifications of this method are met.

4.1.3.10 Barometer: Mercury, aneroid, or other barometer capable of measuring atmospheric pressure to within 2.5 mm Hg (0.1 in. Hg). In many cases the barometric reading may be obtained from a nearby National Weather Service station, in which case the station value (which is the absolute barometric pressure) is requested and an adjustment for elevation differences between the weather station and sampling point is applied at a rate of minus 2.5 mm Hg (0.1 in. Hg) per 30-m (100 ft) elevation increase (vice versa for elevation decrease).

4.1.3.11 Gas density determination equipment: Temperature sensor and pressure gauge (as described in Sections 2.3 and 2.4 of EPA Method 2), and gas analyzer, if necessary (as described in EPA Method 3). The temperature sensor ideally should be permanently attached to the pitot tube or sampling probe in a fixed configuration such that the tip of the sensor extends beyond the leading edge of the probe sheath and does not touch any metal.

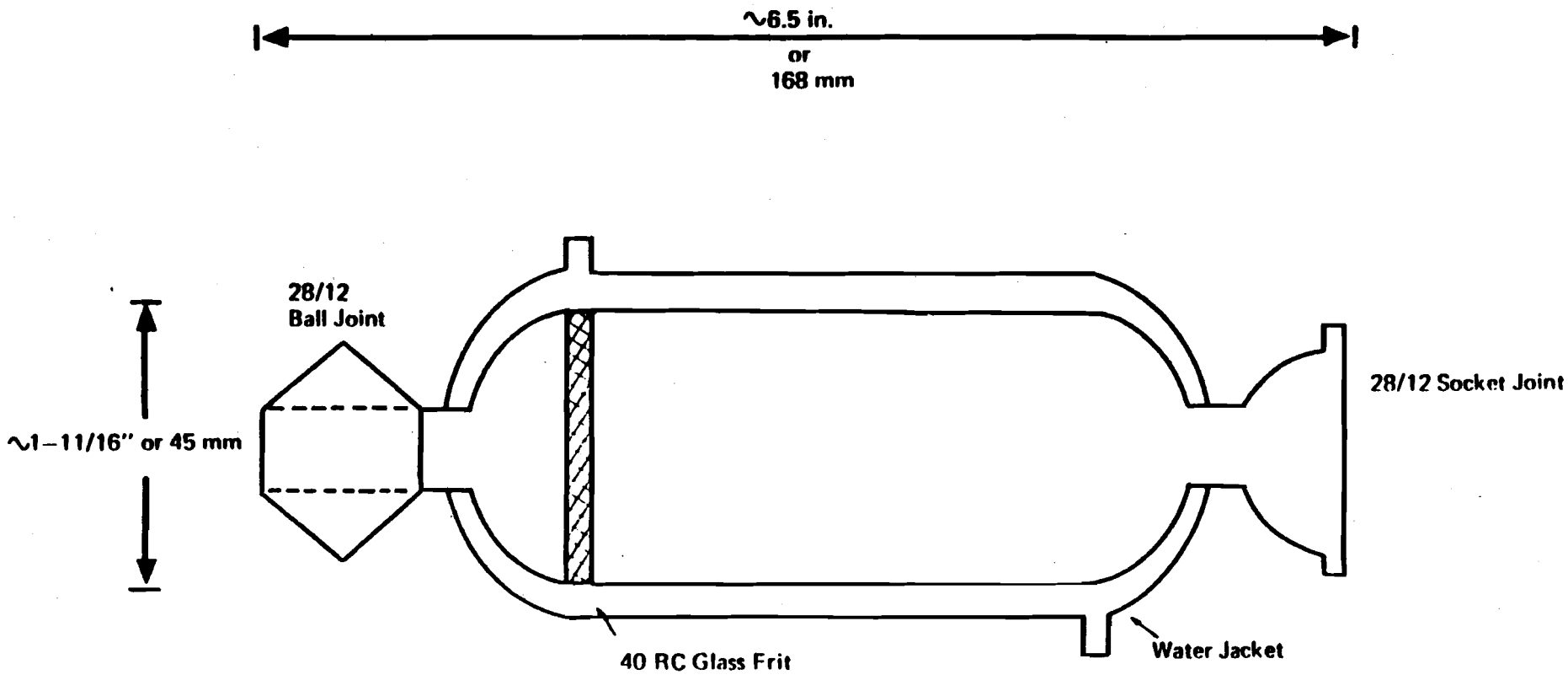

Figure 2. Adsorbent Sampling System.

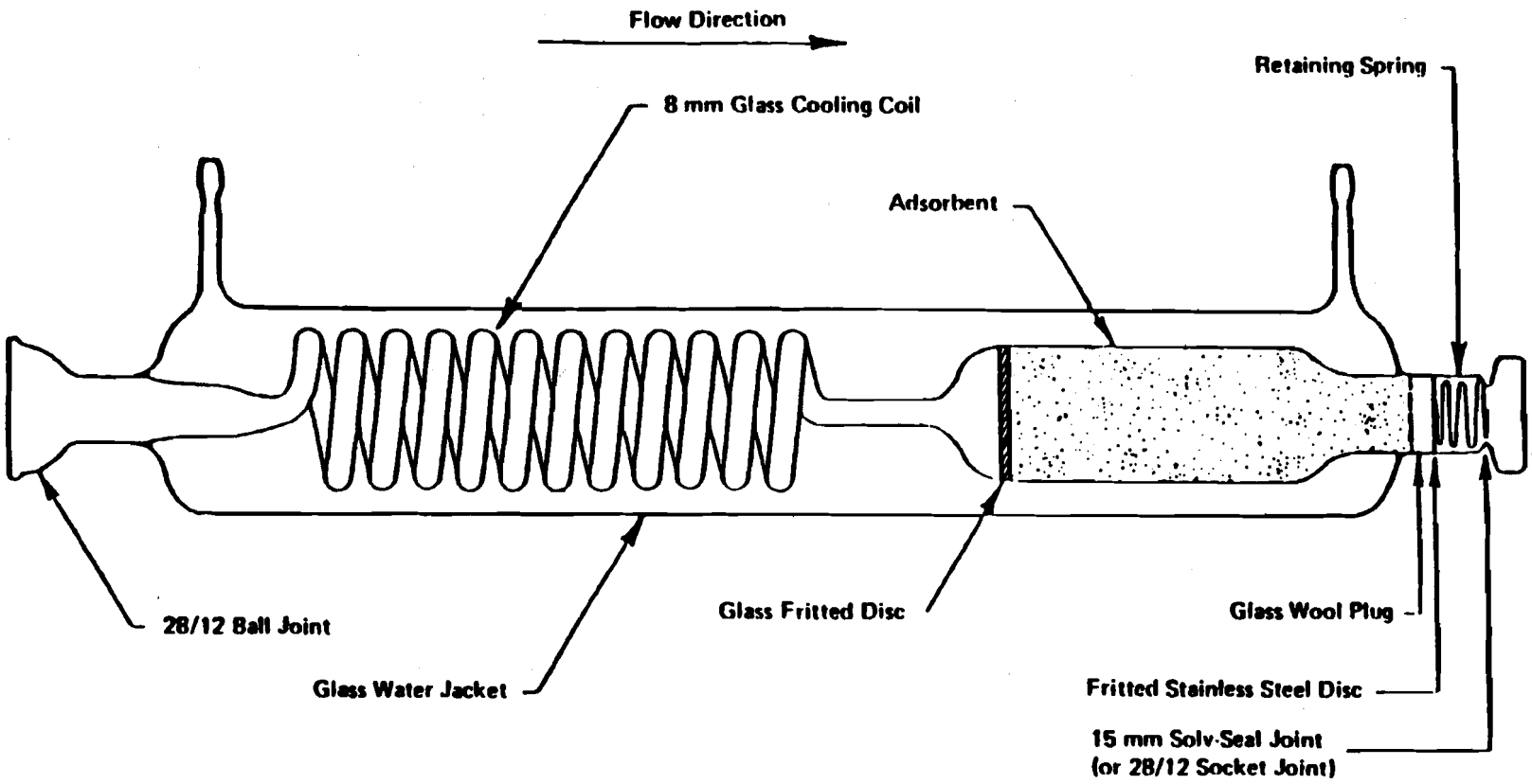

Figure 3. Adsorbent Sampling System.

Alternatively, the sensor may be attached just prior to use in the field. Note, however, that if the temperature sensor is attached in the field, the sensor must be placed in an interference-free arrangement with respect to the Type S pitot tube openings (see EPA Method 2, Figure 2-7). As a second alternative, if a difference of no more than 1% in the average velocity measurement is to be introduced, the temperature gauge need not be attached to the probe or pitot tube.

4.1.3.12 Calibration/field-preparation record: A permanently bound laboratory notebook, in which duplicate copies of data may be made as they are being recorded, is required for documenting and recording calibrations and preparation procedures (i.e., filter and silica gel tare weights, clean XAD-2, quality assurance/quality control check results, dry-gas meter, and thermocouple calibrations, etc.). The duplicate copies should be detachable and should be stored separately in the test program archives.

4.2 Sample Recovery:

4.2.1 **Probe liner:** Probe nozzle and organic module conditioning section brushes; nylon bristle brushes with stainless steel wire handles are required. The probe brush shall have extensions of stainless steel, Teflon, or inert material at least as long as the probe. The brushes shall be properly sized and shaped to brush out the probe liner, the probe nozzle, and the organic module conditioning section.

4.2.2 **Wash bottles:** Three. Teflon or glass wash bottles are recommended; polyethylene wash bottles should not be used because organic contaminants may be extracted by exposure to organic solvents used for sample recovery.

4.2.3 **Glass sample storage containers:** Chemically resistant, borosilicate amber and clear glass bottles, 500-mL or 1,000-mL. Bottles should be tinted to prevent action of light on sample. Screw-cap liners shall be either Teflon or constructed so as to be leak-free and resistant to chemical attack by organic recovery solvents. Narrow-mouth glass bottles have been found to exhibit less tendency toward leakage.

4.2.4 **Petri dishes:** Glass, sealed around the circumference with wide (1-in.) Teflon tape, for storage and transport of filter samples.

4.2.5 **Graduated cylinder and/or balances:** To measure condensed water to the nearest 1 mL or 1 g. Graduated cylinders shall have subdivisions not >2 mL. Laboratory triple-beam balances capable of weighing to ± 0.5 g or better are required.

4.2.6 **Plastic storage containers:** Screw-cap polypropylene or polyethylene containers to store silica gel.

4.2.7 **Funnel and rubber policeman:** To aid in transfer of silica gel to container (not necessary if silica gel is weighed in field).

4.2.8 Funnels: Glass, to aid in sample recovery.

4.3 Filters: Glass- or quartz-fiber filters, without organic binder, exhibiting at least 99.95% efficiency (<0.05% penetration) on 0.3-um dioctyl phthalate smoke particles. The filter efficiency test shall be conducted in accordance with ASTM standard method D2986-71. Test data from the supplier's quality control program are sufficient for this purpose. In sources containing SO_2 or SO_3, the filter material must be of a type that is unreactive to SO_2 or SO_3. Reeve Angel 934 AH or Schleicher and Schwell #3 filters work well under these conditions.

4.4 Crushed ice: Quantities ranging from 10-50 lb may be necessary during a sampling run, depending on ambient air temperature.

4.5 Stopcock grease: Solvent-insoluble, heat-stable silicone grease. Use of silicone grease upstream of the module is not permitted, and amounts used on components located downstream of the organic module shall be minimized. Silicone grease usage is not necessary if screw-on connectors and Teflon sleeves or ground-glass joints are used.

4.6 Glass wool: Used to plug the unfritted end of the sorbent module. The glass-wool fiber should be solvent-extracted with methylene chloride in a Soxhlet extractor for 12 hr and air-dried prior to use.

5.0 REAGENTS

5.1 Adsorbent resin: Porous polymeric resin (XAD-2 or equivalent) is recommended. These resins shall be cleaned prior to their use for sample collection. Appendix A of this method should be consulted to determine appropriate precleaning procedure. For best results, resin used should not exhibit a blank of higher than 4 mg/kg of total chromatographable organics (TCO) (see Appendix B) prior to use. Once cleaned, resin should be stored in an airtight, wide-mouth amber glass container with a Teflon-lined cap or placed in one of the glass sorbent modules tightly sealed with Teflon film and elastic bands. The resin should be used within 4 wk of the preparation.

5.2 Silica gel: Indicating type, 6-16 mesh. If previously used, dry at 175°C (350°F) for 2 hr before using. New silica gel may be used as received. Alternatively, other types of desiccants (equivalent or better) may be used, subject to the approval of the Administrator.

5.3 Impinger solutions: Distilled organic-free water (Type II) shall be used, unless sampling is intended to quantify a particular inorganic gaseous species. If sampling is intended to quantify the concentration of additional species, the impinger solution of choice shall be subject to Administrator approval. This water should be prescreened for any compounds of interest. One hundred mL will be added to the specified impinger; the third impinger in the train may be charged with a basic solution (1 N sodium hydroxide or sodium acetate) to protect the sampling pump from acidic gases. Sodium acetate should be used when large sample volumes are anticipated because sodium hydroxide will react with carbon dioxide in aqueous media to form sodium carbonate, which may possibly plug the impinger.

5.4 Sample recovery reagents:

5.4.1 **Methylene chloride:** Distilled-in-glass grade is required for sample recovery and cleanup (see Note to 5.4.2 below).

5.4.2 **Methyl alcohol:** Distilled-in-glass grade is required for sample recovery and cleanup.

NOTE: Organic solvents from metal containers may have a high residue blank and should not be used. Sometimes suppliers transfer solvents from metal to glass bottles; thus blanks shall be run prior to field use and only solvents with low blank value (<0.001%) shall be used.

5.4.3 **Water:** Water (Type II) shall be used for rinsing the organic module and condenser component.

6.0 SAMPLE COLLECTION, PRESERVATION, AND HANDLING

6.1 Because of complexity of this method, field personnel should be trained in and experienced with the test procedures in order to obtain reliable results.

6.2 Laboratory preparation:

6.2.1 All the components shall be maintained and calibrated according to the procedure described in APTD-0576, unless otherwise specified.

6.2.2 Weigh several 200- to 300-g portions of silica gel in airtight containers to the nearest 0.5 g. Record on each container the total weight of the silica gel plus containers. As an alternative to preweighing the silica gel, it may instead be weighed directly in the impinger or sampling holder just prior to train assembly.

6.2.3 Check filters visually against light for irregularities and flaws or pinhole leaks. Label the shipping containers (glass Petri dishes) and keep the filters in these containers at all times except during sampling and weighing.

6.2.4 Desiccate the filters at 20 ± 5.6°C (68 ± 10°F) and ambient pressure for at least 24 hr, and weigh at intervals of at least 6 hr to a constant weight (i.e., <0.5-mg change from previous weighing), recording results to the nearest 0.1 mg. During each weighing the filter must not be exposed for more than a 2-min period to the laboratory atmosphere and relative humidity above 50%. Alternatively (unless otherwise specified by the Administrator), the filters may be oven-dried at 105°C (220°F) for 2-3 hr, desiccated for 2 hr, and weighed.

6.3 Preliminary field determinations:

6.3.1 Select the sampling site and the minimum number of sampling points according to EPA Method 1 or as specified by the Administrator. Determine the stack pressure, temperature, and range of velocity heads using EPA Method 2. It is recommended that a leak-check of the pitot lines (see EPA Method 2, Section 3.1) be performed. Determine the stack-gas moisture content using EPA Approximation Method 4 or its alternatives to establish estimates of isokinetic sampling-rate settings. Determine the stack-gas dry molecular weight, as described in EPA Method 2, Section 3.6. If integrated EPA Method 3 sampling is used for molecular weight determination, the integrated bag sample shall be taken simultaneously with, and for the same total length of time as, the sample run.

6.3.2 Select a nozzle size based on the range of velocity heads so that it is not necessary to change the nozzle size in order to maintain isokinetic sampling rates. During the run, do not change the nozzle. Ensure that the proper differential pressure gauge is chosen for the range of velocity heads encountered (see Section 2.2 of EPA Method 2).

6.3.3 Select a suitable probe liner and probe length so that all traverse points can be sampled. For large stacks, to reduce the length of the probe, consider sampling from opposite sides of the stack.

6.3.4 A minimum of 3 dscm (105.9 dscf) of sample volume is required for the determination of the Destruction and Removal Efficiency (DRE) of POHCs from incineration systems. Additional sample volume shall be collected as necessitated by analytical detection limit constraints. To determine the minimum sample volume required, refer to sample calculations in Section 10.0.

6.3.5 Determine the total length of sampling time needed to obtain the identified minimum volume by comparing the anticipated average sampling rate with the volume requirement. Allocate the same time to all traverse points defined by EPA Method 1. To avoid timekeeping errors, the length of time sampled at each traverse point should be an integer or an integer plus one-half min.

6.3.6 In some circumstances (e.g., batch cycles) it may be necessary to sample for shorter times at the traverse points and to obtain smaller gas-sample volumes. In these cases, the Administrator's approval must first be obtained.

6.4 Preparation of collection train:

6.4.1 During preparation and assembly of the sampling train, keep all openings where contamination can occur covered with Teflon film or aluminum foil until just prior to assembly or until sampling is about to begin.

6.4.2 Fill the sorbent trap section of the organic module with approximately 20 g of clean adsorbent resin. While filling, ensure that the trap packs uniformly, to eliminate the possibility of channeling. When freshly cleaned, many adsorbent resins carry a static charge, which will cause clinging to trap walls. This may be minimized by filling the trap in the presence of an antistatic device. Commercial antistatic devices include Model-204 and Model-210 manufactured by the 3M Company, St. Paul, Minnesota.

6.4.3 If an impinger train is used to collect moisture, place 100 mL of water in each of the first two impingers, leave the third impinger empty (or charge with caustic solution, as necessary), and transfer approximately 200-300 g of preweighed silica gel from its container to the fourth impinger. More silica gel may be used, but care should be taken to ensure that it is not entrained and carried out from the impinger during sampling. Place the container in a clean place for later use in the sample recovery. Alternatively, the weight of the silica gel plus impinger may be determined to the nearest 0.5 g and recorded.

6.4.4 Using a tweezer or clean disposable surgical gloves, place a labeled (identified) and weighed filter in the filter holder. Be sure that the filter is properly centered and the gasket properly placed to prevent the sample gas stream from circumventing the filter. Check the filter for tears after assembly is completed.

6.4.5 When glass liners are used, install the selected nozzle using a Viton-A O-ring when stack temperatures are <260°C (500°F) and a woven glass-fiber gasket when temperatures are higher. See APTD-0576 (Rom, 1972) for details. Other connecting systems utilizing either 316 stainless steel or Teflon ferrules may be used. When metal liners are used, install the nozzle as above, or by a leak-free direct mechanical connection. Mark the probe with heat-resistant tape or by some other method to denote the proper distance into the stack or duct for each sampling point.

6.4.6 Set up the train as in Figure 1. During assembly, do not use any silicone grease on ground-glass joints that are located upstream of the organic module. A very light coating of silicone grease may be used on all ground-glass joints that are located downstream of the organic module, but it should be limited to the outer portion (see APTD-0576) of the ground-glass joints to minimize silicone-grease contamination. Subject to the approval of the Administrator, a glass cyclone may be used between the probe and the filter holder when the total particulate catch is expected to exceed 100 mg or when water droplets are present in the stack. The organic module condenser must be maintained at a temperature of 17 ± 3°C. Connect all temperature sensors to an appropriate potentiometer/display unit. Check all temperature sensors at ambient temperature.

6.4.7 Place crushed ice around the impingers and the organic module condensate knockout.

6.4.8 Turn on the sorbent module and condenser coil coolant recirculating pump and begin monitoring the sorbent module gas entry temperature. Ensure proper sorbent module gas entry temperature before proceeding and again before any sampling is initiated. It is extremely important that the XAD-2 resin temperature never exceed 50°C (122°F), because thermal decomposition will occur. During testing, the XAD-2 temperature must not exceed 20°C (68°F) for efficient capture of the semivolatile species of interest.

6.4.9 Turn on and set the filter and probe heating systems at the desired operating temperatures. Allow time for the temperatures to stabilize.

6.5 Leak-check procedures

6.5.1 Pre-test leak-check:

6.5.1.1 Because the number of additional intercomponent connections in the Semi-VOST train (over the M5 Train) increases the possibility of leakage, a pre-test leak-check is required.

6.5.1.2 After the sampling train has been assembled, turn on and set the filter and probe heating systems at the desired operating temperatures. Allow time for the temperatures to stabilize. If a Viton A O-ring or other leak-free connection is used in assembling the probe nozzle to the probe liner, leak-check the train at the sampling site by plugging the nozzle and pulling a 381-mm Hg (15-in. Hg) vacuum.
(NOTE: A lower vacuum may be used, provided that it is not exceeded during the test.)

6.5.1.3 If an asbestos string is used, do not connect the probe to the train during the leak-check. Instead, leak-check the train by first attaching a carbon-filled leak-check impinger (shown in Figure 4) to the inlet of the filter holder (cyclone, if applicable) and then plugging the inlet and pulling a 381-mm Hg (15-in. Hg) vacuum. (Again, a lower vacuum may be used, provided that it is not exceeded during the test.) Then, connect the probe to the train and leak-check at about 25-mm Hg (1-in. Hg) vacuum; alternatively, leak-check the probe with the rest of the sampling train in one step at 381-mm Hg (15-in. Hg) vacuum. Leakage rates in excess of 4% of the average sampling rate or >0.00057 m^3/min (0.02 cfm), whichever is less, are unacceptable.

6.5.1.4 The following leak-check instructions for the sampling train described in APTD-0576 and APTD-0581 may be helpful. Start the pump with fine-adjust valve fully open and coarse-adjust valve completely closed. Partially open the coarse-adjust valve and slowly close the fine-adjust valve until the desired vacuum is reached. Do <u>not</u> reverse direction of the fine-adjust valve; this will cause water to back up into the organic module. If the desired vacuum is exceeded, either leak-check at this higher vacuum or end the leak-check, as shown below, and start over.

CROSS SECTIONAL VIEW

Leak Testing Apparatus

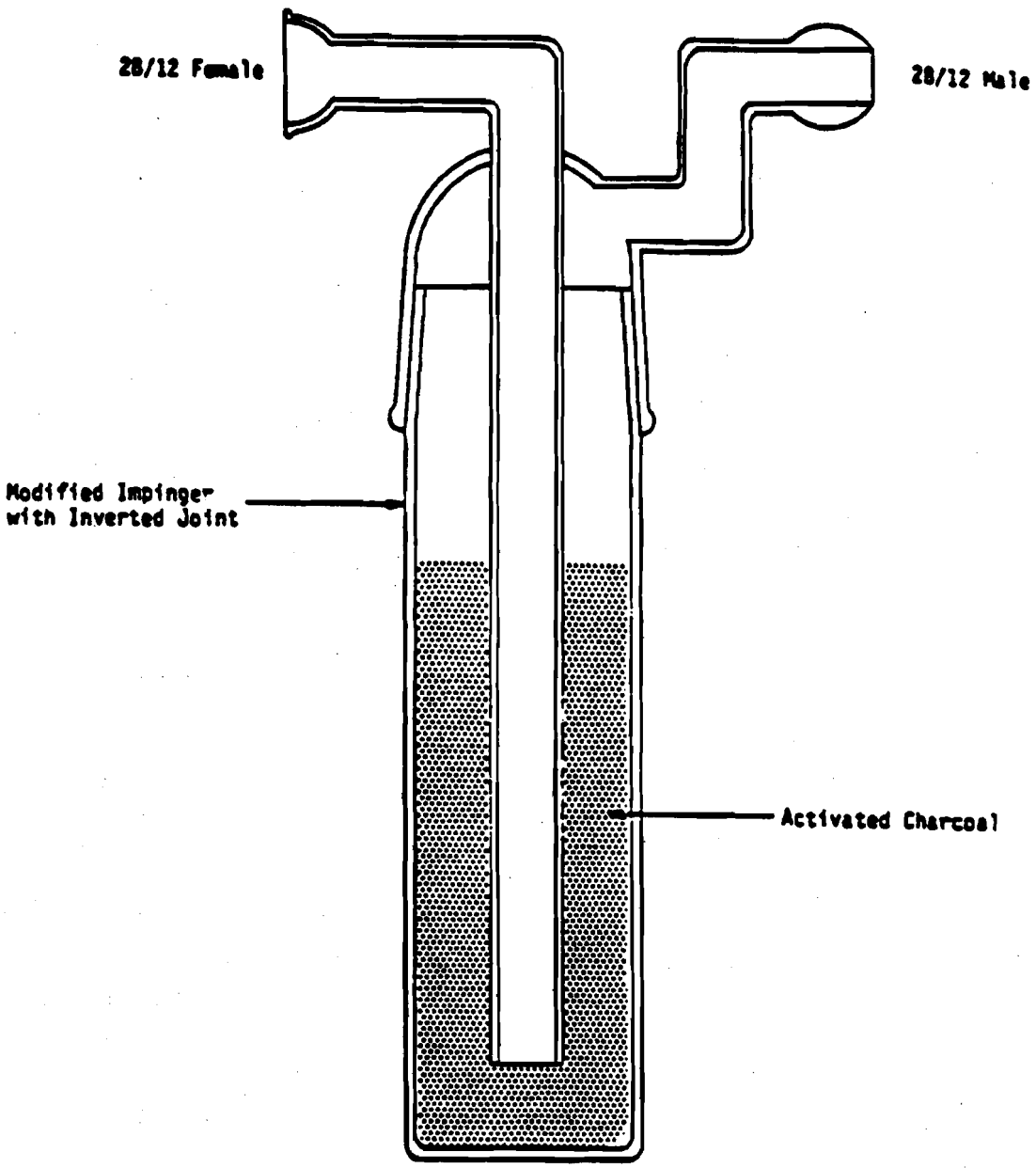

Figure 4. Leak-check impinger.

6.5.1.5 When the leak-check is completed, first slowly remove the plug from the inlet to the probe, filter holder, or cyclone (if applicable). When the vacuum drops to 127 mm (5 in.) Hg or less, immediately close the coarse-adjust valve. Switch off the pumping system and reopen the fine-adjust valve. Do not reopen the fine-adjust valve until the coarse-adjust valve has been closed. This prevents the water in the impingers from being forced backward into the organic module and silica gel from being entrained backward into the third impinger.

6.5.2 **Leak-checks during sampling run:**

6.5.2.1 If, during the sampling run, a component (e.g., filter assembly, impinger, or sorbent trap) change becomes necessary, a leak-check shall be conducted immediately after the interruption of sampling and before the change is made. The leak-check shall be done according to the procedure outlined in Paragraph 6.5.1, except that it shall be done at a vacuum greater than or equal to the maximum value recorded up to that point in the test. If the leakage rate is found to be no greater than 0.00057 m^3/min (0.02 cfm) or 4% of the average sampling rate (whichever is less), the results are acceptable, and no correction will need to be applied to the total volume of dry gas metered. If a higher leakage rate is obtained, the tester shall void the sampling run. (It should be noted that any "correction" of the sample volume by calculation by calculation reduces the integrity of the pollutant concentrations data generated and must be avoided.)

6.5.2.2 Immediately after a component change, and before sampling is reinitiated, a leak-check similar to a pre-test leak-check must also be conducted.

6.5.3 **Post-test leak-check:**

6.5.3.1 A leak-check is mandatory at the conclusion of each sampling run. The leak-check shall be done with the same procedures as those with the pre-test leak-check, except that it shall be conducted at a vacuum greater than or equal to the maximum value reached during the sampling run. If the leakage rate is found to be no greater than 0.00057 m^3/min (0.02 cfm) or 4% of the average sampling rate (whichever is less), the results are acceptable, and no correction need be applied to the total volume of dry gas metered. If, however, a higher leakage rate is obtained, the tester shall either record the leakage rate, correct the sample volume (as shown in the calculation section of this method), and consider the data obtained of questionable reliability, or void the sampling run.

6.6 <u>Sampling-train operation</u>:

6.6.1 During the sampling run, maintain an isokinetic sampling rate to within 10% of true isokinetic, unless otherwise specified by the Administrator. Maintain a temperature around the filter of 120 ± 14°C (248 ± 25°F) and a gas temperature entering the sorbent trap at a maximum of 20°C (68°F).

6.6.2 For each run, record the data required on a data sheet such as the one shown in Figure 5. Be sure to record the initial dry-gas meter reading. Record the dry-gas meter readings at the beginning and end of each sampling time increment, when changes in flow rates are made before and after each leak-check, and when sampling is halted. Take other readings required by Figure 5 at least once at each sample point during each time increment and additional readings when significant changes (20% variation in velocity-head readings) necessitate additional adjustments in flow rate. Level and zero the manometer. Because the manometer level and zero may drift due to vibrations and temperature changes, make periodic checks during the traverse.

6.6.3 Clean the stack access ports prior to the test run to eliminate the chance of sampling deposited material. To begin sampling, remove the nozzle cap, verify that the filter and probe heating systems are at the specified temperature, and verify that the pitot tube and probe are properly positioned. Position the nozzle at the first traverse point, with the tip pointing directly into the gas stream. Immediately start the pump and adjust the flow to isokinetic conditions. Nomographs, which aid in the rapid adjustment of the isokinetic sampling rate without excessive computations, are available. These nomographs are designed for use when the Type S pitot-tube coefficient is 0.84 $\pm$ 0.02 and the stack-gas equivalent density (dry molecular weight) is equal to 29 $\pm$ 4. APTD-0576 details the procedure for using the nomographs. If the stack-gas molecular weight and the pitot-tube coefficient are outside the above ranges, do not use the nomographs unless appropriate steps (Shigehara, 1974) are taken to compensate for the deviations.

6.6.4 When the stack is under significant negative pressure (equivalent to the height of the impinger stem), take care to close the coarse-adjust valve before inserting the probe into the stack, to prevent water from backing into the organic module. If necessary, the pump may be turned on with the coarse-adjust valve closed.

6.6.5 When the probe is in position, block off the openings around the probe and stack access port to prevent unrepresentative dilution of the gas stream.

6.6.6 Traverse the stack cross section, as required by EPA Method 1 or as specified by the Administrator, being careful not to bump the probe nozzle into the stack walls when sampling near the walls or when removing or inserting the probe through the access port, in order to minimize the chance of extracting deposited material.

6.6.7 During the test run, make periodic adjustments to keep the temperature around the filter holder and the organic module at the proper levels; add more ice and, if necessary, salt to maintain a temperature of <20°C (68°F) at the condenser/silica gel outlet. Also, periodically check the level and zero of the manometer.

Plant _____
Location _____
Operator _____
Date _____
Run No. _____
Sample Box No. _____
Meter Box No. _____
Meter HΔ _____
C Factor _____
Pitot Tube Coefficient C_p _____

Schematic of Stack Cross Section

Ambient Temperature _____
Barometric Pressure _____
Assumed Moisture % _____
Probe Length, m (ft) _____
Nozzle Identification No. _____
Average Calibrated Nozzle Diameter, cm (in) _____
Probe Heater Setting _____
Leak Rate, m^3/min, (cfm) _____
Probe Liner Material _____
Static Pressure, mm Hg (in. Hg) _____
Filter No. _____

Traverse Point Number	Sampling Time (θ) min.	Vacuum mm Hg (in. Hg)	Stack Temperature (T_s) °C(°F)	Velocity Head (P_s) mm (in) H_2O	Pressure Differential Across Orifice Meter mm (H_2O) (in H_2O)	Gas Sample Volume m_3 (ft_3)	Gas Sample Temp. at Dry Gas Meter Inlet °C(°F)	Gas Sample Temp. at Dry Gas Meter Outlet °C(F°)	Filter Holder Temperature °C(F°)	Temperature of Gas Entering Sorbet Trap °C(F°)	Temperature of Gas Leaving Condenser or Last Impinger
Total							Avg.	Avg.			
Average											

Figure 5. Particulate field data.

6.6.8 If the pressure drop across the filter or sorbent trap becomes too high, making isokinetic sampling difficult to maintain, the filter/sorbent trap may be replaced in the midst of a sample run. Using another complete filter holder/sorbent trap assembly is recommended, rather than attempting to change the filter and resin themselves. After a new filter/sorbent trap assembly is installed, conduct a leak-check. The total particulate weight shall include the summation of all filter assembly catches.

6.6.9 A single train shall be used for the entire sample run, except in cases where simultaneous sampling is required in two or more separate ducts or at two or more different locations within the same duct, or in cases where equipment failure necessitates a change of trains. In all other situations, the use of two or more trains will be subject to the approval of the Administrator.

6.6.10 Note that when two or more trains are used, separate analysis of the front-half (if applicable) organic-module and impinger (if applicable) catches from each train shall be performed, unless identical nozzle sizes were used on all trains. In that case, the front-half catches from the individual trains may be combined (as may the impinger catches), and one analysis of front-half catch and one analysis of impinger catch may be performed.

6.6.11 At the end of the sample run, turn off the coarse-adjust valve, remove the probe and nozzle from the stack, turn off the pump, record the final dry-gas meter reading, and conduct a post-test leak-check. Also, leak-check the pitot lines as described in EPA Method 2. The lines must pass this leak-check in order to validate the velocity-head data.

6.6.12 Calculate percent isokineticity (see Section 10.8) to determine whether the run was valid or another test run should be made.

7.0 SAMPLE RECOVERY

7.1 Preparation:

7.1.1 Proper cleanup procedure begins as soon as the probe is removed from the stack at the end of the sampling period. Allow the probe to cool. When the probe can be safely handled, wipe off all external particulate matter near the tip of the probe nozzle and place a cap over the tip to prevent losing or gaining particulate matter. Do not cap the probe tip tightly while the sampling train is cooling down because this will create a vacuum in the filter holder, drawing water from the impingers into the sorbent module.

7.1.2 Before moving the sample train to the cleanup site, remove the probe from the sample train and cap the open outlet, being careful not to lose any condensate that might be present. Cap the filter inlet.

Remove the umbilical cord from the last impinger and cap the impinger. If a flexible line is used between the organic module and the filter holder, disconnect the line at the filter holder and let any condensed water or liquid drain into the organic module.

7.1.3 Cap the filter-holder outlet and the inlet to the organic module. Separate the sorbent trap section of the organic module from the condensate knockout trap and the gas-conditioning section. Cap all organic module openings. Disconnect the organic-module knockout trap from the impinger train inlet and cap both of these openings. Ground-glass stoppers, Teflon caps, or caps of other inert materials may be used to seal all openings.

7.1.4 Transfer the probe, the filter, the organic-module components, and the impinger/condenser assembly to the cleanup area. This area should be clean and protected from the weather to minimize sample contamination or loss.

7.1.5 Save a portion of all washing solutions (methanol/methylene chloride, Type II water) used for cleanup as a blank. Transfer 200 mL of each solution directly from the wash bottle being used and place each in a separate, prelabeled glass sample container.

7.1.6 Inspect the train prior to and during disassembly and note any abnormal conditions.

7.2 Sample containers:

7.2.1 **Container no. 1:** Carefully remove the filter from the filter holder and place it in its identified Petri dish container. Use a pair or pairs of tweezers to handle the filter. If it is necessary to fold the filter, ensure that the particulate cake is inside the fold. Carefully transfer to the Petri dish any particulate matter or filter fibers that adhere to the filter-holder gasket, using a dry nylon bristle brush or sharp-edged blade, or both. Label the container and seal with 1-in.-wide Teflon tape around the circumference of the lid.

7.2.2 **Container no. 2:** Taking care that dust on the outside of the probe or other exterior surfaces does not get into the sample, quantitatively recover particulate matter or any condensate from the probe nozzle, probe fitting, probe liner, and front half of the filter holder by washing these components first with methanol/methylene chloride (1:1 v/v) into a glass container. Distilled water may also be used. Retain a water and solvent blank and analyze in the same manner as with the samples. Perform rinses as follows:

7.2.2.1 Carefully remove the probe nozzle and clean the inside surface by rinsing with the solvent mixture (1:1 v/v methanol/-methylene chloride) from a wash bottle and brushing with a nylon bristle brush. Brush until the rinse shows no visible particles; then make a final rinse of the inside surface with the solvent mix. Brush and rinse the inside parts of the Swagelok fitting with the solvent mix in a similar way until no visible particles remain.

7.2.2.2 Have two people rinse the probe liner with the solvent mix by tilting and rotating the probe while squirting solvent into its upper end so that all inside surfaces will be wetted with solvent. Let the solvent drain from the lower end into the sample container. A glass funnel may be used to aid in transferring liquid washes to the container.

7.2.2.3 Follow the solvent rinse with a probe brush. Hold the probe in an inclined position and squirt solvent into the upper end while pushing the probe brush through the probe with a twisting action; place a sample container underneath the lower end of the probe and catch any solvent and particulate matter that is brushed from the probe. Run the brush through the probe three times or more until no visible particulate matter is carried out with the solvent or until none remains in the probe liner on visual inspection. With stainless steel or other metal probes, run the brush through in the above-prescribed manner at least six times (metal probes have small crevices in which particulate matter can be entrapped). Rinse the brush with solvent and quantitatively collect these washings in the sample container. After the brushing, make a final solvent rinse of the probe as described above.

7.2.2.4 It is recommended that two people work together to clean the probe to minimize sample losses. Between sampling runs, keep brushes clean and protected from contamination.

7.2.2.5 Clean the inside of the front half of the filter holder and cyclone/cyclone flask, if used, by rubbing the surfaces with a nylon bristle brush and rinsing with methanol/methylene chloride (1:1 v/v) mixture. Rinse each surface three times or more if needed to remove visible particulate. Make a final rinse of the brush and filter holder. Carefully rinse out the glass cyclone and cyclone flask (if applicable). Brush and rinse any particulate material adhering to the inner surfaces of these components into the front-half rinse sample. After all solvent washings and particulate matter have been collected in the sample container, tighten the lid on the sample container so that solvent will not leak out when it is shipped to the laboratory. Mark the height of the fluid level to determine whether leakage occurs during transport. Label the container to identify its contents.

7.2.3 **Container no. 3:** The sorbent trap section of the organic module may be used as a sample transport container, or the spent resin may be transferred to a separate glass bottle for shipment. If the sorbent trap itself is used as the transport container, both ends should be sealed with tightly fitting caps or plugs. Ground-glass stoppers or Teflon caps may be used. The sorbent trap should then be labeled, covered with aluminum foil, and packaged on ice for transport to the laboratory. If a separate bottle is used, the spent resin should be quantitatively transferred from the trap into the clean bottle. Resin that adheres to the walls of the trap should be recovered using a rubber policeman or spatula and added to this bottle.

7.2.4 Container no. 4: Measure the volume of condensate collected in the condensate knockout section of the organic module to within ±1 mL by using a graduated cylinder or by weighing to within ±0.5 g using a triple-beam balance. Record the volume or weight of liquid present and note any discoloration or film in the liquid catch. Transfer this liquid to a prelabeled glass sample container. Inspect the back half of the filter housing and the gas-conditioning section of the organic module. If condensate is observed, transfer it to a graduated or weighing bottle and measure the volume, as described above. Add this material to the condensate knockout-trap catch.

7.2.5 Container no. 5: All sampling train components located between the high-efficiency glass- or quartz-fiber filter and the first wet impinger or the final condenser system (including the heated Teflon line connecting the filter outlet to the condenser) should be thoroughly rinsed with methanol/methylene chloride (1:1 v/v) and the rinsings combined. This rinse shall be separated from the condensate. If the spent resin is transferred from the sorbent trap to a separate sample container for transport, the sorbent trap shall be thoroughly rinsed until all sample-wetted surfaces appear clean. Visible films should be removed by brushing. Whenever train components are brushed, the brush should be subsequently rinsed with solvent mixture and the rinsings added to this container.

7.2.6 Container no. 6: Note the color of the indicating silica gel to determine if it has been completely spent and make a notation of its condition. Transfer the silica gel from the fourth impinger to its original container and seal. A funnel may make it easier to pour the silica gel without spilling. A rubber policeman may be used as an aid in removing the silica gel from the impinger. It is not necessary to remove the small amount of dust particles that may adhere strongly to the impinger wall. Because the gain in weight is to be used for moisture calculations, do not use any water or other liquids to transfer the silica gel. If a balance is available in the field, weigh the container and its contents to 0.5 g or better.

7.3 Impinger water:

7.3.1 Make a notation of any color or film in the liquid catch. Measure the liquid in the first three impingers to within ±1 mL by using a graduated cylinder or by weighing it to within ±0.5 g by using a balance (if one is available). Record the volume or weight of liquid present. This information is required to calculate the moisture content of the effluent gas.

7.3.2 Discard the liquid after measuring and recording the volume or weight, unless analysis of the impinger catch is required (see Paragraph 4.1.3.7). Amber glass containers should be used for storage of impinger catch, if required.

7.3.3 If a different type of condenser is used, measure the amount of moisture condensed either volumetrically or gravimetrically.

7.4 Sample preparation for shipment: Prior to shipment, recheck all sample containers to ensure that the caps are well secured. Seal the lids of all containers around the circumference with Teflon tape. Ship all liquid samples upright on ice and all particulate filters with the particulate catch facing upward. The particulate filters should be shipped unrefrigerated.

8.0 ANALYSIS

8.1 Sample preparation:

8.1.1 **General:** The preparation steps for all samples will result in a finite volume of concentrated solvent. The final sample volume (usually in the 1- to 10-mL range) is then subjected to analysis by GC/MS. All samples should be inspected and the appearance documented. All samples are to be spiked with surrogate standards as received from the field prior to any sample manipulations. The spike should be at a level equivalent to 10 times the MDL when the solvent is reduced in volume to the desired level (i.e., 10 mL). The spiking compounds should be the stable isotopically labeled analog of the compounds of interest or a compound that would exhibit properties similar to the compounds of interest, be easily chromatographed, and not interfere with the analysis of the compounds of interest. Suggested surrogate spiking compounds are: deuterated naphthalene, chrysene, phenol, nitrobenzene, chlorobenzene, toluene, and carbon-13-labeled pentachlorophenol.

8.1.2 **Condensate:** The "condensate" is the moisture collected in the first impinger following the XAD-2 module. Spike the condensate with the surrogate standards. The volume is measured and recorded and then transferred to a separatory funnel. The pH is to be adjusted to pH 2 with 6 N sulfuric acid, if necessary. The sample container and graduated cylinder are sequentially rinsed with three successive 10-mL aliquots of the extraction solvent and added to the separatory funnel. The ratio of solvent to aqueous sample should be maintained at 1:3. Extract the sample by vigorously shaking the separatory funnel for 5 min. After complete separation of the phases, remove the solvent and transfer to a Kuderna-Danish concentrator (K-D), filtering through a bed of precleaned, dry sodium sulfate. Repeat the extraction step two additional times. Adjust the pH to 11 with 6 N sodium hydroxide and reextract combining the acid and base extracts. Rinse the sodium sulfate into the K-D with fresh solvent and discard the desiccant. Add Teflon boiling chips and concentrate to 10 mL by reducing the volume to slightly less than 10 mL and then bringing to volume with fresh solvent. In order to achieve the necessary detection limit, the sample volume can be further reduced to 1 mL by using a micro column K-D or nitrogen blow-down. Should the sample start to exhibit precipitation, the concentration step should be stopped and the sample redissolved with fresh solvent taking the volume to some finite amount. After adding a standard (for the purpose of quantitation by GC/MS), the sample is ready for analysis, as discussed in Paragraph 8.2.

8.1.3 **Impinger:** Spike the sample with the surrogate standards; measure and record the volume and transfer to a separatory funnel. Proceed as described in Paragraph 8.1.2.

8.1.4 **XAD-2:** Spike the resin directly with the surrogate standards. Transfer the resin to the all-glass thimbles by the following procedure (care should be taken so as not to contaminate the thimble by touching it with anything other than tweezers or other solvent-rinsed mechanical holding devices). Suspend the XAD-2 module directly over the thimble. The glass frit of the module (see Figure 2) should be in the up position. The thimble is contained in a clean beaker, which will serve to catch the solvent rinses. Using a Teflon squeeze bottle, flush the XAD-2 into the thimble. Thoroughly rinse the glass module with solvent into the beaker containing the thimble. Add the XAD-2 glass-wool plug to the thimble. Cover the XAD-2 in the thimble with a precleaned glass-wool plug sufficient to prevent the resin from floating into the solvent reservoir of the extractor. If the resin is wet, effective extraction can be accomplished by loosely packing the resin in the thimble. If a question arises concerning the completeness of the extraction, a second extraction, without a spike, is advised. The thimble is placed in the extractor and the rinse solvent contained in the beaker is added to the solvent reservoir. Additional solvent is added to make the reservoir approximately two-thirds full. Add Teflon boiling chips and assemble the apparatus. Adjust the heat source to cause the extractor to cycle 5-6 times per hr. Extract the resin for 16 hr. Transfer the solvent and three 10-mL rinses of the reservoir to a K-D and concentrate as described in Paragraph 8.1.2.

8.1.5 **Particulate filter (and cyclone catch):** If particulate loading is to be determined, weigh the filter (and cyclone catch, if applicable). The particulate filter (and cyclone catch, if applicable) is transferred to the glass thimble and extracted simultaneously with the XAD-2 resin.

8.1.6 **Train solvent rinses:** All train rinses (i.e., probe, impinger, filter housing) using the extraction solvent and methanol are returned to the laboratory as a single sample. If the rinses are contained in more than one container, the intended spike is divided equally among the containers proportioned from a single syringe volume. Transfer the rinse to a separatory funnel and add a sufficient amount of organic-free water so that the methylene chloride becomes immiscible and its volume no longer increases with the addition of more water. The extraction and concentration steps are then performed as described in Paragraph 8.1.2.

8.2 Sample analysis:

8.2.1 The primary analytical tool for the measurement of emissions from hazardous waste incinerators is GC/MS using fused-silica capillary GC columns, as described in Method 8270 in Chapter Four of this manual. Because of the nature of GC/MS instrumentation and the cost associated

with sample analysis, prescreening of the sample extracts by gas chromatography/flame ionization detection (GC/FID) or with electron capture (GC/ECD) is encouraged. Information regarding the complexity and concentration level of a sample prior to GC/MS analysis can be of enormous help. This information can be obtained by using either capillary columns or less expensive packed columns. However, the FID screen should be performed with a column similar to that used with the GC/MS. Keep in mind that GC/FID has a slightly lower detection limit than GC/MS and, therefore, that the concentration of the sample can be adjusted either up or down prior to analysis by GC/MS.

8.2.2 The mass spectrometer will be operated in a full scan (40-450) mode for most of the analyses. The range for which data are acquired in a GC/MS run will be sufficiently broad to encompass the major ions, as listed in Chapter Four, Method 8270, for each of the designated POHCs in an incinerator effluent analysis.

8.2.3 For most purposes, electron ionization (EI) spectra will be collected because a majority of the POHCs give reasonable EI spectra. Also, EI spectra are compatible with the NBS Library of Mass Spectra and other mass spectral references, which aid in the identification process for other components in the incinerator process streams.

8.2.4 To clarify some identifications, chemical ionization (CI) spectra using either positive ions or negative ions will be used to elucidate molecular-weight information and simplify the fragmentation patterns of some compounds. In no case, however, should CI spectra alone be used for compound identification. Refer to Chapter Four, Method 8270, for complete descriptions of GC conditions, MS conditions, and quantitative and quantitative identification.

9.0 CALIBRATION

9.1 Probe nozzle: Probe nozzles shall be calibrated before their initial use in the field. Using a micrometer, measure the inside diameter of the nozzle to the nearest 0.025 mm (0.001 in.). Make measurements at three separate places across the diameter and obtain the average of the measurements. The difference between the high and low numbers shall not exceed 0.1 mm (0.004 in.). When nozzles become nicked, dented, or corroded, they shall be reshaped, sharpened, and recalibrated before use. Each nozzle shall be permanently and uniquely identified.

9.2 Pitot tube: The Type S pitot tube assembly shall be calibrated according to the procedure outlined in Section 4 of EPA Method 2, or assigned a nominal coefficient of 0.84 if it is not visibly nicked, dented, or corroded and if it meets design and intercomponent spacing specifications.

9.3 Metering system:

9.3.1 Before its initial use in the field, the metering system shall be calibrated according to the procedure outlined in APTD-0576. Instead of physically adjusting the dry-gas meter dial readings to correspond to the wet-test meter readings, calibration factors may be used to correct the gas meter dial readings mathematically to the proper values. Before calibrating the metering system, it is suggested that a leak-check be conducted. For metering systems having diaphragm pumps, the normal leak-check procedure will not detect leakages within the pump. For these cases the following leak-check procedure is suggested: Make a 10-min calibration run at 0.00057 m^3/min (0.02 cfm); at the end of the run, take the difference of the measured wet-test and dry-gas meter volumes and divide the difference by 10 to get the leak rate. The leak rate should not exceed 0.00057 m^3/min (0.02 cfm).

9.3.2 After each field use, the calibration of the metering system shall be checked by performing three calibration runs at a single intermediate orifice setting (based on the previous field test). The vacuum shall be set at the maximum value reached during the test series. To adjust the vacuum, insert a valve between the wet-test meter and the inlet of the metering system. Calculate the average value of the calibration factor. If the calibration has changed by more than 5%, recalibrate the meter over the full range of orifice settings, as outlined in APTD-0576.

9.3.3 **Leak-check of metering system:** That portion of the sampling train from the pump to the orifice meter (see Figure 1) should be leak-checked prior to initial use and after each shipment. Leakage after the pump will result in less volume being recorded than is actually sampled. The following procedure is suggested (see Figure 6): Close the main valve on the meter box. Insert a one-hole rubber stopper with rubber tubing attached into the orifice exhaust pipe. Disconnect and vent the low side of the orifice manometer. Close off the low side orifice tap. Pressurize the system to 13-18 cm (5-7 in.) water column by blowing into the rubber tubing. Pinch off the tubing and observe the manometer for 1 min. A loss of pressure on the manometer indicates a leak in the meter box. Leaks, if present, must be corrected.

NOTE: If the dry-gas-meter coefficient values obtained before and after a test series differ by >5%, either the test series shall be voided or calculations for test series shall be performed using whichever meter coefficient value (i.e., before or after) gives the lower value of total sample volume.

9.4 Probe heater: The probe-heating system shall be calibrated before its initial use in the field according to the procedure outlined in APTD-0576. Probes constructed according to APTD-0581 need not be calibrated if the calibration curves in APTD-0576 are used.

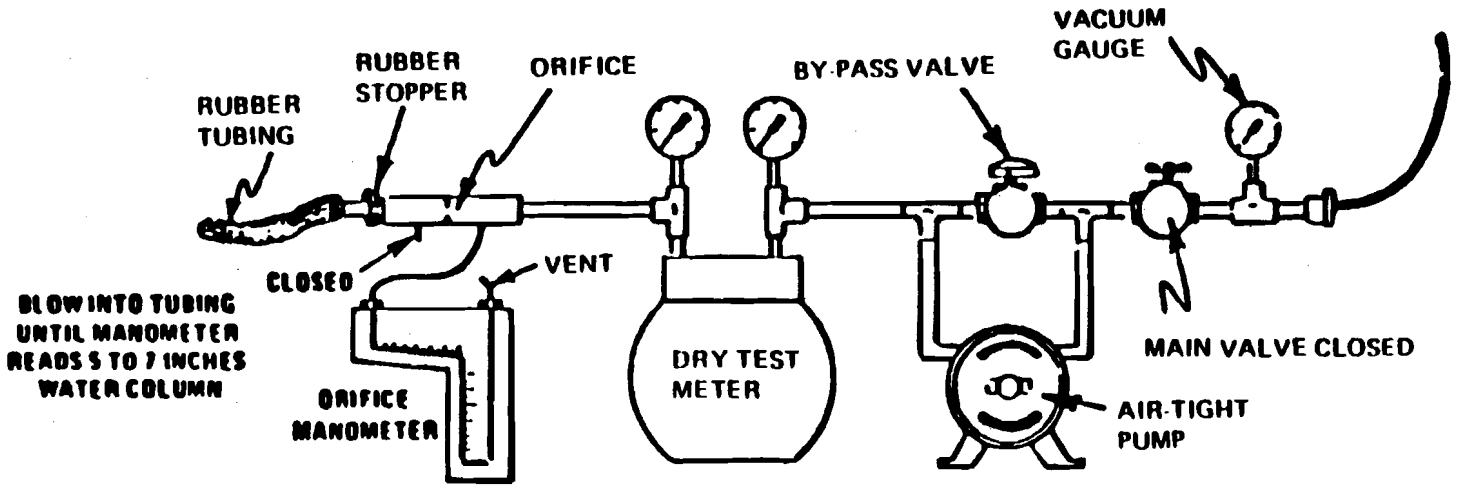

Figure 6. Leak-check of meter box.

9.5 Temperature gauges: Each thermocouple must be permanently and uniquely marked on the casting; all mercury-in-glass reference thermometers must conform to ASTM E-1 63C or 63F specifications. Thermocouples should be calibrated in the laboratory with and without the use of extension leads. If extension leads are used in the field, the thermocouple readings at ambient air temperatures, with and without the extension lead, must be noted and recorded. Correction is necessary if the use of an extension lead produces a change >1.5%.

9.5.1 **Impinger, organic module, and dry-gas meter thermocouples:** For the thermocouples used to measure the temperature of the gas leaving the impinger train and the XAD-2 resin bed, three-point calibration at ice-water, room-air, and boiling-water temperatures is necessary. Accept the thermocouples only if the readings at all three temperatures agree to ±2°C (3.6°F) with those of the absolute value of the reference thermometer.

9.5.2 **Probe and stack thermocouple:** For the thermocouples used to indicate the probe and stack temperatures, a three-point calibration at ice-water, boiling-water, and hot-oil-bath temperatures must be performed; it is recommended that room-air temperature be added, and that the thermometer and the thermocouple agree to within 1.5% at each of the calibration points. A calibration curve (equation) may be constructed (calculated) and the data extrapolated to cover the entire temperature range suggested by the manufacturer.

9.6 Barometer: Adjust the barometer initially and before each test series to agree to within ±25 mm Hg (0.1 in. Hg) of the mercury barometer or the corrected barometric pressure value reported by a nearby National Weather Service Station (same altitude above sea level).

9.7 Triple-beam balance: Calibrate the triple-beam balance before each test series, using Class-S standard weights; the weights must be within ±0.5% of the standards, or the balance must be adjusted to meet these limits.

10.0 CALCULATIONS

10.1 Carry out calculations. Round off figures after the final calculation to the correct number of significant figures.

10.2 Nomenclature:

A_n = Cross-sectional area of nozzle, m^2 (ft^2).

B_{ws} = Water vapor in the gas stream, proportion by volume.

C_d = Type S pitot tube coefficient (nominally 0.84 ± 0.02), dimensionless.

I = Percent of isokinetic sampling.

L_a = Maximum acceptable leakage rate for a leak-check, either pre-test or following a component change; equal to 0.00057 m^3/min (0.02 cfm) or 4% of the average sampling rate, whichever is less.

L_i = Individual leakage rate observed during the leak-check conducted prior to the "i^{th}" component change (i = 1, 2, 3...n) m^3/min (cfm).

L_p = Leakage rate observed during the post-test leak-check, m^3/min (cfm).

M_d = Stack-gas dry molecular weight, g/g-mole (lb/lb-mole).

M_w = Molecular weight of water, 18.0 g/g-mole (18.0 lb/lb-mole).

P_{bar} = Barometric pressure at the sampling site, mm Hg (in. Hg).

P_s = Absolute stack-gas pressure, mm Hg (in. Hg).

P_{std} = Standard absolute pressure, 760 mm Hg (29.92 in. Hg).

R = Ideal gas constant, 0.06236 mm Hg-m^3/K-g-mole (21.85 in. Hg-ft^3/°R-lb-mole).

T_m = Absolute average dry-gas meter temperature (see Figure 6), K (°R).

T_s = Absolute average stack-gas temperature (see Figure 6), K (°R).

T_{std} = Standard absolute temperature, 293K (528°R).

V_{lc} = Total volume of liquid collected in the organic module condensate knockout trap, the impingers, and silica gel, mL.

V_m = Volume of gas sample as measured by dry-gas meter, dscm (dscf).

$V_{m(std)}$ = Volume of gas sample measured by the dry-gas meter, corrected to standard conditions, dscm (dscf).

$V_{w(std)}$ = Volume of water vapor in the gas sample, corrected to standard conditions, scm (scf).

V_s = Stack-gas velocity, calculated by Method 2, Equation 2-9, using data obtained from Method 5, m/sec (ft/sec).

W_a = Weight of residue in acetone wash, mg.

γ = Dry-gas-meter calibration factor, dimensionless.

ΔH = Average pressure differential across the orifice meter (see Figure 2), mm H_2O (in. H_2O).

ρ_w = Density of water, 0.9982 g/mL (0.002201 lb/mL).

θ = Total sampling time, min.

θ_1 = Sampling time interval from the beginning of a run until the first component change, min.

θ_i = Sampling time interval between two successive component changes, beginning with the interval between the first and second changes, min.

θ_p = Sampling time interval from the final (n^{th}) component change until the end of the sampling run, min.

13.6 = Specific gravity of mercury.

60 = sec/min.

100 = Conversion to percent.

10.3 Average dry-gas-meter temperature and average orifice pressure drop: See data sheet (Figure 5, above).

10.4 Dry-gas volume: Correct the sample measured by the dry-gas meter to standard conditions (20°C, 760 mm Hg [68°F, 29.92 in. Hg]) by using Equation 1:

$$V_{m(std)} = V_m \gamma \frac{T_{std}}{T_m} \frac{P_{bar} + \Delta H/13.6}{P_{std}} = K_1 V_m \gamma \frac{P_{bar} + \Delta H/13.6}{T_m} \qquad (1)$$

where:

K_1 = 0.3858 K/mm Hg for metric units, or
K_1 = 17.64°R/in. Hg for English units.

It should be noted that Equation 1 can be used as written, unless the leakage rate observed during any of the mandatory leak-checks (i.e., the post-test leak-check or leak-checks conducted prior to component changes) exceeds L_a. If L_p or L_i exceeds L_a, Equation 1 must be modified as follows:

a. Case I (no component changes made during sampling run): Replace V_m in Equation 1 with the expression:

$$V_m - (L_p - L_a)$$

b. Case II (one or more component changes made during the sampling run): Replace V_m in Equation 1 by the expression:

$$V_m - (L_1 - L_a)\theta_1 - \sum_{i=2}^{n} (L_i - L_a)\theta_1 - (L_p - L_a)\theta_p$$

and substitute only for those leakage rates (L_1 or L_p) that exceed L_a.

10.5 Volume of water vapor:

$$V_{w(std)} = V_{1c} \frac{P_w}{M_w} \frac{RT_{std}}{P_{std}} = K_2 V_{1c} \qquad (2)$$

where:

K_2 = 0.001333 m^3/mL for metric units, or
K_2 = 0.04707 ft^3/mL for English units.

10.6 Moisture content:

$$B_{ws} = \frac{V_{w(std)}}{V_{m(std)} + V_{w(std)}} \qquad (3)$$

NOTE: In saturated or water-droplet-laden gas streams, two calculations of the moisture content of the stack gas shall be made, one from the impinger analysis (Equation 3) and a second from the assumption of saturated conditions. The lower of the two values of B_w shall be considered correct. The procedure for determining the moisture content based upon assumption of saturated conditions is given in the Note to Section 1.2 of Method 4. For the purposes of this method, the average stack-gas temperature from Figure 6 may be used to make this determination, provided that the accuracy of the in-stack temperature sensor is ±1°C (2°F).

10.7 Conversion factors:

From	To	Multiply by
scf	m^3	0.02832
g/ft^3	gr/ft^3	15.43
g/ft^3	lb/ft^3	2.205×10^{-3}
g/ft^3	g/m^3	35.31

10.8 Isokinetic variation:

10.8.1 **Calculation from raw data:**

$$I = \frac{100\ T_s[K_3F_{1c} + (V_m/T_m)\ (P_{bar} + \Delta H/13.6)]}{60\theta V_s P_s A_n} \qquad (4)$$

where:

K_3 = 0.003454 mm Hg-m^3/mL-K for metric units, or
K_3 = 0.002669 in. Hg-ft^3/mL-°R for English units.

10.8.2 **Calculation for intermediate values:**

$$I = \frac{T_s V_{m(std)} P_{std} 100}{T_{std} V_s \theta A_n P_s 60(1-B_{ws})} \qquad (5)$$

$$= K_4 \frac{T_s V_{m(std)}}{P_s V_s A_n \theta (1-B_{ws})}$$

where:

K_4 = 4.320 for metric units, or
K_4 = 0.09450 for English units.

10.8.3 **Acceptable results:** If 90% $\leq$ I $\leq$ 110%, the results are acceptable. If the results are low in comparison with the standard and I is beyond the acceptable range, or if I is less than 90%, the Administrator may opt to accept the results.

10.9 To determine the minimum sample volume that shall be collected, the following sequence of calculations shall be used.

10.9.1 From prior analysis of the waste feed, the concentration of POHCs introduced into the combustion system can be calculated. The degree of destruction and removal efficiency that is required is used to determine the maximum amount of POHC allowed to be present in the effluent. This may be expressed as:

$$\frac{(WF)\ (POHC_i\ conc)}{100} \frac{(100-\%DRE)}{100} = Max\ POHC_i\ Mass \qquad (6)$$

where:

WF = mass flow rate of waste feed per hr, g/hr (lb/hr).

$POHC_i$ = concentration of Principal Organic Hazardous Compound (wt %) introduced into the combustion process.

DRE = percent Destruction and Removal Efficiency required.

Max POHC = mass flow rate (g/hr [lb/hr]) of POHC emitted from the combustion source.

10.9.2 The average discharge concentration of the POHC in the effluent gas is determined by comparing the Max POHC with the volumetric flow rate being exhausted from the source. Volumetric flow rate data are available as a result of preliminary Method 1-4 determinations:

$$\frac{\text{Max POHC}_i \text{ Mass}}{DV_{eff(std)}} = \text{Max POHC}_i \text{ conc} \qquad (7)$$

where:

$DV_{eff(std)}$ = volumetric flow rate of exhaust gas, dscm (dscf).

$POHC_i$ conc = anticipated concentration of the POHC in the exhaust gas stream, g/dscm (lb/dscf).

10.9.3 In making this calculation, it is recommended that a safety margin of at least ten be included:

$$\frac{LDL_{POHC} \times 10}{POHC_i \text{ conc}} = V_{TBC} \qquad (8)$$

where:

LDL_{POHC} = detectable amount of POHC in entire sampling train.
NOTE: The whole extract from an XAD-2 cartridge is seldom if ever, injected at once. Therefore, if aliquoting factors are involved, the LDL_{POHC} is not the same as the analytical (or column) detection limit.

V_{TBC} = minimum dry standard volume to be collected at dry-gas meter.

10.10 <u>Concentration of any given POHC in the gaseous emissions of a combustion process</u>:

1) Multiply the concentration of the POHC as determined in Method 8270 by the final concentration volume, typically 10 mL.

C_{POHC} (ug/mL) x sample volume (mL) = amount (ug) of POHC in sample (9)

where:

C_{POHC} = concentration of POHC as analyzed by Method 8270.

2) Sum the amount of POHC found in all samples associated with a single train.

Total (ug) = XAD-2 (ug) + condensate (ug) + rinses (ug) + impinger (ug) (10)

3) Divide the total ug found by the volume of stack gas sampled (m^3).

(Total ug)/(train sample volume) = concentration of POHC (ug/m^3) (11)

11.0 QUALITY CONTROL

11.1 Sampling: See EPA Manual 600/4-77-027b for Method 5 quality control.

11.2 Analysis: The quality assurance program required for this study includes the analysis of field and method blanks, procedure validations, incorporation of stable labeled surrogate compounds, quantitation versus stable labeled internal standards, capillary column performance checks, and external performance tests. The surrogate spiking compounds selected for a particular analysis are used as primary indicators of the quality of the analytical data for a wide range of compounds and a variety of sample matrices. The assessment of combustion data, positive identification, and quantitation of the selected compounds are dependent on the integrity of the samples received and the precision and accuracy of the analytical methods employed. The quality assurance procedures for this method are designed to monitor the performance of the analytical method and to provide the required information to take corrective action if problems are observed in laboratory operations or in field sampling activities.

11.2.1 **Field Blanks:** Field blanks must be submitted with the samples collected at each sampling site. The field blanks include the sample bottles containing aliquots of sample recovery solvents, unused filters, and resin cartridges. At a minimum, one complete sampling train will be assembled in the field staging area, taken to the sampling area, and leak-checked at the beginning and end of the testing (or for the same total number of times as the actual test train). The filter housing and probe of the blank train will be heated during the sample test. The train will be recovered as if it were an actual test sample. No gaseous sample will be passed through the sampling train.

11.2.2 **Method blanks:** A method blank must be prepared for each set of analytical operations, to evaluate contamination and artifacts that can be derived from glassware, reagents, and sample handling in the laboratory.

11.2.3 Refer to Method 8270 for additional quality control considerations.

12.0 METHOD PERFORMANCE

12.1 Method performance evaluation: Evaluation of analytical procedures for a selected series of compounds must include the sample-preparation procedures and each associated analytical determination. The analytical procedures should be challenged by the test compounds spiked at appropriate levels and carried through the procedures.

12.2 Method detection limit: The overall method detection limits (lower and upper) must be determined on a compound-by-compound basis because different compounds may exhibit different collection, retention, and extraction efficiencies as well as instrumental minimum detection limit (MDL). The method detection limit must be quoted relative to a given sample volume. The upper limits for the method must be determined relative to compound retention volumes (breakthrough).

12.3 Method precision and bias: The overall method precision and bias must be determined on a compound-by-compound basis at a given concentration level. The method precision value would include a combined variability due to sampling, sample preparation, and instrumental analysis. The method bias would be dependent upon the collection, retention, and extraction efficiency of the train components. From evaluation studies to date using a dynamic spiking system, method biases of -13% and -16% have been determined for toluene and 1,1,2,2-tetrachloroethane, respectively. A precision of 19.9% was calculated from a field test data set representing seven degrees of freedom which resulted from a series of paired, unspiked Semivolatile Organic Sampling trains (Semi-VOST) sampling emissions from a hazardous waste incinerator.

13.0 REFERENCES

1. Addendum to Specifications for Incinerator Testing at Federal Facilities, PHS, NCAPC, December 6, 1967.

2. Bursey, J., Homolya, J., McAllister, R., and McGangley, J., Laboratory and Field Evaluation of the Semi-VOST Method, Vols. 1 and 2, U.S. Environmental Protection Agency, EPA/600/4-851/075A, 075B (1985).

3. Martin, R.M., Construction Details of Isokinetic Source-Sampling Equipment, Research Triangle Park, NC, U.S. Environmental Protection Agency, April 1971, PB-203 060/BE, APTD-0581, 35 pp.

4. Rom, J.J., Maintenance, Calibration, and Operation of Isokinetic Source-Sampling Equipment, Research Triangle Park, NC, U.S. Environmental Protection Agency, March 1972, PB-209 022/BE, APTD-0576, 39 pp.

5. Schlickenrieder, L.M., Adams, J.W., and Thrun, K.E., Modified Method 5 Train and Source Assessment Sampling System: Operator's Manual, U.S. Environmental Protection Agency, EPA/600/8-85/003, (1985).

6. Shigehara, R.T., Adjustments in the EPA Nomography for Different Pitot Tube Coefficients and Dry Molecular Weights, Stack Sampling News, 2:4-11 (October 1974).

7. U.S. Environmental Protection Agency, CFR 40 Part 60, Appendix A, Methods 1-5.

8. Vollaro, R.F., A Survey of Commercially Available Instrumentation for the Measurement of Low-Range Gas Velocities, Research Triangle Park, NC, U.S. Environmental Protection Agency, Emissions Measurement Branch, November 1976 (unpublished paper).

METHOD 0010, APPENDIX A

PREPARATION OF XAD-2 SORBENT RESIN

1.0 SCOPE AND APPLICATION

1.1 XAD-2 resin as supplied by the manufacturer is impregnated with a bicarbonate solution to inhibit microbial growth during storage. Both the salt solution and any residual extractable monomer and polymer species must be removed before use. The resin is prepared by a series of water and organic extractions, followed by careful drying.

2.0 EXTRACTION

2.1 Method 1: The procedure may be carried out in a giant Soxhlet extractor. An all-glass thimble containing an extra-coarse frit is used for extraction of XAD-2. The frit is recessed 10-15 mm above a crenellated ring at the bottom of the thimble to facilitate drainage. The resin must be carefully retained in the extractor cup with a glass-wool plug and stainless steel screen because it floats on methylene chloride. This process involves sequential extraction in the following order.

Solvent	Procedure
Water	Initial rinse: Place resin in a beaker, rinse once with Type II water, and discard. Fill with water a second time, let stand overnight, and discard.
Water	Extract with H_2O for 8 hr.
Methyl alcohol	Extract for 22 hr.
Methylene chloride	Extract for 22 hr.
Methylene chloride (fresh)	Extract for 22 hr.

2.2 Method 2:

2.2.1 As an alternative to Soxhlet extraction, a continuous extractor has been fabricated for the extraction sequence. This extractor has been found to be acceptable. The particular canister used for the apparatus shown in Figure A-1 contains about 500 g of finished XAD-2. Any size may be constructed; the choice is dependent on the needs of the sampling programs. The XAD-2 is held under light spring tension between a pair of coarse and fine screens. Spacers under the bottom screen allow for even distribution of clean solvent. The three-necked flask should be of sufficient size (3-liter in this case) to hold solvent

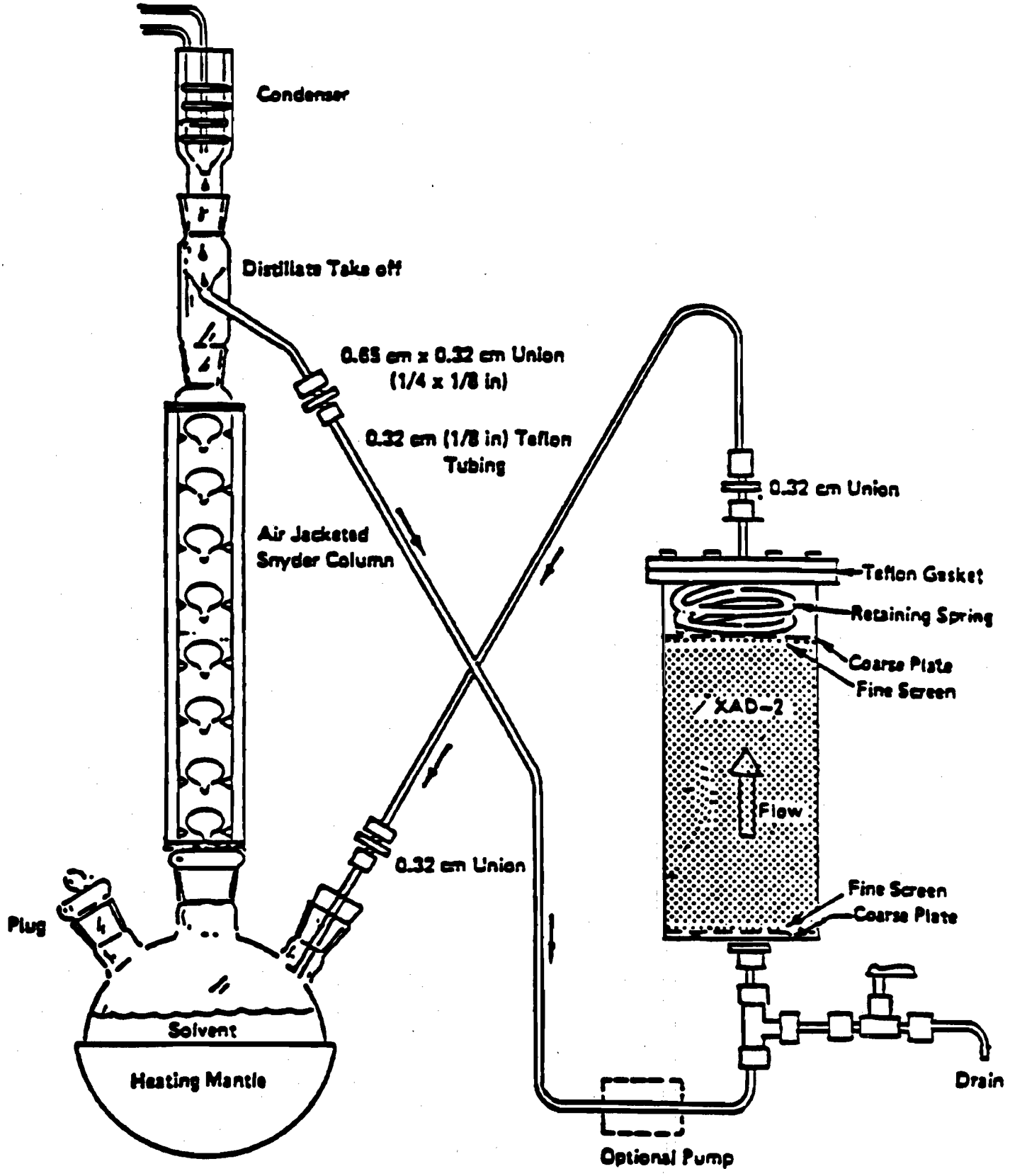

Figure A-1. XAD-2 cleanup extraction apparatus.

equal to twice the dead volume of the XAD-2 canister. Solvent is refluxed through the Snyder column, and the distillate is continuously cycled up through the XAD-2 for extraction and returned to the flask. The flow is maintained upward through the XAD-2 to allow maximum solvent contact and prevent channeling. A valve at the bottom of the canister allows removal of solvent from the canister between changes.

2.2.2 Experience has shown that it is very difficult to cycle sufficient water in this mode. Therefore the aqueous rinse is accomplished by simply flushing the canister with about 20 liters of distilled water. A small pump may be useful for pumping the water through the canister. The water extraction should be carried out at the rate of about 20-40 mL/min.

2.2.3 After draining the water, subsequent methyl alcohol and methylene chloride extractions are carried out using the refluxing apparatus. An overnight or 10- to 20-hr period is normally sufficient for each extraction.

2.2.4 All materials of construction are glass, Teflon, or stainless steel. Pumps, if used, should not contain extractable materials. Pumps are not used with methanol and methylene chloride.

3.0 DRYING

3.1 After evaluation of several methods of removing residual solvent, a fluidized-bed technique has proved to be the fastest and most reliable drying method.

3.2 A simple column with suitable retainers, as shown in Figure A-2, will serve as a satisfactory column. A 10.2-cm (4-in.) Pyrex pipe 0.6 m (2 ft) long will hold all of the XAD-2 from the extractor shown in Figure A-1 or the Soxhlet extractor, with sufficient space for fluidizing the bed while generating a minimum resin load at the exit of the column.

3.3 Method 1: The gas used to remove the solvent is the key to preserving the cleanliness of the XAD-2. Liquid nitrogen from a standard commercial liquid nitrogen cylinder has routinely proved to be a reliable source of large volumes of gas free from organic contaminants. The liquid nitrogen cylinder is connected to the column by a length of precleaned 0.95-cm (3/8-in.) copper tubing, coiled to pass through a heat source. As nitrogen is bled from the cylinder, it is vaporized in the heat source and passes through the column. A convenient heat source is a water bath heated from a steam line. The final nitrogen temperature should only be warm to the touch and not over 40°C. Experience has shown that about 500 g of XAD-2 may be dried overnight by consuming a full 160-liter cylinder of liquid nitrogen.

3.4 Method 2: As a second choice, high-purity tank nitrogen may be used to dry the XAD-2. The high-purity nitrogen must first be passed through a bed

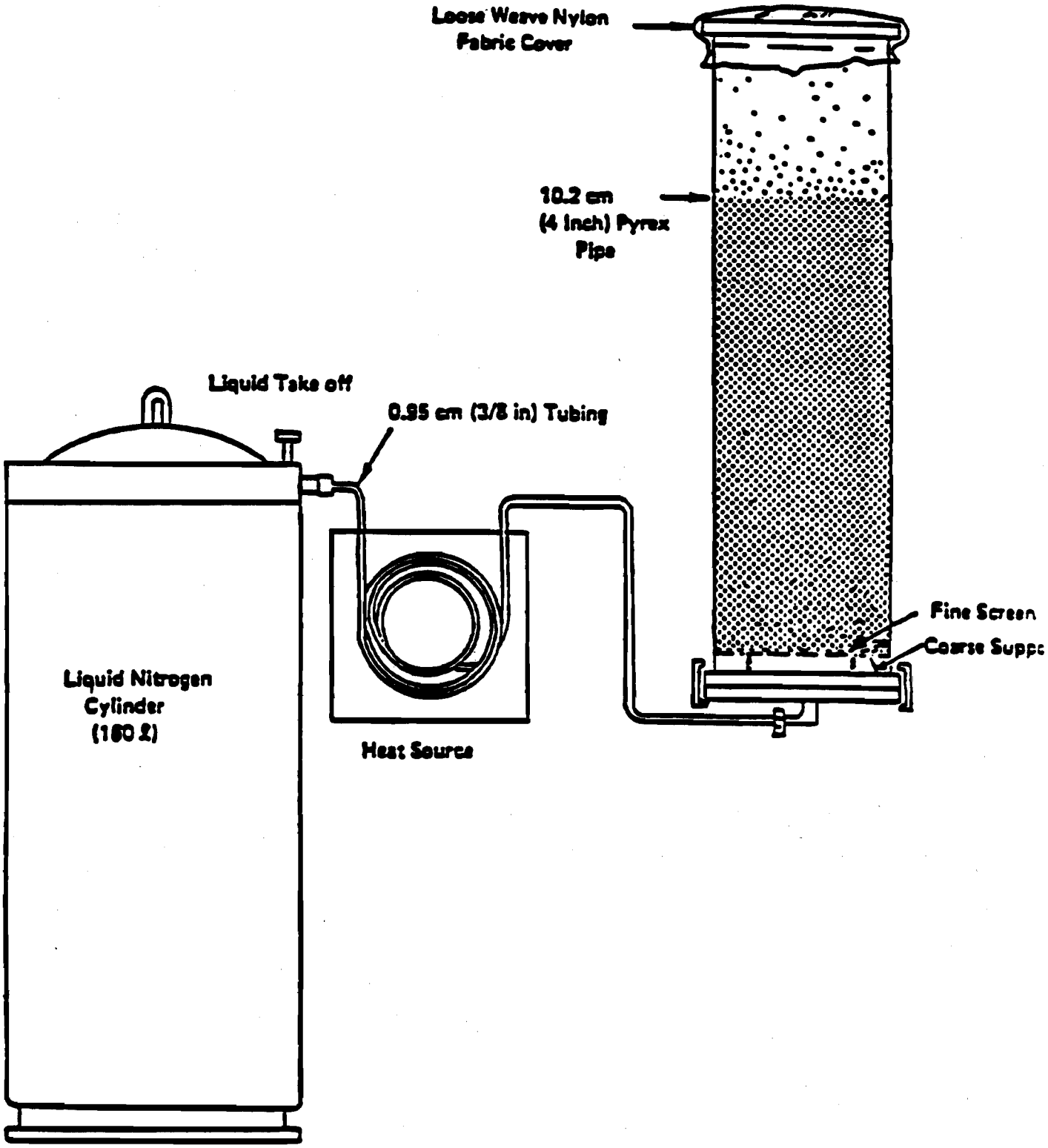

Figure A-2. XAD-2 fluidized-bed drying apparatus.

of activated charcoal approximately 150 mL in volume. With either type of drying method, the rate of flow should gently agitate the bed. Excessive fluidization may cause the particles to break up.

4.0 QUALITY CONTROL PROCEDURES

4.1 For both Methods 1 and 2, the quality control results must be reported for the batch. The batch must be reextracted if the residual extractable organics are >20 ug/mL by TCO analysis or the gravimetric residue is >0.5 mg/20 g XAD-2 extracted. (See also section 5.1, Method 0010.)

4.2 Four control procedures are used with the final XAD-2 to check for (1) residual methylene chloride, (2) extractable organics (TCO), (3) specific compounds of interest as determined by GC/MS, as described in Section 4.5 below, and (4) residue (GRAV).

4.3 Procedure for residual methylene chloride:

4.3.1 **Description:** A 1±0.1-g sample of dried resin is weighed into a small vial, 3 mL of toluene are added, and the vial is capped and well shaken. Five uL of toluene (now containing extracted methylene chloride) are injected into a gas chromatograph, and the resulting integrated area is compared with a reference standard. The reference solution consists of 2.5 uL of methylene chloride in 100 mL of toluene, simulating 100 ug of residual methylene chloride on the resin. The acceptable maximum content is 1,000 ug/g resin.

4.3.2 **Experimental:** The gas chromatograph conditions are as follows:

6-ft x 1/8-in. stainless steel column containing 10% OV-101 on 100/120 Supelcoport;

Helium carrier at 30 mL/min;

FID operated on 4 x 10^{-11} A/mV;

Injection port temperature: 250°C;

Detector temperature: 305°C;

Program: 30°C(4 min) 40°C/min 250°C (hold); and

Program terminated at 1,000 sec.

4.4 Procedure for residual extractable organics:

4.4.1 **Description:** A 20±0.1-g sample of cleaned, dried resin is weighed into a precleaned alundum or cellulose thimble which is plugged with cleaned glass wool. (Note that 20 g of resin will fill a thimble, and the

resin will float out unless well plugged.) The thimble containing the resin is extracted for 24 hr with 200-mL of pesticide- grade methylene chloride (Burdick and Jackson pesticide-grade or equivalent purity). The 200-mL extract is reduced in volume to 10-mL using a Kuderna-Danish concentrator and/or a nitrogen evaporation stream. Five uL of that solution are analyzed by gas chromatography using the TCO analysis procedure. The concentrated solution should not contain >20 ug/mL of TCO extracted from the XAD-2. This is equivalent to 10 ug/g of TCO in the XAD-2 and would correspond to 1.3 mg of TCO in the extract of the 130-g XAD-2 module. Care should be taken to correct the TCO data for a solvent blank prepared (200 mL reduced to 10 mL) in a similar manner.

4.4.2 **Experimental:** Use the TCO analysis conditions described in the revised Level 1 manual (EPA 600/7-78-201).

4.5 GC/MS Screen: The extract, as prepared in paragraph 4.4.1, is subjected to GC/MS analysis for each of the individual compounds of interest. The GC/MS procedure is described in Chapter Four, Method 8270. The extract is screened at the MDL of each compound. The presence of any compound at a concentration >25 ug/mL in the concentrated extract will require the XAD-2 to be recleaned by repeating the methylene chloride step.

4.6 Methodology for residual gravimetric determination: After the TCO value and GC/MS data are obtained for the resin batch by the above procedures, dry the remainder of the extract in a tared vessel. There must be <0.5 mg residue registered or the batch of resin will have to be extracted with fresh methylene chloride again until it meets this criterion. This level corresponds to 25 ug/g in the XAD-2, or about 3.25 mg in a resin charge of 130 g.

METHOD 0010, APPENDIX B

TOTAL CHROMATOGRAPHABLE ORGANIC MATERIAL ANALYSIS

1.0 SCOPE AND APPLICATION

1.1 In this procedure, gas chromatography is used to determine the quantity of lower boiling hydrocarbons (boiling points between 90° and 300°C) in the concentrates of all organic solvent rinses, XAD-2 resin and LC fractions - when Method 1 is used (see References, Method 0010) - encountered in Level 1 environmental sample analyses. Data obtained using this procedure serve a twofold purpose. First, the total quantity of the lower boiling hydrocarbons in the sample is determined. Then whenever the hydrocarbon concentrations in the original concentrates exceed 75 ug/m^3, the chromatography results are reexamined to determine the amounts of individual species.

The extent of compound identification is limited to representing all materials as normal alkanes based upon comparison of boiling points. Thus the method is not qualitative. In a similar manner, the analysis is semiquantitative; calibrations are prepared using only one hydrocarbon. They are replicated but samples routinely are not.

1.2 Application: This procedure applies solely to the Level 1 C7-C16 gas chromatographic analysis of concentrates of organic extracts, neat liquids, and of LC fractions. Throughout the procedure, it is assumed the analyst has been given a properly prepared sample.

1.3 Sensitivity: The sensitivity of this procedure, defined as the slope of a plot of response versus concentration, is dependent on the instrument and must be verified regularly. TRW experience indicates the nominal range is of the order of 77 uV·V·sec·uL/ng of n-heptane and 79 uV·sec·ul/ng of n-hexadecane. The instrument is capable of perhaps one hundredfold greater sensitivity. The level specified here is sufficient for Level 1 analysis.

1.4 Detection limit: The detection limit of this procedure as written is 1.3 ng/uL for a 1 uL injection of n-decane. This limit is arbitrarily based on defining the minimum detectable response as 100 uv·sec. This is an easier operational definition than defining the minimum detection limit to be that amount of material which yields a signal twice the noise level.

1.5 Range: The range of the procedure will be concentrations of 1.3 ng/uL and greater.

1.6 Limitations

1.6.1 **Reporting limitations:** It should be noted that a typical environmental sample will contain compounds which: (a) will not elute in the specified boiling ranges and thus will not be reported, and/or (b)

will not elute from the column at all and thus will not be reported. Consequently, the organic content of the sample as reported is a lower bound and should be regarded as such.

1.6.2 **Calibration limitations:** Quantitation is based on calibration with n-decane. Data should therefore be reported as, e.g., mg C8/m^3 as n-decane. Since response varies linearly with carbon number (over a wide range the assumption may involve a 20% error), it is clear that heptane (C7) detected in a sample and quantitated as decane will be overestimated. Likewise, hexadecane (C16) quantitated as decane will be underestimated. From previous data, it is estimated the error involved is on the order of 6-7%.

1.6.3 **Detection limitations:** The sensitivity of the flame ionization detector varies from compound to compound. However, n-alkanes have a greater response than other classes. Consequently, using an n-alkane as a calibrant and assuming equal responses of all other compounds tends to give low reported values.

2.0 SUMMARY OF METHOD

2.1 A mL aliquot of all 10-mL concentrates is disbursed for GC-TCO analysis. With boiling point-retention time and response-amount calibration curves, the data (peak retention times and peak areas) are interpreted by first summing peak areas in the ranges obtained from the boiling point-retention time calibration. Then, with the response-amount calibration curve, the area sums are converted to amounts of material in the reported boiling point ranges.

2.2 After the instrument is set up, the boiling point-retention time calibration is effected by injecting a mixture of n-C7 through n-C16 hydrocarbons and operating the standard temperature program. Response-quantity calibrations are accomplished by injecting n-decane in n-pentane standards and performing the standard temperature program.

2.3 Definitions

2.3.1 **GC:** Gas chromatography or gas chromatograph.

2.3.2 **C7-C16 n-alkanes:** Heptane through hexadecane.

2.3.3 **GCA temperature program:** 4 min isothermal at 60°C, 10°C/min from 60° to 220°C.

2.3.4 **TRW temperature program:** 5 min isothermal at room temperature, then program from 30°C to 250°C at 15°C/min.

3.0 INTERFERENCES

Not applicable.

4.0 APPARATUS AND MATERIALS

4.1 Gas chromatograph: This procedure is intended for use on a Varian 1860 gas chromatograph, equipped with dual flame ionization detectors and a linear temperature programmer. Any equivalent instrument can be used provided that electrometer settings, etc., be changed appropriately.

4.2 Gases:

4.2.1 **Helium:** Minimum quality is reactor grade. A 4A or 13X molecular sieve drying tube is required. A filter must be placed between the trap and the instrument. The trap should be recharged after every third tank of helium.

4.2.2 **Air:** Zero grade is satisfactory.

4.2.3 **Hydrogen:** Zero grade.

4.3 Syringe: Syringes are Hamilton 701N, 10 uL, or equivalent.

4.4 Septa: Septa will be of such quality as to produce very low bleed during the temperature program. An appropriate septum is Supelco Microsep 138, which is Teflon-backed. If septum bleed cannot be reduced to a negligible level, it will be necessary to install septum swingers on the instrument.

4.5 Recorder: The recorder of this procedure must be capable of not less than 1 mV full-scale display, a 1-sec time constant and 0.5 in. per min chart rate.

4.6 Integrator: An integrator is required. Peak area measurement by hand is satisfactory but too time-consuming. If manual integration is required, the method of "height times width at half height" is used.

4.7 Columns:

4.7.1 **Preferred column:** 6 ft x 1/8 in. O.D. stainless steel column of 10% OV-101 on 100/120 mesh Supelcoport.

4.7.2 **Alternate column:** 6 ft x 1/8 in. O.D. stainless steel column of 10% OV-1 (or other silicon phase) on 100/120 mesh Supelcoport.

4.8 Syringe cleaner: Hamilton syringe cleaner or equivalent connected to a suitable vacuum source.

5.0 REAGENTS

5.1 Pentane: "Distilled-in-Glass" (reg. trademark) or "Nanograde" (reg. trademark) for standards and for syringe cleaning.

5.2 Methylene chloride: "Distilled-in-Glass" (reg. trademark) or "Nanograde" (reg. trademark) for syringe cleaning.

6.0 SAMPLING HANDLING AND PRESERVATION

6.1 The extracts are concentrated in a Kuderna-Danish evaporator to a volume less than 10 mL. The concentrate is then quantitatively transferred to a 10-mL volumetric flask and diluted to volume. A 1-mL aliquot is taken for both this analysis and possible subsequent GC/MS analysis and set aside in the sample bank. For each GC-TCO analysis, obtain the sample sufficiently in advance to allow it to warm to room temperature. For example, after one analysis is started, return that sample to the sample bank and take the next sample.

7.0 PROCEDURES

7.1 Setup and checkout: Each day, the operator will verify the following:

7.1.1 That supplies of carrier gas, air and hydrogen are sufficient, i.e., that each tank contains > 100 psig.

7.1.2 That, after replacement of any gas cylinder, all connections leading to the chromatograph have been leak-checked.

7.1.3 That the carrier gas flow rate is 30 ± 2 mL/min, the hydrogen flow rate is 30 ± 2 mL/min, and the air flow rate is 300 ± 20 mL/min.

7.1.4 That the electrometer is functioning properly.

7.1.5 That the recorder and integrator are functioning properly.

7.1.6 That the septa have been leak-checked (leak-checking is effected by placing the soap bubble flow meter inlet tube over the injection port adaptors), and that no septum will be used for more than 20 injections.

7.1.7 That the list of samples to be run is ready.

7.2 Retention time calibration:

7.2.1 To obtain the temperature ranges for reporting the results of the analyses, the chromatograph is given a normal boiling point-retention time calibration. The n-alkanes, their boiling points, and data reporting ranges are given in the table below:

	NBP, °C	Reporting Range, °C	Report As
n-heptane	98	90-110	C7
n-octane	126	110-140	C8
n-nonane	151	140-160	C9
n-decane	174	160-180	C10
n-undecane	194	180-200	C11
n-dodecane	214	200-220	C12
n-tridecane	234	220-240	C13
n-tetradecane	252	240-260	C14
n-pentadecane	270	260-280	C15
n-hexadecane	288	280-300	C16

7.2.2 **Preparation of standards:** Preparing a mixture of the C7-C16 alkanes is required. There are two approaches: (1) use of a standards kit (e.g., Polyscience Kit) containing bottles of mixtures of selected n-alkanes which may be combined to produce a C7-C16 standard; or (2) use of bottles of the individual C7-C16 alkanes from which accurately known volumes may be taken and combined to give a C7-C16 mixture.

7.2.3 **Procedure for retention time calibration:** This calibration is performed at the start of an analytical program; the mixture is chromatographed at the start of each day. To attain the required retention time precision, both the carrier gas flow rate and the temperature program specifications must be observed. Details of the procedure depend on the instrument being used. The general procedure is as follows:

7.2.3.1 Set the programmer upper limit at 250°C. If this setting does not produce a column temperature of 250°C, find the correct setting.

7.2.3.2 Set the programmer lower limit at 30°C.

7.2.3.3 Verify that the instrument and samples are at room temperature.

7.2.3.4 Inject 1 uL of the n-alkane mixture.

7.2.3.5 Start the integrator and recorder.

7.2.3.6 Allow the instrument to run isothermally at room temperature for five min.

7.2.3.7 Shut the oven door.

7.2.3.8 Change the mode to Automatic and start the temperature program.

7.2.3.9 Repeat Steps 1-9 a sufficient number of times so that the relative standard deviation of the retention times for each peak is <5%.

7.3 Response calibration:

7.3.1 For the purposes of a Level 1 analysis, response-quantity calibration with n-decane is adequate. A 10-uL volume of n-decane is injected into a tared 10 mL volumetric flask. The weight injected is obtained and the flask is diluted to the mark with n-pentane. This standard contains about 730 ng n-decane per uL n-pentane. The exact concentration depends on temperature, so that a weight is required. Two serial tenfold dilutions are made from this standard, giving standards at about 730, 73, and 7.3 ng n-decane per uL n-pentane, respectively.

7.3.2 Procedure for response calibration: This calibration is performed at the start of an analytical program and monthly thereafter. The most concentrated standard is injected once each day. Any change in calibration necessitates a full calibration with new standards. Standards are stored in the refrigerator locker and are made up monthly.

7.3.2.1 Verify that the instrument is set up properly.

7.3.2.2 Set electrometer at 1×10^{-10} A/mV.

7.3.2.3 Inject 1 uL of the highest concentration standard.

7.3.2.4 Run standard temperature program as specified above.

7.3.2.5 Clean syringe.

7.3.2.6 Make repeated injections of all three standards until the relative standard deviations of the areas of each standard are ≤5%.

7.4 Sample analysis procedure:

7.4.1 The following apparatus is required:

7.4.1.1 Gas chromatograph set up and working.

7.4.1.2 Recorder, integrator working.

7.4.1.3 Syringe and syringe cleaning apparatus.

7.4.1.4 Parameters: Electrometer setting is 1×10^{-10} A/mV; recorder is set at 0.5 in./min and 1 mV full-scale.

7.4.2 Steps in the procedure are:

7.4.2.1 Label chromatogram with the data, sample number, etc.

7.4.2.2 Inject sample.

7.4.2.3 Start integrator and recorder.

7.4.2.4 After isothermal operation for 5 min, begin temperature program.

7.4.2.5 Clean syringe.

7.4.2.6 Return sample; obtain new sample.

7.4.2.7 When analysis is finished, allow instrument to cool. Turn chromatogram and integrator output and data sheet over to data analyst.

7.5 Syringe cleaning procedure:

7.5.1 Remove plunger from syringe.

7.5.2 Insert syringe into cleaner; turn on aspirator.

7.5.3 Fill pipet with pentane; run pentane through syringe.

7.5.4 Repeat with methylene chloride from a separate pipet.

7.5.5 Flush plunger with pentane followed by methylene chloride.

7.5.6 Repeat with methylene chloride.

7.6 Sample analysis decision criterion: The data from the TCO analyses of organic extract and rinse concentrates are first used to calculate the total concentration of C7-C16 hydrocarbon-equivalents (Paragraph 7.7.3) in the sample with respect to the volume of air actually sampled, i.e., ug/m^3. On this basis, a decision is made both on whether to calculate the quantity of each n-alkane equivalent present and on which analytical procedural pathway will be followed. If the total organic content is great enough to warrant continuing the analysis -- >500 ug/m^3 -- a TCO of less than 75 ug/m^3 will require only LC fractionation and gravimetric determinations and IR spectra to be obtained on each fraction. If the TCO is greater than 75 ug/m^3, then the first seven LC fractions of each sample will be reanalyzed using this same gas chromatographic technique.

7.7 Calculations:

7.7.1 **Boiling Point - Retention Time Calibration:** The required data for this calibration are on the chromatogram and on the data sheet. The data reduction is performed as follows:

7.7.1.1 Average the retention times and calculate relative standard deviations for each n-hydrocarbon.

7.7.1.2 Plot average retention times as abscissae versus normal boiling points as ordinates.

7.7.1.3 Draw in calibration curve.

7.7.1.4 Locate and record retention times corresonding to boiling ranges 90-100, 110-140, 140-160, 160-180, 180-200, 200-220, 220-240, 240-260, 260-280, 280-300°C.

7.7.2 **Response-amount calibration:** The required data for this calibration are on the chromatogram and on the data sheet. The data reduction is performed as follows:

7.7.2.1 Average the area responses of each standard and calculate relative standard deviations.

7.7.2.2 Plot response (uv·sec) as ordinate versus ng/uL as abscissa.

7.7.2.3 Draw in the curve. Perform least squares regression and obtain slope (uV·sec·uL/ng).

7.7.3 **Total C7-C16 hydrocarbons analysis:** The required data for this calculation are on the chromatogram and on the data sheet. The data reduction is performed as follows:

7.7.3.1 Sum the areas of all peaks within the retention time range of interest.

7.7.3.2 Convert this area (uV·sec) to ng/uL by dividing by the weight response for n-decane (uV·sec.uL/ng).

7.7.3.3 Multiply this weight by the total concentrate volume (10 mL) to get the weight of the C7-C16 hydrocarbons in the sample.

7.7.3.4 Using the volume of gas sampled or the total weight of sample acquired, convert the result of Step 7.7.3.3 above to ug/m^3.

7.7.3.5 If the value of total C7-C16 hydrocarbons from Step 7.7.3.4 above exceeds 75 ug/m^3, calculate individual hydrocarbon concentrations in accordance with the instructions in Paragraph 7.7.5.5 below.

7.7.4 **Individual C7-C16 n-Alkane Equivalent Analysis:** The required data from the analyses are on the chromatogram and on the data sheet. The data reduction is performed as follows:

7.7.4.1 Sum the areas of peaks in the proper retention time ranges.

7.7.4.2 Convert areas (uV·sec) to ng/uL by dividing by the proper weight response (uV·sec·uL/ng).

7.7.4.3 Multiply each weight by total concentrate volume (10 mL) to get weight of species in each range of the sample.

7.7.4.4 Using the volume of gas sampled on the total weight of sample acquired, convert the result of Step 7.7.4.3 above to ug/m^3.

8.0 QUALITY CONTROL

8.1 Appropriate QC is found in the pertinent procedures throughout the method.

9.0 METHOD PERFORMANCE

9.1 Even relatively comprehensive error propagation analysis is beyond the scope of this procedure. With reasonable care, peak area reproducibility of a standard should be of the order of 1% RSD. The relative standard deviation of the sum of all peaks in a fairly complex waste might be of the order of 5-10%. Accuracy is more difficult to assess. With good analytical technique, accuracy and precision should be of the order of 10-20%.

10.0 REFERENCES

1. Emissions Assessment of Conventional Stationary Combustion Systems: Methods and Procedure Manual for Sampling and Analysis, Interagency Energy/Environmental R&D Program, Industrial Environmental Research Laboratory, Research Triangle Park, NC 27711, EPA-600/7-79-029a, January 1979.

METHOD 0020

SOURCE ASSESSMENT SAMPLING SYSTEM (SASS)

1.0 PRINCIPLE AND APPLICATION

1.1 Principle

1.1.1 Particulate and semivolatile organic materials are withdrawn from a source at a constant rate near isokinetic conditions and are collected in a multicomponent sampling train.

1.1.2 Three heated cyclones and a heated high-efficiency fiber filter remove and collect the particulate material from the sample and a packed bed of porous polymeric resin adsorbs the condensible organic vapors.

1.1.3 Chemical analyses of the sample are conducted to determine the concentration and identity of the semivolatile organic species and gravimetric determinations are performed to approximate particulate emissions.

1.2 Application: This method is applicable to the preparation of semiquantitative estimates (within a factor of three) of the amounts and types of semivolatile organic and particulate materials that are discharged from incineration systems.

2.0 APPARATUS

2.1 Sampling Train: A schematic of the sampling train used in this method is given in Figure 1. This sampling train configuration is that of the Source Assessment Sampling System (SASS), as supplied by the manufacturer. Basic operating and maintenance procedures are described in the "Operating and Service Manual: Source Assessment Sampling System" supplied on purchase of the sampling system (Blake, 1977). Users should refer to this document and adopt, but not limit themselves to, its operating and maintenance procedures. The SASS train components and specifications are detailed below.

2.1.1 **Probe nozzles:** The probe nozzles are constructed of Type 316 seamless stainless steel tubing and have sharp leading edges. The nozzles are a hybrid elbow/buttonhook design, obtainable in diameters ranging from 0.31 to 1.91 cm (1/8 to 3/4 in.), and are interchangeable. Each nozzle should be calibrated according to the procedure outlined in Paragraph 7.2 of this method.

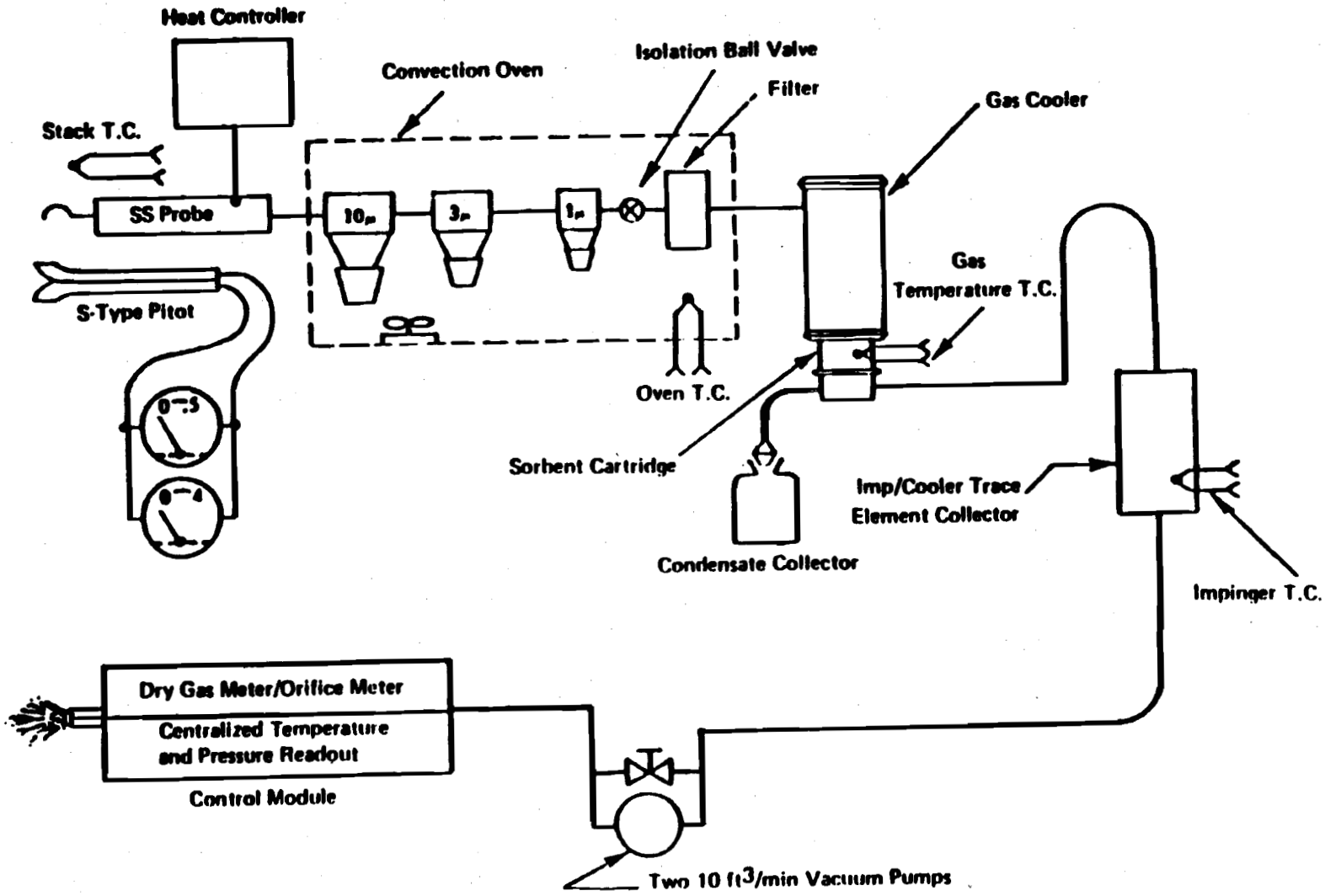

Figure 1. SASS Schematic Diagram.

2.1.2 **Probe Liner:**

2.1.2.1 The probe liner is also constructed of Type 316 seamless stainless steel tubing; attached to the liner is a proportional temperature controller capable of maintaining the liner surface temperature at 204 ± 20°C (400 ± 36°F) during sampling. The use of the proportional controller to control the liner surface temperature at the control module is preferred because the oven often cannot be reached for adjustment during sampling.

2.1.2.2 It should be noted that the measurement of the probe liner surface temperature is not an accurate measurement of the internal gas stream temperature, which is the temperature of interest. This source of error is caused by the temperature gradient that exists between the inner and outer walls of the liner. Monitoring of the actual gas stream temperature is impractical with the SASS trains as presently constructed. It is suggested that a one-time calibration be conducted in which the internal gas stream temperature is compared to the liner surface at various temperatures and at the standard SASS flow rate of 4.0 scfm.

2.1.2.3 The probe and probe liner can withstand points up to 370°C (700°F), at which temperature they will soften. However, stack temperatures greater than 288°C (550°F) may result in gas temperatures at the 10-um cyclone inlet greater than the recommended 204°C (400°F) and hence require the use of a special water- or forced-air-cooled probe.

2.1.3 **Pitot tubes:** The pitot tubes are Type S, designed to meet the specifications of EPA Method 2 (see Reference below); these are attached to the probe sheath to allow constant monitoring of the stack gas velocity. The point of attachment to the sheath is such that the impact (high pressure) opening plane of the pitots is level with or above the sampling nozzle entry plane, as required by Method 2, to eliminate nozzle interference in velocity measurements. If calibration is not required, the pitot tubes are assigned a nominal coefficient of 0.84, as described in the calibration section of this method.

2.1.4 **Differential pressure gauges:** Three Magnehelic-type gauges are used. One gauge (0 to 0.5 in. H_2O) monitors the pressure drop across the orifice meter (ΔH_i); the other two gauges (0 to 0.5 and 0 to 4.0 in. H_2O) are connected in parallel and indicate the pressure differential across the pitot tubes used for measuring stack gas velocity.

2.1.5 **Filter holder and filter support:** The filter holder and filter support screen are constructed of Type 316 stainless steel with a

Teflon gasket providing an airtight seal around the circumference. The holder is attached immediately to the outlet of the 1-um cyclone or the cyclone bypass.

2.1.6 **Cyclone/Filter heating system:** The cyclone/filter heating system is an insulated double-walled oven, capable of maintaining the temperature in the area of the cyclones and filter holder around the recommended 204°C (400°F). A chromel-alumel thermocouple for temperature sensing allows feedback control of the temperature to within approximately 10%.

2.1.7 **Cyclone train:** The cyclone train consists of three cyclone separators in series, having nominal particle-size cutoff diameters of 10, 3, and 1 um respectively. The material of construction is Type 316 stainless steel with Teflon gaskets sealing the hoods and collector cups. The compact design of the 10-um cyclone is achieved by incorporating flow-interrupting vanes in the collection cup.

2.1.8 **Organic module:** The organic module consists of a thin-film heat exchanger/gas cooler, a sorbent cartridge, and a condensate collection trap. The temperature of the heat exchanger fluid is regulated by activating an immersion heater or routing the coolant through another heat exchanger in the impinger ice water bath. Water from the impinger bath is continually circulated through the inner reservoir of the gas cooler for additional cooling capacity. The sorbent cartridge encloses the polymeric adsorbent bed in a cylinder covered on both ends by 80-mesh, Type 316 stainless steel wire cloth. The cartridge holds approximately 150 grams of XAD-2 adsorbent resin. Condensed moisture from the gas stream is collected in a reservoir located directly beneath the packed sorbent bed. The drain valve of the reservoir should be coupled with a Teflon line to an appropriately sized (1- to 5-liter) glass storage container, as the capacity of the reservoir will typically be exceeded during a run.

2.1.9 **Impinger train:** The four impingers have a capacity of approximately 3 liters each and are constructed of pyrex glass. The caps are Teflon with stainless steel fittings and the impingers are interconnected by flexible Teflon or stainless steel tubing. The first two impingers are equipped with splash guards to minimize fluid carryover and the last impinger with a thermocouple mounted in the cap for monitoring the impinger train exit gas temperature.

2.1.10 **Pump/Metering system:** Two leak-free vane-type vacuum pumps connected in parallel are used to maintain the 4.0-scfm flow in the sampling system. Vacuum and differential pressure gauges, thermocouples capable of measuring temperature to within 3°C (5.4°F) and a dry gas meter capable of measuring volume to within 2% are supplied as the other necessary components for maintaining isokinetic sampling rates.

2.1.11 **Barometer:** An aneroid barometer, or other barometer capable of measuring atmospheric pressure to within 2.5 mm Hg (0.5 in. Hg), is required, unless the barometric reading is obtained from a nearby National Weather Station; the station value (i.e., the absolute barometric pressure) must be corrected for elevation differences between the weather station and the sampling point. The corrected value should reflect a decrease of 2.5 mm Hg (0.1 in. Hg) per 30-m (100-ft) elevation increase, and vice versa for elevation decrease. (See Paragraph 7.7).

2.1.12 **Gas density determination apparatus:** The length of a SASS run is typically sufficient to determine the average gas stream density during the run. EPA Method 3 should be consulted for detailed specifications for an integrated fixed gas sampling system. Analysis of the collected samples should be performed with an ORSAT analyzer or a GC/TCD system outfitted specifically for this purpose.

2.1.13 **Calibration/Field preparation log:** For documentation of calibration and preparation procedures, a permanently bound laboratory notebook is recommended, in which carbon copies are made of the data as they are being recorded. The carbon copies should be detachable and used only for separate storage in the test program archives.

2.2 Sample recovery:

2.2.1 **Probe liner brush:** The brush must have nylon bristles, a stainless steel wire handle, and extensions of stainless steel, Teflon, or other inert material. The combined extensions must be equal to or greater than the length of the probe.

2.2.2 **Probe nozzle brush:** The brush must have nylon bristles and a stainless steel wire handle, and be properly sized and shaped for cleaning the inner surfaces of the nozzle.

2.2.3 **Cyclone and filter holder brushes:** The brushes must have nylon bristles and a stainless steel wire handle, and be properly sized for cleaning the inner walls of these components. It is strongly recommended that a separate brush be used for sample recovery from each of these components to avoid cross contamination of one particle size fraction by another.

2.2.4 **Wash bottles:** Three are needed. Teflon or glass is required to avoid contamination of organic solvents; Teflon is preferred because it is unbreakable.

2.2.5 **Glass sample storage containers:** The containers must be chemically resistant, borosilicate glass bottles, 500-mL or 1,000-mL. Screw-cap liners should be Teflon or constructed so as to be leak-free and resistant to chemical attack by organic recovery solvents (narrow-mouth glass bottles have been found to exhibit less tendency toward leakage).

2.2.6 **Petri dishes:** These must be glass and sealed around the circumference with Teflon tape for storage and transport of filter samples.

2.2.7 **Graduated cylinder and triple-beam balance:** to measure condensed water to the nearest 1 mL or 0.5 g. Graduated cylinders must have subdivisions no greater than 2 mL. Equipment made of glass must be used for measuring the volume of any solution that will be subject to organic analysis. Laboratory triple-beam balances must be capable of weighing to ±0.5 g or better.

2.2.8 **High-density linear polyethylene (HDLP) storage containers:** These are used for storage of the impingers.

2.2.9 **Plastic storage containers:** Airtight containers are necessary for storage of silica gel.

2.2.10 **Funnels:** Glass funnels must be used in recovering samples for organic analysis. Glass or plastic funnels may be used in other processes but care must be taken to segregate the two types.

3.0 REAGENTS AND MATERIALS

3.1 Filters: Glass fiber filters, 15.24 cm (6.0 in.) in diameter without organic binder, exhibiting 99.95% efficiency (<0.05% penetration) on 0.3-micron dioctyl phthalate smoke particles, conforming to the specifications outlined in ASTM Standard Method D2986-71. Test data from the supplier's quality control program are sufficient for this purpose. The filter material must also be unreactive to SO_2 and SO_3.

3.2 Adsorbent resin: Porous polymeric resin, XAD-2, is used. The resin must be cleaned prior to use. The resin must not exhibit a blank higher than 4 mg/kg of total chromatographable organics (TCO) prior to use. Once cleaned, the resin should be stored in a wide-mouth amber glass container and the headspace purged with nitrogen to limit exposure to ambient air. Resin should be used within 2 wk of preparation.

3.3 Silica gel: Indicating type, 6 to 16 mesh. If previously used, dry at 175°C (350°F) for 2 hr. New silica gel may be used as received.

3.4 Impinger solutions: Since the impinger solutions are typically used for the determination of gas-stream water-vapor content, Type II water should be used. If specific inorganic species are to be determined (e.g., hydrochloric acid when burning chlorinated organic material), then other appropriate collecting solutions (in the above example, dilute base) must be used.

3.5 Crushed ice: Commercially available. Quantities ranging from 50 to 100 lb may be necessary during a run, depending upon ambient air temperatures.

3.6 Methanol/Methylene chloride: Distilled-in-glass or pesticide-grade methanol and methylene chloride are required.

4.0 SAMPLING PROCEDURE

4.1 Sampling equipment calibration:

4.1.1 The probe tips, pitot tubes, dry gas meter, thermocouples, and any thermometers must be calibrated before and after each field sampling trip according to the procedures outlined in APTD-0576 (Rom, 1972) and below in Section 7.0. During extended sampling trips where the train will routinely be used more than 10 times, it is strongly recommended that a calibrated orifice, a set of micrometers (Vernier calipers), and a standard mercury-in-glass thermometer accompany the train to verify that the calibrations of the dry gas meter, probe nozzles, and thermocouples, respectively, have not changed significantly (more than ±2%). The aneroid barometer should be calibrated on a daily basis against a mercury barometer when in the laboratory and periodically in the field by consulting the local weather station and correcting for elevation (see Paragraph 7.7).

4.2 Laboratory preparation:

4.2.1 Weigh several 700- to 800-g portions of silica gel in airtight containers to ±0.1 g. Record the weight of the silica gel plus the container on the container and in a field sampling preparation notebook.

4.2.2 Holding with blunt-tipped tweezers, check filters visually against light for irregularities, flaws, or pinhole leaks. Label the shipping containers (glass Petri dishes) and keep the filters in these containers at all times except during sampling and weighing. The filters themselves need not be labeled if strict compliance with the above instruction is ensured. Desiccate the filters in a desiccator over Drierite or silica gel with the Petri dishes open at 20 ± 5.6°C (68 ± 10°F) and ambient pressure for at least 24 hr and weigh. Thereafter weigh at 6-hr (minimum) intervals to a constant weight, i.e., previous weight ±0.5 mg; record the weight to the nearest 0.1 mg, along with the date and time, in the field sampling preparation notebook. Alternatively, the filters may be oven-dried at 105°C (220°F) for 2 to 3 hr, desiccated for 2 hr, weighed, and weighed thereafter at 6-hr intervals to a constant weight. During each weighing, the filter must not be exposed to the laboratory atmosphere for longer than 2 min with a relative humidity greater than 50%.

4.2.3 Passivate all SASS train parts and sample storage containers, referring to the procedure that appears in Figure 2, adapted from Level I requirements. Passivation is required of all new train components and sample storage containers before their initial use in the field. Thereafter, passivation should be conducted every 6 months when the frequency of tests is once per month or less, and every 3 months when the

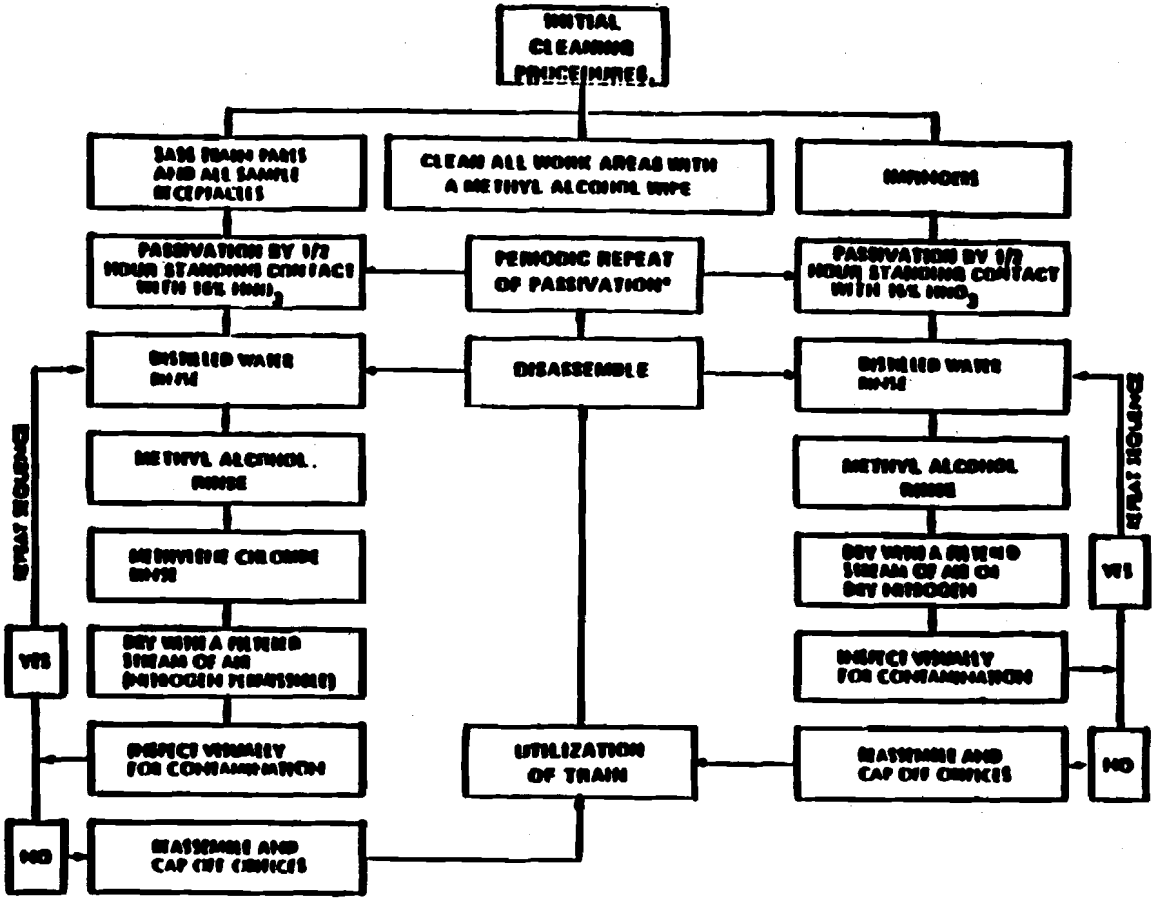

SASS Cleaning Procedures

Source: "IERL-RTP Procedures Manual: Level 1 Environmental Assessment (Second Ed.) EPA-600/7-78-201

Figure 2. SASS Cleaning Procedure

frequency is between once per week and once per month. If testing is more frequent, passivation should be conducted proportionately more often. Whenever corrosion has occurred, the corrosion must be removed and the passivation repeated. The passivation and rinse solutions should be replaced every fourth use, or discarded weekly.

4.2.4 Prepare recycled sample containers by detergent washing (using a stiff nylon brush where necessary), followed by rinsing with Type II water, methanol and methylene chloride. As each part is treated with the final solvent, dry with filtered air or dry nitrogen and inspect for any contaminating residue. Discard any container exhibiting visual contamination. Cover all open surfaces with aluminum foil or Teflon film, using elastic bands to secure.

4.2.5 Assembly and leak-checking of the entire train in the laboratory is highly recommended to reveal the need for replacement of gaskets or defective components. The leak-check procedure is described in Paragraph 4.4.3.11. Substitution of Viton-A gaskets for Teflon may facilitate meeting the allowable leak rate. A length of Teflon tape stretched around the circumference of each flanged connection underneath the ring clamp also greatly reduces inward air leakage.

4.3 Preliminary field determinations:

4.3.1 Select the sampling site and remove any accumulated scale and corrosion from the sampling portholes. Determine the stack static pressure, temperature, and velocity profile using EPA Method 2 (see References); a leak-check of the pitot lines prior to conducting these measurements is highly recommended. Approximate the moisture content using EPA Method 4 (Approximation Method) or alternate means such as drying tubes, wet bulb/dry bulb or condensation techniques, stoichiometric calculations, or previous experience. Determine the dry molecular weight of the stack gas by performing an ORSAT or GC/TCD analysis for CO, CO_2, O_2 and N_2 on an average of three grab samples taken from either the center of the duct or a point no closer to the stack walls than 1.0 m (3.3 ft).

4.3.2 Select a nozzle size based upon the calculations below, ensuring that it will not be necessary to change the nozzle during the sampling run to maintain near-isokinetic sampling rates.

4.3.2.1 To calculate the required nozzle diameter, first calculate the Average Stack Gas Velocity:

$$(V_s)_{avg} = K_p C_p (\sqrt{(\Delta P)})_{avg} \left[\sqrt{\frac{(T_s)_{avg}}{P_s M_s}} \right]$$

where:

$(V_s)_{avg}$ = Average stack gas velocity, ft/sec;

$$K_p = 85.48 \left[\frac{ft}{sec} \left[\frac{(lb/lb\text{-}mole)(in.\ Hg)}{°R(in.\ H_2O)} \right]^{1/2} \right];$$

C_p = Pitot tube coefficient, dimensionless;

ΔP = Velocity head of stack gas, in. H_2O;

$(T_s)_{avg}$ = Average stack gas temperature, °R;

P_s = Absolute stack gas pressure, in. Hg; and

M_s = Molecular weight of stack gas (wet basis), lb/lb-mole.

4.3.2.2 Then calculate the required <u>Nozzle Diameter</u> (D_n):

$$D_n = 0.831 \sqrt{\frac{(T_s)_{avg}}{(V_s)_{avg}\ P_s}}$$

4.3.3 Select a suitable probe length such that one or more points of average velocity can be sampled. Determine the total length of sampling time by comparing the anticipated average sampling rate to the volume requirement of 30 dscm (approximately 1,060 dscf).

4.3.3.1 The anticipated <u>Average Sampling Rate</u> is calculated as follows:

$$Q_{mo} = (1-B_{ws})Q_{st} \frac{P_{st}\ (T_m)_{avg}}{P_m\ (T_{st})}$$

where:

Q_{mo} = Flow rate through orifice at meter conditions, ft^3/min (dry);

B_{ws} = Volume fraction of water vapor in the gas stream, dimensionless;

Q_{st} = Design sampling flowrate for SASS train, 4.0 scfm;

P_{st} = Standard presssure, 29.92 in. Hg;

$(T_m)_{avg}$ = Average gas temperature (estimated) at the dry gas meter, °R;

P_m = Absolute meter pressure, in. Hg, calculated by

$$P_m = P_b + \frac{(\Delta H)_{est.avg.}}{13.6}$$

where:

$(\Delta H)_{est.avg.}$ = Estimated average ΔH across orifice, 3-4 in. H_2O, and

P_b = Barometric pressure (corrected), in. Hg; and

T_{st} = Standard temperature, 528°R.

None of these definitions has an English/metric equivalent.

4.3.3.2 Using this result, obtain the approximate sampling time by dividing the required sample volume by the estimated sampling flowrate.

4.3.4 Finally, calculate the Orifice Pressure Drop needed to maintain near-isokinetic sampling conditions from the equation:

$$\Delta H_i = \frac{P_m}{(T_m)_{avg}} \left[\frac{0.1924\ Q_{mo}}{J_i D_{oi}^2}\right]^2$$

where:

ΔH_i = Required ΔH across the orifice, in. H_2O;

P_m = Absolute meter pressure, in. Hg (calculated the same way as for Average Sampling Rate above);

$(T_m)_{avg}$ = Estimated average gas temperature at the dry gas meter, °R;

J_i = Orifice coefficient for orifice "i" (see Blake, 1977, and Section 7.0 of this method for determining orifice coefficients); and

D_{oi} = Orifice diameter, in. (information supplied upon purchase of the SASS train; the largest diameter orifice is typically best suited for the SASS sampling rate of 4.0 scfm).

4.3.5 It is desirable, but not required, to sample more than one point of average velocity during a SASS run. Allocate equal intervals of the total sampling time estimated above to each sampling point chosen if more than one point will be sampled.

4.4 Preparation of collection train:

4.4.1 An integral part of preparing the collection train is securing sufficient electrical power to operate for an extended period of time without interruption. Three separate circuits -- two 30-amp and one 20-amp -- are required. It is highly recommended that one sampling pump and one control box power cord (probe heater) be placed on one of the 30-amp circuits, and the other sampling pump and control box power cord (oven heater and temperature readout) be placed on the other 30-amp circuit. The organic module coolant pump and temperature controller should be placed on the smaller 20-amp circuit.

4.4.2 During assembly of the train, keep the inner surfaces of each component covered until it is integrated into the system and sampling is about to begin. Fill the sorbent trap section of the organic module with approximately 150 g of clean adsorbent XAD-2 resin. To avoid contamination, the trap should be placed upon a clean surface (i.e., aluminum foil rinsed with methylene chloride and air-dried) while filling; gloves should be worn. Pack the trap uniformly to eliminate potential channeling. Place 500 mL of Type II water or other appropriate solution into the first and second impingers, leave the third impinger empty, and place a preweighed portion of silica gel into the fourth.

NOTE: The choice of impinger solutions depends upon whether these will be used to collect selected inorganic species or simply to condense water vapor from the gas stream to measure percent moisture. For example, in an incinerator combusting chlorinated organic material, a solution of dilute base would typically be used to collect hydrochloride acid emissions.

Using blunt-tipped tweezers, place a tared filter into the filter holder. Ensure that the filter is centered and the gasket properly placed to prevent the gas stream from circumventing the filter. On the probe, mark the locations of the chosen sampling points with heat-resistant tape or paint.

4.4.3 The stepwise procedure for assembly of the train follows:

4.4.3.1 Place the oven on a table or rollers that will be used as a support throughout the run.

4.4.3.2 Assemble the three cyclones, using the vortex breaker supplied with the cyclone in the 10-um cyclone only. (To minimize leaks throughout the system, a strip of Teflon tape should be stretched around the circumference of each flanged seal and the ring clamp placed over and secured.) Do not use the vortex breakers supplied with the 3- and 1-um cyclones in the 3- and 1-um cyclones. Actual calibration data has shown that the use of the vortex breakers in the two smaller cyclones may result in unreproducible particle-size cutoff diameters (the particle size at which 50% collection efficiency is exhibited).

4.4.3.3 Attach the filter holder to the outlet of the 1-um cyclone and place the cyclones and filter holder together in the oven. Preheat a spare filter holder containing a tared filter on the oven floor; cover the holder openings with aluminum foil.

4.4.3.4 Attach the probe to the oven and to the 10-um cyclone.

4.4.3.5 Place the impingers in the tray in the impinger case and make the apropriate interconnections.

4.4.3.6 Connect the organic module inlet to the filter housing outlet and the organic module outlet to the first impinger inlet.

4.4.3.7 Connect the vacuum pumps in parallel to the fourth impinger outlet.

4.4.3.8 Connect all temperature sensors and power lines to the control unit. Check temperature indicators and controllers at ambient temperature.

4.4.3.9 Activate gas cooling system. Begin monitoring the XAD-2 temperature. Always check coolant level before supplying power. Ensure proper gas cooling system temperature before proceeding.

NOTE: IT IS EXTREMELY IMPORTANT THAT THE XAD-2 RESIN TEMPERATURE NEVER EXCEED 50°C, AS DECOMPOSITION WILL OCCUR. DURING TESTING, THE XAD-2 TEMPERATURE MUST NOT EXCEED 20°C FOR EFFICIENT CAPTURE OF THE SEMIVOLATILE ORGANIC SPECIES OF INTEREST.

4.4.3.10 Heat oven and probe to 204°C (400°F).

4.4.3.11 Run gas flow leak-check. The following instructions will facilitate the leak-checking procedure:

a. Open the isolation ball valve and plug the inlet to the probe with a rubber stopper or appropriate airtight cap.

b. Start the pumping system with the bypass valves fully open and the coarse valves completely closed. Partially open the coarse valves and slowly close the bypass valves until a vacuum of 127 mm Hg (5 in. Hg) is reached. Do not reverse the direction of the bypass valves as backflushing of the impinger solutions into the organic module will result. If the desired vacuum is exceeded, either leak-check at the higher vacuum or terminate the leak-check and begin again. Allow the system to equilibrate and measure the leakage rate. The allowable leak rate for the SASS train is 0.0014 m^3/min (0.05 ft^3/min) at this vacuum. Close the isolation ball valve and evacuate the train to 281 mm Hg (15 in. Hg). The leak rate through the back half of the train should be less than 0.0014 m^3/min (0.05 ft^3/min) at this vacuum.

c. When the leak-check is complete, slowly remove the plug from the probe tip and then slowly open the isolation ball valve.

d. When the vacuum drops to 127 mm Hg (5 in. Hg) or less, immediately close both coarse control valves together. Switch off the pumping system and reopen the bypass valves. The bypass valves should not be opened until the coarse valves have been closed.

4.4.4 Only post-test leak-checks are mandatory; however, experience has shown that pre-test leak-checks and leak-checks following component changes are necessary to ensure that invaluable sampling time is not lost as a result of an oversight or defective component.

4.5 Sample Collection: Constant monitoring of train operations before, during, and after the particulate run is essential in maintaining sample integrity. Listed below are sample collection guidelines:

4.5.1 With the coarse valves closed and bypass valves open, turn on the vacuum pumps and allow them to warm up. As the probe and oven are heating, prepare a SASS run data sheet as shown in 40 CFR Appendix A (see References below). Barometric pressure data should be recorded at least at the beginning and end of the run; once per hour is preferred.

4.5.2 When operating temperatures have been reached, place the probe in the stack at the first designated sampling point, turn on the vacuum pumps, adjust the sampling flowrate to achieve the calculated ΔH_i, and start the elapsed timer. If, however, the gas stream is under medium or high negative pressure, it becomes extremely important to start the vacuum pumps just before placing the probe in the gas stream, and to continue to operate the pumps until just after the probe has been removed from the gas stream. This will eliminate the possibility of lifting of the filter or backflushing of the filter and cyclone particulate catches at any time.

4.5.3 Seal the sampling port around the probe to prevent introduction of dilution air at this point. Record the clock time of the start of the test.

4.5.4 Using the criteria outlined above under Paragraph 4.3, Preliminary Field Determination, place the integrated fixed gas bag or bulb sampling probe into the gas stream and begin sampling. Collect three samples during the SASS run; record the initial and final clock times of each integrated fixed gas sample.

4.5.5 Monitor and maintain all temperatures and the calculated ΔH and record the data at equal intervals of 10-15 min.

4.5.6 Add crushed ice to the impinger section and drain excess water as necessary.

4.5.7 Without interrupting sampling, drain the condensate initially every 30-45 min, and afterward as necessary. Ensure that the vessel into which the reservoir is drained forms an airtight system with the reservoir using a connecting Teflon line, and is placed well below the level of the reservoir itself. To drain the reservoir, close the solation ball valve and open the drain valve. Allow the system to evacuate for 10-20 sec. Carefully open the isolation valve. The condensate should siphon from the reservoir into the storage vessel. Close the drain valve when the siphoning action of the condensate ceases.

4.5.8 Replace the filter when it becomes impossible to maintain near-isokinetic sampling rates but not more frequently than every 20 to 30 min. Always terminate and initiate sampling by adjustment of the coarse pump valves and then the bypass valves. A spare filter holder and filter, if available, should be preheating in the oven at all times. Conduct leak-checks before and after changing the filter. Recall previous instructions concerning removal and reintroduction of the probe into the duct.

4.5.9 At the same time, check the 1-um cyclone reservoir for remaining capacity, taking care not to contaminate the contents during this inspection.

4.5.10 When replacing a filter, start and stop the fixed gas sampling concurrently with the SASS sampling; record the clock time and dry-gas-meter reading whenever sampling is interrupted.

4.5.11 Upon collection of the required 30 dscm (1,060 dscf), remove the probe from the gas stream and shut down the pumps as previously instructed. Record the final dry-gas-meter reading and clock time; turn off all heaters. Conduct the post-test leak-check when the probe tip can be safely handled. Do not cap the probe while initially cooling, because this will create a vacuum inside that will cause disruption of the cyclone and filter particulate catches when it is released. Instead, use aluminum foil to cover probe openings. Before the probe is transported, secure the aluminum foil covers with elastic bands. Leak-check the pitot lines per EPA Method 2 to validate velocity heat data.

5.0 SAMPLE RECOVERY

The sample handling and transfer procedures outlined in this section have been adopted from the Level 1 procedures. The flow diagrammatic representation of the sample recovery procedures shown in Figures 3, 4, and 5 can be found in the Level 1 Sampling and Analysis Procedures Manual.

5.1 Disassembly of the SASS Train: At the conclusion of the sampling run, the train is disassembled and transported to the prepared work area as follows:

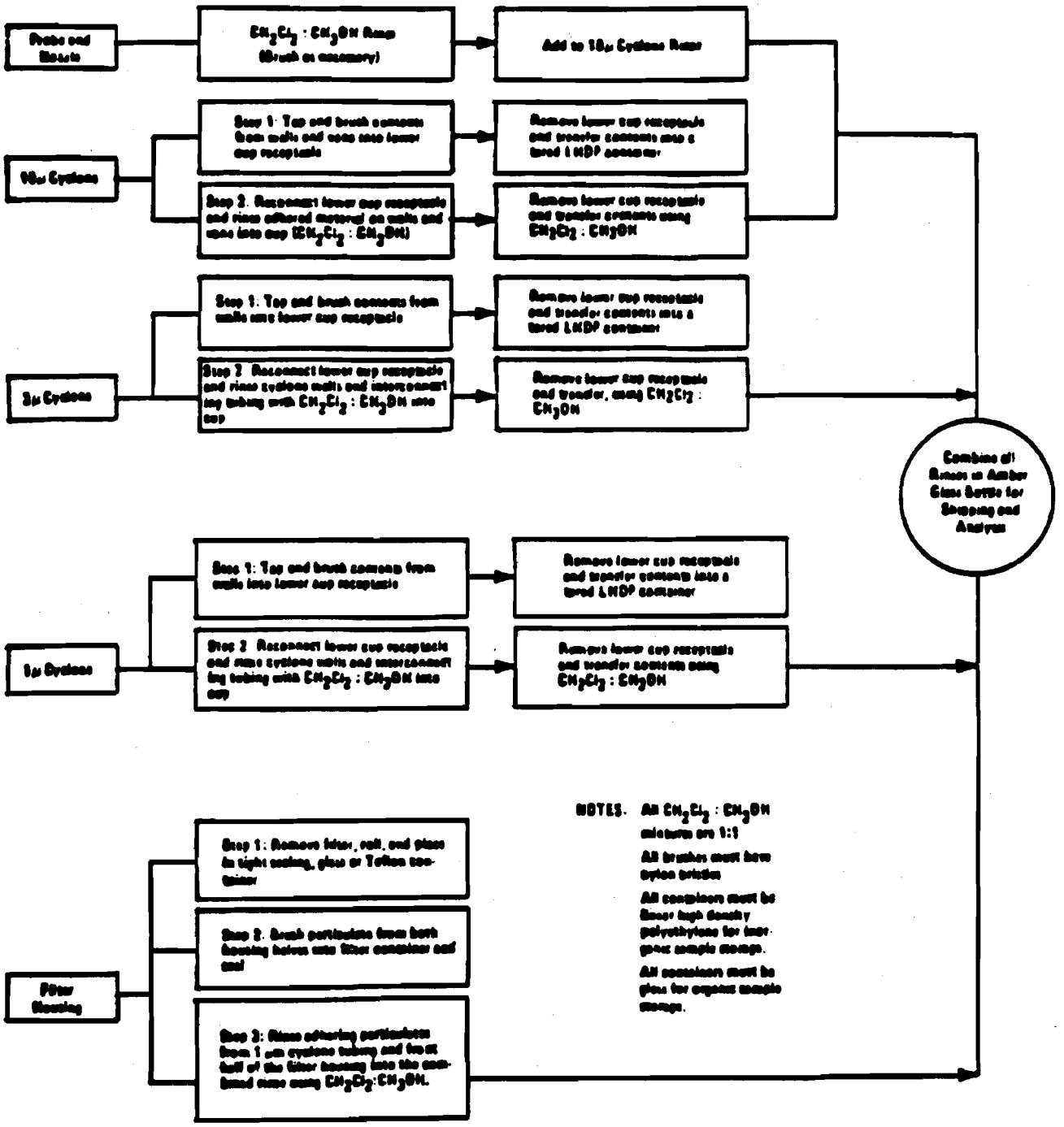

Figure 3. Sample Handling and Transfer Nozzle, Probe, Cyclones and Filter.

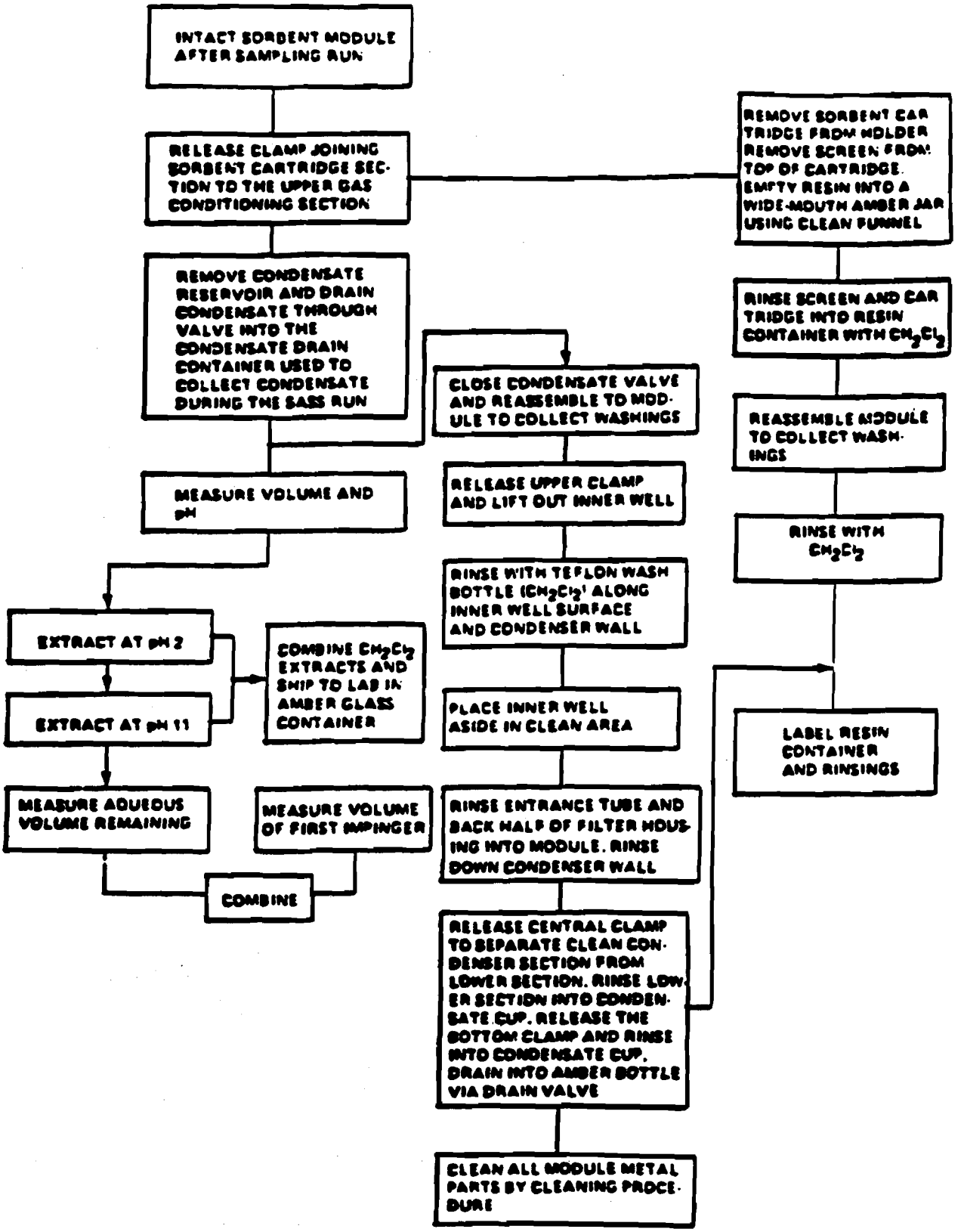

Figure 4. Sample Handling and Transfer XAD-2 Module.

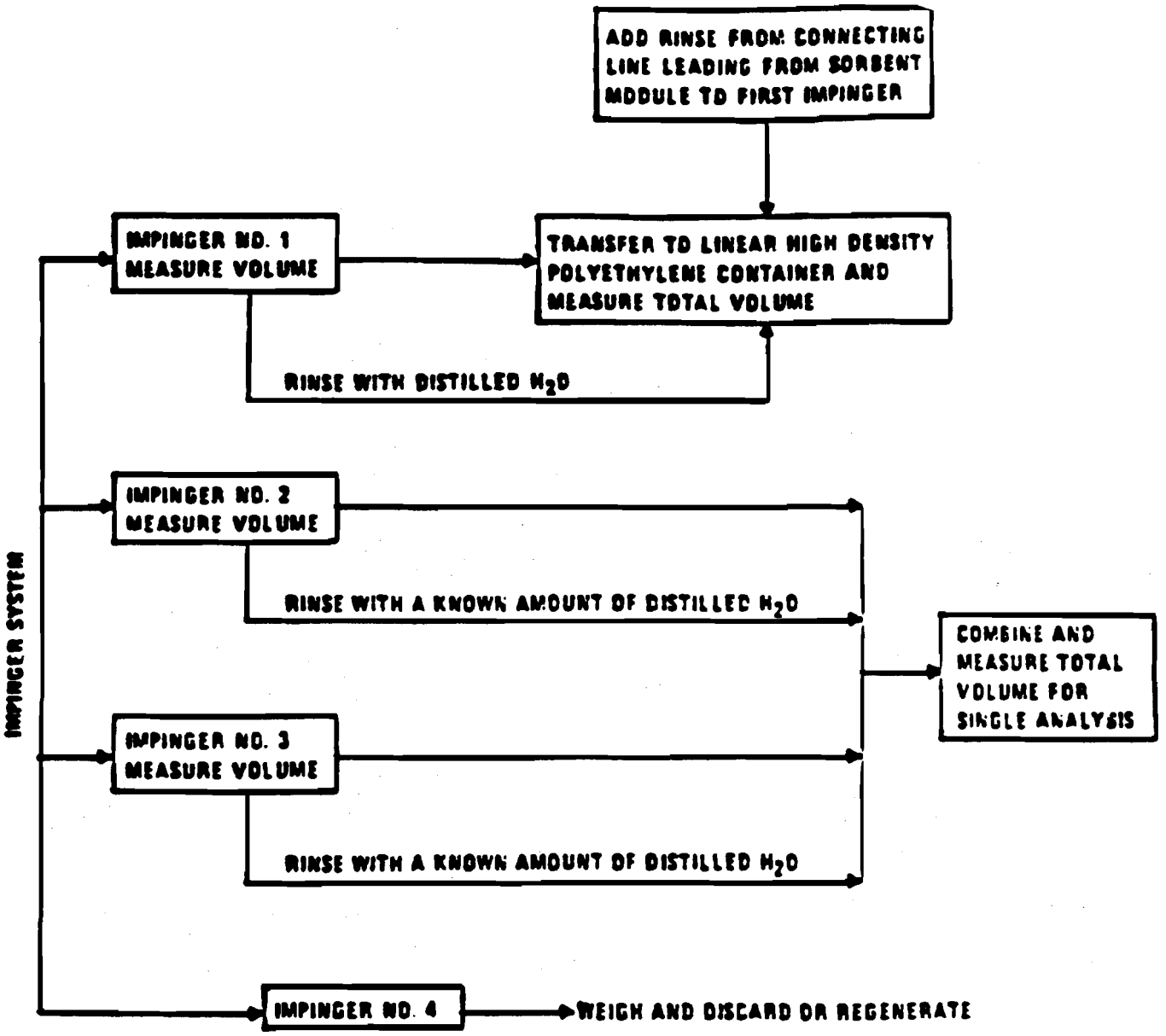

Figure 5. Sample Handling and Transfer Impingers.

5.1.1 Leaving the fan operating, open the cyclone oven door to expedite cooling. When the probe can be safety handled, disconnect from the 10-um cyclone inlet. Wipe off external particulate matter near the probe tip and place a cap over each end. The probe must remain level throughout this procedure.

NOTE: CARE MUST BE TAKEN TO AVOID TIGHTLY CAPPING TRAIN COMPONENTS AS THEY ARE COOLING FROM STACK OR OVEN TEMPERATURES. THIS WILL ELIMINATE THE POSSIBILITY OF CREATING A VACUUM INSIDE WHICH, WHEN RELEASED, MAY DISRUPT AND BACKFLUSH THE CYCLONE AND FILTER PARTICULATE CATCHES INTO ONE ANOTHER.

5.1.2 Disconnect the line joining the filter outlet to the XAD-2 module and cap off:

a. The 10-um cyclone inlet;

b. The filter holder outlet; and

c. The inlet of the line just disconnected from the filter holder outlet.

5.1.3 Disconnect the filter holder and cap the inlet. Set aside with the inlet facing upward. Cap the outlet of the 1-um cyclone. The cyclones must remain upright throughout this procedure. The cyclones can now be disconnected from one another or moved to the recovery area as a single unit.

5.1.4 Disconnect the line joining the XAD-2 module to the impinger system at the organic module outlet. Cap the organic module outlet.

5.1.5 Disconnect the silica gel impinger outlet from the vacuum line to the pumps; cap off the first impinger inlet and the fourth impinger outlet.

5.2 Nozzle, Probe, Cyclones, and Filter: The step-by-step procedures for the recovery of particulate material collected in the nozzle, probe, and cyclones, and on the filter are detailed below:

5.2.1 Carefully transfer the filter from the filter housing to its original glass Petri dish; a pair of clean blunt-tipped tweezers and a flat spatula should be used for handling the filter. Using a clean nylon-bristled brush, add any particulate material from the front half of the filter housing to the Petri dish; seal the Petri dish around the circumference with 1-in.-wide Teflon tape; store with the collected particulate material facing upward.

5.2.2 Tap and brush any particulate material adhering to the walls of the upper chamber of the 1-um cyclone into the lower cup; remove the cup and quantitatively transfer the bulk contents to a wide-mouth amber glass jar. Rinse the brush with methanol/methylene chloride (1:1 v/v) into the probe rinse container.

5.2.3 Recover the contents of the 3-um cyclone in the same manner, using a separate wide-mouth amber glass jar.

5.2.4 Recover the contents of the 10-um cyclone in the same manner, using a separate wide-mouth amber glass jar.

5.2.5 Reconnect the lower cups of each cyclone and rinse any particulate material adhering to the walls down into the cups with the methanol/methylene chloride mixture until the walls appear clean. Remove the lower cups and transfer the contents to the probe rinse container. Rinse the interconnecting tubing among the cyclones into the probe rinse in the same manner.

5.2.6 Carefully remove the probe nozzle and clean the inside surface by rinsing with the methanol/methylene chloride (1:1 v/v) from a wash bottle and brushing with a nylon-bristle brush. Brush until the rinse shows no visible particles; make a final rinse of the inside surface.

5.2.7 Rinse the probe liner (preferably with two people so as to minimize the possibility of accidental sample loss) with methanol/methylene chloride (1:1 v/v) by tilting and rotating while spraying solvent into the upper end and allowing the lower end to drain into the sample container. Follow rinsing with brushing and rinsing from the upper to the lower end. Push the brush through the liner with a twisting action; ensure that the sample container is placed under the lower end. Brush until the rinse appears clean; perform a final rinse. Inspect the inner surface of the liner for cleanliness. Rinse any particulate material remaining on the brush into the sample container.

5.2.8 Clearly label all containers according to the coding scheme given in Table 1; cover each label completely with transparent tape; mark liquid levels and store all liquid samples on ice.

5.3 <u>XAD-2, condensate, and organic module</u>: Sample recovery of the entire organic module may be conducted independently from the previous steps. The step-by-step procedure for recovery of this stage is given below:

5.3.1 Rinse a 1-ft x 1-ft square of aluminum foil (dull side) with methylene chloride and allow to air dry.

5.3.2 Release the clamp joining the XAD-2 cartridge section to the upper gas conditioning system (second clamp); remove the XAD-2 cartridge from the holder and place upon the clean aluminum foil. GENTLY pry loose or unscrew (depending upon the design) the ring securing the fine mesh screen on the top of the cartridge. Remove the screen and quantitatively transfer the XAD-2 to a clean glass amber jar. A large, clean glass funnel should be used for the transfer. Rinse the inner surfaces of the cartridge and the funnel with methylene chloride as necessary to remove adhering XAD-2. Any XAD-2 that escapes onto the aluminum foil should be retrieved and added to the sample.

TABLE 1. SUGGESTED FORMAT FOR SAMPLE CODING AND IDENTIFICATION

Sample Code	Container	Size	Sample description
1C	Amber glass	100 mL, wide-mouth	1-m cyclone catch
3C	Amber glass	100 mL, wide-mouth	3-m cyclone catch
10C	Amber glass	100 mL, wide-mouth	10-m cyclone catch
PF-a,b,c,...	Glass Petri dish	>6-in. diam.	Particulate filter(s)
PR	Amber glass	1 liter	Methylene chloride/ methanol front-half rinse
PRB	Amber glass	500 mL	Methylene chloride/ methanol blank
MRX	Amber glass	1 liter	Methylene chloride back half rinse
MRXB	Amber glass	500 mL	XAD-2 resin blank
CD-LE	Amber glass	1 liter	Methylene chloride condensate extract
CD-LEB	Amber glass	500 mL	Methylene chloride blank
AR-I1	HDLP[a]	1 liter	Aqueous residue of condensate combined with first impinger catch
I1B	HDLP	500 mL	First impinger blank (distilled H_2O or other appropriate solution)
I23	HDLP	1 liter	Second and third impinger catches
I23B	HDLP	500 mL	Second and third impinger blank (distilled H_2O or other appropriate solution)

[a]HDLP = High Density Linear Polyethylene.

5.3.3 Replace the screen on the cartridge, reinsert the cartridge into the module, and reassemble the module. One person can accomplish this task by butting the lower section in its proper sealing position up against the upper section while securing the ring clamp. One or more wooden spacers approximately 1/2 in. thick are suggested for this purpose.

5.3.4 Open the condensate reservoir valve and drain the remaining condensate into the condensate storage container. Measure and record the volume and pH (using narrow-range pH paper) of the entire condensate.

5.3.5 Transfer the entire condensate to an appropriately-sized separatory funnel. Adjust the pH of the condensate (as indicated by the narrow-range pH paper) to 1-2 using ultrapure or reagent grade nitric acid. Extract the condensate three times with methylene chloride, each time with fresh portions measuring 8-10% of the total condensate volume. If the volume of the condensate is extremely large (>1800 mL), the condensate may be extracted in portions, but fresh volumes of methylene chloride must be used for each and every extraction. After each addition of methylene chloride to the separatory funnel, the funnel must be shaken with periodic venting through the stopcock to relieve any vapor pressure. For safety, the tip of the separatory funnel should <u>always</u> be directed away from the face and eyes while venting. When no further vapor pressure can be vented after shaking, the funnel should be mounted upright on a ring stand, the cap removed, the layers allowed to separate, and the methylene chloride (bottom) layer removed. If an emulsion forms equal to more than one-third the size of the solvent layer, reagent-grade sodium chloride should be added until the emulsion is broken or reduced to meet the above criterion. The emulsion interface should <u>not</u> be included as part of the methylene chloride extract.

5.3.6 Following the third extraction of the acidified condensate, adjust the pH of the aqueous residue to 11-12 with a 50% w/w solution of sodium hydroxide (as indicated by narrow-range pH paper), extract with methylene chloride in the same manner, and combine the methylene chloride extracts of the condensate at the high and low pH readings.

5.3.7 Transfer the aqueous residue from this extraction to a clean Nalgene container; retain for later addition of the first impinger solution.

5.3.8 Ensure that the condensate reservoir valve is closed, release the upper clamp, and lift the inner well halfway out of the module. Rinse the inner well into the XAD-2 module using a Teflon wash bottle containing methylene chloride, so that the rinse travels down the module and into the condensate collector. Then remove the well entirely and place to one side on a clean surface (aluminum foil prerinsed with methylene chloride). Rinse the entrance tube into the module interior; rinse the condenser wall allowing solvent to flow down through the system and collect in the condensate cup.

5.3.9 Release the central clamp again and separate the lower section (XAD-2 cartridge holder and condensate cup) from the upper.

5.3.10 Lift the empty XAD-2 cartridge halfway out of the mid-section and rinse the outer surface down into the condensate cup. Remove the cartridge completely to a clean surface (aluminum foil rinsed with methylene chloride).

5.3.11 Rinse the empty XAD-2 section into the condensate cup. Open the condensate reservoir valve and drain into the XAD-2 sample storage container (wide-mouth amber glass jar).

5.3.12 Rinse the condensate reservoir and combine the rinse with the XAD-2 resin as above.

5.3.13 Clearly label all containers according to the coding scheme presented in Table 1; cover each label completely with transparent tape; mark liquid levels and store all liquid samples on ice.

5.4 Impingers: Sample recovery from the impingers may also be accomplished independently of the other two sections of the SASS train. The procedures are described below.

5.4.1 First impinger:

5.4.1.1 Measure the volume of liquid in the impinger with a graduated cylinder; combine with the aqueous residue from the condensate.

5.4.1.2 Rinse the line connecting the XAD-2 module to the first impinger with Type II water; transfer the rinse to the same graduated cylinder. Rinse the impinger twice more with Type II water, combining all rinses in the graduated cylinder. Measure the total rinse volume and add to the sample. Rinse the graduated cylinder with a known amount of Type II water and add to the sample. Record all volumes on the sample recovery sheet.

5.4.2 Second and third impingers:

5.4.2.1 Measure and record the combined volume of liquid in the impingers in a large (1,000-mL) graduated cylinder; transfer to a clean sample storage container.

5.4.2.2 Rinse the line connecting the first and second impinger into the second impinger and the line connecting the second and third impinger into the third impinger. Transfer the rinses to the same graduated cylinder. Rinse each impinger twice again with Type II water, combining all rinses in the graduated cylinder. Measure and record the combined rinse volume and add to the sample. Rinse the graduated cylinder with a known amount of Type II water and add to the sample. Record this additional rinse volume and add to the impinger rinse volume above.

5.4.2.3 Clearly label all sample containers according to the coding scheme presented in Table 1; cover each label completely with transparent tape; mark fluid levels and store all liquid samples on ice.

5.4.3 **Fourth impinger:**

5.4.3.1 Transfer the silica gel to its original container. Weigh to the nearest 0.1 g on a triple-beam balance, and record the weight.

5.4.3.2 Discard or regenerate.

6.0 SAMPLE PREPARATION FOR SHIPMENT

6.1 Prior to shipment, recheck all sample containers to ensure that the caps are securely tightened. Seal the lids of all Nalgene containers around the circumference with vinyl tape and those of glass containers with Teflon tape. Ship all liquid samples on ice and all particulate filters with the particulate catch facing upward. Ship peroxide solutions (impinged) in a separate container.

7.0 CALIBRATION

7.1 All calibration results should be recorded on appropriate data sheets and fastened securely into a separate section in the field sampling notebook. Samples of blank data appear in 40 CFR 60 (1979), Appendix A.

7.2 Probe nozzles:

7.2.1 Probe nozzles must be calibrated before each initial use in the field. Using Vernier calipers or micrometers, measure the inside diameter of the nozzle to the nearest 0.025 mm (0.001 in.). Perform ten separate measurements using different diameters; obtain the average of the ten measurements. The difference between the highest and lowest measurement results must not exceed 0.1 mm (0.004 in.). When nozzles become nicked, dented, or corroded, they must be reshaped, sharpened, and recalibrated before reuse. Recalibration of the nozzle before each run in gas streams that are highly corrosive is strongly recommended, as the nozzle diameter may be changing slightly from one run to the next. Each nozzle must be permanently and uniquely engraved.

7.3 Pitot tube

7.3.1 If the Type-S pitot tube conforms to the construction specifications (the face openings are not visibly nicked, dented, or corroded) and the pitot tube/probe assembly meets the intercomponent spacings outlined in EPA Method 2 (see References), the pitot tube need not be calibrated to meet federal and many state testing requirements; a correction coefficient may be assigned in these cases. Some states, however, require that, once used, pitot tubes must be calibrated in a

wind tunnel. Specific state requirements such as this must be unequivocally stated prior to testing. In either case, pitot tube face openings should be inspected before each run to ensure that there has been no change in appearance since their construction or most recent calibration.

7.4 Metering system:

7.4.1 Before each initial use in the field, the metering system shall be calibrated using a standard bell prover of the proper size. (A standard bell prover is recommended for this procedure because the displacement volume of commercially available wet test meters is typically insufficient.) A meter stick should be used to indicate the distance travelled by the inner tank during the measurement. Figure 6 illustrates a suitable arrangement for the calibration. It is highly recommended that the dry gas meter be adjusted until the ratio of the dry gas meter volume to the standard bell prover volume equals 1.00 $\pm$ 0.01, to ensure that the calculated ΔH_i will result in near-isokinetic sampling rates. The calibration procedure follows:

7.4.1.1 Perform both a positive (pressure) and a negative (vacuum) leak-check of the metering system. For the negative leak-check, include only the orifice Magnehelics (reg. trademark), dry gas meter, and two vacuum pumps by removing the vacuum line connecting the fourth impinger to the vacuum pumps at the common side of the pump inlet tee, and replacing the line with a plain-end male quick connect. Tightly cap this end and leak-check in the manner outlined above under 4.4.3.11. For the positive leak-check, connect a short length of rubber tubing to the "gas exhaust" port on the SASS control module. Disconnect and vent the low side of the orifice magnehelic; close off the low-side orifice tap. Pressurize the system to 13-18 cm H_2O (5-7 in. H_2O) by blowing into the rubber tubing; pinch off the tubing and observe the magnehelic for one minute. The magnehelic reading must remain unchanged during that time period. Any loss of magnehelic pressure indicates a leak that must be corrected.

7.4.1.2 Upon obtaining satisfactory leak-checks, connect the metering system to the standard bell prover.

7.4.1.3 Using the control box Magnehelic (reg. trademark) indicator, set the pumping rate corresponding to a ΔH of 1 in. Hg. Turn the pumps off using the switches.

7.4.1.4 Record the initial temperature and pressure of the bell prover and the initial temperature and reading of the dry gas meter. Record the barometric pressure every hour.

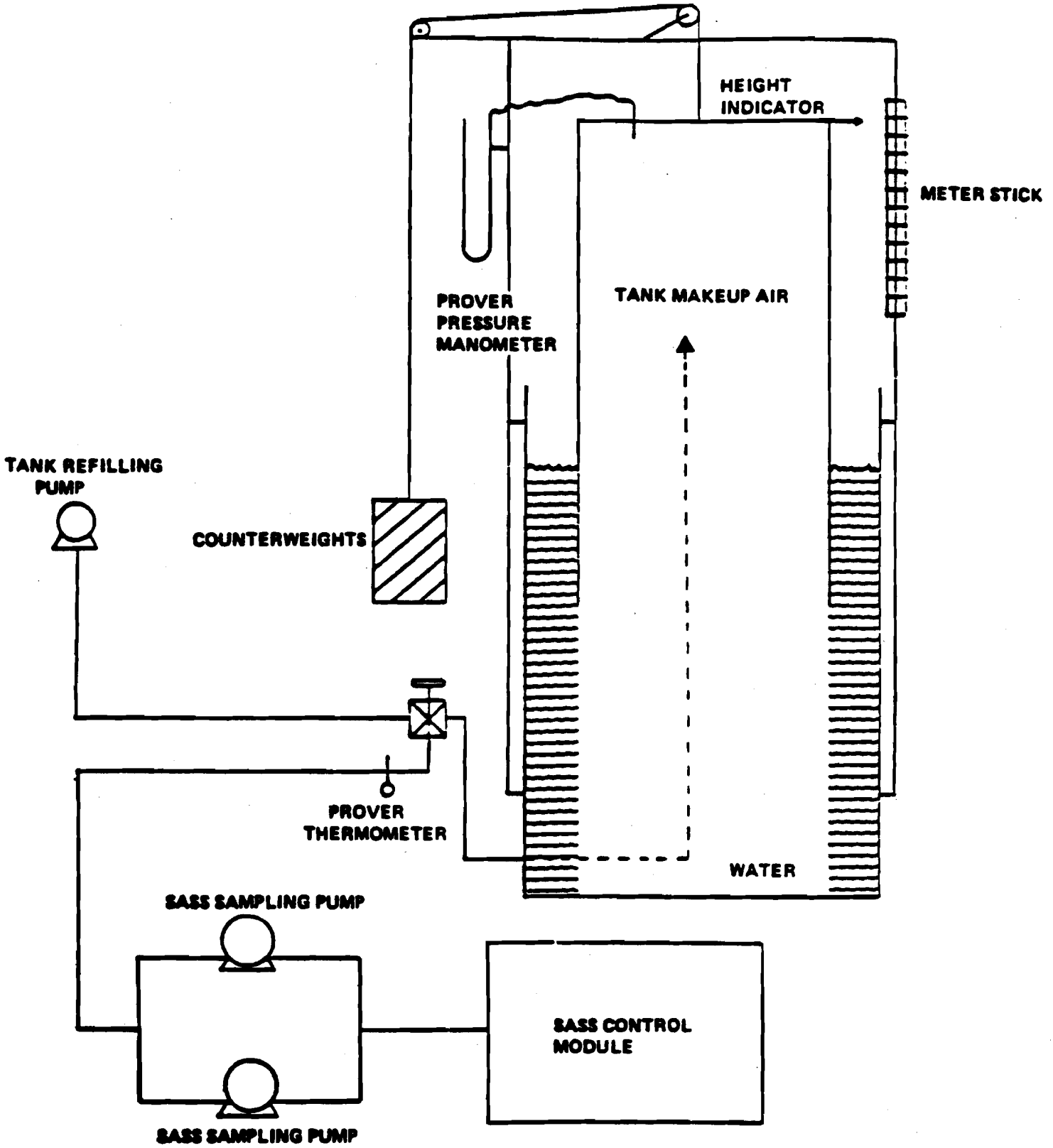

Figure 6. Schematic Diagram of Standard Bell Prover Arrangement for SASS Dry-Gas-Meter Calibration.

7.4.1.5 Disconnect the metering system and pump the inner tank of the bell prover to a convenient height. Reconnect the metering system and record the height.

7.4.1.6 Start the pumps and a stopwatch simultaneously; evacuate the tank for 3 min.

7.4.1.7 After 3 min, turn off the pumps using the switches. Record the final inner tank height, the final dry gas meter reading and temperature, and the bell prover final temperature and pressure.

7.4.1.8 Repeat steps 3-7 using ΔH settings of 2, 4, and 6 in. H_2O.

7.4.1.9 Duplicate the entire procedure as a check; repeat the entire procedure after each adjustment of the dry gas meter.

7.4.1.10 Calculate the Dry-Gas-Meter Correction Coefficient, the ratio of the volume of gas measured by the dry gas meter to the standard bell prover, both corrected to standard conditions and on a dry basis. The ratio reduces to:

$$\gamma = \frac{V_{pvr(std)}}{V_{dgm(std)}} = \frac{V_{pvr} P_{pvr} T_{dgm}}{V_{dgm} P_{dgm} T_{pvr}}$$

where:

γ = Dry gas meter correction coefficient, dimensionless;

$V_{dgm(std)}$ = Volume of gas measured by the dry gas meter on a dry basis, corrected to standard conditions, dscm (dscf);

$V_{pvr(std)}$ = Volume of gas measured by the standard bell prover on a dry basis, corrected to standard conditions, dscm (dscf);

V_{dgm} = Volume of gas measured at dry-gas-meter conditions, $m^3(ft^3)$;

= Final volume reading - initial volume reading;

V_{prv} = Volume of gas measured at standard bell prover conditions, $m^3(ft^3)$

= K_{pvr} x (difference in meter stick height readings),

where:

K_{pvr} = number of ft^3 of air displaced represented by each cm of movement along the meter stick, $m^3/cm(ft^3/cm)$;

P_{dgm} = Absolute meter pressure, mm Hg (in. Hg)

= Barometric pressure + $\Delta H/13.6$;

P_{pvr} = Absolute prover pressure, mm Hg (in. Hg)

= Barometric pressure - [(ΔP) prover manometer]/13.6;

T_{pvr} = Absolute bell prover temperature, °K (°R); and

T_{dgm} = Absolute dry-gas-meter temperature, °K (°R).

7.4.1.11 Calculate the <u>Orifice Constants</u> using the following equations:

a. $$Q_{mo} = (1-B_{ws})\, Q_{std} \frac{P_{std} T_{m(avg)}}{P_m T_{std}}$$

where:

Q_{mo} = Sampling flowrate at orifice, ft^3/min (dry);

B_{ws} = Proportion by volume of water in ambient air, dimensionless;

Q_{std} = Standard sampling flowrate for SASS, 4.0 scfm (wet);

P_{std} = Standard absolute pressure, 29.92 in. Hg;

$T_{m(avg)}$ = Average meter temperature, °R;

P_m = Absolute meter pressure (barometric pressure + $\Delta H/13.6$), in. Hg; and

T_{std} = Standard temperature, 528°R.

b. $$J_i = \frac{Q_{mo}}{A_{oi}} \left[\frac{T_{m(avg)}}{P_m M_m} R \Delta H_i 2 g_c \right]^{-1/2}$$

where:

J_i = Orifice coefficient for orifice "i";

Q_{mo} = Sampling flowrate at orifice, ft^3/min (dry);

A_{oi} = Orifice area [π(diameter)^2]/4, in.^{2};

$T_{m(avg)}$ = Average meter temperature, °R;

P_m = Absolute meter pressure (see equation above), in. Hg;

M_m = Molecular weight of air, 29.0 lb_m/lb-mole;

R = Gas law constant, 1545 ft-lb_f/°R lb-mole;

ΔH_i = Orifice "i" pressure drop, in. H_2O; and

g_c = Gravitational constant, 32.17 lb_m-ft/lb_f sec^2.

7.4.1.12 The orifice constants may be determined without the bell prover by noting the dry-gas-meter volumes obtained by pumping at 1, 2, 3, and 6 in. H_2O for 3-min periods. The obtaining of consistent values when checking orifice constants in the field may be used as a rough indication of a valid calibration during extended field use.

7.4.2 After each series of field tests, the calibration of the metering system must be checked by performing three calibration measurements at a single intermediate orifice setting at or near the average used during the field testing. If the calibration has changed by more than 5%, recalibrate the meter over the full range of orifice settings. Calculations for the test series should then be performed using whichever calibration results in the lower value for total sample volume.

7.5 Probe heater: The probe heating system shall be calibrated before each initial use in the field and checked after each series of field tests according to the procedure outlined in APTD-0576.

7.6 Thermocouples: Each thermocouple must be permanently and uniquely marked on the casing; all mercury-in-glass reference thermometers must conform to ASTM-E-1 #63C or 63F specifications. Thermocouples should be calibrated in the laboratory without the use of extension leads. If extension leads are used in the field, the thermocouple reading at ambient air temperatures, with and without the extension lead, must be noted and recorded. Correction is necessary if the use of an extension lead produces a change greater than 1.5%. Calibration for the various kinds of thermocouples proceeds as follows:

7.6.1 Impinger and organic module thermocouples: For the thermocouples used to measure the temperature of the gas leaving the impinger train and the XAD-2 resin bed, a three-point calibration at ice water, room-air, and boiling-water temperatures is necessary. Accept the thermocouples only if the readings at all three temperatures agree within 2°C (3.6°F) of the absolute value of the reference thermometer.

7.6.2 **Dry-gas-meter thermocouples:** For the thermocouples used to indicate the dry-gas-meter inlet and outlet temperatures, a three-point calibration at ice-water, room-air, and boiling-water temperatures must be performed. The values must be within 2°C (3.6°F) of the absolute reference thermometer value at all three calibration points.

7.6.3 **Probe and stack thermocouple:** For the thermocouples used to indicate the probe and stack temperatures, a three-point calibration at ice-water, boiling-water, and boiling cooking-oil temperatures must be performed; it is highly recommended that room-air temperature be added as a fourth calibration point. If the absolute values of the reference thermometer and the thermocouple agree within 1.5% at each of the calibration points, a calibration curve (equation) may be constructed (calculated), and the data extrapolated to cover the entire temperature range suggested by the manufacturer.

7.7 Barometer: Adjust the field barometer initially and before each test series to agree within 2.5 mm Hg (0.1 in. Hg) of the mercury barometer, or within the station barometric pressure value reported by a nearby National Weather Service station and corrected for elevation.

7.8 Triple-Beam Balance: Calibrate the triple beam balance before each test series using Class-S standard weights; the weights must be within 0.5 g of the standards, or the balance adjusted to meet these limits.

7.9 Analytical Balance: Calibrate the analytical balance with Class-S weights before initially tare-weighing each set of filters. The balance must agree or be adjusted to within 2 mg of the standards. Run at least one standard each time one or more of the filters is reweighed.

8.0 CALCULATIONS

8.1 Dry gas volume:

8.1.1 From the SASS run sheet, average the dry-gas-meter temperatures and orifice pressure drops readings throughout the run. Calculate the Volume of Dry Gas Sampled at standard conditions (20°C, 760 mm Hg [528°R, 29.92 in. Hg]) using the equation:

$$V_{m(std)} = V_m \gamma \frac{(T_{std})}{T_m} \frac{(P_{bar} + (\Delta H/13.6))}{P_{std}}$$

$$= K_1 V_m \gamma \frac{(P_{bar} + (\Delta H/13.6))}{T_m}$$

where:

$V_{m(std)}$ = Volume of dry gas sampled at standard conditions, dscm (dscf);

V_m = Volume of dry gas sampled at dry-gas-meter conditions, dcm (dcf);

γ = Dry-gas-meter calibration factor, dimensionless;

T_m = Average dry-gas-meter temperature, °K (°R);

T_{std} = Standard absolute temperature, °K (°R);

P_{bar} = Barometric pressure at the sampling site, mm Hg (in. Hg);

P_{std} = Standard absolute pressure, mm Hg (in. Hg);

ΔH = Average orifice pressure drop during the sampling run, mm H_2O (in. H_2O); and

K_1 = 0.358°K/mm for metric units
= 17.64°R/in. Hg for English units.

8.1.2 The above equation must be modified whenever the leakage rate observed during any of the mandatory leak-checks (i.e., the post-test leak-checks or leak-checks made prior to component changes) exceeds the maximum allowed. The modification follows:

8.1.2.1 Case I (No component changes have been made during the sampling run, and the allowable leakage rate has been exceeded during the post-test leak-check): Replace V_m with the expression:

$$V_m - [(L_p - L_a)\theta]$$

where:

L_p = Leakage rate observed during post-test leak-check, m^3/min (cfm);

L_a = Maximum allowed leakage rate, 0.0014 m^3/min (0.05 ft^3/min); and

θ = Total sampling time, min.

8.1.2.2 Case II (One or more component changes made during the sampling run, and the allowable leakage rate has been exceeded

during one or more of the leak-checks prior to component changes or during the post-test leak-check): Replace V_m with the expression:

$$V_m - \sum_{i=1}^{n} \left[\theta_{i-1}(L_i - L_a) - \theta_p(L_p - L_a) \right]$$

where:

L_i = Leakage rate observed prior to "i^{th}" component change if the allowable leakage rate has been exceeded while sampling with the "i^{th}" component, m^3/min (cfm);

L_a = Maximum allowed leakage rate, 0.0014 m^3/min (0.05 ft^3/min);

θ_{i-1} = Sampling time interval between the successive component changes in which the allowable leakage rate has been exceeded, min;

L_p = Leakage rate observed during post-test leak-check, if the allowable leakage rate has been exceeded, m^3/min (cfm); and

θ_p = Sampling time interval, from the final (n^{th}) component change until the end of the sampling run, if the allowable leakage rate has been exceeded during the post-test leak-check, min.

8.2 Moisture content:

8.2.1 Calculate the Volume of Water Vapor at standard conditions:

$$V_{w(std)} = \left[\frac{\rho_w}{M_w} \right] \left[\frac{RT_{std}}{P_{std}} \right] = K_2 V_{1c}$$

where:

$V_{w(std)}$ = Volume of water vapor in the gas sample, corrected to standard conditions, dscm (dscf);

V_{1c} = Volume of liquid collected in the condensate reservoir added to the net increase in impinger solution volumes and silica gel weight gain during the run, mL;

ρ_w = Density of water, 0.9982 g/mL (0.002201 lb/mL);

M_w = Molecular weight of water, 18.0 g/g-mole (lb/lb-mole);

R = Ideal gas constant, 0.06236 mm Hg-m^3/°K-g-mole (21.85 in. Hg-ft^3/°R-lb-mole);

T_{std} = Standard absolute temperature, °K (°R);

P_{std} = Standard absolute pressure, mm Hg (in. Hg); and

K_2 = 0.001333 m^3/mL for metric units
= 0.04707 ft^3/mL for English units.

8.2.2 Calculate the Stack Gas Moisture Content (equal to B_{ws} x 100 for conversion to percent):

$$\%M = \frac{V_{w(std)}}{V_{m(std)} + V_{w(std)}} = B_{ws} \times 100$$

where:

B_{ws} = Proportion of water vapor in the gas stream by volume, dimensionless;

$V_{w(std)}$ = Volume of water vapor in the gas sample, corrected to standard conditions, dscm (dscf); and

$V_{m(std)}$ = Volume of gas measured by the dry gas meter, corrected to standard conditions, dscm (dscf).

8.2.3 In saturated or water-droplet-laden gas streams, make two calculations of the moisture content, one from the total volume of liquid collected in the train and one from the assumption of saturated gas-stream conditions. Use whichever method results in the lower value. To determine the moisture content based upon saturated conditions, use the average stack gas temperature in conjunction with: (1) a psychrometric chart, correcting for difference between the chart and the absolute stack pressure; or (2) saturation vapor pressure tables.

8.3 Particulate concentration:

8.3.1 Calculate the Unit Methanol/Methylene Chloride Blank Correction for all front-half samples:

$$C_{mm} = \frac{M_{mm}}{V_{mm}\rho_{mm}}$$

where:

C_{mm} = Methanol/methylene chloride blank correction, mg/g;

M_{mm} = Mass of methanol/methylene chloride after evaporation, mg;

V_{mm} = Volume of methanol/methylene chloride used in wash, mL; and

ρ_{mm} = Density of 50:50 mix of methanol/methylene chloride, mg/mL (see labels on bottles).

8.3.2 Calculate the Total Methanol/Methylene Chloride Blank Weight Correction for each individual front-half sample:

$$W_{mm} = C_{mm} V_{mm} \rho_{mm}$$

where:

W_{mm} = Weight of residue in methanol/methylene chloride front-half wash, mg;

C_{mm} = Methanol/methylene chloride unit blank correction, mg/g;

V_{mm} = Volume of methanol/methylene chloride used for front-half wash, mL; and

ρ_{mm} = Density of 50:50 mixture of methanol and methylene chloride, mg/mL.

8.3.3 Calculate Total Particulate Weight:

$$W_p = (W_{pf-a} + W_{pf-b} + \ldots\ldots) + (W_{10c} + W_{3c} + W_{1c}) + (W_{pr} - W_{mm})$$

where:

W_p = Total particulate weight, mg;

$W_{pf-a+\ldots}$ = Particulate weight from filter Pf-a + Pf-b + ... ;

W_{10c}, W_{3c}, W_{1c} = Particulate weight catch from the 10-, 3-, and 1-um cyclones, respectively, mg;

W_{pr} = Weight of front-half rinse residue before blank correction, mg; and

W_{mm} = Methanol/methylene chloride blank weight correction, mg.

8.3.4 Calculate the Total Particulate Concentration:

$$C_p = (0.001\ g/mg)\ (W_p/V_{m(std)})$$

where:

C_p = Concentration of particulate material in the stack gas, g/dscm (gr/dscf);

W_p = Weight of particulate material collected during run, mg; and

$V_{m(std)}$ = Volume of gas sampled, dscm (dscf).

8.3.5 To convert the above concentration to units of gr/ft^3 or lb/ft^3 for comparison with established or projected values, the following conversion factors are useful:

From:	To:	Multiply By:
scf	m^3	0.02832
g/ft^3	gr/ft^3	15.43
g/ft^3	lb/ft	2.205×10^{-3}
g/ft^3	g/m^3	35.315

8.4 Concentration of organic material:

8.4.1 Calculate the Volumetric Flow Rate (Q_{sd}) during the run. Determine the average stack gas velocity and volumetric flow rate from actual run data in the same manner that these were calculated during preliminary determinations (see Paragraph 4.3).

8.4.2 Calculate the POHC Concentration:

$$C_{pohc} = \frac{M_{pohc}}{Q_{sd}} = \frac{M_{cd-le} + M_{mrx}}{Q_{sd}}$$

where:

C_{pohc} = Concentration of POHCs in stack gas, ug/dscm;

M_{pohc} = Total mass of POHCs collected in XAD-2 and organic module rinse, and in the condensate extract, ug;

M_{cd-le} = Mass of POHCs extracted from the condensate (corrected for methylene chloride blank extraction residue), ug;

M_{mrx} = Mass of POHCs extracted from the XAD-2 sorbent and organic module rinse (corrected for methylene chloride blank extraction residue), ug; and

Q_{sd} = Volumetric flow rate during the run, dscm.

8.5 Isokinetic variation:

8.5.1 Having calculated T_s, $V_{m(std)}$, V_s, A_n, P_s, and B_{ws}, determine the Isokinetic Variation using the equation:

$$I = K_4 \frac{T_s V_{m(std)}}{P_s V_s A_n \theta (1-B_{ws})}$$

where:

I = Isokinetic variation, %;

T_s = Absolute average stack gas temperature, °K (°R);

$V_{m(std)}$ = Volume of gas sampled, dscm (dscf);

P_s = Absolute stack gas pressure, mm Hg (in. Hg);

V_s = Stack gas velocity, m/sec (ft/sec);

A_n = Cross-sectional area of nozzle, m^3 (ft^3);

θ = Net sampling time, min;

B_{ws} = Proportion of water vapor in gas stream by volume, dimensionless; and

K_4 = 4.320 for metric units
= 0.09450 for English units.

8.5.2 For the accuracy of Level 1 requirements (factor of 3) for measured particulate emissions, the isokinetic variation must be within 70-150%.

8.6 Cyclone particle-size cutoff diameter:

8.6.1 The particle-size cutoff diameter represents that particle diameter (assuming spherical particles of unit density) at which the cyclone exhibits 50% collection efficiency; it is expressed as the "d_{50}." The range of particle size collected in each cyclone and on the filter is dependent upon the operating temperature and flow rate through each of

these components. The particle-size cutoff diameters of 10, 3, and 1 um in the cyclones are the result of calibration of these at 400°F and 4.0 scfm (6.5 acfm). When the determined isokinetic sampling rate is not 4.0 scfm, or when it is necessary to maintain a constant subisokinetic sampling rate (still within the limits of Level 1 accuracy) during the SASS run, the particle-size cutoff diameters for the cyclones must be extrapolated.

8.6.2 Existing calibration data is insufficient to determine exact mathematical relationships for variations of particle-size cutoff diameter with temperature and with volumetric flow rate. The best estimates (McCain, 1983) suggest that a square, and an inverse square root dependence, respectively, exist; the extrapolation equation is presented below.

8.6.2.1 Calculate the Gas Viscosity from the equation:

$$\mu = (1.68 \times 10^{-4}) + (2.292 \times 10^{-7})\ (T)$$

where:

μ = Gas viscosity, poise; and

T = Gas temperature, °F.

8.6.2.2 Extrapolate the Particle Size Cutoff Diameter from:

$$D_{T_a,F_a} = D_{400,4.0} \frac{\left[\frac{\mu_{400}}{\mu_{T_a}}\right]^2}{\left[\frac{V_{4.0}}{V_{F_a}}\right]^{1/2}} = D_{400,4.0} \frac{3.37\sqrt{V_{F_a}}}{\mu^2 T_a}$$

where:

D_{T_a,F_a} = Particle size cutoff diameter at cyclone operating a temperature and flow rate, um (note that the volumetric flow rate must be corrected to standard conditions);

$D_{400,4.0}$ = Particle size cutoff diameter at an operating temperature of 400°F and flow rate of 4.0 scfm, um;

μ_{400} = Gas viscosity at 400°F, poise;

μ_{T_a} = Gas viscosity at operating conditions, poise;

$V_{4.0}$ = Cyclone volumetric flow rate of 4.0 scfm; and

V_{F_a} = Cyclone volumetric flow rate at operating conditions, scfm.

This equation reduces to:

1. $$\frac{33.7\sqrt{V_{F_a}}}{\mu_{T_a}^2}$$ for the 10-um cyclone,

2. $$\frac{10.1\sqrt{V_{F_a}}}{\mu_{T_a}^2}$$ for the 3-um cyclone,

3. $$\frac{3.37\sqrt{V_{V_a}}}{\mu_{T_a}^2}$$ for the 1-um cyclone,

8.7 <u>Cumulative particulate weight percent less than calculated size</u>:

8.7.1 Divide the weight collected in the individual cyclones and on the filter by the total weight of particulate collected; express these as a percentage, using the following equations:

$$\% W_{pf} = \frac{W_{pf-a} + W_{pf-b} + \ldots}{W_p} \times 100$$

$$\% W_{10c} = \frac{W_{10c}}{W_p} \times 100$$

$$\% W_{3c} = \frac{W_{3c}}{W_p} \times 100$$

$$\% W_{1c} = \frac{W_{1c}}{W_p} \times 100$$

where:

W_p = Total particulate weight collected, mg;

W_{pf} = $W_{pf-a} + W_{pf-b} + \ldots$

= Particulate weight collected on filters PF-a + PF-b, etc., mg;

W_{10c} = Particulate weight collected in 10-um cyclone, mg;

W_{3c} = Particulate weight collected in 3-um cyclone, mg;

W_{1c} = Particulate weight collected in 1-um cyclone, mg; and

100 = Conversion to percent.

8.7.2 Calculate the Cumulative Weight Percent Less than the Calculated Particle Size Cutoff Diameter by adding, to each weight percent, the weight percent of all fractions having a smaller particle-size cutoff diameter. Tabulate the data, using the form below as an example:

PRESENTATION OF SASS PARTICLE SIZING DATA

Stage	Weight % Collected in Stage	Cumulative Weight % Less than Calculated Particle Size Cutoff Diameter	Calculated Particle Size Cutoff Diameter
10-um cyclone			
3-um cyclone			
1-um cyclone			
Glass fiber filter			

9.0 REFERENCES

9.1 References

1. Blake, D.W., Operating and Service Manual, Source Assessment Sampling System, Acurex Corporation/Aerctherm Division, Mountain View, California, 1977.

2. Hamersma, J.W., D.G. Ackerman, M.M. Yamada, C.A. Zee, C.Y. Ung, K.T. McGregor, J.F. Clausen, M.L. Kraft, J.S. Shapiro, and E.L. Moon, Emissions Assessment of Conventional Stationary Source Combustion Systems: Methods and Procedures Manual for Sampling and Analysis (final revision superseding drafts of January and September 1977), TRW, Redondo Beach, California, 1978.

3. Rom, J.J., Maintenance Calibration and Operation of Isokinetic Source Sampling Equipment, U.S. Environmental Protection Agency, Research Triangle Park, North Carolina, APTD-0576, 1972.

4. U.S. Environmental Protection Agency, 40 CFR 60, Appendix A, Methods 1-5, 1979.

5. U.S. Environmental Protection Agency, IERL-RTP Procedures Manual: Level 1 Environmental Assessment, 2nd ed., Industrial Environmental Research Laboratory, Research Triangle Park, NC, EPA-600/7-78-201, 1978.

9.2 Bibliography

1. Anderson Samplers, Inc., Operating Manual for Anderson 2000, Inc., Mark II and Mark III Particle Sizing Stack Samplers, Anderson Samplers, Inc., Atlanta, Georgia.

2. Blake, D.W., Source Assessment Sampling System: Design and Development, U.S. Environmental Protection Agency, Office of Research and Development, Research Triangle Park, NC, EPA-600/7-78-019, 1978.

3. Harris, J.C., D.J. Larsen, C.E. Rechsteiner, K.E. Thrun, Sampling and Analysis Methods for Hazardous Waste Incineration, 1st ed., U.S. EPA Contract No. 68-02-3111, Arthur D. Little, Inc., 1982.

4. Lentzen, D.E., et al., IERL-RTP Procedures Manual: Level I Environmental Assessment, 2nd ed., Industrial Environmental Research Laboratory, Research Triangle Park, NC, EPA-600/7-78-201, 1978.

5. Martin, R.M., Construction Details of Isokinetic Source-Sampling Equipment, U.S. Environmental Protection Agency, Research Triangle Park, North Carolina, APTD-0581, 1971.

6. McCain, J.D., Southern Research Institute, 2000 South Ninth Avenue, Birmingham, AL 35205, private communication, 1983.

7. von Lehmden, D.J., et al., Quality Assurance Handbook for Air Pollution Measurement Systems, Vol. III: Stationary Source-Specific Methods, Environmental Monitoring and Support Laboratory, Research Triangle Park, NC, EPA-600/4-77-027b, 1980.

METHOD 0030

VOLATILE ORGANIC SAMPLING TRAIN

1.0 PRINCIPLE AND APPLICATION

1.1 Principle

1.1.1 This method describes the collection of volatile principal organic hazardous constituents (POHCs) from the stack gas effluents of hazardous waste incinerators. For the purpose of definition, volatile POHCs are those POHCs with boiling points less than 100°C. If the boiling point of a POHC of interest is less than 30°C, the POHC may break through the sorbent under the conditions of the sample collection procedure.

1.1.2 Field application for POHCs of this type should be supported by laboratory data which demonstrate the efficiency of a volatile organic sampling train (VOST) to collect POHCs with boiling points less than 30°C. This may require using reduced sample volumes collected at flow rates between 250 and 500 mL/min. Many compounds which boil above 100°C (e.g., chlorobenzene) may also be efficiently collected and analyzed using this method. VOST collection efficiency for these compounds should be demonstrated, where necessary, by laboratory data of the type described above.

1.1.3 This method employs a 20-liter sample of effluent gas containing volatile POHCs which is withdrawn from a gaseous effluent source at a flow rate of 1 L/min, using a glass-lined probe and a volatile organic sampling train (VOST). (Operation of the VOST under these conditions has been called FAST-VOST.) The gas stream is cooled to 20°C by passage through a water-cooled condenser and volatile POHCs are collected on a pair of sorbent resin traps. Liquid condensate is collected in an impinger placed between the two resin traps. The first resin trap (front trap) contains approximately 1.6 g Tenax and the second trap (back trap) contains approximately 1 g each of Tenax and petroleum-based charcoal (SKC Lot 104 or equivalent), 3:1 by volume. A total of six pairs of sorbent traps may be used to collect volatile POHCs from the effluent gas stream.

1.1.4 An alternative set of conditions for sample collection has been used. This method involves collecting sample volume of 20 liters or less at reduced flow rate. (Operation of the VOST under these conditions has been referred to as SLO-VOST.) This method has been used to collect 5 liters of sample (0.25 L/min for 20 min) or 20 liters of sample (0.5 L/min for 40 min) on each pair of sorbent cartridges. Smaller sample volumes collected at lower flow rates should be considered when the boiling points of the POHCs of interest are below 35°C. A total of six pairs of sorbent traps may be used to collect volatile POHCs from the effluent gas stream.

1.1.5 Analysis of the traps is carried out by thermal desorption purge-and-trap by gas chromatography/mass spectrometry (see Method 5040). The VOST is designed to be operated at 1 L/min with traps being replaced every 20 min for a total sampling time of 2 hr. Traps may be analyzed separately or combined onto one trap to improve detection limit. However, additional flow rates and sampling times are acceptable. Recent experience has shown that when less than maximum detection ability is required, it is acceptable and probably preferable to operate the VOST at 0.5 L/min for a total of three 40-min periods. This preserves the 2-hr sampling period, but reduces the number of cartridge changes in the field as well as the number of analyses required.

1.2 Application

1.2.1 This method is applicable to the determination of volatile POHCs in the stack gas effluent of hazardous waste incinerators. This method is designed for use in calculating destruction and removal efficiency (DRE) for the volatile POHCs and to enable a determination that DRE values for removal of the volatile POHCs are equal to or greater than 99.99%.

1.2.2 The sensitivity of this method is dependent upon the level of interferences in the sample and the presence of detectable levels of volatile POHCs in blanks. The target detection limit of this method is 0.1 ug/m^3 (ng/L) of flue gas, to permit calculation of a DRE equal to or greater than 99.99% for volatile POHCs which may be present in the waste stream at 100 ppm. The upper end of the range of applicability of this method is limited by breakthrough of the volatile POHCs on the sorbent traps used to collect the sample. Laboratory development data have demonstrated a range of 0.1 to 100 ug/m^3 (ng/L) for selected volatile POHCs collected on a pair of sorbent traps using a total sample volume of 20 liters or less (see Paragraph 1.1.4).

1.2.3 This method is recommended for use only by experienced sampling personnel and analytical chemists or under close supervision by such qualified persons.

1.2.4 Interferences arise primarily from background contamination of sorbent traps prior to or after use in sample collection. Many potential interferences can be due to exposure of the sorbent materials to solvent vapors prior to assembly and exposure to significant concentrations of volatile POHCs in the ambient air at hazardous waste incinerator sites.

1.2.5 To avoid or minimize the low-level contamination of train components with volatile POHCs, care should be taken to avoid contact of all interior surface or train components with synthetic organic materials (e.g., organic solvents, lubricating and sealing greases), and train components should be carefully cleaned and conditioned according to the procedures described in this protocol.

2.0 APPARATUS

2.1 Volatile Organic Sampling Train: A schematic diagram of the principal components of the VOST is shown in Figure 1 and a diagram of one acceptable version of the VOST is shown in Figure 2. The VOST consists of a glass-lined probe followed by an isolation valve, a water-cooled glass condenser, a sorbent cartridge containing Tenax (1.6 g), an empty impinger for condensate removal, a second water-cooled glass condenser, a second sorbent cartridge containing Tenax and petroleum-based charcoal (3:1 by volume; approximately 1 g of each), a silica gel drying tube, a calibrated rotameter, a sampling pump, and a dry gas meter. The gas pressure during sampling and for leak-checking is monitored by pressure gauges which are in line and downstream of the silica gel drying tube. The components of the sampling train are described below.

2.1.1 **Probe:** The probe should be made of stainless steel with a borosilicate or quartz glass liner. The temperature of the probe is to be maintained above 130°C but low enough to ensure a resin temperature of 20°C. A water-cooled probe may be required at elevated stack temperatures to protect the probe and meet the above requirements. Isokinetic sample collection is not a requirement for the use of VOST since the compounds of interest are in the vapor phase at the point of sample collection.

2.1.2 **Isolation valve:** The isolation valve should be a greaseless stopcock with a glass bore and sliding Teflon plug with Teflon wipers (Ace 8193 or equivalent).

2.1.3 **Condensers:** The condensers (Ace 5979-14 or equivalent) should be of sufficient capacity to cool the gas stream to 20°C or less prior to passage through the first sorbent cartridge. The top connection of the condenser should be able to form a leak-free, vacuum-tight seal without using sealing greases.

2.1.4 **Sorbent cartridges:**

2.1.4.1 The sorbent cartridges used for the VOST may be used in either of two configurations: the inside-outside (I/O) configuration in which the cartridge is held within an outer glass tube and in a metal carrier, and the inside-inside (I/I) configuration in which only a single glass tube is used, with or without a metal carrier. In either case, the sorbent packing will be the same.

2.1.4.1.1 The first of a pair of sorbent cartridges shall be packed with approximately 1.6 g Tenax GC resin and the second cartridge of a pair shall be packed with Tenax GC and petroleum-based charcoal (3:1 by volume; approximately 1 g of each).

2.1.4.1.2 The second sorbent cartridge shall be packed so that the sample gas stream passes through the Tenax layer first and then through the charcoal layer.

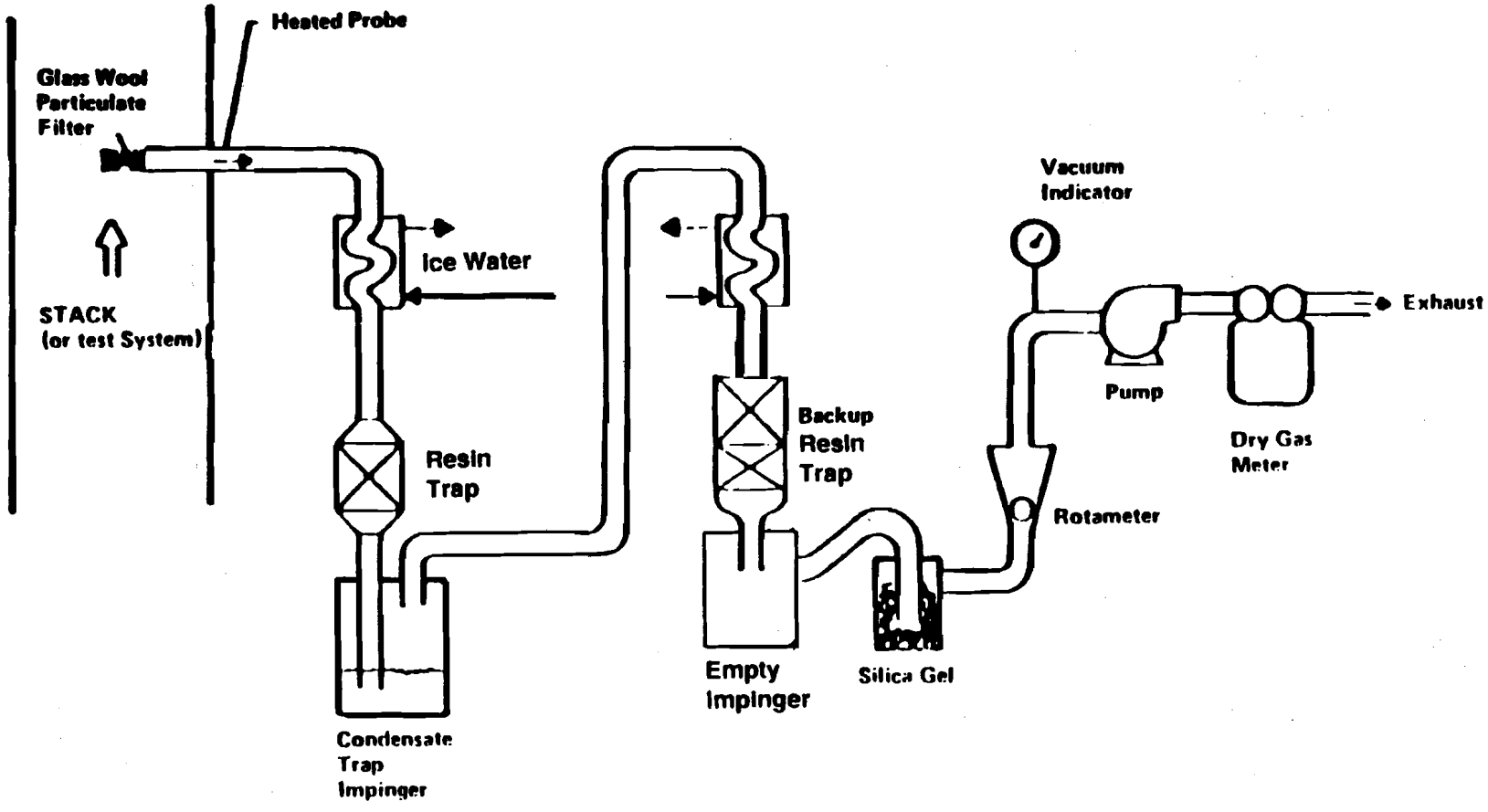

Figure 1. Schematic of Volatile Organic Sampling Train (VOST).

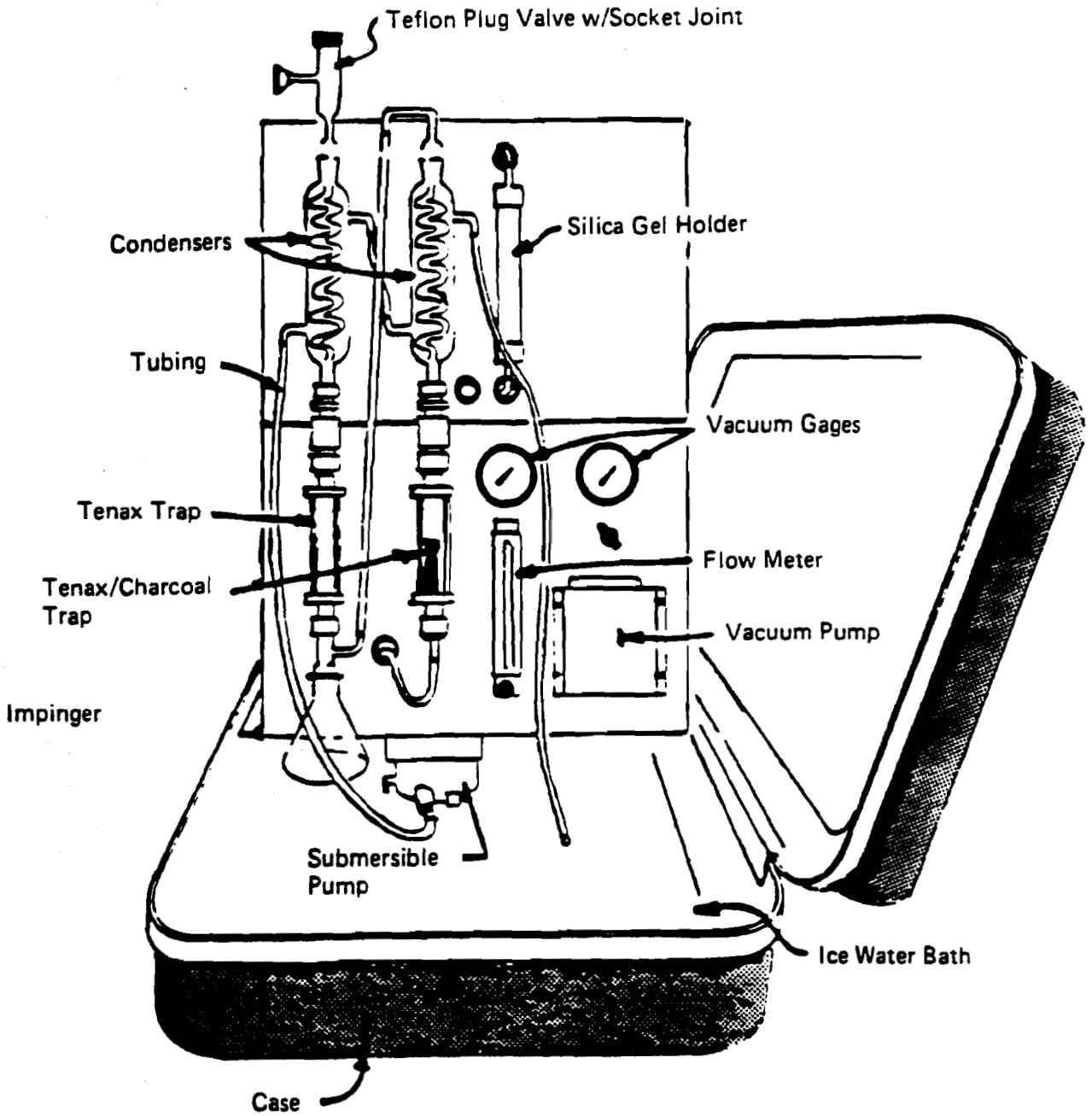

Figure 2. Volatile Organic Sampling Train (VOST).

2.1.4.2 The sorbent cartridges shall be glass tubes with approximate dimensions of 10 cm by 1.6 cm I.D. The two acceptable designs (I/O, I/I) for the sorbent cartridge are described in further detail below.

2.1.4.2.1 **Inside/Inside sorbent cartridge:** A diagram of an I/I sorbent cartridge is shown in Figure 3. This cartridge is a single glass tube (10 cm by 1.6 cm I.D.) which has the ends reduced in size to accommodate a 1/4- or 3/8-in. Swagelok or Cajon gas fitting. The resin is held in place by glass wool at each end of the resin layer. The amounts of each type of sorbent material used in the I/I design are the same as for the I/O design. Threaded end caps are placed on the sorbent cartridge after packing with sorbent to protect the sorbent from contamination during storage and transport.

2.1.4.2.2 **Inside/Outside type sorbent cartridge:** A diagram of an I/O sorbent cartridge is shown in Figure 4. In this design the sorbent materials are held in the glass tube with a fine mesh stainless steel screen and a C-clip. The glass tube is then placed within a larger diameter glass tube and held in place using Viton O-rings. The purpose of the outer glass tube is to protect the exterior of the resin-containing tube from contamination. The two glass tubes are held in a stainless steel cartridge holder, where the ends of the glass tubes are held in place by Viton O-rings placed in machine grooves in each metal end piece. The three cylindrical rods are secured in one of the metal end pieces and fastened to the other end piece using knurled nuts, thus sealing the glass tubes into the cartridge holder. The end pieces are fitted with a threaded nut onto which a threaded end cap is fitted with a Viton O-ring seal, to protect the resin from contamination during transport and storage.

2.1.5 **Metering system:** The metering system for VOST shall consist of vacuum gauges, a leak-free pump (Thomas Model 107 or equivalent, Thomas Industries, Sheboygan, Wisconsin), a calibrated rotameter (Linde Model 150, Linde Division of Union Carbide, Keasbey, New Jersey) for monitoring the gas flow rate, a dry gas meter with 2% accuracy at the required sampling rate, and related valves and equipment. Provisions should be made for monitoring the temperature of the sample gas stream between the first condenser and first sorbent cartridge. This can be done by placing a thermocouple on the exterior glass surface of the outlet from the first condenser. The temperature at that point should be less than 20°C. If it is not, an alternative condenser providing the required cooling capacity must be used.

2.1.6 **Sample transfer lines:** All sample transfer lines to connect the probe to the VOST shall be less than 5 ft in length, and shall be heat-traced Teflon with connecting fittings which are capable of forming leak-free, vacuum-tight connections without the use of sealing grease.

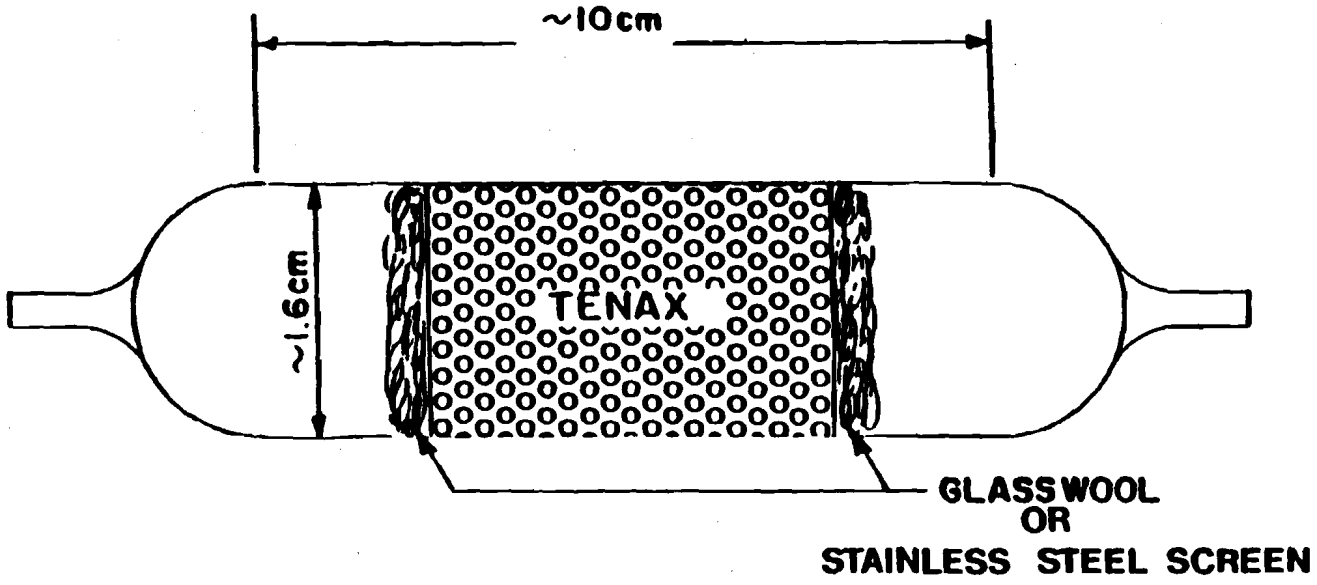

Figure 3. Inside-inside vost cartridge

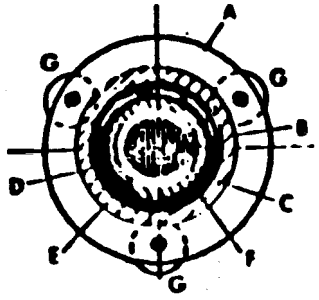

Section cut through glass tubes
(showing screen, C-clip and O-ring in place)

LEGEND

A - Stainless Steel Carrier
B - Glass Tube (9.84 L x 2.22 ID)
C - Small Glass Tube (10 cm x 1.6 cm ID)
D - Fine Mesh Stainless Steel Screen
E - Stainless Steel C-Clip
F - O-Ring (Viton)
G - Nuts (4)
H - End Cap with Viton O-Ring
I - Metal Rod with Threaded End (3)
J - Tenax/Charcoal Sorbent
K - Cajon Fitting

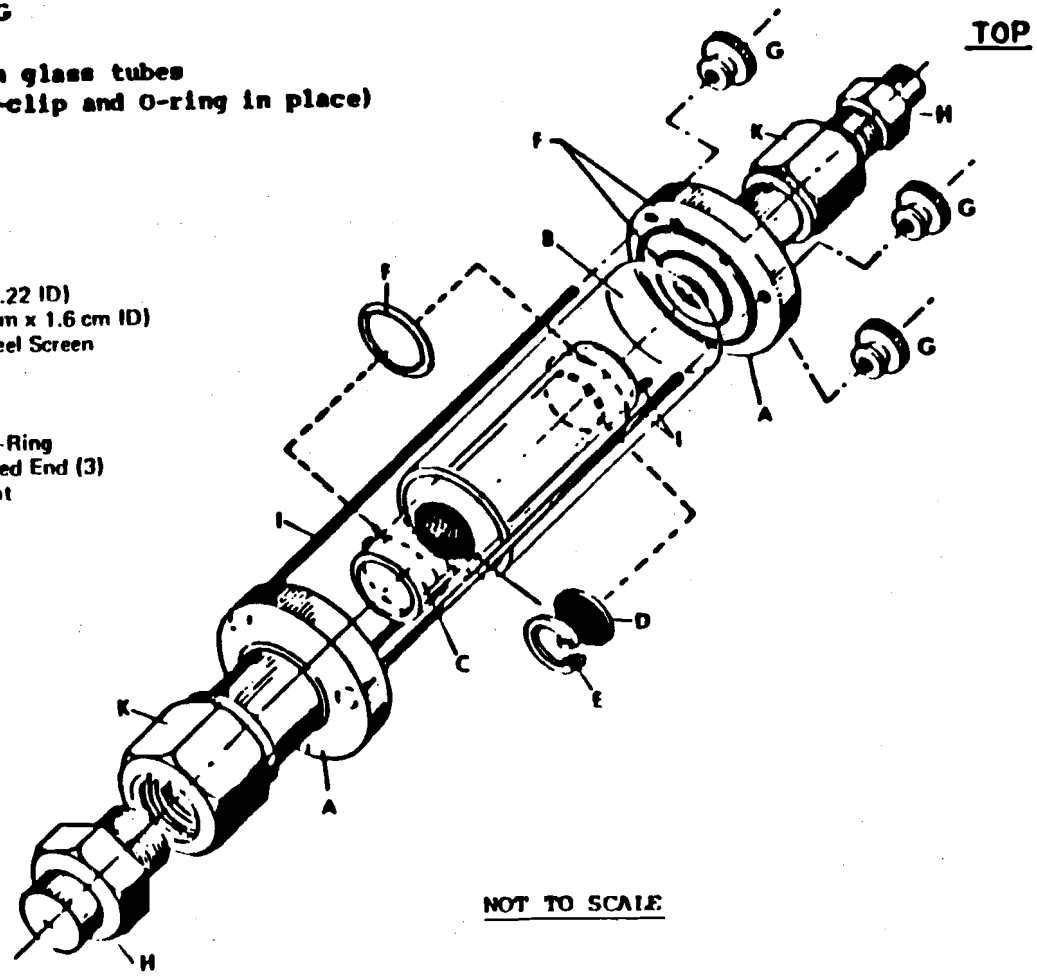

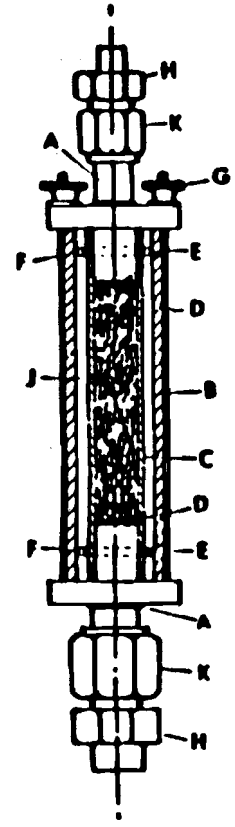

Assembled Trap
NTS

Figure 4. Sorbent Trap Assembly (I/O)
Volatile Organic Sampling Train (VOST)

All other sample transfer lines used with the VOST shall be Teflon with connecting fittings that are capable of forming leak-free, vacuum-tight connections without the use of sealing grease.

3.0 REAGENTS AND MATERIALS

3.1 2,6-Diphenylene oxide polymer (Tenax, 35/60 mesh):

3.1.1 The new Tenax is Soxhlet extracted for 24 hr with methanol (Burdick & Jackson, pesticide grade or equivalent). The Tenax is dried for 6 hr in a vacuum oven at 50°C before use. Users of I/O and I/I sorbent cartridges have used slightly different thermal conditioning procedures. I/O sorbent cartridges packed with Tenax are thermally conditioned by flowing organic-free nitrogen (30 mL/min) through the resin while heating to 190°C. Some users have extracted new Tenax and charcoal with pentane to remove nonpolar impurities. However, these users have experienced problems with residual pentane in the sorbents during analysis.

3.1.2 If very high concentrations of volatile POHCs have been collected on the resin (e.g., micrograms of analytes), the sorbent may require Soxhlet extraction as described above. Previously used Tenax cartridges are thermally reconditioned by the method described above.

3.2 Charcoal (SKC petroleum-base or equivalent): New charcoal is prepared and charcoal is reconditioned as described in Paragraph 4.4. New charcoal does not require treatment prior to assembly into sorbent cartridges. Users of VOST have restricted the types of charcoal used in sorbent cartridges to only petroleum-based types. Criteria for other types of charcoal are acceptable if recovery of POHC in laboratory evaluations meet the criteria of 50 to 150%.

3.3 Viton-O-Ring: All O-rings used in VOST shall be Viton. Prior to use, these O-rings should be thermally conditioned at 200°C for 48 hr. O-rings should be stored in clean, screw-capped glass containers prior to use.

3.4 Glass tubes/Condensers: The glass resin tubes and condensers should be cleaned with a nonionic detergent in an ultrasonic bath, rinsed well with organic-free water, and dried at 110°C. Resin tubes of the I/O design should be assembled prior to storage as described in Paragraph 4.1. Resin tubes of the I/I design can be stored in glass culture tube containers with cotton cushioning and Teflon-lined screw caps. Condensers can be capped with appropriate end caps prior to use.

3.5 Metal parts: The stainless steel carriers, C-clips, end plugs, and screens used in the I/O VOST design are cleaned by ultrasonication in a warm nonionic detergent solution, rinsed with distilled water, air-dried, and heated in a muffle furnace for 2 hr at 400°C. Resin tubes of the I/I design require Swagelok or equivalent end caps with Supelco M-1 ferrules. These should be heated at 190°C along with the assembled cartridges.

3.6 Silica gel (Indicating type, 6-16 mesh): New silica gel may be used as received. Silica gel which has been previously used should be dried for 2 hr at 175°C (350°F).

3.7 Cold packs: Any commercially available reusable liquids or gels that can be repeatedly frozen are acceptable. They are typically sold in plastic containers as "Blue Ice" or "Ice-Packs." Enough should be used to keep cartridges at or near 4°C.

3.8 Water: Water used for cooling train components in the field may be tap water; and water used for rinsing glassware should be organic-free.

3.9 Glass wool: Glass wool should be Soxhlet extracted for 8 to 16 hr, using methanol, and oven dried at 110°C before use.

4.0 SAMPLE HANDLING AND PROCEDURE

4.1 Assembly:

4.1.1 The assembly and packing of the sorbent cartridges should be carried out in an area free of volatile organic material, preferably a laboratory in which no organic solvents are handled or stored and in which the laboratory air is charcoal filtered. Alternatively, the assembly procedures can be conducted in a glove box which can be purged with organic-free nitrogen.

4.2 Tenax cartridges:

4.2.1 The Tenax, glass tubes, and metal cartridge parts are cleaned and stored (see Section 3.0). Approximately 1.6 g of Tenax is weighed and packed into the sorbent tube which has a stainless steel screen and C-clip (I/O design) or glass wool (I/I design) in the downstream end. The Tenax is held in place by inserting a stainless steel screen and C-clips in the upstream end (I/O design) or glass wool (I/I design). Each cartridge should be marked, using an engraving tool, with an arrow to indicate the direction of sample flow, and a serial number.

4.2.2 Conditioned resin tubes of the I/O design are then assembled into the metal carriers according to the previously described inside/inside or inside/outside procedures (with end caps) and are placed on cold packs for storage and transport. Conditioned resin tubes of the I/I design are capped and placed on cold packs for storage and transport.

4.3 Tenax/Charcoal tubes

4.3.1 The Tenax, charcoal, and metal cartridge parts are cleaned and stored as previously described (see Section 3.0). The tubes are packed with approximately a 3:1 volume ratio of Tenax and charcoal (approximately 1 g each). The Tenax and charcoal are held in place by the stainless steel screens and C-clips (I/O design) or by glass wool (I/I design). The glass tubes containing the Tenax and charcoal are then

conditioned as described below (see Paragraph 4.4). Place the I/O glass tubes in the metal carriers (see Paragraph 2.1.4.2.2), put end caps on the assembled cartridges, mark direction of sample flow and serial number, and place the assembled cartridges on cold packs for storage and transport.

4.3.2 Glass tubes of the I/I design are conditioned, and stored in the same manner as the I/O tubes.

4.4 Trap Conditioning - QC

4.4.1 Following assembly and leak-checking, the traps are connected in reverse direction to sampling to a source of organic-free nitrogen, and nitrogen is passed through each trap at a flow rate of 40 mL/min, while the traps are heated to 190°C for 12-28 hr. The actual conditioning period may be determined based on adequacy of the resulting blank checks.

4.4.2 The following procedure is used to blank check each set of sampling cartridges prior to sampling to ensure cleanliness. The procedure provides semi-quantitative data for organic compounds with boiling points below 110°C on Tenax and Tenax/Charcoal cartridges. It is not intended as a substitute for Method 5040.

4.4.2.1 The procedure is based on thermal desorption of each set of two cartridges, cryofocusing with liquid nitrogen onto a trap packed with glass beads, followed by thermal desorption from the trap and analysis by GC/FID.

4.4.2.2 The detection limit is based on the analysis of Tenax cartridges spiked with benzene and toluene and is around 2 ng for each compound.

4.4.2.3 The results of analyzing spiked cartridges on a daily basis should not vary by more than 20 percent. If the results are outside this range, the analytical system must be evaluated for the probable cause and a second spiked cartridge analyzed.

4.4.2.4 The GC operating conditions are as follows:

GC Operating Conditions

Column: Packed column 6 ft x 1/8" stainless steel 1.0 percent SP-1000 on Carbopack B 60/80, or equivalent.
Temperature program: 50°C for 5 min, 20°C/min increase to 190°C, hold 13 min.
Injector: 200°C.
Detector: F.I.D. 250°C.
Carrier Gas: Helium at 25 mL/min.
Sample valve: Valco 6-port with 40" x 1/16" stainless steel trap packed with 60/80 mesh glass beads.
Cryogen: Liquid nitrogen.
Trap heater: Boiling water, hot oil, or electrically heated.

Desorption heater: Supelco "clam shell" (high capacity carrier gas purifier) heater and Variac, adjusted to 180°C to 200°C.

4.4.2.5 Calibration is accomplished by preparing a spiked Tenax cartridge with benzene and toluene and analyzing according to the standard operating procedure. A standard of benzene, toluene and bromofluorobenzene (BFB) is prepared by injecting 2.0 uL of benzene and toluene and 1.0 uL of BFB into 10 mL of methanol. The concentration of this stock is 175 ng/uL of benzene and toluene, and 150 ng/uL BFB. One microliter of the stock standard is injected onto a Tenax cartridge through a heated injection port set at 150°C. A GC oven can be used for this with the oven at room temperature. Helium carrier gas is set at 50 mL/min. The solvent flush technique should be used. After two min, remove the Tenax cartridge and place in the desorption heater for analysis. BFB is also used as an internal standard spike for GC/MS analysis which provides a good comparison between GC/FID and GC/MS. The results of this spike analysis should not vary more than 20 percent day to day. Initially and then periodically this spiked Tenax should be reanalyzed a second time to verify that the 10 min desorption time and 180-200°C temperature are adequate to remove all of the spiked components. It should be noted that only one spiked Tenax cartridge need be prepared and analyzed daily unless otherwise needed to ensure proper instrument operation.

An acceptable blank level is left to the discretion of the method analyst. An acceptable level is one that allows adequate determination of expected components emitted from the waste being burned.

4.4.3 After conditioning, traps are sealed and placed on cold packs until sampling is accomplished. Conditioned traps should be held for a minimum amount of time to prevent the possibility of contamination.

4.4.4 It may be useful to spike the Tenax and Tenax/charcoal traps with the compounds of interest to ensure that they can be thermally desorbed under laboratory conditions. After spiked traps are analyzed they may be reconditioned and packed for sampling.

4.5 Pretest preparation:

4.5.1 All train components shall be cleaned and assembled as previously described. A dry gas meter shall have been calibrated within 30 days prior to use, using an EPA-supplied standard orifice.

4.5.2 The VOST is assembled according to the schematic diagram in Figure 1. The cartridges should be positioned so that sample flow is

through the Tenax first and then the Tenax/charcoal. Cooling water should be circulated to the condensers and the temperature of the cooling water should be maintained near 0°C. The end caps of the sorbent cartridges should be placed in a clean screw-capped glass container during sample collection.

4.6 Leak-checking:

4.6.1 The train is leak-checked by closing the valve at the inlet to the first condenser and pulling a vacuum of 250 mm (10 in. Hg) above the normal operating pressure. The traps and condensers are isolated from the pump and the leak rate noted. The leak rate should be less than 2.5 mm Hg after 1 min. The train is then returned to atmospheric pressure by attaching a charcoal-filled tube to the train inlet and admitting ambient air filtered through the charcoal. This procedure will minimize contamination of the VOST components by excessive exposure to the fugitive emissions at hazardous waste incinerator sites.

4.7 Sample Collection

4.7.1 After leak-checking, sample collection is accomplished by opening the valve at the inlet to the first condenser, turning on the pump, and sampling at a rate of 1 liter/min for 20 min. The volume of sample for any pair of traps should not exceed 20 liters.

4.7.2 Following collection of 20 liters of sample, the train is leak-checked a second time at the highest pressure drop encountered during the run to minimize the chance of vacuum desorption of organics from the Tenax. The train is returned to atmospheric pressure, using the method discussed in Paragraph 4.1 and the two sorbent cartridges are removed. The end caps are replaced and the cartridges shall be placed in a suitable environment for storage and transport until analysis. The sample is considered invalid if the leak test does not meet specification.

4.7.3 A new pair of cartridges is placed in the VOST, the VOST leak-checked, and the sample collection process repeated as described above. Sample collection continues until six pairs of traps have been used.

4.7.4 All sample cartridges should be kept on cold packs until they are ready for analysis.

4.8 Blanks

4.8.1 **Field blanks/trip blanks:** Blank Tenax and Tenax/charcoal cartridges are taken to the sampling site and the end caps removed for the period of time required to exchange two pairs of traps on VOST. After the two VOST traps have been exchanged, the end caps are replaced on the blank Tenax and Tenax/charcoal tubes and these are returned to the cold packs and analyzed with the sample traps. At least one pair of field blanks (one Tenax, one Tenax/charcoal) shall be included with each

six pairs of sample cartridges collected (or for each field trial using VOST to collect volatile POHCs).

4.8.2 **Trip blanks:** At least one pair of blank cartridges (one Tenax, one Tenax/charcoal) shall be included with shipment of cartridges to a hazardous waste incinerator site. These "field blanks" will be treated like any other cartridges except that the end caps will not be removed during storage at the site. This pair of traps will be analyzed to monitor potential contamination which may occur during storage and shipment.

4.8.3 **Laboratory blanks:** One pair of blank cartridges (one Tenax, one Tenax/charcoal) will remain in the laboratory using the method of storage which is used for field samples. If the field and trip blanks contain high concentrations of contaminants (e.g., greater than 2 ng of a particular POHC), the laboratory blank shall be analyzed in order to identify the source of contamination.

5.0 CALCULATIONS (for sample volume)

5.1 The following nomenclature are used in the calculation of sample volume:

P_{bar} = Barometric pressure at the exit orifice of the dry gas meter, mm (in.) Hg.

P_{std} = Standard absolute pressure, 760 mm (29.92 in.) Hg.

T_m = Dry gas meter average absolute temperature, K (°R).

T_{std} = Standard absolute temperature, 293K (528°R).

V_m = Dry gas volume measured by dry gas meter, dcm (dcf).

$V_{m(std)}$ = Dry gas volume measured by dry gas meter, corrected to standard conditions, dscm (dscf).

γ = Dry gas meter calibration factor.

5.2 The volume of gas sampled is calculated as follows:

$$V_{m(std)} = V_m \gamma \frac{T_{std}\, P_{bar}}{T_m\, P_{std}} = K_1 \gamma \frac{V_m\, P_{bar}}{T_m}$$

where:

K_1 = 0.3858 K/mm Hg for metric units, or

K_1 = 17.64 °R/in. Hg for English units.

6.0 ANALYTICAL PROCEDURE

See Method 5040.

7.0 PRECISION AND ACCURACY REQUIREMENTS

7.1 Method Performance Check

Prior to field operation of the VOST at a hazardous waste incinerator, a method performance check should be conducted using either selected volatile POHCs of interest or two or more of the volatile POHCs for which data are available. This check may be conducted on the entire system (VOST/GC/MS) by analysis of a gas cylinder containing POHCs of interest or on only the analytical system by spiking of the POHCs onto the traps. The results of this check for replicate pairs of traps should demonstrate that recovery of the analytes fall within 50% to 150% of the expected values.

7.2 Performance Audit

During a trial burn a performance audit must be completed. The audit results should agree within 50% to 150% of the expected value for each specific target compound. This audit consists of collecting a gas sample containing one or more POHCs in the VOST from an EPA ppb gas cylinder. Collection of the audit sample in the VOST may be conducted either in the laboratory or at the trial burn site. Anaysis of the VOST audit sample must be by the same person, at the same time, and with the same analytical procedure as used for the regular VOST trail burn samples. EPA ppb gas cylinders currently available for VOST Audit are shown in Table 1 below.

The audit procedure, audit equipment and audit cylinder may be obtained by writing:

Audit Cylinder Gas Coordinator (MD-77B)
Quality Assurance Division
Environmental Monitoring Systems Laboratory
U.S. Environmental Protection Agency
Research Triangle Park, NC 27711

or by calling the Audit Cylinder Gas Coordinator at (919) 541-4531.

The request for the audit must be made at least 30 days prior to the scheduled trial burn. If a POHC is selected for which EPA does not have an audit cylinder, this audit is not required.

8.0 REFERENCES

1. Protocol for the Collection and Analysis of Volatile POHCs Using VOST. EPA/600/8-84/007, March 1984.

2. Sykes, A.L., Standard Operating Procedure for Blanking Tenax and Tenax/Charcoal Sampling Cartridges for Volatile Organic Sampling Train (VOST), Radion Corporation, P.O. Box 13000, Research Triangle Park, NC 27709.

3. Validation of the Volatile Organic Sampling Train (VOST) Protocol, Vols. I and II, EPA/600/4-86/014a, January 1986.

TABLE 1: Organic Gases in the ppb Audit Repository

Group I	Ranges of cylinders currently available:
5 Organics in N_2:	7 - 90 ppb
Carbon tetrachloride	90 - 430 ppb
Chloroform	430 - 10,000 ppb
Perchloroethylene	
Vinyl chloride	
Benzene	

Group II	Ranges of cylinders currently available:
9 Organics in N_2	7 - 90 ppb
Trichloroethylene	90 - 430 ppb
1,2-Dichloroethane	
1,2-Dibromoethane	
F-12	
F-11	
Bromomethane	
Methyl ethyl ketone	
1,1,1-Trichloroethane	
Acetronitrile	

TABLE 1: Organic Gases in the ppb Audit Repository (Continued)

Group III	Ranges of cylinders currently available:
7 Organics in N_2:	7 - 90 ppb
Vinylidene chloride	90 - 430 ppb
F-113	
F-114	
Acetone	
1,4-Dioxane	
Toluene	
Chlorobenzene	

Group IV	Ranges of cylinders currently available:
6 Organics in N_2:	7 - 90 ppb
Acrylonitrile	430 - 10,000
1,3-Butadiene	
Ethylene oxide	
Methylene chloride	
Propylene oxide	
Ortho-xylene	

CHAPTER ELEVEN

GROUND WATER MONITORING

11.1 BACKGROUND AND OBJECTIVES

The hazardous waste management facility permit regulations were promulgated in July, 1982 (40 CFR 265). Subpart F of these regulations, Ground Water Protection, sets forth performance standards for ground water monitoring systems at permitted facilities. Performance standards were selected, rather than design and operating standards, because of the diversity of designs and practices appropriate in various site-specific situations. Performance standards provide more flexibility than design and operating standards because site-specific conditions can be accomodated case by case without variance procedures. However, implementation is less efficient because permit writers may need to consider a wider variety of designs and practices; furthermore, much of the variation in reported values is attributable to the variety of designs and practices currently in use.

The purpose of this Chapter is to identify certain designs and practices which meet the performance requirements in specified situations. One of the Agency's reasons for doing so is to encourage the use of more standard methods. The designs and practices which are identified as acceptable in this chapter are considered to be acceptable for the uses and conditions specified. Therefore, permit applicants need not justify their selection. Use of these designs and practices is not mandatory; owners and operators may submit applications based on other approaches. The only incentive to use the "acceptable" designs and practices is that they are already recognized by the Agency and so they need not be justified again. As this list matures, the Agency is hopeful that sources of variance due to the variety in methodology will decrease.

The provisions of this Chapter were developed recognizing that professional judgement will always be needed in designing effective monitoring systems. But, for efficiency of operation, repeated patterns of acceptance and rejection of designs and operations are identified so that the lengthy documentation need not be repeated each time. Readers will note that there are many arbitrary criteria for some "acceptable" methods and that there is little or no attempt to justify the cut-off values. This is intended. This Chapter is expected to be a living document, cautiously developed. As new criteria become identified further refinements of these values should be expected. The purposes of listing the acceptable designs and practices are to encourage use of standard techniques by making their use easier and to reduce the burden on the applicants by relieving their need to justify use of proven designs or practices. The listing establishes, in essence, blanket approvals for a limited number of techniques in those conditions for which they are known to be acceptable.

This Subsection establishes certain ground water sampling system designs and practices as being acceptable under certain conditions for use in meeting

the requirements of Subpart F (264.90 et seq.). It also lists certain practices and designs which are not acceptable. The acceptable designs and practices are listed in Paragraph 11.4, below, with specified conditions for which each may be acceptable. The proscribed practices and designs are listed in Paragraph 11.5. These are not acceptable for use in satisfaction of the permit requirements; petitions for their use must follow normal channels.

11.2 RELATIONSHIP TO THE REGULATIONS AND TO OTHER DOCUMENTS.

The regulations in Subpart F will continue to be the sole location of the performance standards for ground water monitoring systems. The provisions of this Chapter only establish the acceptability of a limited number of designs or operations. The Chapter is not intended to replace the regulations or the guidance documents which explain application of the regulations in the particular, or site-specific, situation. It is related to the guidance documents in that it will promote use of the more established procedures found in general guidance.

The contents of this Chapter will be taken from general enforcement and permitting guidance documents, and it is intended that these be consistent with all RCRA ground water monitoring guidance. The specific conditions given for the acceptable designs and precedures may not be found in the several guidance documents from which those designs and procedures are taken. Many of these conditions are arbitrarily selected. They are based on the experience of permit writers and enforcement officials. Since the conditions only affect procedural issues (whether the selection is justified or not) the rigor of their development has not been as extensive as if they were requirements.

There is one preeminent RCRA guidance document for ground water monitoring at this time: The Technical Enforcement Guidance Document. (The TEGD, finalized September 1986, is available from the Office of Waste Programs Enforcement, (202)-475-9328). This document is written for enforcement officials' use in implementing the interim status provisions, 265.90 et seq., but most of the hydrogeologic principles apply directly to permitted facilities as well as to those in interim status. The TEGD is the major source of concepts for this chapter; it is and will be the major repository of RCRA ground water monitoring principles. It is intended that nothing in this chapter conflicts with the TEGD.

Other ground water monitoring guidance documents are in circulation. Several, such as "Ground Water Monitoring Guidance for Owners and Operators of Interim Status Facilities," have been superceded by the TEGD. Others, such as the draft "Permit Writers Guidance for Ground Water Monitoring," have never been finalized and do not fully reflect Agency policy.

Other documents which may be of interest are as follows:

1. Barcelona, Michael J., James P. Gibb and Robin A. Miller, A Guide to the Selection of Materials for Monitoring Well Construction and Ground Water Sampling, Illinois State Water Survey Contract Report (ISWS) #327, EPA Contract No. EPA CR-809966-01, August 1983.

2. Benson, R.C., R.A. Glaccum, and M. R. Noel, Geophysical Techniques for Sensing Buried Waste and Waste Migration, Technos, Inc., EPA Contract No. 68-03-3050; available from National Water Well Association, Worthington, OH.

3. Handbook for Analytical Quality Control in Water and Wastewater Laboratories, EMSL, Cincinnati, EPA-600-4-79-019, March 1979 and subsequent revisions; available from EMSL, Cincinnati, OH.

4. Hazardous Waste Ground Water Task Force, Protocol for Ground Water Inspections at Hazardous Waste Treatment Storage and Disposal Facilities, April 1986.

5. Methods for the Storage and Retrieval of RCRA Ground Water Monitoring Data on STORET, Ref. Storet User Support (800-488-5985).

6. Methods of Chemical Analysis of Water and Wastes, EMSL, Cincinnati, EPA-600/4-79-020, Revised March 1983; available from EMSL, Cincinnati, OH.

7. Plumb, R.H., and C.K. Fitzsimmons, Performance Evaluation of RCRA Indicator Parameters for Ground Water Monitoring, Proceedings of the First Canadian-American Conference on Hydrogeology, National Water Well Association, Worthington, OH, pp. 129-137, June 1984.

8. A Practical Guide for Ground Water Sampling, ERL, ADA, OK, EPA/600/2-85/104, Sept. 1, 1985; available from Illinois State Water Survey, Champagne, IL.

11.3 REVISIONS AND ADDITIONS

This Chapter will be revised from time to time as new technological developments and experience dictate. Each revision will be proposed before being finalized, and there will be ample time before the effective date for the revisions to be incorporated into future designs.

Applicants desiring to add particular designs or practices to the "acceptable" list, either for their own unique situation or as general provisions, or to use designs or practices on the "proscribed" list may do so by petitions.

11.4 ACCEPTABLE DESIGNS AND PRACTICES

The following designs and practices are acceptable, in the conditions described and for the purposes listed, without need for justification. Permit writers may question the existence of the condition or the definition of purpose, but not the use of the design or practice once conditions and purposes are established.

11.4.1 Site Characterisation

(a) Borehole location patterns, designed by qualified geologists, are acceptable for site characterization. Such characterizations are for general delineation of stratigraphy and flow paths and for establishing initial design of well placement, screen length, depth, etc.

Conditions: When unexpected discontinuities of major strata or pathways do not occur.

(b) Geophysical logging and other indirect measurement techniques may be used in site characterization for the limited purpose of augmenting direct observation of cuttings and corings by professional geologists.

Conditions: None.

(c) Quarterly measurements are generally satisfactory for establishing seasonal and temporal variations in flow velocity and direction for purposes of assuring that the elevations of screens are correct, of documenting the appropriateness of background well locations, and of assuring coverage of all possible downgradient pathways.

Conditions: None.

11.4.2 Well Location, Design, and Construction

(a) Downgradient well locations which result in placement in potential pathways of contaminant migration are acceptable for routine detection sampling programs. The density will vary based on the size of the pathway.

Conditions: When site characterization confirms simple homogenous hydrogeology, without discontinuities or faults in the vicinity of the wells, and when folds and fractures are not expected to channel flows past well intakes.

(b) Monitoring well screen lengths should generally not cut across several flow zones but rather furnish depth-discrete measurements. These conditions are acceptable for the purpose of obtaining samples which represent ground water quality at the point of compliance.

Conditions: When the strata of concern is $\geq$ 10' thick.

(c) Use of air rotary drilling methods is acceptable for installing monitoring wells.

Conditions: Except when drilling through contaminated upper horizons, unless precautions are taken.

(d) Fluorocarbon resins (PTFE, PFA, FEP, etc.) and stainless steel (304 or 316) are acceptable materials for sample-contact surfaces in new or replacement monitoring wells where potentially sorbing organics are of concern.

Conditions: Stainless steel may only be used in non-corrosive conditions. All new or replacement wells to be installed at a given time should be of the same material.

(e) Existing wells which do not meet the recommendations in guidance for materials or installation may be proposed for inclusion in the permit.
Conditions: When documented to be free of bias by pairing new PTFE OR stainless wells with, for instance, at least ten percent of the old, existing wells.

11.4.3 Sampling

(a) The field quality control procedures contained in Reference 4, Section 11.2 above, and those specified in Chapters 1 and 9 of this document are the only acceptable procedures.

(b) Well evacuation measured at three times the computed well casing volume is acceptable for assuring that the sample contains ground water representative of the formation.
Conditions: Evacuation measured to ±5% of the computed volume based on water surface elevation and well bottom measured immediately prior to evacuation.

(c) Samples containing less than 5 N.T.U. turbidity are acceptable for analysis when the analytic method is sensitive to turbidity (such as the analysis of metals). Samples containing greater than 5 N.T.U. are only acceptable when well development is certified by a qualified hydrogeologist as the best obtainable.
Conditions: Turbidity evaluation must accompany all potentially affected values.

(d) The sample preservation techniques presented in Table 11-1 are acceptable.

(e) The scheduled time interval between sample collections should not be greater than the computed time of travel either from the upgradient wells to the point of compliance or from the point of compliance to the property boundary.

(f) Evacuation of the well to dryness is an acceptable procedure to ensure that the sample contains representative ground water.
Conditions: When the recharge is so slow that the well will yield fewer than three well volumes before dryness but fast enough that the recharging water will not cascade down the inside of the casing.

11.4.4 Analysis and Reporting

The codes listed in Table 11-2 may be used for purposes and conditions listed.

11.5 UNACCEPTABLE DESIGNS AND PRACTICES

The following designs and practices are unacceptable in the conditions or for the purposes specified.

11.5.1 Site Characterization

Use of unsubstantiated data not meeting quality assurance criteria may not be used other than in support of general trends or to establish relationships between parameters.

Conditions: All conclusions and findings based on unconfirmed data and unsupported by quality controlled data are inadmissable as support for permit conditions or stipulations.

11.5.2 Well Location, Design, and Construction

Fabric filters should not be used as filter pack material.

11.5.3 Sampling

(a) The following devices are not generally acceptable for collecting samples for analysis:

1. Gas driven piston pump.
2. Suction lift pumps.
3. Submersible diaphragm.
4. Gas lift samplers.
5. Impeller pumps.

(b) Data obtained by unsubstantiated techniques and procedures not meeting quality assurance criteria or not conforming to quality control procedures may not be used except when attempting to describe pre-existing site conditions which are no longer observable.

11.5.4 Data Evaluation and Comparisons

Pooling upgradient or background values from diverse hydrogeologic strata in a manner which combines data from discrete or distinct sampling locations as though they were points along a continuous spectrum is not acceptable. All up-down comparisions must be between samples taken from common flow paths.

TABLE 11-1

SAMPLING AND PRESERVATION PROCEDURES FOR DETECTION MONITORING[a]

Parameter	Recommended Container[b]	Preservative	Maximum Holding Time	Minimum Volume Required for Analysis
		Indicators of Ground Water Contamination[c]		
pH	T, P, G	Field determined	None	25 mL
Specific conductance	T, P, G	Field determined	None	100 mL
TOC	G, Teflon-lined cap	Cool 4°C, HCl to pH <2	28 days	4 x 15 mL
TOX	G, amber, Teflon-lined cap	Cool 4°C, add 1 mL of 1.1M sodium sulfite	7 days	4 x 15 mL
		Ground Water Quality Characteristics		
Chloride	T, P, G	4°C	28 days	50 mL
Iron Manganese Sodium	T, P	Field acidified to pH <2 with HNO_3	6 months	200 mL
Phenols	G	4°C/H_2SO_4 to pH <2	28 days	500 mL
Sulfate	T, P, G	Cool, 4°C	28 days	50 mL
		EPA Interim Drinking Water characteristics		
Arsenic Barium Cadmium Chromium Lead Mercury Selenium Silver	T, P Dark Bottle	Total Metals Field acidified to pH <2 with HNO_3 Dissolved Metals 1. Field filtration (0.45 micron) 2. Acidify to pH <2 with HNO_3	6 months 6 months	1,000 mL 1,000 mL
Fluoride	T, P	Field acidified to pH <2 with HNO_3	28 days	300 mL
Nitrate	T, P, G	4°C/H_2SO_4 to pH <2	14 days	1,000 mL

(Continued)

TABLE 11-1 (Continued)

SAMPLING AND PRESERVATION PROCEDURES FOR DETECTION MONITORING[a]

Parameter	Recommended Container[b]	Preservative	Maximum Holding Time	Minimum Volume Required for Analysis
Endrin Lindane Methoxychlor Toxaphene 2,4 D 2,4,5 TP Silvex	T, G	Cool, 4°C	7 days	2,000 mL
Radium Gross Alpha Gross Beta	P, G	Field acidified to pH <2 with HNO_3	6 months	1 gallon
Coliform bacteria	PP, G (sterilized)	Cool, 4°C	6 hours	200 mL
		Other Ground Water Characteristics of Interest		
Cyanide	P, G	Cool, 4°C, NaOH to pH >12	14 days	500 mL
Oil and Grease	G only	Cool, 4°C H_2SO_4 to pH <2	28 days	100 mL
Semivolatile, volatile organics	T, G	Cool, 4°C	7 days	1,000 mL

[a]References: Test Methods for Evaluating Solid Waste - Physical/Chemical Methods, SW-846 (3rd edition, 1986).
Methods for Chemical Analysis of Water and Wastes, EPA-600/4-79-020.
Standard Methods for the Examination of Water and Wastewater, 16th edition (1985).

[b]Container Types:
P = Plastic (polyethylene)
G = Glass
T = Teflon
PP = Polypropylene

[c]Based on the requirements for detection monitoring (265.93), the owner/operator must collect a sufficient volume of ground water to allow for the analysis of four separate replicates.

TABLE 11-2
A LISTING AND DESCRIPTION OF CODES USED TO INDICATE THAT POLLUTANT CONCENTRATIONS WERE BELOW A CONCENTRATION WHICH CAN BE MEASURED ACCURATELY OR THAT THE POLLUTANTS WERE NOT PRESENT

Codes	Definition of the Acronyms	Examples of Use	Used to Indicate That the Pollutant Was Less Than a Limit of Detection	Used to Indicate That the Pollutant Was not Present
LOD+	Limit of detection	LOD 0.421	Yes	No
LOQ+	Limit of quantification	LOQ 2.234	Yes	No
MDL++	Method detection limit	MDL 0.631	Yes	No
LT	Less than	LT, LT 0.01 LT 0.148	Yes	No
BDL	Below detection limit	BDL, BDL 0.01 BDL 0.148	Yes	No
<		<0.01, <0.148	Yes	No
Negative signs		-0.01, -0.148	Yes	No
Trace*		Trace, T	Yes	No
K		K0.01, K0.148	Yes	No
ND*	Not detected	ND	Yes	Yes
Dashes*		—	Yes	Yes
Large numbers*		999999	Yes	Yes
Zeros*		0	Yes	Yes
Blanks*			Yes	Yes

NOTES:
1. The codes marked with a + are the codes used when the American Chemical Society methodology is applied.
2. The code marked with a ++ is the code that is used when the 40 CFR 136 methodology is applied.
3. The Codes column lists examples of low concentration designations that may be included in data submissions.
4. Several codes, marked with a *, have potential for being ambiguous. Their meaning depends on laboratory reporting protocols and could either indicate that the value was LT a limit of detection or not present.

CHAPTER TWELVE

LAND TREATMENT MONITORING

12.1 BACKGROUND

A monitoring program is an essential component at any land treatment unit and should be planned to provide assurance of appropriate facility design, to act as a feedback loop to furnish guidance on improving unit management, and to indicate the rate at which the treatment capacity is being approached. Because many assumptions must be made in the design of a land treatment unit, monitoring can be used to verify whether the initial data and assumptions were correct or if design or operational changes are needed. Monitoring cannot be substituted for careful design based on the fullest reasonable understanding of the effects of applying hazardous waste to the soil; however, for existing Hazardous Waste Land Treatment (HWLT) units (which must retrofit to comply with regulations), monitoring can provide much of the data base needed for demonstrating treatment.

Figure 12-1 shows the topics to be considered when developing a monitoring program. The program must be developed to provide the following assurances:

1. that the waste being applied does not deviate significantly from the waste for which the unit was designed;

2. that waste constituents are not leaching from the land treatment area in unacceptable concentrations;

3. that ground water is not being adversely affected by the migration of hazardous constituents of the waste(s); and

4. that waste constituents will not create a food-chain hazard if crops are harvested.

12.2 TREATMENT ZONE

As is depicted in Figure 12-2, the entire land treatment operation and monitoring program revolve about a central component, the treatment zone. Concentrating on the treatment zone is a useful approach to describing and monitoring a land treatment system. The treatment zone is the soil to which wastes are applied or incorporated; HWLT units are designed so that degradation, transformation, and immobilization of hazardous constituents and their metabolites occur within this zone.

In practice, setting a boundary to the treatment zone is difficult. In choosing the boundaries of the treatment zone, soil-forming processes and the associated decrease in biological activity with depth should be considered.

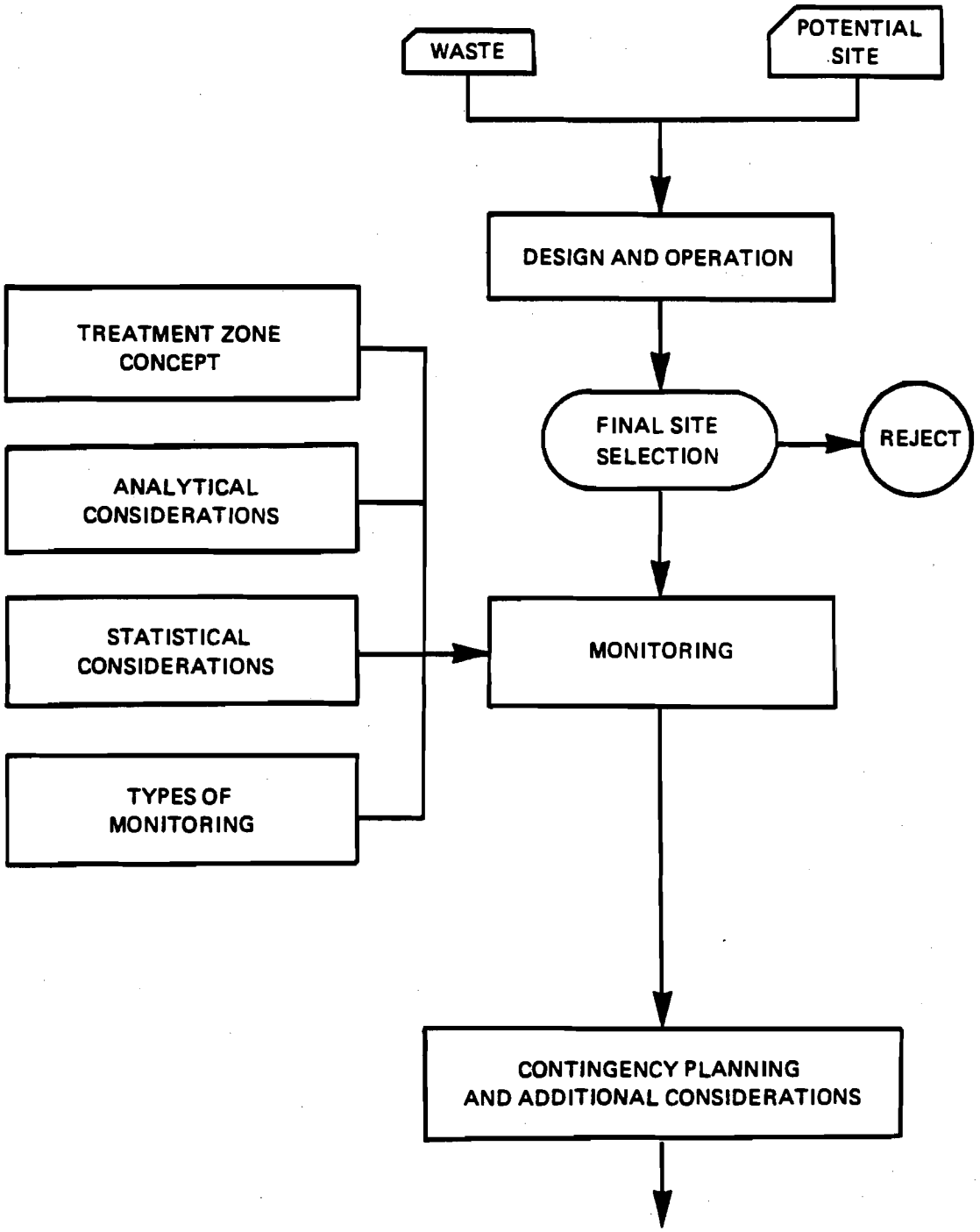

Figure 12-1. Topics to be considered in developing a monitoring program for an HWLT unit.

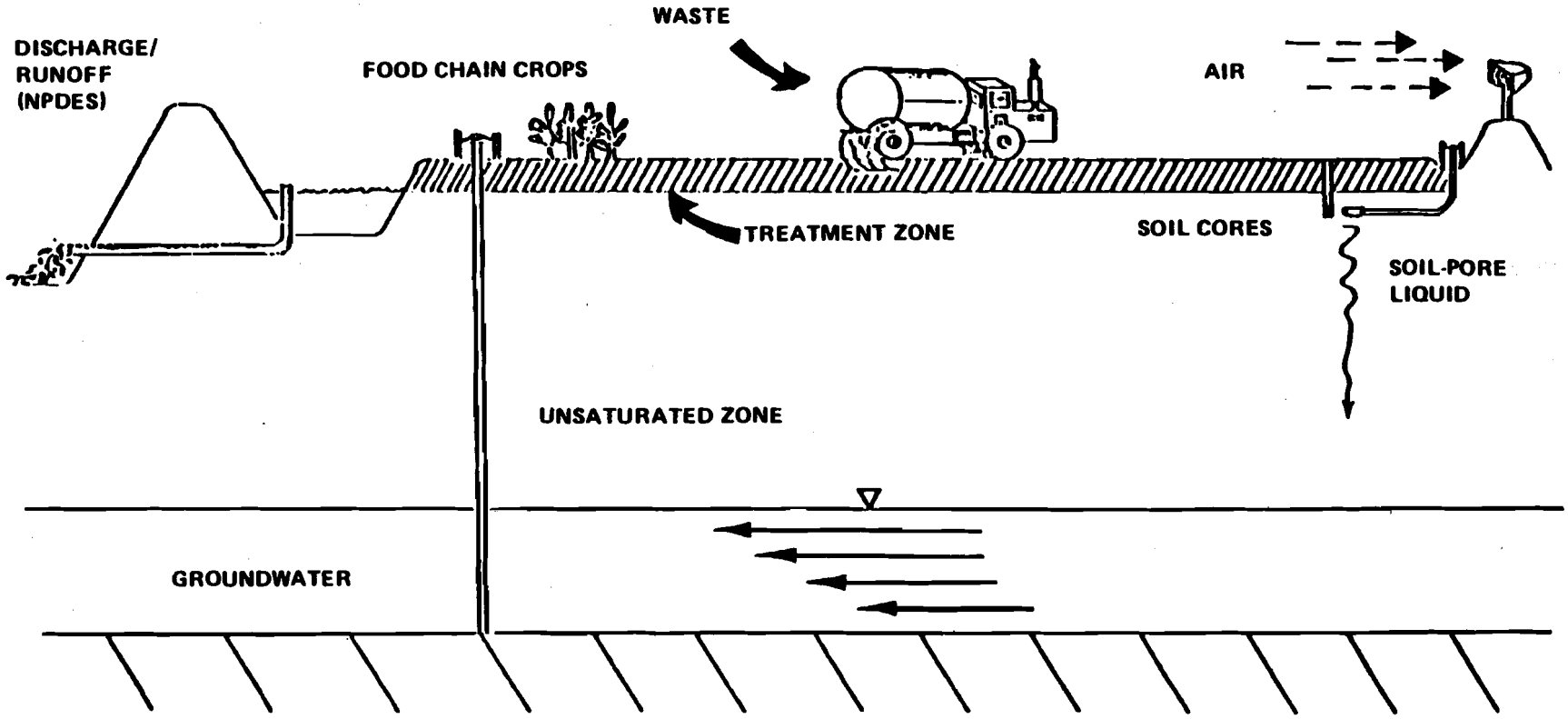

Figure 12-2. Various types of monitoring for land treatment units.

12.3 REGULATORY DEFINITION

The current regulations (U.S. EPA, 1982a) require the following types of monitoring:

1. Ground water detection monitoring to determine if a leachate plume has reached the edge of the waste management area (40 CFR 264.98).

2. Ground water compliance monitoring to determine if the facility is complying with ground water protection standards for hazardous constituents (40 CFR 264.99).

3. Monitoring of soil pH and concentration of cadmium in the waste when certain food-chain crops are grown on HWLT units where cadmium is disposed of (40 CFR 264.276).

4. Unsaturated zone monitoring, including soil cores and soil-pore liquid monitoring, to determine if hazardous constituents are migrating out of the treatment zone (40 CFR 246.278).

5. Waste analysis of all types of waste to be disposed at the HWLT unit (40 CFR 264.13).

12.4 MONITORING AND SAMPLING STRATEGY

As discussed earlier, the monitoring program centers around the treatment zone.

The frequency of sampling and the parameters to be analyzed depend on the characteristics of the waste being disposed, the physical layout of the unit, and the surface and subsurface characteristics of the site. Table 12-1 provides guidance for developing an operational monitoring program. Each of the types of monitoring is discussed below.

12.4.1 Waste Monitoring and Sampling Strategy

Waste streams need to be routinely sampled and tested to check for changes in composition. A detailed description of appropriate waste sampling techniques, tools, procedures, etc., is provided in Chapter Nine of this manual (in Part III, Sampling). These procedures should be followed during all waste sampling events. Waste analysis methods are provided in this manual. The analyst should choose the appropriate method, based on each waste and specific constituents to be tested for.

The frequency with which a waste needs to be sampled and the parameters to be analyzed depend greatly on the variables that influence the quantity and quality of the waste. When waste is generated in a batch, as would be expected from an annual or biannual cleanout of a lagoon or tank, the waste should be fully characterized prior to each application. When the waste is

TABLE 12-1 GUIDANCE FOR AN OPERATIONAL MONITORING PROGRAM AT HWLT UNITS

Media to be Monitored	Purpose	Sampling Frequency	Number of Samples	Parameters to be Analyzed
Waste	Quality Change.	Quarterly composites if continuous stream; each batch if intermittent generation.	One	At least rate and capacity limiting constituents, plus those within 25% of being limiting, principal hazardous constituents, pH and EC.
Soil cores (unsaturated zone)	Determine slow movement of hazardous constituents.	Quarterly	One composited from two per 1.5 ha (4 ac); minimum of 3 composited from 6 per uniform area.	All hazardous constituents in the waste or the principal hazardous constituents, metabolites of hazardous constituents, and nonhazardous constituents of concern.
Soil-pore liquid (unsaturated zone)	Determine highly mobile constituents.	Quarterly, preferably following leachate generating precipitation snowmelt.	One composited from two samplers per 1.5 ha (4 ac); minimum of 3 composited from 6 per uniform area.	All hazardous constituents in the waste or the principal hazardous constituents, mobile metabolites of hazardous constituents, and important mobile nonhazardous constituents.
Groundwater	Determine mobile constituents.	Semiannually	Minimum of four suggested--one upgradient, three downgradient.	Hazardous constituents and metabolites or select indicators.
Vegetation (if grown for food chain use).	Phytotoxic and hazardous transmitted constituents (food chain hazards).	Annually or at harvests.	One per 1.5 ha (4 ac) or three of processed crop before sales.	Hazardous metals and organics and their metabolites.
Runoff water	Soluble or suspended constituents.	As required for NPDES permit.	As permit requires, or one.	Discharge permit and background parameters plus hazardous organics.
Soil in the treatment zone	Determine degradation, pH, nutrients, and rate and capacity limiting constituents.	Quarterly	7-10 composited to one per 1.5 ha (4 ac).	
Air	Personnel and population health hazards.	Quarterly	Five	Particulates (adsorbed hazardous constituents) and hazardous volatiles.

generated more nearly continuously, samples should be collected and composited based on a statistical design over a period of time to ensure that the waste is of a uniform quality. For example, wastes that are generated continuously could be sampled weekly or daily on a flow-proportional basis and composited and analyzed quarterly or monthly. When no changes have been made in the operation of the plant or the treatment of the waste which could significantly alter concentration of waste constituents, the waste should, at a minimum, be analyzed for (1) the constituents that restrict the annual application rates (RLC) and the allowable cumulative applications (CLC), (2) the constituents that are within 25% of the level at which they would be limiting, and (3) all other hazardous constituents that have been shown to be present in the waste in the initial waste characterization. Because synergism and antagonism as well as unlisted waste metabolites can create hazards that cannot be described by chemical analysis alone, routine multigenicity testing may be performed if the treatment demonstration has indicated a possible problem. In addition, waste should be analyzed as soon as possible after a change in operations that could affect the waste characteristics.

12.4.2 Ground Water Monitoring and Sampling Strategy

To ensure that irreparable ground water damage does not occur as a result of HWLT, it is necessary that the ground water quality be monitored. Ground water monitoring supplements the unsaturated zone monitoring system but does not replace it. A contamination problem first detected in the leachate water may indicate the need to alter the management program, and ground water can then be observed for the same problem. It is through the successful combination of these two systems that accurate monitoring of vertically moving constituents can be achieved. Ground water monitoring requirements are discussed in Chapter Eleven of this manual.

12.4.3 Vegetation Monitoring and Sampling Strategy

Where food-chain crops are to be grown, analysis of the vegetation at the HWLT unit will aid in ensuring that harmful quantities of metals or other waste constituents are not being accumulated by, or adhering to surfaces of, the plants. Although a safety demonstration before planting is required (U.S. EPA, 1982a), operational monitoring is recommended to verify that crop contamination has not occurred. Vegetation monitoring is an important measurement during the post-closure period where the area may possibly be used for food or forage production. Sampling should be done annually or at each harvest. The concentrations of metals and other constituents in the vegetation will change with moisture content, stage of growth, and the part of the plant sampled, and thus results must be carefully interpreted. The number of samples to analyze is again based on a sliding scale similar to that used for sampling soils. Forage samples should include all aerial plant parts, and the edible parts of grain, fruit, or vegetation crops should be sampled separately.

12.4.4 Runoff Water Monitoring and Sampling Strategy

If runoff water analyses are needed to satisfy NPDES permit conditions (National Pollution Discharge Elimination System, U.S. EPA, 1981), a monitoring program should be instituted. This program would not be covered under RCRA hazardous waste land disposal requirements, but it would be an integral part of facility design. The sampling and monitoring approach will vary, depending on whether the water is released as a continuous discharge or as a batch discharge following treatment to reduce the hazardous nature of the water. Constituents to be analyzed should be specified in the NPDES permit.

When a relatively continuous flow is anticipated, sampling must be flow proportional. A means of flow measurement and an automated sampling device are a reasonable combination for this type of monitoring. Flow can be measured using a weir or flume (U.S.D.A., 1979) for overload flow-water pretreatment systems and packaged water treatment plants, and in-line flow measurement may be an additional option on the packaged treatment systems. The sampling device should be set up to obtain periodic grab samples as the water passes through the flow-rate measuring device. A number of programmable, automated samplers that can take discrete or composite samples are on the market.

For batch treatment, such as mere gravity separation or mechanically aerated systems, flow is not so important as is the hazardous constituent content of each batch. Sampling before discharge would, in this case, involve manual pond sampling, using multiple grab samples. The samples would preferably represent the entire water column to be discharged in each batch rather than a single depth increment. Statistical procedures should again be used for either treatment and discharge approach.

12.4.5 Unsaturated Zone Monitoring and Sampling Strategy

The unsaturated zone is described as the layer of soil or parent material separating the bottom of the treatment zone and the seasonal high-water table or ground water table and is usually found to have a moisture content less than saturation. In this zone, the movement of moisture may often be relatively slow in response to soil properties and prevailing climatic conditions; however, in some locations, soils and waste management practices may lead to periods of heavy hydraulic loading that could cause rapid downward flux of moisture.

An unsaturated zone monitoring plan should be developed for two purposes: (1) to detect any significant movement of hazardous constituents out of the system, and (2) to furnish information for management decisions. In light of the variability in soil-water flux and the mobility of hazardous waste constituents, the unsaturated zone monitoring plan should include sampling the soil to evaluate relatively slow-moving waste constituents (soil core monitoring) and sampling the soil-pore liquid to evaluate fast-moving waste constituents. Monitoring for hazardous constituents should be performed on a representative background plot(s) until background levels are established and

immediately below the treatment zone (active portion). The number, location, and depth of soil core and soil-pore liquid samples taken must allow an accurate indication of the quality of soil-pore liquid and soil below the treatment zone and in the background area. The frequency and timing of soil-pore liquid sampling must be based on the frequency, time, and rate of waste application; proximity of the treatment zone to ground water; soil permeability; and amount of precipitation. The data from this program must be sufficient to determine if statistically significant increases in hazardous constituents (or selected indicator constituents) have occurred below the treatment zone. Location and depth of soil core and soil-pore liquid samples follow the same reasoning, but the number, frequency, and timing of soil core sampling differs somewhat from that required for soil-pore liquid sampling. Thus, the unique aspects of these topics will be considered together with discussions of techniques for obtaining the two types of samples.

12.4.5.1 Location of Samples

Soil characteristics, waste type, and waste application rate are all important factors in determining the environmental impact of a particular land treatment unit or part of a unit on the environment. Therefore, areas of the land treatment unit for which these characteristics are similar (i.e., uniform areas) should be sampled as a single monitoring unit. A uniform area is defined as an area of the active portion of a land treatment unit which is composed of soils of the same soil series (U.S.D.A., 1975) and to which similar wastes or waste mixtures are applied at similar application rates. If, however, the texture of the surface soil differs significantly among soils of the same series classification, the phase classification of the soil should be considered in defining "uniform areas." A certified professional soil scientist should be consulted in designating uniform areas.

Based on that definition, it is recommended that the location of soil core sampling or soil-pore liquid monitoring devices within a given uniform area be randomly selected. Random selection of samples ensures a more accurate representation of conditions within a given uniform area. It is convenient to spot the field location for soil core and soil-pore liquid devices by selecting random distances on a coordinate system and using the intersection of the two random distances as the location at which a soil core should be taken or a soil-pore liquid monitoring device installed. This system works well for fields of both regular and irregular shape because the points outside the area of interest are merely discarded and only the points inside the area are used in the sample.

The location within a given uniform area of a land treatment unit (i.e., active portion monitoring) at which a soil core should be taken or a soil-pore liquid monitoring device installed should be determined using the following procedure:

1. Divide the land treatment unit into uniform areas under the direction of a certified professional soil scientist.

2. Set up coordinates for each uniform area by establishing two base lines at right angles to each other which intersect at an arbitrarily selected origin, for example, the southwest corner. Each baseline should extend far enough for all of the uniform area to fall within the quadrant.

3. Establish a scale interval along each base line. The units of this scale may be feet, yards, meters, or other units, depending on the size of the uniform area, but both base lines should have the same units.

4. Draw two random numbers from a random-number table (available in most basic statistics books). Use these numbers to locate one point along each of the base lines.

5. Locate the intersection of two lines drawn perpendicular to the base lines through these points. This intersection represents one randomly selected location for collection of one soil core, or for installation of one soil-pore liquid device. If this location at the intersection is outside the uniform area, disregard and repeat the above procedure.

6. For soil core monitoring, repeat the above procedure as many times as necessary to obtain the desired number of locations within each uniform area of the land treatment unit. This procedure for randomly selecting locations must be repeated for each soil core sampling event but will be needed only once in locating soil-pore liquid monitoring devices.

Locations for monitoring on background areas should also be randomly determined. Again, consult a certified professional soil scientist in determining an acceptable background area. The background area must have characteristics (including soil series classification) similar to those present in the uniform area of the land treatment unit it is representing, but it should be free from possible contamination from past or present activities that could have contributed to the concentrations of the hazardous constituents of concern. Establish coordinates for an arbitrarily selected portion of the background area and use the above procedure for randomly choosing sampling locations.

12.4.5.2 Depth of Samples

Because unsaturated zone monitoring is intended to detect pollutant migration from the treatment zone, samples should logically be obtained from immediately below this zone. Care should be taken to ensure that samples from active areas of the land treatment unit and background samples are monitoring similar horizons or layers of parent material. Because soils seldom consist of smooth, horizontal layers, but are often undulating, sloped, and sometimes discontinuous, it would be unwise to specify a single depth below the land surface to be used for comparative sampling. A convenient method for choosing

sampling depths is to define the bottom of the treatment zone as the bottom of a chosen diagnostic solid horizon and not as a rigid depth. Sampling depth would then be easily defined with respect to the bottom of the treatment zone. At a minimum, soil core and soil-pore liquid sampling should monitor within 30 cm (12 in.) of the bottom of the treatment zone. Additional sampling depths may be desirable, for instance, if analytical results are inconclusive or questionable. Core samples should include only the 0- to 15-cm increment below the treatment zone, whereas soil-pore liquid samplers should be placed so that they collect liquid from anywhere within this 30-cm zone.

12.4.5.3 Soil Core Sampling Techniques

Soil Cores

Waste constituents may move slowly through the soil profile for a number of reasons, such as the lack of sufficient soil moisture to leach through the system, a natural or artificially occurring layer or horizon of low hydraulic conductivity, or waste constituents that exhibit only a low to moderate mobility relative to water in soil. Any one or a combination of these effects can be observed by soil core monitoring. Based on the treatment zone concept, only the portions of soil cores collected below the treatment zone need to be analyzed. The intent is to demonstrate whether there are significantly higher concentrations of hazardous constituents in material below the treatment zone than in background soils or parent material.

Soil core sampling should proceed according to a definite plan with regard to number, frequency, and technique. Previous discussions of statistical considerations should provide guidance in choosing the number of samples required. Background values for soil core monitoring should be established by collecting at least eight randomly selected soil cores for each soil series present in the treatment zone. These samples can be composited in pairs (from immediately adjacent locations) to form four samples for analysis. For each soil series, a background arithmetic mean and variance should be calculated for each hazardous constituent. For monitoring the active portion of the land treatment facility, a minimum of six randomly selected soil cores should be obtained per uniform area and composited, as before, to yield three samples for analysis. If, however, a uniform area is >5 ha (12 ac), at least two randomly selected soil cores should be taken per 1.5 ha (4 ac) and composited in pairs based on location. Data from the samples in a given uniform area should be averaged and statistically compared. If analyses reveal a large variance from samples within a given uniform area, more samples may be necessary. Soil coring should be done at least semiannually, except for background sampling, which, after background values are established, may be performed as needed to determine if background levels are changing over time.

It is important to keep an accurate record of the locations from which soil core samples have been taken. Even when areas have been judged to be uniform, the best attempts at homogeneous waste application and management cannot achieve perfect uniformity. It is probable in many systems that small problem areas, or "hot spots," may occur, causing localized real or apparent pollutant migration. Examples of "apparent" migration might include small

areas where waste was applied too heavily or where the machinery on-site mixed waste too deeply. The sampling procedure itself is subject to error and so may indicate apparent pollutant migration. Therefore, anomalous data points can and should be resampled at the suspect location(s) to determine if a problem exists, even if the uniform area as a whole shows no statistically significant pollutant migration.

The methods used for soil sampling are variable and depend partially on the size and depth of the sample needed and the number and frequency of samples to be taken. Of the available equipment, oil field augers are useful if small samples need to be taken by hand, and bucket augers give larger samples. Powered coring or drilling equipment, if available, is the preferable choice because it can rapidly sample to the desired depths and provide a clean, minimally disturbed sample for analysis. Due to the time involved in coring to 1.5 m, and sometimes farther, powered equipment can often be less costly than hand sampling. In any case, extreme care must be taken to prevent cross contamination of samples. Loose soil or waste should be scraped away from the surface to prevent it from contaminating samples collected from lower layers. The material removed from the treatment zone portion of the borehole can be analyzed, if desired, to evaluate conditions in the treatment zone. It is advisable to record field observations of the treatment zone even if no analysis is done. Finally, boreholes absolutely must be backfilled carefully to prevent hazardous constituents from channeling down the hole. Native soil compacted to about field bulk density, clay slurry, or other suitable plug material may be used.

Sample handling, preservation, and shipment should follow a chain-of-custody procedure and a defined preservation method such as is found in Chapter Nine of this manual or in the analytical section of EPA document SW-874, Hazardous Waste Land Treatment (U.S. EPA, 1983). If more sample is collected than is needed for analysis, the volume should be reduced by either the quartering or riffle technique. (A riffle is a sample-splitting device designed for use with dried ground samples.)

The analysis of soil cores must include all hazardous constituents that are reasonably expected to leach or the principal hazardous constituents (PHCs) that generally indicate hazardous constituent movement (U.S. EPA, 1982a).

Soil-Pore Liquid

Percolating water added to the soil by precipitation, irrigation, or waste applications may pass through the treatment zone and may rapidly transport some mobile waste constituents or degradation products through the unsaturated zone to the ground water. Soil-pore liquid monitoring is intended to detect these rapid pulses of contaminants (often immediately after heavy precipitation events) that are not likely to be observed through the regularly scheduled analysis of soil cores. Therefore, the timing of soil-pore liquid sampling is a key to the usefulness of this technique. Seasonability is the

rule with soil-pore liquid sample timing (i.e., scheduled sampling cannot be on a preset date, but must be geared to precipitation events). Given that sampling is done soon after leachate-generating precipitation or snowmelt, the frequency also varies depending on site conditions. As a starting point, sampling should be done quarterly. More frequent sampling may be necessary at units located in areas with highly permeable soils or high rainfall, or at which wastes are applied very frequently. The timing of sampling should be geared to the waste application schedule as much as possible.

At land treatment units where wastes are applied infrequently (i.e., only once or twice a year) or where leachate-generating precipitation is highly seasonal, quarterly sampling and analysis of soil-pore liquid may be unnecessary. Because soil-pore liquid sampling is instituted primarily to detect fast-moving hazardous constituents, monitoring for these constituents many months after waste application may be useless. If fast-moving hazardous constituents are to migrate out of the treatment zone, they will usually migrate within at least 90 days following waste application, unless little precipitation or snowmelt has occurred. Therefore, where wastes are applied infrequently or leachate generation is seasonal, soil-pore liquid may be monitored less frequently (semiannually or annually). A final note about timing is that samples should be obtained as soon as liquid is present. The owner or operator should check the monitoring devices for liquid within 24 hr of any significant rainfall, snowmelt, or waste application.

The background concentrations of hazardous constituents in the soil-pore liquid should be established by installing two monitoring devices at random locations for each soil series present in the treatment zone. Samples should be taken on at least a quarterly basis for at least one year and can be composited to give one sample per quarter. Analysis of these samples should be used to calculate an arithmetic mean and variance for each hazardous constituent. After background values are established, additional soil-pore liquid samples should occasionally be taken to determine if the background values are changing over time.

The number of soil-pore liquid samplers needed is a function of site factors that influence the variability of leachate quality. Active, uniform areas should receive, in the beginning, a minimum of six samplers per uniform area. For uniform areas >5 ha, at least two samplers per 1.5 ha (4 ac) should be installed. Samples may be composited in pairs based on location to give three samples for analysis. The number of devices may have to be adjusted up (or down) as a function of the variability of results.

To date, most leachate collection has been conducted by scientists and researchers, and there is not an abundance of available field equipment and techniques. The U.S. EPA (1977) and Wilson (1980) have prepared reviews of pressure vacuum lysimeters and trench lysimeters. The pressure vacuum lysimeters are much better adapted to field use and have been used to monitor pollution from various sources (Manbeck, 1975; Nassau-Suffolk Research Task Group, 1969; The Resources Agency of California, 1963; James, 1974). These pressure vacuum samplers are readily available commercially and are the most widely used, both for agricultural and waste monitoring uses. A third type of

leachate sampler is the vacuum extractor as used in the field by Smith et al. (1977). A comparison of in situ extractors was presented by Levin and Jackson (1977).

These soil-pore liquid sampling devices are described in Chapter Nine of this manual (in Part III, Sampling).

12.4.6 Treatment Zone Monitoring and Sampling Strategy

Treatment zone monitoring of land treatment units is needed for two purposes. One main purpose is to monitor the degradation rate of the organic fraction of the waste material and parameters significantly affecting waste treatment. Samples are needed at periodic intervals after application to be analyzed for residual waste or waste constituents. Such measurements need to be taken routinely, as specified by a soil scientist. These intervals may vary from weekly to semiannual, depending on the nature of the waste, climatic conditions, and application scheduling. The second major function of treatment zone sampling is to measure the rate of accumulation of conserved waste constituents to provide some indication of the facility's life.

The sampling schedule and number of samples to be collected may depend on management factors, but a schedule may be conveniently chosen to coincide with unsaturated zone soil core sampling. For systems that will be loaded heavily in a short period, more (and more frequent) samples may be needed to ensure that the waste is being applied uniformly and that the system is not being overloaded. About seven to ten samples from each selected 1.5-ha (4-ac) area should be taken to represent the treatment zone, and these should be composited to obtain a single sample for analysis. In addition, if there are evidently anomalous "hot spots," these should be sampled and analyzed separately.

12.4.7 Air Monitoring and Sampling Strategy

The need for air monitoring at a land treatment unit is not necessarily dictated only by the chemical characteristics of the waste. Wind dispersal of particulates can mobilize even the most immobile, nonvolatile hazardous constituents. Therefore, it is suggested that land treatment air emissions be monitored at frequent intervals to ensure the health and safety of workers and adjacent residents. This effort may be relaxed if the air emissions are positively identified as innocuous compounds or too low in concentration to have any effect. Although air monitoring is not currently required, it is strongly recommended because wind dispersal is a likely pathway for pollutant losses from a land treatment unit.

Sampling generally involves drawing air over a known surface area at a known flow rate for a specified time interval. Low-molecular-weight volatiles may be trapped by solid sorbents, such as Tenax-GC. The high-molecular-weight compounds may be sampled by Florisil, glass-fiber filters, or polyurethane foam.

12.5 ANALYSIS

12.5.1 Analytical Considerations

Parameters to be measured include pH, soil fertility, residual concentrations of degradable rate-limiting constituents (RLC), and the concentrations of residuals that limit the life of the disposal site (CLC), plus those that, if increased in concentration by 25%, would become limiting. Hazardous constituents of concern should also be monitored. Based on the data obtained, the facility management or design can be adjusted or actions taken, as needed, to maintain treatment efficiency. Projections regarding facility life can also be made and compared with original design projections. Because the treatment zone acts as an integrator of all effects, the data can be invaluable to the unit operator.

The analyst should use specific methods in this manual for determining hazardous waste constituents.

12.5.2 Response to Detection of Pollutant Migration

If significant concentrations of hazardous constituents (or PHCs) are observed below the treatment zone, the following modifications to unit operations should be considered to maximize treatment within the treatment zone:

1. Alter the waste characteristics.
2. Reduce waste application rate.
3. Alter the method or timing of waste applications.
4. Cease application of one or more particular wastes at the unit.
5. Revise cultivation or management practices.
6. Alter the characteristics of the treatment zone, particularly soil pH or organic matter content.

12.6 REFERENCES AND BIBLIOGRAPHY

12.6.1 References

1. James, T.E., Colliery Spoil Heaps, in J.A. Coler (ed.), Ground Water Pollution in Europe, pp. 252-255, Water Information Center, Port Washington, New York, 1974.

2. Levin, M.J. and D.R. Jackson, A Comparison of In Situ Extractors for Sampling Soil Water, Soil Sci. Soc. Amer. J., 41, 535-536 (1977).

3. Manbeck, D.M., Presence of Nitrates Around Home Waste Disposal Sites, Annual Meeting Preprint Paper No. 75-2066, Am. Soc. Agr. Engr., 1975.

4. Nassau-Suffolk Research Task Group, Final report of the Long Island Ground Water Pollution Study, New York State Dept. of Health, Albany, New York, 1969.

5. Permit Guidance Manual on Hazardous Waste Land Treatment Demonstration, EPA/530-SW-84-015.

6. Permit Guidance Manual on Unsaturated Zone Monitoring for Hazardous Waste Land Treatment Units, EPA/530-SW-84-016.

7. Smith, J.L., D.B. McWhorter, and R.C. Ward, Continuous Subsurface Injection of Liquid Dairy Manure, U.S. Environmental Protection Agency, EPA-600/2-77-117, PB 272-350/OBE, 1977.

6. The Resources Agency of California, Annual Report on Dispersion and Persistance of Synthetic Detergent in Ground Water, San Bernadino and Riverside Counties, in a report to the State Water Quality Control Board, Dept. of Water Resources, Interagency Agreement No. 12-17, 1963.

7. U.S. Department of Agriculture, Soil Taxonomy, A Basic System of Soil Classification for Making and Interpreting Soil Surveys, Soil Conservation Service, U.S.D.A. Agriculture Handbook No. 436, U.S. Government Printing Office, Washington, D.C., 1975.

8. U.S. Department of Agriculture, Field Manual for Research in Agricultural Hydrology, U.S.D.A. Agricultural Handbook No. 224, U.S. Government Printing Office, Washington, D.C., 1979.

9. U.S. Environmental Protection Agency, Procedures Manual for Ground Water Monitoring at Solid Waste Disposal Facilities, Office of Solid Waste, SW-616, 1977.

10. U.S. Environmental Protection Agency, Criteria and Standards for the National Pollutant Discharge Elimination System, Title 40 Code of Federal Regulations Part 125, U.S. Government Printing Office, Washington, D.C., 1981.

11. U.S. Environmental Protection Agency, Hazardous Waste Management System -- Permitting Requirements for Land Disposal Facilities, Federal Register 47(143), 32274-32388 (July 26, 1982).

12. U.S. Environmental Protection Agency, Hazardous Waste Land Treatment, Office of Solid Waste and Emergency Response, Washington, D.C., SW-874, 1983.

13. Wilson, L.G., Monitoring in the Vadose Zone: A Review of Technical Elements and Methods, U.S. Environmental Protection Agency, EPA-600/7-80-134, 1980.

12.6.2 Bibliography

1. Corey, P.R., Soil Water Monitoring, Unpublished Report to Dept. of Agr. Engr., Colorado State Univ., Ft. Collins, Colorado, 1974.

2. Duke, H.R., and H.R. Haise, Vacuum Extractors to Assess Deep Percolation Losses and Chemical Constituents of Soil Water, Soil Sci. Soc. Am. Proc. 37, 963-4 (1973).

3. Parizek, R.R. and B.E. Lane, Soil-water Sampling Using Pan and Deep Pressure-Vacuum Lysimeters, J. Hydr. 11, 1-21 (1970).

4. Scalf, M.R., J.F. McNabb, W.J. Dunlap, R.L. Cosby, and J. Fryberger, Manual of Ground Water Sampling Procedures, National Water Well Association, Worthington, Ohio, 1981.

5. Silkworth, D.R. and D.F. Grigal, Field Comparison of Soil Solution Samplers, Soil Sci. Soc. Am. J. 45, 440-442 (1981).

6. Trout, T.J., J.L. Smith, and D.B. McWhorter, Environmental Effects of Land Application of Digested Municipal Sewage Sludge, Report submitted to City of Boulder, Colorado, Dept. of Agr. Engr., Colorado State Univ., Ft. Collins, Colorado, 1975.

7. Tyler, D.D. and G.W. Thomas, Lysimeter Measurements of Nitrate and Chloride Losses and No-tillage Corn, J. Environ. Qual. 6, 63-66 (1977).

8. U.S. Department of the Interior, Ground Water Manual, Bureau of Reclamation, U.S. Government Printing Office, Washington, D.C., 1977.

9. U.S. Environmental Protection Agency, Hazardous Waste Management Systems -- Identification and Listing of Hazardous Waste, Federal Register 45 (98), 33084-33133 (May 19, 1980).

10. U.S. Environmental Protection Agency, Ground Water Monitoring Guidance for Owners and Operators of Interim Status Facilities, Office of Solid Waste and Emergency Response, Washington, D.C., SW-963, 1982b.

11. Wood, W.W., A Technique Using Porous Cups for Water Sampling at Any Depth in the Unsaturated Zone, Water Resources Research 9, 486-488 (1973).

CHAPTER THIRTEEN

INCINERATION

13.1 INTRODUCTION

Environmental Protection Agency regulations require owners or operators of hazardous waste incinerators to perform specific testing prior to issuance of a final permit. These regulations are contained in 40 CFR Parts 264.340-264.347, 270.19, and 270.62.

The regulations require that incinerated hazardous wastes be destroyed with an efficiency of 99.99% or higher. In order to obtain a permit to incinerate hazardous wastes, owners or operators must demonstrate that their incinerator can operate at the required efficiency (usually referred to as destruction and removal efficiency, or DRE). This demonstration will most often involve a "trial" burn. Prior to the trial burn, the owner or operator must test the hazardous waste being evaluated for incineration and determine the presence and concentration of Appendix VIII constituents, along with other parameters. The analytical results obtained will allow the owner or operator to determine the principal organic hazardous constituents (POHCs) in the waste. These POHCs will usually be those compounds in the waste that are difficult to burn, toxic, and found at reasonably high concentrations in the waste. During the trial burn, the POHCs are monitored to determine whether the incinerator is meeting the required DRE.

The owner or operator will then prepare an incineration permit application, which is submitted to the appropriate state and EPA region. Contents of permits are listed in Sections 270.14, 270.19, and 270.62 of the RCRA regulations. As part of the permit application, the owner or operator will provide the waste analysis information, propose certain POHCs for the trial burn, and specify the sampling and analysis methods that will be used to obtain the trial burn data. This portion of the permit application is called the "trial burn plan." The regulatory agency(ies) will review the application and trial burn plan, make any necessary modifications, and authorize the owner to conduct the trial burn. After the trial burn, the results are submitted to the permit issuance authority and, assuming all requirements are met, a final incineration permit will be issued. The permit contains all the information pertaining to the licensed operation of the incinerator, and the owner or operator must comply with whatever conditions are specified in the permit. The rest of this chapter will explain the various sampling and analysis strategies that can be used during the trial burn and how analysis data can be used to obtain a final permit.

13.2 REGULATORY DEFINITION

As explained earlier, incinerator regulations are contained in 40 CFR Parts 264.340-.347, 270.19, and 270.62. Because Part 264 contains general requirements for hazardous waste incineration, it will not be discussed here.

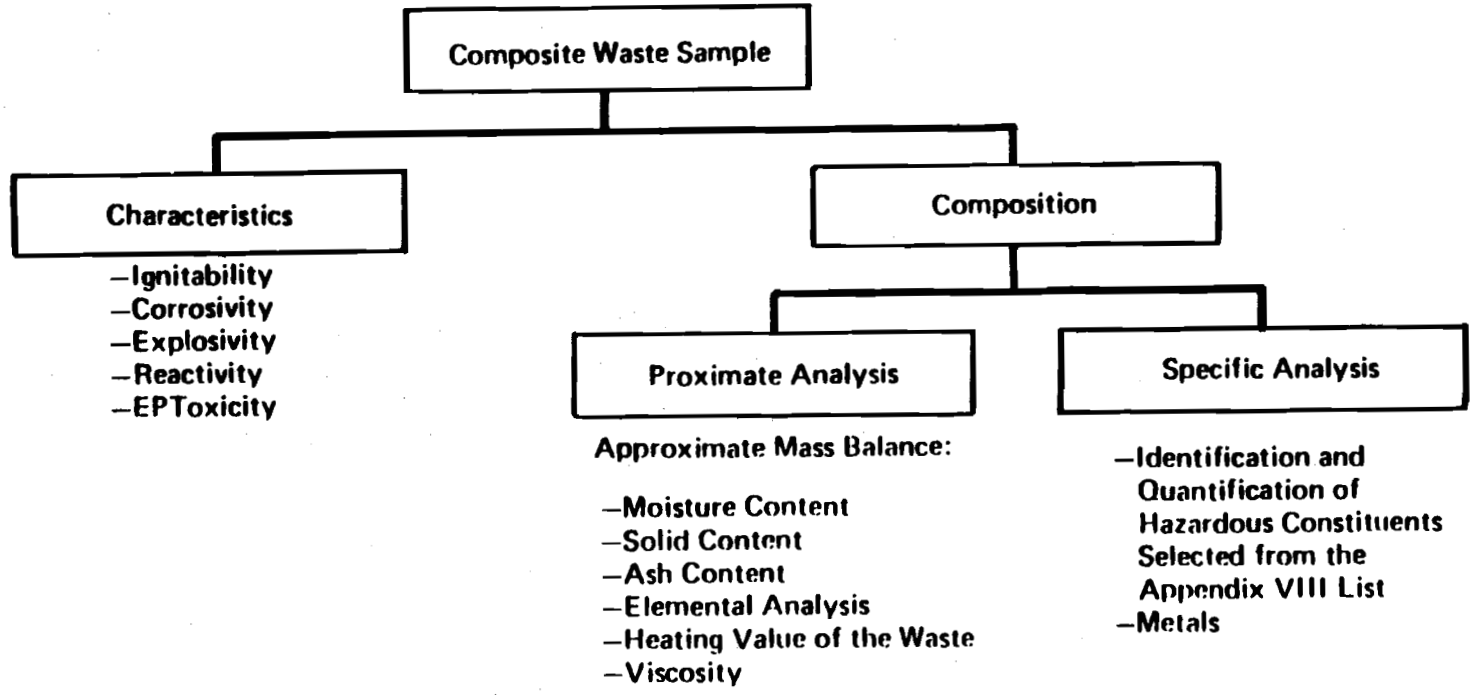

Figure 13-1 Overview of the analytical approach for waste characterization.

13.3.2.2 Proximate Analysis

The proximate analysis provides data relating to the physical form of the waste and an estimate of its total composition. This analysis includes determination of:

1. Moisture, solids, and ash content.

2. Elemental composition (carbon, nitrogen, sulfur, phosphorus, fluorine, chlorine, bromine, iodine to 0.1% level).

3. Heating value of the waste.

4. Viscosity.

Some or all of this information may satisfy the waste analysis requirements of the Part 264 regulations, as well as be responsive to the General Waste Analysis requirements of Subpart B. The elemental composition data allow one to predict if a high concentration of potentially significant combustion products (NO_x, SO_x, P_2O_5, hydrogen halides, and halogens) might be formed during incineration. These data also facilitate an informed selection of the Appendix VIII hazardous constituents that might be present in the waste by indicating whether the overall waste composition and hence the types of components present are consistent with expectations based on best professional judgment. For example, if bromine were not present in the waste, any organobromine compounds from Appendix VIII at levels of 1,000 mg/kg would be excluded from specific analysis.

13.3.2.3 Specific Analysis

The specific analysis portion of the waste characterization scheme provides qualitative confirmation of the presence and identity of the Appendix VIII constituents that might reasonably be expected to be present in the waste, based on professional judgment or on the results of proximate analysis. It is important to note that specific analysis does not involve screening every waste sample for all Appendix VIII hazardous components. A preliminary judgment is made as to the compounds or types of compounds that are actually present.

For the specific organic analyses, a high-resolution separation technique (fused-silica capillary gas chromatography) and a high-specificity detection technique (mass spectrometry) are used wherever possible. This approach ensures qualitative and quantitative analysis for a variety of waste types and process chemistries.

Specific analysis methods in this manual can be used for Appendix VIII constituents. Generally, the methods of choice for Appendix VIII components will be:

Method 6010	(Inductively Coupled Plasma Method)
Method 8270	(GC/MS Method for Semivolatile Organics: Capillary Column Technique)
Method 8240	(GC/MS Method for Volatile Organics)

Other more specific methods contained in this manual may be used; however, they cannot screen for a wide range of compounds. For example, Method 8010 can detect only those volatile compounds containing halogen.

13.3.3 Selection of POHCs

The criteria for selection of POHCs (typically one to six specific constituents per waste feed) include:

1. The expected difficulty of thermal degradation of the various hazardous organic constituents in the waste.

2. The concentration of those constituents in the waste.

It is anticipated that the designation of POHCs will be negotiated on a case-by-case basis for each permit application. It is important to note that it is not necessarily, or even generally, true that all Appendix VIII compounds present in the waste will be designated as POHCs. The intent is to select a few specific compounds as indicators of incinerator performance. The selected compounds should provide a sufficiently stringent test of the incinerator's performance to ensure that incineration of the waste can be carried out in an environmentally sound fashion. This criterion mandates selection of the more thermally stable constituents as POHCs.

At the same time, however, it is necessary that the designated POHCs be present in the waste in sufficiently high concentrations in order to be detected in the stack gas. This is a particularly important constraint for wastes that are to be incinerated with substantial quantities of auxiliary fuel, which effectively dilute the POHCs in the exhaust gas. Although the burning of auxiliary fuel might not affect the mass emission rate of POHCs, it would lead to an increased volumetric flow of stack gas and thus to a decreased concentration of POHCs at the stack. This lower concentration directly affects the detection limit achievable for a given stack-gas sample size (e.g., between 5 m^3 and 30 m^3).

It is recommended that, whenever possible, the permit writer select POHCs present in the waste at 1,000 mg/kg or higher. If it is considered desirable to designate as a POHC a thermally stable compound present at the hundreds-of-parts-per-million level, the trial burn permit application must include calculations and supporting data to indicate that 0.01% of the mass feed rate of that component in the waste could in fact be detected in the stack effluent. A waste concentration of 100 mg/kg probably represents a practical lower level below which determination of 99.99% DRE may require extraordinary

sampling analysis and quality control procedures, which may significantly increase the sampling and analysis costs for that trial burn.

For a waste material that is a listed hazardous waste under RCRA regulations (40 CFR Part 261, Subpart D), the constituents that caused the Administrator to list the waste as toxic (tabulated in Appendix VII of 40 CFR Part 261) would be logical candidates for designation as POHCs, if these constituents are organic chemicals.

13.4 STACK-GAS EFFLUENT CHARACTERIZATION STRATEGY

The overall strategy for hazardous-waste-incinerator stack-gas effluent characterization to determine compliance with Part 264 performance standards is to collect replicate 3- to 6-hr, 5- to 30-m^3 samples of stack gas using a comprehensive sampling train, such as the EPA Modified Method 5 Sampling Train (MM5), the EPA/IERL-RTP Source Assessment Sampling System (SASS), or, for the volatile species, the Volatile Organic Sampling Train (VOST). These three strategies are described in detail in Chapter Ten (Methods 0010, 0020, and 0030). Any of the comprehensive sampling trains provides a sample sufficient for determination of particulate mass loading, concentrations of particulate and low-volatility vapor-phase organics, and concentrations of particulate and volatile metals. The VOST is used to collect the sample to be analyzed for volatile organic species. For burns of wastes that could also produce significant emissions of HCl, an MM5 type of train is used to collect and quantify HCl in the stack gas.

Figure 13-2 shows an overview of the analysis scheme for stack-gas samples. A separate sample (cyclone and particulate catch) will be used for determination of particulate mass loading and extraction of nonvolatile organic components. Heating during the particulate determination may drive off semivolatile organics. Volatile organic components of the stack gas will be collected using the VOST.

The directed analysis shown in Figure 13-2 is performed on triplicate samples. Although analysis of only two samples would allow an average level of a POHC to be determined, at least three samples should be analyzed so that an error bound for the measured values can be computed. The incremental cost of the replicate sampling and analysis is offset by increased confidence in the resulting data; quantitative results from a single sampling and analysis run should not generally be considered as an acceptable indicator of performance.

The survey analysis, which is a qualitative screen of the collected material to ensure that potentially hazardous but unexpected emissions do not go overlooked, need be performed on no more than one stack-gas sample. During a trial burn, the oxygen level in the stack gas must be measured using an Orsat or Fyrite analyzer, as detailed in 40 CFR Part 60, Appendix A, Method 3, so that the particulate loading may be corrected to a standard excess air level.

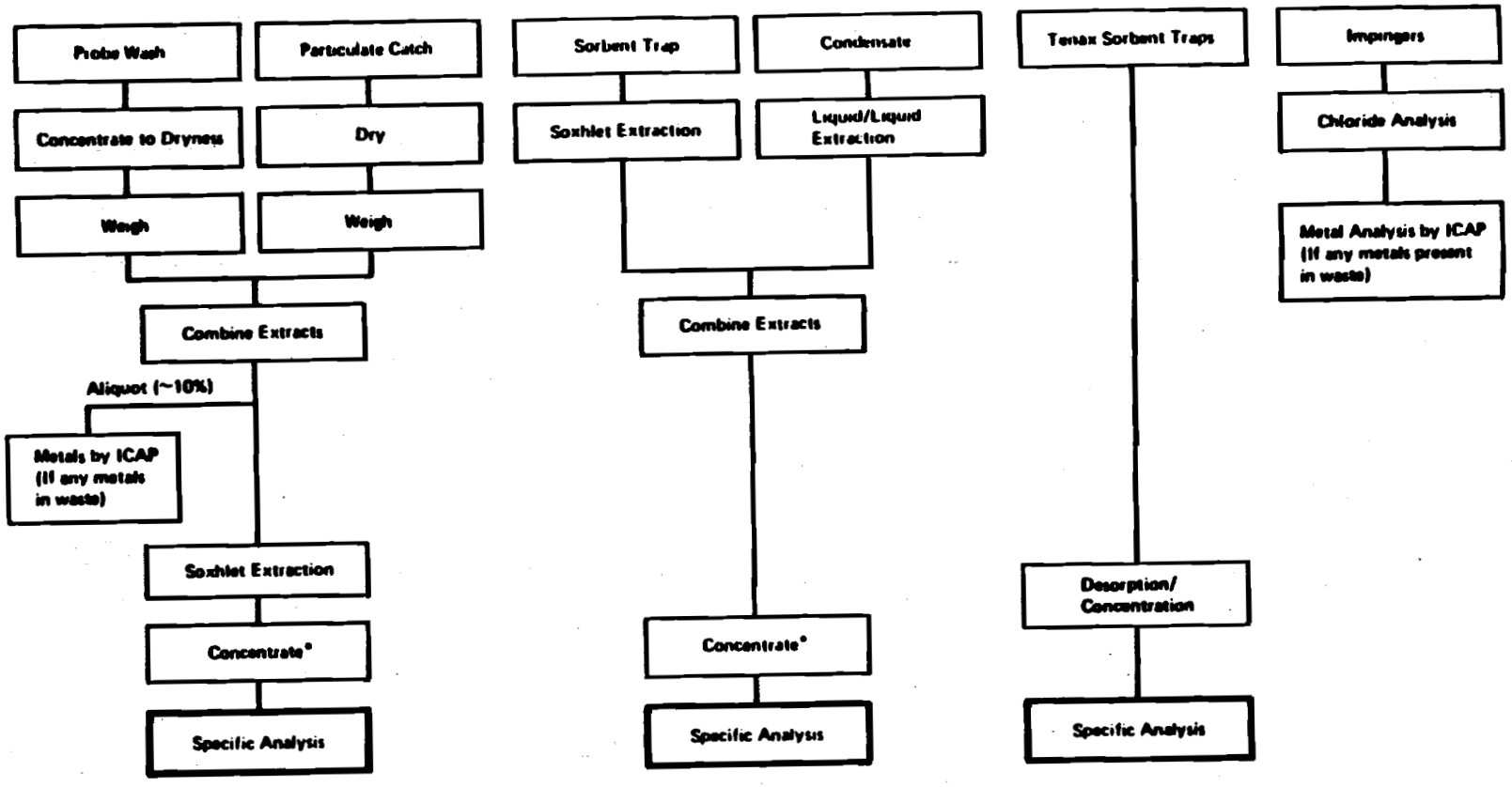

*As an alternative, the extracts from particulate and vapor portions of the train may be combined prior to analysis.

Figure 13-2 Overview of an analysis scheme for stack gas samples from a comprehensive sampling train.

For both trial and operating burns, on-line monitors (nondispersive infrared instruments) are used to provide continuous readings of carbon monoxide levels in the incinerator effluent.

13.5 ADDITIONAL EFFLUENT CHARACTERIZATION STRATEGY

The basic strategy for sampling scrubber water, ash, and other residue (if any) is to prepare composite samples from grab subsamples, collected using the same types of sampling devices and tactics as those used for waste characterization. This sampling is required only during trial burns, in accordance with 40 CFR Part 270.62. These additional effluent samples are analyzed for POHCs to determine appropriate disposal or subsequent treatment methods and to ensure that significant discharges of POHCs in other media do not go undetected.

13.6 SELECTION OF SPECIFIC SAMPLING AND ANALYSIS METHODS

The preceding discussion has briefly described the RCRA regulations that define sampling and analysis requirements for hazardous waste incineration and has presented an overview of the sampling and analysis procedures developed to meet these requirements.

This section will illustrate, by means of a hypothetical example, the transition from strategies, as described above, to methods, as described below. In the interest of clarity, the example is oversimplified, but should serve as a demonstration of how to develop and evaluate a hazardous waste incineration trial burn plan. The discussion will deal with sampling and analysis considerations only and will not address adequacy of design, operating conditions, or other engineering considerations.

13.6.1 Scenario

The owner/operator of an incineration facility seeks an RCRA permit to treat chlorinated organic waste material.

The facility is a liquid injection incinerator with a capacity of 10 x 10^6 Btu/hr and equipped with a wet scrubber for acid-gas removal. A waste oil (<0.1% chlorine) is burned as auxiliary fuel. The proposed operating conditions for hazardous waste incineration include a combustion zone temperature of 2000°F (1100°C) and a residence time of 2 sec with 150% excess air.

The waste is a still bottom from the production of perchloroethylene. Based on engineering analysis, it is expected to be a nonviscous organic liquid with a heating value >5,000 Btu/lb. The major components of the waste are expected to be highly chlorinated species such as hexachlorobenzene, hexachlorobutadiene, and other chlorinated aliphatic and aromatic compounds.

13.6.2 Strategy

There are insufficient data from other trial or operating burns to specify operating conditions under which this type of facility, when burning this type of waste, has been demonstrated to comply with the Part 264 performance criteria. Therefore, a trial burn will be required.

There are insufficient data to develop the trial burn plan available from the waste generator. Therefore, additional analyses of the waste will be necessary to support the trial burn permit application. The POHCs for which destruction and removal efficiencies are to be demonstrated in the trial burn must be designated, based on review of existing information and/or additional analysis of a representative sample of the waste.

Because the owner/operator plans to operate the facility under one set of temperature, residence time, and excess air conditions when treating hazardous waste, the trial burn will consist of three replicate tests under that set of operating conditions.

The trial burn sampling and analysis strategy must address:

1. The waste analysis requirements of 40 CFR Part 270.
2. The performance standards of 40 CFR Part 264, Subpart O.
3. The monitoring requirements of 40 CFR Part 264, Subpart O.

13.6.2.1 Sampling Strategy

During each of the three replicate tests, the following samples must be obtained:

1. One composite sample of the waste actually treated.
2. One time-averaged (3-4 hr) sample of stack gas.
3. One composite sample of spent scrubber water.

No bottom ash or fly ash streams (other than the stack particulate emissions) are expected to be generated as effluents from this facility.

13.6.2.2 Analysis Strategy

The waste must be analyzed to determine:

1. Quantity of designated trial burn POHCs.
2. Heating value of the waste.

3. Viscosity or physical form.

4. Quantity of organically bound chlorine. (This analysis is not mandatory; however, the data obtained may be helpful in determining a potential for HCl emissions.)

5. Identity and approximate quantity of known or suspected Appendix VIII constituents.

The stack gas must be analyzed to determine:

1. Quantity of designated trial burn POHCs.

2. Quantity of particulate matter emissions.

3. Quantity of hydrochloric acid emissions.

4. Carbon monoxide level.

5. Excess air level (oxygen/carbon dioxide level determination).

The scrubber water must be analyzed to determine quantities of designated trial burn POHCs.

13.6.3 Tactics and Methods

13.6.3.1 Selection of POHCs

The first step is to obtain a composite of the waste and to analyze it for Appendix VIII constituents. In this case the waste was sampled from a tank truck by taking a series of vertical cores at the available hatch location on the truck. The cores were obtained by using a Coliwasa (see Section 9.2.2.4 of Chapter Nine) and following the procedures. After the waste sample was collected, it was sent to the laboratory using chain-of-custody procedures (Section 9.2.2.7 of Chapter Nine) and was analyzed using Method 8270 (Chapter Four) (in this case the sample was directly injected with a split ratio of 100:1). The sample was also analyzed by Method 9020, Chapter Five. Table 13-1 summarizes the information that was obtained for the waste analysis. The major organic components that would appear to be candidates for selection as POHCs are listed in Table 13-2, along with relevant physical/chemical properties and recommended stack sampling and analysis methods.

The permit writer has designated hexachloro-butadiene, hexachlorobenzene, and hexachloroethane as POHCs. All three species are present in significant concentrations in the waste and will remain at >1,000 mg/kg concentration even if the waste were cut by as much as 1:10 with auxiliary fuel in order to limit the total chlorine feed rate and to maintain an adequate heating value in the total incinerator feed. Fully chlorinated species such as these are generally considered to be highly resistant to thermal degradation and thus provide an appropriate set of POHCs for DRE determination.

TABLE 13-1. INFORMATION ON COMPOSITION OF HYPOTHETICAL WASTE

Visual Inspection: The waste was a pitch-black, nonviscous liquid with obvious particulate loading. It had a pungent odor and fumed slightly when the cap was removed.

Loss on Ignition: Ignition at 900°C resulted in a 99.8% loss of mass.

Higher Heating Value: The waste would not burn in a bomb calorimeter; its higher heating value is estimated at approximately 2,000 Btu/lb.

TOX: 74.4% Cl.

GC/MS: This analysis indicates that hexachlorobutadiene is the major component (65%) and hexachlorobenzene is present at about 10% of the Total Organic Chlorine concentration. Other peaks in the chromatogram were identified as hexachloroethane (approx. 4%), tetrachloroethanes (approx. 3%), tetrachloroethylene (approx. 0.1%), plus four other chlorinated aliphatics at about 0.5% concentration of the CCl concentration.

Summary: All of the available evidence suggests that this waste contains essentially no perchloroethylene, that hexachlorobutadiene makes up about 65% of the waste, and that there are perhaps a dozen other components at 1-5% concentration. All of the minor components appear to be chlorinated, with hexachlorobenzene the most abundant.

TABLE 13-2

CANDIDATE POHCs FOR HYPOTHETICAL WASTE AND RECOMMENDED STACK SAMPLING AND ANALYSIS METHODS FOR HYPOTHETICAL TRIAL BURN

Compound (POHC)	Approx. concentration in waste (%)	B.P. (°C)	ΔH[a] (kcal/mole)	MW (g/mole)	Stack Sampling Method		Analysis Method	
					Section number	Description	Method number	Description
Hexachlorobutadiene	65	215	N/A	260.76	1.2.1.8[b]	M5 - Sorbent	8120, 8250, or 8270	GC/MS Extractables
Hexachlorobenzene	6	323	567.7	284.8	1.2.1.8[b]	M5 - Particulate and Sorbents	8120, 8250, or 8270	GC/MS Extractables
Hexachloroethane	2	186.8	173.8	236.74	1.2.1.8[b]	M5 - Sorbent	8120, 8250, or 8270	GC/MS Extractables
Tetrachloroethane[c]	1.5	130.5 (146.2)	230 (233)	167.84	1.2.1.13	VOST	8010 or 8240	GC/MS Volatiles
Tetrachloroethylene	0.1	121.0	197	165.85	1.2.1.13	VOST	8010 or 8240	GC/MS Volatiles

[a]The standard enthalpy of combustion.

[b]The SASS method (Chapter Nine, Method 0020) could also be selected. A specially fabricated glass-lined SASS train might be necessary to withstand the hydrochloric acid expected in the stack.

[c]Numbers given in parentheses refer only to 1,1,2,2-tetrachloroethane.

13.6.3.2 Selection of Sampling Methods

For sampling of wastes and liquid and solid effluents, the choice of method is based primarily on the nature of the medium. Review of available methods indicates that for dipper sampling (Chapter Nine) or sampling from the tap of the waste-feed pipe would be appropriate for collection of discrete subsamples of waste feed and of spent scrubber water at regular time intervals over the duration of each trial burn. These would then be combined to form the corresponding composite samples for each test.

For sampling of stack gas, both the nature of the medium and the nature (volatility, stability) of the POHC or other target species affect the choice of a sampling method. Table 13-2 summarizes these recommendations for the candidate POHCs in this example. Note that designation of tetrachloroethylene as a POHC in this instance would require use of VOST, although the MM5 or SASS approaches would collect all of the other candidate POHCs.

The MM5 train would also suffice to determine compliance with the two other performance standards of 40 CFR Part 264. The particulate matter emission rate can be determined from the mass of material collected in the probe wash, cyclone (if any), and filter of the MM5 train. The hydrochloric acid emission rate can be determined by using caustic scrubbing solution in the impinger portion of the MM5 train and determining the hydrochloric acid level as chloride.

In addition to the procedures chosen for the collection of POHCs, it would be necessary to specify procedures for the required monitoring for carbon monoxide and oxygen levels in the stack gas.

13.6.3.3 Selection of Analysis Methods

The analytical procedures used for qualitative identification and quantitative determination of POHCs and other target species are determined primarily by the nature (volatility, polarity) of the species sought.

This manual lists recommended analysis methods for each candidate POHC after the appropriate sample preparation steps in Methods 0010, 0020, and 0030 have been performed. Table 13-2 summarizes the recommendation for analysis of the candidate POHCs in this hypothetical example. Note that a single analytical method suffices to determine all of the hexachlorospecies of concern here although an additional method would be recommended if the analysis were to include the tetrachloroethanes and tetrachloroethylene.

13.6.4 Results and Calculations

This section illustrates the proper methods for calculating DRE, corrected particulate loading, and HCl emissions for the hypothetical example described above. Again, this example has been somewhat oversimplified for purposes of illustration.

According to 40 CFR Part 264, the DRE for each POHC is calculated as:

$$DRE = \frac{W_{in} - W_{out}}{W_{in}} \times 100\%$$

where:

W_{in} = mass feed rate of one POHC in the waste stream feeding the incinerator.

W_{out} = mass emission rate of the same POHC present in stack exhaust emissions.

13.6.4.1 Calculation of W_{in} (lb/hr):

$$W_{in} = \frac{C_W \times FR_W}{100}$$

where:

C_W = Concentration of one POHC in the waste, %.

FR_W = Mass feed rate of waste to the incinerator, lb/hr.

Assume that quantitative analysis of a representative aliquot drawn from the composite waste sample from test No. 1 gave the following concentrations:

hexachlorobutadiene	63 %
hexachlorobenzene	9.4%
hexachloroethane	1.1%

Further, assume that the thermal capacity of the facility (10×10^6 Btu/hr) was met by blending waste 1:10 with waste oil to give a feed mixture that was 8.2% chlorine and that had a heating value of 16,400 Btu/lb. The total mass feed rate to the incinerator was therefore 600 lb/hr, of which 540 lb/hr was auxiliary fuel (waste oil) and 60 lb/hr was chlorinated waste.

The W_{in} values for the three POHCs are therefore:

hexachlorobutadiene	(.63 x 60 lb/hr)	38	lb/hr
hexachlorobenzene	(.094 x 60 lb/hr)	5.6	lb/hr
hexachloroethane	(.011 x 60 lb/hr)	0.66	lb/hr

13.6.4.2 Calculation of W_{out} (lb/hr):

$$W_{out} = C_s \times ER_s \times 1.32 \times 10^{-4}$$

where:

C_s = Concentration of one POHC in the stack gas effluent, mg/dNm^3.

ER_s = Volumetric flow rate of stack gas, dNm^3/min.

1.32×10^{-4} = Conversion factor from mg/min to lb/hr.

Assume that quantitative analysis of the extract prepared from the time-integrated comprehensive sampling train sample from test No. 1 gave the following concentrations in the sampled gas:

hexachlorobutadiene	0.080 mg/m^3
hexachlorobenzene	0.020 mg/m^3
hexachloroethane	$\leq$0.004 mg/m^3

Further, assume that the average measured volumetric flow of stack gas during test No. 1 was 3,200 scfm or 90 dNm^3/min.

The W_{out} values for the three POHCs are therefore:

hexachlorobutadiene	$(.080 \times 90 \times 1.32 \times 10^{-4})$	9.5×10^{-4} lb/hr
hexachlorobenzene	$(.020 \times 90 \times 1.32 \times 10^{-4})$	2.4×10^{-4} lb/hr
hexachloroethane	$(\leq 0.004 \times 90 \times 1.32 \times 10^{-4})$	$<0.48 \times 10^{-4}$ lb/hr

13.6.4.3 Calculation of DRE:

$$DRE = \frac{W_{in} - W_{out}}{W_{in}} \times 100$$

The DRE values for the three POHCs are therefore:

hexachlorobutadiene	99.997
hexachlorobenzene	99.996
hexachloroethane	>99.993

Note that compliance with a "four-9's" performance standard could not have been demonstrated in this particular example for a component present at <1% in the waste itself (or <1,000 mg/kg in the 1:10 waste:fuel blend fed to

the incinerator) unless the detection limit for that component in the stack gas were <4 ug/m^3.

In this example, compliance with the 99.99% DRE performance standard has been demonstrated, in one test, for each of the three POHCs. If these results were supported by data from the other two replicate trial burn tests, the "four-9's" DRE could be considered to have been established.

13.6.4.4 Calculation of HCl Emissions

An incinerator burning highly chlorinated hazardous waste capable of producing significant stack-gas emissions of hydrogen chloride (HCl) must monitor and/or control HCl emissions.

The hypothetical waste in this example contains approximately 75% chlorine by weight (Table 13-1). At the proposed 60-lb/hr feed rate of waste that is blended 1:10 with auxiliary fuel for a total feed of 600 lb/hr (9.8 x 10^6 Btu/hr), the maximum HCl emission rate would be 45 lb/hr of chlorine basis or 46 lb/hr as HCl. This rate exceeds the regulatory limit of 4 lb/hr; therefore, the scrubber efficiency must be determined.

The stack emission rate of HCl can be calculated from measured values in the following manner:

$$HCl_{out} = C_{in} \times ER_s \times 1.32 \times 10^{-4}$$

where:

C_{in} = Concentration of HCl in the stack-gas sample (mg/m^3).

ER_s = Volumetric flow rate of the stack gas, m^3/min.

1.32×10^{-4} = Conversion factor from mg/min to lb/hr.

Assume that quantitative analysis of the impinger/condensate solution from the time-integrated comprehensive sampling train from test No. 1 gave 34 mg/m^3 HCl in the stack effluent.

The stack emission rate of HCl is calculated by:

$$HCl_{out} = 34 \text{ mg/m}^3 \ (90 \text{ m}^3\text{/min}) \ (1.32 \times 10^{-4})$$

$$= 0.40 \text{ lb/hr HCl.}$$

This emission level is <1% of the 46 lb/hr of HCl potentially generated from the waste, an indication that the removal efficiency of the wet scrubber was >99%.

13.6.4.5 Calculation of Particulate Loading (mg/m^3)

An incinerator-burning hazardous waste must not emit particulate matter in excess of 180 mg/dscm when corrected to an oxygen concentration of 7% in the stack gas.

Assume that prior to chemical analysis, particulate samples from the stack effluent of the hypothetical waste (from probe washes and filter catches of the time-integrated comprehensive sample train) were dried and weighed. The hypothetical particulate loading from these measurements was calculated to be 80 mg/m^3 at the actual excess air level of the stack. The excess air level was determined to be 150%, based on hypothetical measured values of oxygen (12.8%) and carbon dioxide (6.7%). Correction to standard excess air level, as specified in the Part 264 regulations, leads to a particulate loading of 140 mg/m^3 (0.06 gr/scf). This total particulate emission is in compliance with the Part 264 performance standard that specifies $\leq$180 mg/m^3 ($\leq$0.08 gr/scf).

13.6.5 Summary

Incinerator performance in this example complies with the Part 264 Subpart O Incinerator Standards as they relate to:

1. Destruction and Removal Efficiency. All three POHCs showed compliance with the 99.99% DRE performance standard.

2. Limitation on HCl Emissions. The HCl emission rate of 0.40 lb/hr shows compliance with a 99% removal standard for HCl.

3. Limitation on Stack Emissions of Particulate Material. The corrected particulate loading of 140 mg/m^3 is less than the 180 mg/m^3 standard for particulate loading (corrected to a standard excess air level).

13.7 REFERENCES

1. Addendum to Specifications for Incinerator Testing at Federal Facilities, PHS, NCAPC, Dec. 6, 1967.

2. American Society for Testing and Materials, Gaseous Fuels; Coal and Coke; Atmospheric Analysis, Part 26 (pp. 617-622) of Annual Book of ASTM Standards, Philadelphia, Pennsylvania, 1974.

3. Felix, L.G., G.I. Clinard, G.E. Lacey, and J.D. McCain, Inertial Cascade Impactor Substrate Media for Flue Gas Sampling, U.S. Environmental Protection Agency, Research Triangle Park, North Carolina, EPA-600/7-77-060, June 1977.

4. Martin, Robert M., Construction Details of Isokinetic Source-Sampling Equipment, U.S. Environmental Protection Agency, Research Triangle Park, North Carolina, APTD-0581, April 1971.

5. Rom, Jerome, J., Maintenance, Calibration and Operation of Isokinetic Source Sampling Equipment, U.S. Environmental Protection Agency, Research Triangle Park, North Carolina, APTD-0576, March 1972.

6. Shigehara, R.T., Adjustments in the EPA Nomography for Different Pitot Tube Coefficients and Dry Molecular Weights, Stack Sampling News 2:4-11 (October 1974).

7. Smith, W.S., R.T. Shigehara and W.F. Todd, A Method in Interpreting Stack Sampling Data, Paper presented at the 63rd Annual Meeting of the Air Pollution Control Association, St. Louis, Missouri, June 14-19, 1970.

8. Smith, W.S., et al., Stack Gas Sampling Improved and Simplified with New Equipment, APCA Paper No. 67-119, 1967.

9. Specifications for Incinerator Testing at Federal Facilities, PHS NCAPC, 1967.

10. Vollaro, R.F., A Survey of Commercially Available Instrumentation for the Measurement of Low-Range Gas Velocities (unpublished paper), Emission Measurement Branch, U.S. Environmental Protection Agency, Research Triangle Park, North Carolina, November 1976.

APPENDIX

COMPANY REFERENCES

The following listing of frequently-used addresses is provided for the convenience of users of this manual. No endorsement is intended or implied.

Ace Glass Company
1342 N.W. Boulevard
P.O. Box 688
Vineland, NJ 08360
(609) 692-3333

Aldrich Chemical Company
Department T
P.O. Box 355
Milwaukee, WI 53201

Alpha Products
5570 - T W. 70th Place
Chicago, IL 60638
(312) 586-9810

Barneby and Cheney Company
E. 8th Avenue and N. Cassidy Street
P.O. Box 2526
Columbus, OH 43219
(614) 258-9501

Bio - Rad Laboratories
2200 Wright Avenue
Richmond, CA 94804
(415) 234-4130

Burdick & Jackson Lab Inc.
1953 S. Harvey Street
Muskegon, MO 49442

Calgon Corporation
P.O. Box 717
Pittsburgh, PA 15230
(412) 777-8000

Conostan Division
Conoco Speciality Products, Inc.
P.O. Box 1267
Ponca City, OK 74601
(405) 767-3456

Corning Glass Works
Houghton Park
Corning, NY 14830
(315) 974-9000

Dohrmann, Division of Xertex Corporation
3240 - T Scott Boulevard
Santa Clara, CA 95050
(408) 727-6000
(800) 538-7708

E. M. Laboratories, Inc.
500 Executive Boulevard
Elmsford, NY 10523

Fisher Scientific Co.
203 Fisher Building
Pittsburgh, PA 15219
(412) 562-8300

General Electric Corporation
3135 Easton Turnpike
Fairfield, CT 06431
(203) 373-2211

Graham Manufactory Co., Inc.
20 Florence Avenue
Batavia, NY 14020
(716) 343-2216

Hamilton Industries
1316 18th Street
Two Rivers, WI 54241
(414) 793-1121

ICN Life Sciences Group
3300 Hyland Avenue
Costa Mesa, CA 92626

Johns - Manville Corporation
P.O. Box 5108
Denver, CO 80217

Kontes Glass Company
8000 Spruce Street
Vineland, NJ 08360

Millipore Corporation
80 Ashby Road
Bedford, MA 01730
(617) 275-9200
(800) 225-1380

National Bureau of Standards
U.S. Department of Commerce
Washington, DC 20234
(202) 921-1000

Pierce Chemical Company
Box 117
Rockford, IL 61105
(815) 968-0747

Scientific Glass and Instrument, Inc.
7246 - T Wynnwood
P.O. Box 6
Houston, TX 77001
(713) 868-1481

Scientific Products Company
1430 Waukegon Road
McGaw Park, IL 60085
(312) 689-8410

Spex Industries
3880 - T and Park Avenue
Edison, NJ 08820

Waters Associates
34 - T Maple Street
Milford, MA 01757
(617) 478-2000
(800) 252-4752

Whatman Laboratory Products, Inc.
Clifton, NJ 07015
(201) 773-5800

☆ U.S. GOVERNMENT PRINTING OFFICE:1994-381-496