Waste Isolation Pilot Plant

Compliance Certification Application

Reference 234d

EPA (U.S. Environmental Protection Agency). 1986.
Test Methods for Evaluating Solid Waste, Physical/Chemical Methods, SW-846, 3rd ed., Office of Solid Waste and Emergency Response, Washington, D.C. Volume IC.

Submitted in accordance with 40 CFR §194.13, Submission of Reference Materials.

United States
Environmental Protection
Agency

Office of Solid Waste
and Emergency Response
Washington, DC 20460

November 1986
SW-846
Third Edition

Solid Waste

EPA

Test Methods for Evaluating Solid Waste

Volume IC: Laboratory Manual Physical/Chemical Methods

Printed on Recy

VOLUME ONE,

SECTION C

SW-846
Test Methods for Evaluating Solid Waste
Physical/Chemical Methods
Laboratory Manual
Volume IC

Revision 0
Date September 1986

For sale by the Superintendent of Documents, U.S. Government Printing Office Washington, D.C. 20402

DISCLAIMER

Mention of trade names or commercial products does not constitute endorsement or recommendation for use by the U.S. Environmental Protection Agency.

SW-846 methods are designed to be used with equipment from any manufacturer that results in suitable method performance (as assessed by accuracy, precision, detection limits and matrix compatibility). In several SW-846 methods, equipment specifications and settings are given for the specific instrument used during method development, or subsequently approved for use in the method. These references are made to provide the best possible guidance to laboratories using this manual. Equipment not specified in the method may be used as long as the laboratory achieves equivalent or superior method performance. If alternate equipment is used, the laboratory must follow the manufacturer's instructions for their particular instrument.

Since many types and sizes of glassware and supplies are commercially available, and since it is possible to prepare reagents and standards in many different ways, those specified in these methods may be replaced by any similar types as long as this substitution does not affect the overall quality of the analyses.

ABSTRACT

Test Methods for Evaluating Solid Waste, Physical/Chemical Methods (SW-846) provides test procedures and guidance which are recommended for use in conducting the evaluations and measurements needed to comply with the Resource Conservation and Recovery Act (RCRA), Public Law 94-580. These methods are approved by the U.S. Environmental Protection Agency for obtaining data to satisfy the requirements of 40 **CFR** Parts 122 through 270. This manual presents the state-of-the-art in routine analytical testing adapted for the RCRA program. It contains procedures for field and laboratory quality control, sampling, determining hazardous constituents in wastes, determining the hazardous characteristics of wastes (toxicity, ignitability, reactivity, and corrosivity), and for determining physical properties of wastes. It also contains guidance on how to select appropriate methods.

Several of the hazardous waste regulations under Subtitle C of RCRA require that specific testing methods described in SW-846 be employed for certain applications. Refer to 40 *Code of Federal Regulations* (CFR), Parts 260 through 270, for those specific requirements. Any reliable analytical method may be used to meet other requirements under Subtitle C of RCRA.

TABLE OF CONTENTS

VOLUME ONE

SECTION A

DISCLAIMER
ABSTRACT
TABLE OF CONTENTS
METHOD INDEX AND CONVERSION TABLE
PREFACE
ACKNOWLEDGEMENTS

PART I METHODS FOR ANALYTES AND PROPERTIES

CHAPTER ONE -- QUALITY CONTROL

1.0 Introduction
2.0 QA Project Plan
3.0 Field Operations
4.0 Laboratory Operations
5.0 Definitions
6.0 References

CHAPTER TWO -- CHOOSING THE CORRECT PROCEDURE

2.1 Purpose
2.2 Required Information
2.3 Implementing the Guidance
2.4 Characteristics
2.5 Ground Water
2.6 References

CHAPTER THREE -- METALLIC ANALYTES

3.1 Sampling Considerations
3.2 Sample Preparation Methods

Method 3005A: Acid Digestion of Waters for Total Recoverable or Dissolved Metals for Analysis by Flame Atomic Absorption (FLAA) or Inductively Coupled Plasma (ICP) Spectroscopy

Method 3010A: Acid Digestion of Aqueous Samples and Extracts for Total Metals for Analysis by Flame Atomic Absorption (FLAA) or Inductively Coupled Plasma (ICP) Spectroscopy

Method 3015: Microwave Assisted Acid Digestion of Aqueous Samples and Extracts

Method 3020A: Acid Digestion of Aqueous Samples and Extracts for Total Metals for Analysis by Graphite Furnace Atomic Absorption (GFAA) Spectroscopy
Method 3040: Dissolution Procedure for Oils, Greases, or Waxes
Method 3050A: Acid Digestion of Sediments, Sludges, and Soils
Method 3051: Microwave Assisted Acid Digestion of Sediments, Sludges, Soils, and Oils

3.3 Methods for Determination of Metals

Method 6010A: Inductively Coupled Plasma-Atomic Emission Spectroscopy
Method 6020: Inductively Coupled Plasma - Mass Spectrometry
Method 7000A: Atomic Absorption Methods
Method 7020: Aluminum (AA, Direct Aspiration)
Method 7040: Antimony (AA, Direct Aspiration)
Method 7041: Antimony (AA, Furnace Technique)
Method 7060A: Arsenic (AA, Furnace Technique)
Method 7061A: Arsenic (AA, Gaseous Hydride)
Method 7062: Antimony and Arsenic (AA, Borohydride Reduction)
Method 7080A: Barium (AA, Direct Aspiration)
Method 7081: Barium (AA, Furnace Technique)
Method 7090: Beryllium (AA, Direct Aspiration)
Method 7091: Beryllium (AA, Furnace Technique)
Method 7130: Cadmium (AA, Direct Aspiration)
Method 7131A: Cadmium (AA, Furnace Technique)
Method 7140: Calcium (AA, Direct Aspiration)
Method 7190: Chromium (AA, Direct Aspiration)
Method 7191: Chromium (AA, Furnace Technique)
Method 7195: Chromium, Hexavalent (Coprecipitation)
Method 7196A: Chromium, Hexavalent (Colorimetric)
Method 7197: Chromium, Hexavalent (Chelation/Extraction)
Method 7198: Chromium, Hexavalent (Differential Pulse Polarography)
Method 7200: Cobalt (AA, Direct Aspiration)
Method 7201: Cobalt (AA, Furnace Technique)
Method 7210: Copper (AA, Direct Aspiration)
Method 7211: Copper (AA, Furnace Technique)
Method 7380: Iron (AA, Direct Aspiration)
Method 7381: Iron (AA, Furnace Technique)
Method 7420: Lead (AA, Direct Aspiration)
Method 7421: Lead (AA, Furnace Technique)
Method 7430: Lithium (AA, Direct Aspiration)
Method 7450: Magnesium (AA, Direct Aspiration)
Method 7460: Manganese (AA, Direct Aspiration)
Method 7461: Manganese (AA, Furnace Technique)
Method 7470A: Mercury in Liquid Waste (Manual Cold-Vapor Technique)
Method 7471A: Mercury in Solid or Semisolid Waste (Manual Cold-Vapor Technique)
Method 7480: Molybdenum (AA, Direct Aspiration)
Method 7481: Molybdenum (AA, Furnace Technique)
Method 7520: Nickel (AA, Direct Aspiration)
Method 7550: Osmium (AA, Direct Aspiration)
Method 7610: Potassium (AA, Direct Aspiration)
Method 7740: Selenium (AA, Furnace Technique)

Method 7741A: Selenium (AA, Gaseous Hydride)
Method 7742: Selenium (AA, Borohydride Reduction)
Method 7760A: Silver (AA, Direct Aspiration)
Method 7761: Silver (AA, Furnace Technique)
Method 7770: Sodium (AA, Direct Aspiration)
Method 7780: Strontium (AA, Direct Aspiration)
Method 7840: Thallium (AA, Direct Aspiration)
Method 7841: Thallium (AA, Furnace Technique)
Method 7870: Tin (AA, Direct Aspiration)
Method 7910: Vanadium (AA, Direct Aspiration)
Method 7911: Vanadium (AA, Furnace Technique)
Method 7950: Zinc (AA, Direct Aspiration)
Method 7951: Zinc (AA, Furnace Technique)

APPENDIX -- COMPANY REFERENCES

NOTE: A suffix of "A" in the method number indicates revision one (the method has been revised once). A suffix of "B" in the method number indicates revision two (the method has been revised twice). A suffix of "C" in the method number indicates revision three (the method has been revised three times). **In order to properly document the method used for analysis, the entire method number including the suffix letter designation (e.g., A, B, or C) must be identified by the analyst.** A method reference found within the RCRA regulations and the text of SW-846 methods and chapters refers to the latest promulgated revision of the method, even though the method number does not include the appropriate letter suffix.

VOLUME ONE

SECTION B

DISCLAIMER
ABSTRACT
TABLE OF CONTENTS
METHOD INDEX AND CONVERSION TABLE
PREFACE
ACKNOWLEDGEMENTS

CHAPTER ONE, REPRINTED -- QUALITY CONTROL

1.0 Introduction
2.0 QA Project Plan
3.0 Field Operations
4.0 Laboratory Operations
5.0 Definitions
6.0 References

CHAPTER FOUR -- ORGANIC ANALYTES

4.1 Sampling Considerations
4.2 Sample Preparation Methods

4.2.1 Extractions and Preparations

Method 3500A: Organic Extraction and Sample Preparation
Method 3510B: Separatory Funnel Liquid-Liquid Extraction
Method 3520B: Continuous Liquid-Liquid Extraction
Method 3540B: Soxhlet Extraction
Method 3541: Automated Soxhlet Extraction
Method 3550A: Ultrasonic Extraction
Method 3580A: Waste Dilution
Method 5030A: Purge-and-Trap
Method 5040A: Analysis of Sorbent Cartridges from Volatile Organic Sampling Train (VOST): Gas Chromatography/Mass Spectrometry Technique
Method 5041: Protocol for Analysis of Sorbent Cartridges from Volatile Organic Sampling Train (VOST): Wide-bore Capillary Column Technique

4.2.2 Cleanup

Method 3600B: Cleanup
Method 3610A: Alumina Column Cleanup

Method 3611A: Alumina Column Cleanup and Separation of Petroleum Wastes
Method 3620A: Florisil Column Cleanup
Method 3630B: Silica Gel Cleanup
Method 3640A: Gel-Permeation Cleanup
Method 3650A: Acid-Base Partition Cleanup
Method 3660A: Sulfur Cleanup
Method 3665: Sulfuric Acid/Permanganate Cleanup

4.3 Determination of Organic Analytes

4.3.1 Gas Chromatographic Methods

Method 8000A: Gas Chromatography
Method 8010B: Halogenated Volatile Organics by Gas Chromatography
Method 8011: 1,2-Dibromoethane and 1,2-Dibromo-3-chloropropane by Microextraction and Gas Chromatography
Method 8015A: Nonhalogenated Volatile Organics by Gas Chromatography
Method 8020A: Aromatic Volatile Organics by Gas Chromatography
Method 8021A: Halogenated Volatiles by Gas Chromatography Using Photoionization and Electrolytic Conductivity Detectors in Series: Capillary Column Technique
Method 8030A: Acrolein and Acrylonitrile by Gas Chromatography
Method 8031: Acrylonitrile by Gas Chromatography
Method 8032: Acrylamide by Gas Chromatography
Method 8040A: Phenols by Gas Chromatography
Method 8060: Phthalate Esters
Method 8061: Phthalate Esters by Capillary Gas Chromatography with Electron Capture Detection (GC/ECD)
Method 8070: Nitrosamines by Gas Chromatography
Method 8080A: Organochlorine Pesticides and Polychlorinated Biphenyls by Gas Chromatography
Method 8081: Organochlorine Pesticides and PCBs as Aroclors by Gas Chromatography: Capillary Column Technique
Method 8090: Nitroaromatics and Cyclic Ketones
Method 8100: Polynuclear Aromatic Hydrocarbons
Method 8110: Haloethers by Gas Chromatography
Method 8120A: Chlorinated Hydrocarbons by Gas Chromatography
Method 8121: Chlorinated Hydrocarbons by Gas Chromatography: Capillary Column Technique
Method 8140: Organophosphorus Pesticides
Method 8141A: Organophosphorus Compounds by Gas Chromatography: Capillary Column Technique
Method 8150B: Chlorinated Herbicides by Gas Chromatography
Method 8151: Chlorinated Herbicides by GC Using Methylation or Pentafluorobenzylation Derivatization: Capillary Column Technique

4.3.2 Gas Chromatographic/Mass Spectroscopic Methods

Method 8240B: Volatile Organic Compounds by Gas Chromatography/Mass Spectrometry (GC/MS)
Method 8250A: Semivolatile Organic Compounds by Gas Chromatography/Mass Spectrometry (GC/MS)
Method 8260A: Volatile Organic Compounds by Gas Chromatography/Mass Spectrometry (GC/MS): Capillary Column Technique
Method 8270B: Semivolatile Organic Compounds by Gas Chromatography/Mass Spectrometry (GC/MS): Capillary Column Technique
Method 8280: The Analysis of Polychlorinated Dibenzo-p-Dioxins and Polychlorinated Dibenzofurans
Appendix A: Signal-to-Noise Determination Methods
Appendix B: Recommended Safety and Handling Procedures for PCDDs/PCDFs
Method 8290: Polychlorinated Dibenzodioxins (PCDDs) and Polychlorinated Dibenzofurans (PCDFs) by High-Resolution Gas Chromatography/High-Resolution Mass Spectrometry (HRGC/HRMS)
Attachment A: Procedures for the Collection, Handling, Analysis, and Reporting of Wipe Tests Performed within the Laboratory

4.3.3 High Performance Liquid Chromatographic Methods

Method 8310: Polynuclear Aromatic Hydrocarbons
Method 8315: Determination of Carbonyl Compounds by High Performance Liquid Chromatography (HPLC)
Appendix A: Recrystallization of 2,4-Dinitrophenylhydrazine (DNPH)
Method 8316: Acrylamide, Acrylonitrile and Acrolein by High Performance Liquid Chromatography (HPLC)
Method 8318: N-Methylcarbamates by High Performance Liquid Chromatography (HPLC)
Method 8321: Solvent Extractable Non-Volatile Compounds by High Performance Liquid Chromatography/Thermospray/Mass Spectrometry (HPLC/TSP/MS) or Ultraviolet (UV) Detection
Method 8330: Nitroaromatics and Nitramines by High Performance Liquid Chromatography (HPLC)
Method 8331: Tetrazene by Reverse Phase High Performance Liquid Chromatography (HPLC)

4.3.4 Fourier Transform Infrared Methods

Method 8410: Gas Chromatography/Fourier Transform Infrared (GC/FT-IR) Spectrometry for Semivolatile Organics: Capillary Column

4.4 Miscellaneous Screening Methods

Method 3810:	Headspace
Method 3820:	Hexadecane Extraction and Screening of Purgeable Organics
Method 4010:	Screening for Pentachlorophenol by Immunoassay
Method 8275:	Thermal Chromatography/Mass Spectrometry (TC/MS) for Screening Semivolatile Organic Compounds

APPENDIX -- COMPANY REFERENCES

NOTE: A suffix of "A" in the method number indicates revision one (the method has been revised once). A suffix of "B" in the method number indicates revision two (the method has been revised twice). A suffix of "C" in the method number indicates revision three (the method has been revised three times). **In order to properly document the method used for analysis, the entire method number including the suffix letter designation (e.g., A, B, or C) must be identified by the analyst.** A method reference found within the RCRA regulations and the text of SW-846 methods and chapters refers to the latest promulgated revision of the method, even though the method number does not include the appropriate letter suffix.

VOLUME ONE

SECTION C

DISCLAIMER
ABSTRACT
TABLE OF CONTENTS
METHOD INDEX AND CONVERSION TABLE
PREFACE

CHAPTER ONE, REPRINTED -- QUALITY CONTROL

1.0 Introduction
2.0 QA Project Plan
3.0 Field Operations
4.0 Laboratory Operations
5.0 Definitions
6.0 References

CHAPTER FIVE -- MISCELLANEOUS TEST METHODS

Method 5050: Bomb Preparation Method for Solid Waste
Method 9010A: Total and Amenable Cyanide (Colorimetric, Manual)
Method 9012: Total and Amenable Cyanide (Colorimetric, Automated UV)
Method 9013: Cyanide Extraction Procedure for Solids and Oils
Method 9020B: Total Organic Halides (TOX)
Method 9021: Purgeable Organic Halides (POX)
Method 9022: Total Organic Halides (TOX) by Neutron Activation Analysis
Method 9030A: Acid-Soluble and Acid-Insoluble Sulfides
Method 9031: Extractable Sulfides
Method 9035: Sulfate (Colorimetric, Automated, Chloranilate)
Method 9036: Sulfate (Colorimetric, Automated, Methylthymol Blue, AA II)
Method 9038: Sulfate (Turbidimetric)
Method 9056: Determination of Inorganic Anions by Ion Chromatography
Method 9060: Total Organic Carbon
Method 9065: Phenolics (Spectrophotometric, Manual 4-AAP with Distillation)
Method 9066: Phenolics (Colorimetric, Automated 4-AAP with Distillation)
Method 9067: Phenolics (Spectrophotometric, MBTH with Distillation)
Method 9070: Total Recoverable Oil & Grease (Gravimetric, Separatory Funnel Extraction)
Method 9071A: Oil and Grease Extraction Method for Sludge and Sediment Samples
Method 9075: Test Method for Total Chlorine in New and Used Petroleum Products by X-Ray Fluorescence Spectrometry (XRF)
Method 9076: Test Method for Total Chlorine in New and Used Petroleum Products by Oxidative Combustion and Microcoulometry

Method 9077: Test Methods for Total Chlorine in New and Used Petroleum Products (Field Test Kit Methods)
Method A: Fixed End Point Test Kit Method
Method B: Reverse Titration Quantitative End Point Test Kit Method
Method C: Direct Titration Quantitative End Point Test Kit Method
Method 9131: Total Coliform: Multiple Tube Fermentation Technique
Method 9132: Total Coliform: Membrane Filter Technique
Method 9200: Nitrate
Method 9250: Chloride (Colorimetric, Automated Ferricyanide AAI)
Method 9251: Chloride (Colorimetric, Automated Ferricyanide AAII)
Method 9252A: Chloride (Titrimetric, Mercuric Nitrate)
Method 9253: Chloride (Titrimetric, Silver Nitrate)
Method 9320: Radium-228

CHAPTER SIX -- PROPERTIES

Method 1312: Synthetic Precipitation Leaching Procedure
Method 1320: Multiple Extraction Procedure
Method 1330A: Extraction Procedure for Oily Wastes
Method 9040B: pH Electrometric Measurement
Method 9041A: pH Paper Method
Method 9045C: Soil and Waste pH
Method 9050: Specific Conductance
Method 9080: Cation-Exchange Capacity of Soils (Ammonium Acetate)
Method 9081: Cation-Exchange Capacity of Soils (Sodium Acetate)
Method 9090A: Compatibility Test for Wastes and Membrane Liners
Method 9095: Paint Filter Liquids Test
Method 9096: Liquid Release Test (LRT) Procedure
Appendix A: Liquid Release Test Pre-Test
Method 9100: Saturated Hydraulic Conductivity, Saturated Leachate Conductivity, and Intrinsic Permeability
Method 9310: Gross Alpha and Gross Beta
Method 9315: Alpha-Emitting Radium Isotopes

PART II CHARACTERISTICS

CHAPTER SEVEN -- INTRODUCTION AND REGULATORY DEFINITIONS

7.1 Ignitability
7.2 Corrosivity
7.3 Reactivity

Test Method to Determine Hydrogen Cyanide Released from Wastes
Test Method to Determine Hydrogen Sulfide Released from Wastes

7.4 Toxicity Characteristic Leaching Procedure

CHAPTER EIGHT -- METHODS FOR DETERMINING CHARACTERISTICS

8.1 Ignitability

Method 1010: Pensky-Martens Closed-Cup Method for Determining Ignitability

Method 1020A: Setaflash Closed-Cup Method for Determining Ignitability

8.2 Corrosivity

Method 1110: Corrosivity Toward Steel

8.3 Reactivity

8.4 Toxicity

Method 1310A: Extraction Procedure (EP) Toxicity Test Method and Structural Integrity Test

Method 1311: Toxicity Characteristic Leaching Procedure

APPENDIX -- COMPANY REFERENCES

NOTE: A suffix of "A" in the method number indicates revision one (the method has been revised once). A suffix of "B" in the method number indicates revision two (the method has been revised twice). A suffix of "C" in the method number indicates revision three (the method has been revised three times). **In order to properly document the method used for analysis, the entire method number including the suffix letter designation (e.g., A, B, or C) must be identified by the analyst.** A method reference found within the RCRA regulations and the text of SW-846 methods and chapters refers to the latest promulgated revision of the method, even though the method number does not include the appropriate letter suffix.

VOLUME TWO

DISCLAIMER
ABSTRACT
TABLE OF CONTENTS
METHOD INDEX AND CONVERSION TABLE
PREFACE

CHAPTER ONE, REPRINTED -- QUALITY CONTROL

1.0 Introduction
2.0 QA Project Plan
3.0 Field Operations
4.0 Laboratory Operations
5.0 Definitions
6.0 References

PART III SAMPLING

CHAPTER NINE -- SAMPLING PLAN

9.1 Design and Development
9.2 Implementation

CHAPTER TEN -- SAMPLING METHODS

Method 0010: Modified Method 5 Sampling Train
Appendix A: Preparation of XAD-2 Sorbent Resin
Appendix B: Total Chromatographable Organic Material Analysis
Method 0020: Source Assessment Sampling System (SASS)
Method 0030: Volatile Organic Sampling Train

PART IV MONITORING

CHAPTER ELEVEN -- GROUND WATER MONITORING

11.1 Background and Objectives
11.2 Relationship to the Regulations and to Other Documents
11.3 Revisions and Additions
11.4 Acceptable Designs and Practices
11.5 Unacceptable Designs and Practices

CHAPTER TWELVE -- LAND TREATMENT MONITORING

12.1 Background
12.2 Treatment Zone
12.3 Regulatory Definition

12.4 Monitoring and Sampling Strategy
12.5 Analysis
12.6 References and Bibliography

CHAPTER THIRTEEN - INCINERATION

13.1 Introduction
13.2 Regulatory Definition
13.3 Waste Characterization Strategy
13.4 Stack-Gas Effluent Characterization Strategy
13.5 Additional Effluent Characterization Strategy
13.6 Selection of Specific Sampling and Analysis Methods
13.7 References

APPENDIX -- COMPANY REFERENCES

NOTE: A suffix of "A" in the method number indicates revision one (the method has been revised once). A suffix of "B" in the method number indicates revision two (the method has been revised twice). A suffix of "C" in the method number indicates revision three (the method has been revised three times). **In order to properly document the method used for analysis, the entire method number including the suffix letter designation (e.g., A, B, or C) must be identified by the analyst.** A method reference found within the RCRA regulations and the text of SW-846 methods and chapters refers to the latest promulgated revision of the method, even though the method number does not include the appropriate letter suffix.

METHOD INDEX AND CONVERSION TABLE

Method Number, Third Edition	Chapter Number, Third Edition	Method Number, Second Edition	Current Revision Number
0010	Ten	0010	0
0020	Ten	0020	0
0030	Ten	0030	0
1010	Eight (8.1)	1010	0
1020	Eight (8.1)	1020	0
1110	Eight (8.2)	1110	0
1310	Eight (8.4)	1310	0
1320	Six	1320	0
1330	Six	1330	0
3005	Three	3005	0
3010	Three	3010	0
3020	Three	3020	0
3040	Three	3040	0
3050	Three	3050	0
3500	Four (4.2.1)	None (new method)	0
3510	Four (4.2.1)	3510	0
3520	Four (4.2.1)	3520	0
3540	Four (4.2.1)	3540	0
3550	Four (4.2.1)	3550	0
3580	Four (4.2.1)	None (new method)	0
3600	Four (4.2.2)	None (new method)	0
3610	Four (4.2.2)	None (new method)	0
3611	Four (4.2.2)	3570	0
3620	Four (4.2.2)	None (new method)	0
3630	Four (4.2.2)	None (new method)	0
3640	Four (4.2.2)	None (new method)	0
3650	Four (4.2.2)	None (new method)	0
3660	Four (4.2.2)	None (new method)	0
3810	Four (4.4)	5020	0
3820	Four (4.4)	None (new method)	0
5030	Four (4.2.1)	5030	0
5040	Four (4.2.1)	3720	0
6010	Three	6010	0
7000	Three	7000	0
7020	Three	7020	0

METHOD INDEX AND CONVERSION TABLE
(Continued)

Method Number, Third Edition	Chapter Number, Third Edition	Method Number, Second Edition	Current Revision Number
7040	Three	7040	0
7041	Three	7041	0
7060	Three	7060	0
7061	Three	7061	0
7080	Three	7080	0
7090	Three	7090	0
7091	Three	7091	0
7130	Three	7130	0
7131	Three	7131	0
7140	Three	7140	0
7190	Three	7190	0
7191	Three	7191	0
7195	Three	7195	0
7196	Three	7196	0
7197	Three	7197	0
7198	Three	7198	0
7200	Three	7200	0
7201	Three	7201	0
7210	Three	7210	0
7380	Three	7380	0
7420	Three	7420	0
7421	Three	7421	0
7450	Three	7450	0
7460	Three	7460	0
7470	Three	7470	0
7471	Three	7471	0
7480	Three	7480	0
7481	Three	7481	0
7520	Three	7520	0
7550	Three	7550	0
7610	Three	7610	0
7740	Three	7740	0
7741	Three	7741	0
7760	Three	7760	0
7770	Three	7770	0

METHOD INDEX AND CONVERSION TABLE
(Continued)

Method Number, Third Edition	Chapter Number, Third Edition	Method Number, Second Edition	Current Revision Number
7840	Three	7840	0
7841	Three	7841	0
7870	Three	7870	0
7910	Three	7910	0
7911	Three	7911	0
7950	Three	7950	0
8000	Four (4.3.1)	None (new method)	0
8010	Four (4.3.1)	8010	0
8015	Four (4.3.1)	8015	0
8020	Four (4.3.1)	8020	0
8030	Four (4.3.1)	8030	0
8040	Four (4.3.1)	8040	0
8060	Four (4.3.1)	8060	0
8080	Four (4.3.1)	8080	0
8090	Four (4.3.1)	8090	0
8100	Four (4.3.1)	8100	0
8120	Four (4.3.1)	8120	0
8140	Four (4.3.1)	8140	0
8150	Four (4.3.1)	8150	0
8240	Four (4.3.2)	8240	0
8250	Four (4.3.2)	8250	0
8270	Four (4.3.2)	8270	0
8280	Four (4.3.2)	None (new method)	0
8310	Four (4.3.3)	8310	0
9010	Five	9010	0
9020	Five	9020	0
9022	Five	9022	0
9030	Five	9030	0
9035	Five	9035	0
9036	Five	9036	0
9038	Five	9038	0
9040	Six	9040	0
9041	Six	9041	0
9045	Six	9045	0
9050	Six	9050	0

METHOD INDEX AND CONVERSION TABLE
(Continued)

Method Number, Third Edition	Chapter Number, Third Edition	Method Number, Second Edition	Current Revision Number
9060	Five	9060	0
9065	Five	9065	0
9066	Five	9066	0
9067	Five	9067	0
9070	Five	9070	0
9071	Five	9071	0
9080	Six	9080	0
9081	Six	9081	0
9090	Six	9090	0
9095	Six	9095	0
9100	Six	9100	0
9131	Five	9131	0
9132	Five	9132	0
9200	Five	9200	0
9250	Five	9250	0
9251	Five	9251	0
9252	Five	9252	0
9310	Six	9310	0
9315	Six	9315	0
9320	Five	9320	0
HCN Test Method	Seven	HCN Test Method	0
H_2S Test Method	Seven	H_2S Test Method	0

PREFACE AND OVERVIEW

PURPOSE OF THE MANUAL

Test Methods for Evaluating Solid Waste (SW-846) is intended to provide a unified, up-to-date source of information on sampling and analysis related to compliance with RCRA regulations. It brings together into one reference all sampling and testing methodology approved by the Office of Solid Waste for use in implementing the RCRA regulatory program. The manual provides methodology for collecting and testing representative samples of waste and other materials to be monitored. Aspects of sampling and testing covered in SW-846 include quality control, sampling plan development and implementation, analysis of inorganic and organic constituents, the estimation of intrinsic physical properties, and the appraisal of waste characteristics.

The procedures described in this manual are meant to be comprehensive and detailed, coupled with the realization that the problems encountered in sampling and analytical situations require a certain amount of flexibility. The solutions to these problems will depend, in part, on the skill, training, and experience of the analyst. For some situations, it is possible to use this manual in rote fashion. In other situations, it will require a combination of technical abilities, using the manual as guidance rather than in a step-by-step, word-by-word fashion. Although this puts an extra burden on the user, it is unavoidable because of the variety of sampling and analytical conditions found with hazardous wastes.

ORGANIZATION AND FORMAT

This manual is divided into two volumes. Volume I focuses on laboratory activities and is divided for convenience into three sections. Volume IA deals with quality control, selection of appropriate test methods, and analytical methods for metallic species. Volume IB consists of methods for organic analytes. Volume IC includes a variety of test methods for miscellaneous analytes and properties for use in evaluating the waste characteristics. Volume II deals with sample acquisition and includes quality control, sampling plan design and implementation, and field sampling methods. Included for the convenience of sampling personnel are discusssions of the ground water, land treatment, and incineration monitoring regulations.

Volume I begins with an overview of the quality control precedures to be imposed upon the sampling and analytical methods. The quality control chapter (Chapter One) and the methods chapters are interdependent. The analytical procedures cannot be used without a thorough understanding of the quality control requirements and the means to implement them. This understanding can be achieved only be reviewing Chapter One and the analytical methods together. It is expected that individual laboratories, using SW-846 as the reference

source, will select appropriate methods and develop a standard operating procedure (SOP) to be followed by the laboratory. The SOP should incorporate the pertinent information from this manual adopted to the specific needs and circumstances of the individual laboratory as well as to the materials to be evaluated.

The method selection chapter (Chapter Two) presents a comprehensive discussion of the application of these methods to various matrices in the determination of groups of analytes or specific analytes. It aids the chemist in constructing the correct analytical method from the array of procedures which may cover the matrix/analyte/concentration combination of interests. The section discusses the objective of the testing program and its relationship to the choice of an analytical method. Flow charts are presented along with tables to guide in the selection of the correct analytical procedures to form the appropriate method.

The analytical methods are separated into distinct procedures describing specific, independent analytical operations. These include extraction, digestion, cleanup, and determination. This format allows linking of the various steps in the analysis according to: the type of sample (e.g., water, soil, sludge, still bottom); analytes(s) of interest; needed sensitivity; and available analytical instrumentation. The chapters describing Miscellaneous Test Methods and Properties, however, give complete methods which are not amenable to such segmentation to form discrete procedures.

The introductory material at the beginning of each section containing analytical procedures presents information on sample handling and preservation, safety, and sample preparation.

Part II of Volume I (Chapters Seven and Eight) describes the characteristics of a waste. Sections following the regulatory descriptions contain the methods used to determine if the waste is hazardous because it exhibits a particular characteristic.

Volume II gives background information on statistical and nonstatistical aspects of sampling. It also presents practical sampling techniques appropriate for situations presenting a variety of physical conditions.

A discussion of the regulatory requirements with respect to several monitoring categories is also given in this volume. These include ground water monitoring, land treatment, and incineration. The purpose of this guidance is to orient the user to the objective of the analysis, and to assist in developing data quality objectives, sampling plans, and laboratory SOP's.

Significant interferences, or other problems, may be encountered with certain samples. In these situations, the analyst is advised to contact the Chief, Methods Section (WH-562B) Technical Assessment Branch, Office of Solid Waste, US EPA, Washington, DC 20460 (202-382-4761) for assistance. The manual is intended to serve all those with a need to evaluate solid waste. Your comments, corrections, suggestions, and questions concerning any material contained in, or omitted from, this manual will be gratefully appreciated. Please direct your comments to the above address.

ACKNOWLEDGEMENTS

The Office of Solid Waste thanks the following individuals and groups for their efforts, assistance and advice in the preparation of this manual:

Dr. William Loy, Chemist, Analytical Support Branch, EPA Region IV;

Mr. Theodore Martin, Research Chemist, EMSL-CI;

Dr. Nancy Rothman, Assistant Director, ERCO/A Division of ENSECO;

Ms. Ann Soule, Technical Editor, ERCO/A Division of ENSECO;

Ms. Dorothy Bell, Technical Editor, ERCO/A Division of ENSECO;

Ms. Margaret Layne, Technical Program Manager, Research Triangle Institute;

Mr. Alvia Gaskill, Senior Environmental Scientist, Research Triangle Institute;

Mr. Ronald Ramsey, Technical Program Manager, Dynamac Corp.;

Mr. Gene E. Fax, Managing Director, The Cadmus Group, Inc.;

Mr. Robert Hirsch, New Jersey Department of Environmental Protection;

Mr. Henry Hoffman, New Jersey Department of Environmental Protection;

Mr. David Bennett, Hazardous Substance Branch, EPA;

The EPA SW-846 Work Group.

CHAPTER ONE
TABLE OF CONTENTS

Section		Page
1.0	INTRODUCTION	1
2.0	QA PROJECT PLAN	1
2.1	DATA QUALITY OBJECTIVES	2
2.2	PROJECT OBJECTIVES	2
2.3	SAMPLE COLLECTION	3
2.4	ANALYSIS AND TESTING	3
2.5	QUALITY CONTROL	3
2.6	PROJECT DOCUMENTATION	3
2.7	ORGANIZATION PERFORMING FIELD OR LABORATORY OPERATIONS	4
2.7.1	Performance Evaluation	5
2.7.2	Internal Assessment by QA Function	5
2.7.3	External Assessment	5
2.7.4	On-Site Evaluation	5
2.7.4.1	Field Activities	5
2.7.4.2	Laboratory Activities	6
2.7.5	QA Reports	7
3.0	FIELD OPERATIONS	8
3.1	FIELD LOGISTICS	8
3.2	EQUIPMENT/INSTRUMENTATION	9
3.3	OPERATING PROCEDURES	9
3.3.1	Sample Management	9
3.3.2	Reagent/Standard Preparation	9
3.3.3	Decontamination	9
3.3.4	Sample Collection	10
3.3.5	Field Measurements	10
3.3.6	Equipment Calibration And Maintenance	10
3.3.7	Corrective Action	10
3.3.8	Data Reduction and Validation	11
3.3.9	Reporting	11
3.3.10	Records Management	11
3.3.11	Waste Disposal	11
3.4	FIELD QA AND QC REQUIREMENTS	11
3.4.1	Control Samples	11
3.4.2	Acceptance Criteria	12
3.4.3	Deviations	12
3.4.4	Corrective Action	12
3.4.5	Data Handling	12
3.5	QUALITY ASSURANCE REVIEW	13
3.6	FIELD RECORDS	13

TABLE OF CONTENTS
(continued)

Section	Page
4.0 LABORATORY OPERATIONS	14
4.1 FACILITIES	14
4.2 EQUIPMENT/INSTRUMENTATION	15
4.3 OPERATING PROCEDURES	15
4.3.1 Sample Management	16
4.3.2 Reagent/Standard Preparation	16
4.3.3 General Laboratory Techniques	16
4.3.4 Test Methods	16
4.3.5 Equipment Calibration and Maintenance	17
4.3.6 QC	17
4.3.7 Corrective Action	17
4.3.8 Data Reduction and Validation	18
4.3.9 Reporting	18
4.3.10 Records Management	18
4.3.11 Waste Disposal	18
4.4 LABORATORY QA AND QC PROCEDURES	18
4.4.1 Method Proficiency	18
4.4.2 Control Limits	19
4.4.3 Laboratory Control Procedures	19
4.4.4 Deviations	20
4.4.5 Corrective Action	20
4.4.6 Data Handling	20
4.5 QUALITY ASSURANCE REVIEW	21
4.6 LABORATORY RECORDS	21
5.0 DEFINITIONS	23
6.0 REFERENCES	29
INDEX	30

PART I METHODS FOR ANALYTES AND PROPERTIES

Revision 0
Date September 1986

CHAPTER ONE
QUALITY CONTROL

1.0 INTRODUCTION

It is the goal of the U.S. Environmental Protection Agency's (EPA's) quality assurance (QA) program to ensure that all data be scientifically valid, defensible, and of known precision and accuracy. The data should be of sufficient known quality to withstand scientific and legal challenge relative to the use for which the data are obtained. The QA program is management's tool for achieving this goal.

For RCRA analyses, the recommended minimum requirements for a QA program and the associated quality control (QC) procedures are provided in this chapter.

The data acquired from QC procedures are used to estimate the quality of analytical data, to determine the need for corrective action in response to identified deficiencies, and to interpret results after corrective action procedures are implemented. Method-specific QC procedures are incorporated in the individual methods since they are not applied universally.

A total program to generate data of acceptable quality should include both a QA component, which encompasses the management procedures and controls, as well as an operational day-to-day QC component. This chapter defines fundamental elements of such a data collection program. Data collection efforts involve:

1. design of a project plan to achieve the data quality objectives (DQOs);

2. implementation of the project plan; and

3. assessment of the data to determine if the DQOs are met.

The project plan may be a sampling and analysis plan or a waste analysis plan if it covers the QA/QC goals of the Chapter, or it may be a Quality Assurance Project Plan as described later in this chapter.

This chapter identifies the minimal QC components that should be used in the performance of sampling and analyses, including the QC information which should be documented. Guidance is provided to construct QA programs for field and laboratory work conducted in support of the RCRA program.

2.0 QA PROJECT PLAN

It is recommended that all projects which generate environment-related data in support of RCRA have a QA Project Plan (QAPjP) or equivalent. In some instances, a sampling and analysis plan or a waste analysis plan may be equivalent if it covers all of the QA/QC goals outlined in this chapter. In addition, a separate QAPjP need not be prepared for routine analyses or activities where the procedures to be followed are described in a Standard

Operating Procedures manual or similar document and include the elements of a QAPjP. These documents should be available and referenced in the documentation and/or records for the analysis activities. The term "QAPjP" in this chapter refers to any of these QA/QC documents.

The QAPjP should detail the QA/QC goals and protocols for a specific data collection activity. The QAPjP sets forth a plan for sampling and analysis activities that will generate data of a quality commensurate with their intended use. QAPjP elements should include a description of the project and its objectives; a statement of the DQOs of the project; identification of those involved in the data collection and their responsibilities and authorities; reference to (or inclusion of) the specific sample collection and analysis procedures that will be followed for all aspects of the project; enumeration of QC procedures to be followed; and descriptions of all project documentation. Additional elements should be included in the QAPjP if needed to address all quality related aspects of the data collection project. Elements should be omitted only when they are inappropriate for the project or when absence of those elements will not affect the quality of data obtained for the project (see reference 1).

The role and importance of DQOs and project documentation are discussed below in Sections 2.1 through 2.6. Management and organization play a critical role in determining the effectiveness of a QA/QC program and ensuring that all required procedures are followed. Section 2.7 discusses the elements of an organization's QA program that have been found to ensure an effective program. Field operations and laboratory operations (along with applicable QC procedures) are discussed in Sections 3 and 4, respectively.

2.1 DATA QUALITY OBJECTIVES

Data quality objectives (DQOs) for the data collection activity describe the overall level of uncertainty that a decision-maker is willing to accept in results derived from environmental data. This uncertainty is used to specify the quality of the measurement data required, usually in terms of objectives for precision, bias, representativeness, comparability and completeness. The DQOs should be defined prior to the initiation of the field and laboratory work. The field and laboratory organizations performing the work should be aware of the DQOs so that their personnel may make informed decisions during the course of the project to attain those DQOs. More detailed information on DQOs is available from the U.S. EPA Quality Assurance Management Staff (QAMS) (see references 2 and 4).

2.2 PROJECT OBJECTIVES

A statement of the project objectives and how the objectives are to be attained should be concisely stated and sufficiently detailed to permit clear understanding by all parties involved in the data collection effort. This includes a statement of what problem is to be solved and the information required

in the process. It also includes appropriate statements of the DQOs (i.e., the acceptable level of uncertainty in the information).

2.3 SAMPLE COLLECTION

Sampling procedures, locations, equipment, and sample preservation and handling requirements should be specified in the QAPjP. Further details on quality assurance procedures for field operations are described in Section 3 of this chapter. The OSW is developing policies and procedures for sampling in a planned revision of Chapter Nine of this manual. Specific procedures for groundwater sampling are provided in Chapter Eleven of this manual.

2.4 ANALYSIS AND TESTING

Analytes and properties of concern, analytical and testing procedures to be employed, required detection limits, and requirements for precision and bias should be specified. All applicable regulatory requirements and the project DQOs should be considered when developing the specifications. Further details on the procedures for analytical operations are described in Section 4 of this chapter.

2.5 QUALITY CONTROL

The quality assurance program should address both field and laboratory activities. Quality control procedures should be specified for estimating the precision and bias of the data. Recommended minimum requirements for QC samples have been established by EPA and should be met in order to satisfy recommended minimum criteria for acceptable data quality. Further details on procedures for field and laboratory operations are described in Sections 3 and 4, respectively, of this chapter.

2.6 PROJECT DOCUMENTATION

Documents should be prepared and maintained in conjunction with the data collection effort. Project documentation should be sufficient to allow review of all aspects of the work being performed. The QAPjP discussed in Sections 3 and 4 is one important document that should be maintained.

The length of storage time for project records should comply with regulatory requirements, organizational policy, or project requirements, whichever is more stringent. It is recommended that documentation be stored for three years from submission of the project final report.

Documentation should be secured in a facility that adequately addresses/minimizes its deterioration for the length of time that it is to be retained. A system allowing for the expedient retrieval of information should exist.

Access to archived information should be controlled to maintain the integrity of the data. Procedures should be developed to identify those individuals with access to the data.

2.7 ORGANIZATION PERFORMING FIELD OR LABORATORY OPERATIONS

Proper design and structure of the organization facilitates effective and efficient transfer of information and helps to prevent important procedures from being overlooked.

The organizational structure, functional responsibilities, levels of authority, job descriptions, and lines of communication for all project activities should be established and documented. One person may cover more than one organizational function. Each project participant should have a clear understanding of his or her duties and responsibilities and the relationship of those responsibilities to the overall data collection effort.

The management of each organization participating in a project involving data collection activities should establish that organization's operational and QA policies. This information should be documented in the QAPjP. The management should ensure that (1) the appropriate methodologies are followed as documented in the QAPjPs; (2) personnel clearly understand their duties and responsibilities; (3) each staff member has access to appropriate project documents; (4) any deviations from the QAPjP are communicated to the project management and documented; and (5) communication occurs between the field, laboratory, and project management, as specified in the QAPjP. In addition, each organization should ensure that their activities do not increase the risk to humans or the environment at or about the project location. Certain projects may require specific policies or a Health and Safety Plan to provide this assurance.

The management of the participating field or laboratory organization should establish personnel qualifications and training requirements for the project. Each person participating in the project should have the education, training, technical knowledge, and experience, or a combination thereof, to enable that individual to perform assigned functions. Training should be provided for each staff member as necessary to perform their functions properly. Personnel qualifications should be documented in terms of education, experience, and training, and periodically reviewed to ensure adequacy to current responsibilities.

Each participating field organization or laboratory organization should have a designated QA function (i.e., a team or individual trained in QA) to monitor operations to ensure that the equipment, personnel, activities, procedures, and documentation conform with the QAPjP. To the extent possible, the QA monitoring function should be entirely separate from, and independent of, personnel engaged in the work being monitored. The QA function should be responsible for the QA review.

2.7.1 Performance Evaluation

Performance evaluation studies are used to measure the performance of the laboratory on unknown samples. Performance evaluation samples are typically submitted to the laboratory as blind samples by an independent outside source. The results are compared to predetermined acceptance limits. Performance evaluation samples can also be submitted to the laboratory as part of the QA function during internal assessment of laboratory performance. Records of all performance evaluation studies should be maintained by the laboratory. Problems identified through participation in performance evaluation studies should be immediately investigated and corrected.

2.7.2 Internal Assessment by QA Function

Personnel performing field and laboratory activities are responsible for continually monitoring individual compliance with the QAPjP. The QA function should review procedures, results and calculations to determine compliance with the QAPjP. The results of this internal assessment should be reported to management with requirements for a plan to correct observed deficiencies.

2.7.3 External Assessment

The field and laboratory activities may be reviewed by personnel external to the organization. Such an assessment is an extremely valuable method for identifying overlooked problems. The results of the external assessment should be submitted to management with requirements for a plan to correct observed deficiencies.

2.7.4 On-Site Evaluation

On-site evaluations may be conducted as part of both internal and external assessments. The focus of an on-site evaluation is to evaluate the degree of conformance of project activities with the applicable QAPjP. On-site evaluations may include, but are not limited to, a complete review of facilities, staff, training, instrumentation, procedures, methods, sample collection, analyses, QA policies and procedures related to the generation of environmental data. Records of each evaluation should include the date of the evaluation, location, the areas reviewed, the person performing the evaluation, findings and problems, and actions recommended and taken to resolve problems. Any problems identified that are likely to affect data integrity should be brought immediately to the attention of management.

2.7.4.1 Field Activities

The review of field activities should be conducted by one or more persons knowledgeable in the activities being reviewed and include evaluating, at a minimum, the following subjects:

Completeness of Field Reports -- This review determines whether all requirements for field activities in the QAPjP have been fulfilled, that complete records exist for each field activity, and that the procedures

specified in the QAPjP have been implemented. Emphasis on field documentation will help assure sample integrity and sufficient technical information to recreate each field event. The results of this completeness check should be documented, and environmental data affected by incomplete records should be identified.

Identification of Valid Samples -- This review involves interpretation and evaluation of the field records to detect problems affecting the representativeness of environmental samples. Examples of items that might indicate potentially invalid samples include improper well development, improperly screened wells, instability of pH or conductivity, and collection of volatiles near internal combustion engines. The field records should be evaluated against the QAPjP and SOPs. The reviewer should document the sample validity and identify the environmental data associated with any poor or incorrect field work.

Correlation of Field Test Data -- This review involves comparing any available results of field measurements obtained by more than one method. For example, surface geophysical methods should correlate with direct methods of site geologic characterization such as lithologic logs constructed during drilling operations.

Identification of Anomalous Field Test Data -- This review identifies any anomalous field test data. For example, a water temperature for one well that is 5 degrees higher than any other well temperature in the same aquifer should be noted. The reviewer should evaluate the impact of anomalous field measurement results on the associated environmental data.

Validation of Field Analyses -- This review validates and documents all data from field analysis that are generated *in situ* or from a mobile laboratory as specified in Section 2.7.4.2. The reviewer should document whether the QC checks meet the acceptance criteria, and whether corrective actions were taken for any analysis performed when acceptance criteria were exceeded.

2.7.4.2 Laboratory Activities

The review of laboratory data should be conducted by one or more persons knowledgeable in laboratory activities and include evaluating, at a minimum, the following subjects:

Completeness of Laboratory Records -- This review determines whether: (1) all samples and analyses required by the QAPjP have been processed, (2) complete records exist for each analysis and the associated QC samples, and that (3) the procedures specified in the QAPjP have been implemented. The results of the completeness check should be documented, and environmental data affected by incomplete records should be identified.

Evaluation of Data with Respect to Detection and Quantitation Limits -- This review compares analytical results to required quantitation limits. Reviewers should document instances where detection or quantitation limits

exceed regulatory limits, action levels, or target concentrations specified in the QAPjP.

Evaluation of Data with Respect to Control Limits -- This review compares the results of QC and calibration check samples to control criteria. Corrective action should be implemented for data not within control limits. The reviewer should check that corrective action reports, and the results of reanalysis, are available. The review should determine whether samples associated with out-of-control QC data are identified in a written record of the data review, and whether an assessment of the utility of such analytical results is recorded.

Review of Holding Time Data -- This review compares sample holding times to those required by the QAPjP, and notes all deviations.

Review of Performance Evaluation (PE) Results -- PE study results can be helpful in evaluating the impact of out-of-control conditions. This review documents any recurring trends or problems evident in PE studies and evaluates their effect on environmental data.

Correlation of Laboratory Data -- This review determines whether the results of data obtained from related laboratory tests, e.g., Purgeable Organic Halides (POX) and Volatile Organics, are documented, and whether the significance of any differences is discussed in the reports.

2.7.5 QA Reports

There should be periodic reporting of pertinent QA/QC information to the project management to allow assessment of the overall effectiveness of the QA program. There are three major types of QA reports to project management:

Periodic Report on Key QA Activities -- Provides summary of key QA activities during the period, stressing measures that are being taken to improve data quality; describes significant quality problems observed and corrective actions taken; reports information regarding any changes in certification/accreditation status; describes involvement in resolution of quality issues with clients or agencies; reports any QA organizational changes; and provides notice of the distribution of revised documents controlled by the QA organization (i.e., procedures).

Report on Measurement Quality Indicators -- Includes the assessment of QC data gathered over the period, the frequency of analyses repeated due to unacceptable QC performance, and, if possible, the reason for the unacceptable performance and corrective action taken.

Reports on QA Assessments -- Includes the results of the assessments and the plan for correcting identified deficiencies; submitted immediately following any internal or external on-site evaluation or upon receipt of the results of any performance evaluation studies.

3.0 FIELD OPERATIONS

The field operations should be conducted in such a way as to provide reliable information that meets the DQOs. To achieve this, certain minimal policies and procedures should be implemented. The OSW is considering revisions of Chapter Nine and Eleven of this manual. Supplemental information and guidance is available in the RCRA Ground-Water Monitoring Technical Enforcement Guidance Document (TEGD) (Reference 3). The project documentation should contain the information specified below.

3.1 FIELD LOGISTICS

The QAPjP should describe the type(s) of field operations to be performed and the appropriate area(s) in which to perform the work. The QAPjP should address ventilation, protection from extreme weather and temperatures, access to stable power, and provision for water and gases of required purity.

Whenever practical, the sampling site facilities should be examined prior to the start of work to ensure that all required items are available. The actual area of sampling should be examined to ensure that trucks, drilling equipment, and personnel have adequate access to the site.

The determination as to whether sample shipping is necessary should be made during planning for the project. This need is established by evaluating the analyses to be performed, sample holding times, and location of the site and the laboratory. Shipping or transporting of samples to a laboratory should be done within a timeframe such that recommended holding times are met.

Samples should be packaged, labelled, preserved (e.g., preservative added, iced, etc.), and documented in an area which is free of contamination and provides for secure storage. The level of custody and whether sample storage is needed should be addressed in the QAPjP.

Storage areas for solvents, reagents, standards, and reference materials should be adequate to preserve their identity, concentration, purity, and stability prior to use.

Decontamination of sampling equipment may be performed at the location where sampling occurs, prior to going to the sampling site, or in designated areas near the sampling site. Project documentation should specify where and how this work is accomplished. If decontamination is to be done at the site, water and solvents of appropriate purity should be available. The method of accomplishing decontamination, including the required materials, solvents, and water purity should be specified.

During the sampling process and during on-site or <u>in situ</u> analyses, waste materials are sometimes generated. The method for storage and disposal of these waste materials that complies with applicable local, state and Federal regulations should be specified. Adequate facilities should be provided for the collection and storage of all wastes, and these facilities should be operated so

as to minimize environmental contamination. Waste storage and disposal facilities should comply with applicable federal, state, and local regulations.

The location of long-term and short-term storage for field records, and the measures to ensure the integrity of the data should be specified.

3.2 EQUIPMENT/INSTRUMENTATION

The equipment, instrumentation, and supplies at the sampling site should be specified and should be appropriate to accomplish the activities planned. The equipment and instrumentation should meet the requirements of specifications, methods, and procedures as specified in the QAPjP.

3.3 OPERATING PROCEDURES

The QAPjP should describe or make reference to all field activities that may affect data quality. For routinely performed activities, standard operating procedures (SOPs) are often prepared to ensure consistency and to save time and effort in preparing QAPjPs. Any deviation from an established procedure during a data collection activity should be documented. The procedures should be available for the indicated activities, and should include, at a minimum, the information described below.

3.3.1 Sample Management

The numbering and labeling system, chain-of-custody procedures, and how the samples are to be tracked from collection to shipment or receipt by the laboratory should be specified. Sample management procedures should also specify the holding times, volumes of sample required by the laboratory, required preservatives, and shipping requirements.

3.3.2 Reagent/Standard Preparation

The procedures describing how to prepare standards and reagents should be specified. Information concerning specific grades of materials used in reagent and standard preparation, appropriate glassware and containers for preparation and storage, and labeling and record keeping for stocks and dilutions should be included.

3.3.3 Decontamination

The procedures describing decontamination of field equipment before and during the sample collection process should be specified. These procedures should include cleaning materials used, the order of washing and rinsing with the cleaning materials, requirements for protecting or covering cleaned equipment, and procedures for disposing of cleaning materials.

3.3.4 Sample Collection

The procedures describing how the sampling operations are actually performed in the field should be specified. A simple reference to standard methods is not sufficient, unless a procedure is performed exactly as described in the published method. Methods from source documents published by the EPA, American Society for Testing and Materials, U.S. Department of the Interior, National Water Well Association, American Petroleum Institute, or other recognized organizations with appropriate expertise should be used, if possible. The procedures for sample collection should include at least the following:

- Applicability of the procedure,
- Equipment required,
- Detailed description of procedures to be followed in collecting the samples,
- Common problems encountered and corrective actions to be followed, and
- Precautions to be taken.

3.3.5 Field Measurements

The procedures describing all methods used in the field to determine a chemical or physical parameter should be described in detail. The procedures should address criteria from Section 4, as appropriate.

3.3.6 Equipment Calibration And Maintenance

The procedures describing how to ensure that field equipment and instrumentation are in working order should be specified. These describe calibration procedures and schedules, maintenance procedures and schedules, maintenance logs, and service arrangements for equipment. Calibration and maintenance of field equipment and instrumentation should be in accordance with manufacturers' specifications or applicable test specifications and should be documented.

3.3.7 Corrective Action

The procedures describing how to identify and correct deficiencies in the sample collection process should be specified. These should include specific steps to take in correcting deficiencies such as performing additional decontamination of equipment, resampling, or additional training of field personnel. The procedures should specify that each corrective action should be documented with a description of the deficiency and the corrective action taken, and should include the person(s) responsible for implementing the corrective action.

3.3.8 Data Reduction and Validation

The procedures describing how to compute results from field measurements and to review and validate these data should be specified. They should include all formulas used to calculate results and procedures used to independently verify that field measurement results are correct.

3.3.9 Reporting

The procedures describing the process for reporting the results of field activities should be specified.

3.3.10 Records Management

The procedures describing the means for generating, controlling, and archiving project-specific records and field operations records should be specified. These procedures should detail record generation and control and the requirements for record retention, including type, time, security, and retrieval and disposal authorities.

Project-specific records relate to field work performed for a project. These records may include correspondence, chain-of-custody records, field notes, all reports issued as a result of the work, and procedures used.

Field operations records document overall field operations and may include equipment performance and maintenance logs, personnel files, general field procedures, and corrective action reports.

3.3.11 Waste Disposal

The procedures describing the methods for disposal of waste materials resulting from field operations should be specified.

3.4 FIELD QA AND QC REQUIREMENTS

The QAPjP should describe how the following elements of the field QC program will be implemented.

3.4.1 Control Samples

Control samples are QC samples that are introduced into a process to monitor the performance of the system. Control samples, which may include blanks (e.g., trip, equipment, and laboratory), duplicates, spikes, analytical standards, and reference materials, can be used in different phases of the data collection process beginning with sampling and continuing through transportation, storage, and analysis.

Each day of sampling, at least one field duplicate and one equipment rinsate should be collected for each matrix sampled. If this frequency is not appropriate for the sampling equipment and method, then the appropriate changes

should be clearly identified in the QAPjP. When samples are collected for volatile organic analysis, a trip blank is also recommended for each day that samples are collected. In addition, for each sampling batch (20 samples of one matrix type), enough volume should be collected for at least one sample so as to allow the laboratory to prepare one matrix spike and either one matrix duplicate or one matrix spike duplicate for each analytical method employed. This means that the following control samples are recommended:

- Field duplicate (one per day per matrix type)
- Equipment rinsate (one per day per matrix type)
- Trip blank (one per day, volatile organics only)
- Matrix spike (one per batch [20 samples of each matrix type])
- Matrix duplicate or matrix spike duplicate (one per batch)

Additional control samples may be necessary in order to assure data quality to meet the project-specific DQOs.

3.4.2 Acceptance Criteria

Procedures should be in place for establishing acceptance criteria for field activities described in the QAPjP. Acceptance criteria may be qualitative or quantitative. Field events or data that fall outside of established acceptance criteria may indicate a problem with the sampling process that should be investigated.

3.4.3 Deviations

All deviations from plan should be documented as to the extent of, and reason for, the deviation. Any activity not performed in accordance with procedures or QAPjPs is considered a deviation from plan. Deviations from plan may or may not affect data quality.

3.4.4 Corrective Action

Errors, deficiencies, deviations, certain field events, or data that fall outside established acceptance criteria should be investigated. In some instances, corrective action may be needed to resolve the problem and restore proper functioning to the system. The investigation of the problem and any subsequent corrective action taken should be documented.

3.4.5 Data Handling

All field measurement data should be reduced according to protocols described or referenced in the QAPjP. Computer programs used for data reduction should be validated before use and verified on a regular basis. All information used in the calculations should be recorded to enable reconstruction of the final result at a later date.

Data should be reported in accordance with the requirements of the end-user as described in the QAPjP.

3.5 QUALITY ASSURANCE REVIEW

The QA Review consists of internal and external assessments to ensure that QA/QC procedures are in use and to ensure that field staff conform to these procedures. QA review should be conducted as deemed appropriate and necessary.

3.6 FIELD RECORDS

Records provide the direct evidence and support for the necessary technical interpretations, judgments, and discussions concerning project activities. These records, particularly those that are anticipated to be used as evidentiary data, should directly support current or ongoing technical studies and activities and should provide the historical evidence needed for later reviews and analyses. Records should be legible, identifiable, and retrievable and protected against damage, deterioration, or loss. The discussion in this section (3.6) outlines recommended procedures for record keeping. Organizations which conduct field sampling should develop appropriate record keeping procedures which satisfy relevant technical and legal requirements.

Field records generally consist of bound field notebooks with prenumbered pages, sample collection forms, personnel qualification and training forms, sample location maps, equipment maintenance and calibration forms, chain-of-custody forms, sample analysis request forms, and field change request forms. All records should be written in indelible ink.

Procedures for reviewing, approving, and revising field records should be clearly defined, with the lines of authority included. It is recommended that all documentation errors should be corrected by drawing a single line through the error so it remains legible and should be initialed by the responsible individual, along with the date of change. The correction should be written adjacent to the error.

Records should include (but are not limited to) the following:

Calibration Records & Traceability of Standards/Reagents -- Calibration is a reproducible reference point to which all sample measurements can be correlated. A sound calibration program should include provisions for documentation of frequency, conditions, standards, and records reflecting the calibration history of a measurement system. The accuracy of the calibration standards is important because all data will be in reference to the standards used. A program for verifying and documenting the accuracy of all working standards against primary grade standards should be routinely followed.

Sample Collection -- To ensure maximum utility of the sampling effort and resulting data, documentation of the sampling protocol, as performed in the field, is essential. It is recommended that sample collection records contain, at a minimum, the names of persons conducting the activity, sample number, sample location, equipment used, climatic conditions, documentation of adherence to protocol, and unusual observations. The

actual sample collection record is usually one of the following: a bound field notebook with prenumbered pages, a pre-printed form, or digitized information on a computer tape or disc.

Chain-of-Custody Records -- The chain-of-custody involving the possession of samples from the time they are obtained until they are disposed or shipped off-site should be documented as specified in the QAPjP and should include the following information: (1) the project name; (2) signatures of samplers; (3) the sample number, date and time of collection, and grab or composite sample designation; (4) signatures of individuals involved in sample transfer; and (5) if applicable, the air bill or other shipping number.

Maps and Drawings -- Project planning documents and reports often contain maps. The maps are used to document the location of sample collection points and monitoring wells and as a means of presenting environmental data. Information used to prepare maps and drawings is normally obtained through field surveys, property surveys, surveys of monitoring wells, aerial photography or photogrammetric mapping. The final, approved maps and/or drawings should have a revision number and date and should be subject to the same controls as other project records.

QC Samples -- Documentation for generation of QC samples, such as trip and equipment rinsate blanks, duplicate samples, and any field spikes should be maintained.

Deviations -- All deviations from procedural documents and the QAPjP should be recorded in the site logbook.

Reports -- A copy of any report issued and any supporting documentation should be retained.

4.0 LABORATORY OPERATIONS

The laboratory should conduct its operations in such a way as to provide reliable information. To achieve this, certain minimal policies and procedures should be implemented.

4.1 FACILITIES

The QAPjP should address all facility-related issues that may impact project data quality. Each laboratory should be of suitable size and construction to facilitate the proper conduct of the analyses. Adequate bench space or working area per analyst should be provided. The space requirement per analyst depends on the equipment or apparatus that is being utilized, the number of samples that the analyst is expected to handle at any one time, and the number of operations that are to be performed concurrently by a single analyst. Other issues to be considered include, but are not limited to, ventilation, lighting,

control of dust and drafts, protection from extreme temperatures, and access to a source of stable power.

Laboratories should be designed so that there is adequate separation of functions to ensure that no laboratory activity has an adverse effect on the analyses. The laboratory may require specialized facilities such as a perchloric acid hood or glovebox.

Separate space for laboratory operations and appropriate ancillary support should be provided, as needed, for the performance of routine and specialized procedures.

As necessary to ensure secure storage and prevent contamination or misidentification, there should be adequate facilities for receipt and storage of samples. The level of custody required and any special requirements for storage such as refrigeration should be described in planning documents.

Storage areas for reagents, solvents, standards, and reference materials should be adequate to preserve their identity, concentration, purity, and stability.

Adequate facilities should be provided for the collection and storage of all wastes, and these facilities should be operated so as to minimize environmental contamination. Waste storage and disposal facilities should comply with applicable federal, state, and local regulations.

The location of long-term and short-term storage of laboratory records and the measures to ensure the integrity of the data should be specified.

4.2 EQUIPMENT/INSTRUMENTATION

Equipment and instrumentation should meet the requirements and specifications of the specific test methods and other procedures as specified in the QAPjP. The laboratory should maintain an equipment/instrument description list that includes the manufacturer, model number, year of purchase, accessories, and any modifications, updates, or upgrades that have been made.

4.3 OPERATING PROCEDURES

The QAPjP should describe or make reference to all laboratory activities that may affect data quality. For routinely performed activities, SOPs are often prepared to ensure consistency and to save time and effort in preparing QAPjPs. Any deviation from an established procedure during a data collection activity should be documented. It is recommended that procedures be available for the indicated activities, and include, at a minimum, the information described below.

4.3.1 Sample Management

The procedures describing the receipt, handling, scheduling, and storage of samples should be specified.

Sample Receipt and Handling -- These procedures describe the precautions to be used in opening sample shipment containers and how to verify that chain-of-custody has been maintained, examine samples for damage, check for proper preservatives and temperature, and log samples into the laboratory sample streams.

Sample Scheduling -- These procedures describe the sample scheduling in the laboratory and includes procedures used to ensure that holding time requirements are met.

Sample Storage -- These procedures describe the storage conditions for all samples, verification and documentation of daily storage temperature, and how to ensure that custody of the samples is maintained while in the laboratory.

4.3.2 Reagent/Standard Preparation

The procedures describing how to prepare standards and reagents should be specified. Information concerning specific grades of materials used in reagent and standard preparation, appropriate glassware and containers for preparation and storage, and labeling and recordkeeping for stocks and dilutions should be included.

4.3.3 General Laboratory Techniques

The procedures describing all essentials of laboratory operations that are not addressed elsewhere should be specified. These techniques should include, but are not limited to, glassware cleaning procedures, operation of analytical balances, pipetting techniques, and use of volumetric glassware.

4.3.4 Test Methods

Procedures for test methods describing how the analyses are actually performed in the laboratory should be specified. A simple reference to standard methods is not sufficient, unless the analysis is performed exactly as described in the published method. Whenever methods from SW-846 are not appropriate, recognized methods from source documents published by the EPA, American Public Health Association (APHA), American Society for Testing and Materials (ASTM), the National Institute for Occupational Safety and Health (NIOSH), or other recognized organizations with appropriate expertise should be used, if possible. The documentation of the actual laboratory procedures for analytical methods should include the following:

Sample Preparation and Analysis Procedures -- These include applicable holding time, extraction, digestion, or preparation steps as appropriate to the method; procedures for determining the appropriate dilution to

analyze; and any other information required to perform the analysis accurately and consistently.

Instrument Standardization -- This includes concentration(s) and frequency of analysis of calibration standards, linear range of the method, and calibration acceptance criteria.

Sample Data -- This includes recording requirements and documentation including sample identification number, analyst, data verification, date of analysis and verification, and computational method(s).

Precision and Bias -- This includes all analytes for which the method is applicable and the conditions for use of this information.

Detection and Reporting Limits -- This includes all analytes in the method.

Test-Specific QC -- This describes QC activities applicable to the specific test and references any applicable QC procedures.

4.3.5 Equipment Calibration and Maintenance

The procedures describing how to ensure that laboratory equipment and instrumentation are in working order should be specified. These procedures include calibration procedures and schedules, maintenance procedures and schedules, maintenance logs, service arrangements for all equipment, and spare parts available in-house. Calibration and maintenance of laboratory equipment and instrumentation should be in accordance with manufacturers' specifications or applicable test specifications and should be documented.

4.3.6 QC

The type, purpose, and frequency of QC samples to be analyzed in the laboratory and the acceptance criteria should be specified. Information should include the applicability of the QC sample to the analytical process, the statistical treatment of the data, and the responsibility of laboratory staff and management in generating and using the data. Further details on development of project-specific QC protocols are described in Section 4.4.

4.3.7 Corrective Action

The procedures describing how to identify and correct deficiencies in the analytical process should be specified. These should include specific steps to take in correcting the deficiencies such as preparation of new standards and reagents, recalibration and restandardization of equipment, reanalysis of samples, or additional training of laboratory personnel in methods and procedures. The procedures should specify that each corrective action should be documented with a description of the deficiency and the corrective action taken, and should include the person(s) responsible for implementing the corrective action.

4.3.8 Data Reduction and Validation

The procedures describing how to review and validate the data should be specified. They should include procedures for computing and interpreting the results from QC samples, and independent procedures to verify that the analytical results are reported correctly. In addition, routine procedures used to monitor precision and bias, including evaluations of reagent, equipment rinsate, and trip blanks, calibration standards, control samples, duplicate and matrix spike samples, and surrogate recovery, should be detailed in the procedures. More detailed validation procedures should be performed when required in the contract or QAPjP.

4.3.9 Reporting

The procedures describing the process for reporting the analytical results should be specified.

4.3.10 Records Management

The procedures describing the means for generating, controlling, and archiving laboratory records should be specified. The procedures should detail record generation and control, and the requirements for record retention, including type, time, security, and retrieval and disposal authorities.

Project-specific records may include correspondence, chain-of-custody records, request for analysis, calibration data records, raw and finished analytical and QC data, data reports, and procedures used.

Laboratory operations records may include laboratory notebooks, instrument performance logs and maintenance logs in bound notebooks with prenumbered pages; laboratory benchsheets; software documentation; control charts; reference material certification; personnel files; laboratory procedures; and corrective action reports.

4.3.11 Waste Disposal

The procedures describing the methods for disposal of chemicals including standard and reagent solutions, process waste, and samples should be specified.

4.4 LABORATORY QA AND QC PROCEDURES

The QAPjP should describe how the following required elements of the laboratory QC program are to be implemented.

4.4.1 Method Proficiency

Procedures should be in place for demonstrating proficiency with each analytical method routinely used in the laboratory. These should include procedures for demonstrating the precision and bias of the method as performed by the laboratory and procedures for determining the method detection limit

(MDL). All terminology, procedures and frequency of determinations associated with the laboratory's establishment of the MDL and the reporting limit should be well-defined and well-documented. Documented precision, bias, and MDL information should be maintained for all methods performed in the laboratory.

4.4.2 Control Limits

Procedures should be in place for establishing and updating control limits for analysis. Control limits should be established to evaluate laboratory precision and bias based on the analysis of control samples. Typically, control limits for bias are based on the historical mean recovery plus or minus three standard deviation units, and control limits for precision range from zero (no difference between duplicate control samples) to the historical mean relative percent difference plus three standard deviation units. Procedures should be in place for monitoring historical performance and should include graphical (control charts) and/or tabular presentations of the data.

4.4.3 Laboratory Control Procedures

Procedures should be in place for demonstrating that the laboratory is in control during each data collection activity. Analytical data generated with laboratory control samples that fall within prescribed limits are judged to be generated while the laboratory was in control. Data generated with laboratory control samples that fall outside the established control limits are judged to be generated during an "out-of-control" situation. These data are considered suspect and should be repeated or reported with qualifiers.

Laboratory Control Samples -- Laboratory control samples should be analyzed for each analytical method when appropriate for the method. A laboratory control sample consists of either a control matrix spiked with analytes representative of the target analytes or a certified reference material.

Laboratory control sample(s) should be analyzed with each batch of samples processed to verify that the precision and bias of the analytical process are within control limits. The results of the laboratory control sample(s) are compared to control limits established for both precision and bias to determine usability of the data.

Method Blank -- When appropriate for the method, a method blank should be analyzed with each batch of samples processed to assess contamination levels in the laboratory. Guidelines should be in place for accepting or rejecting data based on the level of contamination in the blank.

Procedures should be in place for documenting the effect of the matrix on method performance. When appropriate for the method, there should be at least one matrix spike and either one matrix duplicate or one matrix spike duplicate per analytical batch. Additional control samples may be necessary to assure data quality to meet the project-specific DQOs.

Matrix-Specific Bias -- Procedures should be in place for determining the bias of the method due to the matrix. These procedures should include preparation and analysis of matrix spikes, selection and use of surrogates for organic methods, and the method of standard additions for metal and inorganic methods. When the concentration of the analyte in the sample is greater than 0.1%, no spike is necessary.

Matrix-Specific Precision -- Procedures should be in place for determining the precision of the method for a specific matrix. These procedures should include analysis of matrix duplicates and/or matrix spike duplicates. The frequency of use of these techniques should be based on the DQO for the data collection activity.

Matrix-Specific Detection Limit -- Procedures should be in place for determining the MDL for a specific matrix type (e.g., wastewater treatment sludge, contaminated soil, etc).

4.4.4 Deviations

Any activity not performed in accordance with laboratory procedures or QAPjPs is considered a deviation from plan. All deviations from plan should be documented as to the extent of, and reason for, the deviation.

4.4.5 Corrective Action

Errors, deficiencies, deviations, or laboratory events or data that fall outside of established acceptance criteria should be investigated. In some instances, corrective action may be needed to resolve the problem and restore proper functioning to the analytical system. The investigation of the problem and any subsequent corrective action taken should be documented.

4.4.6 Data Handling

Data resulting from the analyses of samples should be reduced according to protocols described in the laboratory procedures. Computer programs used for data reduction should be validated before use and verified on a regular basis. All information used in the calculations (e.g., raw data, calibration files, tuning records, results of standard additions, interference check results, and blank- or background-correction protocols) should be recorded in order to enable reconstruction of the final result at a later date. Information on the preparation of the sample (e.g., weight or volume of sample used, percent dry weight for solids, extract volume, dilution factor used) should also be maintained in order to enable reconstruction of the final result at a later date.

All data should be reviewed by a second analyst or supervisor according to laboratory procedures to ensure that calculations are correct and to detect transcription errors. Spot checks should be performed on computer calculations to verify program validity. Errors detected in the review process should be referred to the analyst(s) for corrective action. Data should be reported in accordance with the requirements of the end-user. It is recommended that the supporting documentation include at a minimum:

- Laboratory name and address.
- Sample information (including unique sample identification, sample collection date and time, date of sample receipt, and date(s) of sample preparation and analysis).
- Analytical results reported with an appropriate number of significant figures.
- Detection limits that reflect dilutions, interferences, or correction for equivalent dry weight.
- Method reference.
- Appropriate QC results (correlation with sample batch should be traceable and documented).
- Data qualifiers with appropriate references and narrative on the quality of the results.

4.5 QUALITY ASSURANCE REVIEW

The QA review consists of internal and external assessments to ensure that QA/QC procedures are in use and to ensure that laboratory staff conform to these procedures. QA review should be conducted as deemed appropriate and necessary.

4.6 LABORATORY RECORDS

Records provide the direct evidence and support for the necessary technical interpretations, judgements, and discussions concerning project activities. These records, particularly those that are anticipated to be used as evidentiary data, should directly support technical studies and activities, and provide the historical evidence needed for later reviews and analyses. Records should be legible, identifiable, and retrievable, and protected against damage, deterioration, or loss. The discussion in this section (4.6) outlines recommended procedures for record keeping. Organizations which conduct field sampling should develop appropriate record keeping procedures which satisfy relevant technical and legal requirements.

Laboratory records generally consist of bound notebooks with prenumbered pages, personnel qualification and training forms, equipment maintenance and calibration forms, chain-of-custody forms, sample analysis request forms, and analytical change request forms. All records should be written in indelible ink.

Procedures for reviewing, approving, and revising laboratory records should be clearly defined, with the lines of authority included. Any documentation errors should be corrected by drawing a single line through the error so that it remains legible and should be initialed by the responsible individual, along with the date of change. The correction is written adjacent to the error.

Strip-chart recorder printouts should be signed by the person who performed the instrumental analysis. If corrections need to be made in computerized data, a system parallel to the corrections for handwritten data should be in place.

Records of sample management should be available to permit the re-creation of an analytical event for review in the case of an audit or investigation of a dubious result.

Laboratory records should include, at least, the following:

Operating Procedures -- Procedures should be available to those performing the task outlined. Any revisions to laboratory procedures should be written, dated, and distributed to all affected individuals to ensure implementation of changes. Areas covered by operating procedures are given in Sections 3.3 and 4.3.

Quality Assurance Plans -- The QAPjP should be on file.

Equipment Maintenance Documentation -- A history of the maintenance record of each system serves as an indication of the adequacy of maintenance schedules and parts inventory. As appropriate, the maintenance guidelines of the equipment manufacturer should be followed. When maintenance is necessary, it should be documented in either standard forms or in logbooks. Maintenance procedures should be clearly defined and written for each measurement system and required support equipment.

Proficiency -- Proficiency information on all compounds reported should be maintained and should include (1) precision; (2) bias; (3) method detection limits; (4) spike recovery, where applicable; (5) surrogate recovery, where applicable; (6) checks on reagent purity, where applicable; and (7) checks on glassware cleanliness, where applicable.

Calibration Records & Traceability of Standards/Reagents -- Calibration is a reproducible reference point to which all sample measurements can be correlated. A sound calibration program should include provisions for documenting frequency, conditions, standards, and records reflecting the calibration history of a measurement system. The accuracy of the calibration standards is important because all data will be in reference to the standards used. A program for verifying and documenting the accuracy and traceability of all working standards against appropriate primary grade standards or the highest quality standards available should be routinely followed.

Sample Management -- All required records pertaining to sample management should be maintained and updated regularly. These include chain-of-custody forms, sample receipt forms, and sample disposition records.

Original Data -- The raw data and calculated results for all samples should be maintained in laboratory notebooks, logs, benchsheets, files or other sample tracking or data entry forms. Instrumental output should be stored in a computer file or a hardcopy report.

QC Data -- The raw data and calculated results for all QC and field samples and standards should be maintained in the manner described in the preceding paragraph. Documentation should allow correlation of sample results with associated QC data. Documentation should also include the source and lot numbers of standards for traceability. QC samples include, but are not limited to, control samples, method blanks, matrix spikes, and matrix spike duplicates.

Correspondence -- Project correspondence can provide evidence supporting technical interpretations. Correspondence pertinent to the project should be kept and placed in the project files.

Deviations -- All deviations from procedural and planning documents should be recorded in laboratory notebooks. Deviations from QAPjPs should be reviewed and approved by the authorized personnel who performed the original technical review or by their designees.

Final Report -- A copy of any report issued and any supporting documentation should be retained.

5.0 DEFINITIONS

The following terms are defined for use in this document:

ACCURACY — The closeness of agreement between an observed value and an accepted reference value. When applied to a set of observed values, accuracy will be a combination of a random component and of a common systematic error (or bias) component.

BATCH: — A group of samples which behave similarly with respect to the sampling or the testing procedures being employed and which are processed as a unit (see Section 3.4.1 for field samples and Section 4.4.3 for laboratory samples). For QC purposes, if the number of samples in a group is greater than 20, then each group of 20 samples or less will all be handled as a separate batch.

BIAS: — The deviation due to matrix effects of the measured value (x_s - x_u) from a known spiked amount. Bias can be assessed by comparing a measured value to an accepted reference value in a sample of known concentration or by determining the recovery of a known amount of contaminant spiked into a sample (matrix spike). Thus, the bias (B) due to matrix effects based on a matrix spike is calculated as:

$$B = (x_s - x_u) - K$$

where:

x_s = measured value for spiked sample,
x_u = measured value for unspiked sample, and
K = known value of the spike in the sample.

Using the following equation yields the percent recovery (%R).

$$\%R = 100\ (x_s - x_u)/\ K$$

BLANK: see Equipment Rinsate, Method Blank, Trip Blank.

CONTROL SAMPLE: A QC sample introduced into a process to monitor the performance of the system.

DATA QUALITY OBJECTIVES (DQOs): A statement of the overall level of uncertainty that a decision-maker is willing to accept in results derived from environmental data (see reference 2, EPA/QAMS, July 16, 1986). This is qualitatively distinct from quality measurements such as precision, bias, and detection limit.

DATA VALIDATION: The process of evaluating the available data against the project DQOs to make sure that the objectives are met. Data validation may be very rigorous, or cursory, depending on project DQOs. The available data reviewed will include analytical results, field QC data and lab QC data, and may also include field records.

DUPLICATE: see Matrix Duplicate, Field Duplicate, Matrix Spike Duplicate.

EQUIPMENT BLANK: see Equipment Rinsate.

EQUIPMENT RINSATE: A sample of analyte-free media which has been used to rinse the sampling equipment. It is collected after completion of decontamination and prior to sampling. This blank is useful in documenting adequate decontamination of sampling equipment.

ESTIMATED QUANTITATION LIMIT (EQL): The lowest concentration that can be reliably achieved within specified limits of precision and accuracy during routine laboratory operating conditions. The EQL is generally 5 to 10 times the MDL. However, it may be nominally chosen within these guidelines to simplify data reporting. For many analytes the EQL analyte concentration is selected as the lowest non-zero standard in the calibration curve. Sample EQLs are highly matrix-dependent. The EQLs in SW-846 are provided for guidance and may not always be achievable.

FIELD DUPLICATES: Independent samples which are collected as close as possible to the same point in space and time. They are two separate samples taken from the same source, stored in separate containers, and analyzed independently. These duplicates are useful in documenting the precision of the sampling process.

LABORATORY CONTROL SAMPLE: A known matrix spiked with compound(s) representative of the target analytes. This is used to document laboratory performance.

MATRIX: The component or substrate (e.g., surface water, drinking water) which contains the analyte of interest.

MATRIX DUPLICATE: An intralaboratory split sample which is used to document the precision of a method in a given sample matrix.

MATRIX SPIKE: An aliquot of sample spiked with a known concentration of target analyte(s). The spiking occurs prior to sample preparation and analysis. A matrix spike is used to document the bias of a method in a given sample matrix.

MATRIX SPIKE DUPLICATES: Intralaboratory split samples spiked with identical concentrations of target analyte(s). The spiking occurs prior to sample preparation and analysis. They are used to document the precision and bias of a method in a given sample matrix.

METHOD BLANK: An analyte-free matrix to which all reagents are added in the same volumes or proportions as used in sample processing. The method blank should be carried through the complete sample preparation and analytical procedure. The method blank is used to document contamination resulting from the analytical process.

For a method blank to be acceptable for use with the accompanying samples, the concentration in the blank of any analyte of concern should not be higher than the highest of either:

(1)The method detection limit, or

(2)Five percent of the regulatory limit for that analyte, or

(3)Five percent of the measured concentration in the sample.

METHOD DETECTION LIMIT (MDL): The minimum concentration of a substance that can be measured and reported with 99% confidence that the analyte concentration is greater than zero and is determined from

analysis of a sample in a given matrix type containing the analyte.

For operational purposes, when it is necessary to determine the MDL in the matrix, the MDL should be determined by multiplying the appropriate one-sided 99% t-statistic by the standard deviation obtained from a minimum of three analyses of a matrix spike containing the analyte of interest at a concentration three to five times the estimated MDL, where the t-statistic is obtained from standard references or the table below.

No. of samples:	t-statistic
3	6.96
4	4.54
5	3.75
6	3.36
7	3.14
8	3.00
9	2.90
10	2.82

Estimate the MDL as follows:
Obtain the concentration value that corresponds to:

a) an instrument signal/noise ratio within the range of 2.5 to 5.0, or

b) the region of the standard curve where there is a significant change in sensitivity (i.e., a break in the slope of the standard curve).

Determine the variance (S^2) for each analyte as follows:

$$s^2 = \frac{1}{n-1}\left[\sum_{i=1}^{n} (x_i - \bar{x})^2\right]$$

where x_i = the ith measurement of the variable x
and $\bar{x}$ = the average value of x;

$$\bar{x} = \frac{1}{n}\sum_{i=1}^{n} x_i$$

Determine the standard deviation (s) for each analyte as follows:

$$s = (S^2)^{1/2}$$

Determine the MDL for each analyte as follows:

$$MDL = t_{(n-1,\ \alpha = .99)}(s)$$

where $t_{(n-1,\ \alpha = .99)}$ is the one-sided t-statistic appropriate for the number of samples used to determine (s), at the 99 percent level.

ORGANIC-FREE REAGENT WATER:

For volatiles, all references to water in the methods refer to water in which an interferant is not observed at the method detection limit of the compounds of interest. Organic-free reagent water can be generated by passing tap water through a carbon filter bed containing about 1 pound of activated carbon. A water purification system may be used to generate organic-free deionized water. Organic-free reagent water may also be prepared by boiling water for 15 minutes and, subsequently, while maintaining the temperature at 90°C, bubbling a contaminant-free inert gas through the water for 1 hour.

For semivolatiles and nonvolatiles, all references to water in the methods refer to water in which an interferant is not observed at the method detection limit of the compounds of interest. Organic-free reagent water can be generated by passing tap water through a carbon filter bed containing about 1 pound of activated carbon. A water purification system may be used to generate organic-free deionized water.

PRECISION:

The agreement among a set of replicate measurements without assumption of knowledge of the true value. Precision is estimated by means of duplicate/replicate analyses. These samples should contain concentrations of analyte above the MDL, and may involve the use of matrix spikes. The most commonly used estimates of precision are the relative standard deviation (RSD) or the coefficient of variation (CV),

$$RSD = CV = 100\ S/\bar{x},$$

where:
$\bar{x}$ = the arithmetic mean of the x_i measurements, and S = variance; and the relative percent difference (RPD) when only two samples are available.

$$RPD = 100\ [(x_1 - x_2)/\{(x_1 + x_2)/2\}].$$

PROJECT: Single or multiple data collection activities that are related through the same planning sequence.

QUALITY ASSURANCE PROJECT PLAN (QAPjP): An orderly assemblage of detailed procedures designed to produce data of sufficient quality to meet the data quality objectives for a specific data collection activity.

RCRA: The Resource Conservation and Recovery Act.

REAGENT BLANK: See Method Blank.

REAGENT GRADE: Analytical reagent (AR) grade, ACS reagent grade, and reagent grade are synonymous terms for reagents which conform to the current specifications of the Committee on Analytical Reagents of the American Chemical Society.

REAGENT WATER: Water that has been generated by any method which would achieve the performance specifications for ASTM Type II water. For organic analyses, see the definition of organic-free reagent water.

REFERENCE MATERIAL: A material containing known quantities of target analytes in solution or in a homogeneous matrix. It is used to document the bias of the analytical process.

SPLIT SAMPLES: Aliquots of sample taken from the same container and analyzed independently. In cases where aliquots of samples are impossible to obtain, field duplicate samples should be taken for the matrix duplicate analysis. These are usually taken after mixing or compositing and are used to document intra- or interlaboratory precision.

STANDARD ADDITION: The practice of adding a known amount of an analyte to a sample immediately prior to analysis. It is typically used to evaluate interferences.

STANDARD CURVE: A plot of concentrations of known analyte standards versus the instrument response to the analyte. Calibration standards are prepared by successively diluting a standard solution to produce working standards which cover the working range of the instrument. Standards should be prepared at the frequency specified in the appropriate

section. The calibration standards should be prepared using the same type of acid or solvent and at the same concentration as will result in the samples following sample preparation. This is applicable to organic and inorganic chemical analyses.

SURROGATE: An organic compound which is similar to the target analyte(s) in chemical composition and behavior in the analytical process, but which is not normally found in environmental samples.

TRIP BLANK: A sample of analyte-free media taken from the laboratory to the sampling site and returned to the laboratory unopened. A trip blank is used to document contamination attributable to shipping and field handling procedures. This type of blank is useful in documenting contamination of volatile organics samples.

6.0 REFERENCES

1. Interim Guidelines and Specifications for Preparing Quality Assurance Project Plans, QAMS-005/80, December 29, 1980, Office of Monitoring Systems and Quality Assurance, ORD, U.S. EPA, Washington, DC 20460.

2. Development of Data Quality Objectives, Description of Stages I and II, July 16, 1986, Quality Assurance Management Staff, ORD, U.S. EPA, Washington, DC 20460.

3. RCRA Ground-Water Monitoring Technical Enforcement Guidance Document, September, 1986, Office of Waste Programs Enforcement. OSWER, U.S. EPA, Washington, DC, 20460.

4. DQO Training Software, Version 6.5, December, 1988, Quality Assurance Management Staff, ORD, U.S. EPA, Washington, DC 20460.

5. Preparing Perfect Project Plans, EPA/600/9-89/087, October 1989, Risk Reduction Engineering Laboratory (Guy Simes), Cincinnati OH.

6. ASTM Method D 1129-77, Specification for Reagent Water. 1991 Annual Book of ASTM Standards. Volume 11.01 Water and Environmental Technology.

7. Generation of Environmental Data Related to Waste Management Activities (Draft). February 1989. ASTM.

INDEX

Accuracy 1, 13, 22, 23*, 24
Batch 12, 19, 21, 23*
Bias 2, 3, 17-20, 22, 23*-25, 28
Blank 11, 12, 14, 18-20, 23*, 24, 25, 28, 29
   Equipment Rinsate 11, 12, 14, 18, 24*
   Method Blank 19, 24, 25*, 28
   Reagent Blank 28*
   Trip Blank 12, 18, 24, 29*
Chain-of-Custody 9, 11, 13, 14, 18, 21, 22
Control Chart 18, 19
Control Sample 11, 12, 18, 19, 23, 24*
Data Quality Objectives (DQO) 1-3, 8, 12, 19, 20, 24*, 28
Decision-maker 2, 24
Duplicate 11, 12, 14, 18-20, 23, 24*, 25, 27, 28
   Field Duplicate 11, 12, 24, 25*, 28
   Matrix Duplicate 12, 19, 20, 24, 25*, 28
   Matrix Spike Duplicate 12, 19, 20, 23, 24, 25*
Equipment Blank 11, 24*
Equipment Rinsate 11, 12, 14, 18, 24*
Estimated Quantitation Limit (EQL) 24*
Field Duplicate 12, 24, 25*, 28
Laboratory Control Sample 19, 25*
Matrix 11, 12, 18-20, 23-25*, 26-28
Matrix Duplicate 12, 19, 20, 24, 25*, 28
Matrix Spike 12, 18-20, 23, 25*, 26, 27
Matrix Spike Duplicate 12, 19, 20, 23, 24, 25*
Method Blank 19, 24, 25*, 28
Method Detection Limit (MDL) 18-20, 22, 24, 25*-27
Organic-Free Reagent Water 27*, 28
Precision 1-3, 17-20, 22, 24, 25, 27*, 28
Project 1-5, 7, 8, 11-14, 17-19, 21, 23, 24, 28*
Quality Assurance Project Plan (QAPjP) 1-9, 11, 12, 14, 15, 18, 20, 22, 23, 28*
RCRA 1, 8, 28*
Reagent Blank 28*
Reagent Grade 28*
Reagent Water 27, 28*
Reference Material 8, 11, 15, 18, 19, 28*
Split Samples 25, 28*
Standard Addition 20, 28*
Standard Curve 26, 28*
Surrogate 18, 20, 22, 29*
Trip Blank 12, 18, 24, 29*

---

* Definition of term.

CHAPTER FIVE

MISCELLANEOUS TEST METHODS

The following methods are found in Chapter Five:

Method 5050:	Bomb Preparation Method for Solid Waste
Method 9010A:	Total and Amenable Cyanide (Colorimetric, Manual)
Method 9012:	Total and Amenable Cyanide (Colorimetric, Automated UV)
Method 9013:	Cyanide Extraction Procedure for Solids and Oils
Method 9020B:	Total Organic Halides (TOX)
Method 9021:	Purgeable Organic Halides (POX)
Method 9022:	Total Organic Halides (TOX) by Neutron Activation Analysis
Method 9030A:	Acid-Soluble and Acid-Insoluble Sulfides
Method 9031:	Extractable Sulfides
Method 9035:	Sulfate (Colorimetric, Automated, Chloranilate)
Method 9036:	Sulfate (Colorimetric, Automated, Methylthymol Blue, AA II)
Method 9038:	Sulfate (Turbidimetric)
Method 9056:	Determination of Inorganic Anions by Ion Chromatography Method
Method 9060:	Total Organic Carbon
Method 9065:	Phenolics (Spectrophotometric, Manual 4-AAP with Distillation)
Method 9066:	Phenolics (Colorimetric, Automated 4-AAP with Distillation)
Method 9067:	Phenolics (Spectrophotometric, MBTH with Distillation)
Method 9070:	Total Recoverable Oil & Grease (Gravimetric, Separatory Funnel Extraction)
Method 9071A:	Oil and Grease Extraction Method for Sludge and Sediment Samples
Method 9075:	Test Method for Total Chlorine in New and Used Petroleum Products by X-Ray Fluorescence Spectrometry (XRF)
Method 9076:	Test Method for Total Chlorine in New and Used Petroleum Products by Oxidative Combustion and Microcoulometry
Method 9077:	Test Methods for Total Chlorine in New and Used Petroleum Products (Field Test Kit Methods)
Method 9131:	Total Coliform: Multiple Tube Fermentation Technique
Method 9132:	Total Coliform: Membrane Filter Technique
Method 9200:	Nitrate
Method 9250:	Chloride (Colorimetric, Automated Ferricyanide AAI)
Method 9251:	Chloride (Colorimetric, Automated FerricyanideAAII)
Method 9252A:	Chloride (Titrimetric, Mercuric Nitrate)
Method 9253:	Chloride (Titrimetric, Silver Nitrate)
Method 9320:	Radium-228

METHOD 5050

BOMB PREPARATION METHOD FOR SOLID WASTE

1.0 SCOPE AND APPLICATION

1.1 This method describes the sample preparation steps necessary to determine total chlorine in solid waste and virgin and used oils, fuels and related materials, including: crankcase, hydraulic, diesel, lubricating and fuel oils, and kerosene by bomb oxidation and titration or ion chromatography. Depending on the analytical finish chosen, other halogens (bromine and fluorine) and other elements (sulfur and nitrogen) may also be determined.

1.2 The applicable range of this method varies depending on the analytical finish chosen. In general, levels as low as 500 μg/g chlorine in the original oil sample can be determined. The upper range can be extended to percentage levels by dilution of the combustate.

1.3 This standard may involve hazardous materials, operations, and equipment. This standard does not purport to address all of the safety problems associated with its use. It is the responsibility of the user of this standard to establish appropriate safety and health practices and determine the applicability of regulatory limitations prior to use. Specific safety statements are given in Section 3.0.

2.0 SUMMARY OF METHOD

2.1 The sample is oxidized by combustion in a bomb containing oxygen under pressure. The liberated halogen compounds are absorbed in a sodium carbonate/sodium bicarbonate solution. Approximately 30 to 40 minutes are required to prepare a sample by this method. Samples with a high water content (> 25%) may not combust efficiently and may require the addition of a mineral oil to facilitate combustion. Complete combustion is still not guaranteed for such samples.

2.2 The bomb combustate solution can then be analyzed for the following elements as their anion species by one or more of the following methods:

Method	Title
9252	Chloride (Titrimetric, Mercuric Nitrate)
9253	Chloride (Titrimetric, Silver Nitrate)
9056	Inorganic Anions by Ion Chromatography (Chloride, Sulfate, Nitrate, Phosphate, Fluoride, Bromide)

NOTE: Strict adherence to all of the provisions prescribed hereinafter ensures against explosive rupture of the bomb, or a blowout, provided the bomb is of proper design and construction and in good mechanical condition. It is desirable, however, that the bomb be enclosed in a shield of steel plate at least 1/2 in. (12.7 mm) thick, or equivalent protection be provided against unforeseeable contingencies.

3.0 INTERFERENCES

3.1 Samples with very high water content (> 25%) may not combust efficiently and may require the addition of a mineral oil to facilitate combustion.

3.2 To determine total nitrogen in samples, the bombs must first be purged of ambient air. Otherwise, nitrogen results will be biased high.

4.0 APPARATUS AND MATERIALS

4.1 Bomb, having a capacity of not less than 300 mL, so constructed that it will not leak during the test, and that quantitative recovery of the liquids from the bomb may be readily achieved. The inner surface of the bomb may be made of stainless steel or any other material that will not be affected by the combustion process or products. Materials used in the bomb assembly, such as the head gasket and lead-wire insulation, shall be resistant to heat and chemical action and shall not undergo any reaction that will affect the chlorine content of the sample in the bomb.

4.2 Sample cup, platinum or stainless steel, 24 mm in outside diameter at the bottom, 27 mm in outside diameter at the top, 12 mm in height outside, and weighing 10 to 11 g.

4.3 Firing wire, platinum or stainless steel, approximately No. 26 B & S gage.

4.4 Ignition circuit, capable of supplying sufficient current to ignite the nylon thread or cotton wicking without melting the wire.

NOTE: The switch in the ignition circuit shall be of the type that remains open, except when held in closed position by the operator.

4.5 Nylon sewing thread, or Cotton Wicking, white.

4.6 Funnel, to fit a 100-mL volumetric flask.

4.7 Class A volumetric flasks, 100-mL, one per sample.

4.8 Syringe, 5- or 10-mL disposable plastic or glass.

4.9 Apparatus for specific analysis methods are given in the methods.

4.10 Analytical balance: capable of weighing to 0.0001 g.

5.0 REAGENTS

5.1 Purity of reagents. Reagent-grade chemicals shall be used in all tests. Unless otherwise indicated, it is intended that all reagents shall conform to the specifications of the Committee on Analytical Reagents of the American Chemical Society, where such specifications are available. Other grades may be used, provided it is first ascertained that the reagent is of sufficiently high purity to permit its use without lessening the accuracy of the determination.

5.2 Reagent water. All references to water in this method refer to reagent water, as defined in Chapter One.

5.3 Oxygen. Free of combustible material and halogen compounds, available at a pressure of 40 atm.

WARNING: Oxygen vigorously accelerates combustion (see Appendix A1.1)

5.4 Sodium bicarbonate/sodium carbonate solution. Dissolve 2.5200 g $NaHCO_3$ and 2.5440 g Na_2CO_3 in reagent water and dilute to 1 L.

5.5 White oil. Refined.

5.6 Reagents and materials for specific analysis methods are given in the methods.

6.0 SAMPLE COLLECTION, PRESERVATION, AND HANDLING

6.1 All samples must be collected using a sampling plan that addresses the considerations discussed in Chapter Nine.

6.2 Ensure that the portion of the sample used for the test is representative of the sample.

6.3 To minimize losses of volatile halogenated solvents that may be present in the sample, keep the field and laboratory samples as free of headspace as possible.

6.4 Because used oils may contain toxic and/or carcinogenic substances appropriate field and laboratory safety procedures should be followed.

7.0 PROCEDURE

7.1 Sample Preparation

7.1.1 Preparation of bomb and sample. Cut a piece of firing wire approximately 100 mm in length and attach the free ends to the terminals. Arrange the wire so that it will be just above and not touching the sample cup. Loop a cotton thread around the wire so that the ends will extend into the sampling cup. Pipet 10 mL of the $NaHCO_3/Na_2CO_3$ solution into the bomb, wetting the sides. Take an aliquot of the oil sample of approximately 0.5 g using a 5- or 10-mL disposable plastic syringe, and place in the sample cup. The actual sample weight is determined by the difference

between the weight of the empty and filled syringe. Do not use more than 1 g of sample.

NOTE: After repeated use of the bomb for chlorine determination, a film may be noticed on the inner surface. This dullness should be removed by periodic polishing of the bomb. A satisfactory method for doing this is to rotate the bomb in a lathe at about 300 rpm and polish the inside surface with Grit No. 2/0 or equivalent paper[1] coated with a light machine oil to prevent cutting, and then with a paste of grit-free chromic oxide[2] and water. This procedure will remove all but very deep pits and put a high polish on the surface. Before using the bomb, it should be washed with soap and water to remove oil or paste left from the polishing operation. Bombs with porous or pitted surfaces should never be used because of the tendency to retain chlorine from sample to sample.

NOTE: If the sample is not readily combustible, other nonvolatile, chlorine-free combustible diluents such as white oil may be employed. However, the combined weight of sample and nonvolatile diluent shall not exceed 1 g. Some solid additives are relatively insoluble but may be satisfactorily burned when covered with a layer of white oil.

NOTE: The practice of alternately running samples high and low in chlorine content should be avoided whenever possible. It is difficult to rinse the last traces of chlorine from the walls of the bomb, and the tendency for residual chlorine to carry over from sample to sample has been observed in a number of laboratories. When a sample high in chlorine has preceded one low in chlorine content, the test on the low-chlorine sample should be repeated, and one or both of the low values thus obtained should be considered suspect if they do not agree within the limits of repeatability of this method.

NOTE: Do not use more than 1 g total of sample and white oil or other chlorine-free combustible material. Use of excess amounts of these materials could cause a buildup of dangerously high pressure and possible rupture of the bomb.

7.1.2 Addition of oxygen. Place the sample cup in position and arrange the thread so that the end dips into the sample. Assemble the bomb and tighten the cover securely. Admit oxygen slowly (to avoid blowing the oil from the cup) until a pressure is reached as indicated in Table 1.

NOTE: Do not add oxygen or ignite the sample if the bomb has been jarred, dropped, or tiled.

---

[1]Emery Polishing Paper grit No. 2/0 may be purchased from the Behr-Manning Co., Troy, NY.

[2]Chromic oxide may be purchased from J.T. Baker & Co., Phillipsburg, NJ.

7.1.3 Combustion. Immerse the bomb in a cold water bath. Connect the terminals to the open electrical circuit. Close the circuit to ignite the sample. Remove the bomb from the bath after immersion for at least 10 minutes. Release the pressure at a slow, uniform rate such that the operation requires at least 1 min. Open the bomb and examine the contents. If traces of unburned oil or sooty deposits are found, discard the determination, and thoroughly clean the bomb before using it again.

7.1.4 Collection of halogen solution. Using reagent water and a funnel, thoroughly rinse the interior of the bomb, the sample cup, the terminals, and the inner surface of the bomb cover into a 100-mL volumetric flask. Dilute to the mark with reagent water.

7.1.5 Cleaning procedure for bomb and sample cup. Remove any residual fuse wire from the terminals and the cup. Using hot water, rinse the interior of the bomb, the sample cup, the terminals, and the inner surface of the bomb cover. (If any residue remains, first scrub the bomb with Alconox solution). Copiously rinse the bomb, cover, and cup with reagent water.

7.2 Sample Analysis. Analyze the combustate for chlorine or other halogens using the methods listed in Step 2.2. It may be necessary to dilute the samples so that the concentration will fall within the range of standards.

7.3 Calculations. Calculate the concentrations of each element detected in the sample according to the following equation:

$$C_o = \frac{C_{com} \times V_{com} \times DF}{W_o} \qquad (1)$$

where:

C_o = concentration of element in the sample, µg/g
C_{com} = concentration of element in the combustate, µg/mL
V_{com} = total volume of combustate, mL
DF = dilution factor
W_o = weight of sample combusted, g.

Report the concentration of each element detected in the sample in micrograms per gram.

Example: A 0.5-g oil sample was combusted, yielding 10 mL of combustate. The combustate was diluted to 100 mL total volume and analyzed for chloride, which was measured to be 5 μg/mL. The concentration of chlorine in the original sample is then calculated as shown below:

$$C_o = \frac{\frac{5\ \mu g}{mL} \times (10\ mL) \times (10)}{0.5\ g} \qquad (2)$$

$$C_o = 1{,}000\ \frac{\mu g}{g} \qquad (3)$$

8.0 QUALITY CONTROL

8.1 Refer to Chapter One for specific quality control procedures.

8.2 One sample in ten should be bombed twice. The results should agree to within 10%, expressed as the relative percent difference of the results.

8.3 Analyze matrix spike and matrix spike duplicates - spike samples with the elements of interest at a level commensurate with the levels being determined. The spiked compounds should be similar to those expected in the sample. Any sample suspected of containing > 25% water should also be spiked with organic chlorine.

8.4 For higher levels (e.g., percent levels), spiking may be inappropriate. For these cases, samples of known composition should be combusted. The results should agree to within 10% of the expected result.

8.5 Quality control for the analytical method(s) of choice should be followed.

9.0 PERFORMANCE

See analytical methods referenced in Step 2.2.

10.0 REFERENCES

1. ASTM Method D 808-81, Standard Test Method for Chlorine in New and Used Petroleum Products (Bomb Method). 1988 Annual Book of ASTM Standards. Volume 05.01 Petroleum Products and Lubricants.

2. Gaskill, A.; Estes, E. D.; Hardison, D. L.; and Myers, L. E. Validation of Methods for Determining Chlorine in Used Oils and Oil Fuels. Prepared for U.S. Environmental Protection Agency, Office of Solid Waste. EPA Contract No. 68-01-7075, WA 80. July 1988.

TABLE 1.
GAGE PRESSURES

Capacity of bomb, mL	Minimum gage pressure[a], atm	Maximum gage pressure[a], atm
300 to 350	38	40
350 to 400	35	37
400 to 450	30	32
450 to 500	27	29

[a]The minimum pressures are specified to provide sufficient oxygen for complete combustion, and the maximum pressures represent a safety requirement. Refer to manufacturers' specifications for appropriate gage pressure, which may be lower than those listed here.

APPENDIX

A1. PRECAUTIONARY STATEMENTS

A1.1 Oxygen

Warning--Oxygen vigorously accelerates combustion.

Keep oil and grease away. Do not use oil or grease on regulators, gages, or control equipment.

Use only with equipment conditioned for oxygen service by careful cleaning to remove oil, grease, and other combustibles.

Keep combustibles away from oxygen and eliminate ignition sources.

Keep surfaces clean to prevent ignition or explosion, or both, on contact with oxygen.

Always use a pressure regulator. Release regulator tension before opening cylinder valve.

All equipment and containers used must be suitable and recommended for oxygen service.

Never attempt to transfer oxygen from cylinder in which it is received to any other cylinder. Do not mix gases in cylinders.

Do not drop cylinder. Make sure cylinder is secured at all times.

Keep cylinder valve closed when not in use.

Stand away from outlet when opening cylinder valve.

For technical use only. Do not use for inhalation purposes.

Keep cylinder out of sun and away from heat.

Keep cylinders from corrosive environment.

Do not use cylinder without label.

Do not use dented or damaged cylinders.

See Compressed Gas Association booklets G-4 and G4.1 for details of safe practice in the use of oxygen.

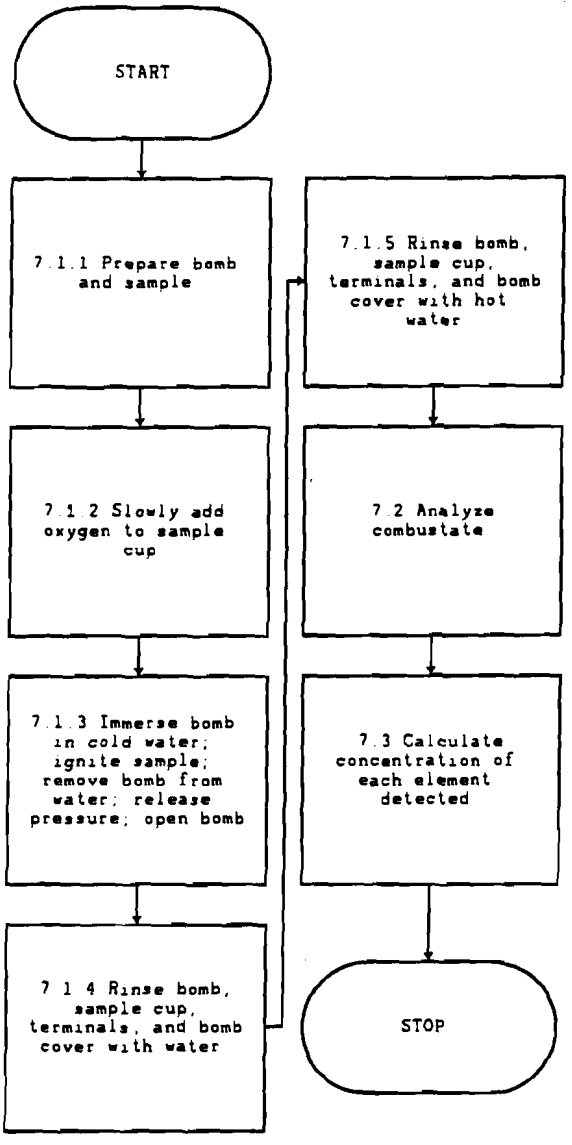
START
7.1.1 Prepare bomb and sample
7.1.2 Slowly add oxygen to sample cup
7.1.3 Immerse bomb in cold water; ignite sample; remove bomb from water; release pressure; open bomb
7.1.4 Rinse bomb, sample cup, terminals, and bomb cover with water
7.1.5 Rinse bomb, sample cup, terminals, and bomb cover with hot water
7.2 Analyze combustate
7.3 Calculate concentration of each element detected
STOP

METHOD 9010A

TOTAL AND AMENABLE CYANIDE

1.0 SCOPE AND APPLICATION

1.1 Method 9010 is used to determine the concentration of inorganic cyanide (CAS Registry Number 57-12-5) in wastes or leachate. The method detects inorganic cyanides that are present as either soluble salts or complexes. It is used to determine values for both total cyanide and cyanide amenable to chlorination. The "reactive" cyanide content of a waste, that is, the cyanide content that could generate toxic fumes when exposed to mild acidic conditions, is not distilled by Method 9010 (refer to Chapter Seven). However, Method 9010 is used to quantify the concentration of cyanide from the reactivity test.

1.2 The titration procedure using silver nitrate with p-dimethylamino-benzal-rhodanine indicator is used for measuring concentrations of cyanide exceeding 0.1 mg/L (0.025 mg/250 mL of absorbing liquid).

1.3 The colorimetric procedure is used for concentrations below 1 mg/L of cyanide and is sensitive to about 0.02 mg/L.

1.4 This method was designed to address the problem of "trace" analyses (<1000 ppm). The method may also be used for "minor" (1000 ppm - 10,000 ppm) and "major" (>10,000 ppm) analyses by adapting the sample preparation techniques or cell path length. However, the amount of sodium hydroxide in the standards and the sample analyzed must be the same.

2.0 SUMMARY OF METHOD

2.1 The cyanide, as hydrocyanic acid (HCN), is released from samples containing cyanide by means of a reflux-distillation operation under acidic conditions and absorbed in a scrubber containing sodium hydroxide solution. The cyanide in the absorbing solution is then determined colorimetrically or titrametrically.

2.2 In the colorimetric measurement, the cyanide is converted to cyanogen chloride (CNCl) by reaction of cyanide with chloramine-T at a pH less than 8. After the reaction is complete, color is formed on the addition of pyridine-barbituric acid reagent. The absorbance is read at 578 nm for the complex formed with pyridine-barbituric acid reagent and CNCl. To obtain colors of comparable intensity, it is essential to have the same salt content in both the sample and the standards.

2.3 The titration measurement uses a standard solution of silver nitrate to titrate cyanide in the presence of a silver sensitive indicator.

3.0 INTERFERENCES

3.1 Interferences are eliminated or reduced by using the distillation procedure. Chlorine and sulfide are interferences in Method 9010.

3.2 Oxidizing agents such as chlorine decompose most cyanides. Chlorine interferences can be removed by adding an excess of sodium arsenite to the waste prior to preservation and storage of the sample to reduce the chlorine to chloride which does not interfere.

3.3 Sulfide interference can be removed by adding an excess of bismuth nitrate to the waste (to precipitate the sulfide) before distillation. Samples that contain hydrogen sulfide, metal sulfides, or other compounds that may produce hydrogen sulfide during the distillation should be treated by the addition of bismuth nitrate.

3.4 High results may be obtained for samples that contain nitrate and/or nitrite. During the distillation, nitrate and nitrite will form nitrous acid, which will react with some organic compounds to form oximes. These compounds once formed will decompose under test conditions to generate HCN. The possibility of interference of nitrate and nitrite is eliminated by pretreatment with sulfamic acid just before distillation. Nitrate and nitrite are interferences when present at levels higher than 10 mg/L and in conjunction with certain organic compounds.

3.5 Thiocyanate is reported to be an interference when present at very high levels. Levels of 10 mg/L were not found to interfere.

3.6 Fatty acids, detergents, surfactants, and other compounds may cause foaming during the distillation when they are present in large concentrations and will make the endpoint of the titration difficult to detect. They may be extracted at pH 6-7.

4.0 APPARATUS AND MATERIALS

4.1 Reflux distillation apparatus such as shown in Figure 1 or Figure 2. The boiling flask should be of one liter size with inlet tube and provision for condenser. The gas scrubber may be a 270-mL Fisher-Milligan scrubber (Fisher, Part No. 07-513) or equivalent. The reflux apparatus may be a Wheaton 377160 distillation unit or equivalent.

4.2 Spectrophotometer - Suitable for measurements at 578 nm with a 1.0 cm cell or larger.

4.3 Hot plate stirrer/heating mantle.

4.4 pH meter.

4.5 Amber light.

4.6 Vacuum source.

4.7 Refrigerator.

4.8 5 mL microburette

4.9 7 Class A volumetric flasks - 100 and 250 mL

4.10 Erlenmeyer flask - 500 mL

5.0 REAGENTS

5.1 Reagent grade chemicals shall be used in all tests. Unless otherwise indicated, it is intended that all reagents shall conform to the specifications of the Committee on Analytical Reagents of the American Chemical Society, where such specifications are available. Other grades may be used, provided it is first ascertained that the reagent is of sufficiently high purity to permit its use without lessening the accuracy of the determination.

5.2 Reagent water. All references to water in this method refer to reagent water, as defined in Chapter One.

5.3 Reagents for sample collection, preservation, and handling

5.3.1 Sodium arsenite (0.1N), $NaAsO_2$. Dissolve 3.2 g $NaAsO_2$ in 250 mL water.

5.3.2 Ascorbic acid, $C_6H_8O_6$.

5.3.3 Sodium hydroxide solution (50%), NaOH. Commercially available.

5.3.4 Acetic acid (1.6M) CH_3COOH. Dilute one part of concentrated acetic acid with 9 parts of water.

5.3.5 2,2,4-Trimethylpentane, C_8H_{18}.

5.3.6 Hexane, C_6H_{14}.

5.3.7 Chloroform, $CHCl_3$.

5.4 Reagents for cyanides amenable to chlorination

5.4.1 Calcium hypochlorite solution (0.35M), $Ca(OCl)_2$. Combine 5 g of calcium hypochlorite and 100 mL of water. Shake before using.

5.4.2 Sodium hydroxide solution (1.25N), NaOH. Dissolve 50 g of NaOH in 1 liter of water.

5.4.3 Sodium arsenite (0.1N). See Step 5.3.1.

5.4.4 Potassium iodide starch paper.

5.5 Reagents for distillation

5.5.1 Sodium hydroxide (1.25N). See Step 5.4.2.

5.5.2 Bismuth nitrate (0.062M), $Bi(NO)_3 \cdot 5H_2O$. Dissolve 30 g $Bi(NO)_3 \cdot 5H_2O$ in 100 mL of water. While stirring, add 250 mL of glacial acetic acid, CH_3COOH. Stir until dissolved and dilute to 1 liter with water.

5.5.3 Sulfamic acid (0.4N), H_2NSO_3H. Dissolve 40 g H_2NSO_3H in 1 liter of water.

5.5.4 Sulfuric acid (18N), H_2SO_4. Slowly and carefully add 500 mL of concentrated H_2SO_4 to 500 mL of water.

5.5.5 Magnesium chloride solution (2.5M), $MgCl_2 \bullet 6H_2O$. Dissolve 510 g of $MgCl_2 \bullet 6H_2O$ in 1 liter of water.

5.5.6 Lead acetate paper.

5.6 Reagents for spectrophotometric determination

5.6.1 Sodium hydroxide solution (0.25N), NaOH. Dissolve 10 g NaOH in 1 liter of water.

5.6.2 Sodium phosphate monobasic (1M), $NaH_2PO_4 \bullet H_2O$. Dissolve 138 g of $NaH_2PO_4 \bullet H_2O$ in 1 liter of water. Refrigerate this solution.

5.6.3 Chloramine-T solution (0.44%), $C_7H_7ClNNaO_2S$. Dissolve 1.0 g of white, water soluble chloramine-T in 100 mL of water and refrigerate until ready to use.

5.6.4 Pyridine-Barbituric acid reagent, $C_5H_5N \bullet C_4H_4N_2O_3$. Place 15 g of barbituric acid in a 250-mL volumetric flask and add just enough water to wash the sides of the flask and wet the barbituric acid. Add 75 mL of pyridine and mix. Add 15 mL of concentrated hydrochloric acid (HCl), mix, and cool to room temperature. Dilute to 250 mL with water. This reagent is stable for approximately six months if stored in a cool, dark place.

5.6.5 Stock potassium cyanide solution (1 mL = 1000 μg CN^-), KCN. Dissolve 2.51 g of KCN and 2 g KOH in 900 mL of water. Standardize with 0.0192N silver nitrate, $AgNO_3$. Dilute to appropriate concentration to achieve 1 mL = 1000 μg of CN^-.

NOTE: Detailed procedure for $AgNO_3$ standardization is described in "Standard Methods for the Examination of Water and Wastewater", 16th Edition, (1985), Methods 412C and 407A.

5.6.6 Intermediate standard potassium cyanide solution, (1 mL = 100 μg CN^-), KCN. Dilute 100 mL of stock potassium cyanide solution (1 mL = 1000 μg CN^-) to 1000 mL with water.

5.6.7 Working standard potassium cyanide solution (1 mL = 10 μg CN^-), KCN. Prepare fresh daily by diluting 100 mL of intermediate standard potassium cyanide solution and 10 mL of 1N NaOH to 1 liter with water.

5.7 Reagents for titration procedure

5.7.1 Rhodanine indicator - Dissolve 20 mg of p-dimethylamino-benzal-rhodanine, $C_{12}H_{12}N_2OS_2$, in 100 mL of acetone.

5.7.2 Standard silver nitrate solution (0.0192N), $AgNO_3$. Prepare by crushing approximately 5 g $AgNO_3$ and drying to constant weight at 40°C. Weigh out 3.2647 g of dried $AgNO_3$. Dissolve in 1 liter of water.

NOTE: Detailed procedure for $AgNO_3$ standardization is described in "Standard Methods for the Examination of Water and Wastewater", 16th Edition, (1985), Methods 412C and 407A.

6.0 SAMPLE COLLECTION, PRESERVATION AND HANDLING

6.1 All samples must be collected using a sampling plan that addresses the considerations discussed in Chapter Nine.

6.2 Samples should be collected in plastic or glass containers. All containers must be thoroughly cleaned and rinsed.

6.3 Oxidizing agents such as chlorine decompose most cyanides. To determine whether oxidizing agents are present, test a drop of the sample with potassium iodide-starch test paper. A blue color indicates the need for treatment. Add 0.1N sodium arsenite solution a few mL at a time until a drop of sample produces no color on the indicator paper. Add an additional 5 mL of sodium arsenite solution for each liter of sample. Ascorbic acid can be used as an alternative although it is not as effective as arsenite. Add a few crystals of ascorbic acid at a time until a drop of sample produces no color on the indicator paper. Then add an additional 0.6 g of ascorbic acid for each liter of sample volume.

6.4 Aqueous samples must be preserved by adding 50% sodium hydroxide until the pH is greater than or equal to 12 at the time of collection.

6.5 Samples should be chilled to 4°C.

6.6 When properly preserved, cyanide samples can be stored for up to 14 days prior to sample preparation steps.

6.7 Solid and oily wastes may be extracted prior to analysis by method 9013. It uses a dilute NaOH solution (pH = 12) as the extractant. This yields extractable cyanide.

6.8 If fatty acids, detergents, and surfactants are a problem, they may be extracted using the following procedure. Acidify the sample with acetic acid (1.6M) to pH 6.0 to 7.0.

CAUTION: This procedure can produce lethal HCN gas.

Extract with isooctane, hexane, or chloroform (preference in order named) with solvent volume equal to 20% of the sample volume. One extraction is usually adequate to reduce the compounds below the interference level. Avoid multiple extractions or a long contact time at low pH in order to keep the loss of HCN at a minimum. When the extraction is completed, immediately raise the pH of the sample to above 12 with 50% NaOH solution.

7.0 PROCEDURE

7.1 Pretreatment for cyanides amenable to chlorination

7.1.1 This test must be performed under amber light. $K_3[Fe(CN)_6]$ may decompose under UV light and hence will test positive for cyanide amenable to chlorination if exposed to fluorescent lighting or sunlight. Two identical sample aliquots are required to determine cyanides amenable to chlorination.

7.1.2 To one 500 mL sample or to a sample diluted to 500 mL, add calcium hypochlorite solution dropwise while agitating and maintaining the pH between 11 and 12 with 1.25N sodium hydroxide until an excess of chlorine is present as indicated by KI-starch paper turning blue. The sample will be subjected to alkaline chlorination by this step.

CAUTION: The initial reaction product of alkaline chlorination is the very toxic gas cyanogen chloride; therefore, it is necessary that this reaction be performed in a hood.

7.1.3 Test for excess chlorine with KI-starch paper and maintain this excess for one hour with continuous agitation. A distinct blue color on the test paper indicates a sufficient chlorine level. If necessary, add additional calcium hypochlorite solution.

7.1.4 After one hour, add 1 mL portions of 0.1N sodium arsenite until KI-starch paper shows no residual chlorine. Add 5 mL of excess sodium arsenite to ensure the presence of excess reducing agent.

7.1.5 Test for total cyanide as described below in both the chlorinated and the unchlorinated samples. The difference of total cyanide in the chlorinated and unchlorinated samples is the cyanide amenable to chlorination.

7.2 Distillation Procedure

7.2.1 Place 500 mL of sample, or sample diluted to 500 mL in the one liter boiling flask. Pipet 50 mL of 1.25N sodium hydroxide into the gas scrubber. If the apparatus in Figure 1 is used, add water until the spiral is covered. Connect the boiling flask, condenser, gas scrubber and vacuum trap.

7.2.2 Start a slow stream of air entering the boiling flask by adjusting the vacuum source. Adjust the vacuum so that approximately two bubbles of air per second enter the boiling flask through the air inlet tube.

7.2.3 If samples are known or suspected to contain sulfide, add 50 mL of 0.062M bismuth nitrate solution through the air inlet tube. Mix for three minutes. Use lead acetate paper to check the sample for the presence of sulfide. A positive test is indicated by a black color on the paper.

7.2.4 If samples are known or suspected to contain nitrate or nitrite, or if bismuth nitrate was added to the sample, add 50 mL of 0.4N sulfamic acid solution through the air inlet tube. Mix for three minutes.

Note: Excessive use of sulfamic acid could create method bias.

7.2.5 Slowly add 50 mL of 18N sulfuric acid through the air inlet tube. Rinse the tube with water and allow the airflow to mix the flask contents for three minutes. Add 20 mL of 2.5M magnesium chloride through the air inlet and wash the inlet tube with a stream of water.

7.2.6 Heat the solution to boiling. Reflux for one hour. Turn off heat and continue the airflow for at least 15 minutes. After cooling the boiling flask, and closing the vacuum source, disconnect the gas scrubber.

7.2.7 Transfer the solution from the scrubber into a 250-mL volumetric flask. Rinse the scrubber into the volumetric flask. Dilute to volume with water.

7.2.8 If the manual spectrophotometric determination will be performed, proceed to Step 7.3.1. If the titration procedure will be performed, proceed to Step 7.7.

7.3 Manual spectrophotometric determination

7.3.1 Pipet 50 mL of the scrubber solution into a 100-mL volumetric flask. If the sample is later found to be beyond the linear range of the colorimetric determination and redistillation of a smaller sample is not feasible, a smaller aliquot may be taken. If less than 50 mL is taken, dilute to 50 mL with 0.25N sodium hydroxide solution.

NOTE: Temperature of reagents and spiking solution can affect the response factor of the colorimetric determination. The reagents stored in the refrigerator should be warmed to ambient temperature before use. Samples should not be left in a warm instrument to develop color, but instead they should be aliquoted to a cuvette immediately prior to reading the absorbance.

7.3.2 Add 15 mL of 1M sodium phosphate solution and mix. Add 2 mL of chloramine-T and mix. Some distillates may contain compounds that have chlorine demand. One minute after the addition of chloramine-T, test for excess chlorine with KI-starch paper. If the test is negative, add 0.5 mL chloramine-T. After one minute recheck with KI-starch paper. Continue to add chloramine-T in 0.5 mL increments until an excess is maintained. After 1 to 2 minutes, add 5 mL of pyridine-barbituric acid solution and mix.

7.3.3 Dilute to 100 mL with water and mix again. Allow 8 minutes for color development and then read the absorbance at 578 nm in a 1-cm cell within 15 minutes. The sodium hydroxide concentration will be 0.125N.

7.4 Standard curve for samples without sulfide

7.4.1 Prepare a series of standards by pipetting suitable volumes of working standard potassium cyanide solution into 250-mL volumetric flasks. To each flask, add 50 mL of 1.25N sodium hydroxide and dilute to 250 mL with water. Prepare using the following table. The sodium hydroxide concentration will be 0.25N.

mL of Working Standard Solution (1 mL = 10 µg CN^-)	Concentration (µg CN^-/L)
0	Blank
1.0	40
2.0	80
5.0	200
10.0	400
15.0	600
20.0	800

7.4.2 After the standard solutions have been prepared according to the table above, pipet 50 mL of each standard solution into a 100-mL volumetric flask and proceed to Steps 7.3.2 and 7.3.3 to obtain absorbance values for the standard curve. The final concentrations for the standard curve will be one half of the amounts in the above table (final concentrations ranging from 20 to 400 µg/L).

7.4.3 It is recommended that at least two standards (a high and a low) be distilled and compared to similar values on the curve to ensure that the distillation technique is reliable. If distilled standards do not agree within ± 10% of the undistilled standards, the analyst should find the cause of the apparent error before proceeding.

7.4.4 Prepare a standard curve ranging from 20 to 400 µg/L by plotting absorbance of standard versus the cyanide concentration

7.5 Standard curve for samples with sulfide

7.5.1 It is imperative that all standards be distilled in the same manner as the samples using the method of standard additions. Standards distilled by this method will give a linear curve, at low concentrations, but as the concentration increases, the recovery decreases. It is recommended that at least five standards be distilled.

7.5.2 Prepare a series of standards similar in concentration to those mentioned in Step 7.4.1 and analyze as in Step 7.3. Prepare a standard curve by plotting absorbance of standard versus the cyanide concentration.

7.6 Calculation - If the spectrophotometric procedure is used, calculate the cyanide, in µg/L, in the original sample as follows.

$$CN^- \ (\mu g/L) = \frac{A \times B \times C}{D \times E}$$

where:

A = $\mu g/L$ CN^- read from standard curve.
B = mL of sample after preparation of colorimetric analysis (100 mL recommended).
C = mL of sample after distillation (250 mL recommended).
D = mL of original sample for distillation (500 mL recommended).
E = mL used for colorimetric analysis (50 mL recommended).

7.7 Titration Procedure

7.7.1 Transfer the gas scrubber solution or a suitable aliquot from the 250-mL volumetric flask to a 500-mL Erlenmeyer flask. Add 10-12 drops of the rhodanine indicator.

7.7.2 Titrate with standard 0.0192N silver nitrate to the first change in color from yellow to brownish-pink. The titration must be performed slowly with constant stirring. Titrate a water blank using the same amount of sodium hydroxide and indicator as in the sample. The analyst should be familiar with the endpoint of the titration and the amount of indicator to be used before actually titrating the samples. A 5-mL buret may be conveniently used to obtain a precise titration.

NOTE: The titration is based on the following reaction:

$$Ag^+ + 2CN \rightarrow [Ag(CN)_2]^-$$

When all of the cyanide has complexed and more silver nitrate is added, the excess silver combines with the rhodanine indicator to turn the solution yellow and then brownish-pink.

7.7.3 Calculation - If the titrimetric procedure is used, calculate concentration of CN^- in $\mu g/L$ in the original sample as follows:

$$CN^-(\mu g/L) = \frac{(A - B)}{C} \times D \times \frac{E}{F} \times \frac{2\ mole\ CN^-}{1\ eq.\ AgNO_3} \times \frac{26.02\ g\ CN^-}{1\ mole\ CN^-} \times \frac{1 \times 10^6 \mu g}{1\ g}$$

where:

A = mL of $AgNO_3$ for titration of sample.
B = mL of $AgNO_3$ for titration of blank.
C = mL of sample titrated (250 recommended).
D = actual normality of $AgNO_3$ (0.0192N recommended).
E = mL of sample after distillation (250 recommended).
F = mL of original sample before distillation (500 recommended).

8.0 QUALITY CONTROL

8.1 All quality control data should be maintained and available for easy reference or inspection.

8.2 Employ a minimum of one reagent blank per analytical batch or one in every 20 samples to determine if contamination or any memory effects are occurring.

8.3 Analyze check standards with every analytical batch of samples. If the standards are not within 15% of the expected value, then the samples must be reanalyzed.

8.4 Run one replicate sample for every 20 samples. A replicate sample is a sample brought through the entire sample preparation and analytical process. The CV of the replicates should be 20% or less. If this criterion is not met, the samples should be reanalyzed.

8.5 Run one matrix spiked sample every 20 samples to check the efficiency of sample distillation by adding cyanide from the working standard or intermediate standard to 500 mL of sample to ensure a concentration of approximately 40 μg/L. The matrix spiked sample is brought through the entire sample preparation and analytical process.

8.6 The method of standard additions shall be used for the analysis of all samples that suffer from matrix interferences such as samples which contain sulfides.

9.0 METHOD PERFORMANCE

9.1 The titration procedure using silver nitrate is used for measuring concentrations of cyanide exceeding 0.1 mg/L. The colorimetric procedure is used for concentrations below 1 mg/L of cyanide and is sensitive to about 0.02 mg/L.

9.2 EPA Method 335.2 (sample distillation with titration) reports that in a single laboratory using mixed industrial and domestic waste samples at concentrations of 0.06 to 0.62 mg/L CN^-, the standard deviations for precision were $\pm$ 0.005 to $\pm$ 0.094, respectively. In a single laboratory using mixed industrial and domestic waste samples at concentrations of 0.28 and 0.62 mg/L CN^-, recoveries (accuracy) were 85% and 102%, respectively.

9.3 In two additional studies using surface water, ground water, and landfill leachate samples, the titration procedure was further evaluated. The concentration range used in these studies was 0.5 to 10 mg/L cyanide. The detection limit was found to be 0.2 mg/L for both total and amenable cyanide determinations. The precision (CV) was 6.9 and 2.6 for total cyanide determinations and 18.6 and 9.1 for amenable cyanide determinations. The mean recoveries were 94% and 98.9% for total cyanide, and 86.7% and 97.4% for amenable cyanide.

10.0 REFERENCES

1. 1985 Annual Book of ASTM Standards, Vol. 11.01; "Standard Specification for Reagent Water"; ATSM: Philadelphia, PA, 1985,; D1193-77.

2. 1982 Annual Book ASTM Standards, Part 19; "Standard Test Methods for Cyanide in Water"; ASTM: Philadelphia, PA, 1982; 2036-82.

3. Bark, L.S.; Higson, H.G. Talanta 1964, 2, 471-479.

4. Britton, P.; Winter, J.; Kroner, R.C. "EPA Method Study 12, Cyanide in Water"; final report to the U.S. Environmental Protection Agency. National Technical Information Service: Springfield, VA, 1984; PB80-196674.

5. Casey, J.P.; Bright, J.W.; Helms, B.D. "Nitrosation Interference in Distillation Tests for Cyanide"; Gulf Coast Waste Disposal Authority: Houston, Texas.

6. Egekeze, J.O.; Oehne, F.W. J. Anal. Toxicology 1979, 3, 119.

7. Elly, C.T. J. Water Pollution Control Federation 1968, 40, 848-856.

8. Fuller, W. Cyanide in the Environment; Van Zyl, D., Ed.; Proceedings of Symposium; December, 1984.

9. Gottfried, G.J. "Precision, Accuracy, and MDL Statements for EPA Methods 9010, 9030, 9060, 7520, 7521,7550, 7551, 7910, and 7911"; final report to the U.S. Environmental Protection Agency. Environmental Monitoring and Support Laboratory. Biospheric: Cincinnati, OH, 1984.

10. Methods for Chemical Analysis of Water and Wastes; U.S. Environmental Protection Agency. Office of Research and Development. Environmental Monitoring and Support Laboratory. ORD Publication Offices of Center for Environmental Research Information: Cincinnati, OH, 1983; EPA-600/4-79-020.

11. Rohrbough, W.G.; et al. Reagent Chemicals, American Chemical Society Specifications, 7th ed.; American Chemical Society: Washington, DC, 1986.

12. Standard Methods for the Examination of Water and Wastewater, 16th ed.; Greenberg, A.E.; Trussell, R.R.; Clesceri, L.S., Eds.; American Water Works Association, Water Pollution Control Federation, American Public Health Association: Washington, DC, 1985.

13. Umaña, M.; Beach, J.; Sheldon, L. "Revisions to Method 9010"; final report to the U.S. Environmental Protection Agency. Office of Solid Waste. Research Triangle Institute: Research Triangle Park, NC, 1986.

14. Umaña, M.; Sheldon, L. "Interim Report: Literature Review"; interim report to the U.S. Environmental Protection Agency. Office of Solid Waste. Research Triangle Institute: Research Triangle Park, NC, 1986.

FIGURE 1.
APPARATUS FOR CYANIDE DISTILLATION

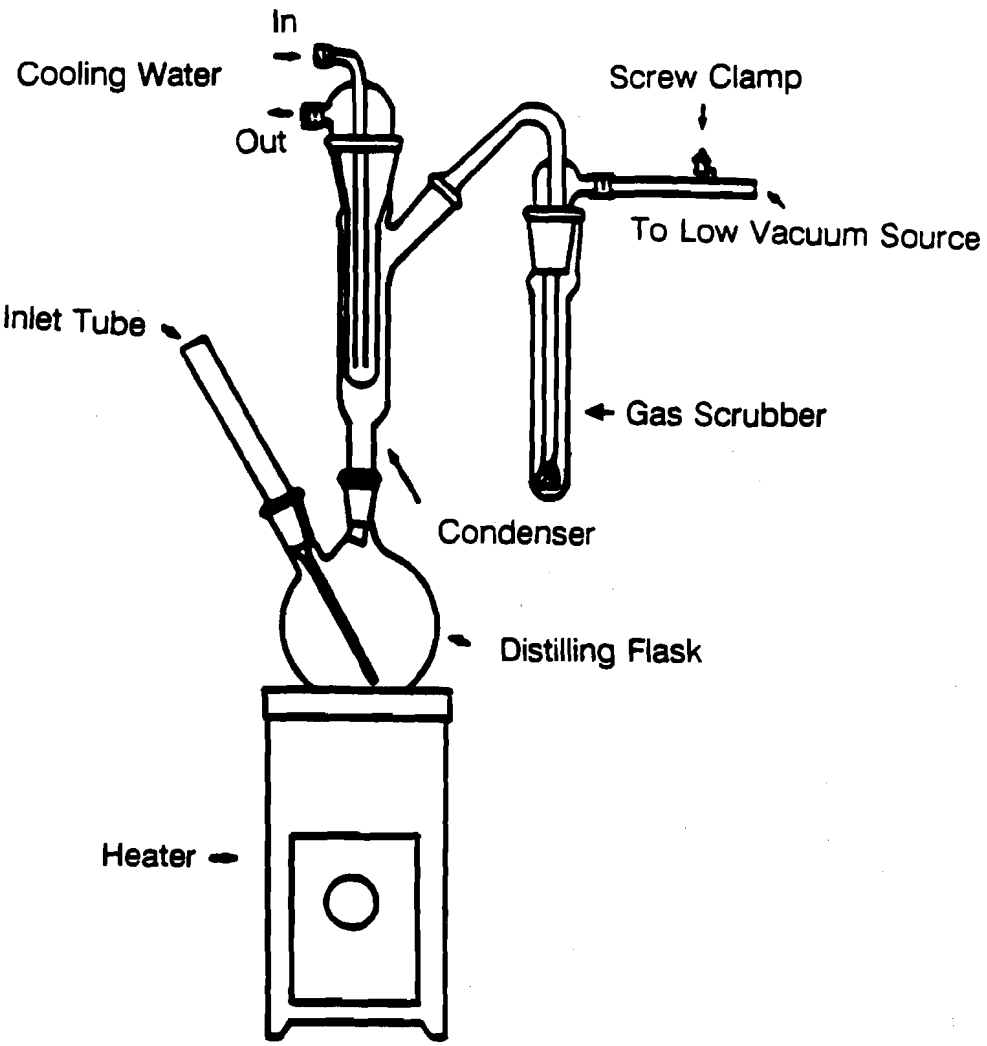

FIGURE 2.
APPARATUS FOR CYANIDE DISTILLATION

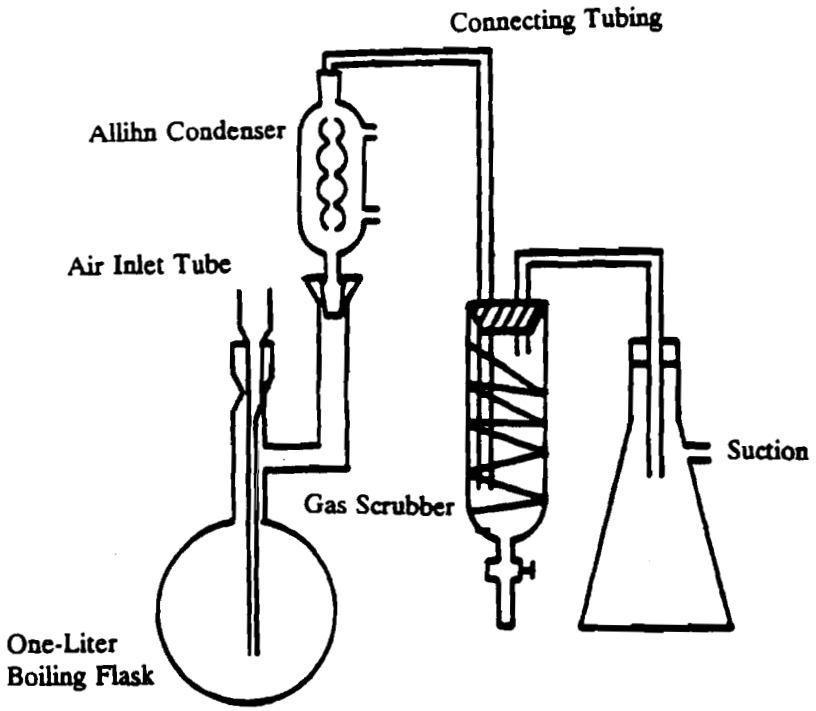

METHOD 9010A

TOTAL AND AMENABLE CYANIDE

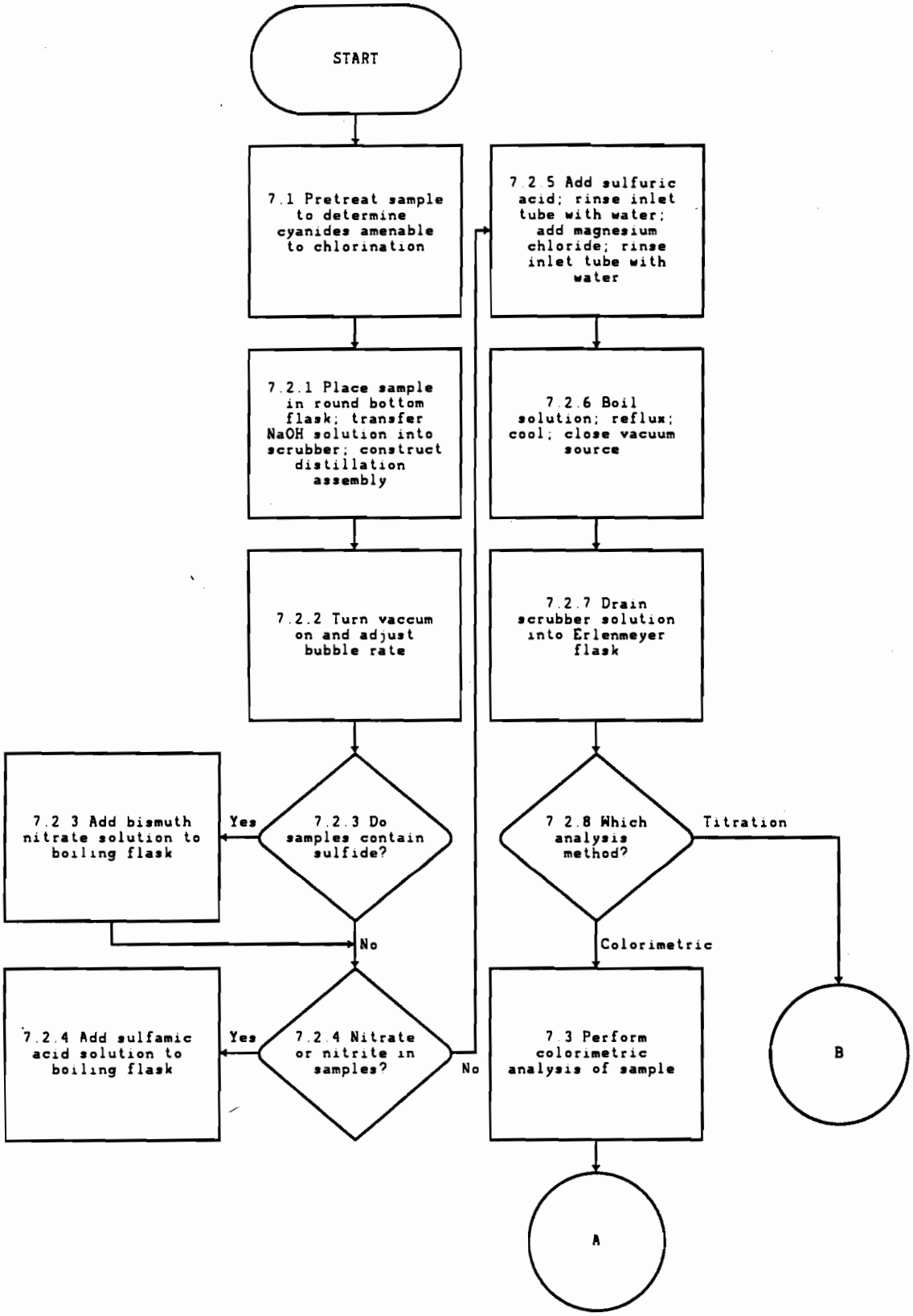

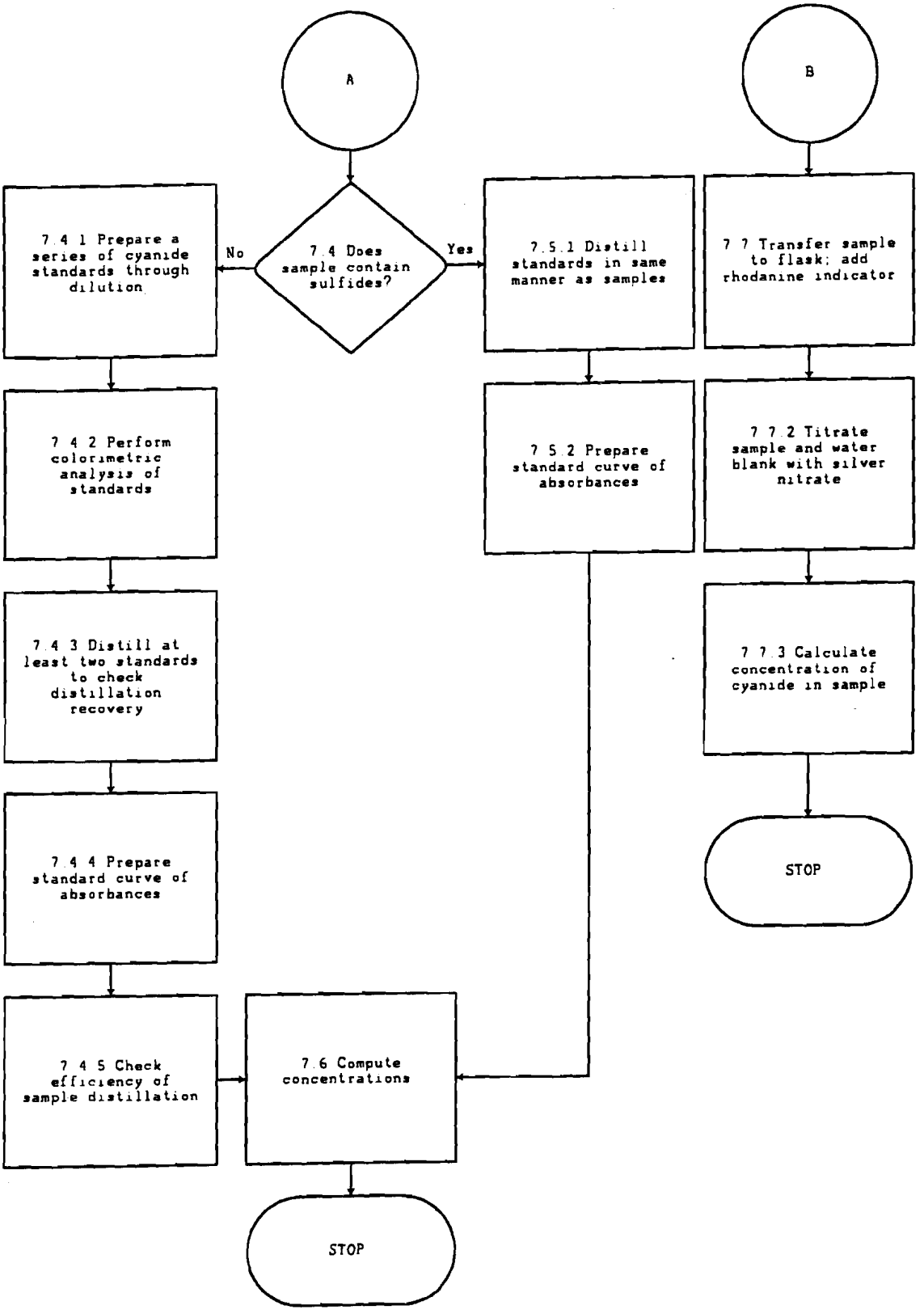
A
B
7.4 Does sample contain sulfides?
No
Yes
7.4.1 Prepare a series of cyanide standards through dilution
7.4.2 Perform colorimetric analysis of standards
7.4.3 Distill at least two standards to check distillation recovery
7.4.4 Prepare standard curve of absorbances
7.4.5 Check efficiency of sample distillation
7.5.1 Distill standards in same manner as samples
7.5.2 Prepare standard curve of absorbances
7.7 Transfer sample to flask; add rhodanine indicator
7.7.2 Titrate sample and water blank with silver nitrate
7.7.3 Calculate concentration of cyanide in sample
STOP
7.6 Compute concentrations
STOP

METHOD 9012

TOTAL AND AMENABLE CYANIDE (COLORIMETRIC, AUTOMATED UV)

1.0 SCOPE AND APPLICATION

1.1 Method 9012 is used to determine the concentration of inorganic cyanide in an aqueous waste or leachate. The method detects inorganic cyanides that are present as either simple soluble salts or complex radicals. It is used to determine values for both total cyanide and cyanide amenable to chlorination. Method 9012 is not intended to determine if a waste is hazardous by the characteristic of reactivity.

2.0 SUMMARY OF METHOD

2.1 The cyanide, as hydrocyanic acid (HCN), is released by refluxing the sample with strong acid and distillation of the HCN into an absorber-scrubber containing sodium hydroxide solution. The cyanide ion in the absorbing solution is then determined by automated UV colorimetry.

2.2 In the colorimetric measurement, the cyanide is converted to cyanogen chloride (CNCl) by reaction with Chloramine-T at a pH less than 8 without hydrolyzing to the cyanate. After the reaction is complete, color is formed on the addition of pyridine-barbituric acid reagent. The concentration of NaOH must be the same in the standards, the scrubber solutions, and any dilution of the original scrubber solution to obtain colors of comparable intensity.

3.0 INTERFERENCES

3.1 Interferences are eliminated or reduced by procedures described in Paragraphs 7.2.3, 7.2.4, and 7.2.5.

3.2 Sulfides adversely affect the colorimetric procedures. Samples that contain hydrogen sulfide, metal sulfides, or other compounds that may produce hydrogen sulfide during the distillation should be treated by addition of bismuth nitrate prior to distillation as described in Paragraph 7.2.3.

3.3 High results may be obtained for samples that contain nitrate and/or nitrite. During the distillation, nitrate and nitrite will form nitrous acid, which will react with some organic compounds to form oximes. These compounds will decompose under test conditions to generate HCN. The possible interference of nitrate and nitrite is eliminated by pretreatment with sulfamic acid.

4.0 APPARATUS AND MATERIALS

4.1 Reflux distillation apparatus: Such as shown in Figure 1 or 2. The boiling flask should be of 1-liter size with inlet tube and provision for condenser. The gas absorber is a Fisher-Milligan scrubber (Fisher Catalog #07-513) or equivalent.

4.2 Potassium iodide-starch test paper.

4.3 Automated continuous-flow analytical instrument with:

4.3.1 Sampler.
4.3.2 Manifold with UV digestor.
4.3.3 Proportioning pump.
4.3.4 Heating bath with distillation coil.
4.3.5 Distillation head.
4.3.6 Colorimeter equipped with a 15-mm flowcell and 570 nm filter.
4.3.7 Recorder.

5.0 REAGENTS

5.1 ASTM Type II water (ASTM D1193): Water should be monitored for impurities.

5.2 Sodium hydroxide solution, 1.25 N: Dissolve 50 g of NaOH in Type II water and dilute to 1 liter with Type II water.

5.3 Bismuth nitrate solution: Dissolve 30.0 g of $Bi(NO_3)_3$ in 100 mL of Type II water. While stirring, add 250 mL of glacial acetic acid. Stir until dissolved. Dilute to 1 liter with Type II water.

5.4 Sulfuric acid, 1:1: Slowly add 500 mL of concentrated H_2SO_4 to 500 mL of Type II water.
CAUTION: this is an exothermic reaction.

5.5 Sodium dihydrogenphosphate, 1 M: Dissolve 138 g of $NaH_2PO_4 \cdot H_2O$ in 1 liter of Type II water.

5.6 Stock cyanide solution: Dissolve 2.51 g of KCN and 2 g KOH in 900 mL of Type II water. Standardize with 0.0192 N $AgNO_3$. Dilute to appropriate concentration so that 1 mL = 1 mg CN.

5.7 Intermediate standard cyanide solution: Dilute 100.0 mL of stock (1 mL = 1 mg CN) to 1,000 mL with Type II water (1 mL = 100 ug CN).

5.8 Working standard cyanide solution: Prepare fresh daily by diluting 100.0 mL of intermediate cyanide solution to 1,000 mL with Type II water (1 mL = 10.0 ug CN). Store in a glass-stoppered bottle.

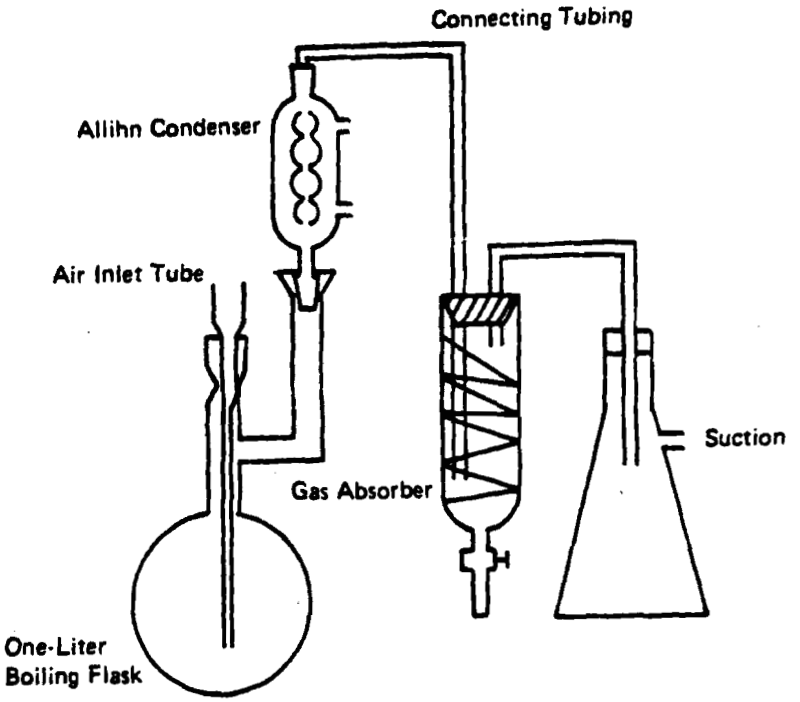

Figure 1. Apparatus for cyanide distillation.

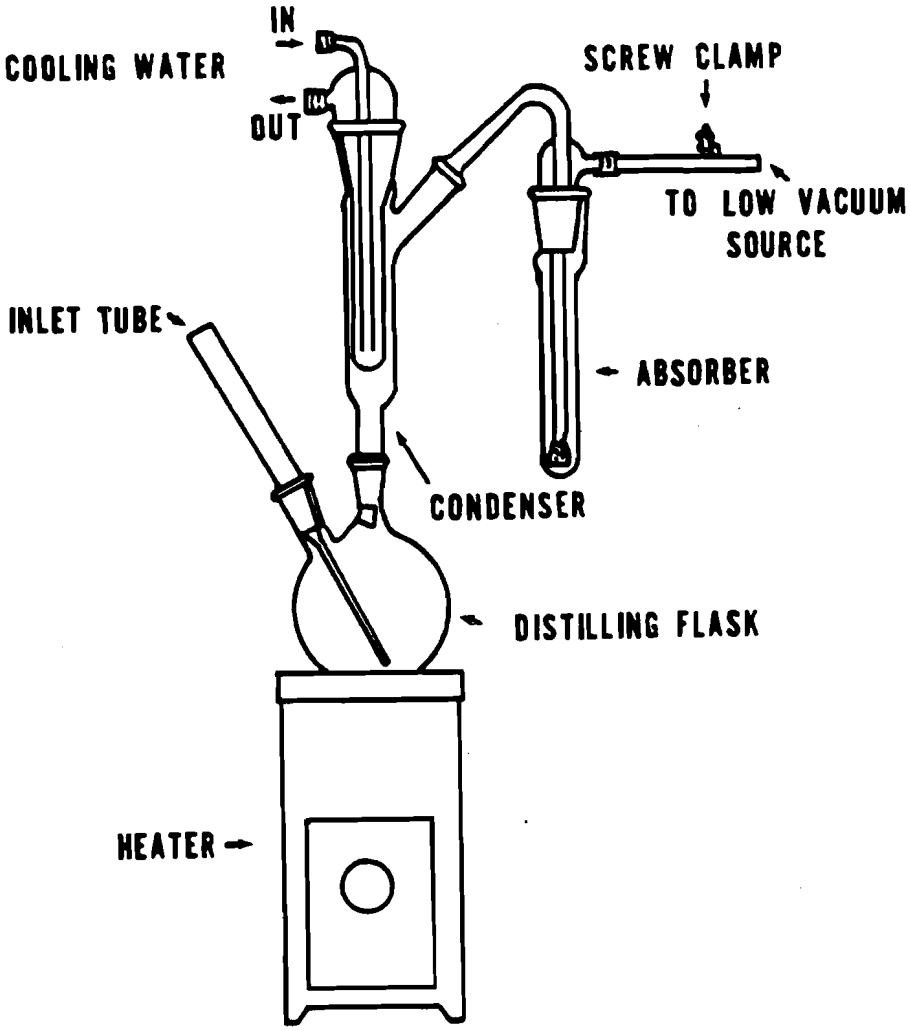

Figure 2. Cyanide distillation apparatus.

5.9 Magnesium chloride solution: Weigh 510 g of $MgCl_2 \cdot 6H_2O$ into a 1,000-mL flask, dissolve, and dilute to 1 liter with Type II water.

5.10 Sulfamic acid solution: Dissolve 40 g of sulfamic acid in Type II water. Dilute to 1 liter.

5.11 Calcium hypochlorite solution: Dissolve 5 g of calcium hypochlorite [$Ca(OCl)_2$] in 100 mL of Type II water.

5.12 Reagents for automated colorimetric determination:

5.12.1 Pyridine-barbituric acid reagent: Place 15 g of barbituric acid in a 250-mL volumetric flask, add just enough Type II water to wash the sides of the flask, and wet the barbituric acid. Add 75 mL of pyridine and mix. Add 15 mL of concentrated HCl, mix, and cool to room temperature. Dilute to 250 mL with Type II water and mix. This reagent is stable for approximately six months if stored in a cool, dark place.

5.12.2 Chloramine-T solution: Dissolve 2.0 g of white, water soluble chloramine-T in 500 mL of Type II water and refrigerate until ready to use.

5.12.3 Sodium hydroxide, 1 N: Dissolve 40 g of NaOH in Type II water, and dilute to 1 liter.

5.12.4 All working standards should contain 2 mL of 1 N NaOH (Paragraph 5.12.3) per 100 mL.

5.12.5 Dilution water and receptacle wash water (NaOH, 0.25 N): Dissolve 10.0 g NaOH in 500 mL of Type II water. Dilute to 1 liter.

5.13 Ascorbic acid: Crystals.

5.14 Phosphate buffer, pH 5.2: Dissolve 13.6 g of potassium dihydrogen phosphate and 0.28 g of disodium phosphate in 900 mL of Type II water and dilute to 1 liter.

6.0 SAMPLE COLLECTION, PRESERVATION, AND HANDLING

6.1 All samples must have been collected using a sampling plan that addresses the considerations discussed in Chapter Nine of this manual.

6.2 Samples should be collected in plastic or glass bottles of 1-liter size or larger. All bottles must be thoroughly cleaned and thoroughly rinsed to remove soluble materials from containers.

6.3 Oxidizing agents such as chlorine decompose most cyanides. To determine whether oxidizing agents are present, test a drop of the sample with acidified potassium iodide (KI)-starch test paper at the time the sample is collected; a blue color indicates the need for treatment. Add ascorbic acid a

few crystals at a time until a drop of sample produces no color on the indicator. Then add an additional 0.6 g of ascorbic acid for each liter of water.

6.4 Samples must be preserved by addition of 10 N sodium hydroxide until sample pH is greater than or equal to 12 at the time of collection.

6.5 Samples should be refrigerated at 4°C, when possible, and analyzed as soon as possible.

7.0 PROCEDURE

7.1 Pretreatment for cyanides amenable to chlorination:

7.1.1 Two sample aliquots are required to determine cyanides amenable to chlorination. To one 500-mL aliquot, or to a volume diluted to 500 mL, add calcium hypochlorite solution (Paragraph 5.11) dropwise while agitating and maintaining the pH between 11 and 12 with sodium hydroxide (Paragraph 5.2).

CAUTION: The initial reaction product of alkaline chlorination is the very toxic gas cyanogen chloride; therefore, it is recommended that this reaction be performed in a hood. For convenience, the sample may be agitated in a 1-liter beaker by means of a magnetic stirring device.

7.1.2 Test for residual chlorine with KI-starch paper (Paragraph 4.4) and maintain this excess for 1 hr, continuing agitation. A distinct blue color on the test paper indicates a sufficient chlorine level. If necessary, add additional hypochlorite solution.

7.1.3 After 1 hr, add 0.5 g portions of ascorbic acid until KI-starch paper shows no residual chlorine. Add an additional 0.5 g of ascorbic acid to ensure the presence of excess reducing agent.

7.1.4 Test for total cyanide in both the chlorinated and unchlorinated aliquots. (The difference of total cyanide in the chlorinated and unchlorinated aliquots is the cyanide amenable to chlorination.)

7.2 Distillation Procedure:

7.2.1 Place 500 mL of sample, or an aliquot diluted to 500 mL, in the 1-liter boiling flask. Pipet 50 mL of sodium hydroxide (Paragraph 5.2) into the absorbing tube. If the apparatus in Figure 1 is used, add Type II water until the spiral is covered. Connect the boiling flask, condenser, absorber, and trap in the train (Figure 1 or 2).

7.2.2 By adjusting the vacuum source, start a slow stream of air entering the boiling flask so that approximately two bubbles of air per second enter the flask through the air inlet tube.

7.2.3 Use lead acetate paper to check the sample for the presence of sulfide. A positive test is indicated by a black color on the paper. If positive, treat the sample by adding 50 mL of bismuth nitrate solution (Paragraph 5.3) through the air inlet tube after the air rate is set. Mix for 3 min prior to addition of H_2SO_4.

7.2.4 If samples are suspected to contain NO_3 and/or NO_2, add 50 mL of sulfamic acid solution (Paragraph 5.10) after the air rate is set through the air inlet tube. Mix for 3 min prior to addition of H_2SO_4.

7.2.5 Slowly add 50 mL 1:1 H_2SO_4 (Paragraph 5.4) through the air inlet tube. Rinse the tube with Type II water and allow the airflow to mix the flask contents for 3 min. Pour 20 mL of magnesium chloride (Paragraph 5.9) into the air inlet and wash down with a stream of water.

7.2.6 Heat the solution to boiling. Reflux for 1 hr. Turn off heat and continue the airflow for at least 15 min. After cooling the boiling flask, disconnect absorber and close off the vacuum source.

7.2.7 Drain the solution from the absorber into a 250-mL volumetric flask. Wash the absorber with Type II water and add the washings to the flask. Dilute to the mark with Type II water.

7.3 Automated colorimetric determination:

7.3.1 Set up the manifold in a hood or a well-ventilated area as shown in Figure 3.

7.3.2 Allow colorimeter and recorder to warm up for 30 min. Run a baseline with all reagents, feeding Type II water through the sample line.

7.3.3 Place appropriate standards in the sampler in order of decreasing concentration. Complete loading of the sampler tray with unknown samples.

7.3.4 When the baseline becomes steady, begin the analysis.

7.4 Standard curve for samples without sulfide:

7.4.1 Prepare a series of standards by pipetting suitable volumes of standard solution (Paragraph 5.8) into 250-mL volumetric flasks. To each standard add 50 mL of 1.25 N sodium hydroxide and dilute to 250 mL with Type II water. Prepare as follows:

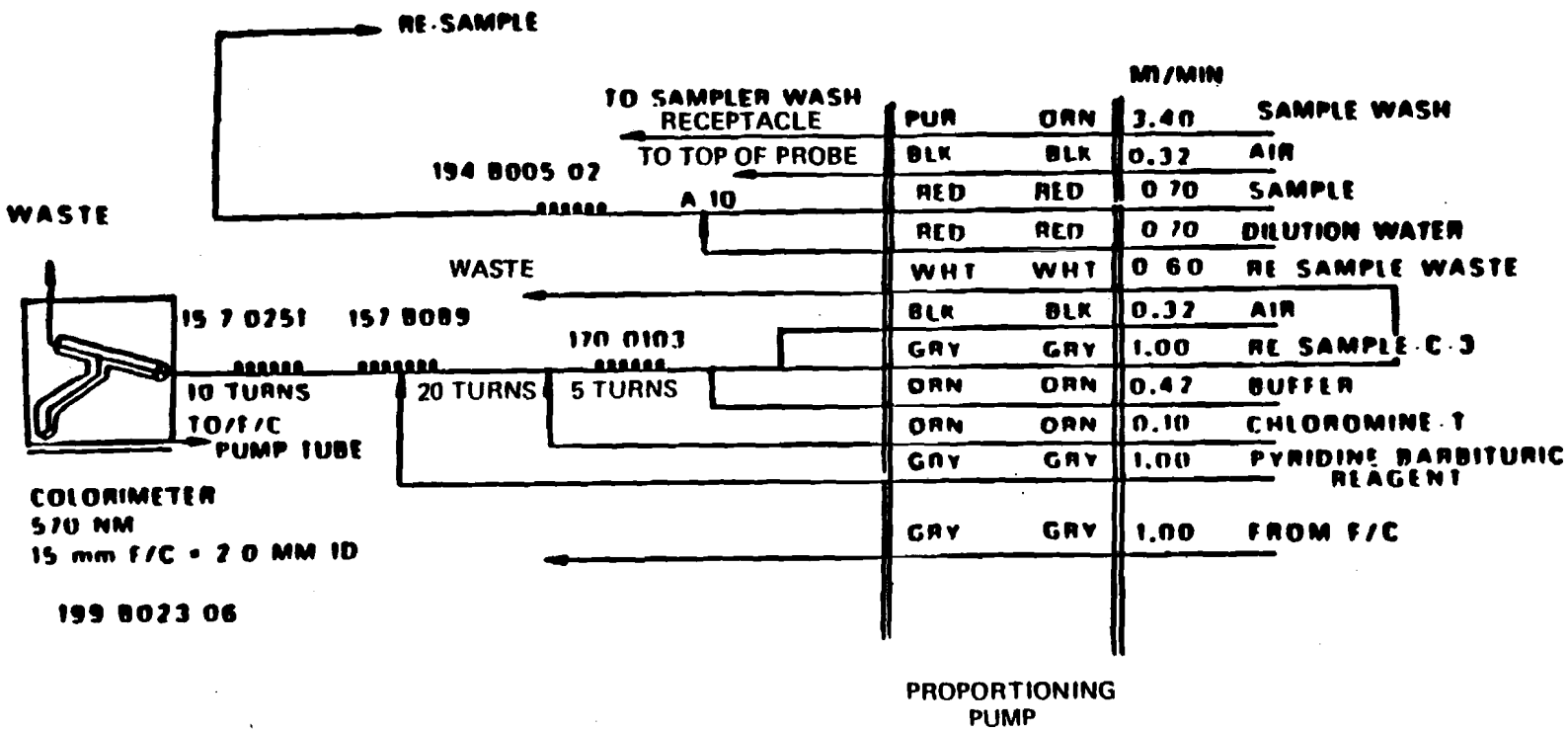

Figure 3. Cyanide manifold AA11.

mL of Working Standard Solution (1 mL = 10 ug CN)	Concentration (ug CN/250 mL)
0	BLANK
1.0	10
2.0	20
5.0	50
10.0	100
15.0	150
20.0	200

7.4.2 It is not imperative that all standards be distilled in the same manner as the samples. It is recommended that at least two standards (a high and a low) be distilled and compared with similar values on the curve to ensure that the distillation technique is reliable. If distilled standards do not agree within ± 10% of the undistilled standards, the analyst should find the cause of the apparent error before proceeding.

7.4.3 Prepare a standard curve by plotting absorbances of standards vs. cyanide concentrations.

7.4.4 To check the efficiency of the sample distillation, add an increment of cyanide from either the intermediate standard (Paragraph 5.7) or the working standard (Paragraph 5.8) to 500 mL of sample to ensure a level of 20 ug/L. Proceed with the analysis as in Paragraph 7.2.1.

7.5 Standard curve for samples with sulfide:

7.5.1 All standards must be distilled in the same manner as the samples. A minimum of 3 standards shall be distilled.

7.5.2 Prepare a standard curve by plotting absorbances of standards vs. cyanide concentration.

7.6 Calculation: Prepare a standard curve by plotting peak heights of standards against their concentration values. Compute concentrations of samples by comparing sample peak heights with the standard curve.

8.0 QUALITY CONTROL

8.1 All quality control data should be maintained and available for easy reference or inspection.

8.2 Employ a minimum of one blank per sample batch to determine if contamination or any memory effects are occurring.

8.3 Verify calibration with an independently prepared check standard every 15 samples.

8.4 Run one spike duplicate sample for every 10 samples. A duplicate sample is a sample brought through the whole sample preparation process.

8.5 The method of standard additions shall be used for the analysis of all samples that suffer from matrix interferences.

9.0 METHOD PERFORMANCE

9.1 Precision and accuracy data are not available at this time.

10.0 REFERENCES

1. Annual Book of ASTM Standards, Part 31, "Water," Standard D2036-75, Method B, p. 505 (1976).

2. Goulden, P.D., B.K. Afghan, and P. Brooksbank, Determination of Nanogram Quantities of Simple and Complex Cyanides in Water, Anal. Chem., 44(11), pp. 1845-49 (1972).

3. Standard Methods for the Examination of Water and Wastewater, 14th ed., pp. 376 and 370, Method 413F and D (1975).

4. Technicon AutoAnalyzer II Methodology, Industrial Method No. 315-74 WCUV Digestion and Distillation, Technicon Industrial Systems, Tarrytown, New York, 10591 (1974).

METHOD 9012

TOTAL AND AMENABLE CYANIDE (COLORIMETRIC, AUTOMATED UV)

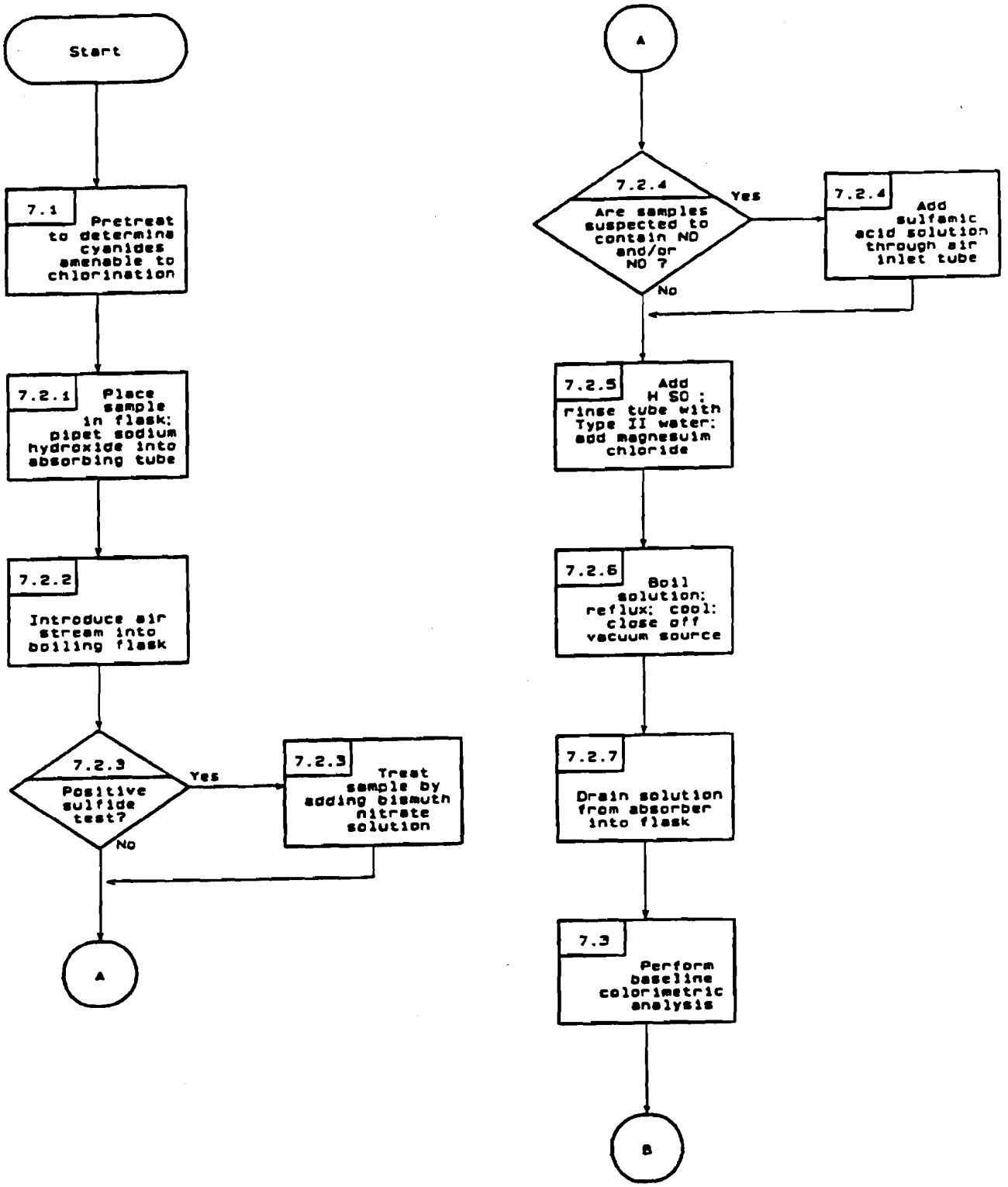

Revision 0
Date September 1986

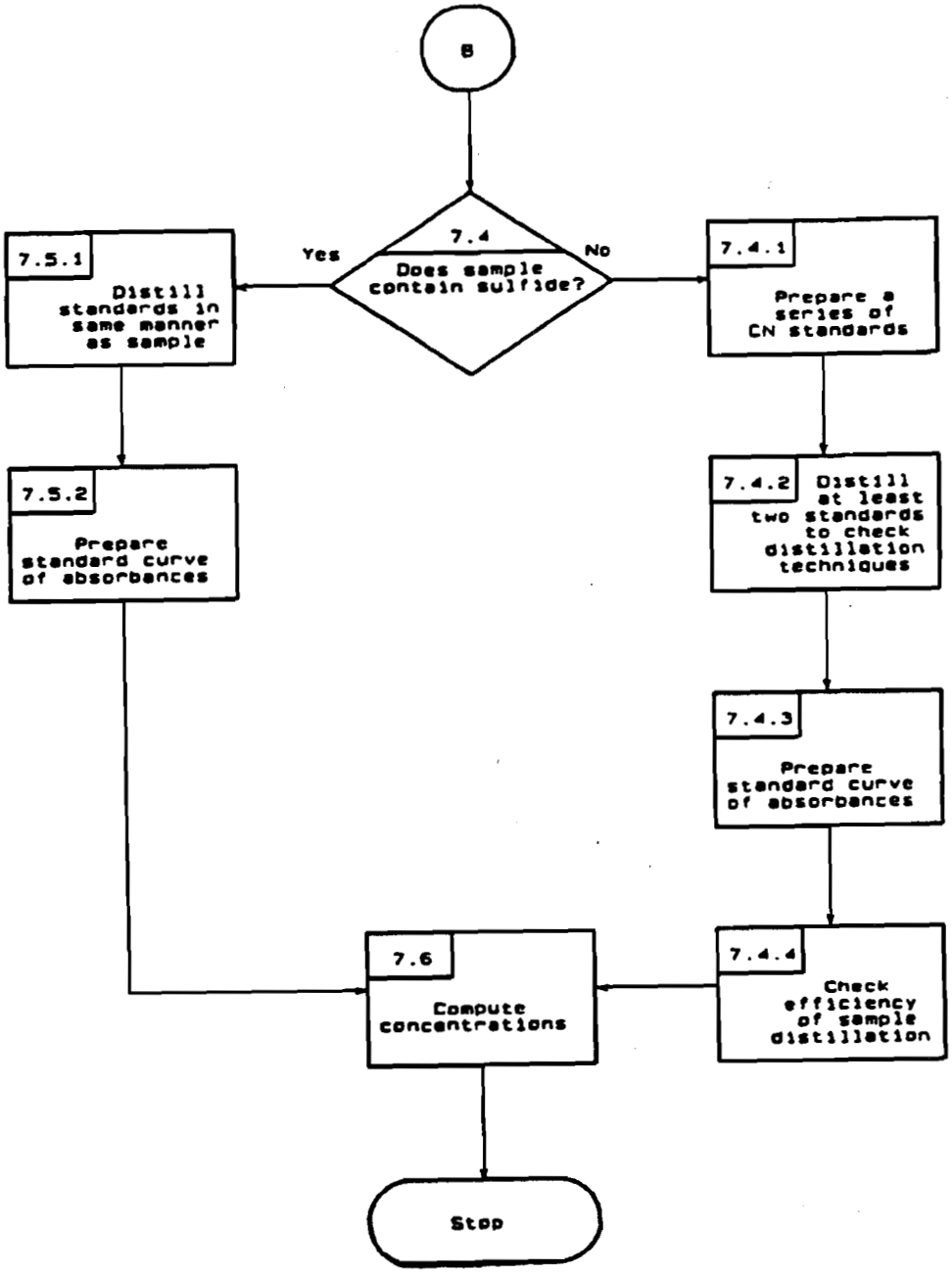
B
7.4
Does sample contain sulfide?
Yes
No
7.5.1
Distill standards in same manner as sample
7.5.2
Prepare standard curve of absorbances
7.4.1
Prepare a series of CN standards
7.4.2
Distill at least two standards to check distillation techniques
7.4.3
Prepare standard curve of absorbances
7.4.4
Check efficiency of sample distillation
7.6
Compute concentrations
Stop

METHOD 9013
(APPENDIX TO METHOD 9010)

CYANIDE EXTRACTION PROCEDURE FOR SOLIDS AND OILS

1.0 SCOPE AND APPLICATION

1.1 The extraction procedure described in this method is designed for the extraction of soluble cyanides from solid and oil wastes. The method is applicable to oil, solid, and multiphasic samples. This method is not applicable to samples containing insoluble cyanide compounds.

2.0 SUMMARY OF METHOD

2.1 If the waste sample contains so much solid, or solids of such a size as to interfere with agitation and homogenization of the sample mixture in the distillation flask, or so much oil or grease as to interfere with the formation of a homogeneous emulsion, the sample may be extracted with water at pH 10 or greater, and the extract distilled and analyzed by Method 9010. Samples that contain free water are filtered and separated into an aqueous component and a combined oil and solid component. The nonaqueous component may then be extracted, and an aliquot of the extract combined with an aliquot of the filtrate in proportion to the composition of the sample. Alternatively, the components may be analyzed separately, and cyanide levels reported for each component. However, if the sample solids are known to contain sufficient levels of cyanide (about 50 μg/g) as to be well above the limit of detection, the extraction step may be deleted and the solids analyzed directly by Method 9010. This can be accomplished by diluting a small aliquot of the waste solid (1-10 g) in 500 mL water in the distillation flask and suspending the slurry during distillation with a magnetic stir-bar.

3.0 INTERFERENCES

3.1 Potential interferences that may be encountered during analysis are discussed in Method 9010.

4.0 APPARATUS AND MATERIALS

4.1 Extractor - Any suitable device that sufficiently agitates a sealed container of one liter volume or greater. For the purpose of this analysis, agitation is sufficient when:

1. All sample surfaces are continuously brought into contact with extraction fluid, and

2. The agitation prevents stratification of the sample and fluid.

4.2 Buchner funnel apparatus

4.2.1 Buchner funnel - 500-mL capacity, with 1-liter vacuum filtration flask.

4.2.2 Glass wool - Suitable for filtering, 0.8 m diameter such as Corning Pyrex 3950.

4.2.3 Vacuum source - Preferably a water driven aspirator. A valve or stopcock to release vacuum is required.

4.3 Top-loading balance - capable of weighing 0.1 g.

4.4 Separatory funnels - 500 mL.

5.0 REAGENTS

5.1 Reagent grade chemicals shall be used in all tests. Unless otherwise indicated, it is intended that all reagents shall conform to the specifications of the Committee on Analytical Reagents of the American Chemical Society, where such specifications are available. Other grades may be used, provided it is first ascertained that the reagent is of sufficiently high purity to permit its use without lessening the accuracy of the determination.

5.2 Reagent water. All references to water in this method refer to reagent water, as defined in Chapter One.

5.3 Sodium hydroxide (50% w/v), NaOH. Commercially available.

5.4 n-Hexane, C_6H_{14}.

6.0 SAMPLE COLLECTION, PRESERVATION, AND HANDLING

6.1 All samples must be collected using a plan that addresses the considerations discussed in Chapter 4 of this manual. See Section 6.0 of Method 9010 for additional guidance.

7.0 PROCEDURE

7.1 If the waste does not contain any free aqueous phase, go to Step 7.5. If the sample is a homogeneous fluid or slurry that does not separate or settle in the distillation flask when using a Teflon coated magnetic stirring bar but mixes so that the solids are entirely suspended, then the sample may be analyzed by Method 9010 without an extraction step.

7.2 Assemble Buchner funnel apparatus. Unroll glass filtering fiber and fold the fiber over itself several times to make a pad about 1 cm thick when lightly compressed. Cut the pad to fit the Buchner funnel. Weigh the pad, then place it in the funnel. Turn the aspirator on and wet the pad with a known amount of water.

7.3 Transfer the sample to the Buchner funnel in small aliquots, first decanting the fluid. Rinse the sample container with known amounts of water and add the rinses to the Buchner funnel. When no free water remains in the funnel, slowly open the stopcock to allow air to enter the vacuum flask. A small amount of sediment may have passed through the glass fiber pad. This will not interfere with the analysis.

7.4 Transfer the solid and the glass fiber pad to a tared weighing dish. Since most greases and oils will not pass through the fiber pad, solids, oils, and greases will be extracted together. If the filtrate includes an oil phase, transfer the filtrate to a separatory funnel. Collect and measure the volume of the aqueous phase. Transfer the oil phase to the weighing dish with the solid.

7.5 Weigh the dish containing solid, oil (if any), and filter pad. Subtract the weight of the dry filter pad. Calculate the net volume of water present in the original sample by subtracting the total volume of rinses used from the measured volume of the filtrate.

7.6 Place the following in a 1-liter wide-mouthed bottle:

500 mL water
5 mL 50% w/v NaOH
50 mL n-Hexane (if a heavy grease is present)

If the weight of the solids (Step 7.5) is greater than 25 g, weigh out a representative aliquot of 25 g and add it to the bottle; otherwise add all of the solids. Cap the bottle.

7.7 The pH of the extract must be maintained above 10 throughout the extraction step and subsequent filtration. Since some samples may release acid, the pH must be monitored as follows. Shake the extraction bottle and after one minute, check the pH. If the pH is below 12, add 50% NaOH in 5 mL increments until it is at least 12. Recap the bottle, and repeat the procedure until the pH does not drop.

7.8 Place the bottle or bottles in the tumbler, making sure there is enough foam insulation to cushion the bottle. Turn the tumbler on and allow the extraction to run for about 16 hours.

7.9 Prepare a Buchner funnel apparatus as in Step 7.2 with a glass fiber pad filter.

7.10 Decant the extract to the Buchner funnel. Full recovery of the extract is not necessary.

7.11 If the extract contains an oil phase, separate the aqueous phase using a separatory funnel. Neither the separation nor the filtration are critical, but are necessary to be able to measure the volume of the aliquot of the aqueous extract analyzed. Small amounts of suspended solids and oil emulsions will not interfere.

7.12 At this point, an aliquot of the filtrate of the original sample may be combined with an aliquot of the extract in a proportion representative of the sample. Alternatively, they may be distilled and analyzed separately and concentrations given for each phase. This is described by the following equation:

$$\frac{\text{Liquid Sample Aliquot(mL)}}{\text{Extract Aliquot(mL)}} = \frac{\text{Solid Extracted(g)}^{a}}{\text{Total Solid(g)}^{b}} \times \frac{\text{Total Sample Filtrate(mL)}^{c}}{\text{Total Extraction Fluid(mL)}^{d}}$$

[a]From Step 7.6. Weight of solid sample used for extraction.

[b]From Step 7.5. Weight of solids and oil phase with the dry weight of filter and tared dish subtracted.

[c]Includes volume of all rinses added to the filtrate (Steps 7.2 and 7.3).

[d]500 mL water plus total volume of NaOH solution. Does not include hexane, which is subsequently removed (Step 7.11).

Alternatively, the aliquots may be distilled and analyzed separately, concentrations for each phase reported separately, and the amounts of each phase present in the sample reported separately.

8.0 QUALITY CONTROL

8.1 Refer to Method 9010.

9.0 METHOD PERFORMANCE

9.1 In a single laboratory study, recoveries of 60 to 90% are reported for solids and 88 to 92% for oils. The reported CVs are less than 13.

10.0 REFERENCES

10.1 Refer to Method 9010.

METHOD 9013
(APPENDIX TO METHOD 9010)

CYANIDE EXTRACTION PROCEDURE FOR SOLIDS AND OILS

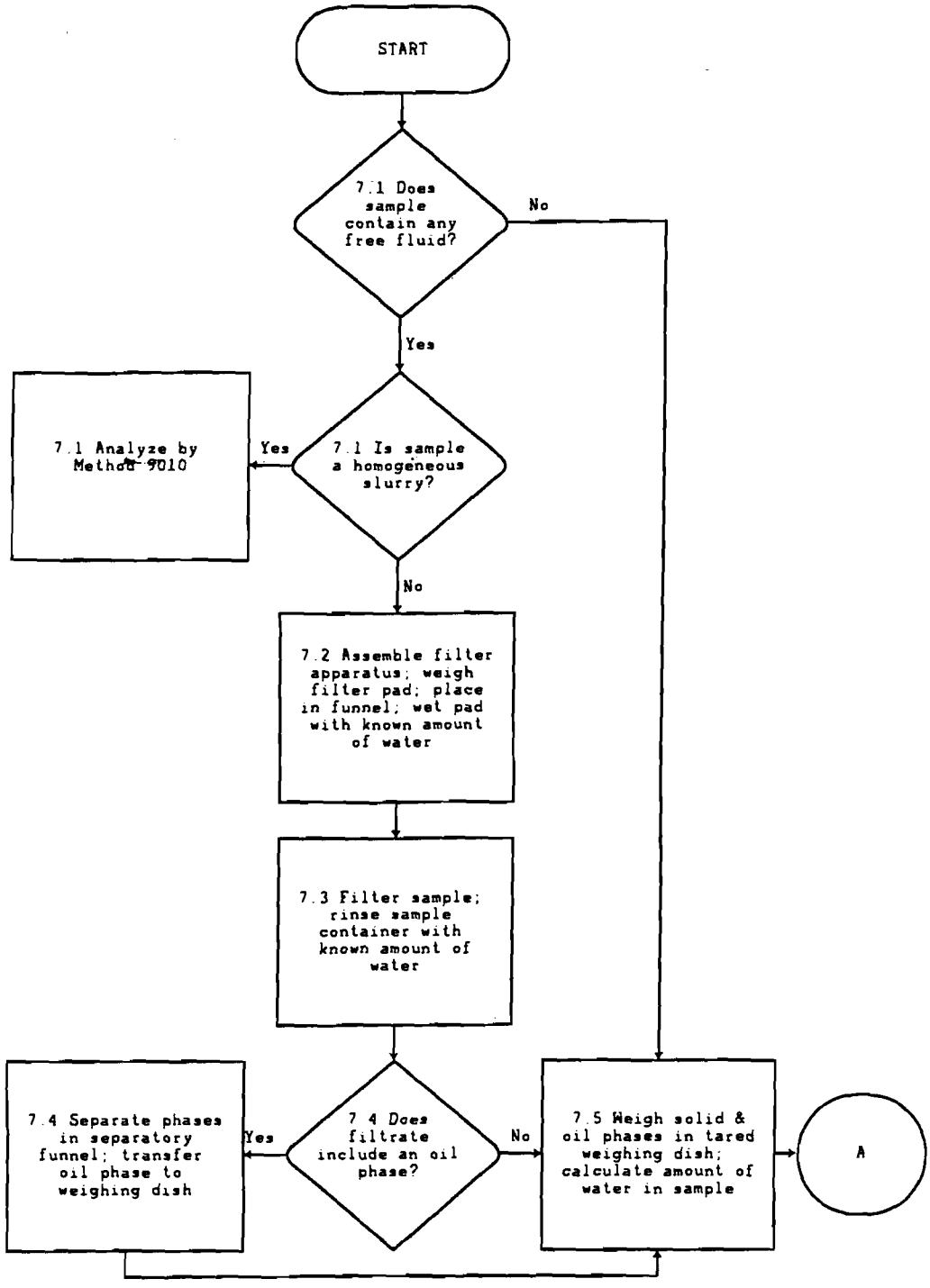

METHOD 9013
(APPENDIX TO METHOD 9010)

CYANIDE EXTRACTION PROCEDURE FOR SOLIDS AND OILS (CONTINUED)

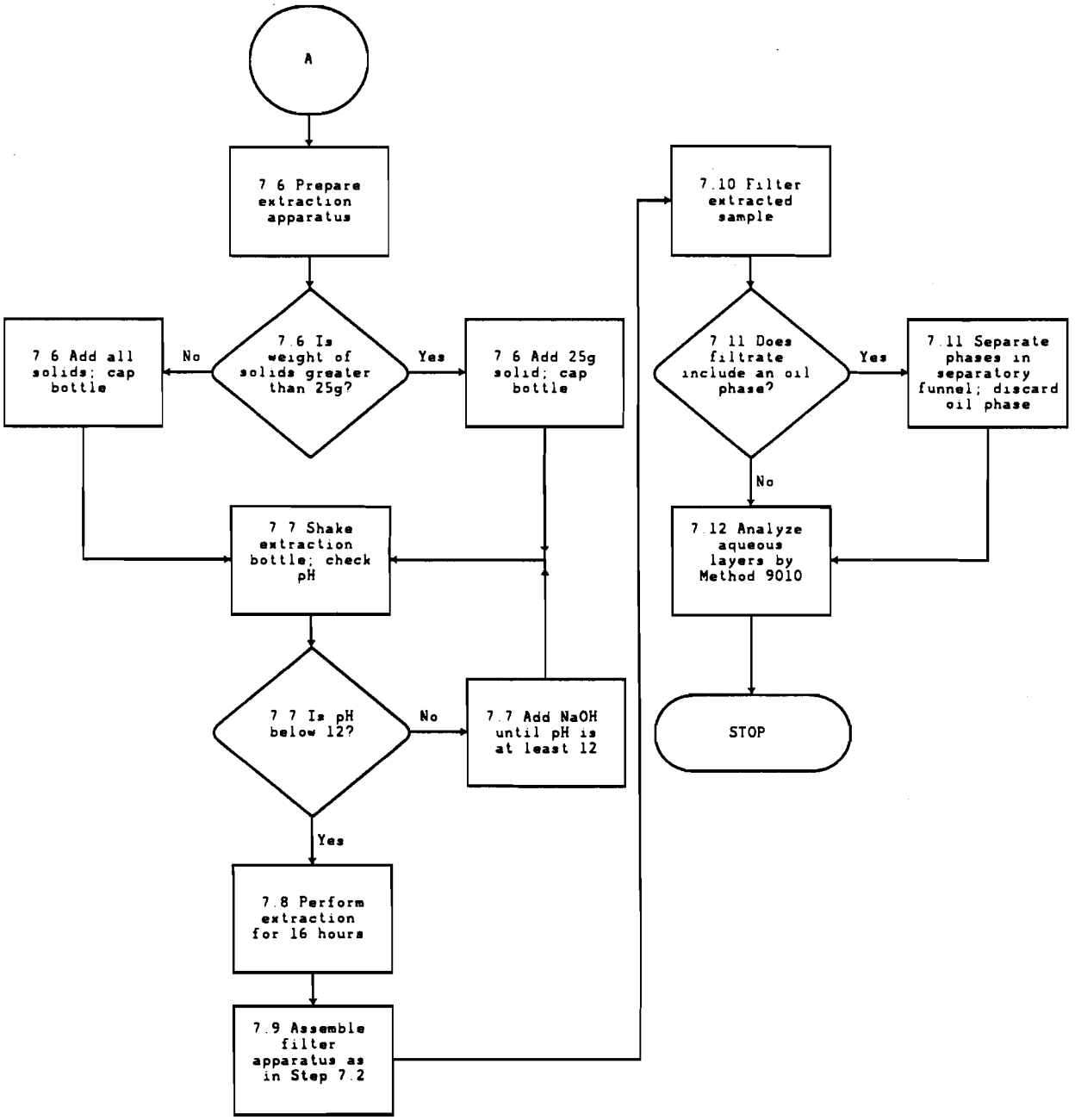

METHOD 9020B

TOTAL ORGANIC HALIDES (TOX)

1.0 SCOPE AND APPLICATION

1.1 Method 9020 determines Total Organic Halides (TOX) as chloride in drinking water and ground waters. The method uses carbon adsorption with a microcoulometric-titration detector.

1.2 Method 9020 detects all organic halides containing chlorine, bromine, and iodine that are adsorbed by granular activated carbon under the conditions of the method. Fluorine-containing species are not determined by this method.

1.3 Method 9020 is applicable to samples whose inorganic-halide concentration does not exceed the organic-halide concentration by more than 20,000 times.

1.4 Method 9020 does not measure TOX of compounds adsorbed to undissolved solids.

1.5 Method 9020 is restricted to use by, or under the supervision of, analysts experienced in the operation of a pyrolysis/microcoulometer and in the interpretation of the results.

1.6 This method is provided as a recommended procedure. It may be used as a reference for comparing the suitability of other methods thought to be appropriate for measurement of TOX (i.e., by comparison of sensitivity, accuracy, and precision of data).

2.0 SUMMARY OF METHOD

2.1 A sample of water that has been protected against the loss of volatiles by the elimination of headspace in the sampling container, and that is free of undissolved solids, is passed through a column containing 40 mg of activated carbon. The column is washed to remove any trapped inorganic halides and is then combusted to convert the adsorbed organohalides to HX, which is trapped and titrated electrolytically using a microcoulometric detector.

3.0 INTERFERENCES

3.1 Method interferences may be caused by contaminants, reagents, glassware, and other sample-processing hardware. All these materials must be routinely demonstrated to be free from interferences under the conditions of the analysis by running method blanks.

3.1.1 Glassware must be scrupulously cleaned. Clean all glassware as soon as possible after use by treating with chromate cleaning solution. This should be followed by detergent washing in hot water. Rinse with tap water and distilled water and drain dry; glassware which is not volumetric should, in addition, be heated in a muffle furnace at 400°C for 15 to 30 min. (Volumetric ware should not be heated in a muffle

furnace.) Glassware should be sealed and stored in a clean environment after drying and cooling to prevent any accumulation of dust or other contaminants.

3.1.2 The use of high-purity reagents and gases helps to minimize interference problems.

3.2 Purity of the activated carbon must be verified before use. Only carbon samples that register less than 1,000 ng Cl^-/40 mg should be used. The stock of activated carbon should be stored in its granular form in a glass container with a Teflon seal. Exposure to the air must be minimized, especially during and after milling and sieving the activated carbon. No more than a 2-wk supply should be prepared in advance. Protect carbon at all times from all sources of halogenated organic vapors. Store prepared carbon and packed columns in glass containers with Teflon seals.

3.3 Particulate matter will prevent the passage of the sample through the adsorption column. Particulates must, therefore, be eliminated from the sample. This must be done as gently as possible, with the least possible sample manipulation, in order to minimize the loss of volatiles. It should also be noted that the measured TOX will be biased by the exclusion of TOX from compounds adsorbed onto the particulates. The following techniques may be used to remove particulates; however, data users must be informed of the techniques used and their possible effects on the data. These techniques are listed in order of preference:

3.3.1 Allow the particulates to settle in the sample container and decant the supernatant liquid into the adsorption system.

3.3.2 Centrifuge sample and decant the supernatant liquid into the adsorption system.

3.3.3 Measure Purgeable Organic Halides (POX) of sample (see SW-846 Method 9021) and Non-Purgeable Organic Halides (NPOX, that is, TOX of sample that has been purged of volatiles) separately, where the NPOX sample is centrifuged or filtered.

4.0 APPARATUS AND MATERIALS

4.1 Adsorption system (a schematic diagram of the adsorption system is shown in Figure 1):

4.1.1 Adsorption module: Pressurized sample and nitrate-wash reservoirs.

4.1.2 Adsorption columns: Pyrex, 5-cm-long x 6-mm-O.D. x 2-mm-I.D.

4.1.3 Granular activated carbon (GAC): Filtrasorb-400, Calgon-APC or equivalent, ground or milled, and screened to a 100/200 mesh range. Upon combustion of 40 mg of GAC, the apparent halide background should be 1,000 ng Cl^- equivalent or less.

4.1.4 Cerafelt (available from Johns-Manville) or equivalent: Form this material into plugs to fit the adsorption module and to hold 40 mg of GAC in the adsorption columns.

CAUTION: Do not touch this material with your fingers. Oily residue will contaminate carbon.

4.1.5 Column holders.

4.1.6 Class A volumetric flasks: 100-mL and 50-mL.

4.2 Analytical system:

4.2.1 Microcoulometric-titration system: Containing the following components (a flowchart of the analytical system is shown in Figure 2):

4.2.1.1 Boat sampler: Muffled at 800°C for at least 2-4 min and cleaned of any residue by vacuuming after each run.

4.2.1.2 Pyrolysis furnace.

4.2.1.3 Microcoulometer with integrator.

4.2.1.4 Titration cell.

4.2.2 Recording device.

5.0 REAGENTS

5.1 Reagent grade chemicals shall be used in all tests. Unless otherwise indicated, it is intended that all reagents shall conform to the specifications of the Committee on Analytical Reagents of the American Chemical Society, where such specifications are available. Other grades may be used, provided it is first ascertained that the reagent is of sufficiently high purity to permit its use without lessening the accuracy of the determination.

5.2 Reagent water. All references to water in this method refer to reagent water, as defined in Chapter One.

5.3 Sodium sulfite (0.1 M), Na_2SO_3: Dissolve 12.6 g ACS reagent grade Na_2SO_3 in reagent water and dilute to 1 L.

5.4 Concentrated nitric acid (HNO_3).

5.5 Nitrate-wash solution (5,000 mg NO_3^-/L), KNO_3: Prepare a nitrate-wash solution by transferring approximately 8.2 g of potassium nitrate (KNO_3) into a 1-liter Class A volumetric flask and diluting to volume with reagent water.

5.6 Carbon dioxide (CO_2): Gas, 99.9% purity.

5.7 Oxygen (O_2): 99.9% purity.

5.8 Nitrogen (N_2): Prepurified.

5.9 Acetic acid in water (70%), $C_2H_4O_2$: Dilute 7 volumes of glacial acetic acid with 3 volumes of reagent water.

5.10 Trichlorophenol solution, stock (1 μL = 10 μg Cl^-): Prepare a stock solution by accurately weighing accurately 1.856 g of trichlorophenol into a 100-mL Class A volumetric flask. Dilute to volume with methanol.

5.11 Trichlorophenol solution, calibration (1 μL = 500 ng Cl^-), $C_6H_3Cl_3O$: Dilute 5 mL of the trichlorophenol stock solution to 100 mL with methanol.

5.12 Trichlorophenol standard, instrument calibration: First, nitrate-wash a single column packed with 40 mg of activated carbon, as instructed for sample analysis, and then inject the column with 10 μL of the calibration solution.

5.13 Trichlorophenol standard, adsorption efficiency (100 μg Cl^-/liter): Prepare an adsorption-efficiency standard by injecting 10 μL of stock solution into 1 liter of reagent water.

5.14 Blank standard: The methanol used to prepare the calibration standard should be used as the blank standard.

6.0 SAMPLE COLLECTION, PRESERVATION, AND HANDLING

6.1 All samples must be collected using a sampling plan that addresses the considerations discussed in Chapter Nine.

6.2 All samples should be collected in bottles with Teflon septa (e.g., Pierce #12722 or equivalent) and be protected from light. If this is not possible, use amber glass 250-mL bottles fitted with Teflon-lined caps. Foil may be substituted for Teflon if the sample is not corrosive. Samples must be preserved by acidification to pH <2 with sulfuric acid, stored at 4°C, and protected against loss of volatiles by eliminating headspace in the container. Samples should be analyzed within 28 days. The container must be washed and muffled at 400°C before use, to minimize contamination.

6.3 All glassware must be dried prior to use according to the method discussed in Sec. 3.1.1.

7.0 PROCEDURE

7.1 Sample preparation:

7.1.1 Special care should be taken in handling the sample in order to minimize the loss of volatile organohalides. The adsorption procedure should be performed simultaneously on duplicates.

7.1.2 Reduce residual chlorine by adding sulfite (5 mg sodium sulfite crystals per liter of sample). Sulfite should be added at the time of sampling if the analysis is meant to determine the TOX concentration at the time of sampling. It should be recognized that TOX

may increase on storage of the sample. Samples should be stored at 4°C without headspace.

7.2 Calibration:

7.2.1 Check the adsorption efficiency of each newly prepared batch of carbon by analyzing 100 mL of the adsorption efficiency standard, in duplicate, along with duplicates of the blank standard. The net recovery should be within 10% of the standard value.

7.2.2 Nitrate-wash blanks (method blanks): Establish the repeatability of the method background each day by first analyzing several nitrate-wash blanks. Monitor this background by spacing nitrate-wash blanks between each group of ten pyrolysis determinations. The nitrate-wash blank values are obtained on single columns packed with40 mg of activated carbon. Wash with the nitrate solution, as instructed for sample analysis, and then pyrolyze the carbon.

7.2.3 Pyrolyze duplicate instrument-calibration standards and the blank standard each day before beginning sample analysis. The net response to the calibration standard should be within 10% of the calibration-standard value. Repeat analysis of the instrument-calibration standard after each group of ten pyrolysis determinations and before resuming sample analysis, and after cleaning or reconditioning the titration cell or pyrolysis system.

7.3 Adsorption procedure:

7.3.1 Connect two columns in series, each containing 40 mg of 100/200-mesh activated carbon.

7.3.2 Fill the sample reservoir and pass a metered amount of sample through the activated-carbon columns at a rate of approximately 3 mL/min.

> NOTE: 100 mL of sample is the preferred volume for concentrations of TOX between 5 and 500 µg/L, 50 mL for 501 to 1000 µg/L, and 25 mL for 1001 to 2000 µg/L. If the anticipated TOX is greater than 2000 µg/L, dilute the sample so that 100 mL will contain between 1 and 50 µg TOX.

7.3.3 Wash the columns-in-series with 2 mL of the 5,000-mg/L nitrate solution at a rate of approximately 2 mL/min to displace inorganic chloride ions.

7.4 Pyrolysis procedure:

7.4.1 The contents of each column are pyrolyzed separately. After being rinsed with the nitrate solution, the columns should be protected from the atmosphere and other sources of contamination until ready for further analysis.

7.4.2 Pyrolysis of the sample is accomplished in two stages. The volatile components are pyrolyzed in a CO_2-rich atmosphere at a low temperature to ensure the conversion of brominated trihalomethanes to a titratable species. The less volatile components are then pyrolyzed at a high temperature in an O_2-rich atmosphere.

7.4.3 Transfer the contents of each column to the quartz boat for individual analysis.

7.4.4 Adjust gas flow according to manufacturer's directions.

7.4.5 Position the sample for 2 min in the 200°C zone of the pyrolysis tube.

7.4.6 After 2 min, advance the boat into the 800°C zone (center) of the pyrolysis furnace. This second and final stage of pyrolysis may require from 6 to 10 min to complete.

7.5 Detection: The effluent gases are directly analyzed in the microcoulometric-titration cell. Carefully follow manual instructions for optimizing cell performance.

7.6 Breakthrough: The unpredictable nature of the background bias makes it especially difficult to recognize the extent of breakthrough of organohalides from one column to another. All second-column measurements for a properly operating system should not exceed 10% of the two-column total measurement. If the 10% figure is exceeded, one of three events could have happened: (1) the first column was overloaded and a legitimate measure of breakthrough was obtained, in which case taking a smaller sample may be necessary; (2) channeling or some other failure occurred, in which case the sample may need to be rerun; or (3) a high random bias occurred, and the result should be rejected and the sample rerun. Because it may not be possible to determine which event occurred, a sample analysis should be repeated often enough to gain confidence in results. As a general rule, any analysis that is rejected should be repeated whenever a sample is available. In the event that repeated analyses show that the second column consistently exceeds the 10% figure and the total is too low for the first column to be saturated and the inorganic Cl is less than 20,000 times the organic chlorine value, then the result should be reported, but the data user should be informed of the problem. If the second-column measurement is equal to or less than the nitrate-wash blank value, the second-column value should be disregarded.

7.7 Calculations: TOX as Cl^- is calculated using the following formula:

$$\frac{(C_1 - C_3) + (C_2 - C_3)}{V} = \mu g/L \text{ Total Organic Halide}$$

where:

C_1 = μg Cl^- on the first column in series;

C_2 = μg Cl^- on the second column in series;

C_3 = predetermined, daily, average, method-blank value (nitrate-wash blank for a 40-mg carbon column); and

V = the sample volume in liters.

8.0 QUALITY CONTROL

8.1 Refer to Chapter One for specific quality control guidelines.

8.2 This method requires that all samples be run in duplicate.

8.3 Employ a minimum of two blanks to establish the repeatability of the method background, and monitor the background by spacing method blanks between each group of eight analytical determinations.

8.4 After calibration, verify it with an independently prepared check standard.

8.5 Run matrix spike between every 10 samples and bring it through the entire sample preparation and analytical process.

9.0 METHOD PERFORMANCE

9.1 Under conditions of duplicate analysis, the method detection limit is 10 $\mu g/L$.

9.2 Analyses of distilled water, uncontaminated ground water, and ground water from RCRA waste management facilities spiked with volatile chlorinated organics generally gave recoveries between 75-100% over the concentration range 10-500 $\mu g/L$. Relative standard deviations were generally 20% at concentrations greater than 25 $\mu g/L$. These data are shown in Tables 1 and 2.

10.0 REFERENCES

1. Gaskill, A., Compilation and Evaluation of RCRA Method Performance Data, Work Assignment No. 2, EPA Contract No. 68-01-7075, September 1986.

2. Stevens, A.A., R.C. Dressman, R.K. Sorrell, and H.J. Brass, Organic Halogen Measurements: Current Uses and Future Prospects, Journal of the American Water Works Association, pp. 146-154, April 1985.

3. Tate, C., B. Chow, et al., EPA Method Study 32, Method 450.1, Total Organic Halides (TOX), EPA/600/S4-85/080, NTIS: PB 86 136538/AS.

TABLE 1. METHOD PERFORMANCE DATA[a]

Spiked Compound	Matrix[b]	TOX Concentration (µg/L)	Percent Recovery
Bromobenzene	D.W.	443	95
Bromodichloromethane	D.W	160	98
Bromoform	D.W.	160	110
Bromoform	D.W.	238	100
Bromoform	G.W.	10	140
Bromoform	G.W.	31	93
Bromoform	G.W.	100	120
Chloroform	D.W.	98	89
Chloroform	D.W.	112	94
Chloroform	G.W.	10	79
Chloroform	G.W.	30	76
Chloroform	G.W.	100	81
Dibromodichloromethane	D.W.	155	86
Dibromodichloromethane	D.W.	374	73
Tetrachloroethylene	G.W.	10	79
Tetrachloroethylene	G.W.	30	75
Tetrachloroethylene	G.W.	101	78
trans-Dichloroethylene	G.W.	10	84
trans-Dichloroethylene	G.W.	30	63
trans-Dichloroethylene	G.W.	98	60

[a]Results from Reference 2.

[b]G.W. = Ground Water.
D.W. = Distilled Water.

TABLE 2. METHOD PERFORMANCE DATA[a]

Sample Matrix	Unspiked TOX Levels (μg/L)	Spike Level	Percent Recoveries
Ground Water	68, 69	100	98, 99
Ground Water	5, 12	100	110, 110
Ground Water	5, 10	100	95, 105
Ground Water	54, 37	100	111, 106
Ground Water	17, 15	100	98, 89
Ground Water	11, 21	100	97, 89

[a]Results from Reference 3.

Fig. 1. Schematic Diagram of Adsorption System

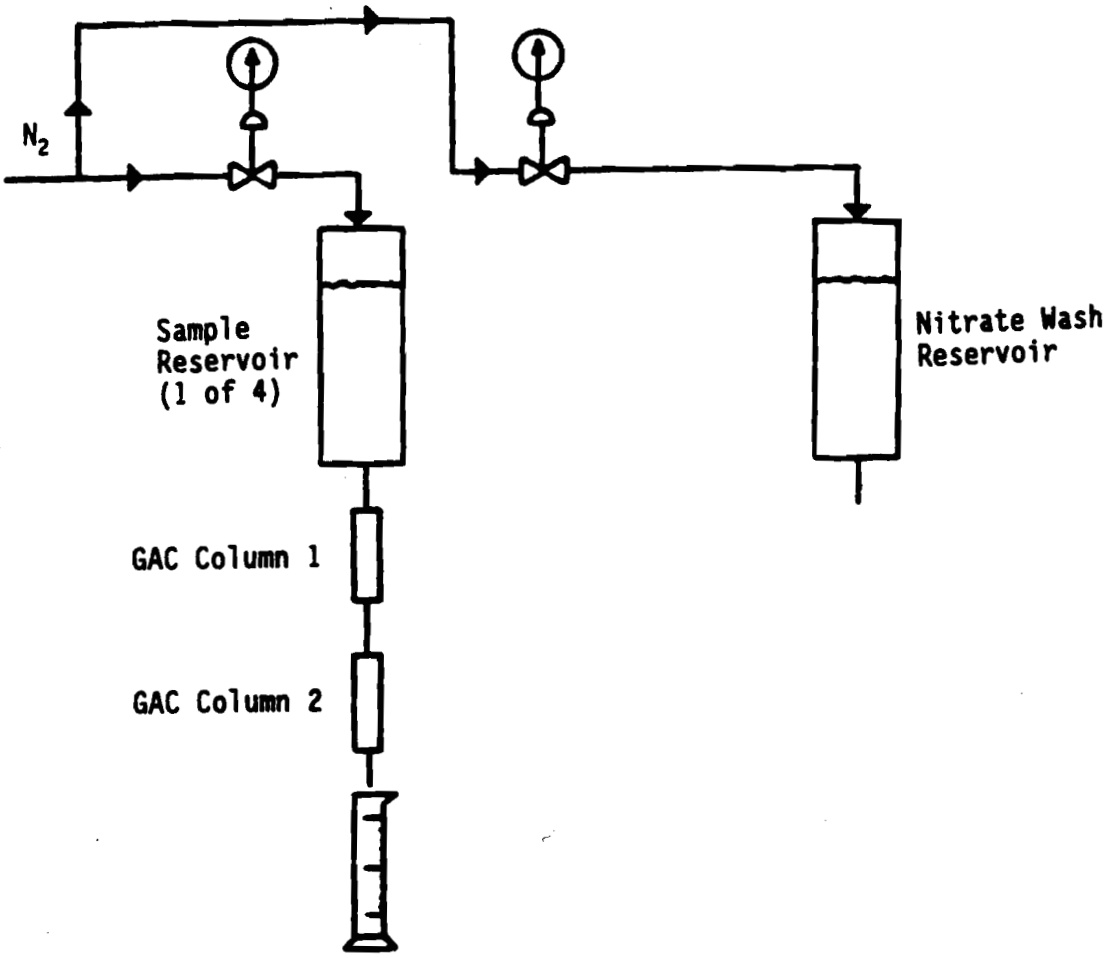

Fig. 2. Flowchart of Analytical System

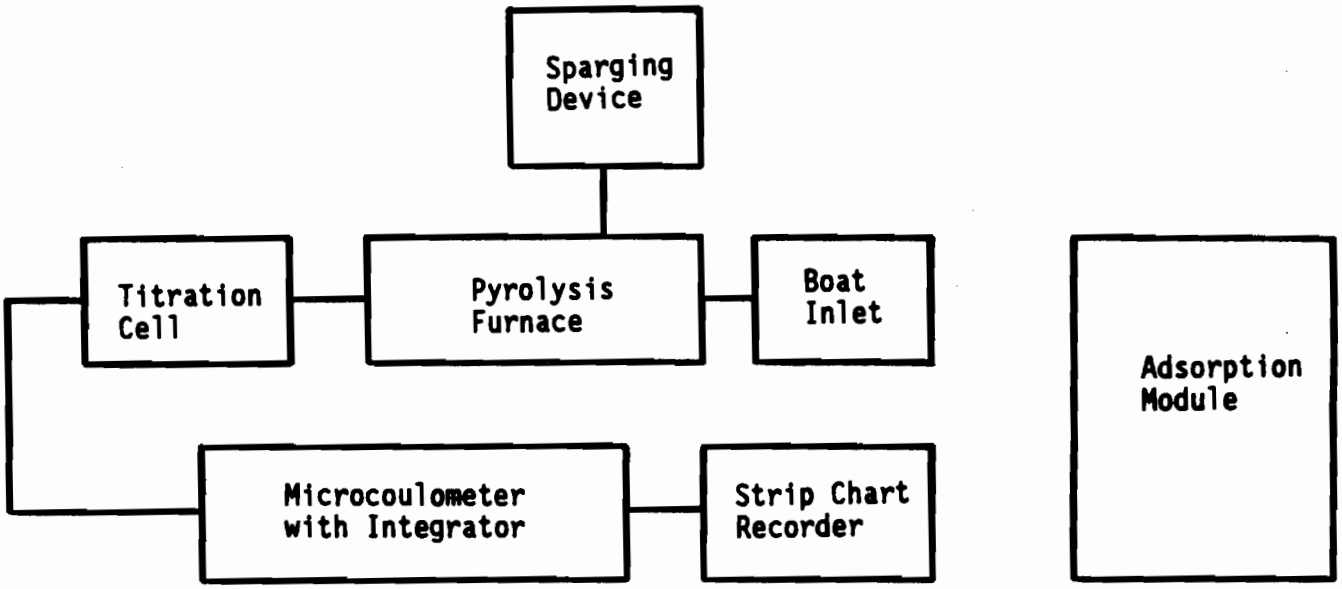

METHOD 9020B

TOTAL ORGANIC HALIDES (TOX)

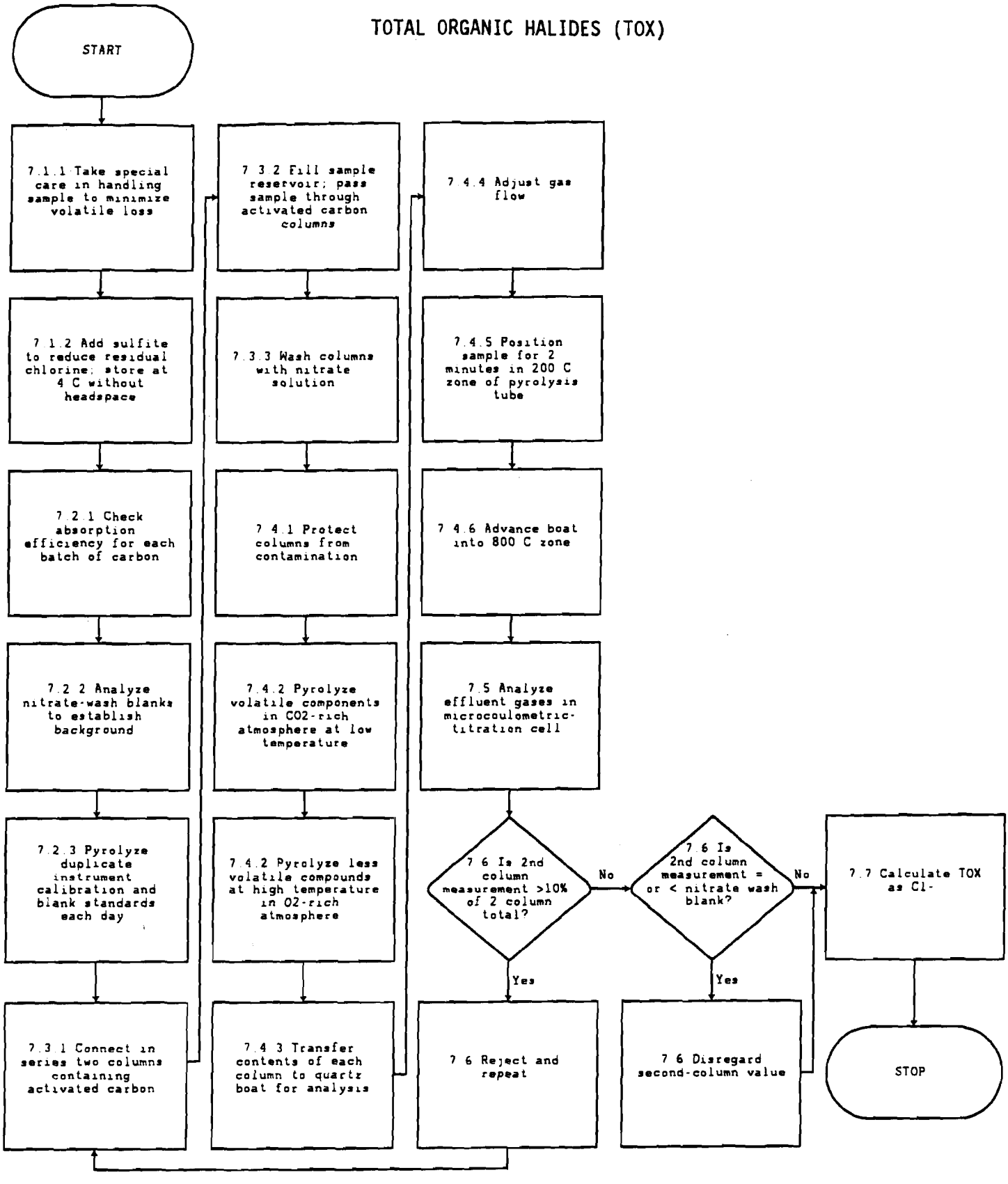

METHOD 9021

PURGEABLE ORGANIC HALIDES (POX)

1.0 SCOPE AND APPLICATION

1.1 Method 9021 determines organically bound halides (chloride, bromide, and iodide) purged from a sample of drinking water or ground water. They are reported as chloride. This method is a quick screening procedure requiring about 10 minutes. The method uses a sparging device, a pyrolysis furnace, and a microcoulometric-titration detector.

1.2 Method 9021 detects purgeable organically bound chlorine, bromine, and iodine. Fluorine containing species are not determined by this method. Method 9021 measures POX concentrations ranging from 5 to 1,000 μg/L.

1.3 Method 9021 is restricted to use by, or under the supervision of, analysts experienced in the operation of a pyrolysis/microcoulometer and in the interpretation of the results.

2.0 SUMMARY OF METHOD

2.1 A sample of water, protected against the loss of volatiles by the elimination of headspace in the sampling container, is transferred to a purging vessel. The volatile organic halides are purged into a pyrolysis furnace using a stream of CO_2 and the hydrogen halide (HX) pyrolysis product is trapped and titrated electrolytically using a microcoulometric detector.

3.0 INTERFERENCES

3.1 Contaminants, reagents, glassware, and other sample processing hardware may cause interferences. Method blanks must be routinely run to demonstrate freedom from interferences under the conditions of the analysis.

3.1.1 Glassware must be scrupulously clean. Clean all glassware as soon as possible after use by treating with chromate cleaning solution. This should be followed by detergent washing in hot water. Rinse with tap water and reagent water and dry at 105°C for 1 hour or until dry. Glassware which is not volumetric should, in addition, be heated in a muffle furnace at 300°C for 15 to 30 minutes (Class A volumetric ware should not be heated in a muffle furnace). Glassware should be sealed and stored in a clean environment after drying and cooling to prevent any accumulation of dust or other contaminants.

3.1.2 Use high purity reagents and gases to minimize interference problems.

3.1.3 Avoid using non-PTFE (polytetrafluoroethylene) plastic tubing, non-TFE thread sealants, or flow controllers with rubber components in the purge gas stream.

3.2 Samples can be contaminated by diffusion of volatile organics (methylene chloride) through the septum seal into the sample during shipment and especially during storage. A trip blank prepared from water and carried through the sampling and handling protocol serves as a check on such contamination. A trip blank should be run with each analytical batch.

3.3 Contamination by carry-over occurs whenever high level and low level samples are sequentially analyzed. To reduce carryover, the purging device and sample syringe must be rinsed with water between sample analyses. Whenever an unusually concentrated sample is encountered, it should be followed by an analysis of water to check for cross contamination. For samples containing large amounts of water-soluble materials, suspended solids, high boiling compounds or high organohalide levels, wash out the purging device with a detergent solution, rinse it with water, and then dry it in a 105°C oven between analyses.

3.4 All operations should be carried out in an area where halogenated solvents, such as methylene chloride, are not being used.

3.5 Residual free chlorine interferes in the method. Free chlorine must be destroyed by adding sodium sulfite when the sample is collected.

4.0 APPARATUS AND MATERIALS

4.1 Sampling equipment (for discrete sampling)

4.1.1 Vial - 25-mL capacity or larger, equipped with a screw-cap with hole in center (Pierce #13075 or equivalent).

4.1.2 Septum - Teflon lined silicone (Pierce #12722 or equivalent). Detergent wash, rinse with tap and reagent water, and dry at 105°C for 1 hour before use.

4.2 Analytical system

4.2.1 Microcoulometric-titration system containing the following components (a schematic diagram of the microcoulometric-titration system is shown in Figure 1).

4.2.1.1 Purging device.

4.2.1.2 Pyrolysis furnace.

4.2.1.3 Titration cell.

4.2.2 Strip chart recorder (optional) - The recorder is recommended to make sure the peak is down to baselines before stopping integration.

4.2.3 Microsyringes - 10-μL and 25-μL with 0.006 in i.d. needle (Hamilton 702N or equivalent).

4.2.4 Syringe valve - 2 way, with Luer ends.

5.0 REAGENTS

5.1 Reagent grade chemicals shall be used in all tests. Unless otherwise indicated, it is intended that all reagents shall conform to the specifications of the Committee on Analytical Reagents of the American Chemical Society, where such specifications are available. Other grades may be used, provided it is first ascertained that the reagent is of sufficiently high purity to permit its use without lessening the accuracy of the determination.

5.2 Reagent water. All references to water in this method refer to reagent water, as defined in Chapter One.

5.3 Sodium sulfide, Na_2S. Granular, anhydrous.

5.4 Acetic acid in water (70%), CH_3COOH. Dilute 7 volumes of glacial acetic acid with 3 volumes of water.

5.5 Sodium chloride calibration standard (1 μg $Cl^-/\mu L$). Dissolve 1.648 g NaCl in water and dilute to 1 liter.

5.6 Carbon dioxide.

5.7 Methanol, CH_3OH. Store away from other solvents.

5.8 Chloroform, $CHCl_3$.

5.9 Chloroform (stock) solution (1 μL = 11.2 μg of $CHCl_3$ or 10 μg Cl^-). Prepare a stock solution by delivering accurately 760 μL (1120 mg) of chloroform into a 100-mL Class A volumetric flask containing approximately 90 mL of methanol. Dilute to volume with methanol (10,000 mg of chlorine/L).

5.10 Chloroform (calibration) solution (1 μL = 0.1 μg Cl^-). Dilute 1 mL of the chloroform stock solution to 100 mL with methanol (100 mg of chlorine/L).

5.11 Chloroform Quality Control (QC) reference sample (100 μg/L). Prepare an aqueous standard by injecting 100 μL of the chloroform calibration standard (100 mg of Cl^-/L) into a Class A volumetric flask containing 100 mL of water. Mix and store in a bottle with zero headspace. Analyze within two hours after preparation.

6.0 SAMPLE COLLECTION, PRESERVATION, AND HANDLING

6.1 All samples must be collected using a sampling plan that addresses the considerations discussed in Chapter Nine of this manual.

6.2 All samples should be collected in bottles with Teflon lined silicone septa (e.g., Pierce #12722 or equivalent) and be protected from light. If this is not possible, use amber glass 250-mL bottles fitted with Teflon lined caps.

6.3 All glassware must be cleaned prior to use according to the process described in Step 3.1.1.

6.4 Special care should be taken in handling the sample in order to minimize the loss of volatile organohalides. This is accomplished through elimination of headspace and by minimizing the number of transfers.

6.5 Reduce residual chlorine, if present, by adding sodium sulfite (5 mg of sodium sulfite crystals per liter of sample). Sodium sulfite should be added to empty sample bottles at the time of sampling. Shake vigorously for 1 minute after bottle has been filled with sample and properly sealed. Samples should be stored at 4°C without headspace. POX may increase during storage of the sample.

6.6 All samples must be analyzed within 14 days of collection.

7.0 PROCEDURE

7.1 Calibration.

7.1.1 Assemble the sparging/pyrolysis/microcoulometric-titration apparatus shown in Figure 1 in accordance with the manufacturer's specifications. Typically a CO_2 flow of 150 mL/min and a sparger temperature of 45 ± 5°C are employed. The pyrolysis furnace should be set at 800 ± 10°C. Attach the titration cell to the pyrolysis tube outlet and fill with electrolyte (70% acetic acid). Flow rate and temperature changes will affect the compounds that are purged and change the percent recovery of marginal compounds. Therefore, these parameters should not be varied. Adjust gas flow rate according to manufacturer's directions.

7.1.2 Turn on the instrument and allow the gas flow and temperatures to stabilize. When the background current of the titration cell has stabilized the instrument is ready for use.

7.1.3 Calibrate the microcoulometric-titration system for Cl^- equivalents by injecting various amounts (1 to 80 µL) of the sodium chloride calibration standard directly into the titration cell and integrating the response using the POX integration mode. If desired, the analog output of the titration cell can be displayed on a strip chart recorder. The range of sodium chloride amounts should cover the range of expected sample concentrations and should always be less than 80 µg of Cl^-. The integrated response should read within 2% or 0.05 µg of the quantity injected (whichever is larger) over the range 1-80 µg Cl^-. If this calibration requirement is not met, then the instrument sensitivity parameters should be adjusted according to the manufacturer's specifications to achieve an accurate response.

7.1.4 Check the performance of the analytical system daily by analyzing three 5-mL aliquots of a freshly prepared 100 µg/L chloroform check standard. The mean of these three analyses should be between 0.4-0.55 µg of Cl^- and the percent relative standard deviation should be 5% or less. If these criteria are not met, the system should be checked as described in the instrument maintenance manual in order to isolate the problem.

NOTE: Low chloroform recovery can often be traced to a vitrified inlet tube. The tube should be checked regularly and the analyst should be able to determine, based on chloroform recoveries, when the tube should be replaced.

7.1.5 Determine an instrument blank daily by running an analysis with the purge vessel empty. The instrument blank should be 0.00 ± 0.05 μg of Cl^-. Analyze a calibration blank sample daily. The calibration blank should be within 0.02 μg of Cl^- of the reagent blank.

7.2 Sample analysis

7.2.1 Select a chloroform spike concentration representative of the expected levels in the samples. Using the chloroform stock solution, prepare a spiking solution in methanol which is 500 times more concentrated than the selected spike concentration. Add 10 μL of the spiking solution to 5-mL aliquots of the samples chosen for spiking (refer to Section 8.0, Quality Control, for guidance in selecting the appropriate number of samples to be spiked).

7.2.2 Allow sample to come to ambient temperature prior to drawing it into the syringe. Remove the plunger from a 5-mL or 10-mL syringe and attach a closed syringe valve. If maximum sensitivity is desired and the sample does not foam excessively, a 10-mL sample aliquot may be analyzed. Otherwise 5-mL aliquots should be used. Open the sample bottle (or standard) and carefully pour the sample into the syringe barrel to just short of overflowing. Replace the syringe plunger and compress the sample. Open the syringe valve and vent any residual air while adjusting the sample volume to 5 mL. Since this process of taking an aliquot destroys the validity of the sample for future analysis, the analyst should fill a second syringe at this time to protect against possible loss of data (e.g., accidental spill), or for duplicate analysis.

7.2.3 Attach the syringe valve assembly to the syringe valve on the purging device. Place the pyrolysis/microcoulometer system in the POX integration mode to activate the integration system. Immediately open the syringe valves and inject the sample into the purging chamber.

7.2.4 Close both valves and purge the sample for 10 minutes.

7.2.5 After integration is complete, open the syringe valves and withdraw the purged sample. Flush the syringe and purging device with water prior to analyzing other samples.

7.2.6 If the integrated response exceeds the working range of the instrument, prepare a dilution of the sample from the aliquot in the second syringe with water and reanalyze. The water must meet the criteria of Step 7.1.5. It may be necessary to heat and purge dilution waters.

7.3 Pyrolysis procedure

7.3.1 Pyrolysis of the purged organic component of the sample is accomplished by pyrolyzing in a CO_2-rich atmosphere at a low temperature

to ensure the conversion of brominated trihalomethanes to a titratable species.

7.4 Directly analyze the effluent gases in the microcoulometric-titration cell. Carefully follow instrument manual instructions for optimizing cell performance.

7.5 Calculations - POX as Cl^- is calculated using the following formula:

$$\frac{Q_s}{V} \times 1000 = \mu g/L \text{ Purgeable Organic Halide}$$

where:

Q_s = Quantity of POX as μg of Cl^- in the sample aliquot.
V = Volume of sample aliquot in mL.

8.0 QUALITY CONTROL

8.1 All quality control data should be maintained and available for easy reference or inspection for 3 years. This method is restricted to use by or under supervision of experienced analysts. Refer to the appropriate section of Chapter One for additional quality control guidelines.

8.2 Analyze a minimum of one reagent blank every 20 samples or per analytical batch, whichever is more frequent, to determine if contamination or any memory effects are occurring.

8.3 In addition to the performance check mentioned in Step 7.1.4, verify calibration with an independently prepared chloroform QC reference sample every 15 samples.

8.4 Analyze matrix spiked samples for every 10 samples or analytical batch, whichever is more frequent. The spiked sample is carried through the whole sample preparation process and analytical process.

8.5 Analyze all samples in replicate.

9.0 METHOD PERFORMANCE

9.1 Under conditions of duplicate analysis, the reliable limit of detection is 5 $\mu g/L$.

9.2 Analyses of distilled water, uncontaminated ground water, and ground water from RCRA waste management facilities spiked with volatile chlorinated organics generally give recoveries of 44-128% over the concentration range of 29-4500 $\mu g/L$. Relative standard deviations are generally less than 20% at concentrations greater than 25 $\mu g/L$. These data are shown in Tables 1 and 2.

10.0 REFERENCES

1. Takahashi, Y.; Moore, R.T.; Joyce, R.J. "Measurement of Total Organic Halides (TOX) and Purgeable Organic Halides (POX) in Water Using Carbon Adsorption and Microcoulometric Determination"; Proceedings from Division of Environmental Chemistry, American Chemical Society Meeting, March 23-28, 1980.

2. Methods for Chemical Analysis of Water and Wastes; U.S. Environmental Protection Agency. Office of Research and Development. Environmental Monitoring and Support Laboratory. ORD Publication Offices of Center for Environmental Research Information: Cincinnati, OH, 1983; EPA-600/4-79-020.

3. Fed. Regist. 1979, 45, 69468-69473; December 3.

4. Rohrbough, W.G.; et al. Reagent Chemicals, American Chemical Society Specifications, 7th ed.; American Chemical Society: Washington, DC, 1986.

5. "Development and Evaluation of Methods for Total Organic Halide and Purgeable Organic Halide in Wastewater"; U.S. Environmental Protection Agency. Environmental Monitoring and Support Laboratory. Cincinnati, OH, 1984; EPA-600/4-84-008; NTIS-PB-84-134-337.

6. 1985 Annual Book of ASTM Standards, Vol. 11.01; "Standard Specification for Reagent Water"; ATSM: Philadelphia, PA, 1985; D1193-77.

7. Dohrmann. Rosemount Analytical Division. Santa Clara, CA 95052-8007.

8. Cosa Instruments. Norwood, NJ 21942.

TABLE 1.
PRECISION AND ACCURACY DATA FOR SELECTED PURGEABLE ORGANIC HALIDES
(Reference 5)

Compound	Dose[1] (µg/L as Cl^-)	Average Recovery (µg/L as Cl^-)	Average Percent Recovery	Standard Deviation	MDL[2] (µg/L)	Number of Replicates
Chloroform	11	11	100	1.4	4.5	7
Trichloroethene	10	6	60	0.7	2.2	7
Tetrachloroethene	10	5	50	0.8	3.2	7
Chlorobenzene	8	3	38	0.6	2.0[3]	7

[1]Ten milliliter aliquot of spiked reagent water analyzed.

[2]The method detection limit (MDL) is defined as the minimum concentration of a substance that can be measured and reported with 99% confidence that the value is above zero.

[3]Practical MDL probably greater (approximately 5 to 6 µg/L) due to low recovery.

TABLE 2.
PRECISION AND ACCURACY DATA FOR VARIOUS WATER SAMPLES
(Reference 5)

Sample[1]	Background Spike Component	Level ($\mu g/L$ as Cl^-)	Spike Level ($\mu g/L$ as Cl^-)	Average Percent Recovery	Standard Deviation	Number of Replicates
Tap Water	---	---	0	---	2	3
POTW Sewage	Chloroform	68	29	128	5	3
Chlorinated Hydrocarbon Plant Wastewater	Chloroform	114	460	77	36	3
Chlorinated Hydrocarbon Plant Wastewater	Chloroform	32	1,500	50	32	3
Chlorinated Hydrocarbon Plant Wastewater	Chloroform	32	4,500	87	470	3
Solid Waste[2] Leachate	1,1-Dichloro-ethane	171	800	41	17	3
Industrial Wastewater	Methylene chloride	510	800	65	120	3
Aniline[3] Wastewater	Chloroform	15,700	15,000	150	58	3
Aniline[3] Wastewater	Chloroform	15,700	45,000	91	400	3

[1]Five milliliter sample aliquots analyzed.

[2]Diluted 200:1 prior to analysis. Values for this sample are in mg/L for original sample.

[3]Diluted 10:1 prior to analysis. Values are for undiluted sample.

FIGURE 1.
MICROCOULOMETRIC - TITRATION SYSTEM

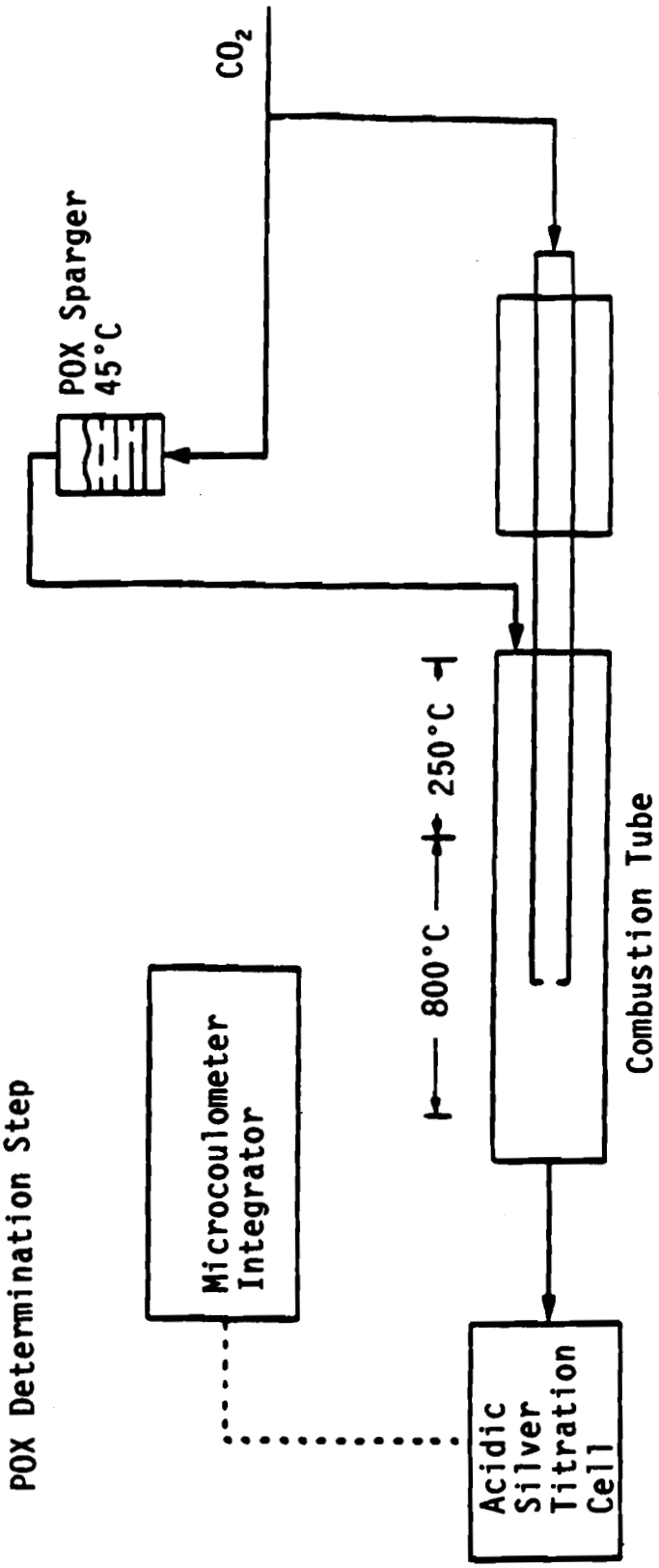

METHOD 9021
PURGEABLE ORGANIC HALIDES (POX)

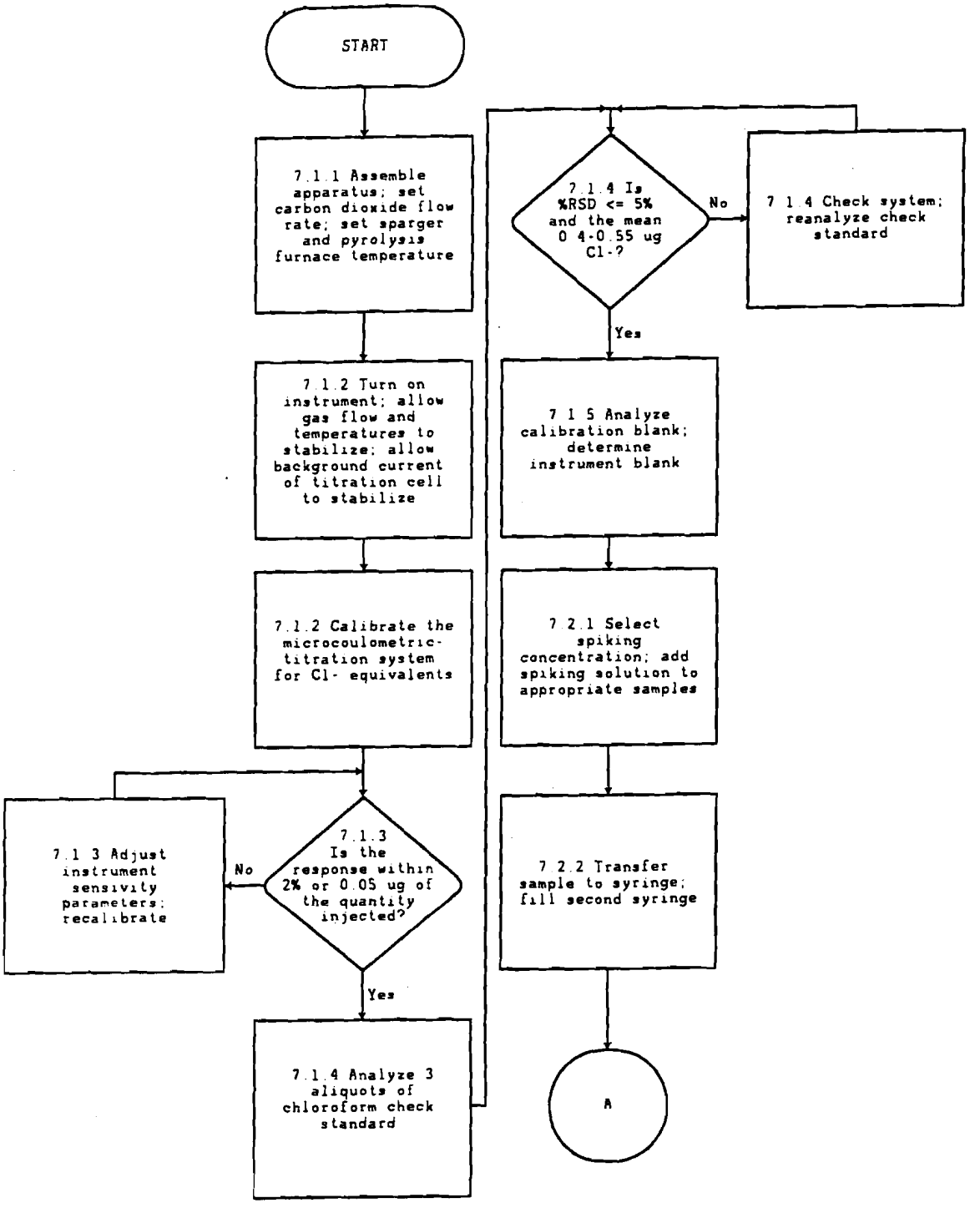

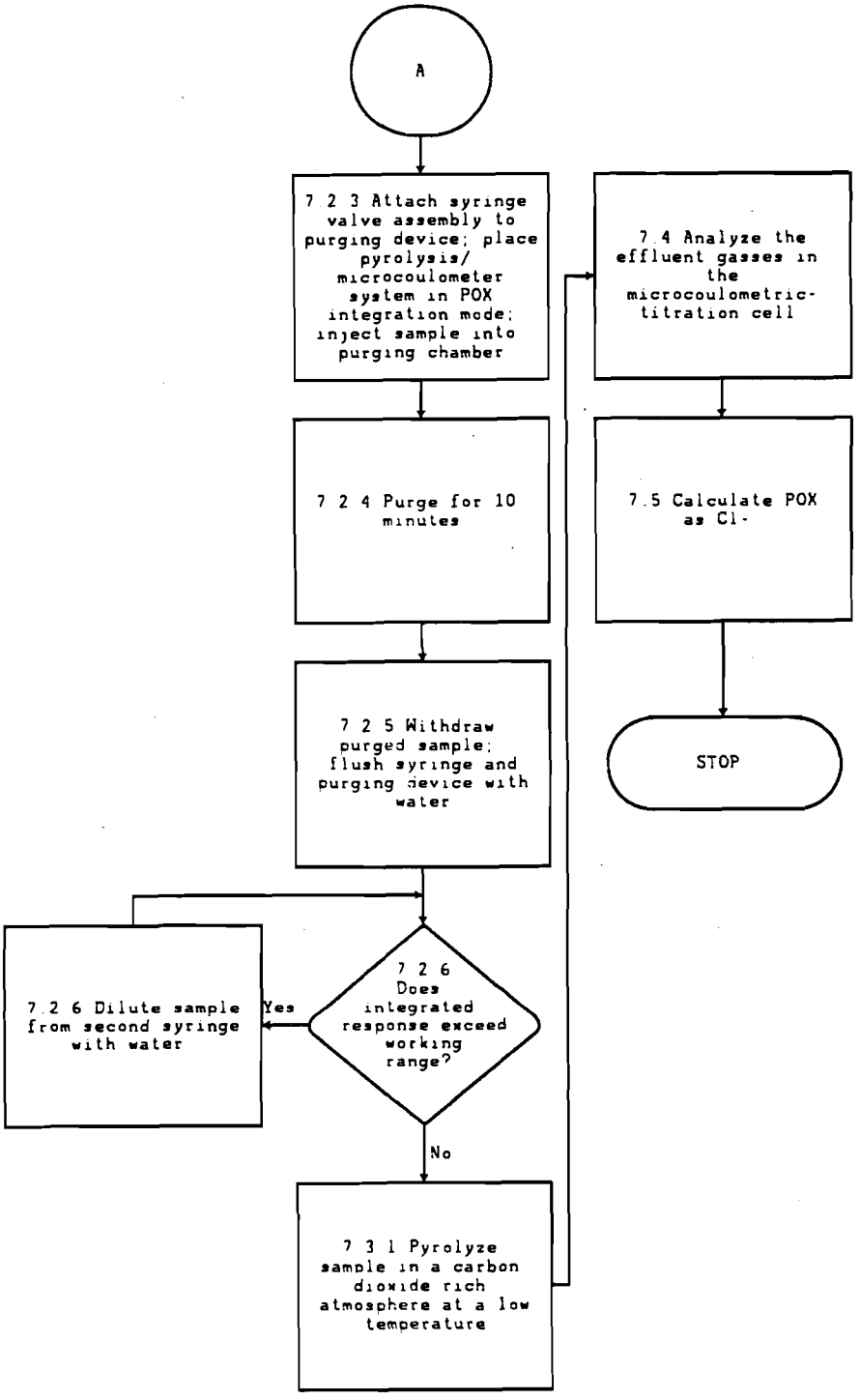
A
7 2 3 Attach syringe valve assembly to purging device; place pyrolysis/ microcoulometer system in POX integration mode; inject sample into purging chamber
7 2 4 Purge for 10 minutes
7 2 5 Withdraw purged sample; flush syringe and purging device with water
7 2 6 Does integrated response exceed working range?
Yes
7 2 6 Dilute sample from second syringe with water
No
7 3 1 Pyrolyze sample in a carbon dioxide rich atmosphere at a low temperature
7 4 Analyze the effluent gasses in the microcoulometric-titration cell
7 5 Calculate POX as Cl-
STOP

METHOD 9022

TOTAL ORGANIC HALIDES (TOX) BY NEUTRON ACTIVATION ANALYSIS

1.0 SCOPE AND APPLICATION

1.1 Method 9022 determines Total Organic Halides (TOX) in aqueous samples. The method uses a carbon adsorption procedure identical to that of Method 9020 (TOX analysis using a microcoulometric-titration detector), irradiation by neutron bombardment, and then detection using a gamma-ray detector.

1.2 Method 9022 detects all organic halides containing chlorine, bromine, and iodine that are adsorbed by granular activated carbon under the conditions of the method. Each halogen can be quantitated independently.

1.3 Method 9022 is restricted to use by, or under the supervision of, analysts experienced in the operation of neutron activation analysis and familiar with spectral interferences.

1.4 This method, which may be used in place of Method 9020, has the advantage of determining the individual concentrations of the halogens chlorine, bromine, and iodine in addition to TOX.

2.0 SUMMARY OF METHOD

2.1 A sample of water that has been protected against the loss of volatiles by the elimination of headspace in the sampling container, and that is free of undissolved solids, is passed through a column containing 40 mg of granular activated carbon (GAC). The column is washed to remove any trapped inorganic halides. The GAC sample is exposed to thermal neutron bombardment, creating a radioactive isotope. Gamma-ray emission, which is unique to each halogen, is counted. The areas of the resulting peaks are directly proportional to the concentrations of the halogens.

3.0 INTERFERENCES

3.1 Method interferences may be caused by contaminants, reagents, glassware, and other sample processing hardware. All these materials must be routinely demonstrated to be free from interferences under the conditions of the analysis by running method blanks.

3.1.1 Glassware must be scrupulously cleaned. Clean all glassware as soon as possible after use by treating with chromatic cleaning solution. This should be followed by detergent washing in hot water. Rinse with tap water and distilled water and drain dry; glassware which is not volumetric should, in addition, be heated in a muffle furnace at

400°C for 15 to 30 min. Volumetric ware should not be heated in a muffle furnace. Glassware should be sealed and stored in a clean environment after drying and cooling to prevent any accumulation of dust or other contaminants.

3.1.2 The use of high-purity reagents and gases helps to minimize interference problems.

3.2 Purity of the activated carbon must be verified before use. Only carbon samples that register less than 2,000 ng Cl^-/40 mg GAC should be used. The stock of activated carbon should be stored in its granular form in a glass container with a Teflon seal. Exposure to the air must be minimized, especially during and after milling and sieving the activated carbon. No more than a 2-wk supply should be prepared in advance. Protect carbon at all times from all sources of halogenated organic vapors. Store prepared carbon and packed columns in glass containers with Teflon seals.

4.0 APPARATUS AND MATERIALS

4.1 Adsorption system (a general schematic of the adsorption system is shown in Figure 1):

4.1.1 **Adsorption module** with pressurized sample and nitrate-wash reservoirs.

4.1.2 **Adsorption columns:** Pyrex, 5-cm long x 6-mm O.D. x 2-mm I.D.

4.1.3 **Granular activated carbon** (GAC): Filtrasorb-400, Calgon-APC or equivalent, ground or milled, and screened to a 100/200 mesh range. Upon combustion of 40 mg of GAC, the apparent halide background should be 1000 ng Cl^- equivalent or less.

4.1.4 **Cerafelt** (available from Johns-Manville) or equivalent: Form this material into plugs using a 2-mm-I.D. stainless steel borer with ejection rod to hold 40 mg of GAC in the adsorption columns.

CAUTION: Do not touch this material with your fingers. Oily residue will contaminate carbon.

4.1.5 **Column holders.**

4.1.6 **Volumetric flasks:** 100-mL, 50-mL.

4.2 Containers suitable for containment of samples and standards during irradiation (e.g., 1/5-dram polyethylene snap-cap vial).

4.3 Sample introduction system and a reactor generating a thermal neutron flux capable of achieving enough halogen activity for counting purposes (e.g., a reactor having a neutron flux of 5×10^{12} neutrons/cm^2/sec).

4.4 A gamma-ray detector and data-handling system capable of resolving the halogen peaks from potential interferences and background.

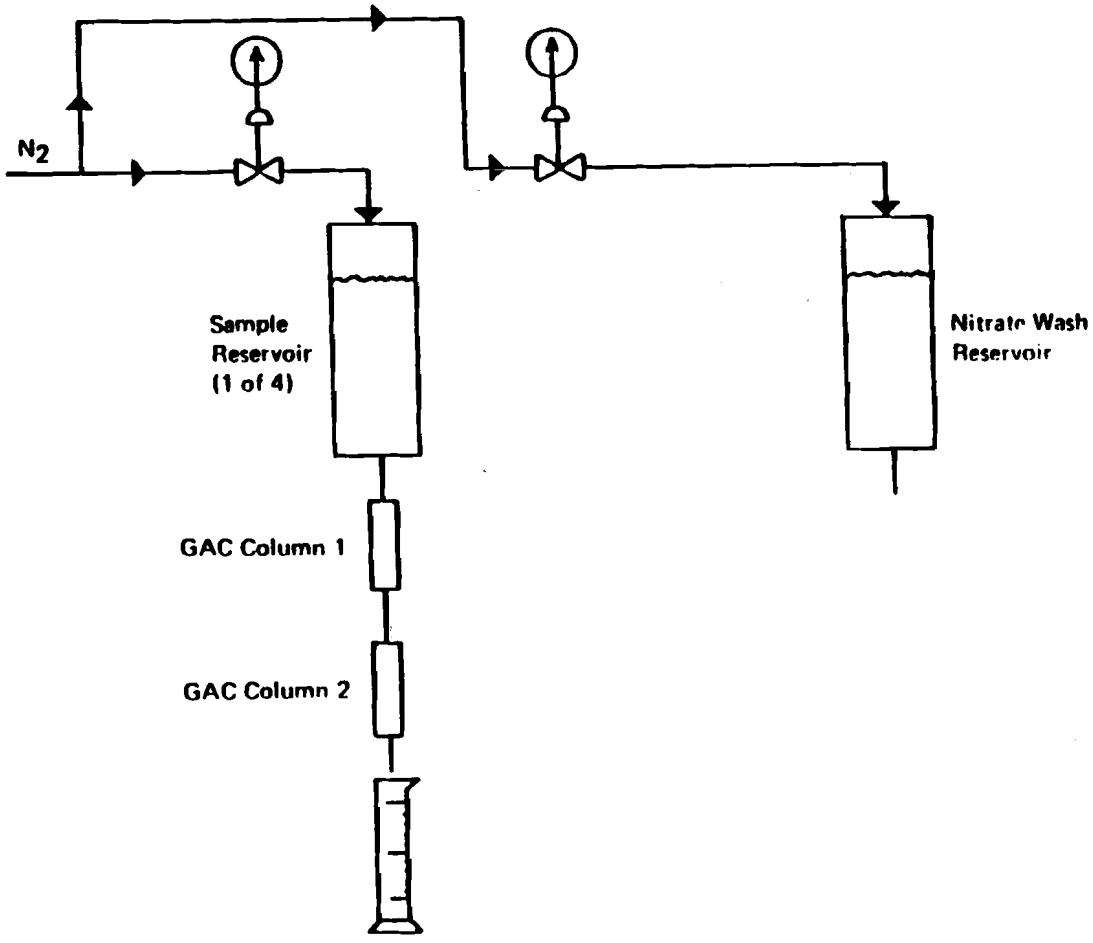

Figure 1. Schematic diagram of adsorption system.

5.0 REAGENTS

5.1 Prepurified nitrogen.

5.2 ASTM Type II water (ASTM D1193): Water should be monitored for impurities.

5.3 Nitrate-wash solution (5,000 mg NO_3^-/L): Prepare a nitrate-wash solution by transferring approximately 8.2 g of potassium nitrate (KNO_3) into a 1-liter volumetric flask and diluting to volume with Type II water.

5.4 Acetone and nanograde hexane (50% v/v mixture).

5.5 Sodium sulfite, 0.1 M (ACS reagent grade, 12.6 g/L).

5.6 Concentrated nitric acid (HNO_3): Reagent grade.

5.7 Standards: 25-ug Cl, 2.5-ug Br, and 2.5-ug I.

5.8 Radioactive standards to be used for calibrating gamma-ray detection systems.

5.9 Trichlorophenol solution, stock (1 uL = 10 ug Cl^-): Prepare a stock solution by accurately weighing accurately 1.856 g of trichlorophenol into a 100-mL volumetric flask. Dilute to volume with methanol.

5.10 Trichlorophenol standard, adsorption efficiency (100 ug Cl^-/liter): Prepare an adsorption-efficiency standard by injecting 10 uL of stock solution into 1 liter of Type II water.

6.0 SAMPLE COLLECTION, PRESERVATION, AND HANDLING

6.1 All samples must have been collected using a sampling plan that addresses the considerations discussed in Chapter Nine of this manual.

6.2 All samples should be collected in bottles with Teflon septa (e.g., Pierce #12722 or equivalent) and be protected from light. If this is not possible, use amber glass, 250-mL, fitted with Teflon-lined caps. Foil may be substituted for Teflon if the sample is not corrosive. Samples must be protected against loss of volatiles by eliminating headspace in the container. Containers must be washed and muffled at 400°C before use, to minimize contamination.

6.3 All glassware must be dried prior to use according to the method discussed in Paragraph 3.1.1.

7.0 PROCEDURE

7.1 Sample preparation:

7.1.1 Special care should be taken in handling the sample in order to minimize the loss of volatile organohalides. The adsorption procedure should be performed simultaneously on the front and back columns.

7.1.2 Reduce residual chlorine by adding sulfite (1 mL of 0.1 M sulfite per liter of sample). Sulfite should be added at the time of sampling if the analysis is meant to determine the TOX concentration at the time of sampling. It should be recognized that TOX may increase on storage of the sample. Samples should be stored at 4°C without headspace.

7.1.3 Samples containing undissolved solids should be centrifuged and decanted.

7.1.4 Adjust the pH of the sample to approximately 2 with concentrated HNO_3 just prior to adding the sample to the reservoir.

7.2 Calibration:

7.2.1 Check the adsorption efficiency of each newly prepared batch of carbon by analyzing 100 mL of the adsorption efficiency standard, in duplicate, along with duplicates of the blank standard. The net recovery should be within 5% of the standard value.

7.2.2 Nitrate-wash blanks (method blanks): Establish the repeatability of the method background each day by first analyzing several nitrate-wash blanks. Monitor this background by spacing nitrate-wash blanks between each group of eight analysis determinations. The nitrate-wash blank values are obtained on single columns packed with 40 mg of activated carbon. Wash with the nitrate solution, as instructed for sample analysis, and then analyze the carbon.

7.2.3 Prior to each day's operation, calibrate the instrument using radioactive standards (e.g., cobalt-60 and radium-226 sources). The instrument is calibrated such that gamma rays from the standards fall within one channel of their true energies. A 100-sec blank is then counted to verify that no stray radioactive sources are within sensing distance of the detector. As data are obtained throughout the day, peak locations in the standards are monitored to ensure there is no electronic drift of the instrument. If drift is noted, the system must be recalibrated.

7.3 Adsorption procedure:

7.3.1 Connect in series two columns, each containing 40 mg of 100/200-mesh activated carbon.

7.3.2 Fill the sample reservoir and pass a metered amount of sample through the activated-carbon columns at a rate of approximately 3 mL/min.

NOTE: 100 mL of sample is the preferred volume for concentrations of TOX between 5 and 500 ug/L, 50 mL for 501 to 1000 ug/L, and 25 mL for 1,001 to 2,000 ug/L.

7.3.3 Wash the columns-in-series with at least 2 mL of the 5,000-mg/L nitrate solution at a rate of approximately 2 mL/min to displace inorganic chloride ions.

7.4 Activation:

7.4.1 After the quartz collection tube with the GAC is removed from the extraction unit, the GAC and cerafelt pads are extruded, using the packing rod, into a prewashed plastic container (e.g., 1/5-dram polyethylene snap-cap vial). The vial has been prewashed to remove inorganic and organic chlorine by a soak in distilled water, followed by storage in a glass jar containing 50% v/v acetone and hexane. After extrusion, the vial is removed by forceps and air-dried to remove residual water, acetone, and hexane. After extrusion, the vial is snapped shut, the hinge removed with a scalpel blade, the cap heat-sealed to the vial with an electric soldering gun reserved for that purpose, and a single-digit number placed on the vial with a marker pen.

7.4.2 Samples plus a similar vial containing 25 ug Cl, 2.5 ug Br, and 2.5 ug I standards are then introduced into the reactor, generally by placing them together in a 5-dram polyethylene vial and inserting them into a pneumatic-tube transfer "rabbit" for neutron irradiation. Irradiation is typically for a 15-min period at a thermal neutron irradiation flux of 5×10^{12} neutrons/cm^2/sec. After returning from the reactor, the rabbit is allowed to "cool" for 20 min to allow short-lived radioisotopes (primarily Al) present in the GAC to decay.

7.5 Detection:

7.5.1 Analysis is performed using a lithium-drifted germanium [Ge(Li)] gamma-ray detector with an amplifier and a 4096-channel memory unit for data storage. The analyses can be performed either manually, with the operator changing samples and transferring the data to magnetic tape, or automatically, with both functions performed by an automatic sample changer.

7.5.2 Analysis begins by counting the standard and samples for a suitable time period (e.g., 200-sec "live" time for the standards and samples). The operator records the time intervals between samples and the "dead" time of each sample in a logbook for later use in calculating halogen concentrations in each sample.

7.5.3 Breakthrough: The unpredictable nature of the background bias makes it especially difficult to recognize the extent of breakthrough of organohalides from one column to another. All second-

column measurements for a properly operating system should not exceed 10% of the two-column total measurement. If the 10% figure is exceeded, one of three events could have happened: (1) the first column was overloaded and a legitimate measure of breakthrough was obtained, in which case taking a smaller sample may be necessary; (2) channeling or some other failure occurred, in which case the sample may need to be rerun; or (3) a high random bias occurred, and the result should be rejected and the sample rerun. Because it may not be possible to determine which event occurred, a sample analysis should be repeated often enough to gain confidence in results. As a general rule, any analysis that is rejected should be repeated whenever a sample is available. In the event that repeated analyses show that the second column consistently exceeds the 10% figure and the total is too low for the first column to be saturated and the inorganic Cl is less than 20,000 times the organic chlorine value, then the result should be reported, but the data user should be informed of the problem. If the second-column measurement is equal to or less than the nitrate-wash blank value, the second-column value should be disregarded.

7.6 Calculations:

7.6.1 Chlorine, bromine, and iodine can be analyzed within a 200-sec counting period taking place 20 to 40 min after irradiation.

7.6.2 Chlorine is analyzed using the 1642-KeV gamma ray produced by 37.1-min ^{38}Cl. Bromine is analyzed using the 616-KeV gamma ray from 17.7-min ^{80}Br, and iodine is analyzed using the 442-KeV gamma ray produced by 25-min ^{128}I.

7.6.3 The calculation used for quantitation is:

$$\text{ppm halogen} = \frac{\text{cts unk.}}{\text{cts std.}} \times \frac{\text{counting time std.}}{\text{counting time unk.}} \times \frac{\text{ug in std.}}{\text{sample vol.}} \times e^{\lambda t}$$

where:

cts unk. = the integrated area of the appropriate gamma-ray peak in the unknown with background subtracted and the total multiplied by 1 + [(% dead time unknown - % dead time std.)/200]. The latter correction is usually less than 4% and corrects for pile-up errors.

cts std. = the integrated area of the appropriate gamma-ray peak in the standard with background subtracted.

counting time std. = the "live" counting time in seconds of the standard.

counting time unk. = the "live" counting time in seconds of the unknown.

ug in std. = the number of micrograms of the stable element in question in the standard (25 for Cl, 2.5 for Br and I).

sample vol. = the volume of sample passed through the GAC column, in mL.

$e^{\lambda t}$ = the decay correction to bring all statistics back to $t = 0$; $\lambda = 0.693/t_{1/2}$, where $t_{1/2}$ = the half-life in minutes.

t = the time interval in minutes from the end of the count of the standard until the end of the count of the sample.

7.6.4 No further calculations are necessary as long as the final sample is counted within 40 min after the end of irradiation.

8.0 QUALITY CONTROL

8.1 All quality control data should be maintained and available for easy reference or inspection.

8.2 Before performing any analyses, the analyst must demonstrate the ability to generate acceptable accuracy and precision with this procedure by analyzing appropriate quality-control check samples.

8.3 The laboratory must develop and maintain a statement of method accuracy for their laboratory. The laboratory should update the accuracy statement regularly as new recovery measurements are made.

8.4 Employ a minimum of one blank per sample batch to determine if contamination is occurring.

8.5 Verify calibration with an independently prepared check standard every 15 samples.

8.6 Run one spike duplicate sample for every 10 samples. A duplicate sample is a sample brought through the whole sample preparation and analytical process.

8.7 It is recommended that the laboratory adopt additional quality-assurance practices for use with this method. The specific practices that would be most productive will depend upon the needs of the laboratory and the precision of the sampling technique. Whenever possible, the laboratory should perform analysis of standard reference materials and participate in relevant performance-evaluation studies.

8.8 Quality control for the analysis phase is very straightforward in as much as the instrument is a noncontact analyzer. That is, only the radiation emitted from the sample -- not the sample itself -- should touch the analyzer.

Because contamination of the system is not usually a problem (unless a sample spills on it), the most serious quality-control issues deal with uniform neutron flux, counting geometry, and spectral interpretation. The amount of radioactivity induced in a sample is directly proportional to the neutron flux it is exposed to. Because this flux can vary depending on how the sample is positioned in relation to the reactor core during irradiation, it is essential that a known standard be irradiated with every sample batch to act as a flux monitor. Care must also be taken to ensure that the standard and all samples associated with the standard are counted at the same distance from the detector.

9.0 METHOD PERFORMANCE

9.1 The following statistics are based on seven replicate analyses:

		Chlorine	Bromine	Iodine	Combined average	Pooled
River water	$\bar{X}$	38.2	17	<1	55.2	0.18
		0.16	0.076	---	---	0.18
Well water	$\bar{X}$ (ppb)	50.7	4.7	<1	55.4	---
		0.30	0.038	---	55.2	0.30
WWTP effluent	$\bar{X}$	242	35.2	20.4	539.6	---
		0.56	0.033	0.23	---	0.61

9.2 The reliable limits of detection are 5 ppb for chlorine and 1 ppb for iodine and bromine.

10.0 REFERENCES

None required.

METHOD 9022

TOTAL ORGANIC HALIDES (TOX) BY

NEUTRON ACTIVATION ANALYSIS

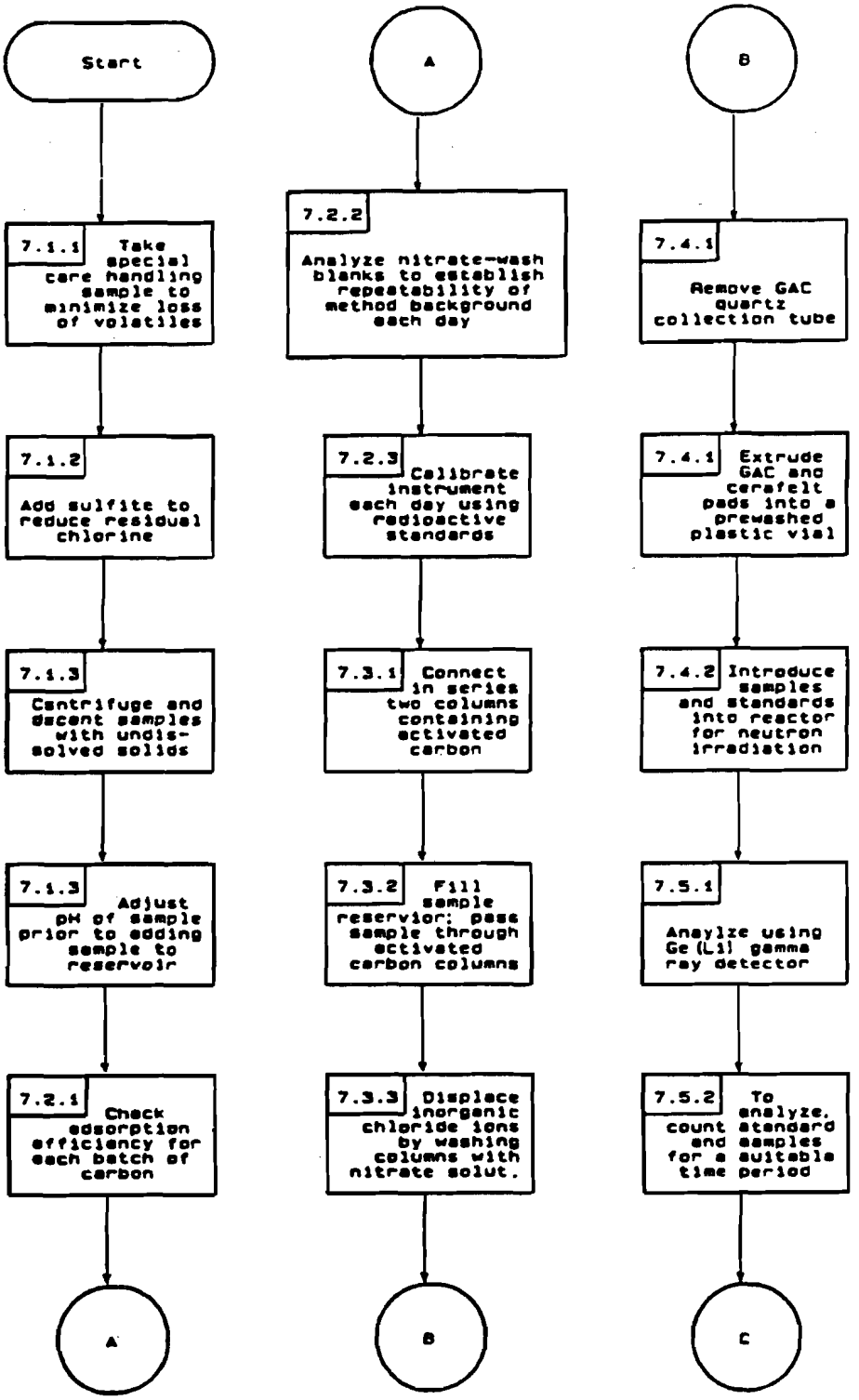

Revision 0
Date September 1986

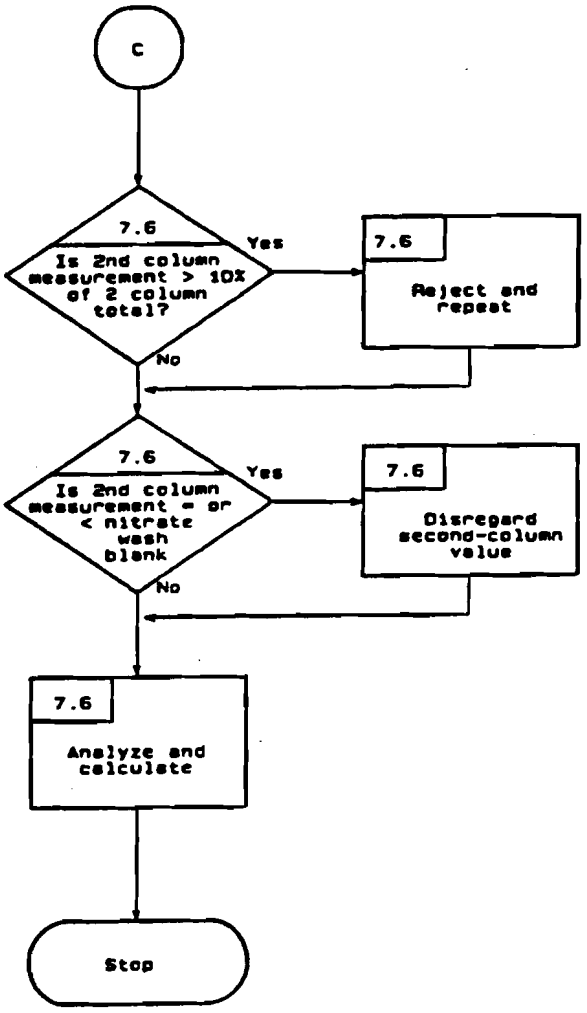
C
7.6
Is 2nd column measurement > 10% of 2 column total?
Yes
7.6
Reject and repeat
No
7.6
Is 2nd column measurement = or < nitrate wash blank
Yes
7.6
Disregard second-column value
No
7.6
Analyze and calculate
Stop

METHOD 9030A

ACID-SOLUBLE AND ACID-INSOLUBLE SULFIDES

1.0 SCOPE AND APPLICATION

1.1 The distillation procedure described in this method is designed for the determination of sulfides in aqueous, solid waste materials, or effluents.

1.2 This method provides only a semi-quantitative determination of sulfide compounds considered "acid-insoluble" (e.g., CuS and SnS_2) in solid samples. Recovery has been shown to be 20 to 40% for CuS, one of the most stable and insoluble compounds, and 40 to 60% for SnS_2 which is slightly more soluble.

1.3 This method is not applicable to oil or multiphasic samples or samples not amenable to the distillation procedure which can be analyzed by Method 9031.

1.4 Method 9030 is suitable for measuring sulfide concentrations in samples which contain between 0.2 and 50 mg/kg of sulfide.

1.5 This method is not applicable for distilling reactive sulfide, however, Method 9030 is used to quantify the concentration of sulfide from the reactivity test. Refer to Chapter Seven, Step 7.3.4.1 for the determination of reactive sulfide.

1.6 This method measures total sulfide which is usually defined as the acid-soluble fraction of a waste. If, however, one has previous knowledge of the waste and is concerned about both soluble sulfides such as H_2S, and metal sulfides, such as CuS and SnS_2, then total sulfide is defined as the combination of both acid-soluble and acid-insoluble fractions. For wastes where only metal sulfides are suspected to be present, only the acid-insoluble fraction needs to be performed.

2.0 SUMMARY OF METHOD

2.1 For acid-soluble sulfide samples, separation of sulfide from the sample matrix is accomplished by the addition of sulfuric acid to the sample. The sample is heated to 70°C and the hydrogen sulfide (H_2S) which is formed is distilled under acidic conditions and carried by a nitrogen stream into zinc acetate gas scrubbing bottles where it is precipitated as zinc sulfide.

2.2 For acid-insoluble sulfide samples, separation of sulfide from the sample matrix is accomplished by suspending the sample in concentrated hydrochloric acid by vigorous agitation. Tin(II) chloride is present to prevent oxidation of sulfide to sulfur by the metal ion (as in copper(II)), by the matrix, or by dissolved oxygen in the reagents. The prepared sample is distilled under acidic conditions at 100°C under a stream of nitrogen. Hydrogen sulfide gas is released from the sample and collected in gas scrubbing bottles containing zinc(II) and a strong acetate buffer. Zinc sulfide precipitates.

2.3 The sulfide in the zinc sulfide precipitate is oxidized to sulfur with a known excess amount of iodine. Then the excess iodine is determined by titration with a standard solution of phenyl arsine oxide (PAO) or sodium thiosulfate until the blue iodine starch complex disappears. As the use of standard sulfide solutions is not possible because of oxidative degradation, quantitation is based on the PAO or sodium thiosulfate.

3.0 INTERFERENCES

3.1 Aqueous samples must be taken with a minimum of aeration to avoid volatilization of sulfide or reaction with oxygen, which oxidizes sulfide to sulfur compounds that are not detected.

3.2 Reduced sulfur compounds, such as sulfite and hydrosulfite, decompose in acid, and may form sulfur dioxide. This gas may be carried over to the zinc acetate gas scrubbing bottles and subsequently react with the iodine solution yielding false high values. The addition of formaldehyde into the zinc acetate gas scrubbing bottles removes this interference. Any sulfur dioxide entering the scrubber will form an addition compound with the formaldehyde which is unreactive towards the iodine in the acidified mixture. This method shows no sensitivity to sulfite or hydrosulfite at concentrations up to 10 mg/kg of the interferant.

3.3 Interferences for acid-insoluble sulfides have not been fully investigated. However, sodium sulfite and sodium thiosulfate are known to interfere in the procedure for soluble sulfides. Sulfur also interferes because it may be reduced to sulfide by tin(II) chloride in this procedure.

3.4 The iodometric method suffers interference from reducing substances that react with iodine, including thiosulfate, sulfite, and various organic compounds.

3.5 The insoluble method should not be used for the determination of soluble sulfides because it can reduce sulfur to sulfide, thus creating a positive interference.

4.0 APPARATUS AND MATERIALS

4.1 Gas evolution apparatus as shown in Figure 1

4.1.1 Three neck flask - 500-mL, 24/40 standard taper joints.

4.1.2 Dropping funnel - 100-mL, 24/40 outlet joint.

4.1.3 Purge gas inlet tube - 24/40 joint, with coarse frit.

4.1.4 Purge gas outlet - 24/40 joint reduced to 1/4 in. tube.

4.1.5 Gas scrubbing bottles - 125-mL, with 1/4 in. o.d. inlet and outlet tubes. Impinger tube must be fritted.

4.1.6 Tubing - 1/4 in. o.d. Teflon or polypropylene. Do not use rubber.

NOTE: When analyzing for acid-insoluble sulfides, the distillation apparatus is identical to that used in the distillation procedure for acid-soluble sulfides except that the tubing and unions downstream of the distillation flask must be all Teflon, polypropylene or other material resistant to gaseous HCl. The ground glass joints should be fitted with Teflon sleeves to prevent seizing and to prevent gas leaks. Pinch clamps should also be used on the joints to prevent leaks.

4.2 Hot plate stirrer.

4.3 pH meter.

4.4 Nitrogen regulator.

4.5 Flowmeter.

4.6 Top-loading balance - capable of weighing 0.1 g.

5.0 REAGENTS

5.1 Reagent grade chemicals shall be used in all tests. Unless otherwise indicated, it is intended that all reagents shall conform to the specifications of the Committee on Analytical Reagents of the American Chemical Society, where such specifications are available. Other grades may be used, provided it is first ascertained that the reagent is of sufficiently high purity to permit its use without lessening the accuracy of the determination.

5.2 Reagent water. All references to water in this method refer to reagent water, as defined in Chapter One.

5.3 Zinc acetate solution for sample preservation (2N), $Zn(CH_3COO)_2 \cdot 2H_2O$. Dissolve 220 g of zinc acetate dihydrate in 500 mL of reagent water.

5.4 Sodium hydroxide (1N), NaOH. Dissolve 40 g of NaOH in reagent water and dilute to 1 liter.

5.5 Formaldehyde (37% solution), CH_2O. This solution is commercially available.

5.6 Zinc acetate for the scrubber

5.6.1 For acid-soluble sulfides: Zinc acetate solution (approximately 0.5M). Dissolve about 110 g zinc acetate dihydrate in 200 mL of reagent water. Add 1 mL hydrochloric acid (concentrated), HCl, to prevent precipitation of zinc hydroxide. Dilute to 1 liter.

5.6.2 For acid-insoluble sulfides: Zinc acetate/sodium acetate buffer. Dissolve 100 g sodium acetate, $NaC_2H_3O_2$, and 11 g zinc acetate dihydrate in 800 mL of reagent water. Add 1 mL concentrated hydrochloric acid and dilute to 1 liter. The resulting pH should be 6.8.

5.7 Acid to acidify the sample

5.7.1 For acid-soluble sulfides: Sulfuric acid (concentrated), H_2SO_4.

5.7.2 For acid-insoluble sulfides: Hydrochloric acid (9.8N), HCl. Place 200 mL of reagent water in a 1-liter beaker. Slowly add concentrated HCl to bring the total volume to 1 liter.

5.8 Starch solution - Use either an aqueous solution or soluble starch powder mixtures. Prepare an aqueous solution as follows. Dissolve 2 g soluble starch and 2 g salicylic acid, $C_7H_6O_3$, as a preservative, in 100 mL hot reagent water.

5.9 Nitrogen.

5.10 Iodine solution (approximately 0.025N)

5.10.1 Dissolve 25 g potassium iodide, KI, in 700 mL of reagent water in a 1-liter volumetric flask. Add 3.2 g iodine, I_2. Allow to dissolve. Add the type and amount of acid specified in Step 7.3.2. Dilute to 1 liter and standardize as follows.

5.10.2 Dissolve approximately 2 g KI in 150 mL of reagent water. Add exactly 20 mL of the iodine solution (Step 5.10.1) to be titrated and dilute to 300 mL with reagent water.

5.10.3 Titrate with 0.025N standardized phenylarsine oxide or 0.025N sodium thiosulfate until the amber color fades to yellow. Add starch indicator solution. Continue titration drop by drop until the blue color disappears.

5.10.4 Run in replicate.

5.10.5 Calculate the normality as follows.

$$\text{Normality } (I_2) = \frac{\text{mL of titrant x normality of titrant}}{\text{sample size in mL}}$$

5.11 Sodium sulfide nonanhydrate, $Na_2S \cdot 9H_2O$. For the preparation of standard solutions to be used for calibration curves. Standards must be prepared at pH > 9 and < 11. Protect standard from exposure to oxygen by preparing it without headspace. These standards are unstable and should be prepared daily.

5.12 Tin(II) chloride, $SnCl_2$, granular.

5.13 Titrant.

5.13.1 Standard phenylarsine oxide solution (PAO) (0.025N), C_6H_5AsO. This solution is commercially available.

CAUTION: PAO is toxic.

5.13.2 Standard sodium thiosulfate solution (0.025N), $Na_2S_2O_3 \cdot 5H_2O$. Dissolve 6.205 ± 0.005 g $Na_2S_2O_3 \cdot 5H_2O$ in 500 mL reagent water. Add 9 mL 1N NaOH and dilute to 1 liter.

5.14 Sodium hydroxide (6N), NaOH. Dissolve 240 g of sodium hydroxide in 1 liter of reagent water.

5.15 Hydrochloric acid (6N), HCl. Place 51 mL of reagent water in a 100 mL Class A volumetric flask. Slowly add concentrated HCl to bring the total volume to 100 mL.

6.0 SAMPLE COLLECTION, PRESERVATION, AND HANDLING

6.1 All samples must have been collected using a sampling plan that addresses the considerations discussed in Chapter Nine of this manual.

6.2 All aqueous samples and effluents must be preserved with zinc acetate and sodium hydroxide. Use four drops of 2N zinc acetate solution per 100 mL of sample. Adjust the pH to greater than 9 with 6N sodium hydroxide solution. Fill the sample bottle completely and stopper with a minimum of aeration. The treated sample is relatively stable and can be held for up to seven days. If high concentrations of sulfide are expected to be in the sample, continue adding zinc acetate until all the sulfide has precipitated. For solid samples, fill the surface of the solid with 2N zinc acetate until moistened. Samples must be cooled to 4°C and stored headspace free.

6.3 Sample Preparation

6.3.1 For an efficient distillation, the mixture in the distillation flask must be of such a consistency that the motion of the stirring bar is sufficient to keep the solids from settling. The mixture must be free of solid objects that could disrupt the stirring bar. Prepare the sample using one of the procedures in this section then proceed with the distillation step (Section 7.0).

6.3.2 If the sample is aqueous, shake the sample container to suspend any solids, then quickly decant the appropriate volume (up to 250 mL) of the sample to a graduated cylinder, weigh the cylinder, transfer to the distillation flask and reweigh the cylinder to the nearest milligram. Be sure that a representative aliquot is used, or use the entire sample.

6.3.3 If the sample is aqueous but contains soft clumps of solid, it may be possible to break the clumps and homogenize the sample by placing the sample container on a jar mill and tumble or roll the sample for a few hours. The slurry may then be aliquotted and weighed as above to the nearest milligram then diluted with reagent water up to a total volume of 250 mL to produce a mixture that is completely suspended by the stirring bar.

6.3.4 If the sample is primarily aqueous, but contains a large proportion of solid, the sample may be roughly separated by phase and the amount of each phase measured and weighed to the nearest milligram into

the distillation flask in proportion to their abundance in the sample. Reagent water may be added up to a total volume of 250 mL. As a guideline, no more than 25 g dry weight or 50 g of sludge can be adequately suspended in the apparatus.

6.3.5 If the sample contains solids which absorb water and swell, limit the sample size to 25 g dry weight. Otherwise, the solids will restrict the fluid motion and lower the recovery.

6.3.6 If the sample contains solid objects that cannot be reduced in size by tumbling, the solids must be broken manually. Clay-like solids should be cut with a spatula or scalpel in a crystallizing dish. If the solids can be reduced to a size that they can be suspended by the stirring bar, the solid and liquid can be proportionately weighed.

6.3.7 Non-porous harder objects, for example stones or pieces of metal, may be weighed and discarded. The percent weight of non-porous objects should be reported and should be used in the calculation of sulfide concentration if it has a significant effect on the reported result.

7.0 PROCEDURE

For acid-soluble sulfide samples, go to 7.1
For acid-insoluble sulfide samples, go to 7.2

7.1 Acid-Soluble Sulfide

7.1.1 In a preliminary experiment, determine the approximate amount of sulfuric acid required to adjust a measured amount of the sample to pH less than or equal to 1. The sample size should be chosen so that it contains between 0.2 and 50 mg of sulfide. Place a known amount of sample or sample slurry in a beaker. Add reagent water until the total volume is 200 mL. Stir the mixture and determine the pH. Slowly add sulfuric acid until the pH is less than or equal to 1. Discard this preliminary sample.

<u>CAUTION</u>: Toxic hydrogen sulfide may be generated from the acidified sample. This operation must be performed in the hood and the sample left in the hood until the sample has been made alkaline or the sulfide has been destroyed. From the amount of sulfuric acid required to acidify the sample and the mass or volume of the sample acidified, calculate the amount of acid required to acidify the sample to be placed in the distillation flask.

7.1.2 Prepare the gas evolution apparatus as shown in Figure 1 in a fume hood.

7.1.2.1 Prepare a hot water bath at 70°C by filling a crystallizing dish or other suitable container with water and place it on a hot plate stirrer. Place a thermometer in the bath and monitor the temperature to maintain the bath at 70°C.

7.1.2.2 Assemble the three neck 500-mL flask, fritted gas inlet tube, and exhaust tube. Use Teflon sleeves to seal the ground glass joints. Place a Teflon coated stirring bar into the flask.

7.1.2.3 Place into each gas scrubbing bottle 10 ± 0.5 mL of the 0.5M zinc acetate solution, 5.0 ± 0.1 mL of 37% formaldehyde and 100 ± 5.0 mL reagent water.

7.1.2.4 Connect the gas evolution flask and gas scrubbing bottles as shown in Figure 1. Secure all fittings and joints.

7.1.3 Carefully place an accurately weighed sample which contains 0.2 to 50 mg of sulfide into the flask. If necessary, dilute to approximately 200 mL with reagent water.

7.1.4 Place the dropping funnel onto the flask making sure its stopcock is closed. Add the volume of sulfuric acid calculated in Step 7.1.1 plus an additional 50 mL into the dropping funnel. The bottom stopcock must be closed.

7.1.5 Attach the nitrogen inlet to the top of the dropping funnel gas shut-off valve. Turn on the nitrogen purge gas and adjust the flow through the sample flask to 25 mL/min. The nitrogen in the gas scrubbing bottles should bubble at about five bubbles per second. Nitrogen pressure should be limited to approximately 10 psi to prevent excess stress on the glass system and fittings. Verify that there are no leaks in the system. Open the nitrogen shut-off valve leading to the dropping funnel. Observe that the gas flow into the sample vessel will stop for a short period while the pressure throughout the system equalizes. If the gas flow through the sample flask does not return within a minute, check for leaks around the dropping funnel. Once flow has stabilized, turn on magnetic stirrer. Purge system for 15 minutes with nitrogen to remove oxygen.

7.1.6 Heat sample to 70°C. Open dropping funnel to a position that will allow a flow of sulfuric acid of approximately 5 mL/min. Monitor the system until most of the sulfuric acid within the dropping funnel has entered the sample flask. Solids which absorb water and swell will restrict fluid motion and, therefore, lower recovery will be obtained. Such samples should be limited to 25 g dry weight.

7.1.7 Purge, stir, and maintain a temperature of 70°C for a total of 90 minutes from start to finish. Shut off nitrogen supply. Turn off heat.

7.1.8 Proceed to Step 7.3 for the analysis of the zinc sulfide by titration.

7.2 Acid-Insoluble Sulfide

7.2.1 As the concentration of HCl during distillation must be within a narrow range for successful distillation of H_2S, the water content must be controlled. It is imperative that the final concentration of HCl in the distillation flask be about 6.5N and that the sample is mostly suspended in the fluid by the action of the stirring bar. This is achieved by adding 50 mL of reagent water, including water in the sample, 100 mL of 9.8N HCl, and the sample to the distillation flask. Solids which absorb water and swell will restrict fluid motion and, therefore, lower recovery will be obtained. Such samples should be limited to 25 g dry weight. Other samples can range from 25 to 50 g.

7.2.2 If the matrix is a dry solid, weigh a portion of the sample such that it contains 0.2 to 50 mg of sulfide. The solid should be crushed to reduce particle size to 1 mm or less. Add 50 mL of reagent water.

7.2.3 If the matrix is aqueous, then a maximum of 50 g of the sample may be used. No additional water may be added. As none of the target compounds are volatile, drying the sample may be preferable to enhance the sensitivity by concentrating the sample. If less than 50 g of the sample is required to achieve the 0.2 to 50 mg of sulfide range for the test, then add reagent water to a total volume of 50 mL.

7.2.4 If the matrix is a moist solid, the water content of the sample must be determined (Karl Fischer titration, loss on drying, or other suitable means) and the water in the sample included in the total 50 mL of water needed for the correct HCl concentration. For example, if a 20 g sample weight is needed to achieve the desired sulfide level of 0.2 to 50 mg and the sample is 50% water then 40 mL rather than 50 mL of reagent water is added along with the sample and 100 mL of 9.8N HCl to the distillation flask.

7.2.5 Weigh the sample and 5 g $SnCl_2$ into the distillation flask. Use up to 50 mL of reagent water, as calculated above, to rinse any glassware.

7.2.6 Assemble the distillation apparatus as in Figure 1. Place 100 $\pm$ 2.0 mL of zinc acetate/sodium acetate buffer solution and 5.0 $\pm$ 0.1 mL of 37% formaldehyde in each gas scrubbing bottle. Tighten the pinch clamps on the distillation flask joints.

7.2.7 Make sure the stopcock is closed and then add 100 $\pm$ 1.0 mL of 9.8N HCl to the dropping funnel. Connect the nitrogen line to the top of the funnel and turn the nitrogen on to pressurize the dropping funnel headspace.

7.2.8 Set the nitrogen flow at 25 mL/min. The nitrogen in the gas scrubbing bottles should bubble at about five bubbles per second. Purge the oxygen from the system for about 15 minutes.

7.2.9 Turn on the magnetic stirrer. Set the stirring bar to spin as fast as possible. The fluid should form a vortex. If not, the distillation will exhibit poor recovery. Add all of the HCL from the dropping funnel to the flask.

7.2.10 Heat the water bath to the boiling point (100°C). The sample may or may not be boiling. Allow the purged distillation to proceed for 90 minutes at 100°C. Shut off nitrogen supply. Turn off heat.

7.2.11 Proceed to Step 7.3 for the analysis of the zinc sulfide by titration.

7.3 Titration of Distillate

7.3.1 Pipet a known amount of standardized 0.025N iodine solution (See Step 5.10.5) in a 500-mL flask, adding an amount in excess of that needed to oxidize the sulfide. Add enough reagent water to bring the volume to 100 mL. The volume of standardized iodine solution should be about 65 mL for samples with 50 mg of sulfide.

7.3.2 If the distillation for acid-soluble sulfide is being used, add 2 mL of 6N HCl. If the distillation for acid-insoluble sulfides is performed, 10 mL of 6N HCl should be added to the iodine.

7.3.3 Pipet both of the gas scrubbing bottle solutions to the flask, keeping the end of the pipet below the surface of the iodine solution. If at any point in transferring the zinc acetate solution or rinsing the bottles, the amber color of the iodine disappears or fades to yellow, more 0.025N iodine must be added. This additional amount must be added to the amount from Step 7.3.1 for calculations. Record the total volume of standardized 0.025N iodine solution used.

7.3.4 Prepare a rinse solution of a known amount of standardized 0.025N iodine solution, 1 mL of 6N HCl, and reagent water to rinse the remaining white precipitate (zinc sulfide) from the gas scrubbing bottles into the flask. There should be no visible traces of precipitate after rinsing.

7.3.5 Rinse any remaining traces of iodine from the gas scrubbing bottles with reagent water, and transfer the rinsate to the flask.

7.3.6 Titrate the solution in the flask with standard 0.025N phenylarsine oxide or 0.025N sodium thiosulfate solution until the amber color fades to yellow. Add enough starch indicator for the solution to turn dark blue and titrate until the blue disappears. Record the volume of titrant used.

7.3.7 Calculate the concentration of sulfide using the following equation:

$$\frac{(\text{mL } I_2 \times N\ I_2) - (\text{mL titrant} \times \text{N titrant}) \times \left(\frac{32.06\ g}{2\ eq.}\right)}{\text{sample weight (kg) or sample volume (L)}} = \text{sulfide (mg/kg) or (mg/L)}$$

8.0 QUALITY CONTROL

8.1 All quality control data must be maintained and available for reference or inspection for a period of three years. This method is restricted to use by or under supervision of experienced analysts. Refer to the appropriate section of Chapter One for additional quality control guidelines.

8.2 A reagent blank should be run once in twenty analyses or per analytical batch, whichever is more frequent.

8.3 Check standards are prepared from water and a known amount of sodium sulfide. A check standard should be run with each analytical batch of samples, or once in twenty samples. Acceptable recovery will depend on the level and matrix.

8.4 A matrix spiked sample should be run for each analytical batch or twenty samples, whichever is more frequent, to determine matrix effects. If recovery is low, acid-insoluble sulfides are indicated. A matrix spiked sample is a sample brought through the whole sample preparation and analytical process.

9.0 METHOD PERFORMANCE

9.1 Accuracy - Accuracy for this method was determined by three independent laboratories by measuring percent recoveries of spikes for both clean matrices (water) and actual waste samples. The results are summarized below.

<u>For Acid-Soluble Sulfide</u>

Accuracy of titration step only
- Lab A 84-100% recovery
- Lab B 110-122% recovery

Accuracy for entire method for clean matrices (H_2O)
- Lab C 94-106% recovery

Accuracy of entire method for actual waste samples
- Lab C 77-92% recovery

Spiking levels ranged from 0.4 to 8 mg/L

<u>For Acid-Insoluble Sulfide</u>

The percent recovery was not as thoroughly studied for acid-insoluble sulfide as it was for acid-soluble sulfide.

Accuracy of entire method for synthetic waste samples
Lab C 21-81% recovery

Spiking levels ranged from 2.2 to 22 mg/kg

9.2 Precision

For Acid-Soluble Sulfide

Precision of titration step only
Lab A CV% 2.0 to 37
Lab B CV% 1.1 to 3.8
Precision of entire method for clean matrices (H_2O)
Lab C CV% 3.0 to 12
Precision of entire method for actual waste samples
Lab C CV% 0.86 to 45

For Acid-Insoluble Sulfide

Precision of entire method with synthetic wastes
Lab C CV 1.2 to 42

9.3 Detection Limit - The detection limit was determined by analyzing seven replicates at 0.45 and 4.5 mg/L. The detection limit was calculated as the standard deviation times the student's t-value for a one-tailed test with n-1 degrees of freedom at 99% confidence level. The detection limit for a clean matrix (H_2O) was found to be between 0.2 and 0.4 mg/L.

10.0 REFERENCES

1. Test Methods for Evaluating Solid Waste, Physical/Chemical Methods, 2nd ed.; U.S. Environmental Protection Agency. Office of Solid Waste and Emergency Response. U.S. Government Printing Office: Washington, DC, 1982, revised 1984; SW-846.

2. Methods for Chemical Analysis of Water and Wastes; U.S. Environmental Protection Agency. Office of Research and Development. Environmental Monitoring and Support Laboratory. ORD Publication Offices of Center for Environmental Research Information: Cincinnati, OH, 1979; EPA-600/4-79-020.

3. CRC Handbook of Chemistry and Physics, 66th ed.; Weast, R., Ed.; CRC: Boca Raton, FL, 1985.

4. Standard Methods for the Examination of Water and Wastewater, 16th ed.; Greenberg, A.E.; Trussell, R.R.; Clesceri, L.S., Eds.; American Water Works Association, Water Pollution Control Federation, American Public Health Association: Washington, DC, 1985; Methods 427, 427A, 427B, and 427D.

5. Andreae, M.O.; Banard, W.R. Anal. Chem. 1983, 55, 608-612.

6. Barclay, H. Adv. Instrum. 1980, 35(2), 59-61.

7. Bateson, S.W.; Moody, G.J.; Thomas, J.P.R. Analyst 1986, 111, 3-9.

8. Berthage, P.O. Anal. Chim. Acta 1954, 10 310-311.

9. Craig, P.J.; Moreton, P.A. Environ. Technol. Lett. 1982, 3, 511-520.

10. Franklin, G.O.; Fitchett, A.W. Pulp & Paper Canada 1982, 83(10), 40-44.

11. Fuller, W. In Cyanide in the Environment; Van Zyl, D., Ed.; Proceedings of Symposium; December, 1984.

12. Gottfried, G.J. "Precision, Accuracy, and MDL Statements for EPA Methods 9010, 9030, 9060, 7520, 7521, 7550, 7551, 7910, and 7911"; final report to the U.S. Environmental Protection Agency (EMSL-CI); Biopheric.

13. Kilroy, W.P. Talanta 1983, 30(6), 419-422.

14. Kurtenacher, V.A.; Wallak, R. Z. Anorg. U. Allg. Chem. 1927, 161 202-209.

15. Landers, D.H.; David, M.B.; Mitchell, M.J. Int. J. Anal. Chem 1983, 14, 245-256.

16. Opekar, F.; Brukenstein, S. Anal. Chem. 1984, 56, 1206-1209.

17. Ricklin, R.D.; Johnson, E.L. Anal. Chem. 1983, 55, 4.

18. Rohrbough, W.G.; et al. Reagent Chemicals, American Chemical Society Specifications, 7th ed.; American Chemical Society: Washington, DC, 1986.

19. Snedecor, G.W.; Ghran, W.G. Statistical Methods; Iowa State University: Ames, IA, 1980.

20. Umaña, M.; Beach, J.; Sheldon, L. "Revisions to Method 9010"; final report to the U.S. Environmental Protection Agency on Contract No. 68-01-7266; Research Triangle Institute: Research Triangle Park, NC, 1986; Work Assignment No. 1.

21. Umaña, M.; Sheldon, L. "Interim Report: Literature Review"; interim report to the U.S. Environmental Protection Agency in Contract No. 68-01-7266; Research Triangle Institute: Research Triangle Park, NC, 1986; Work Assignment No. 3.

22. Wang, W.; Barcelona, M.J. Environ. Inter. 1983, 9, 129-133.

23. Wronski, M. Talanta 1981, 28, 173-176.

24. Application Note 156; Princeton Applied Research Corp.: Princeton, NJ.

25. Guidelines for Assessing and Reporting Data Quality for Environmental Measurements; U.S. Environmental Protection Agency. Office of Research and Development. U.S. Government Printing Office: Washington, DC, 1983.

26. Fed. Regist. 1980, 45(98), 33122.

27. The Analytical Chemistry of Sulfur and Its Compounds, Part I; Karchmer, J.H., Ed.; Wiley-Interscience: New York, 1970.

28. Methods for the Examination of Water and Associated Materials; Department of the Environment: England, 1983.

29. "Development and Evaluation of a Test Procedure for Reactivity Criteria for Hazardous Waste"; final report to the U.S. Environmental Protection Agency on Contract 68-03-2961; EAL: Richmond, CA.

30. Test Method to Determine Hydrogen Sulfide Released from Wastes; U.S. Environmental Protection Agency. Office of Solid Waste. Preliminary unpublished protocol, 1985.

31. 1985 Annual Book of ASTM Standards, Vol. 11.01; "Standard Specification for Reagent Water"; ASTM: Philadelphia, PA, 1985; D1193-77.

FIGURE 1.
GAS EVOLUTION APPARATUS

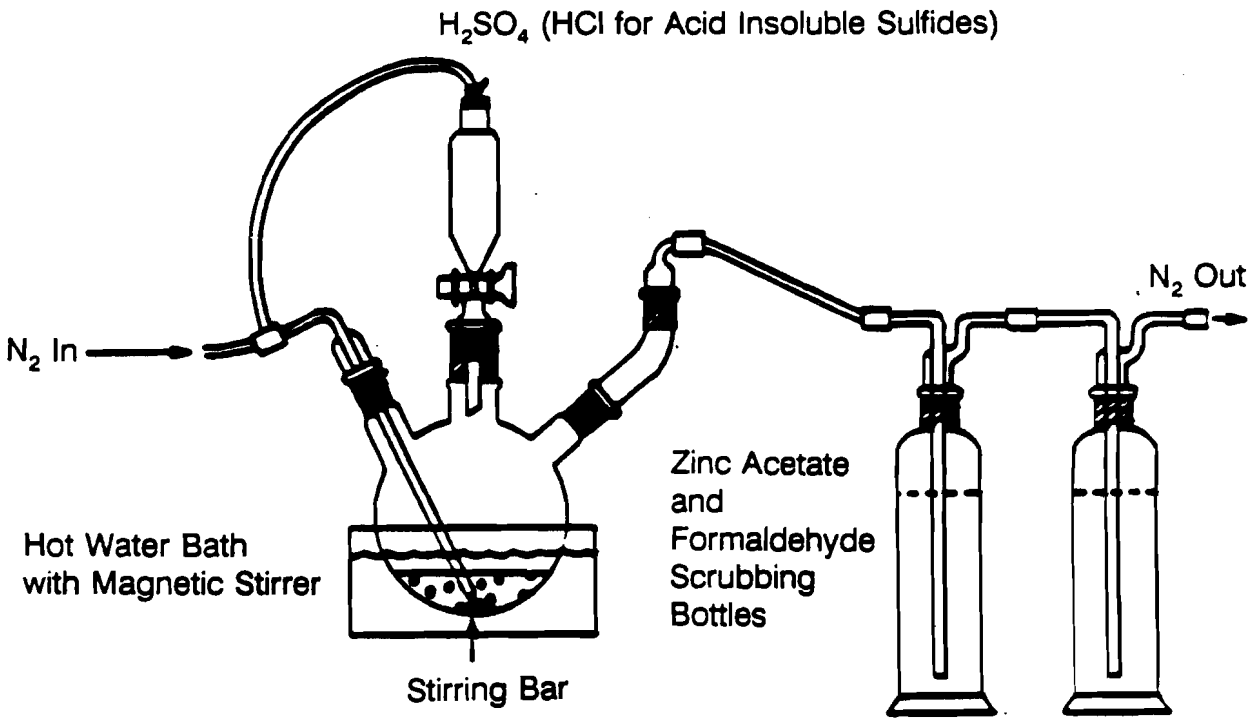

METHOD 9030A
ACID-SOLUBLE AND ACID-INSOLUBLE SULFIDES

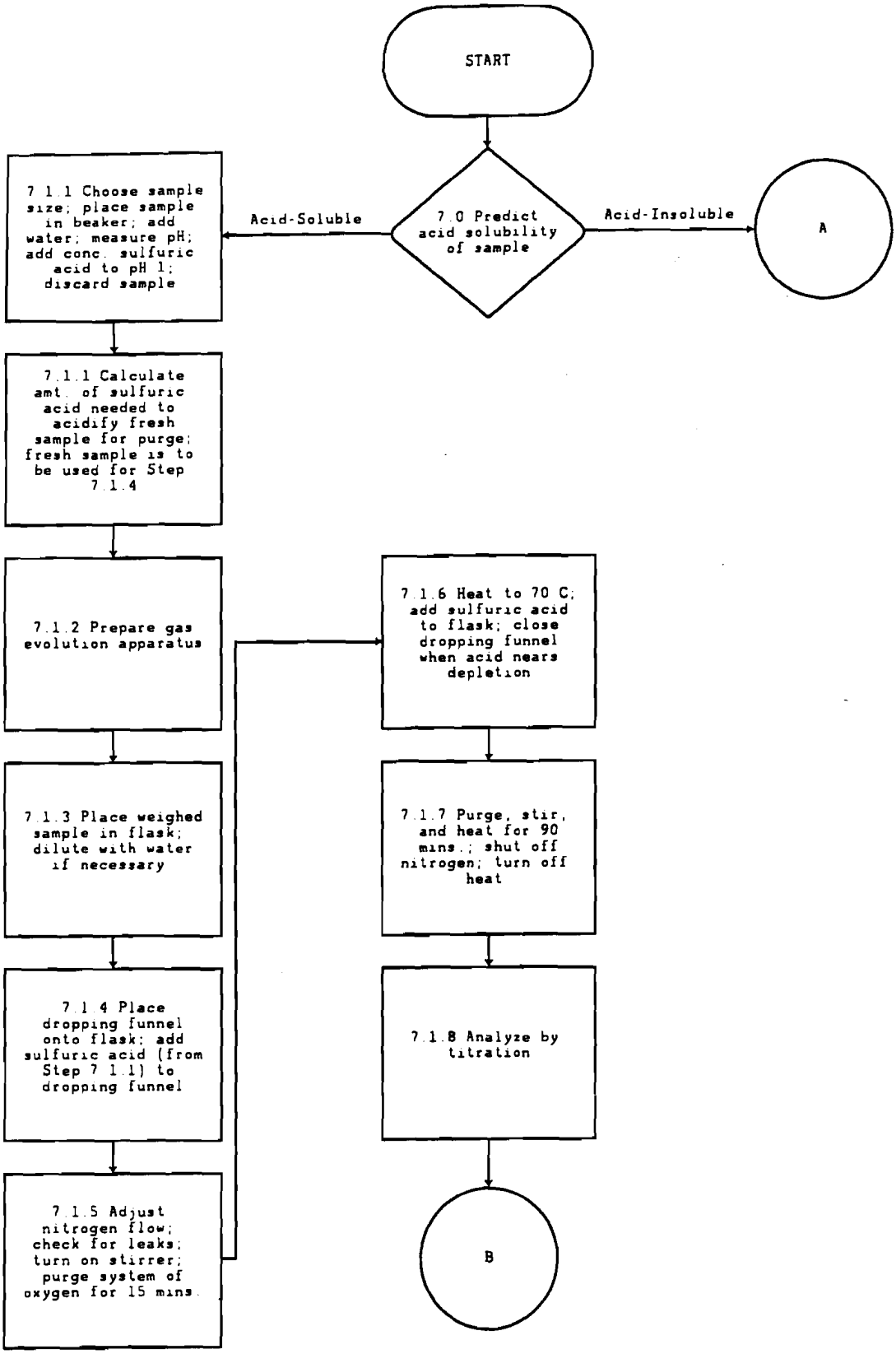

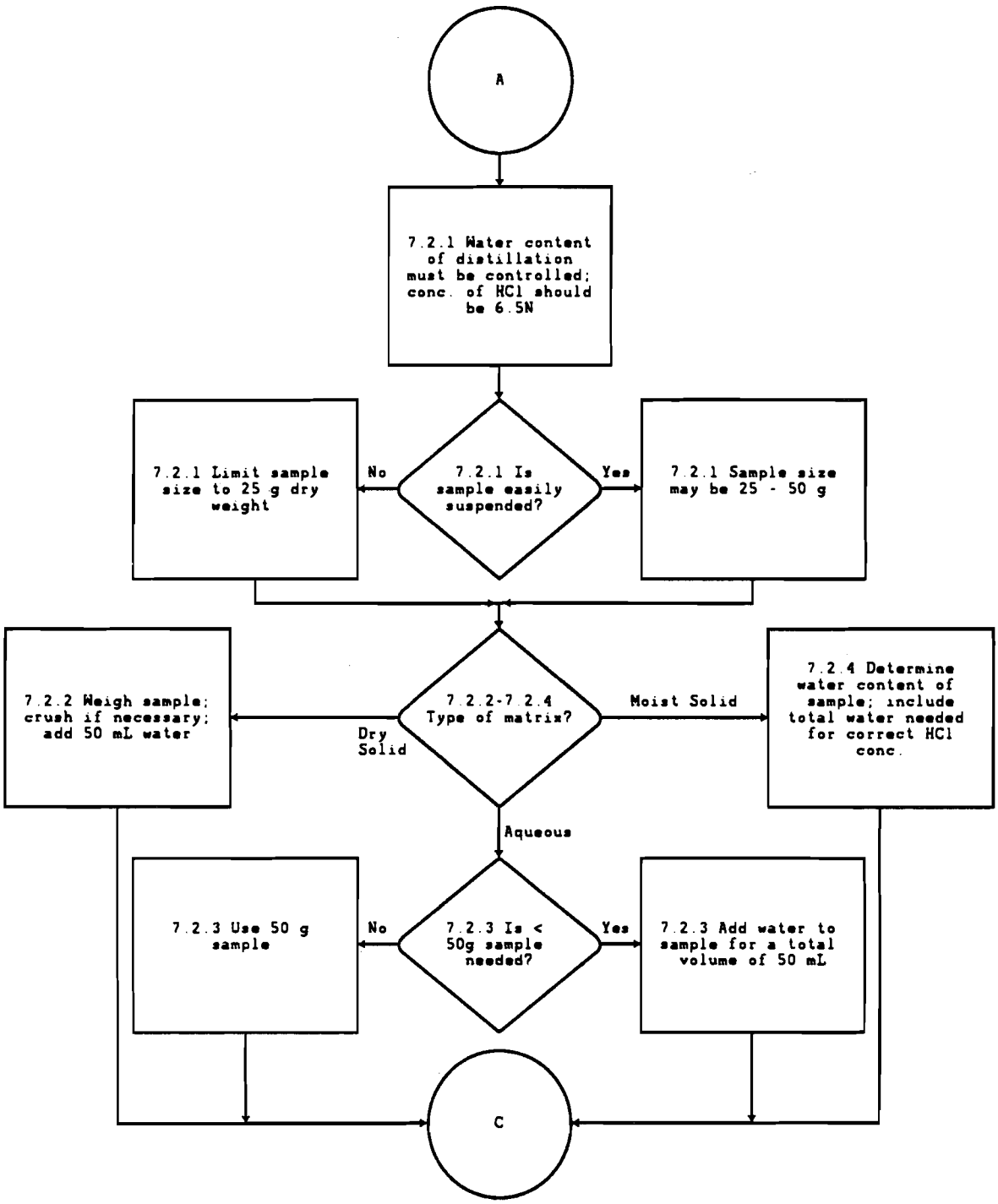
A
7.2.1 Water content of distillation must be controlled; conc. of HCl should be 6.5N
7.2.1 Is sample easily suspended?
No
7.2.1 Limit sample size to 25 g dry weight
Yes
7.2.1 Sample size may be 25 - 50 g
7.2.2-7.2.4 Type of matrix?
Dry Solid
7.2.2 Weigh sample; crush if necessary; add 50 mL water
Moist Solid
7.2.4 Determine water content of sample; include total water needed for correct HCl conc.
Aqueous
7.2.3 Is < 50g sample needed?
No
7.2.3 Use 50 g sample
Yes
7.2.3 Add water to sample for a total volume of 50 mL
C

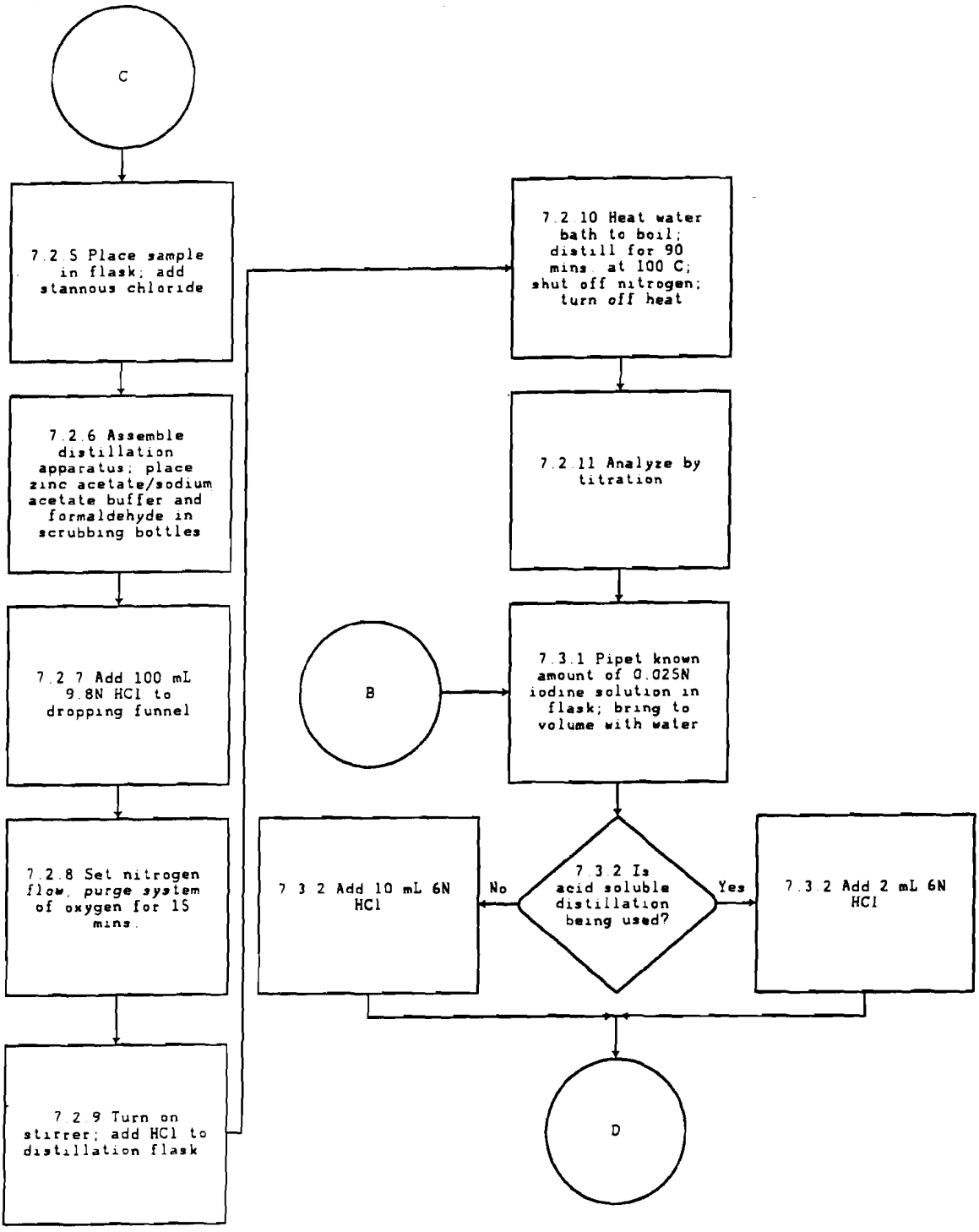
C
7.2.5 Place sample in flask; add stannous chloride
7.2.6 Assemble distillation apparatus; place zinc acetate/sodium acetate buffer and formaldehyde in scrubbing bottles
7.2.7 Add 100 mL 9.8N HCl to dropping funnel
7.2.8 Set nitrogen flow, purge system of oxygen for 15 mins.
7.2.9 Turn on stirrer; add HCl to distillation flask
7.2.10 Heat water bath to boil; distill for 90 mins. at 100 C; shut off nitrogen; turn off heat
7.2.11 Analyze by titration
B
7.3.1 Pipet known amount of 0.025N iodine solution in flask; bring to volume with water
7.3.2 Is acid soluble distillation being used?
No
Yes
7.3.2 Add 10 mL 6N HCl
7.3.2 Add 2 mL 6N HCl
D

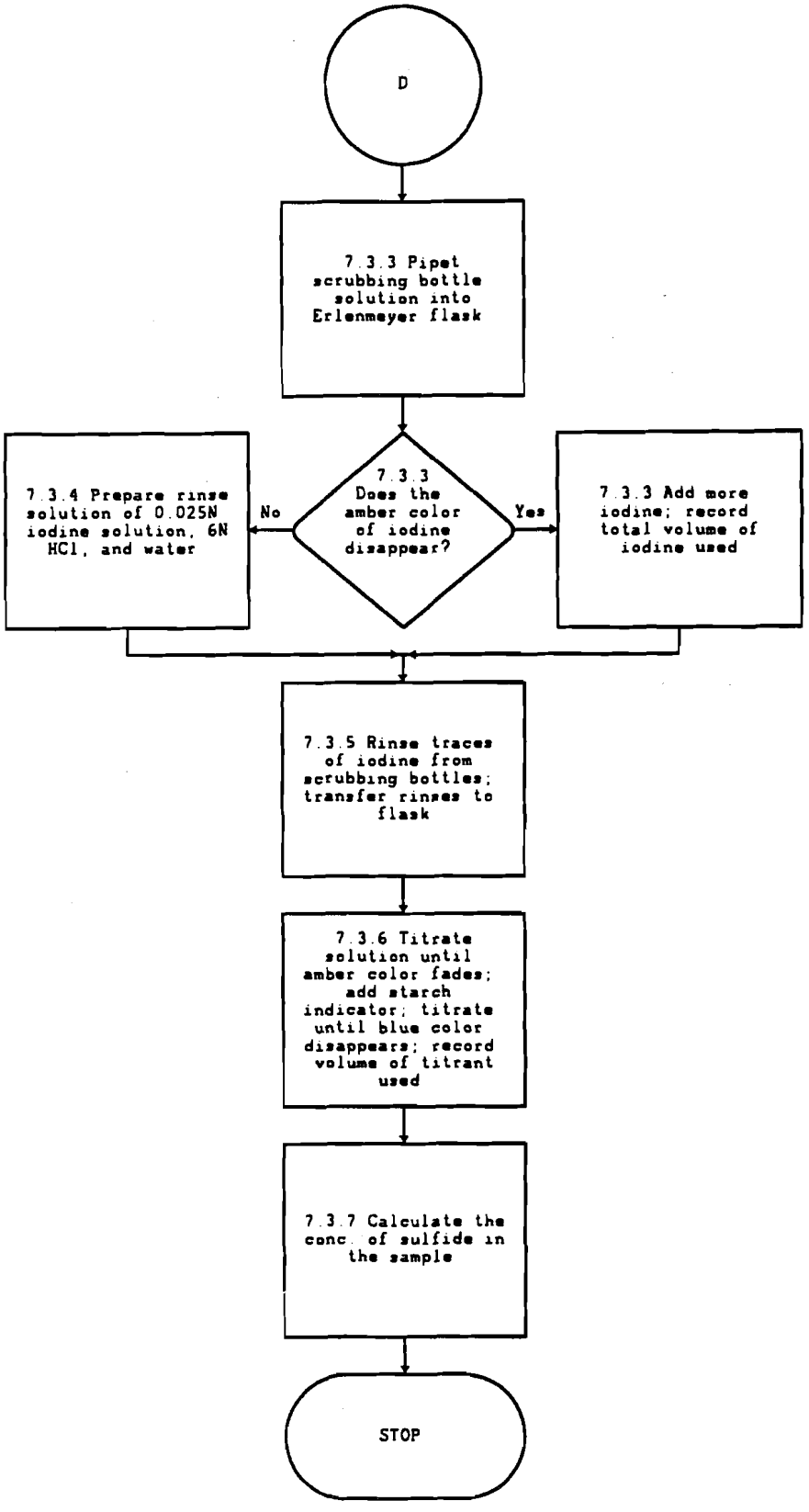
D
7.3.3 Pipet scrubbing bottle solution into Erlenmeyer flask
7.3.3 Does the amber color of iodine disappear?
No
Yes
7.3.4 Prepare rinse solution of 0.025N iodine solution, 6N HCl, and water
7.3.3 Add more iodine; record total volume of iodine used
7.3.5 Rinse traces of iodine from scrubbing bottles; transfer rinses to flask
7.3.6 Titrate solution until amber color fades; add starch indicator; titrate until blue color disappears; record volume of titrant used
7.3.7 Calculate the conc. of sulfide in the sample
STOP

METHOD 9031

EXTRACTABLE SULFIDES

1.0 SCOPE AND APPLICATION

1.1 The extraction procedure described in this method is designed for the extraction of sulfides from matrices that are not directly amenable to the distillation procedure Method 9030. Specifically, this method is designed for the extraction of soluble sulfides. This method is applicable to oil, solid, multiphasic, and all other matrices not amenable to analysis by Method 9030. This method is not applicable for reactive sulfide. Refer to Chapter Seven for the determination of reactive sulfide.

1.2 Method 9031 is suitable for measuring sulfide in solid samples at concentrations above 1 mg/kg.

2.0 SUMMARY OF METHOD

2.1 If the sample contains solids that will interfere with agitation and homogenization of the sample mixture, or so much oil or grease as to interfere with the formation of a homogeneous emulsion in the distillation procedure, the sample may be filtered and the solids extracted with water at pH > 9 and < 11. The extract is then combined with the filtrate and analyzed by the distillation procedure. Separation of sulfide from the sample matrix is accomplished by the addition of sulfuric acid to the sample. The sample is heated to 70°C and the hydrogen sulfide (H_2S) which is formed is distilled under acidic conditions and carried by a nitrogen stream into zinc acetate gas scrubbing bottles where it is precipitated as zinc sulfide.

2.2 The sulfide in the zinc sulfide precipitate is oxidized to sulfur with a known amount of excess iodine. Then the excess iodine is determined by titration with a standard solution of phenylarsine oxide (PAO) or sodium thiosulfate until the blue iodine starch complex disappears. The use of standard sulfide solutions is not possible because of their instability to oxidative degradation. Therefore quantitation is based on the PAO or sodium thiosulfate.

3.0 INTERFERENCES

3.1 Samples with aqueous layers must be taken with a minimum of aeration to avoid volatilization of sulfide or reaction with oxygen which oxidizes sulfide to sulfur compounds that are not detected.

3.2 Sulfur compounds such as sulfite and hydrosulfite decompose in acid and may form sulfur dioxide. This gas may be carried over to the zinc acetate gas scrubbing bottles and subsequently react with the iodine solution yielding false high values. The addition of formaldehyde into the zinc acetate gas scrubbing bottles removes this interference. Any sulfur dioxide entering the scrubber will form an addition compound with the formaldehyde which is unreactive towards the iodine in the acidified mixture. This method shows no sensitivity to sulfite or hydrosulfite at concentrations up to 10 mg/kg of the interferant.

3.3 The iodometric method suffers interference from reducing substances that react with iodine including thiosulfate, sulfite, and various organic compounds.

3.4 Interferences have been observed when analyzing samples with high metal content such as electroplating waste and chromium containing tannery waste.

4.0 APPARATUS AND MATERIALS

4.1 Extractor - Any suitable device that sufficiently agitates a sealed container of one liter volume or greater. For the purpose of this analysis, agitation is sufficient when:

1. All sample surfaces are continuously brought into contact with extraction fluid, and

2. The agitation prevents stratification of the sample and fluid.

Examples of suitable extractors are shown in Figures 2 and 3. The tumble-extractors turn the extraction bottles end-over-end at a rate of about 30 rpm. The apparatus in Figure 2 may be easily fabricated from plywood. The jar compartments must be padded with polyurethane foam to absorb shock. The drive apparatus is a Norton jar mill.

4.2 Buchner funnel apparatus

4.2.1 Buchner funnel - 500-mL capacity, with 1-liter vacuum filtration flask.

4.2.2 Glass wool - Suitable for filtering, 0.8 m diameter such as Corning Pyrex 3950.

4.2.3 Vacuum source - Preferably a water driven aspirator. A valve or stopcock to release vacuum is required.

4.3 Gas Evolution apparatus as shown in Figure 1

4.3.1 Three neck flask - 500-mL, 24/40 standard tapered joints.

4.3.2 Dropping funnel - 100-mL, 24/40 outlet joint.

4.3.3 Purge gas inlet tube - 24/40 joint with course frit.

4.3.4 Purge gas outlet - 24/40 joint reduced to 1/4 inch tube.

4.3.5 Gas scrubbing bottles - 125-mL, with 1/4 in. o.d. inlet and outlet tubes. Impinger tube must not be fritted.

4.3.6 Tubing - 1/4 in. o.d. Teflon or polypropylene. Do not use rubber.

4.4 Hot plate stirrer.

4.5 pH meter.

4.6 Nitrogen regulator.

4.7 Flowmeter.

4.8 Separatory funnels - 500-mL.

4.9 Tumbler - See Figures 2 and 3.

4.10 Top-loading balance - capable of weighing 0.1 g.

5.0 REAGENTS

5.1 Reagent grade chemicals shall be used in all tests. Unless otherwise indicated, it is intended that all reagents shall conform to the specifications of the Committee on Analytical Reagents of the American Chemical Society, where such specifications are available. Other grades may be used, provided it is first ascertained that the reagent is of sufficiently high purity to permit its use without lessening the accuracy of the determination.

5.2 Reagent water. All references to water in this method refer to reagent water, as defined in Chapter One.

5.3 Zinc acetate (for sample preservation) (2N), $Zn(CH_3COO)_2 \bullet 2H_2O$. Dissolve 220 g of zinc acetate dihydrate in 500 mL of water.

5.4 Sodium hydroxide (50% w/v in water), NaOH. Commercially available.

5.5 Tin (II) chloride, $SnCl_2 \bullet 2H_2O$, granular.

5.6 n-Hexane, C_6H_{14}.

5.7 Nitrogen, N_2.

5.8 Sulfuric acid (concentrated), H_2SO_4.

5.9 Zinc acetate for the scrubber (approximately 0.5M). Dissolve 110 g zinc acetate dihydrate in 200 mL of water. Add 1 mL concentrated hydrochloric acid, HCl, to prevent precipitation of zinc hydroxide. Dilute to 1 liter.

5.10 Formaldehyde (37% solution), CH_2O. Commercially available.

5.11 Starch solution. Use either an aqueous solution or soluble starch powder mixtures. Prepare an aqueous solution as follows. Dissolve 2 g soluble starch and 2 g salicylic acid, $C_7H_6O_3$, as a preservative, in 100 mL hot water.

5.12 Iodine solution (approximately 0.025N). Dissolve 25 g of potassium iodide, KI, in 700 mL of water in a 1-liter volumetric flask. Add 3.2 g of iodine, I_2. Allow to dissolve. Dilute to 1 liter and standardize as follows. Dissolve approximately 2 g KI in 150 mL of water. Pipet exactly 20 mL of the iodine solution to be titrated and dilute to 300 mL with water. Titrate with 0.025N standard phenylarsine oxide, or 0.025N sodium thiosulfate, $Na_2S_2O_3$, until the amber color fades. Add starch indicator solution until the solution turns

deep blue. Continue titration drop by drop until the blue color disappears. Run in replicate. Calculate the normality as follows:

$$\text{Normality } (I_2) = \frac{\text{mL of titrant x normality of titrant}}{\text{Volume of sample (mL)}}$$

5.13 Sodium sulfide nonanhydrate $Na_2S \bullet 9H_2O$, for the preparation of standard solutions to be used for calibration curves. Standards must be prepared at pH > 9 and < 11.

5.14 Titrant.

5.14.1 Standard phenylarsine oxide (PAO) solution (0.025N), C_6H_5AsO. This solution is commercially available.

CAUTION: PAO is toxic.

5.14.2 Standard sodium thiosulfate solution (0.025N), $Na_2S_2O_3 \bullet 5H_2O$. Dissolve 6.205 ± 0.005 g $Na_2S_2O_3 \bullet 5H_2O$ in 500 mL of water. Add 9 mL 1N NaOH and dilute to 1 liter.

6.0 SAMPLE COLLECTION, PRESERVATION, AND HANDLING

6.1 All samples must have been collected using a sampling plan that addresses the considerations discussed in Chapter Nine of this manual.

6.2 All samples must be preserved with zinc acetate and sodium hydroxide. Use four drops of 2N zinc acetate solution per 100 mL of aqueous or multiphasic sample. Adjust the pH to greater than 9.0 with 50% NaOH. Fill the sample bottle completely and stopper with a minimum of aeration. For solid samples, fill the surface of solid with 2N zinc acetate until moistened. Samples must be cooled to 4°C during storage.

7.0 PROCEDURE

7.1 Assemble the Buchner funnel apparatus. Unroll the glass wool and fold the fiber over itself several times to make a pad about 1 cm thick when lightly compressed. Cut the pad to fit the Buchner funnel. Dry and weigh the pad, then place it in the funnel. Turn on the aspirator and wet the pad with a known amount of water.

7.2 Transfer a sample that contains between 1 and 50 mg of sulfide to the Buchner funnel. Rinse the sample container with known amounts of water and add the rinses to the Buchner funnel. When no free water remains in the funnel, slowly open the stopcock to allow air to enter the vacuum flask. A small amount of sediment may have passed through the glass fiber pad. This will not interfere with the analysis.

7.3 Transfer the solid and the glass fiber pad to a dried tared weighing dish. Since most greases and oils will not pass through the fiber pad, solids, oils, and greases will be extracted together. If the filtrate includes an oil phase, transfer the filtrate to a separatory funnel. Collect and measure the volume of the aqueous phase. Transfer the oil phase to the weighing dish with the solid and glass fiber pad.

7.4 Weigh the dish containing solid, oil (if any), and glass fiber pad. Subtract the weight of the dry glass fiber pad. Calculate the volume of water present in the original sample by subtracting the total volume of rinses from the measured volume of the filtrate.

7.5 Place the following in a 1-liter wide-mouth bottle:

500 mL water
5 mL 50% w/v NaOH
1 g $SnCl_2 \cdot 2H_2O$
50 mL n-hexane (if an oil or grease is present).

Cap the bottle with a Teflon or polyethylene lined cap and shake vigorously to saturate the solution with stannous chloride. Direct a stream of nitrogen gas at about 10 mL/min into the bottle for about 1 minute to purge the headspace of oxygen. If the weight of the solids (Step 7.4) is greater than 25 g, weigh out a representative aliquot of 25 g and add it to the bottle while still purging with nitrogen. Otherwise, add all of the solids. Cap the bottle; avoid the influx of air.

7.6 The pH of the extract must be maintained at > 9 or < 11 throughout the extraction step and subsequent filtration. Since some samples may release acid, the pH must be monitored as follows. Shake the extraction bottle and wait 1 minute. Open the bottle under a stream of nitrogen and check the pH. If the pH is below 9, add 50% NaOH in 5 mL increments until it is at least 9. Recap the bottle, and repeat the procedure until the pH does not drop. The bottle must be thoroughly purged of oxygen before each recapping. Oxygen will oxidize sulfide to elemental sulfur or other sulfur containing compounds that will not be detected.

7.7 Place the bottle in the tumbler, making sure there is enough foam insulation to cushion the bottle. Turn the tumbler on and allow the extraction to run for about 18 hours.

7.8 Prepare a Buchner funnel apparatus as in Step 7.1 with a glass fiber pad filter.

7.9 Decant the extract to the Buchner funnel.

7.10 If the extract contains an oil phase, separate the aqueous phase using a separatory funnel. Neither the separation nor the filtration are critical, but are necessary to be able to measure the volume of the aqueous extract analyzed. Small amounts of suspended solids and oil emulsions will not interfere with the extraction.

7.11 At this point, an aliquot of the filtrate of the original sample may be combined with an aliquot of the extract in a proportion representative of the sample. Calculate the proportions as follows:

$$\frac{\text{Aliquot of the Filtrate(mL)}}{\text{Aliquot of the Extract(mL)}} = \frac{\text{Solid Extracted(g)}^{a}}{\text{Total Solid(g)}^{b}} \times \frac{\text{Total Sample Filtrate(mL)}^{c}}{\text{Total Extraction Fluid(mL)}^{d}}$$

[a]From Step 7.5. Weight of solid sample used for extraction.

[b]From Step 7.4. Weight of solids and oil phase with the dry weight of filter and tared dish subtracted.

[c]Includes volume of all rinses added to the filtrate (Steps 7.1 and 7.2).

[d]500 mL water plus total volume of NaOH solution. Does not include hexane, which is subsequently removed (Step 7.10).

Alternatively, the samples may be distilled and analyzed separately, concentrations for each phase reported separately, and the amounts of each phase present in the sample reported separately.

7.12 Distillation of Sulfide

7.12.1 In a preliminary experiment, determine the approximate amount of sulfuric acid required to adjust a measured amount of the sample to pH less than or equal to 1. The sample size should be chosen so that it contains between 1.0 and 50 mg of sulfide. Place a known amount of sample or sample slurry in a beaker. Add water until the total volume is 200 mL. Stir the mixture and determine the pH. Slowly add sulfuric acid until the pH is less than or equal to 1.

<u>CAUTION</u>: Toxic hydrogen sulfide may be generated from the acidified sample. This operation must be performed in the hood and the sample left in the hood until the sample has been made alkaline or the sulfide has been destroyed.

From the amount of sulfuric acid required to acidify the sample and the mass or volume of the sample acidified, calculate the amount of acid required to acidify the sample to be placed in the distillation flask.

7.12.2 Prepare the gas evolution apparatus as shown in Figure 1 in a fume hood.

7.12.2.1 Prepare a hot water bath at 70°C by filling a crystallizing dish or other suitable container with water and place it on a hotplate stirrer. Place a thermometer in the bath and monitor the temperature to maintain the bath at 70°C.

7.12.2.2 Assemble the three neck 500-mL flask, fritted gas inlet tube, and exhaust tube. Use Teflon sleeves to seal the ground glass joints. Place a Teflon coated stirring bar into the flask.

7.12.2.3 Place into each gas scrubbing bottle 10 ± 0.5 mL of the 0.5M zinc acetate solution, 5.0 ± 0.1 mL of 37% formaldehyde and 100 ± 5.0 mL water.

7.12.2.4 Connect the gas evolution flask and gas scrubbing bottles as shown in Figure 1. Secure all fittings and joints.

7.12.3 Carefully place an accurately weighed sample which contains 1.0 to 50 mg of sulfide into the flask. If necessary, dilute to approximately 200 mL with water.

7.12.4 Place the dropping funnel onto the flask making sure its stopcock is closed. Add the volume of sulfuric acid calculated in Step 7.1.1 plus an additional 50 mL into the dropping funnel. The bottom stopcock must be closed.

7.12.5 Attach the nitrogen inlet to the top of the dropping funnel gas shut-off valve. Turn on the nitrogen purge gas and adjust the flow through the sample flask to 25 mL/min. The nitrogen in the gas scrubbing bottles should bubble at a rate of about five bubbles per second. Nitrogen pressure should be limited to approximately 10 psi to prevent excess stress on the glass system and fittings. Verify that there are no leaks in the system. Open the nitrogen shut-off valve leading to the dropping funnel. Observe that the gas flow into the sample vessel will stop for a short period while the pressure throughout the system equalizes. If the gas flow through the sample flask does not return within a minute, check for leaks around the dropping funnel. Once flow has stabilized, turn on the magnetic stirrer. Purge the system for 15 minutes with nitrogen to remove oxygen.

7.12.6 Heat sample to 70°C. Open dropping funnel to a position that will allow a flow of sulfuric acid of approximately 5 mL/min. Monitor the system until most of the sulfuric acid contained within the dropping funnel has entered the sample flask. Close the dropping funnel while a small amount of acid remains. Immediately close the gas shut-off valve to the dropping funnel.

7.12.7 Purge, stir, and maintain a temperature of 70°C for a total of 90 minutes from start to finish. Shut off nitrogen supply. Turn off heat.

7.13 Titration of Distillate

7.13.1 Pipet a known amount of standardized 0.025N iodine solution (see Step 5.12) in a 500-mL flask, adding an amount in excess of that needed to oxidize the sulfide. Add enough water to bring the volume to 100 mL. The volume of standardized iodine solution should be about 65 mL for samples with 50 mg of sulfide.

7.13.2 Add 2 mL of 6N HCl to the iodine.

7.13.3 Pipet both of the gas scrubbing bottle solutions into the flask, keeping the end of the pipet below the surface of the iodine solution. If at any point in transferring the zinc acetate solution or rinsing the bottles, the amber color of the iodine disappears or fades to yellow, more 0.025N iodine must be added. This additional amount must be added to the amount from Step 7.13.1 for calculations. Record the total volume of standardized 0.025N iodine solution used.

7.13.4 Prepare a rinse solution of a known amount of standardized 0.025N iodine solution, 1 mL of 6N HCl, and water to rinse the remaining

white precipitate (zinc sulfide) from the gas scrubbing bottles into the flask. There should be no visible traces of precipitate after rinsing.

7.13.5 Rinse any remaining traces of iodine from the gas scrubbing bottles with water, and transfer the rinses to the flask.

7.13.6 Titrate the solution in the flask with standard 0.025N phenylarsine oxide or 0.025N sodium thiosulfate solution until the amber color fades to yellow. Add enough starch indicator for the solution to turn dark blue and titrate until the blue disappears. Record the volume of titrant used.

7.13.7 Calculate the concentration of sulfide in the sample as follows:

$$\frac{[(\text{mL of } I_2 \times \text{N of } I_2) - (\text{mL of titrant} \times \text{N of titrant})](16.03)}{\text{sample weight (kg)}} = \text{sulfide(mg/kg)}$$

8.0 QUALITY CONTROL

8.1 All quality control data must be maintained and available for reference or inspection for a period of three years. This method is restricted to use by or under supervision of experienced analysts. Refer to the appropriate section of Chapter One for additional quality control requirements.

8.2 A reagent blank should be run every twenty analyses or per analytical batch, whichever is more frequent.

8.3 Check standards are prepared from water and a known amount of sodium sulfide. A check standard should be run with each analytical batch of samples or once every twenty samples. Acceptable recovery will depend on the level and matrix.

8.4 A matrix spiked sample should be run for each analytical batch or twenty samples, whichever is more frequent, to determine matrix effects. If recovery is low, acid-insoluble sulfides are indicated. A matrix spiked sample is a sample brought through the whole sample preparation and analytical process.

8.5 Verify the calibration with an independently prepared QC reference sample every twenty samples or once per analytical batch, whichever is more frequent.

9.0 METHOD PERFORMANCE

9.1 Accuracy - Accuracy for this method was determined by three independent laboratories by measuring percent recoveries of spikes for waste samples. The results are summarized below.

Accuracy for the entire method for four synthetic waste samples 70-104% recovery

9.2 Precision

Precision of entire method for four synthetic waste samples
Percent coefficient of variation 1.0-34

10.0 REFERENCES

1. Test Methods for Evaluating Solid Waste, Physical/Chemical Methods, 3rd ed.; U.S. Environmental Protection Agency. Office of Solid Waste and Emergency Response. U.S. Government Printing Office: Washington, DC,1987; SW-846; 955-001-00000-1.

2. Methods for Chemical Analysis of Water and Wastes; U.S. Environmental Protection Agency. Office of Research and Development. Environmental Monitoring and Support Laboratory. ORD Publications Office. Center for Environmental Research Information: Cincinnati, OH, 1979; EPA-600/4-79-020, Method 376.1.

3. CRC Handbook of Chemistry and Physics, 66th ed.; Weast, R., Ed.; CRC: Boca Raton, FL, 1985.

4. Standard Methods for the Examination of Water and Wastewater, 16th ed.; Greenberg, A.E.; Trussell, R.R.; Clesceri, L.S., Eds.; American Water Works Association, Water Pollution Control Federation, American Public Health Association: Washington, DC, 1985; Methods 427, 427A, 427B, and 427D.

5. Andreae, M.O.; Bernard, W.R. Anal. Chem. 1983, 55, 608-612.

6. Barclay, H. Adv. Instrum. 1980, 35(2), 59-61.

7. Bateson, S.W.; Moody, G.J.; Thomas, J.P.R. Analyst 1986, 111, 3-9.

8. Berthage, P.O. Anal. Chim. Acta 1954, 10, 310-311.

9. Craig, P.J.; Moreton, P.A. Environ. Technol. Lett. 1982, 3, 511-520.

10. Franklin, G.O.; Fitchett, A.W. Pulp & Paper Canada 1982, 83(10), 40-44.

11. Fuller, W. Cyanide in the Environment; Van Zyl, D., Ed.; Proceedings of Symposium; December 1984.

12. Gottfried, G.J. "Precision, Accuracy, and MDL Statements for EPA Methods 9010, 9030, 9060, 7520, 7521, 7550, 7551, 7910, and 7911"; final report to the U.S. Environmental Protection Agency (EMSL-CI); Biopheric.

13. Kilroy, W.P. Talanta 1983, 30(6), 419-422.

14. Kurtenacher, V.A.; Wallak, R. Z. Anorg. U. Chem. 1927, 161, 202-209.

15. Landers, D.H.; David, M.B.; Mitchell, M.J. Int. J. Anal. Chem. 1983, 14, 245-256.

16. Opekar, F.; Brukenstein, S. Anal. Chem. 1984, 56, 1206-1209.

17. Ricklin, R.D.; Johnson, E.L. Anal. Chem. 1983, 55, 4.

18. Rohrbough, W.G.; et al. Reagent Chemicals, American Chemical Society Specifications, 7th ed.; American Chemical Society: Washington, DC, 1986.

19. Snedecor, G.W.; Ghran, W.G. Statistical Methods; Iowa State University Press: Ames, IA, 1980.

20. Umaña, M.; Beach, J.; Sheldon, L. "Revisions to Method 9010"; final report to the Environmental Protection Agency on Contract No. 68-01-7266; Research Triangle Institute: Research Triangle Park, NC, 1986; Work Assignment No. 1.

21. Umaña, M.; Sheldon, L. "Interim Report: Literature Review"; interim report to the U.S. Environmental Protection Agency in Contract No. 68-01-7266; Research Triangle Institute: Research Triangle Park, NC, 1986; Work Assignment No. 3.

22. Wang, W.; Barcelona, M.J. Environ. Inter. 1983, 9, 129-133.

23. Wronksi, M. Talanta 1981, 28, 173-176.

24. Application Note 156; Princeton Applied Research Corp.: Princeton, NJ.

25. Guidelines for Assessing and Reporting Data Quality for Environmental Measurements; U.S. Environmental Protection Agency Office of Research and Development: Washington, DC, 1983.

26. Fed. Regist. 1980, 45(98), 33122.

27. The Analytical Chemistry of Sulfur and Its Compounds, Part I; Karchmer, J.H., Ed.; Wiley-Interscience: New York, 1970.

28. Methods for the Examination of Water and Associated Materials; Department of the Environment: England, 1983.

29. "Development and Evaluation of a Test Procedure for Reactivity Criteria for Hazardous Waste"; final report to the U.S. Environmental Protection Agency on Contract 68-03-2961; EAL: Richmond, CA.

30. 1985 Annual Book of ASTM Standards, Vol. 11.01; "Standard Specification for Reagent Water"; ATSM: Philadelphia, PA, 1985; D1193-77.

FIGURE 1.
GAS EVOLUTION APPARATUS

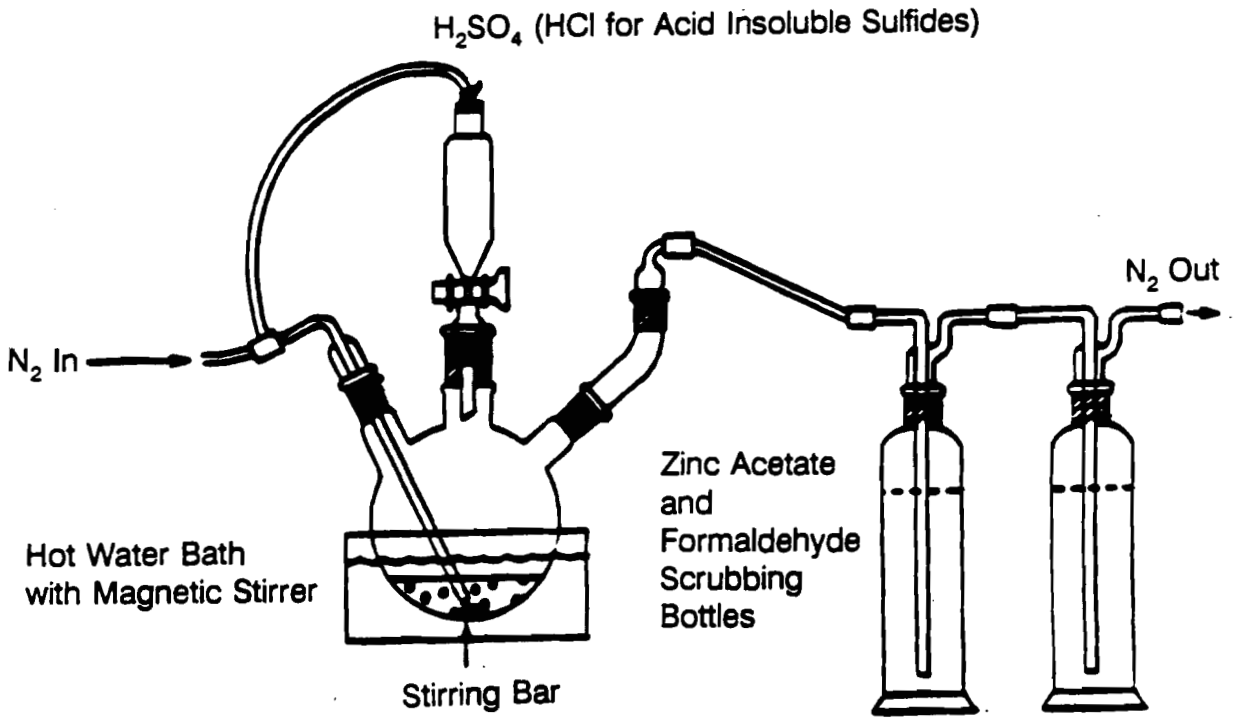

FIGURE 2.
TUMBLER-EXTRACTOR

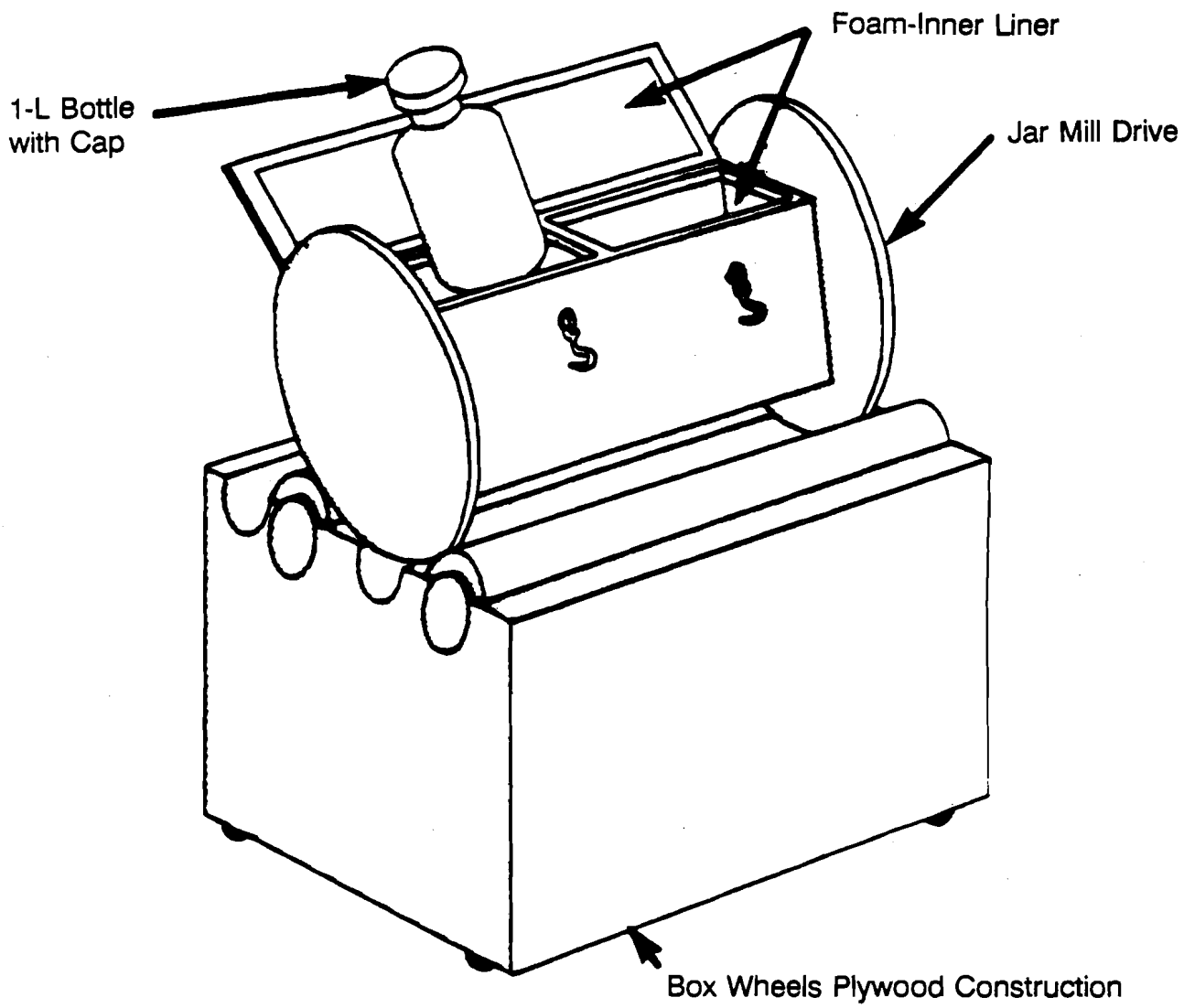

FIGURE 3.
EXTRACTOR

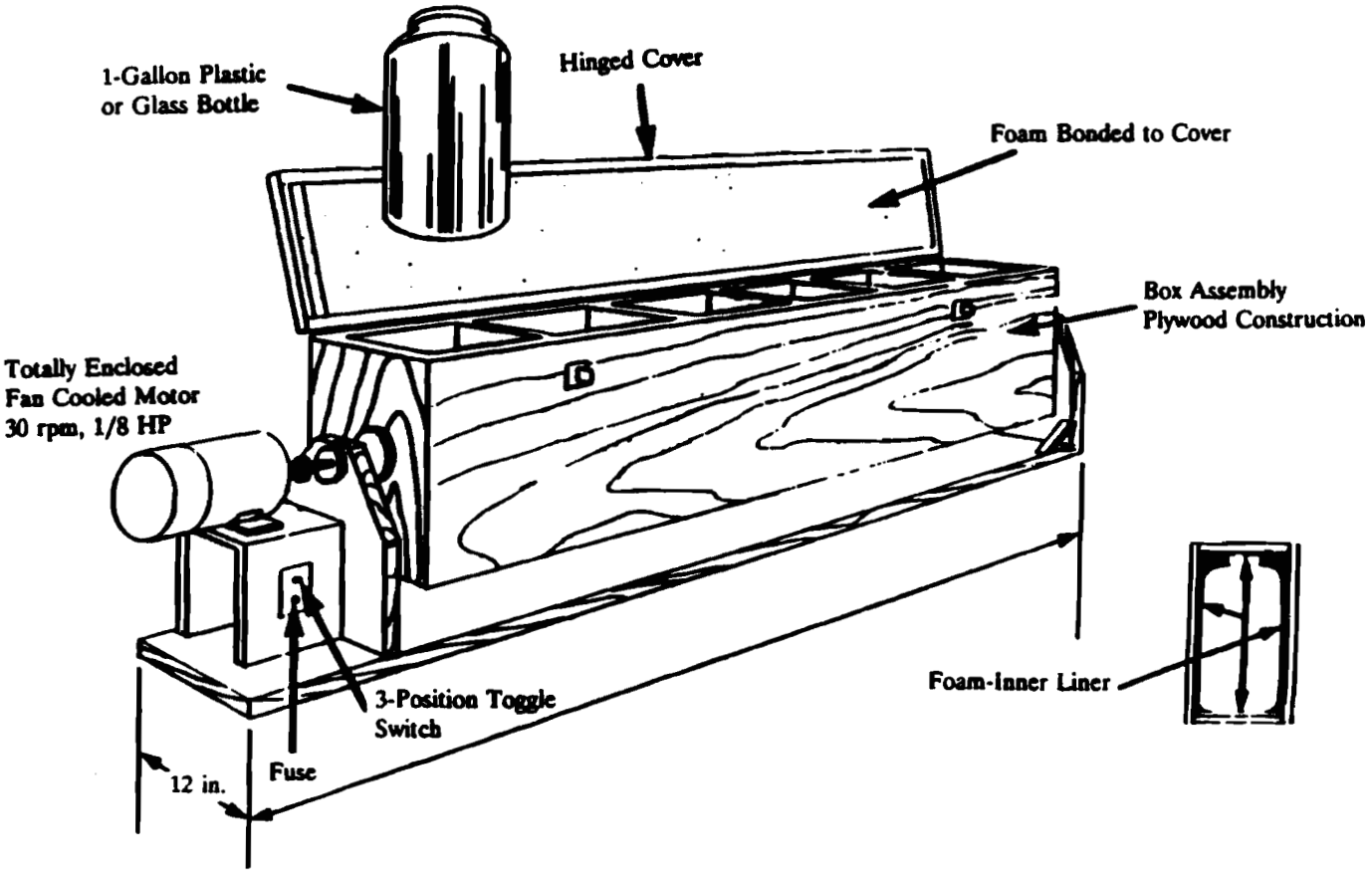

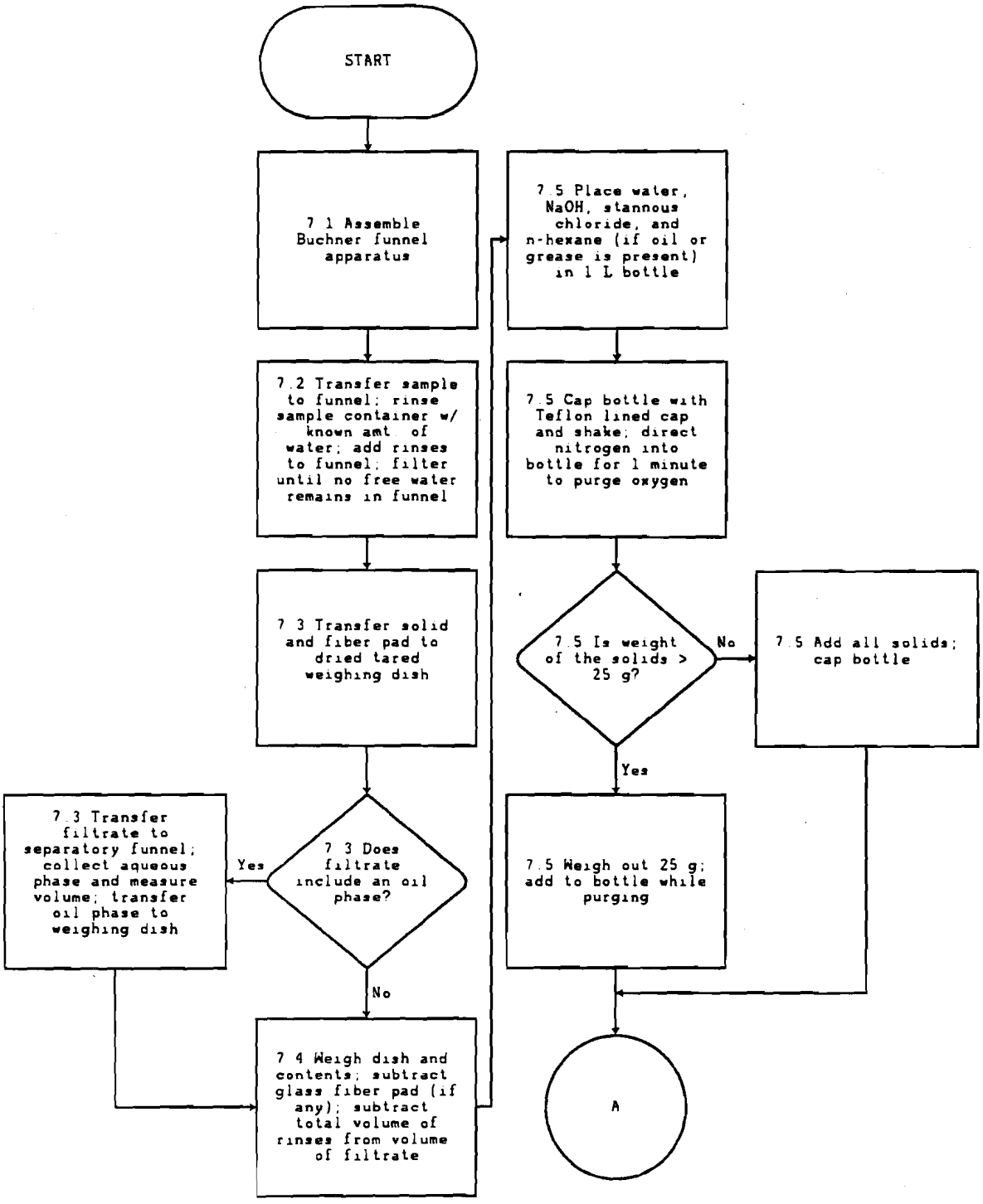
START
7.1 Assemble Buchner funnel apparatus
7.2 Transfer sample to funnel; rinse sample container w/ known amt. of water; add rinses to funnel; filter until no free water remains in funnel
7.3 Transfer solid and fiber pad to dried tared weighing dish
7.3 Does filtrate include an oil phase?
Yes
7.3 Transfer filtrate to separatory funnel; collect aqueous phase and measure volume; transfer oil phase to weighing dish
No
7.4 Weigh dish and contents; subtract glass fiber pad (if any); subtract total volume of rinses from volume of filtrate
7.5 Place water, NaOH, stannous chloride, and n-hexane (if oil or grease is present) in 1 L bottle
7.5 Cap bottle with Teflon lined cap and shake; direct nitrogen into bottle for 1 minute to purge oxygen
7.5 Is weight of the solids > 25 g?
No
7.5 Add all solids; cap bottle
Yes
7.5 Weigh out 25 g; add to bottle while purging
A

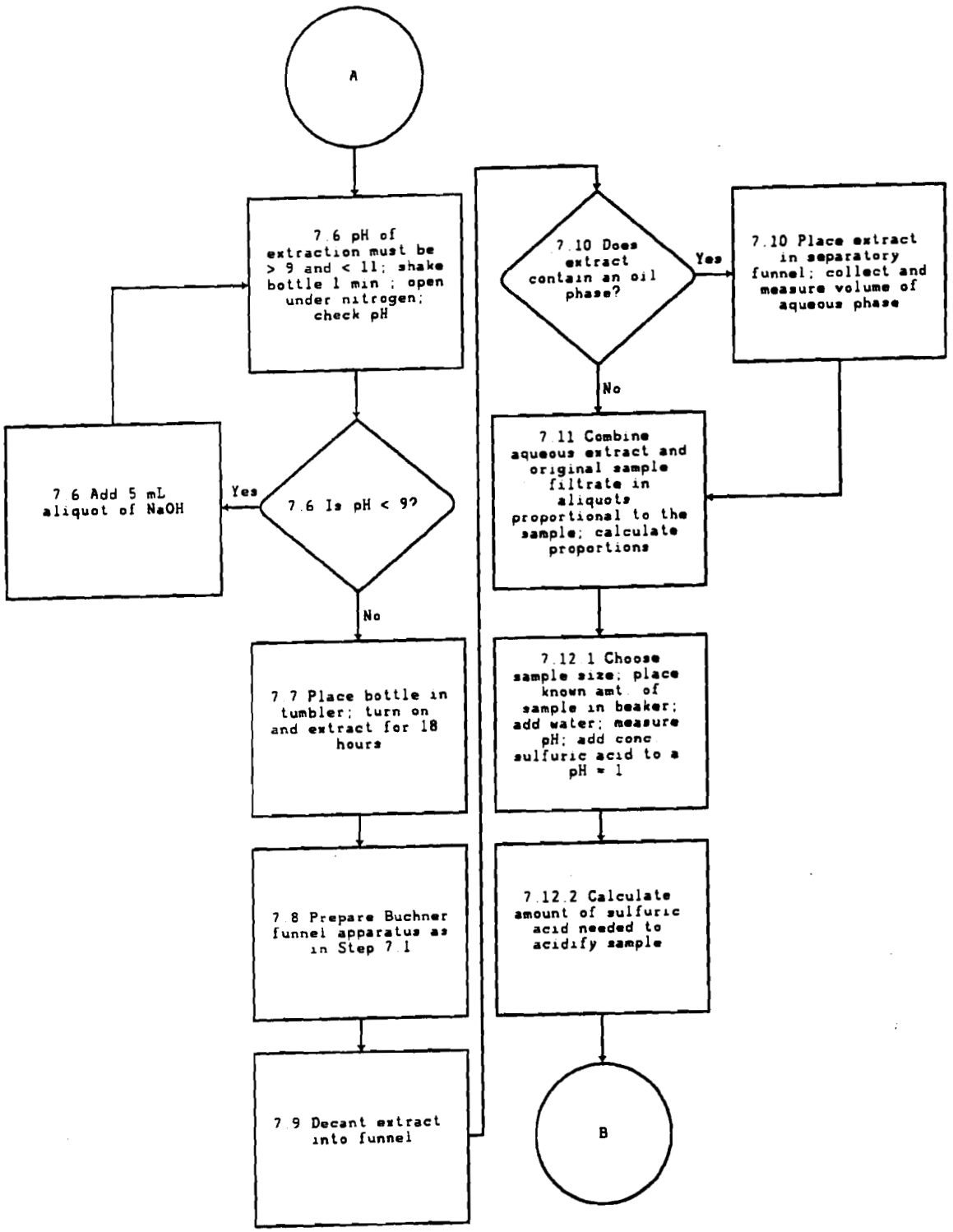
A
7.6 pH of extraction must be > 9 and < 11; shake bottle 1 min.; open under nitrogen; check pH
7.6 Is pH < 9?
Yes
7.6 Add 5 mL aliquot of NaOH
No
7.7 Place bottle in tumbler; turn on and extract for 18 hours
7.8 Prepare Buchner funnel apparatus as in Step 7.1
7.9 Decant extract into funnel
7.10 Does extract contain an oil phase?
Yes
7.10 Place extract in separatory funnel; collect and measure volume of aqueous phase
No
7.11 Combine aqueous extract and original sample filtrate in aliquots proportional to the sample; calculate proportions
7.12.1 Choose sample size; place known amt. of sample in beaker; add water; measure pH; add conc sulfuric acid to a pH = 1
7.12.2 Calculate amount of sulfuric acid needed to acidify sample
B

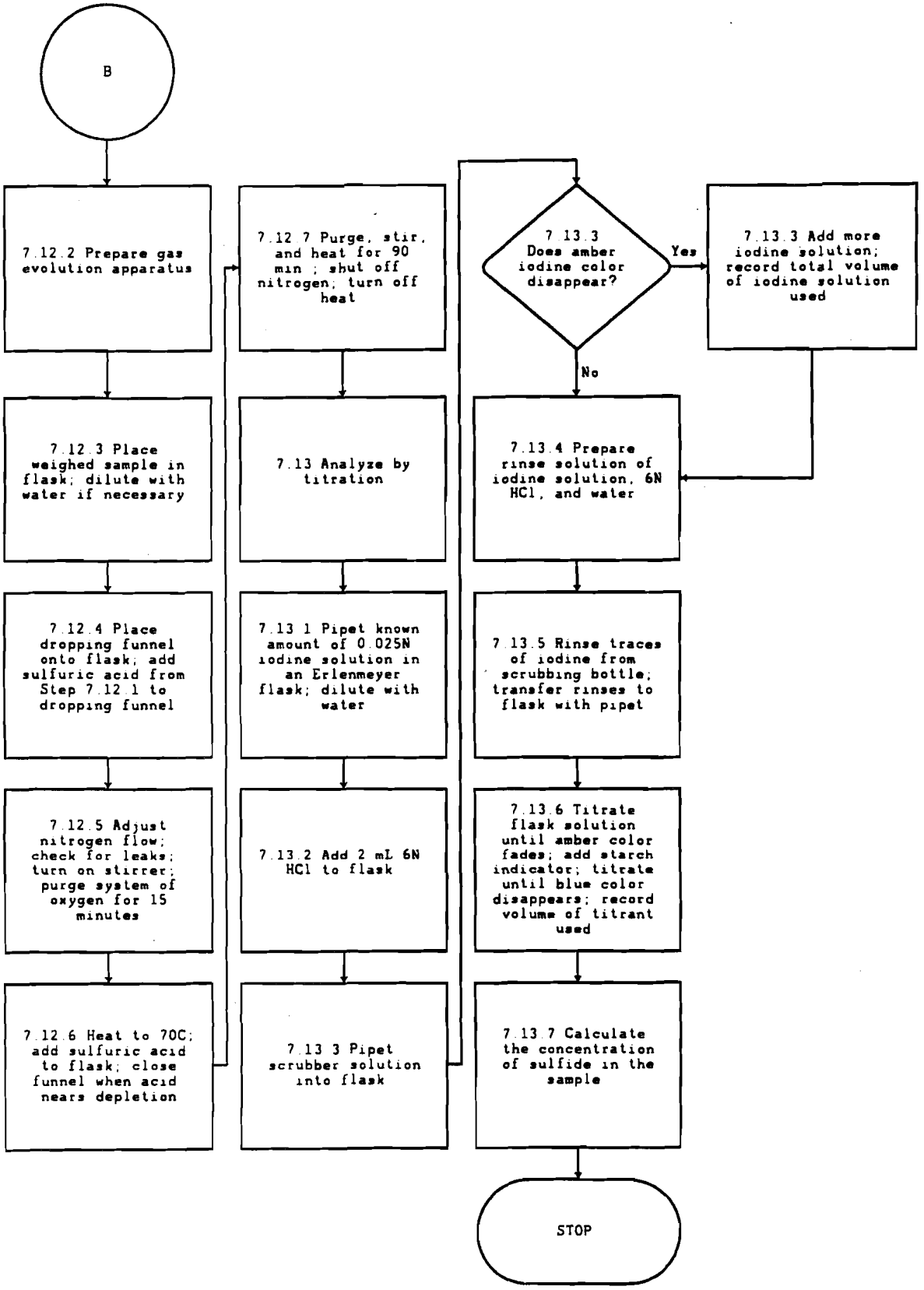
B
7.12.2 Prepare gas evolution apparatus
7.12.3 Place weighed sample in flask; dilute with water if necessary
7.12.4 Place dropping funnel onto flask; add sulfuric acid from Step 7.12.1 to dropping funnel
7.12.5 Adjust nitrogen flow; check for leaks; turn on stirrer; purge system of oxygen for 15 minutes
7.12.6 Heat to 70C; add sulfuric acid to flask; close funnel when acid nears depletion
7.12.7 Purge, stir, and heat for 90 min ; shut off nitrogen; turn off heat
7.13 Analyze by titration
7.13.1 Pipet known amount of 0.025N iodine solution in an Erlenmeyer flask; dilute with water
7.13.2 Add 2 mL 6N HCl to flask
7.13.3 Pipet scrubber solution into flask
7.13.3 Does amber iodine color disappear?
Yes
No
7.13.3 Add more iodine solution; record total volume of iodine solution used
7.13.4 Prepare rinse solution of iodine solution, 6N HCl, and water
7.13.5 Rinse traces of iodine from scrubbing bottle; transfer rinses to flask with pipet
7.13.6 Titrate flask solution until amber color fades; add starch indicator; titrate until blue color disappears; record volume of titrant used
7.13.7 Calculate the concentration of sulfide in the sample
STOP

METHOD 9035

SULFATE (COLORIMETRIC, AUTOMATED, CHLORANILATE)

1.0 SCOPE AND APPLICATION

1.1 This automated method is applicable to ground water, drinking and surface waters, and domestic and industrial wastes containing 10 to 400 mg SO_4^{-2}/liter.

2.0 SUMMARY OF METHOD

2.1 When solid barium chloranilate is added to a solution containing sulfate, barium sulfate is precipitated, releasing the highly colored acid chloranilate ion. The color intensity in the resulting chloranilic acid solution is proportional to the amount of sulfate present.

3.0 INTERFERENCES

3.1 Cations such as calcium, aluminum, and iron interfere by precipitating the chloranilate. These ions are removed by passage through an ion-exchange column.

3.2 Samples should be centrifuged or filtered before analysis.

4.0 APPARATUS AND MATERIALS

4.1 Automated continuous-flow analytical instrument, with:

4.1.1 Sampler I.

4.1.2 Continuous filter.

4.1.3 Manifold.

4.1.4 Proportioning pump.

4.1.5 Colorimeter: Equipped with 15 mm tubular flowcell and 520 nm filters.

4.1.6 Recorder.

4.1.7 Heating bath, 45°C.

4.2 Magnetic stirrer.

5.0 REAGENTS

5.1 ASTM Type II water (ASTM D1193): Water should be monitored for impurities.

5.2 Barium chloranilate: Add 9 g of barium chloranilate ($BaC_6Cl_2O_4$) to 333 mL of spectrophotometric grade ethyl alcohol and dilute to 1 liter with Type II water.

5.3 Acetate buffer, pH 4.63: Dissolve 13.6 g of sodium acetate in Type II water. Add 6.4 mL of acetic acid and dilute to 1 liter with Type II water. Make fresh weekly.

5.4 NaOH-EDTA solution: Dissolve 65 g of NaOH and 6 g EDTA in Type II water and dilute to 1 liter. This solution is also used to clean out the manifold system at end of sampling run.

5.5 Ion exchange resin: Dowex-50 W-X8, ionic form-H^+. The column is prepared by sucking a slurry of the resin into 12 in. of 3/16-in O.D. tubing. This may be conveniently done by using a pipet and a loose-fitting glass wool plug in the tube. The column, upon exhaustion, turns red. Ensure that air does not enter the column.

5.6 Stock solution: Dissolve 1.4790 g of oven-dried (105°C) Na_2SO_4 in Type II water and dilute to 1 liter in a volumetric flask (1.0 mL = 1.0 mg).

5.7 Standards: Prepare a series of standards by diluting suitable volumes of stock solution to 100.0 mL with Type II water. The following dilutions are suggested.

Stock Solution (mL)	Concentration (mg/L)
1.0	10
2.0	20
4.0	40
6.0	60
8.0	80
10.0	100
15.0	150
20.0	200
30.0	300
40.0	400

6.0 SAMPLE COLLECTION, PRESERVATION, AND HANDLING

6.1 All samples must have been collected using a sampling plan that addresses the considerations discussed in Chapter Nine of this manual.

6.2 Refrigerate at 4°C.

7.0 PROCEDURE

7.1 Set up manifold as shown in Figure 1. (Note that any precipitated $BaSO_4$ and the unused barium chloranilate are removed by filtration. If any $BaSO_4$ should come through the filter, it is complexed by the NaOH-EDTA reagent.)

7.2 Allow both colorimeter and recorder to warm up for 30 min. Run a baseline with all reagents, feeding Type II water through the sample line. Adjust dark current and operative opening on colorimeter to obtain suitable baseline.

7.3 Place Type II water wash tubes in alternate openings in sampler and set sample timing at 2.0 min.

7.4 Place working standards in sampler in order of decreasing concentration. Complete filling of sampler tray with unknown samples.

7.5 Switch sample line from Type II water to sampler and begin analysis.

7.6 Calculation:

7.6.1 Prepare a standard curve by plotting peak heights of processed standards against known concentrations. Compute concentration of samples by comparing sample peak heights with standard curve.

8.0 QUALITY CONTROL

8.1 All quality control data should be maintained and available for easy reference or inspection.

8.2 Calibration curves must be composed of a minimum of a blank and three standards. A linear calibration curve should be made for every hour of continuous sample analysis.

8.3 Dilute samples if they are more concentrated than the highest standard or if they fall on the plateau of a calibration curve.

8.4 Employ a minimum of one blank per sample batch to determine if contamination has occurred.

8.5 Verify calibration with an independently prepared check standard every 15 samples.

8.6 Run one spike duplicate sample for every 10 samples. A spike duplicate sample is a sample brought through the whole sample preparation and analytical process.

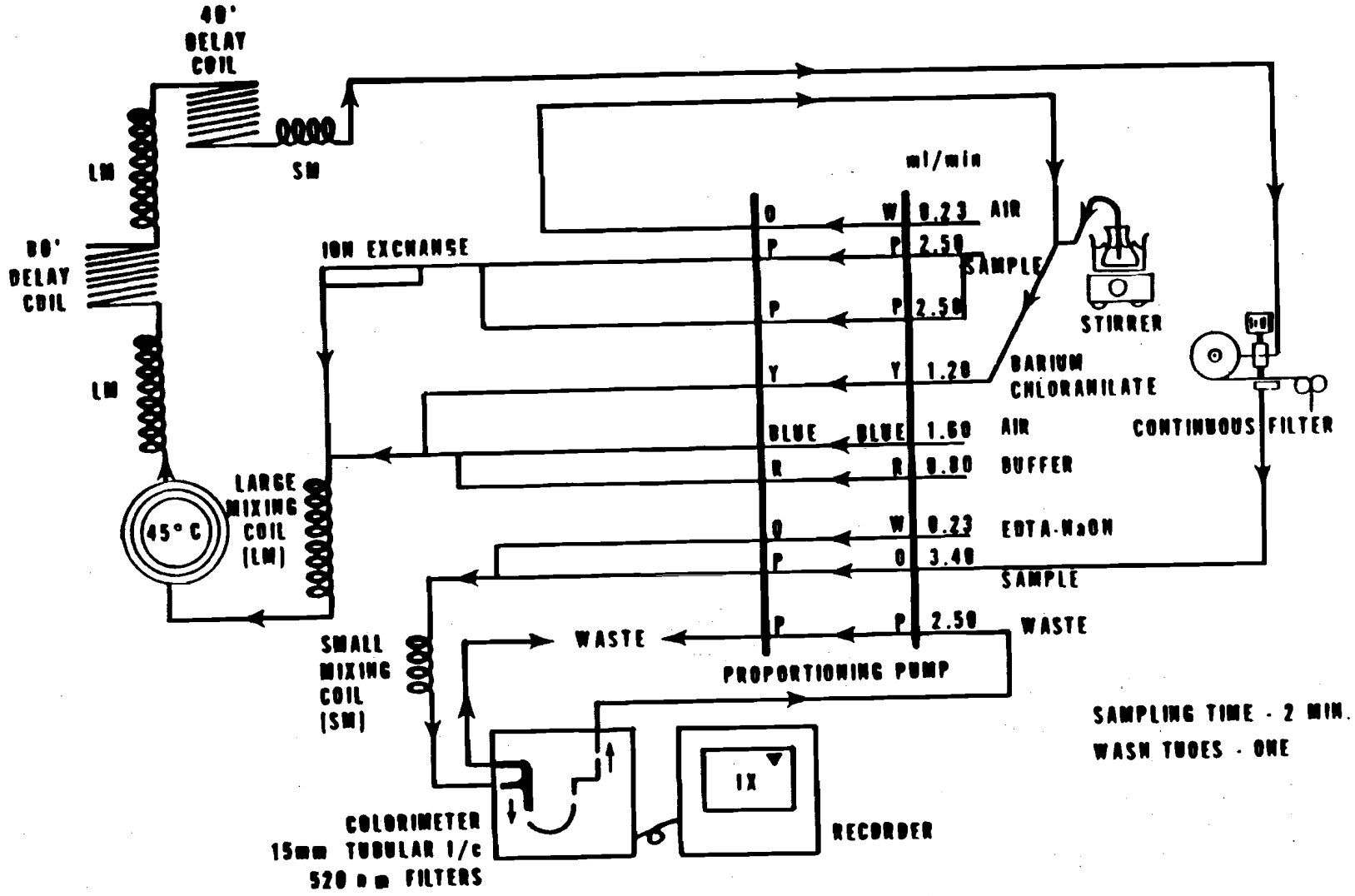

FIGURE 1 - SULFATE MANIFOLD AA-I

9.0 METHOD PERFORMANCE

9.1 Precision and accuracy data are available in Method 375.1 of Methods for Chemical Analysis of Water and Wastes.

10.0 REFERENCES

1. Bertolacini, R.J., and J.E. Barney, II, Colorimetric Determination of Sulfate with Barium Chloranilate, Anal. Chem., 29(2), pp. 281-283 (1957).

2. Gales, M.E., Jr., W.H. Kaylor, and J.E. Longbottom, Determination of Sulphate by Automatic Colorimetric Analysis, Analyst, 93, 97 (1968).

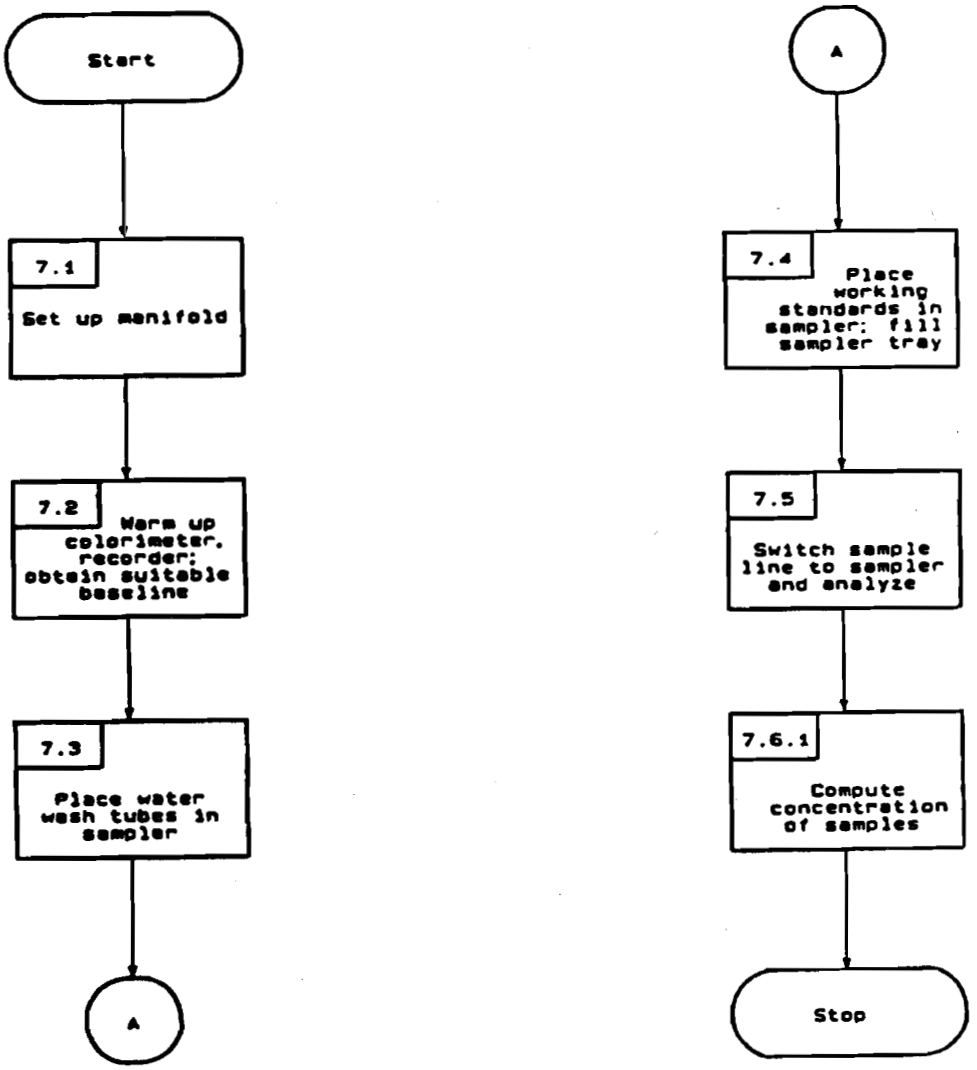
Start
7.1
Set up manifold
7.2
Warm up colorimeter, recorder; obtain suitable baseline
7.3
Place water wash tubes in sampler
A
A
7.4
Place working standards in sampler; fill sampler tray
7.5
Switch sample line to sampler and analyze
7.6.1
Compute concentration of samples
Stop

METHOD 9036

SULFATE (COLORIMETRIC, AUTOMATED, METHYLTHYMOL BLUE, AA II)

1.0 SCOPE AND APPLICATION

1.1 This automated method is applicable to ground water, drinking and surface waters, and domestic and industrial wastes.

1.2 Samples in the range of 0.5 to 300 mg SO_4^{-2}/liter can be analyzed.

2.0 SUMMARY OF METHOD

2.1 The sample is first passed through a sodium-form cation-exchange column to remove multivalent metal ions. The sample containing sulfate is then reacted with an alcohol solution of barium chloride and methylthymol blue (MTB) at a pH of 2.5-3.0 to form barium sulfate. The combined solution is raised to a pH of 12.5-13.0 so that excess barium reacts with MTB. The uncomplexed MTB color is gray; if it is all chelated with barium, the color is blue. Initially, the barium and MTB are equimolar and equivalent to 30 mg SO_4^{-2}/liter; thus the amount of uncomplexed MTB is equal to the sulfate present.

3.0 INTERFERENCES

3.1 The ion-exchange column eliminates interferences from multivalent cations. A mid-scale sulfate standard containing Ca^{++} should be analyzed periodically to ensure that the column is functioning properly.

3.2 Samples with pH below 2 should be neutralized because high acid concentrations elute cations from the ion-exchange resin.

3.3 Turbid samples should be filtered or centrifuged.

4.0 APPARATUS AND MATERIALS

4.1 Automated continuous-flow analytical instrument:

4.1.1 Sampler.

4.1.2 Manifold: High- or low-level (Figure 1).

4.1.3 Proportioning pump.

4.1.4 Heating bath: Operable at the temperature specified.

4.1.5 Colorimeter: Equipped with 15 mm flowcell and 460 nm interference filters.

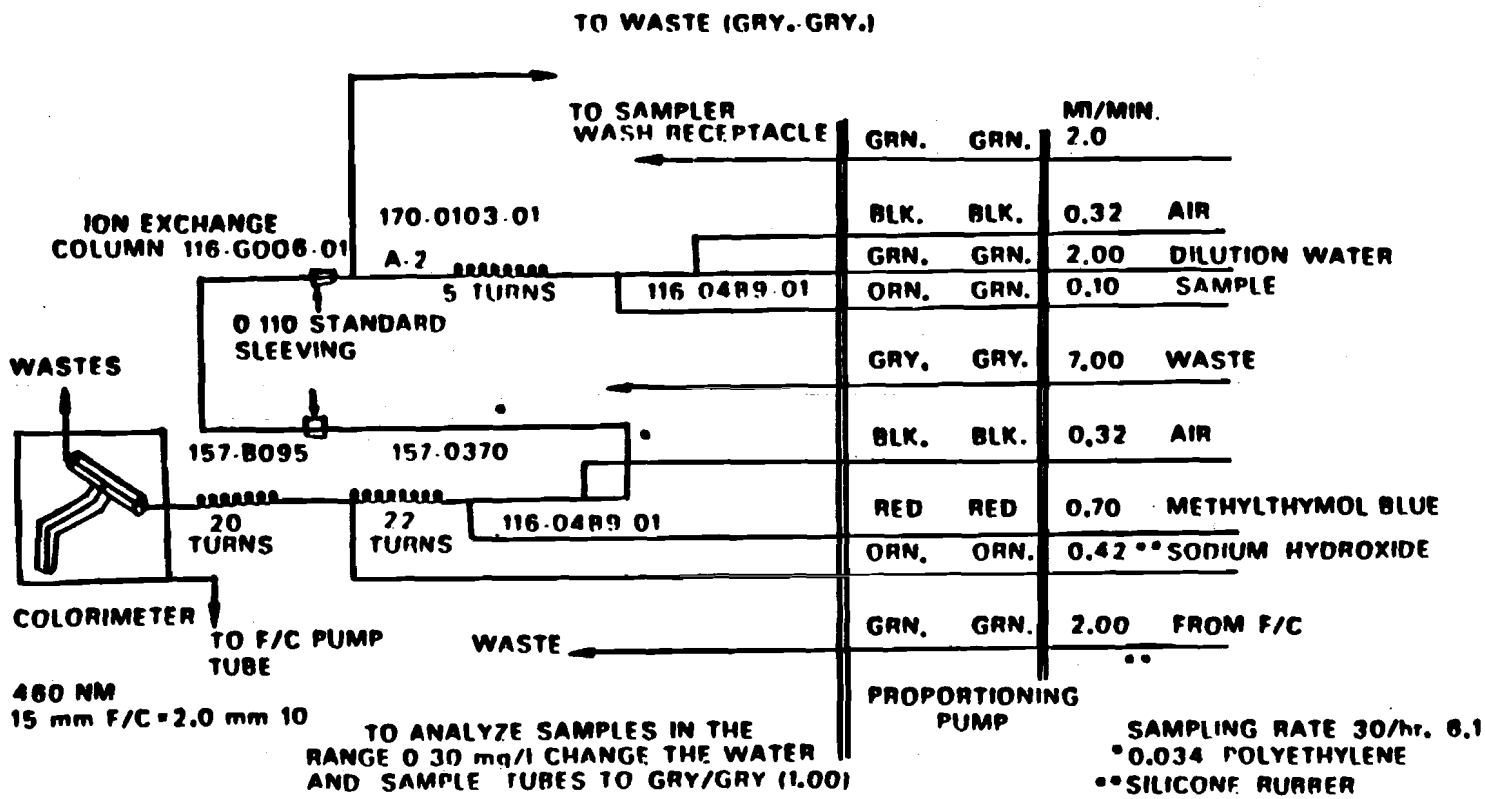

FIGURE 1 SULFATE MANIFOLD AA11

4.1.6 Filters: Of specified transmittance.

4.1.7 Recorder.

5.0 REAGENTS

5.1 ASTM Type II water (ASTM D1193): Water should be monitored for impurities.

5.2 Barium chloride: Dissolve 1.526 g of barium chloride dihydrate ($BaCl_2 \cdot 2H_2O$) in 500 mL of Type II water and dilute to 1 liter.

5.3 Methylthymol blue: Dissolve 0.1182 g of methylthymol blue (3'3"-bis-N,N-bis carboxymethyl-amino methylthymolsulfone-phthalein pentasodium salt) in 25 mL of barium chloride solution (Paragraph 5.2). Add 4 mL of 1.0 N hydrochloric acid, which changes the color to bright orange. Add 71 mL of water and dilute to 500 mL with ethanol. The pH of this solution is 2.6. This reagent should be prepared the day before and stored in a brown plastic bottle in the freezer.

5.4 Buffer, pH 10.5 ± 0.5: Dissolve 6.75 g of ammonium chloride in 500 mL of Type II water. Add 57 mL of concentrated ammonium hydroxide and dilute to 1 liter with Type II water.

5.5 Buffered EDTA: Dissolve 40 g of tetrasodium EDTA in pH 10.5 buffer (Paragraph 5.4) and dilute to 1 liter with buffer.

5.6 Sodium hydroxide solution (50%): Dissolve 500 g NaOH in 600 mL of Type II water, cool, and dilute to 1 liter.

5.7 Sodium hydroxide, 0.18 N: Dilute 14.4 mL of sodium hydroxide solution (Paragraph 5.6) to 1 liter.

5.8 Ion-exchange resin: Bio-Rex 70, 20-50 mesh, sodium form, Bio-Rad Laboratories, Richmond, California. Free from fines by stirring with several portions of Type II water and decant the supernate before settling is complete.

5.9 Dilution water: Add 0.75 mL of sulfate stock solution (Paragraph 5.10) and 3 drops of Brij-35 (available from Technicon) to 2 liters of Type II water.

5.10 Sulfate stock solution, 1 mL = 1 mg SO_4^{-2}: Dissolve 1.479 g of dried Na_2SO_4 (105°C) in Type II water and dilute to 1 liter.

5.11 Dilute sulfate solution, 1 mL = 0.1 mg SO_4^{-2}: Dilute 100 mL of sulfate stock solution (Paragraph 5.10) to 1 liter.

5.12 High-level working standards, 10-300 mg/L: Prepare high-level working standards by diluting the following volumes of stock standard (Paragraph 5.10) to 100 mL:

Stock Solution (mL)	Concentration (mg/L)
1	10
5	50
10	100
15	150
25	250
30	300

5.13 Low-level working standards, 0.5-30 mg/L: Prepare low-level working standards by diluting the following volumes of dilute sulfate solution (Paragraph 5.11) to 100 mL:

Stock Solution (mL)	Concentration (mg/L)
0.5	0.5
1	1.0
5	5.0
10	10.0
15	15.0
25	25.0
30	30.0

6.0 SAMPLE COLLECTION, PRESERVATION, AND HANDLING

6.1 All samples must have been collected using a sampling plan that addresses the considerations discussed in Chapter Nine of this manual.

6.2 Refrigerate at 4°C.

7.0 PROCEDURE

7.1 Set up manifold for high- (10-300 mg/L SO_4^{-2}) or low- (0.5-30 mg/L SO_4^{-2}) level samples as described in Figure 1.

7.2 The ion-exchange column is prepared by pulling a slurry of the resin into a piece of glass tubing 7.5-in. long, 2.0-mm I.D., and 3.6-mm O.D. This is conveniently done by using a pipet and a loose-fitting glass wool plug in the tubing. Care should be taken to avoid allowing air bubbles to enter the column. If air bubbles become trapped, the column should be prepared again. The column can exchange the equivalent of 35 mg of calcium. For the high-level manifold, this corresponds to about 900 samples with 200 mg/L Ca. The column should be prepared as often as necessary to ensure that no more than 50% of its capacity is used.

7.3 Allow the colorimeter, recorder, and printer to warm up for 30 min. Pump all reagents until a stable baseline is achieved.

7.4 Analyze all working standards in duplicate at the beginning of a run to develop a standard curve. The A and B control standards must be analyzed every hour to ensure that the system remains properly calibrated. Because the chemistry is nonlinear, the 180-mg/L standard is set at 50% on the recorder using the standard calibration control on the colorimeter.

7.5 At the end of each day, the system should be washed with the buffered EDTA solution (Paragraph 5.5). This is done by placing the methylthymol blue line and the sodium hydroxide line in water for a few minutes and then in the buffered EDTA solution for 10 min. Wash the system with water for 15 min before shutting down.

7.6 Prepare a standard curve by plotting peak heights of five processed standards against known concentrations. Compute concentration of samples by comparing sample peak heights with the standard curve. Note that this is not a linear curve but a third order curve.

8.0 QUALITY CONTROL

8.1 All quality control data should be maintained and available for easy reference or inspection.

8.2 Calibration curves must be composed of a minimum of a blank and three standards. A calibration curve should be made for every hour of continuous sample analysis.

8.3 Dilute samples if they are more concentrated than the highest standard or if they fall on the plateau of a calibration curve.

8.4 Employ a minimum of one blank per sample batch to determine if contamination has occurred.

8.5 Verify calibration with an independently prepared check standard every 15 samples.

8.6 Run one spike duplicate sample for every 10 samples. A duplicate sample is a sample brought through the whole sample preparation and analytical process.

9.0 METHOD PERFORMANCE

9.1 Precision and accuracy data are available in Method 375.2 of Methods for Chemical Analysis of Water and Wastes.

10.0 REFERENCES

1. Coloros, E., M.R. Panesar, and F.P. Parry, "Linearizing the Calibration Curve in Determination of Sulfate by the Methylthymol Blue Method," Anal. Chem. 48, 1693 (1976).

2. Lazrus, A.L., K.C. Hill, and J.P. Lodge, "Automation in Analytical Chemistry," Technicon Symposia, 1965.

SULFATE (COLORIMETRIC, AUTOMATED, METHYLTHYMOL BLUE, AA II)

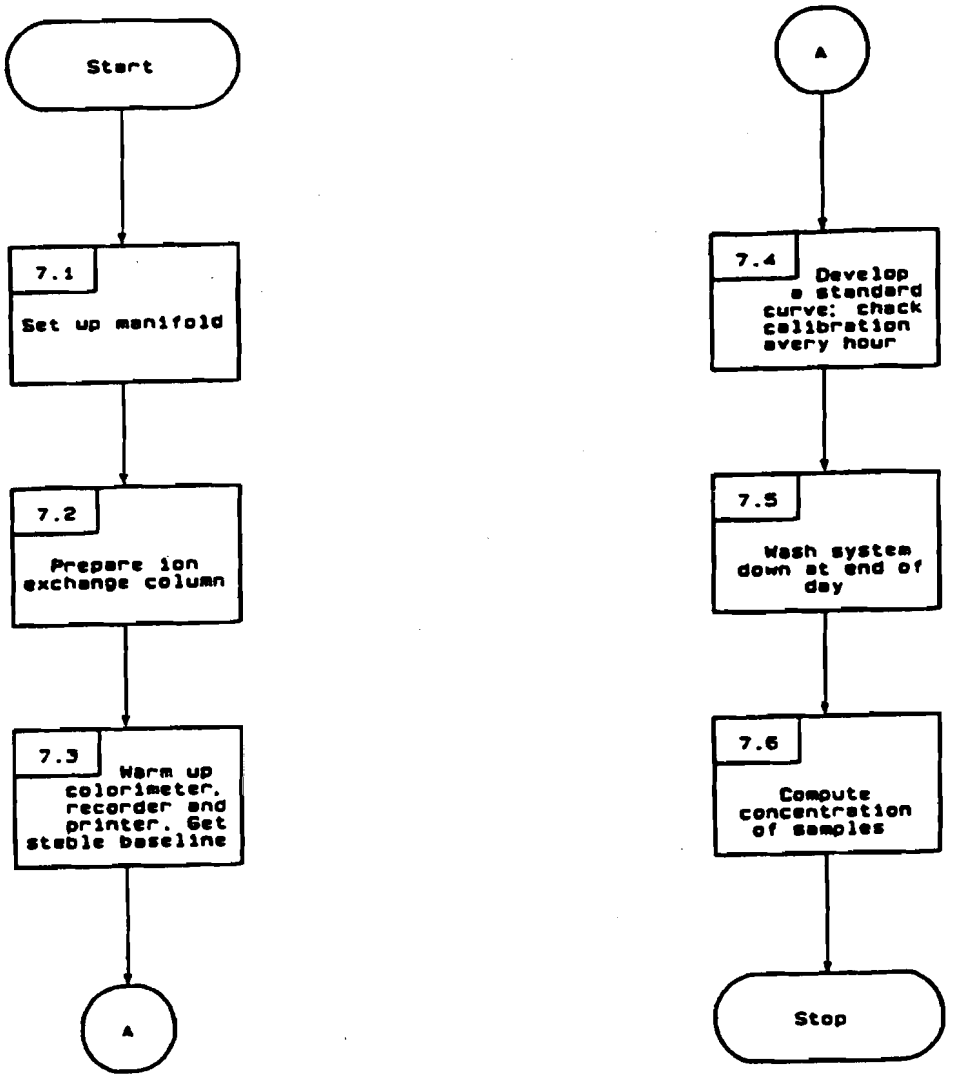

METHOD 9038

SULFATE (TURBIDIMETRIC)

1.0 SCOPE AND APPLICATION

1.1 This method is applicable to ground water, drinking and surface waters, and domestic and industrial wastes.

1.2 This method is suitable for all concentration ranges of sulfate (SO_4^{-2}); however, in order to obtain reliable readings, use a sample aliquot containing not more than 40 mg/L of SO_4^{-2}.

1.3 The minimum detectable limit is approximately 1 mg/L of SO_4^{-2}.

2.0 SUMMARY OF METHOD

2.1 Sulfate ion is converted to a barium sulfate suspension under controlled conditions. The resulting turbidity is determined by a nephelometer, filter photometer, or spectrophotometer and compared with a curve prepared from standard sulfate solution.

3.0 INTERFERENCES

3.1 Color and turbidity due to the sample matrix can cause positive interferences which must be accounted for by use of blanks.

3.2 Silica in concentrations over 500 mg/L will interfere.

4.0 APPARATUS AND MATERIALS

4.1 Magnetic stirrer: Variable speed so that it can be held constant just below splashing. Use identical shapes and sizes of magnetic stirring bars.

4.2 Photometer (one of the following, given in order of preference):

4.2.1 Nephelometer.

4.2.2 Spectrophotometer: For use at 420 nm with light path of 4 to 5 cm.

4.2.3 Filter photometer: With a violet filter having a maximum near 420 nm and a light path of 4 to 5 cm.

4.3 Stopwatch: If the magnetic stirrer is not equipped with an accurate timer.

4.4 Measuring spoon: Capacity 0.2 to 0.3 mL.

5.0 REAGENTS

5.1 ASTM Type II water (ASTM D1193): Water should be monitored for impurities.

5.2 Conditioning reagent: Slowly add 30 mL concentrated HCl to 300 mL Type II water, 100 mL 95% ethanol or isopropanol, and 75 g NaCl in solution in a container. Add 50 mL glycerol and mix.b

5.3 Barium chloride ($BaCl_2$): Crystals, 20 to 30 mesh.

5.4 Sodium carbonate solution: (approximately 0.05 N): Dry 3 to 5 g primary standard Na_2CO_3 at 250°C for 4 hr and cool in a desiccator. Weigh 2.5 ± 0.2 g (to the nearest mg), transfer to a 1-liter volumetric flask, and fill to the mark with Type II water.

5.5 Proprietary reagents: Such as Hach Sulfaver or equivalent, are acceptable.

5.6 Standard sulfate solution (1.00 mL = 100 ug SO_4^{-2}): Prepare by Paragraph 5.6.1 or 5.6.2.

5.6.1 **Standard sulfate solution from H_2SO_4:**

5.6.1.1 Standard sulfuric acid, 0.1 N: Dilute 3.0 mL concentrated H_2SO_4 to 1 liter with Type II water. Standardize against 40.0 mL of 0.05 N Na_2CO_3 solution (Paragraph 5.4) with about 60 mL Type II water by titrating potentiometrically to a pH of about 5. Lift electrodes and rinse into beaker. Boil gently for 3 to 5 min under a watch glass cover. Cool to room temperature. Rinse cover glass into beaker. Continue titration to the pH inflection point. Calculate the normality of H_2SO_4 using:

$$N = \frac{A \times B}{53.00 \times C}$$

where:

A = g Na_2CO_3 weighed into 1 liter flask (Paragraph 5.4);

B = mL Na_2CO_3 solution used in the standardization;

C = mL acid used in titration;

5.6.1.2 Standard acid, 0.02 N: Dilute appropriate amount of standard acid, 0.1 N (Paragraph 5.6.1.1) to 1 liter (use 200.00 mL standard acid if normality is 0.1000 N). Check by standardization against 15 mL of 0.05 N Na_2CO_3 solution (Paragraph 5.4).

5.6.1.3 Place 10 mL standard sulfuric acid, 0.02 N (Paragraph 5.6.1.2) in a 100-mL volumetric flask and dilute to the mark.

5.6.2 Standard sulfate solution from Na_2SO_4: Dissolve 147.9 mg anhydrous Na_2SO_4 in Type II water in a 1-liter volumetric flask and dilute to the mark with Type II water.

6.0 SAMPLE COLLECTION, PRESERVATION, AND HANDLING

6.1 All samples must have been collected using a sampling plan that addresses the considerations discussed in Chapter Nine of this manual.

6.2 Preserve by refrigerating at 4°C.

7.0 PROCEDURE

7.1 Formation of barium sulfate turbidity:

7.1.1 Place a 100-mL sample, or a suitable portion diluted to 100 mL, into a 250-mL Erlenmeyer flask.

7.1.2 Add exactly 5.0 mL conditioning reagent (Paragraph 5.2).

7.1.3 Mix in the stirring apparatus.

7.1.4 While the solution is being stirred, add a measured spoonful of $BaCl_2$ crystals (Paragraph 5.3) and begin timing immediately.

7.1.5 Stir exactly 1.0 min at constant speed.

7.2 Measurement of barium sulfate turbidity:

7.2.1 Immediately after the stirring period has ended, pour solution into absorbance cell.

7.2.2 Measure turbidity at 30-sec intervals for 4 min.

7.2.3 Record the maximum reading obtained in the 4-min period.

7.3 Preparation of calibration curve:

7.3.1 Prepare calibration curve using standard sulfate solution (Paragraph 5.6).

7.3.2 Space standards at 5-mg/L increments in the 0-40 mg/L sulfate range.

7.3.3 Above 50 mg/L the accuracy decreases and the suspensions lose stability.

7.3.4 Check reliability of calibration curve by running a standard with every three or four samples.

7.4 Correction for sample color and turbidity:

7.4.1 Run a sample blank using steps 7.1 and 7.2, without the addition of barium chloride (Paragraph 7.1.4).

7.5 Calculation:

7.5.1 Read mg SO_4^{-2} from linear calibration curve:

$$\text{mg } SO_4^{-2}/L = \frac{\text{mg } SO_4^{-2} \times 1{,}000}{\text{mL sample}}$$

8.0 QUALITY CONTROL

8.1 All quality control data should be maintained and available for easy reference or inspection.

8.2 Calibration curves must be composed of a minimum of a blank and three standards. A calibration curve should be made for every hour of continuous sample analysis.

8.3 Dilute samples if they are more concentrated than the highest standard or if they fall on the plateau of a calibration curve.

8.4 Employ a minimum of one blank per sample batch to determine if contamination has occurred.

8.5 Verify calibration with an independently prepared check standard every 15 samples.

8.6 Run one spike duplicate sample for every 10 samples. A spike duplicate sample is a sample brought through the whole sample preparation and analytical process.

9.0 METHOD PERFORMANCE

9.1 Thirty-four analysts in 16 laboratories analyzed six synthetic water samples containing exact increments of inorganic sulfate with the following results:

Increment as Sulfate (mg/L)	Precision as Standard Deviation (mg/L)	Accuracy as Bias (%)	Accuracy as Bias (mg/L)
8.6	2.30	-3.72	-0.3
9.2	1.78	-8.26	-0.8
110	7.86	-3.01	-3.3
122	7.50	-3.37	-4.1
188	9.58	+0.04	+0.1
199	11.8	-1.70	-3.4

(Data from: FWPCA Method Study 1, Mineral and Physical Analyses.)

9.2 A synthetic unknown sample containing 259 mg/L sulfate, 108 mg/L Ca, 82 mg/L Mg, 3.1 mg/L K, 19.9 mg/L Na, 241 mg/L chloride, 0.250 mg/L nitrite N, 1.1 mg/L nitrate N, and 42.5 mg/L total alkalinity (contributed by $NaHCO_3$), was analyzed in 19 laboratories by the turbidimetric method, with a relative standard deviation of 9.1% and a relative error of 1.2%.

10.0 REFERENCES

1. Annual Book of ASTM Standards, Part 31, "Water," Standard D516-68, Method B, p. 430 (1976).

2. Standard Methods for the Examination of Water and Wastewater, 14th ed., p. 496, Method 427C, (1975).

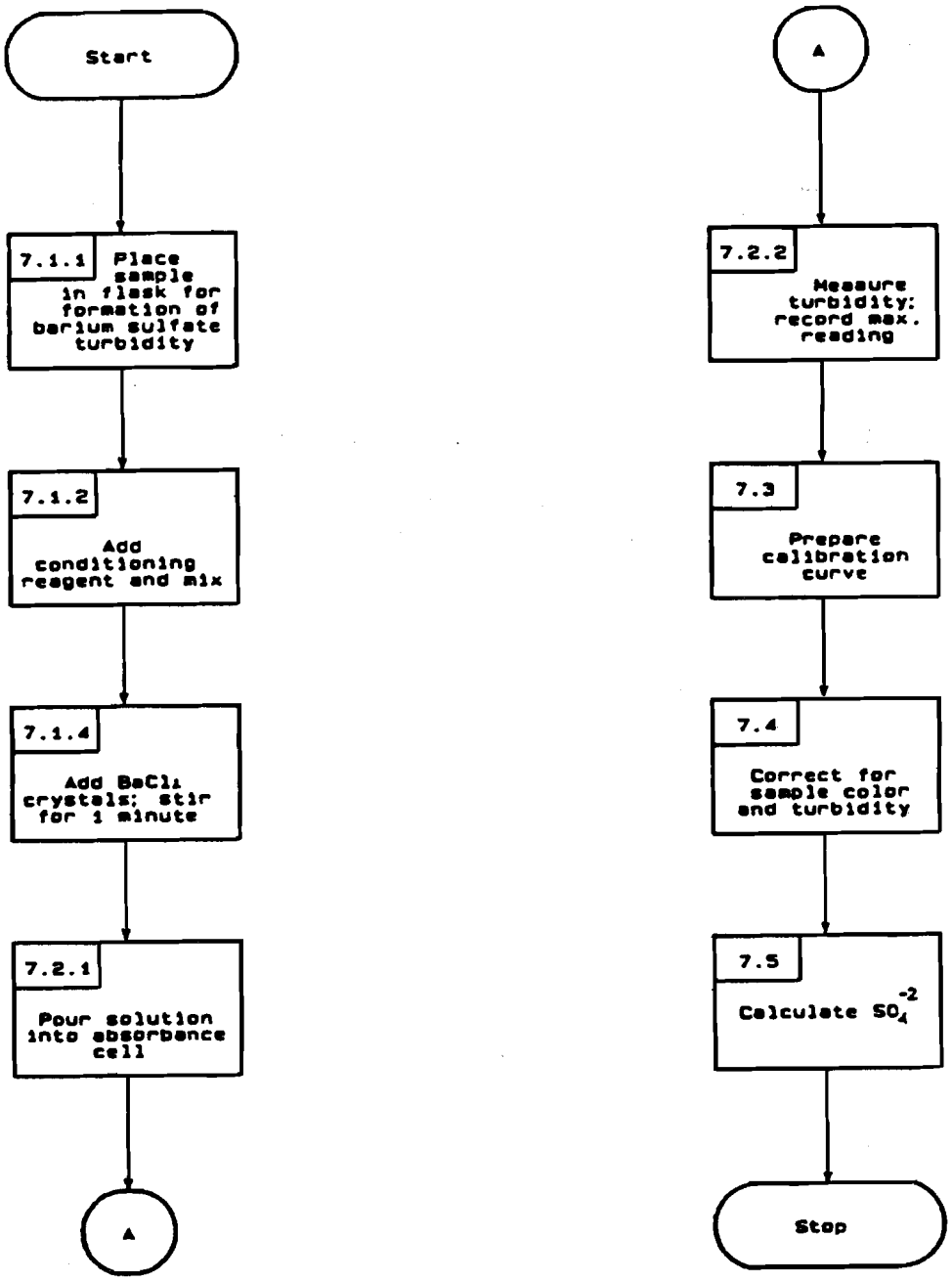
Start
7.1.1 Place sample in flask for formation of barium sulfate turbidity
7.1.2 Add conditioning reagent and mix
7.1.4 Add BaCl2 crystals; stir for 1 minute
7.2.1 Pour solution into absorbance cell
A
A
7.2.2 Measure turbidity; record max. reading
7.3 Prepare calibration curve
7.4 Correct for sample color and turbidity
7.5 Calculate SO_4^{-2}
Stop

METHOD 9056

DETERMINATION OF INORGANIC ANIONS BY ION CHROMATOGRAPHY

1.0 SCOPE AND APPLICATION

1.1 This method addresses the sequential determination of the anions chloride, fluoride, bromide, nitrate, nitrite, phosphate, and sulfate in the collection solutions from the bomb combustion of solid waste samples, as well as all water samples.

1.2 The method detection limit (MDL), the minimum concentration of a substance that can be measured and reported with 99% confidence that the value is above zero, varies for anions as a function of sample size and the conductivity scale used. Generally, minimum detectable concentrations are in the range of 0.05 mg/L for F^- and 0.1 mg/L for Br^-, Cl^-, NO_3^-, NO_2^-, PO_4^{3-}, and SO_4^{2-} with a 100-μL sample loop and a 10-μmho full-scale setting on the conductivity detector. Similar values may be achieved by using a higher scale setting and an electronic integrator. Idealized detection limits of an order of magnitude lower have been determined in reagent water by using a 1-μmho/cm full-scale setting (Table 1). The upper limit of the method is dependent on total anion concentration and may be determined experimentally. These limits may be extended by appropriate dilution.

2.0 SUMMARY OF METHOD

2.1 A small volume of combustate collection solution or other water sample, typically 2 to 3 mL, is injected into an ion chromatograph to flush and fill a constant volume sample loop. The sample is then injected into a stream of carbonate-bicarbonate eluent of the same strength as the collection solution or water sample.

2.2 The sample is pumped through three different ion exchange columns and into a conductivity detector. The first two columns, a precolumn or guard column and a separator column, are packed with low-capacity, strongly basic anion exchanger. Ions are separated into discrete bands based on their affinity for the exchange sites of the resin. The last column is a suppressor column that reduces the background conductivity of the eluent to a low or negligible level and converts the anions in the sample to their corresponding acids. The separated anions in their acid form are measured using an electrical-conductivity cell. Anions are identified based on their retention times compared to known standards. Quantitation is accomplished by measuring the peak height or area and comparing it to a calibration curve generated from known standards.

3.0 INTERFERENCES

3.1 Any species with a retention time similar to that of the desired ion will interfere. Large quantities of ions eluting close to the ion of interest will also result in an interference. Separation can be improved by adjusting the eluent concentration and/or flow rate. Sample dilution and/or the use of the method of standard additions can also be used. For example, high levels of organic acids may be present in industrial wastes, which may interfere with

inorganic anion analysis. Two common species, formate and acetate, elute between fluoride and chloride.

3.2 Because bromide and nitrate elute very close together, they are potential interferences for each other. It is advisable not to have Br^-/NO_3^- ratios higher than 1:10 or 10:1 if both anions are to be quantified. If nitrate is observed to be an interference with bromide, use of an alternate detector (e.g., electrochemical detector) is recommended.

3.3 Method interferences may be caused by contaminants in the reagent water, reagents, glassware, and other sample processing apparatus that lead to discrete artifacts or elevated baseline in ion chromatograms.

3.4 Samples that contain particles larger than 0.45 µm and reagent solutions that contain particles larger than 0.20 µm require filtration to prevent damage to instrument columns and flow systems.

3.5 If a packed bed suppressor column is used, it will be slowly consumed during analysis and, therefore, will need to be regenerated. Use of either an anion fiber suppressor or an anion micromembrane suppressor eliminates the time-consuming regeneration step through the use of a continuous flow of regenerant.

4.0 APPARATUS AND MATERIALS

4.1 Ion chromatograph, capable of delivering 2 to 5 mL of eluent per minute at a pressure of 200 to 700 psi (1.3 to 4.8 MPa). The chromatograph shall be equipped with an injection valve, a 100-µL sample loop, and set up with the following components, as schematically illustrated in Figure 1.

4.1.1 Precolumn, a guard column placed before the separator column to protect the separator column from being fouled by particulates or certain organic constituents (4 x 50 mm, Dionex P/N 030825 [normal run], or P/N 030830 [fast run], or equivalent).

4.1.2 Separator column, a column packed with low-capacity pellicular anion exchange resin that is styrene divinylbenzene-based has been found to be suitable for resolving F^-, Cl^-, NO_2^-, PO_4^{-3}, Br^-, NO_3^-, and SO_4^{-2} (see Figure 2) (4 x 250 mm, Dionex P/N 03827 [normal run], or P/N 030831 [fast run], or equivalent).

4.1.3 Suppressor column, a column that is capable of converting the eluent and separated anions to their respective acid forms (fiber, Dionex P/N 35350, micromembrane, Dionex P/N 38019 or equivalent).

4.1.4 Detector, a low-volume, flowthrough, temperature-compensated, electrical conductivity cell (approximately 6 µL volume, Dionex, or equivalent) equipped with a meter capable of reading from 0 to 1,000 µseconds/cm on a linear scale.

4.1.5 Pump, capable of delivering a constant flow of approximately 2 to 5 mL/min throughout the test and tolerating a pressure of 200 to 700 psi (1.3 to 4.8 MPa).

4.2 Recorder, compatible with the detector output with a full-scale response time in 2 seconds or less.

4.3 Syringe, minimum capacity of 2 mL and equipped with a male pressure fitting.

4.4 Eluent and regenerant reservoirs, suitable containers for storing eluents and regenerant. For example, 4 L collapsible bags can be used.

4.5 Integrator, to integrate the area under the chromatogram. Different integrators can perform this task when compatible with the electronics of the detector meter or recorder. If an integrator is used, the maximum area measurement must be within the linear range of the integrator.

4.6 Analytical balance, capable of weighing to the nearest 0.0001 g.

4.7 Pipets, Class A volumetric flasks, beakers: assorted sizes.

5.0 REAGENTS

5.1 Reagent grade chemicals shall be used in all tests. Unless otherwise indicated, it is intended that all reagents shall conform to the specifications of the Committee on Analytical Reagents of the American Chemical Society, where such specifications are available. Other grades may be used, provided it is first ascertained that the reagent is of sufficiently high purity to permit its use without lessening the accuracy of the determination.

5.2 Reagent water. All references to water in this method refer to reagent water, as defined in Chapter One. Column life may be extended by passing reagent water through a 0.22-μm filter prior to use.

5.3 Eluent, 0.003M $NaHCO_3$/0.0024M Na_2CO_3. Dissolve 1.0080 g of sodium bicarbonate (0.003M $NaHCO_3$) and 1.0176 g of sodium carbonate (0.0024M Na_2CO_3) in reagent water and dilute to 4 L with reagent water.

5.4 Suppressor regenerant solution. Add 100 mL of 1N H_2SO_4 to 3 L of reagent water in a collapsible bag and dilute to 4 L with reagent water.

5.5 Stock solutions (1,000 mg/L).

5.5.1 Bromide stock solution (1.00 mL = 1.00 mg Br^-). Dry approximately 2 g of sodium bromide (NaBr) for 6 hours at 150°C, and cool in a desiccator. Dissolve 1.2877 g of the dried salt in reagent water, and dilute to 1 L with reagent water.

5.5.2 Chloride stock solution (1.00 mL = 1.00 mg Cl^-). Dry sodium chloride (NaCl) for 1 hour at 600°C, and cool in a desiccator. Dissolve 1.6484 g of the dry salt in reagent water, and dilute to 1 L with reagent water.

5.5.3 Fluoride stock solution (1.00 mL = 1.00 mg F^-). Dissolve 2.2100 g of sodium fluoride (NaF) in reagent water, and dilute to 1 L with reagent water. Store in chemical-resistant glass or polyethylene.

5.5.4 Nitrate stock solution (1.00 mL = 1.00 mg NO_3^-). Dry approximately 2 g of sodium nitrate ($NaNO_3$) at 105°C for 24 hours. Dissolve exactly 1.3707 g of the dried salt in reagent water, and dilute to 1 L with reagent water.

5.5.5 Nitrite stock solution (1.00 mL = 1.00 mg NO_2^-). Place approximately 2 g of sodium nitrate ($NaNO_2$) in a 125 mL beaker and dry to constant weight (about 24 hours) in a desiccator containing concentrated H_2SO_4. Dissolve 1.4998 g of the dried salt in reagent water, and dilute to 1 L with reagent water. Store in a sterilized glass bottle. Refrigerate and prepare monthly.

NOTE: Nitrite is easily oxidized, especially in the presence of moisture, and only fresh reagents are to be used.

NOTE: Prepare sterile bottles for storing nitrite solutions by heating for 1 hour at 170°C in an air oven.

5.5.6 Phosphate stock solution (1.00 mL = 1.00 mg PO_4^{3-}). Dissolve 1.4330 g of potassium dihydrogen phosphate (KH_2PO_4) in reagent water, and dilute to 1 L with reagent water. Dry sodium sulfate (Na_2SO_4) for 1 hour at 105°C and cool in a desiccator.

5.5.7 Sulfate stock solution (1.00 mL = 1.00 mg SO_4^{2-}). Dissolve 1.4790 g of the dried salt in reagent water, and dilute to 1 L with reagent water.

5.6 Anion working solutions. Prepare a blank and at least three different working solutions containing the following combinations of anions. The combination anion solutions must be prepared in Class A volumetric flasks. See Table 2.

5.6.1 Prepare a high-range standard solution by diluting the volumes of each anion specified in Table 2 together to 1 L with reagent water.

5.6.2 Prepare the intermediate-range standard solution by diluting 10.0 mL of the high-range standard solution (see Table 2) to 100 mL with reagent water.

5.6.3 Prepare the low-range standard solution by diluting 20.0 mL of the intermediate-range standard solution (see Table 2) to 100 mL with reagent water.

5.7 Stability of standards. Stock standards are stable for at least 1 month when stored at 4°C. Dilute working standards should be prepared weekly, except those that contain nitrite and phosphate, which should be prepared fresh daily.

6.0 SAMPLE COLLECTION, PRESERVATION, AND HANDLING

6.1 All samples must have been collected using a sampling plan that addresses the considerations discussed in Chapter Nine of this manual.

6.2 Analyze the samples as soon as possible after collection. Preserve by refrigeration at 4°C.

7.0 PROCEDURE

7.1 Calibration

7.1.1 Establish ion chromatographic operating parameters equivalent to those indicated in Table 1.

7.1.2 For each analyte of interest, prepare calibration standards at a minimum of three concentration levels and a blank by adding accurately measured volumes of one or more stock standards to a Class A volumetric flask and diluting to volume with reagent water. If the working range exceeds the linear range of the system, a sufficient number of standards must be analyzed to allow an accurate calibration curve to be established. One of the standards should be representative of a concentration near, but above, the method detection limit if the system is operated on an applicable attenuator range. The other standards should correspond to the range of concentrations expected in the sample or should define the working range of the detector. Unless the attenuator range settings are proven to be linear, each setting must be calibrated individually.

7.1.3 Using injections of 0.1 to 1.0 mL (determined by injection loop volume) of each calibration standard, tabulate peak height or area responses against the concentration. The results are used to prepare a calibration curve for each analyte. During this procedure, retention times must be recorded.

7.1.4 The working calibration curve must be verified on each working day, or whenever the anion eluent strength is changed, and for every batch of samples. If the response or retention time for any analyte varies from the expected values by more than ± 10%, the test must be repeated, using fresh calibration standards. If the results are still more than ± 10%, an entirely new calibration curve must be prepared for that analyte.

7.1.5 Nonlinear response can result when the separator column capacity is exceeded (overloading). Maximum column loading (all anions) should not exceed about 400 ppm.

7.2 Analyses

7.2.1 Sample preparation. When aqueous samples are injected, the water passes rapidly through the columns, and a negative "water dip" is observed that may interfere with the early-eluting fluoride and/or chloride ions. The water dip should not be observed in the combustate samples; the collecting solution is a concentrated eluent solution that will "match" the eluent strength when diluted to 100-mL with reagent water according to the bomb combustion procedure. Any dilutions required in analyzing other water samples should be made with the eluent solution. The water dip, if present, may be removed by adding concentrated eluent to

all samples and standards. When a manual system is used, it is necessary to micropipet concentrated buffer into each sample. The recommended procedures follow:

(1) Prepare a 100-mL stock of eluent 100 times normal concentration by dissolving 2.5202 g $NaHCO_3$ and 2.5438 g Na_2CO_3 in 100-mL reagent water. Protect the volumetric flask from air.

(2) Pipet 5 mL of each sample into a clean polystyrene micro-beaker. Micropipet 50 μL of the concentrated buffer into the beaker and stir well.

Dilute the samples with eluent, if necessary, to concentrations within the linear range of the calibration.

7.2.2 Sample analysis.

7.2.2.1 Start the flow of regenerant through the suppressor column.

7.2.2.2 Set up the recorder range for maximum sensitivity and any additional ranges needed.

7.2.2.3 Begin to pump the eluent through the columns. After a stable baseline is obtained, inject a midrange standard. If the peak height deviates by more than 10% from that of the previous run, prepare fresh standards.

7.2.2.4 Begin to inject standards starting with the highest concentration standard and decreasing in concentration. The first sample should be a quality control reference sample to check the calibration.

7.2.2.5 Using the procedures described in Step 7.2.1, calculate the regression parameters for the initial standard curve. Compare these values with those obtained in the past. If they exceed the control limits, stop the analysis and look for the problem.

7.2.2.6 Inject a quality control reference sample. A spiked sample or a sample of known content must be analyzed with each batch of samples. Calculate the concentration from the calibration curve and compare the known value. If the control limits are exceeded, stop the analysis until the problem is found. Recalibration is necessary.

7.2.2.7 When an acceptable value has been obtained for the quality control sample, begin to inject the samples.

7.2.2.8 Load and inject a fixed amount of well-mixed sample. Flush injection loop thoroughly, using each new sample. Use the same size loop for standards and samples. Record the

resulting peak size in area or peak height units. An automated constant volume injection system may also be used.

7.2.2.9 The width of the retention time window used to make identifications should be based on measurements of actual retention time variations of standards over the course of a day. Three times the standard deviation of a retention time can be used to calculate a suggested window size for a compound. However, the experience of the analyst should weigh heavily in the interpretation of chromatograms.

7.2.2.10 If the response for the peak exceeds the working range of the system, dilute the sample with an appropriate amount of reagent water and reanalyze.

7.2.2.11 If the resulting chromatogram fails to produce adequate resolution, or if identification of specific anions is questionable, spike the sample with an appropriate amount of standard and reanalyze.

NOTE: Nitrate and sulfate exhibit the greatest amount of change, although all anions are affected to some degree. In some cases, this peak migration can produce poor resolution or misidentification.

7.3 Calculation

7.3.1 Prepare separate calibration curves for each anion of interest by plotting peak size in area, or peak height units of standards against concentration values. Compute sample concentration by comparing sample peak response with the standard curve.

7.3.2 Enter the calibration standard concentrations and peak heights from the integrator or recorder into a calculator with linear least squares capabilities.

7.3.3 Calculate the following parameters: slope (s), intercept (I), and correlation coefficient (r). The slope and intercept define a relationship between the concentration and instrument response of the form:

$$y_i = s_i x_i + I \quad (1)$$

where:

y_i = predicted instrument response
s_i = response slope
x_i = concentration of standard i
I = intercept

Rearrangement of the above equation yields the concentration corresponding to an instrumental measurement:

$$x_j = (y_j - I)/s_j \quad (2)$$

where:

x_j = calculated concentration for a sample
y_j = actual instrument response for a sample
s_j and I are calculated slope and intercept from calibration above.

7.3.4 Enter the sample peak height into the calculator, and calculate the sample concentration in milligrams per liter.

8.0 QUALITY CONTROL

8.1 All quality control data should be maintained and available for easy reference and inspection. Refer to Chapter One for additional quality control guidelines.

8.2 After every 10 injections, analyze a midrange calibration standard. If the instrument response has changed by more than 5%, recalibrate.

8.3 Analyze one in every ten samples in duplicate. Take the duplicate sample through the entire sample preparation and analytical process.

8.4 A matrix spiked sample should be run for each analytical batch or twenty samples, whatever is more frequent, to determine matrix effects.

9.0 METHOD PERFORMANCE

9.1 Single-operator accuracy and precision for reagent, drinking and surface water, and mixed domestic and industrial wastewater are listed in Table 3.

9.2 Combustate samples. These data are based on 41 data points obtained by six laboratories who each analyzed four used crankcase oils and three fuel oil blends with crankcase in duplicate. The oil samples were combusted using Method 5050. A data point represents one duplicate analysis of a sample. One data point was judged to be an outlier and was not included in the results.

9.2.1 Precision. The precision of the method as determined by the statistical examination of interlaboratory test results is as follows:

<u>Repeatability</u> - The difference between successive results obtained by the sample operator with the same apparatus under constant operating conditions on identical test material would exceed, in the long run, in the normal and correct operation of the test method, the following values only in 1 case in 20 (see Table 4):

*where x is the average of two results in μg/g.

$$Repeatability = 20.9 \sqrt{x}*$$

Reproducibility - The difference between two single and independent results obtained by different operators working in different laboratories on identical test material would exceed, in the long run, the following values only in 1 case in 20:

$$Reproducibility = 42.1 \sqrt{x}*$$

*where x is the average value of two results in μg/g.

9.2.2 Bias. The bias of this method varies with concentration, as shown in Table 5:

Bias = Amount found - Amount expected

10.0 REFERENCES

1. Environmental Protection Agency. Test Method for the Determination of Inorganic Anions in Water by Ion Chromatography. EPA Method 300.0. EPA-600/4-84-017. 1984.

2. Annual Book of ASTM Standards, Volume 11.01 Water D4327, Standard Test Method for Anions in Water by Ion Chromatography, pp. 696-703. 1988.

3. Standard Methods for the Examination of Water and Wastewater, Method 429, "Determination of Anions by Ion Chromatography with Conductivity Measurement," 16th Edition of Standard Methods.

4. Dionex, IC 16 Operation and Maintenance Manual, PN 30579, Dionex Corp., Sunnyvale, CA 94086.

5. Method detection limit (MDL) as described in "Trace Analyses for Wastewater," J. Glaser, D. Foerst, G. McKee, S. Quave, W. Budde, Environmental Science and Technology, Vol. 15, Number 12, p. 1426, December 1981.

6. Gaskill, A.; Estes, E. D.; Hardison, D. L.; and Myers, L. E. Validation of Methods for Determining Chlorine in Used Oils and Oil Fuels. Prepared for U.S. Environmental Protection Agency Office of Solid Waste. EPA Contract No. 68-01-7075, WA 80. July 1988.

TABLE 1.
CHROMATOGRAPHIC CONDITIONS AND METHOD DETECTION LIMITS IN REAGENT WATER

Analyte	Retention[a] time min	Relative retention time	Method[b] detection limit, mg/L
Fluoride	1.2	1.0	0.005
Chlorine	3.4	2.8	0.015
Nitrite-N	4.5	3.8	0.004
o-Phosphate-P	9.0	7.5	0.061
Nitrate-N	11.3	9.4	0.013
Sulfate	21.4	17.8	0.206

Standard conditions:

Columns - As specified in 4.1.1-4.1.3
Detector - As specified in 4.1.4
Eluent - As specified in 5.3

Sample loop - 100 µL
Pump volume - 2.30 mL/min

Concentrations of mixed standard (mg/L):

Fluoride 3.0
Chloride 4.0
Nitrite-N 10.0
o-Phosphate-P 9.0
Nitrate-N 30.0
Sulfate 50.0

[a]The retention time given for each anion is based on the equipment and analytical conditions described in the method. Use of other analytical columns or different elutant concentrations will effect retention times accordingly.

[b]MDL calculated from data obtained using an attentuator setting of 1-µmho/cm full scale. Other settings would produce an MDL proportional to their value.

TABLE 2.
PREPARATION OF STANDARD SOLUTIONS FOR INSTRUMENT CALIBRATION

	High Range Standard[1]	Anion concentration mg/L	Intermediate-range standard, mg/L (see 5.6.2)	Low-range standard, mg/L (see 5.6.3)
Fluoride (F^-)	10	10	1.0	0.2
Chloride (Cl^-)	10	10	1.0	0.2
Nitrite (NO_2^-)	20	20	2.0	0.4
Phosphate (PO_4^{3-})	50	50	5.0	1.0
Bromide (Br^-)	10	10	1.0	0.2
Nitrate (NO_3^-)	30	30	3.0	0.6
Sulfate (SO_4^{2-})	100	100	10.0	2.0

[1]Milliliters of each stock solution (1.00 mL = 1.00 mg) diluted to 1 L (see sec. 5.6.1).

TABLE 3.
SINGLE-OPERATOR ACCURACY AND PRECISION

Analyte	Sample type	Spike mg/L	Number of replicates	Mean recovery, %	Standard deviation, mg/L
Chloride	RW	0.050	7	97.7	0.0047
	DW	10.0	7	98.2	0.289
	SW	1.0	7	105.0	0.139
	WW	7.5	7	82.7	0.445
Fluoride	RW	0.24	7	103.1	0.0009
	DW	9.3	7	87.7	0.075
	SW	0.50	7	74.0	0.0038
	WW	1.0	7	92.0	0.011
Nitrate-N	RW	0.10	7	100.9	0.0041
	DW	31.0	7	100.7	0.356
	SW	0.50	7	100.0	0.0058
	WW	4.0	7	94.3	0.058
Nitrite-N	RW	0.10	7	97.7	0.0014
	DW	19.6	7	103.3	0.150
	SW	0.51	7	88.2	0.0053
	WW	0.52	7	100.0	0.018
o-Phosphate-P	RW	0.50	7	100.4	0.019
	DE	45.7	7	102.5	0.386
	SW	0.51	7	94.1	0.020
	WW	4.0	7	97.3	0.04
Sulfate	RW	1.02	7	102.1	0.066
	DW	98.5	7	104.3	1.475
	SW	10.0	7	111.6	0.709
	WW	12.5	7	134.9	0.466

RW = Reagent water. SW = Surface water.
DW = Drinking water. WW = Wastewater.

TABLE 4.
REPEATABILITY AND REPRODUCIBILITY FOR CHLORINE IN USED OILS BY BOMB OXIDATION AND ION CHROMATOGRAPHY

Average value, µg/g	Repeatability, µg/g	Reproducibility, µg/g
500	467	941
1,000	661	1,331
1,500	809	1,631
2,000	935	1,883
2,500	1,045	2,105
3,000	1,145	2,306

TABLE 5.
RECOVERY AND BIAS DATA FOR CHLORINE IN USED OILS BY BOMB OXIDATION AND ION CHROMATOGRAPHY

Amount Expected µg/g	Amount found µg/g	Bias, µg/g	Percent, bias
320	567	247	+77
480	773	293	+61
920	1,050	130	+14
1,498	1,694	196	+13
1,527	1,772	245	+16
3,029	3,026	-3	0
3,045	2,745	-300	-10

FIGURE 1
SCHEMATIC OF ION CHROMATOGRAPH

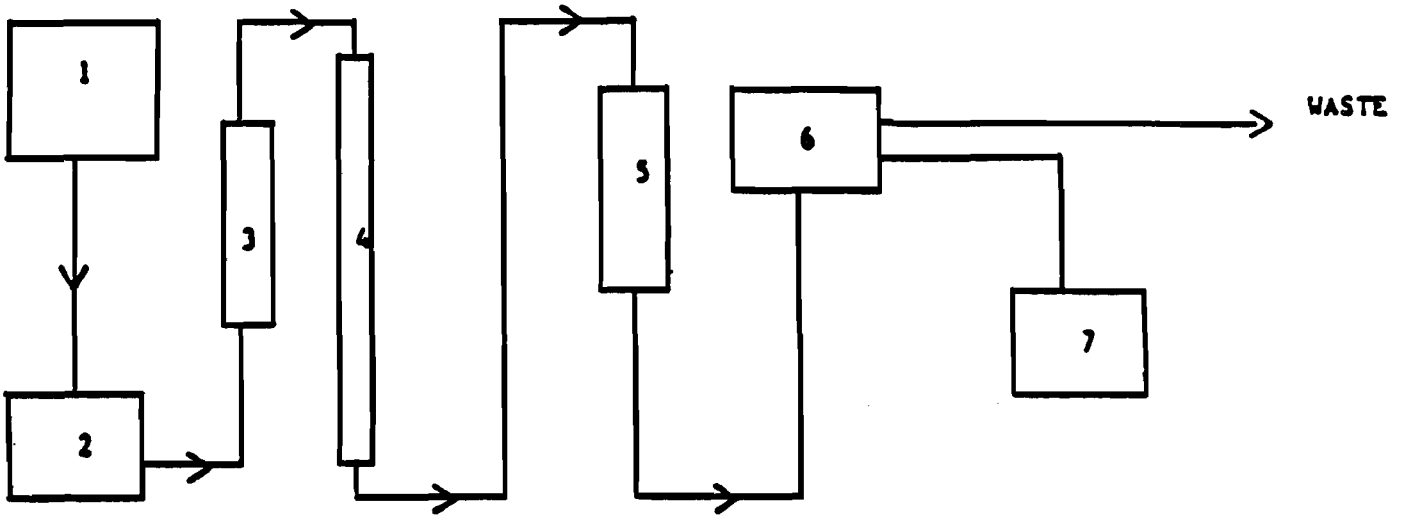

(1) Eluent reservoir
(2) Pump
(3) Precolumn
(4) Separator column
(5) Suppressor column
(6) Detector
(7) Recorder or integrator, or both

FIGURE 2
TYPICAL ANION PROFILE

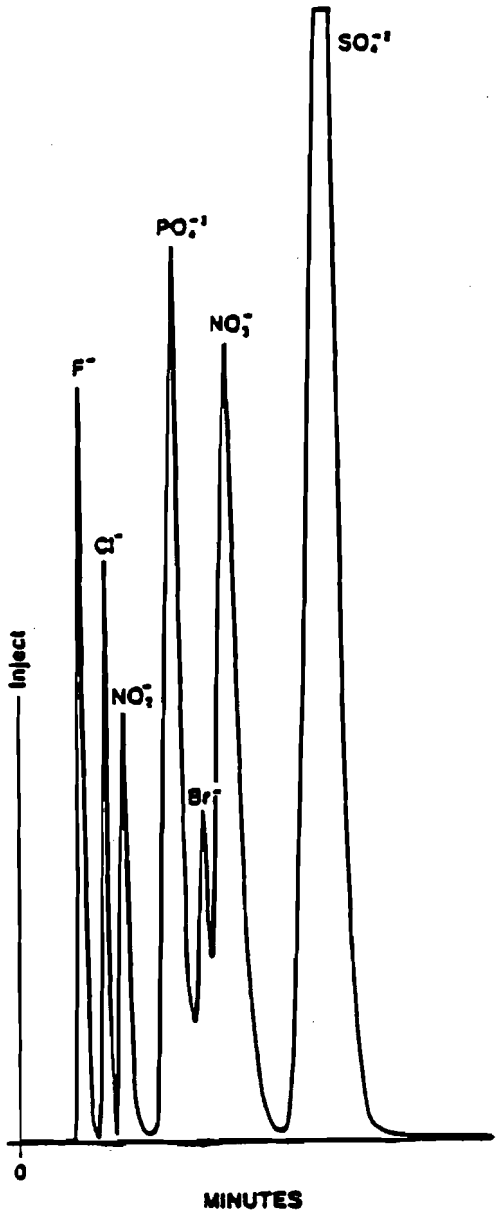

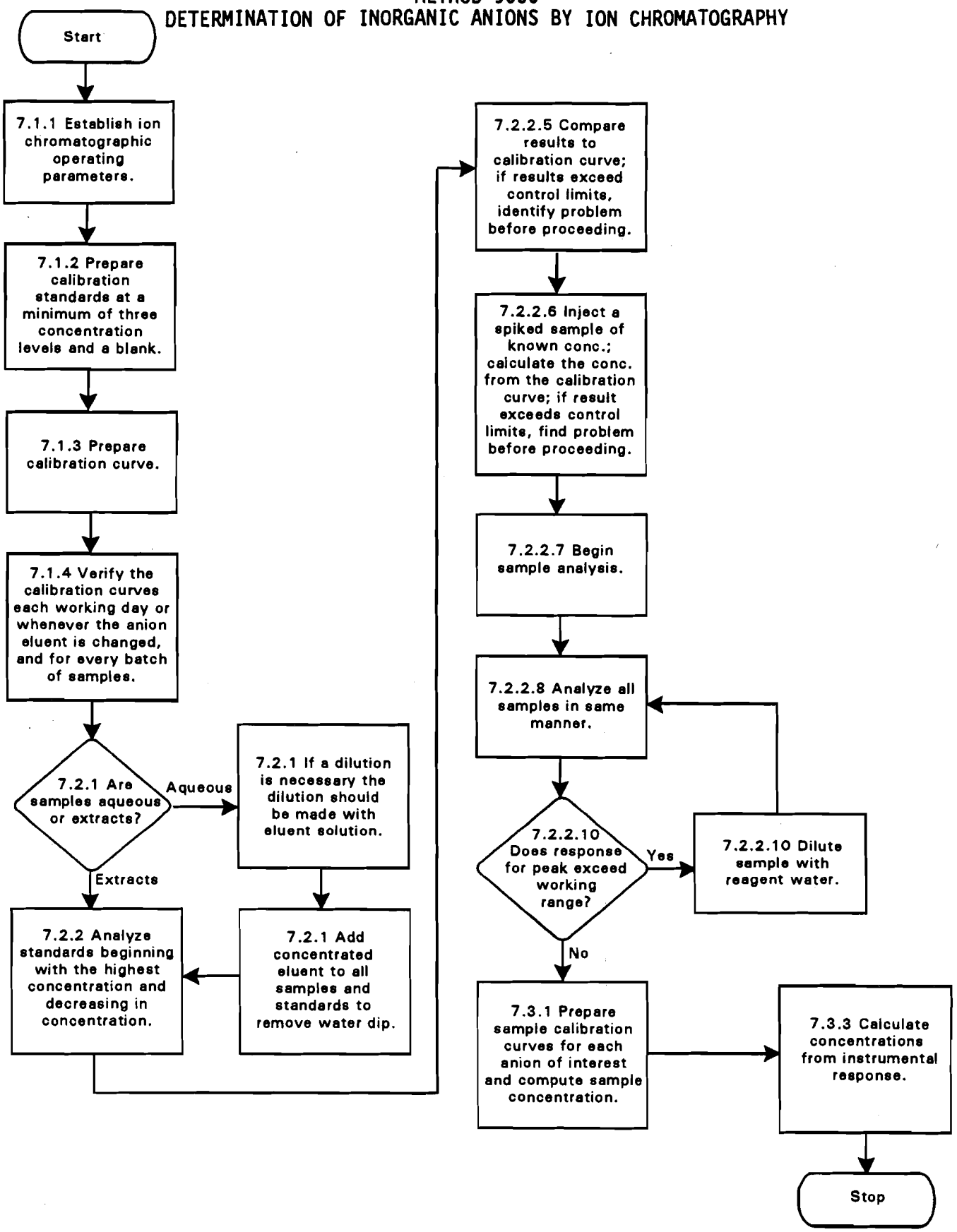
Start
7.1.1 Establish ion chromatographic operating parameters.
7.1.2 Prepare calibration standards at a minimum of three concentration levels and a blank.
7.1.3 Prepare calibration curve.
7.1.4 Verify the calibration curves each working day or whenever the anion eluent is changed, and for every batch of samples.
7.2.1 Are samples aqueous or extracts?
Aqueous
Extracts
7.2.1 If a dilution is necessary the dilution should be made with eluent solution.
7.2.1 Add concentrated eluent to all samples and standards to remove water dip.
7.2.2 Analyze standards beginning with the highest concentration and decreasing in concentration.
7.2.2.5 Compare results to calibration curve; if results exceed control limits, identify problem before proceeding.
7.2.2.6 Inject a spiked sample of known conc.; calculate the conc. from the calibration curve; if result exceeds control limits, find problem before proceeding.
7.2.2.7 Begin sample analysis.
7.2.2.8 Analyze all samples in same manner.
7.2.2.10 Does response for peak exceed working range?
Yes
7.2.2.10 Dilute sample with reagent water.
No
7.3.1 Prepare sample calibration curves for each anion of interest and compute sample concentration.
7.3.3 Calculate concentrations from instrumental response.
Stop

METHOD 9060

TOTAL ORGANIC CARBON

1.0 SCOPE AND APPLICATION

1.1 Method 9060 is used to determine the concentration of organic carbon in ground water, surface and saline waters, and domestic and industrial wastes. Some restrictions are noted in Sections 2.0 and 3.0.

1.2 Method 9060 is most applicable to measurement of organic carbon above 1 mg/L.

2.0 SUMMARY OF METHOD

2.1 Organic carbon is measured using a carbonaceous analyzer. This instrument converts the organic carbon in a sample to carbon dioxide (CO_2) by either catalytic combustion or wet chemical oxidation. The CO_2 formed is then either measured directly by an infrared detector or converted to methane (CH_4) and measured by a flame ionization detector. The amount of CO_2 or CH_4 in a sample is directly proportional to the concentration of carbonaceous material in the sample.

2.2 Carbonaceous analyzers are capable of measuring all forms of carbon in a sample. However, because of various properties of carbon-containing compounds in liquid samples, the manner of preliminary sample treatment as well as the instrument settings will determine which forms of carbon are actually measured. The forms of carbon that can be measured by Method 9060 are:

1. Soluble, nonvolatile organic carbon: e.g., natural sugars.

2. Soluble, volatile organic carbon: e.g., mercaptans, alkanes, low molecular weight alcohols.

3. Insoluble, partially volatile carbon: e.g., low molecular weight oils.

4. Insoluble, particulate carbonaceous materials: e.g., cellulose fibers.

5. Soluble or insoluble carbonaceous materials adsorbed or entrapped on insoluble inorganic suspended matter: e.g., oily matter adsorbed on silt particles.

2.3 Carbonate and bicarbonate are inorganic forms of carbon and must be separated from the total organic carbon value. Depending on the instrument manufacturer's instructions, this separation can be accomplished by either a simple mathematical subtraction, or by removing the carbonate and bicarbonate by converting them to CO_2 with degassing prior to analysis.

3.0 INTERFERENCES

3.1 Carbonate and bicarbonate carbon represent an interference under the terms of this test and must be removed or accounted for in the final calculation.

3.2 This procedure is applicable only to homogeneous samples which can be injected into the apparatus reproducibly by means of a microliter-type syringe or pipet. The openings of the syringe or pipet limit the maximum size of particle which may be included in the sample.

3.3 Removal of carbonate and bicarbonate by acidification and purging with nitrogen, or other inert gas, can result in the loss of volatile organic substances.

4.0 APPARATUS AND MATERIALS

4.1 Apparatus for blending or homogenizing samples: Generally, a Waring-type blender is satisfactory.

4.2 Apparatus for total and dissolved organic carbon:

4.2.1 Several companies manufacture analyzers for measuring carbonaceous material in liquid samples. The most appropriate system should be selected based on consideration of the types of samples to be analyzed, the expected concentration range, and the forms of carbon to be measured.

4.2.2 No specific analyzer is recommended as superior. If the technique of chemical oxidation is used, the laboratory must be certain that the instrument is capable of achieving good carbon recoveries in samples containing particulates.

5.0 REAGENTS

5.1 ASTM Type II water (ASTM D1193): Water should be monitored for impurities, and should be boiled and cooled to remove CO_2.

5.2 Potassium hydrogen phthalate, stock solution, 1,000 mg/L carbon: Dissolve 0.2128 g of potassium hydrogen phthalate (primary standard grade) in Type II water and dilute to 100.0 mL.

NOTE: Sodium oxalate and acetic acid are not recommended as stock solutions.

5.3 Potassium hydrogen phthalate, standard solutions: Prepare standard solutions from the stock solution by dilution with Type II water.

5.4 Carbonate-bicarbonate, stock solution, 1,000 mg/L carbon: Weigh 0.3500 g of sodium bicarbonate and 0.4418 g of sodium carbonate and transfer both to the same 100-mL volumetric flask. Dissolve with Type II water.

5.5 Carbonate-bicarbonate, standard solution: Prepare a series of standards similar to Step 5.3.

NOTE: This standard is not required by some instruments.

5.6 Blank solution: Use the same Type II water as was used to prepare the standard solutions.

6.0 SAMPLE COLLECTION, PRESERVATION, AND HANDLING

6.1 All samples must be collected using a sampling plan that addresses the considerations discussed in Chapter Nine of this manual.

6.2 Sampling and storage of samples in glass bottles is preferable. Sampling and storage in plastic bottles such as conventional polyethylene and cubitainers is permissible if it is established that the containers do not contribute contaminating organics to the samples.

NOTE: A brief study performed in the EPA Laboratory indicated that Type II water stored in new, 1-qt cubitainers did not show any increase in organic carbon after 2 weeks' exposure.

6.3 Because of the possibility of oxidation or bacterial decomposition of some components of aqueous samples, the time between sample collection and the start of analysis should be minimized. Also, samples should be kept cool (4°C) and protected from sunlight and atmospheric oxygen.

6.4 In instances where analysis cannot be performed within 2 hr from time of sampling, the sample is acidified (pH $\leq$ 2) with HCl or H_2SO_4.

7.0 PROCEDURE

7.1 Homogenize the sample in a blender.

NOTE: To avoid erroneously high results, inorganic carbon must be accounted for. The preferred method is to measure total carbon and inorganic carbon and to obtain the organic carbon by subtraction. If this is not possible, follow Steps 7.2 and 7.3 prior to analysis; however, volatile organic carbon may be lost.

7.2 Lower the pH of the sample to 2.

7.3 Purge the sample with nitrogen for 10 min.

7.4 Follow instrument manufacturer's instructions for calibration, procedure, and calculations.

7.5 For calibration of the instrument, a series of standards should be used that encompasses the expected concentration range of the samples.

7.6 Quadruplicate analysis is required. Report both the average and the range.

8.0 QUALITY CONTROL

8.1 All quality control data should be maintained and available for easy reference or inspection.

8.2 Employ a minimum of one blank per sample batch to determine if contamination or any memory effects are occurring.

8.3 Verify calibration with an independently prepared check standard every 15 samples.

8.4 Run one spike duplicate sample for every 10 samples. A duplicate sample is a sample brought through the whole sample preparation and analytical process.

9.0 METHOD PERFORMANCE

9.1 Precision and accuracy data are available in Method 415.1 of Methods for Chemical Analysis of Water and Wastes.

10.0 REFERENCES

1. Annual Book of ASTM Standards, Part 31, "Water," Standard D 2574-79, p. 469 (1976).

2. Standard Methods for the Examination of Water and Wastewater, 14th ed., p. 532, Method 505 (1975).

METHOD 9060

TOTAL ORGANIC CARBON

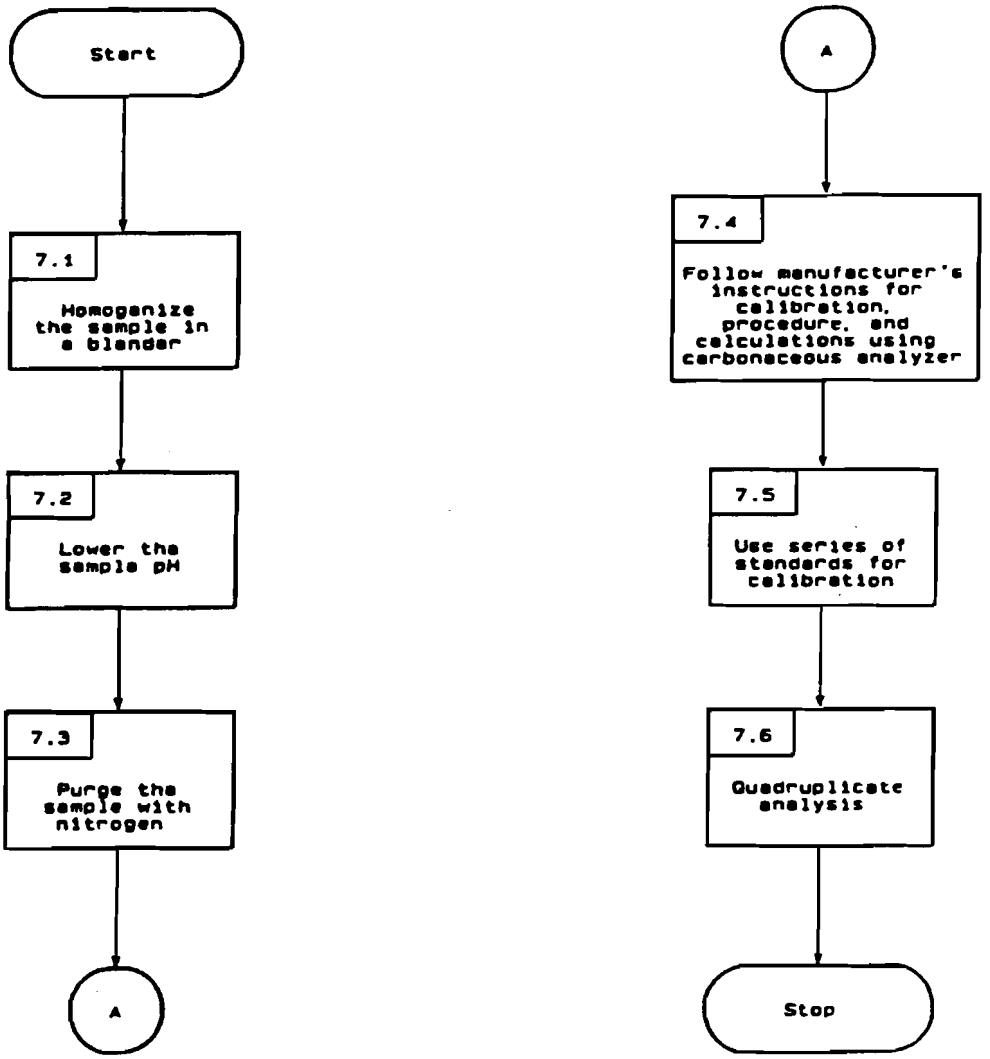

Revision 0
Date September 1986

METHOD 9065

PHENOLICS (SPECTROPHOTOMETRIC, MANUAL 4-AAP WITH DISTILLATION)

1.0 SCOPE AND APPLICATION

1.1 This method is applicable to the analysis of ground water, drinking, surface, and saline waters, and domestic and industrial wastes.

1.2 The method is capable of measuring phenolic materials at the 5 ug/L level when the colored end product is extracted and concentrated in a solvent phase using phenol as a standard.

1.3 The method is capable of measuring phenolic materials that contain more than 50 ug/L in the aqueous phase (without solvent extraction) using phenol as a standard.

1.4 It is not possible to use this method to differentiate between different kinds of phenols.

2.0 SUMMARY OF METHOD

2.1 Phenolic materials react with 4-aminoantipyrine in the presence of potassium ferricyanide at a pH of 10 to form a stable reddish-brown antipyrine dye. The amount of color produced is a function of the concentration of phenolic material.

3.0 INTERFERENCES

3.1 For most samples a preliminary distillation is required to remove interfering materials.

3.2 Color response of phenolic materials with 4-aminoantipyrine is not the same for all compounds. Because phenolic-type wastes usually contain a variety of phenols, it is not possible to duplicate a mixture of phenols to be used as a standard. For this reason phenol has been selected as a standard and any color produced by the reaction of other phenolic compounds is reported as phenol. This value will represent the minimum concentration of phenolic compounds present in the sample.

3.3 Interferences from sulfur compounds are eliminated by acidifying the sample to a pH of <4 with H_2SO_4 and aerating briefly by stirring.

3.4 Oxidizing agents such as chlorine, detected by the liberation of iodine upon acidification in the presence of potassium iodide, are removed immediately after sampling by the addition of an excess of ferrous ammonium sulfate. If chlorine is not removed, the phenolic compounds may be partially oxidized and the results may be low.

4.0 APPARATUS AND MATERIALS

4.1 Distillation apparatus: All glass, consisting of a 1-liter Pyrex distilling apparatus with Graham condenser.

4.2 pH meter.

4.3 Spectrophotometer: For use at 460 or 510 nm.

4.4 Funnels.

4.5 Filter paper.

4.6 Membrane filters.

4.7 Separatory funnels: 500- or 1,000-mL.

4.8 Nessler tubes: Short or long form.

5.0 REAGENTS

5.1 ASTM Type II water (ASTM D1193): Water should be monitored for impurities.

5.2 Sulfuric acid solution, H_2SO_4: Concentrated.

5.3 Buffer solution: Dissolve 16.9 g NH_4Cl in 143 mL concentrated NH_4OH and dilute to 250 mL with Type II water. Two mL of buffer should adjust 100 mL of distillate to pH 10.

5.4 Aminoantipyrine solution: Dissolve 2 g of 4-aminoantipyrine (4-AAP) in Type II water and dilute to 100 mL.

5.5 Potassium ferricyanide solution: Dissolve 8 g of $K_3Fe(CN)_6$ in Type II water and dilute to 100 mL.

5.6 Stock phenol solution: Dissolve 1.0 g phenol in freshly boiled and cooled Type II water and dilute to 1 liter (1 mL = 1 mg phenol).
NOTE: This solution is hydroscopic and toxic.

5.7 Working solution A: Dilute 10 mL stock phenol solution to 1 liter with Type II water (1 mL = 10 ug phenol).

5.8 Working solution B: Dilute 100 mL of working solution A to 1,000 mL with Type II water (1 mL = 1 ug phenol).

5.9 Chloroform.

5.10 Ferrous ammonium sulfate: Dissolve 1.1 g in 500 mL Type II water containing 1 mL concentrated H_2SO_4 and dilute to 1 liter with freshly boiled and cooled Type II water.

6.0 SAMPLE COLLECTION, PRESERVATION, AND HANDLING

6.1 All samples must have been collected using a sampling plan that addresses the considerations discussed in Chapter Nine of this manual.

6.2 Biological degradation is inhibited by the addition of H_2SO_4 to pH <4. Store at 4°C. The sample should be stable for 28 days.

7.0 PROCEDURE

7.1 Distillation:

7.1.1 Measure 500 mL of sample into a beaker. Lower the pH to approximately 4 with concentrated H_2SO_4 (1 mL/L), and transfer to the distillation apparatus.

7.1.2 Distill 450 mL of sample, stop the distillation, and when boiling ceases, add 50 mL of warm Type II water to the flask and resume distillation until 500 mL have been collected.

7.1.3 If the distillate is turbid, filter through a prewashed membrane filter.

7.2 Direct photometric method:

7.2.1 Using working solution A (5.6), prepare the following standards in 100-mL volumetric flasks:

Working Solution A (mL)	Concentration (ug/L)
0.0	0.0
0.5	50.0
1.0	100.0
2.0	200.0
5.0	500.0
8.0	800.0
10.0	1000.0

7.2.2 To 100 mL of distillate or to an aliquot diluted to 100 mL and/or standards, add 2 mL of buffer solution (5.2) and mix. The pH of the sample and standards should be 10 ± 0.2.

7.2.3 Add 2.0 mL aminoantipyrine solution (5.3) and mix.

7.2.4 Add 2.0 mL potassium ferricyanide solution (5.4) and mix.

7.2.5 After 15 min read absorbance at 510 nm.

7.3 Chloroform extraction method:

CAUTION: This method should be performed in a hood; chloroform is toxic.

7.3.1 Using working solution B (5.7), prepare the following standards. Standards may be prepared by pipetting the required volumes into the separatory funnels and diluting to 500 mL with Type II water:

Working Solution B (mL)	Concentration (ug/L)
0.0	0.0
3.0	6.0
5.0	10.0
10.0	20.0
20.0	40.0
25.0	50.0

7.3.2 Place 500 mL of distillate or an aliquot diluted to 500 mL in a separatory funnel. The sample should not contain more than 50 ug/L phenol.

7.3.3 To sample and standards add 10 mL of buffer solution (5.2) and mix. The pH should be 10 $\pm$ 0.2.

7.3.4 Add 3.0 mL aminoantipyrine solution (5.3) and mix.

7.3.5 Add 3.0 mL potassium ferricyanide solution (5.4) and mix.

7.3.6 After 3 min, extract with 25 mL of chloroform (5.9). Shake the separatory funnel at least 10 times, let $CHCl_3$ settle, shake again 10 times, and let chloroform settle again.

7.3.7 Filter chloroform extract through filter paper. Do not add more chloroform.

7.3.8 Read the absorbance of the samples and standards against the blank at 460 nm.

7.4 Calculation:

7.4.1 Prepare a standard curve by plotting the absorbance values of standards versus the corresponding phenol concentrations.

7.4.2 Obtain concentration value of sample directly from standard curve.

8.0 QUALITY CONTROL

8.1 All quality control data should be maintained and available for easy reference or inspection.

8.2 Calibration curves must be composed of a minimum of a blank and three standards. A calibration curve should be made for every hour of continuous sample analysis.

8.3 Dilute samples if they are more concentrated than the highest standard or if they fall on the plateau of a calibration curve.

8.4 Employ a minimum of one blank per sample batch to determine if contamination has occurred.

8.5 Verify calibration with an independently prepared check standard every 15 samples.

8.6 Run one spike duplicate sample for every 10 samples. A duplicate sample is a sample brought through the whole sample preparation and analytical process.

9.0 METHOD PERFORMANCE

9.1 In a single laboratory using sewage samples at concentrations of 3.8, 15, 43, and and 89 ug/L, the standard deviations were ±0.5, ±0.6, ±0.6, and ±1.0 ug/L, respectively. At concentrations of 73, 146, 299, and 447 ug/L, the standard deviations were ±1.0, ±1.8, ±4.2, and ±5.3 ug/L, respectively.

9.2 In a single laboratory using sewage samples at concentrations of 5.3 and 82 ug/L, the recoveries were 78% and 98%,respectively. At concentrations of 168 and 489 ug/L, the recoveries were 97% and 98%, respectively.

10.0 REFERENCES

1. Annual Book of ASTM Standards, Part 31, "Water," Standard D1783-70, p. 553 (1976).

2. Standard Methods for the Examination of Water and Wastewater, 14th ed., pp. 574-581, Method 510 through 510C (1975).

METHOD 9065

PHENOLICS (SPECTROPHOTOMETRIC, MANUAL 4-AAP WITH DISTILLATION)

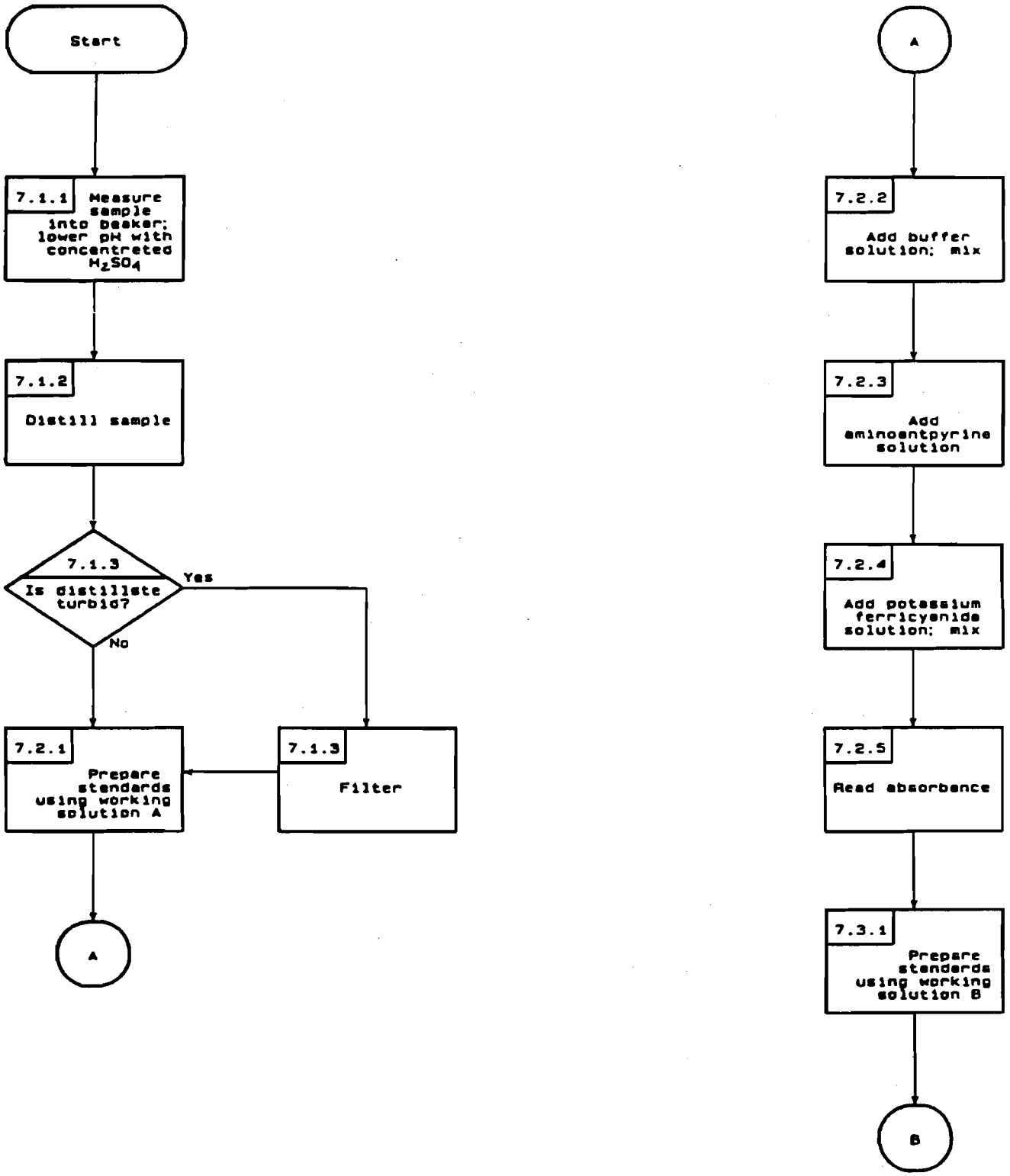

Revision 0
Date September 1986

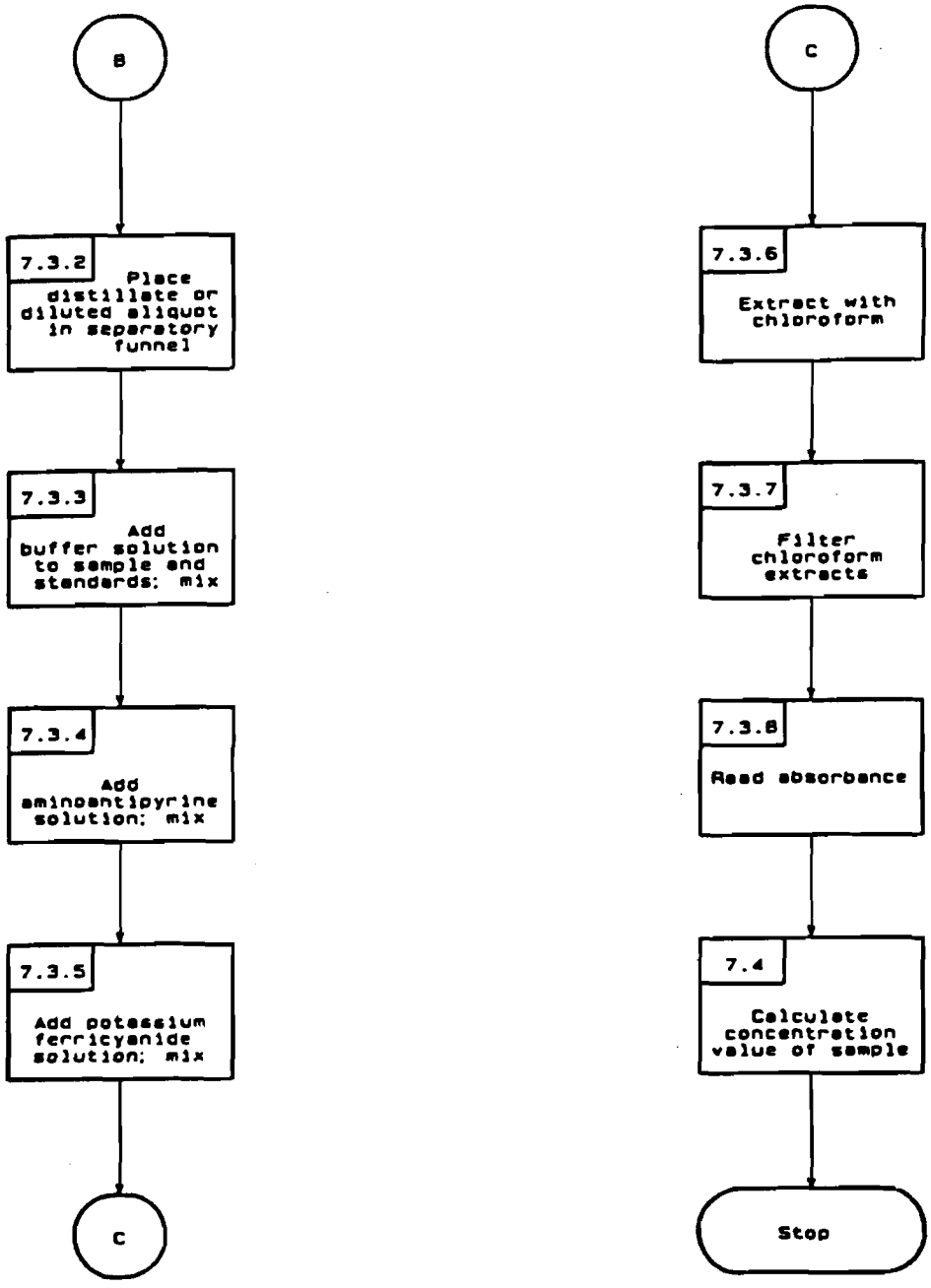
B
7.3.2
Place distillate or diluted aliquot in separatory funnel
7.3.3
Add buffer solution to sample and standards; mix
7.3.4
Add aminoantipyrine solution; mix
7.3.5
Add potassium ferricyanide solution; mix
C
C
7.3.6
Extract with chloroform
7.3.7
Filter chloroform extracts
7.3.8
Read absorbance
7.4
Calculate concentration value of sample
Stop

METHOD 9066

PHENOLICS (COLORIMETRIC, AUTOMATED 4-AAP WITH DISTILLATION)

1.0 SCOPE AND APPLICATION

1.1 This method is applicable to the analysis of ground water and of drinking, surface, and saline waters.

1.2 The method is capable of measuring phenolic materials from 2 to 500 ug/L in the aqueous phase using phenol as a standard.

2.0 SUMMARY OF METHOD

2.1 This automated method is based on the distillation of phenol and subsequent reaction of the distillate with alkaline ferricyanide ($K_3Fe(CN)_6$) and 4-amino-antipyrine (4-AAP) to form a red complex which is measured at 505 or 520 nm.

3.0 INTERFERENCES

3.1 Interferences from sulfur compounds are eliminated by acidifying the sample to a pH of <4.0 with H_2SO_4 and aerating briefly by stirring.

3.2 Oxidizing agents such as chlorine, detected by the liberation of iodine upon acidification in the presence of potassium iodide, are removed immediately after sampling by the addition of an excess of ferrous ammonium sulfate (5.5). If chlorine is not removed, the phenolic compounds may be partially oxidized and the results may be low.

3.3 Background contamination from plastic tubing and sample containers is eliminated by filling the wash receptacle by siphon (using Kel-F tubing) and using glass tubes for the samples and standards.

4.0 APPARATUS AND MATERIALS

4.1 Automated continuous-flow analytical instrument:

4.1.1 Sampler: Equipped with continuous mixer.

4.1.2 Manifold.

4.1.3 Proportioning pump II or III.

4.1.4 Heating bath with distillation coil.

4.1.5 Distillation head.

4.1.6 Colorimeter: Equipped with a 50 mm flowcell and 505 or 520 nm filter.

4.1.7 Recorder.

5.0 REAGENTS

5.1 ASTM Type II water (ASTM D1193): Water should be monitored for impurities.

5.2 Distillation reagent: Add 100 mL of concentrated phosphoric acid (85% H_3PO_4) to 800 mL of Type II water, cool and dilute to 1 liter.

5.3 Buffered potassium ferricyanide: Dissolve 2.0 g potassium ferricyanide, 3.1 g boric acid, and 3.75 g potassium chloride in 800 mL of Type II water. Adjust to pH of 10.3 with 1 N sodium hydroxide (5.3) and dilute to 1 liter. Add 0.5 mL of Brij-35 (available from Technicon). (Brij-35 is a wetting agent and is a proprietary Technicon product.) Prepare fresh weekly.

5.4 Sodium hydroxide (1 N): Dissolve 40 g NaOH in 500 mL of Type II water, cool and dilute to 1 liter.

5.5 4-Aminoantipyrine: Dissolve 0.65 g of 4-aminoantipyrine in 800 mL of Type II water and dilute to 1 liter. Prepare fresh each day.

5.6 Ferrous ammonium sulfate: Dissolve 1.1 g ferrous ammonium sulfate in 500 mL Type II water containing 1 mL H_2SO_4 and dilute to 1 liter with freshly boiled and cooled Type II water.

5.7 Stock phenol: Dissolve 1.00 g phenol in 500 mL of Type II water and dilute to 1,000 mL. Add 0.5 mL concentrated H_2SO_4 as preservative (1.0 mL = 1.0 mg phenol).

CAUTION: This solution is toxic.

5.8 Standard phenol solution A: Dilute 10.0 mL of stock phenol solution (5.6) to 1,000 mL (1.0 mL = 0.01 mg phenol).

5.9 Standard phenol solution B: Dilute 100.0 mL of standard phenol solution A (5.8) to 1,000 mL with Type II water (1.0 mL = 0.001 mg phenol).

5.10 Standard phenol solution C: Dilute 100.0 mL of standard phenol solution B (5.9) to 1,000 mL with Type II water (1.0 mL = 0.0001 mg phenol).

5.11 Using standard solution A, B, or C, prepare the following standards in 100-mL volumetric flasks. Each standard should be preserved by adding 2 drops of concentrated H_2SO_4 to 100.0 mL:

Standard Solution (mL)	Concentration (ug/L)
Solution C	
1.0	1.0
2.0	2.0
3.0	3.0
5.0	5.0
Solution B	
1.0	10.0
2.0	20.0
5.0	50.0
10.0	100.0
Solution A	
2.0	200.0
3.0	300.0
5.0	500.0

6.0 SAMPLE COLLECTION, PRESERVATION, AND HANDLING

6.1 All samples must have been collected using a sampling plan that addresses the considerations discussed in Chapter Nine of this manual.

6.2 Biological degradation is inhibited by the acidification to a pH <4 with H_2SO_4. The sample should be kept at 4°C and analyzed within 28 days of collection.

7.0 PROCEDURE

7.1 Set up the manifold as shown in Figure 1.

7.2 Fill the wash receptacle by siphon. Use Kel-F tubing with a fast flow (1 liter/hr).

7.3 Allow colorimeter and recorder to warm up for 30 min. Run a baseline with all reagents, feeding Type II water through the sample line. Use polyethylene tubing for sample line. When new tubing is used, about 2 hr may be required to obtain a stable baseline. This 2-hr time period may be necessary to remove the residual phenol from the tubing.

7.4 Place appropriate phenol standards in sampler in order of decreasing concentration. Complete loading of sampler tray with unknown samples, using glass tubes. If samples have not been preserved as instructed in Paragraph 6.2, add concentrated H_2SO_4 to 100 mL of sample. Run with sensitivity setting at full scale or 500.

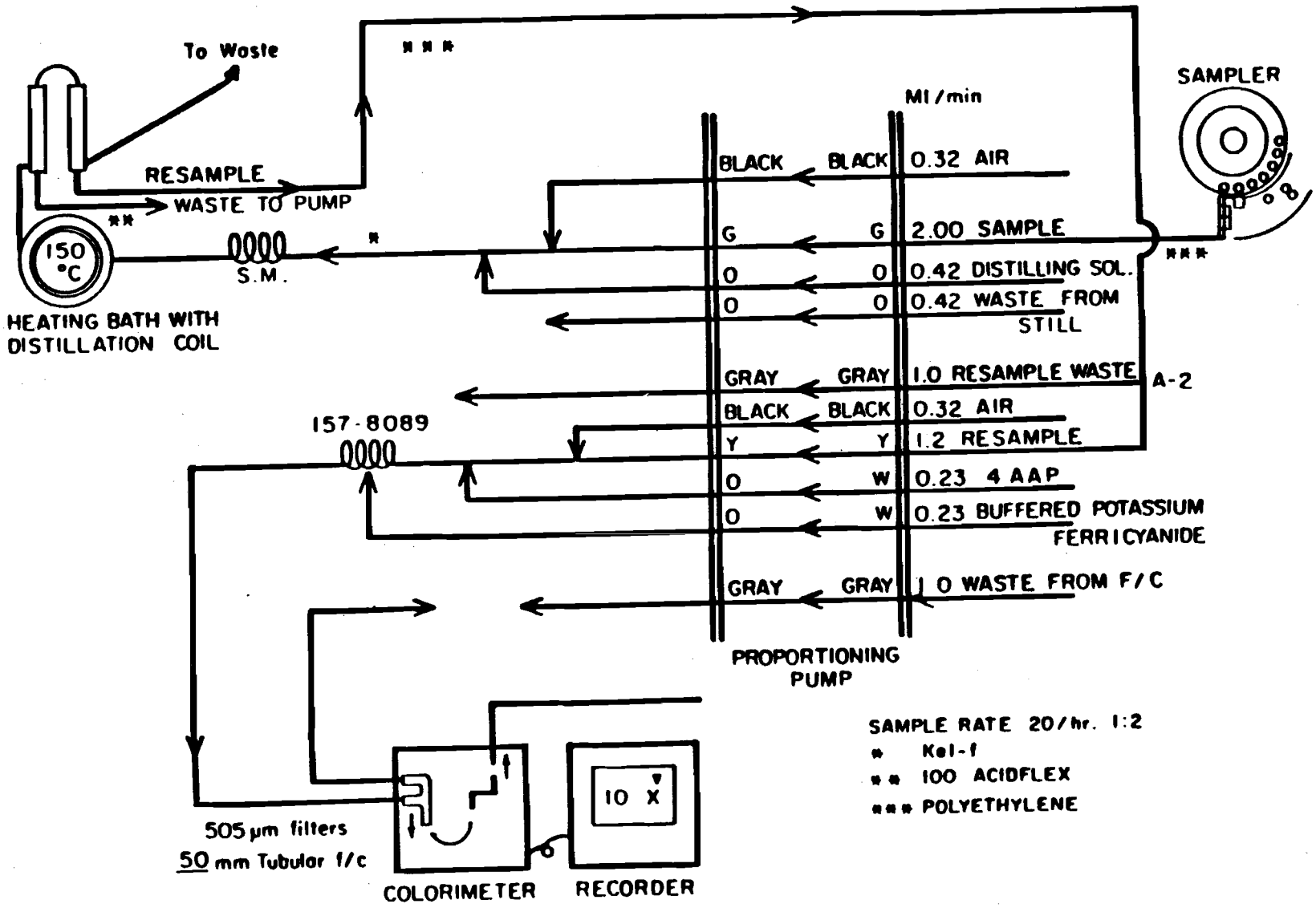

Figure 1. Phenol Autoanalyzer II

7.5 Switch sample from Type II water to sampler and begin analysis.

7.6 Calculation:

7.6.1 Prepare a linear standard curve by plotting peak heights of standards against concentration values. Compute concentration of samples by comparing sample peak heights with standards.

8.0 QUALITY CONTROL

8.1 All quality control data should be maintained and available for easy reference or inspection.

8.2 Calibration curves must be composed of a minimum of a blank and three standards. A calibration curve should be made for every hour of continuous sample analysis.

8.3 Dilute samples if they are more concentrated than the highest standard or if they fall on the plateau of a calibration curve.

8.4 Employ a minimum of one blank per sample batch to determine if contamination has occurred.

8.5 Verify calibration with an independently prepared check standard every 15 samples.

8.6 Run one spike duplicate sample for every 10 samples. A duplicate sample is a sample brought through the whole sample preparation and analytical process.

9.0 METHOD PERFORMANCE

9.1 In a single laboratory using sewage samples at concentrations of 3.8, 15, 43, and 89 ug/L, the standard deviations were ±0.5, ±0.6, ±0.6, and ±1.0 ug/L, respectively. At concentrations of 73, 146, 299, and 447 ug/L, the standard deviations were ±1.0, ±1.8, ±4.2, and ±5.3 ug/L, respectively.

9.2 In a single laboratory using sewage samples at concentrations of 5.3 and 82 ug/L, the recoveries were 78% and 98%, respectively. At concentrations of 168 and 489 ug/L, the recoveries were 97% and 98%, respectively.

10.0 REFERENCES

1. Gales, M.E. and R.L. Booth, "Automated 4AAP Phenolic Method," AWWA 68, 540 (1976).

2. Standard Methods for the Examination of Water and Wastewater, 14th ed., p. 574, Method 510, (1975).

3. Technicon AutoAnalyzer II Methodology, Industrial Method No.127-71W, AA II.

METHOD 9066

PHENOLICS (COLORIMETRIC, AUTOMATED 4-AAP WITH DISTILLATION)

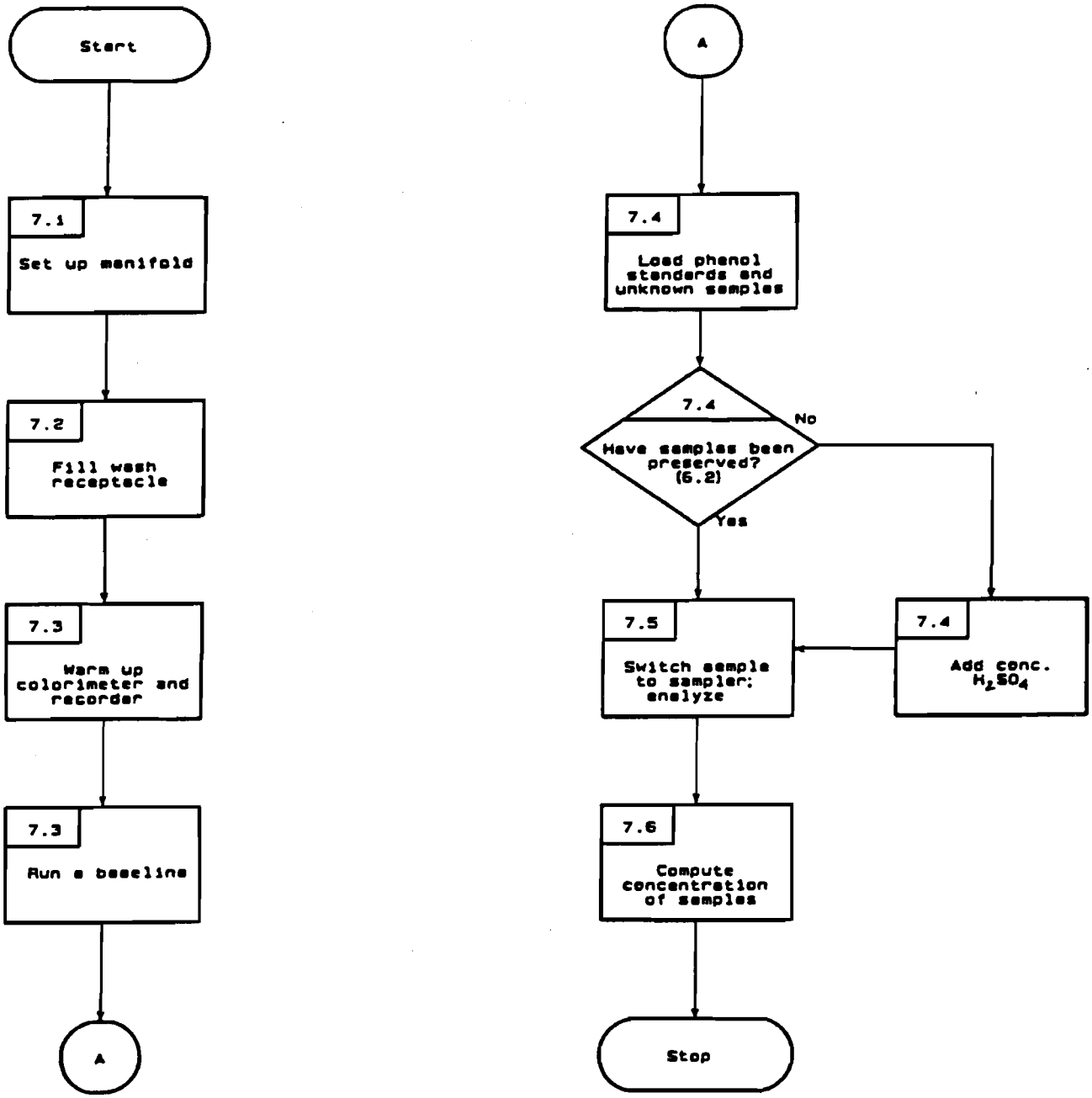

Revision 0
Date September 1986

METHOD 9067

PHENOLICS (SPECTROPHOTOMETRIC, MBTH WITH DISTILLATION)

1.0 SCOPE AND APPLICATION

1.1 This method is applicable to the analysis of ground water, drinking, surface, and saline waters, and domestic and industrial wastes.

1.2 The method is capable of measuring phenolic materials at the 2 ug/L level when the colored end product is extracted and concentrated in a solvent phase using phenol as a standard.

1.3 The method is capable of measuring phenolic materials that contain from 50 to 1,000 ug/L in the aqueous phase (without solvent extraction) using different kinds of phenols.

1.4 It is not possible to use this method to differentiate between different kinds of phenols.

2.0 SUMMARY OF METHOD

2.1 This method is based on the coupling of phenol with MBTH in an acid medium using ceric ammonium sulfate as an oxidant. The coupling takes place in the p-position; if this position is occupied, the MBTH reagent will react at a free o-position. The colors obtained have maximum absorbance from 460 to 595 nm. For phenol and most phenolic mixtures, the absorbance is 520 and 490 nm.

3.0 INTERFERENCES

3.1 For most samples a preliminary distillation is required to remove interfering materials.

3.2 Color response of phenolic materials with MBTH is not the same for all compounds. Because phenolic-type wastes usually contain a variety of phenols, it is not possible to duplicate a mixture of phenols to be used as a standard. For this reason, phenol has been selected as a standard and any color produced by the reaction of other phenolic compounds is reported as phenol. This value will represent the minimum concentration of phenolic compounds present in the sample.

3.3 Interferences from sulfur compounds are eliminated by acidifying the sample to a pH of less than 4.0 with H_2SO_4 and aerating briefly by stirring.

3.4 Oxidizing agents such as chlorine, detected by the liberation of iodine upon acidification in the presence of potassium iodide, are removed immediately after sampling by the addition of an excess of ferrous ammonium

sulfate (see Paragraph 5.11). If chlorine is not removed, the phenolic compounds may be partially oxidized and the results may be low.

3.5 Phosphate causes a precipitate to form; therefore, phosphoric acid should not be used for preservation. All glassware should be phosphate free.

3.5 High concentrations of aldehydes may cause interferences.

4.0 APPARATUS AND MATERIALS

4.1 Distillation apparatus: All glass, consisting of a 1-liter Pyrex distilling apparatus with Graham condenser.

4.2 pH Meter.

4.3 Spectrophotometer.

4.4 Funnels.

4.5 Filter paper.

4.6 Membrane filters.

4.7 Separatory funnels.

5.0 REAGENTS

5.1 ASTM Type II water (ASTM D1193): Water should be monitored for impurities.

5.2 Sulfuric acid, 1 N: Add 28 mL of concentrated H_2SO_4 to 900 mL of Type II water, mix, and dilute to 1 liter.

5.3 MBTH solution, 0.05%: Dissolve 0.1 g of 3-methyl-2-benzothiazolinone hydrazone hydrochloride in 200 mL of Type II water.

5.4 Ceric ammonium sulfate solution: Add 2.0 g of $Ce(SO_4)_2 \cdot 2(NH_4)_2SO_4 \cdot 2H_2O$ and 2.0 mL of concentrated H_2SO_4 to 150 mL of Type II water. After the solid has dissolved, dilute to 200 mL with Type II water.

5.5 Buffer solution: Dissolve, in the following order: 8 g of sodium hydroxide, 2 g EDTA (disodium salt), and 8 g boric acid in 200 mL of Type II water. Dilute to 250 mL with Type II water.

5.6 Working buffer solution: Make a working solution by mixing an appropriate volume of buffer solution (5.5) with an equal volume of ethanol.

5.7 Chloroform.

5.8 Stock phenol: Dissolve 1.00 g phenol in 500 mL of Type II water and dilute to 1,000 mL. Add 1 g $CuSO_4$ and 0.5 mL concentrated H_2SO_4 as preservative (1.0 mL = 1.0 mg phenol).

5.9 Standard phenol solution A: Dilute 10.0 mL of stock phenol solution (5.8) to 1,000 mL (1.0 mL = 0.01 mg phenol).

5.10 Standard phenol solution B: Dilute 100.0 mL of standard phenol solution A (5.9) to 1,000 mL with Type II water (1.0 mL = 0.001 mg phenol).

5.11 Ferrous ammonium sulfate: Dissolve 1.1 g ferrous ammonium sulfate in 500 mL Type II water containing 1 mL concentrated H_2SO_4 and dilute to 1 liter with freshly sorted and cooled Type II water.

6.0 SAMPLE COLLECTION, PRESERVATION, AND HANDLING

6.1 All samples must have been collected using a sampling plan that addresses the considerations discussed in Chapter Nine of this manual.

6.2 Biological degradation is inhibited by acidification to a pH of <4 with H_2SO_4. The sample should be kept at 4°C and analyzed within 28 days of collection.

7.0 PROCEDURE

7.1 Distillation:

7.1.1 To 500 mL of sample, adjust the pH to approximately 4 with 1 N sulfuric acid solution (5.2).

7.1.2 Distill over 450 mL of sample, add 50 mL of warm Type II water to flask, and resume distillation until 500 mL has been collected.

7.1.3 If the distillate is turbid, filter through a prewashed membrane filter.

7.2 Concentration above 50 ug/L:

7.2.1 To 100 mL of distillate or an aliquot diluted to 100 mL, add 4 mL of MBTH solution (5.3).

7.2.2 After 5 min, add 2.5 mL of ceric ammonium sulfate solution (5.4).

7.2.3 Wait another 5 min and add 7 mL of working buffer solution (5.6).

7.2.4 After 15 min, read the absorbance at 520 nm against a reagent blank. The color is stable for 4 hr.

7.3 Concentration below 50 ug/L:

7.3.1 To 500 mL of distillate in a separatory funnel, add 4 mL of MBTH solution (5.3).

7.3.2 After 5 min, add 2.5 mL of ceric ammonium sulfate solution (5.4).

7.3.3 After an additional 5 min, add 7 mL of working buffer solution (5.6).

7.3.4 After 15 min, add 25 mL of chloroform. Shake the separatory funnel at least 20 times. Allow the layer to separate and pass the chloroform layer through filter paper.

7.3.5 Read the absorbance at 490 nm against a reagent blank.

7.4 Calculation:

7.4.1 Prepare a standard curve by plotting absorbances against concentration values.

7.4.2 Obtain concentration value of sample directly from prepared standard curve.

8.0 QUALITY CONTROL

8.1 All quality control data should be maintained and available for easy reference or inspection.

8.2 Calibration curves must be composed of a minimum of a blank and three standards. A calibration curve should be made for every hour of continuous sample analysis.

8.3 Dilute samples if they are more concentrated than the highest standard or if they fall on the plateau of a calibration curve.

8.4 Employ a minimum of one blank per sample batch to determine if contamination has occurred.

8.5 Verify calibration with an independently prepared check standard every 15 samples.

8.6 Run one spike duplicate sample for every 10 samples. A duplicate sample is a sample brought through the whole sample preparation and analytical process.

9.0 METHOD PERFORMANCE

9.1 Precision and accuracy data are not available at this time.

10.0 REFERENCES

1. Friestad, H.O., E.E. Ott, and F.A. Gunther, "Automated Colorometric Micro Determination of Phenol by Oxidative Coupling with 3-Methyl-benzothiazolinone Hydrazone," Technicon International Congress, 1969.

2. Gales, M.E., "An Evaluation of the 3-Methyl-benzothiazolinone Hydrazone Method for the Determination of Phenols in Water and Wastewater," Analyst, 100, No. 1197, 841 (1975).

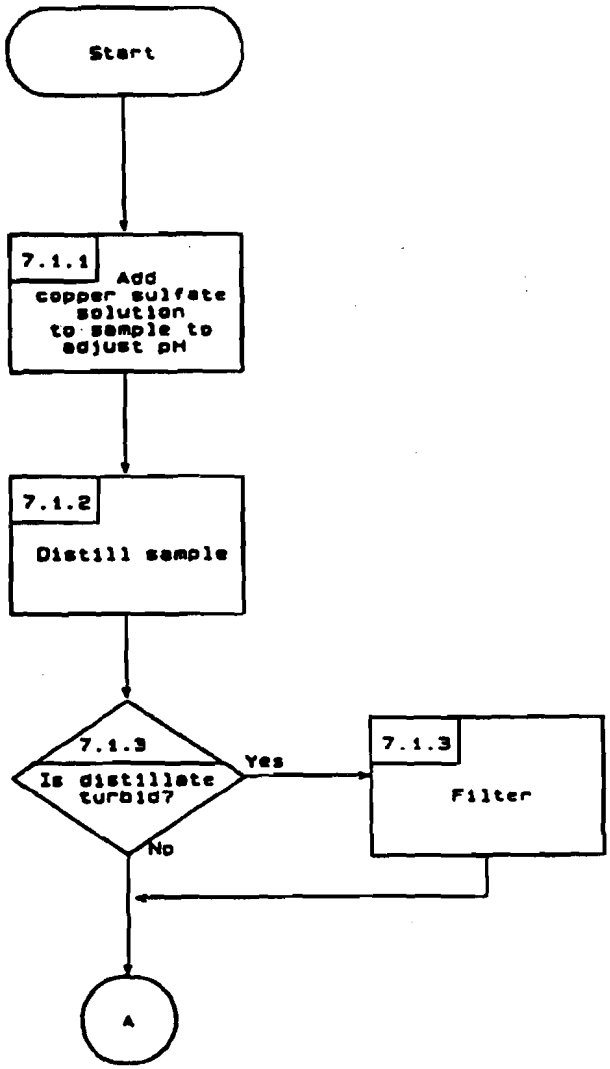
Start
7.1.1
Add copper sulfate solution to sample to adjust pH
7.1.2
Distill sample
7.1.3
Is distillate turbid?
Yes
No
7.1.3
Filter
A

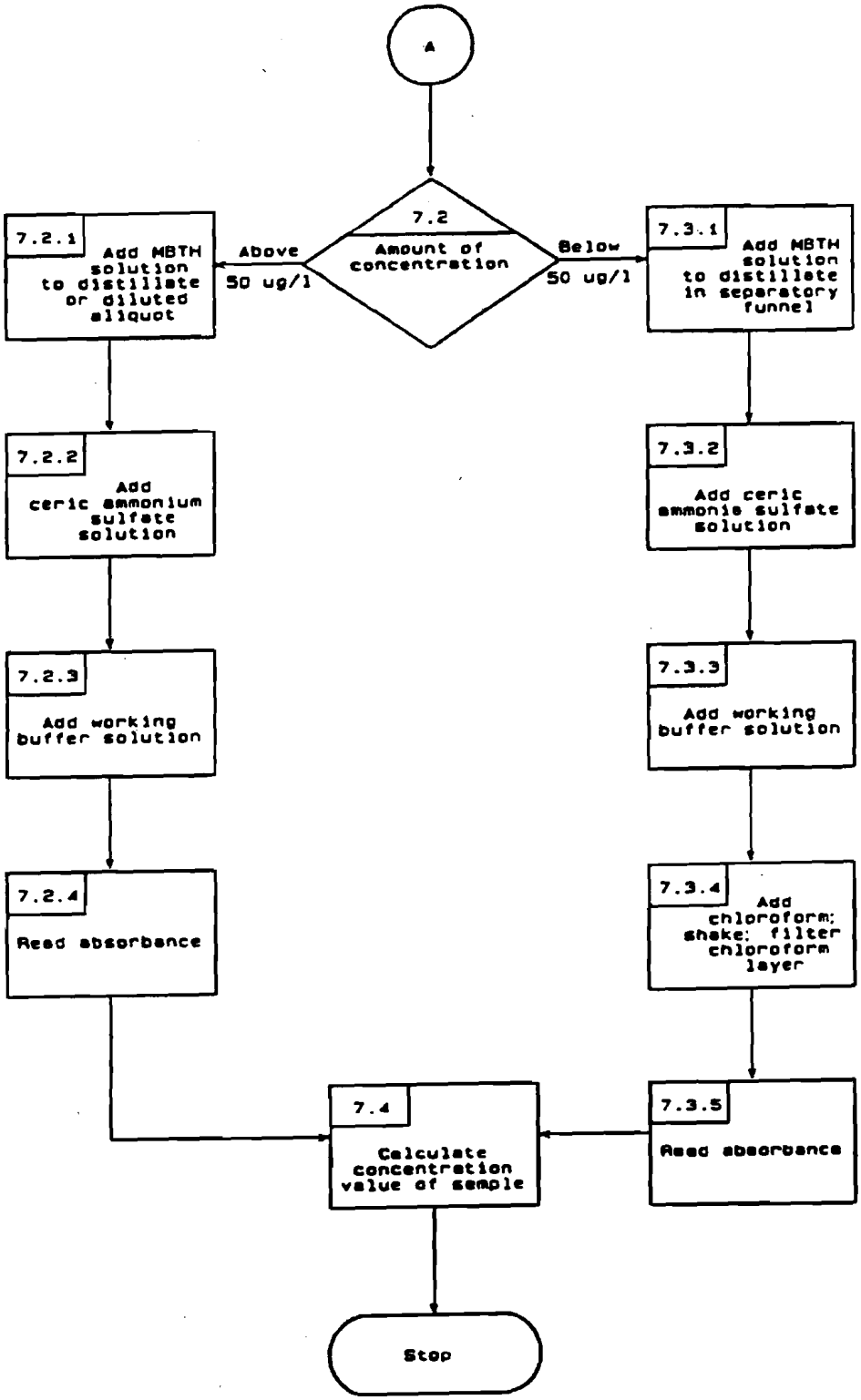
A
7.2
Amount of concentration
Above 50 ug/l
Below 50 ug/l
7.2.1
Add MBTH solution to distillate or diluted aliquot
7.2.2
Add ceric ammonium sulfate solution
7.2.3
Add working buffer solution
7.2.4
Read absorbance
7.3.1
Add MBTH solution to distillate in separatory funnel
7.3.2
Add ceric ammonia sulfate solution
7.3.3
Add working buffer solution
7.3.4
Add chloroform; shake; filter chloroform layer
7.3.5
Read absorbance
7.4
Calculate concentration value of sample
Stop

METHOD 9070

TOTAL RECOVERABLE OIL AND GREASE (GRAVIMETRIC, SEPARATORY FUNNEL EXTRACTION)

1.0 SCOPE AND APPLICATION

1.1 This method measures the fluorocarbon-113 extractable matter from surface and saline waters and industrial, domestic, and aqueous wastes. It is applicable to the determination of relatively nonvolatile hydrocarbons, vegetable oils, animal fats, waxes, soaps, greases, and related matter.

1.2 The method is not applicable to measurement of light hydrocarbons that volatilize at temperatures below 70°C. Petroleum fuels, from gasoline through No. 2 fuel oils, are completely or partially lost in the solvent removal operation.

1.3 Some crude oils and heavy fuel oils contain a significant percentage of residue-type materials that are not soluble in fluorocarbon-113. Accordingly, recoveries of these materials will be low.

1.4 The method covers the range from 5 to 1,000 mg/L of extractable material.

1.5 When determining the level of oil and grease in sludge samples, Method 9071 is to be employed.

2.0 SUMMARY OF METHOD

2.1 The 1-liter sample is acidified to a low pH (2) and serially extracted with fluorocarbon-113 in a separatory funnel. The solvent is evaporated from the extract and the residue is weighed.

3.0 INTERFERENCES

3.1 Matrix interferences will likely be coextracted from the sample. The extent of these interferences will vary from waste to waste, depending on the nature and diversity of the waste being analyzed.

4.0 APPARATUS AND MATERIALS

4.1 Separatory funnel: 2,000-mL, with Teflon stopcock.

4.2 Vacuum pump, or other source of vacuum.

4.3 Flask: Boiling, 125-mL (Corning No. 4100 or equivalent).

4.4 Distilling head: Claisen or equivalent.

4.5 Filter paper: Whatman No. 40, 11 cm.

5.0 REAGENTS

5.1 Hydrochloric acid, 1:1: Mix equal volumes of concentrated HCl and Type II water.

5.2 Fluorocarbon-113 (1,1,2-trichloro-1,2,2-trifluoroethane): Boiling point, 48°C.

5.3 Sodium sulfate: Anhydrous crystal.

5.4 ASTM Type II water (ASTM D1193): Water should be monitored for impurities.

6.0 SAMPLE COLLECTION, PRESERVATION, AND HANDLING

6.1 A representative sample should be collected in a 1-liter glass bottle. If analysis is to be delayed for more than a few hours, the sample is preserved by the addition of 5 mL HCl (5.1) at the time of collection and refrigerated at 4°C.

6.2 Collect a representative sample in a wide-mouth glass bottle that has been rinsed with the solvent to remove any detergent film and acidify in the sample bottle.

6.3 All samples must have been collected using a sampling plan that addresses the considerations discussed in Chapter Nine of this manual.

6.4 Because losses of grease will occur on sampling equipment, the collection of a composite sample is impractical. Individual portions collected at prescribed time intervals must be analyzed separately to obtain the average concentration over an extended period.

7.0 PROCEDURE

7.1 Mark the sample bottle at the water meniscus for later determination of sample volume. If the sample was not acidified at time of collection, add 5 mL HCl (5.1) to the sample bottle. After mixing the sample, check the pH by touching pH-sensitive paper to the cap to ensure that the pH is 2 or lower. Add more acid if necessary.

7.2 Pour the sample into a separatory funnel.

7.3 Tare a boiling flask (pre-dried in an oven at 103° and stored in a desiccator). Use gloves when handling flask to avoid adding fingerprints.

7.4 Add 30 mL fluorocarbon-113 (5.2) to the sample bottle and rotate the bottle to rinse the sides. Transfer the solvent into the separatory funnel. Extract by shaking vigorously for 2 min. Allow the layers to separate and filter the solvent layer through a funnel containing solvent-moistened filter paper.

NOTE: An emulsion that fails to dissipate can be broken by pouring about 1 g sodium sulfate (5.3) into the filter paper cone and slowly draining the emulsion through the salt. Additional 1-g portions can be added to the cone as required.

7.5 Repeat Step 7.4 twice more, with additional portions of fresh solvent, combining all solvent in the boiling flask.

7.6 Rinse the tip of the separatory funnel, the filter paper, and then the funnel with a total of 10-20 mL solvent and collect the rinsings in the flask.

7.7 Connect the boiling flask to the distilling head and evaporate the solvent by immersing the lower half of the flask in water at 70°C. Collect the solvent for reuse. A solvent blank should accompany each set of samples.

7.8 When the temperature in the distilling head reaches 50°C or the flask appears dry, remove the distilling head. To remove solvent vapor, sweep out the flask for 15 sec with air by inserting a glass tube that is connected to a vacuum source. Immediately remove the flask from heat source and wipe the outside to remove excess moisture and fingerprints.

7.9 Cool the boiling flask in a desiccator for 30 min and weigh.

7.10 Calculation:

$$\text{mg/L total oil and grease} = \frac{R - B}{V}$$

where:

R = residue, gross weight of extraction flask minus the tare weight;

B = blank determination, residue of equivalent volume of extraction solvent, mg; and

V = volume of sample in liters, determined by refilling sample bottle to calibration line and correcting for acid addition, if necessary.

8.0 QUALITY CONTROL

8.1 All quality control data should be maintained and available for easy reference or inspection.

8.2 Employ a minimum of one blank per sample batch to determine if contamination has occurred.

8.3 Verify calibration with an independently prepared check standard every 15 samples.

8.4 Run one spike duplicate sample for every 10 samples if possible. A duplicate sample is a sample brought through the whole sample preparation and analytical process.

9.0 METHOD PERFORMANCE

9.1 The two oil and grease methods (Methods 9070 and 9071) in this manual were tested on sewage by a single laboratory. This method determined the oil and grease level in the sewage to be 12.6 mg/L. When 1-liter portions of the sewage were dosed with 14.0 mg of a mixture of No. 2 fuel oil and Wesson oil, the recovery was 93%, with a standard deviation of ±0.9 mg/L.

10.0 REFERENCES

1. Blum, K.A., and M.J. Taras, "Determination of Emulsifying Oil in Industrial Wastewater," JWPCF Research Suppl., 40, R404 (1968).

2. Standard Methods for the Examination of Water and Wastewater, 14th ed., p. 515.

METHOD 9070

TOTAL RECOVERABLE OIL AND GREASE

(Gravimetric, Separatory Funnel Extraction)

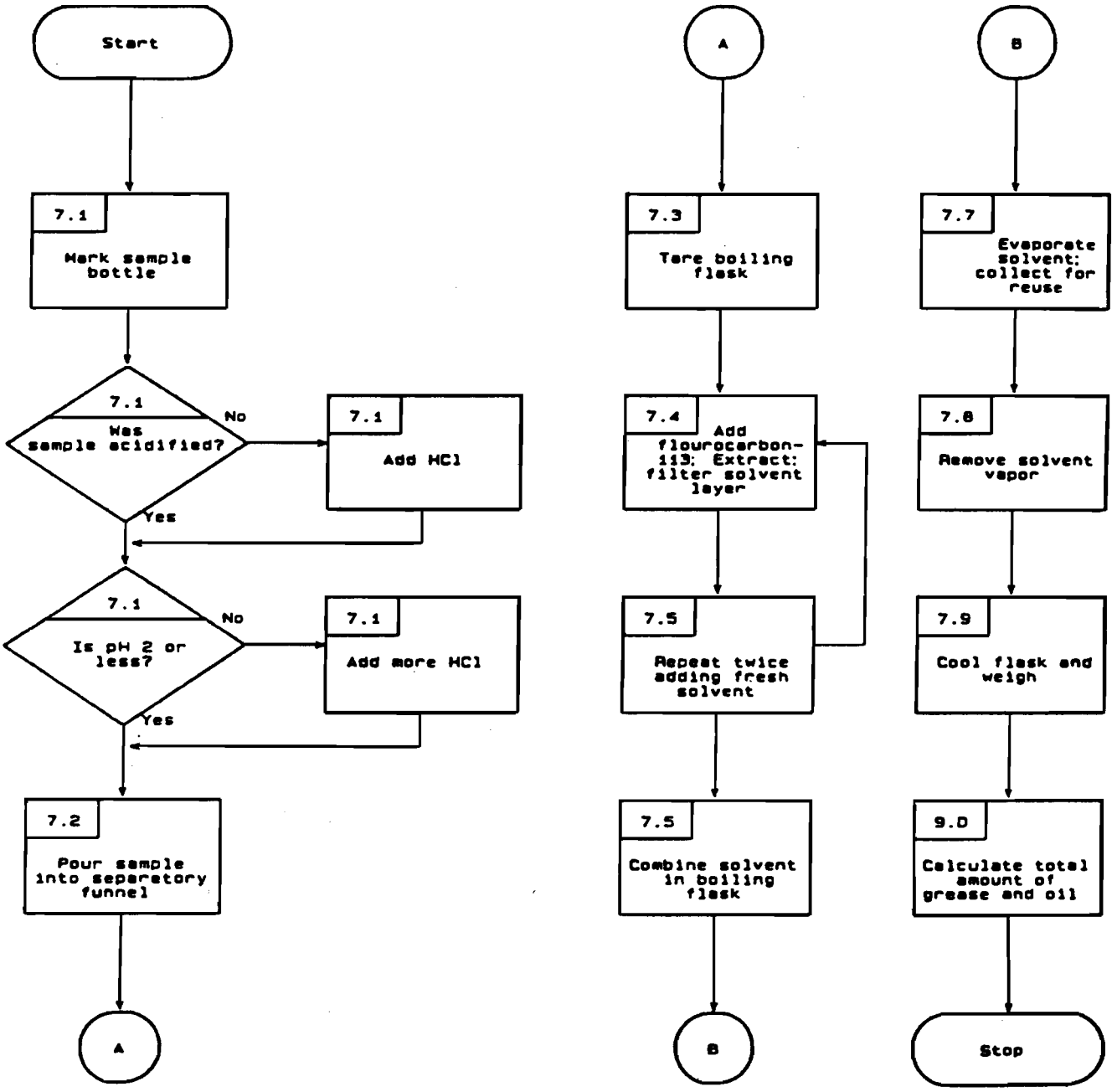

Revision 0
Date September 1986

METHOD 9071A

OIL AND GREASE EXTRACTION METHOD FOR SLUDGE AND SEDIMENT SAMPLES

1.0 SCOPE AND APPLICATION

1.1 Method 9071 is used to quantify low concentrations of oil and grease (10 mg/L) by chemically drying a wet sludge sample and then extracting via the Soxhlet apparatus. It is also used to recover oil and grease levels in sediment and soil samples.

1.2 Method 9071 is used when relatively polar, heavy petroleum fractions are present, or when the levels of nonvolatile greases challenge the solubility limit of the solvent.

1.3 Specifically, Method 9071 is suitable for biological lipids, mineral hydrocarbons, and some industrial wastewaters.

1.4 Method 9071 is <u>not</u> recommended for measurement of low-boiling fractions that volatilize at temperatures below 70°C.

2.0 SUMMARY OF METHOD

2.1 A 20-g sample of wet sludge with a known dry-solids content is acidified to pH 2.0 with 0.3 mL concentrated HCl.

2.2 Magnesium sulfate monohydrate will combine with 75% of its own weight in water in forming $MgSO_4 \bullet 7H_2O$ and is used to dry the acidified sludge sample.

2.3 Anhydrous sodium sulfate is used to dry samples of soil and sediment.

2.4 After drying, the oil and grease are extracted with trichlorotrifluoroethane (Fluorocarbon-113)[1] using the Soxhlet apparatus.

3.0 INTERFERENCES

3.1 The method is entirely empirical, and duplicate results can be obtained only by strict adherence to all details of the processes.

3.2 The rate and time of extraction in the Soxhlet apparatus must be exactly as directed because of varying solubilities of the different greases.

3.3 The length of time required for drying and cooling extracted material must be constant.

3.4 A gradual increase in weight may result due to the absorption of oxygen; a gradual loss of weight may result due to volatilization.

---

[1]Replacement solvent will be specified in a forthcoming regulation.

4.0 APPARATUS AND MATERIALS

4.1 Soxhlet extraction apparatus.

4.2 Analytical balance.

4.3 Vacuum pump or some other vacuum source.

4.4 Extraction thimble: Filter paper.

4.5 Glass wool or small glass beads to fill thimble.

4.6 Grease-free cotton: Extract nonabsorbent cotton with solvent.

4.7 Beaker: 150-mL.

4.8 pH Indicator to determine acidity.

4.9 Porcelain mortar.

4.10 Extraction flask: 150-mL.

4.11 Distilling apparatus: Waterbath at 70°C.

4.12 Desiccator.

5.0 REAGENTS

5.1 Reagent grade chemicals shall be used in all tests. Unless otherwise indicated, it is intended that all reagents shall conform to the specifications of the Committee on Analytical Reagents of the American Chemical Society, where such specifications are available. Other grades may be used, provided it is first ascertained that the reagent is of sufficiently high purity to permit its use without lessening the accuracy of the determination.

5.2 Reagent water. All references to water in this method refer to reagent water, as defined in Chapter One.

5.3 Concentrated hydrochloric acid (HCl).

5.4 Magnesium sulfate monohydrate: Prepare $MgSO_4 \bullet H_2O$ by spreading a thin layer in a dish and drying in an oven at 150°C overnight.

5.5 Sodium sulfate, granular, anhydrous (Na_2SO_4): Purify by heating at 400°C for 4 hours in a shallow tray, or by precleaning the sodium sulfate with methylene chloride. If the sodium sulfate is precleaned with methylene chloride, a method blank must be analyzed, demonstrating that there is no interference from the sodium sulfate.

5.6 Trichlorotrifluoroethane (1,1,2-trichloro-1,2,2-trifluoroethane): Boiling point, 47°C. The solvent should leave no measurable residue on evaporation; distill if necessary.[2]

6.0 SAMPLE COLLECTION, PRESERVATION, AND HANDLING

6.1 Transfers of the solvent trichlorotrifluoroethane should <u>not</u> involve any plastic tubing in the assembly.

6.2 Sample transfer implements: Implements are required to transfer portions of solid, semisolid, and liquid wastes from sample containers to laboratory glassware. Liquids may be transferred using a glass hypodermic syringe. Solids may be transferred using a spatula, spoon, or coring device.

6.3 Any turbidity or suspended solids in the extraction flask should be removed by filtering through grease-free cotton or glass wool.

7.0 PROCEDURE

7.1 Determination of Sample Dry Weight Fraction

Weigh 5-10 g of the sample into a tared crucible. Determine the dry weight fraction of the sample by drying overnight at 105°C.

> <u>NOTE:</u> The drying oven should be contained in a hood or vented. Significant laboratory contamination may result from a heavily contaminated hazardous waste sample.

Allow to cool in a desiccator before weighing:

$$\text{dry weight fraction} = \frac{\text{g of dry sample}}{\text{g of sample}}$$

7.2 Sample Handling

7.2.1 Sludge Samples

7.2.1.1 Weigh out 20 ± 0.5 g of wet sludge with a known dry-weight fraction (Section 7.1). Place in a 150-mL beaker.

7.2.1.2 Acidify to a pH of 2 with approximately 0.3 mL concentrated HCl.

7.2.1.3 Add 25 g prepared $Mg_2SO4 \bullet H_2O$ and stir to a smooth paste.

7.2.1.4 Spread paste on sides of beaker to facilitate evaporation. Let stand about 15-30 min or until substance is solidified.

---

[2]Replacement solvent will be specified in a forthcoming regulation.

7.2.1.5 Remove solids and grind to fine powder in a mortar.

7.2.1.6 Add the powder to the paper extraction thimble.

7.2.1.7 Wipe beaker and mortar with pieces of filter paper moistened with solvent and add to thimble.

7.2.1.8 Fill thimble with glass wool (or glass beads).

7.2.2 Sediment/Soil Samples

7.2.2.1 Decant and discard any water layer on a sediment sample. Mix sample thoroughly, especially composited samples. Discard any foreign objects such as sticks, leaves, and rocks.

7.2.2.2 Blend 10 g of the solid sample of known dry weight fraction with 10 g of anhydrous sodium sulfate, and place in an extraction thimble. The extraction thimble must drain freely for the duration of the extraction period.

7.3 Extraction

7.3.1 Extract in Soxhlet apparatus using trichlorotrifluorocarbon at a rate of 20 cycles/hr for 4 hr.

7.3.2 Using grease-free cotton, filter the extract into a pre-weighed 250-mL boiling flask. Use gloves to avoid adding fingerprints to the flask.

7.3.3 Rinse flask and cotton with solvent.

7.3.4 Connect the boiling flask to the distilling head and evaporate the solvent by immersing the lower half of the flask in water at 70°C. Collect the solvent for reuse. A solvent blank should accompany each analytical batch of samples.

7.3.5 When the temperature in the distilling head reaches 50°C or the flask appears dry, remove the distilling head. To remove solvent vapor, sweep out the flask for 15 sec with air by inserting a glass tube that is connected to a vacuum source. Immediately remove the flask from the heat source and wipe the outside to remove excess moisture and fingerprints.

7.3.6 Cool the boiling flask in a desiccator for 30 min and weigh.

7.3.7 Calculate oil and grease as a percentage of the total dry solids. Generally:

$$\% \text{ of oil and grease} = \frac{\text{gain in weight of flask (g)} \times 100}{\text{wt. of wet solids (g)} \times \text{dry weight fraction}}$$

8.0 QUALITY CONTROL

8.1 All quality control data should be maintained and available for easy reference and inspection. Refer to Chapter One for additional quality control guidelines.

8.2 Employ a minimum of one blank per analytical batch or twenty samples, whichever is more frequent, to determine if contamination has occurred.

8.3 Run one matrix duplicate and matrix spike sample every twenty samples or analytical batch, whichever is more frequent. Matrix duplicates and spikes are brought through the whole sample preparation and analytical process.

8.4 The use of corn oil is recommended as a reference sample solution.

9.0 METHOD PERFORMANCE

9.1 Two oil and grease methods (Methods 9070 and 9071) were tested on sewage by a single laboratory. When 1-liter portions of the sewage were dosed with 14.0 mg of a mixture of No. 2 fuel oil and Wesson oil, the recovery was 93%, with a standard deviation of $\pm$ 0.9 mg/L.

10.0 REFERENCES

1. Blum, K.A. and M.J. Taras, "Determination of Emulsifying Oil in Industrial Wastewater," JWPCF Research Suppl., 40, R404 (1968).

2. Standard Methods for the Examination of Water and Wastewater, 14th ed., p. 515, Method 502A (1975).

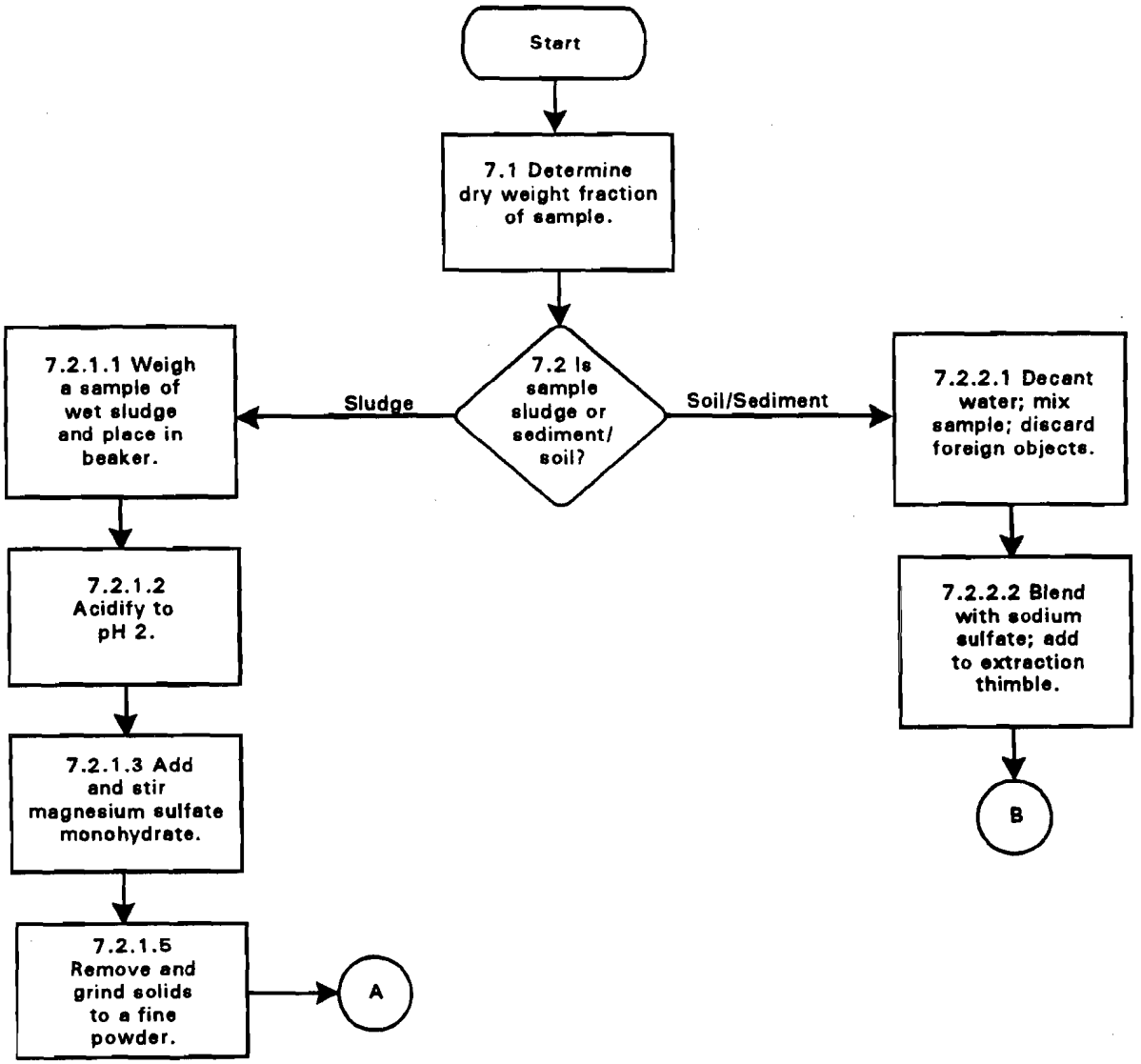
Start
7.1 Determine dry weight fraction of sample.
7.2 Is sample sludge or sediment/ soil?
Sludge
Soil/Sediment
7.2.1.1 Weigh a sample of wet sludge and place in beaker.
7.2.1.2 Acidify to pH 2.
7.2.1.3 Add and stir magnesium sulfate monohydrate.
7.2.1.5 Remove and grind solids to a fine powder.
A
7.2.2.1 Decant water; mix sample; discard foreign objects.
7.2.2.2 Blend with sodium sulfate; add to extraction thimble.
B

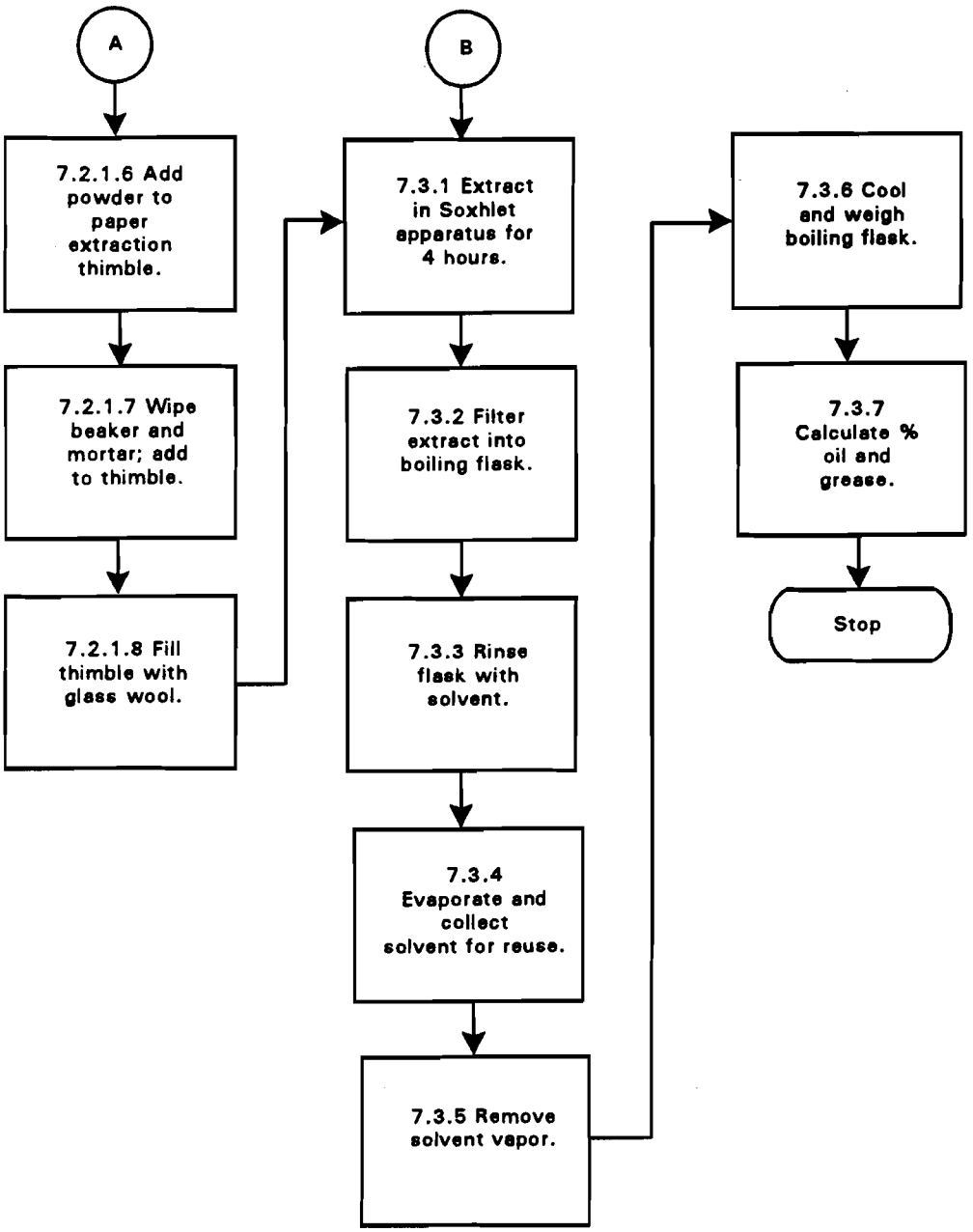
A
7.2.1.6 Add powder to paper extraction thimble.
7.2.1.7 Wipe beaker and mortar; add to thimble.
7.2.1.8 Fill thimble with glass wool.
B
7.3.1 Extract in Soxhlet apparatus for 4 hours.
7.3.2 Filter extract into boiling flask.
7.3.3 Rinse flask with solvent.
7.3.4 Evaporate and collect solvent for reuse.
7.3.5 Remove solvent vapor.
7.3.6 Cool and weigh boiling flask.
7.3.7 Calculate % oil and grease.
Stop

METHOD 9075

TEST METHOD FOR TOTAL CHLORINE IN NEW AND USED PETROLEUM PRODUCTS BY X-RAY FLUORESCENCE SPECTROMETRY (XRF)

1.0 SCOPE AND APPLICATION

1.1 This test method covers the determination of total chlorine in new and used oils, fuels, and related materials, including crankcase, hydraulic, diesel, lubricating and fuel oils, and kerosene. The chlorine content of petroleum products is often required prior to their use as a fuel.

1.2 The applicable range of this method is from 200 μg/g to percent levels.

1.3 Method 9075 is restricted to use by, or under the supervision of, analysts experienced in the operation of an X-ray fluorescence spectrometer and in the interpretation of the results.

2.0 SUMMARY OF METHOD

2.1 A well-mixed sample, contained in a disposable plastic sample cup, is loaded into an X-ray fluorescence (XRF) spectrometer. The intensities of the chlorine Kα and sulfur Kα lines are measured, as are the intensities of appropriate background lines. After background correction, the net intensities are used with a calibration equation to determine the chlorine content. The sulfur intensity is used to correct for absorption by sulfur.

3.0 INTERFERENCES

3.1 Possible interferences include metals, water, and sediment in the oil. Results of spike recovery measurements and measurements on diluted samples can be used to check for interferences.

Each sample, or one sample from a group of closely related samples, should be spiked to confirm that matrix effects are not significant. Dilution of samples that may contain water or sediment can produce incorrect results, so dilution should be undertaken with caution and checked by spiking. Sulfur interferes with the chlorine determination, but a correction is made.

Spike recovery measurements of used crankcase oil showed that diluting samples five to one allowed accurate measurements on approximately 80% of the samples. The other 20% of the samples were not accurately analyzed by XRF.

3.2 Water in samples absorbs X-rays emmitted by chlorine. For this inter-ference, use of as short an X-ray counting time as possible is beneficial. This appears to be related to stratification of samples into aqueous and nonaqueous layers while in the analyzer.

Although a correction for water may be possible, none is currently available. In general, the presence of any free water as a separate phase or a

water content greater than 25% will reduce the chlorine signal by 50 to 90%. See Sec. 6.4.

4.0 APPARATUS AND MATERIALS

4.1 XRF spectrometer, either energy dispersive or wavelength dispersive. The instrument must be able to accurately resolve and measure the intensity of the chlorine and sulfur lines with acceptable precision.

4.2 Disposable sample cups with suitable plastic film such as Mylar®.

5.0 REAGENTS

5.1 Purity of reagents. Reagent-grade chemicals shall be used in all tests. Unless otherwise indicated, it is intended that all reagents shall conform to the specifications of the Committee on Analytical Reagents of the American Chemical Society, where such specifications are available. Other grades may be used, provided it is first ascertained that the reagent is of sufficiently high purity to permit its use without lessening the accuracy of the determination.

5.2 Mineral oil, mineral spirits or paraffin oil (sulfur- and chlorine-free), for preparing standards and dilutions.

5.3 1-Chlorodecane (Aldrich Chemical Co.), 20.1% chlorine, or similar chlorine compound.

5.4 Di-n-butyl sulfide (Aldrich Chemical Co.), 21.9% sulfur by weight.

5.5 Quality control standards such as the standard reference materials NBS 1620, 1621, 1622, 1623, and 1624 for sulfur in oil standards; and NBS 1818 for chlorine in oil standards.

6.0 SAMPLE COLLECTION, PRESERVATION, AND HANDLING

6.1 All samples must be collected using a sampling plan that addresses the considerations discussed in Chapter Nine.

6.2 The collected sample should be kept headspace free prior to preparation and analysis to minimize volatilization losses of organic halogens. Because waste oils may contain toxic and/or carcinogenic substances, appropriate field and laboratory safety procedures should be followed.

6.3 Laboratory sampling of the sample should be performed on a well-mixed sample of oil. The mixing should be kept to a minimum and carried out as nearly headspace free as possible to minimize volatilization losses of organic halogens.

6.4 Free water, as a separate phase, should be removed and cannot be analyzed by this method.

7.0 PROCEDURE

7.1 Calibration and standardization.

7.1.1 Prepare primary calibration standards by diluting the chlorodecane and n-butyl sulfide with mineral spirits or similar material.

7.1.2 Prepare working calibration standards that contain sulfur, chlorine, or both according to the following table:

Cl: 500, 1,000, 2,000, 4,000, and 6,000 μg/g
S: 0.5, 1.0, and 1.5% sulfur

1.	0.5% S, 1,000 μg/g Cl	5.	1.0% S, 6,000 μg/g Cl
2.	0.5% S, 4,000 μg/g Cl	6.	1.5% S, 1,000 μg/g Cl
3.	1.0% S, 500 μg/g Cl	7.	1.5% S, 4,000 μg/g Cl
4.	1.0% S, 2,000 μg/g Cl	8.	1.5% S, 6,000 μg/g Cl

Once the correction factor for sulfur interference with chlorine is determined, fewer standards may be required.

7.1.3 Measure the intensity of the chlorine Kα line and the sulfur Kα line as well as the intensity of a suitably chosen background. Based on counting statistics, the relative standard deviation of each peak measurement should be 1% or less.

7.1.4 Determine the net chlorine and sulfur intensities by correcting each peak for background. Do this for all of the calibration standards as well as for a paraffin blank.

7.1.5 Obtain a linear calibration curve for sulfur by performing a least squares fit of the net sulfur intensity to the standard concentrations, including the blank. The chlorine content of a standard should have little effect on the net sulfur intensity.

7.1.6 The calibration equation for chlorine must include a correction term for the sulfur concentration. A suitable equation follows:

$$Cl = (mI + b)\ (1 + k^{*}S) \qquad (1)$$

where:

I = net chlorine intensity
m, b, k* = adjustable parameters
S = sulfer concentration

Using a least squares procedure, the above equation or a suitable substitute should be fitted to the data. Many XRF instruments are equipped with suitable computer programs to perform this fit. In any case, the resulting equation should be shown to be accurate by analysis of suitable standard materials.

7.2 Analysis.

7.2.1 Prepare a calibration curve as described in Sec. 7.1. By periodically measuring a very stable sample containing both sulfur and chlorine, it may be possible to use the calibration equations for more than 1 day. During each day, the suitability of the calibration curve should be checked by analyzing standards.

7.2.2 Determine the net chlorine and sulfur intensities for a sample in the same manner as done for the standards.

7.2.3 Determine the chlorine and sulfur concentrations of the samples from the calibration equations. If the sample concentration for either element is beyond the range of the standards, the sample should be diluted with mineral oil and reanalyzed.

8.0 QUALITY CONTROL

8.1 Refer to Chapter One for specific quality control procedures.

8.2 One sample in ten should be analyzed in triplicate and the relative standard deviation reported. For each triplicate, a separate preparation should be made, starting from the original sample.

8.3 Each sample, or one sample in ten from a group of similar samples, should be spiked with the elements of interest by adding a known amount of chlorine or sulfur to the sample. The spiked amount should be between 50% and 200% of the sample concentration, but the minimum addition should be at least five times the limit of detection. The percent recovery should be reported and should be between 80% and 120%. Any sample suspected of containing >25% water should also be spiked with organic chlorine.

8.4 Quality control standard check samples should be analyzed every day and should agree within 10% of the expected value of the standard.

9.0 METHOD PERFORMANCE

9.1 These data are based on 47 data points obtained by seven laboratories who each analyzed four used crankcase oils and three fuel oil blends with crankcase in duplicate. A data point represents one duplicate analysis of a sample. Two data points were determined to be outliers and are not included in these results.

9.2 Precision. The precision of the method as determined by the statistical examination of interlaboratory test results is as follows:

Repeatability - The difference between successive results obtained by the same operator with the same apparatus under constant operating conditions on identical test material would exceed, in the long run, in the normal and correct operation of the test method, the following values only in 1 case in 20 (see Table 1):

$$Repeatability = 5.72\sqrt{x}*$$

*where x is the average of two results in μg/g.

Reproducibility - The difference between two single and independent results obtained by different operators working in different laboratories on identical test material would exceed, in the long run, the following values only in 1 case in 20:

$$Reproducibility = 9.83\sqrt{x}*$$

*where x is the average value of two results in μg/g.

9.3 Bias. The bias of this test method varies with concentration, as shown in Table 2:

Bias = Amount found - Amount expected.

10.0 REFERENCE

1. Gaskill, A.; Estes, E.D.; Hardison, D.L.; and Myers, L.E. Validation of Methods for Determining Chlorine in Used Oils and Oil Fuels. Prepared for U.S. Environmental Protection Agency, Office of Solid Waste. EPA Contract No. 68-01-7075, WA 80. July 1988.

TABLE 1. REPEATABILITY AND REPRODUCIBILITY FOR CHLORINE IN USED OILS BY X-RAY FLUORESCENCE SPECTROMETRY

Average value, µg/g	Repeatability, µg/g	Reproducibility, µg/g
500	128	220
1,000	181	311
1,500	222	381
2,000	256	440
2,500	286	492
3,000	313	538

TABLE 2. RECOVERY AND BIAS DATA FOR CHLORINE IN USED OILS BY X-RAY FLUORESCENCE SPECTROMETRY

Amount expected, µg/g	Amount found, µg/g	Bias, µg/g	Percent bias
320	278	-42	-13
480	461	-19	-4
920	879	-41	-4
1,498	1,414	-84	-6
1,527	1,299	-228	-15
3,029	2,806	-223	-7
3,045	2,811	-234	-8

METHOD 9075
TEST METHOD FOR TOTAL CHLORINE IN NEW AND USED
PETROLEUM PRODUCTS BY X-RAY FLUORESCENCE SPECTROMETRY (XRF)

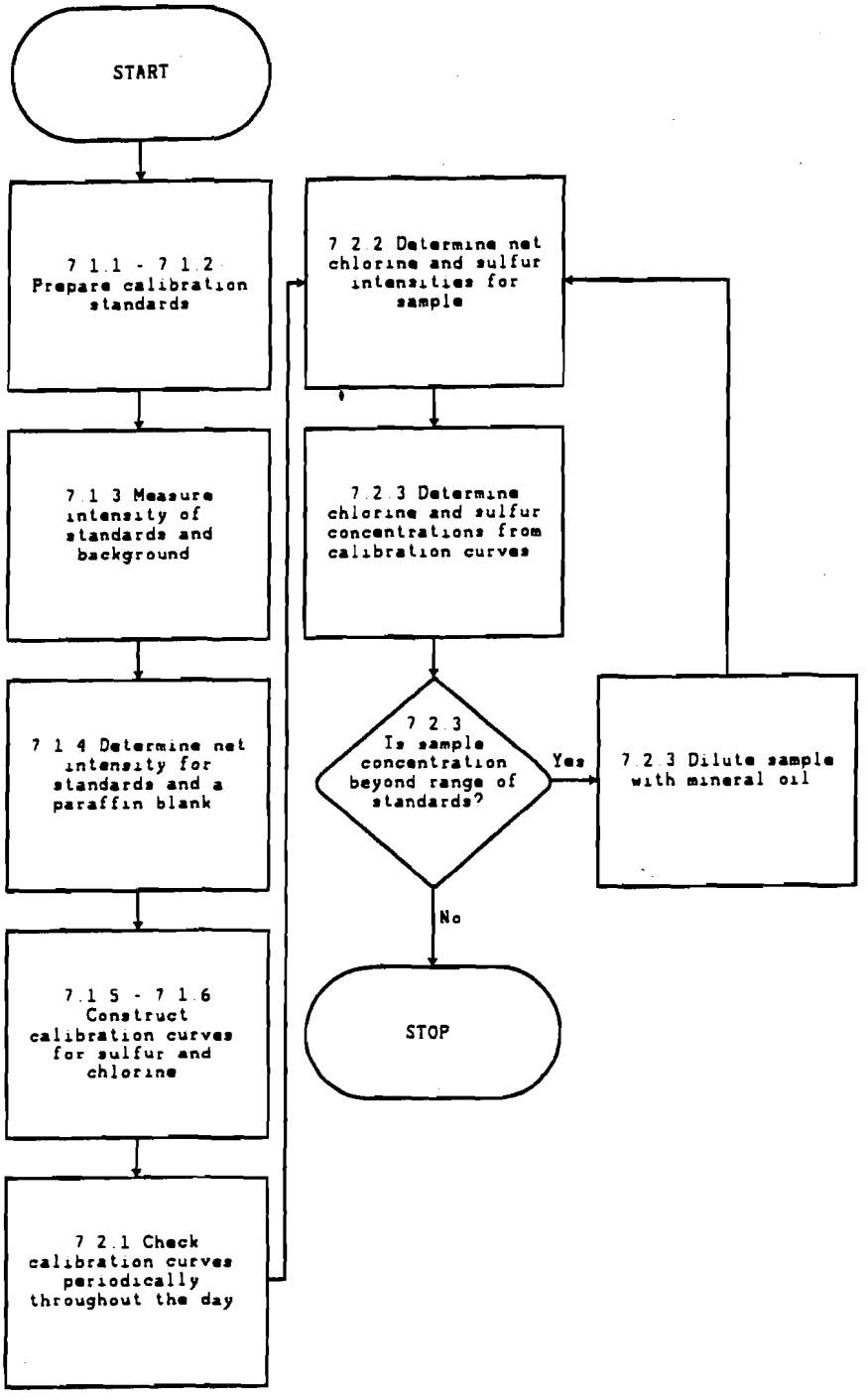

METHOD 9076

TEST METHOD FOR TOTAL CHLORINE IN NEW AND USED PETROLEUM PRODUCTS BY OXIDATIVE COMBUSTION AND MICROCOULOMETRY

1.0 SCOPE AND APPLICATION

1.1 This test method covers the determination of total chlorine in new and used oils, fuels and related materials, including crankcase, hydraulic, diesel, lubricating and fuel oils, and kerosene by oxidative combustion and microcoulometry. The chlorine content of petroleum products is often required prior to their use as a fuel.

1.2 The applicable range of this method is from 10 to 10,000 µg/g chlorine.

2.0 SUMMARY OF METHOD

2.1 The sample is placed in a quartz boat at the inlet of a high-temperature quartz combustion tube. An inert carrier gas such as argon, carbon dioxide, or nitrogen sweeps across the inlet while oxygen flows into the center of the combustion tube. The boat and sample are advanced into a vaporization zone of approximately 300°C to volatilize the light ends. Then the boat is advanced to the center of the combustion tube, which is at 1,000°C. The oxygen is diverted to pass directly over the sample to oxidize any remaining refractory material. All during this complete combustion cycle, the chlorine is converted to chloride and oxychlorides, which then flow into an attached titration cell where they quantitatively react with silver ions. The silver ions thus consumed are coulometrically replaced. The total current required to replace the silver ions is a measure of the chlorine present in the injected samples.

2.2 The reaction occurring in the titration cell as chloride enters is:

$$Cl^- + Ag^+ \text{ -------> } AgCl \qquad (1)$$

The silver ion consumed in the above reaction is generated coulometrically thus:

$$Ag^o \text{ -------> } Ag^+ + e^- \qquad (2)$$

2.3 These microequivalents of silver are equal to the number of microequivalents of titratable sample ion entering the titration cell.

3.0 INTERFERENCES

3.1 Other titratable halides will also give a positive response. These titratable halides include HBr and HI (HOBr + HOI do not precipitate silver). Because these oxyhalides do not react in the titration cell, approximately 50% microequivalent response is detected from bromine and iodine.

3.2 Fluorine as fluoride does not precipitate silver, so it is not an interferant nor is it detected.

3.3 This test method is applicable in the presence of total sulfur concentrations of up to 10,000 times the chlorine level.

4.0 APPARATUS AND MATERIALS[1]

4.1 Combustion furnace. The sample should be oxidized in an electric furnace capable of maintaining a temperature of 1,000°C to oxidize the organic matrix.

4.2 Combustion tube, fabricated from quartz and constructed so that a sample, which is vaporized completely in the inlet section, is swept into the oxidation zone by an inert gas where it mixes with oxygen and is burned. The inlet end of the tube connects to a boat insertion device where the sample can be placed on a quartz boat by syringe, micropipet, or by being weighed externally. Two gas ports are provided, one for an inert gas to flow across the boat and one for oxygen to enter the combustion tube.

4.3 Microcoulometer, Stroehlein Coulomat 702 CL or equivalent, having variable gain and bias control, and capable of measuring the potential of the sensing-reference electrode pair, and comparing this potential with a bias potential, and applying the amplified difference to the working-auxiliary electrode pair so as to generate a titrant. The microcoulometer output signal shall be proportional to the generating current. The microcoulometer may have a digital meter and circuitry to convert this output signal directly to a mass of chlorine (e.g., nanograms) or to a concentration of chlorine (e.g., micrograms of chlorine or micrograms per gram).

4.4 Titration cell. Two different configurations have been applied to coulometrically titrate chlorine for this method.

4.4.1 Type I uses a sensor-reference pair of electrodes to detect changes in silver ion concentration and a generator anode-cathode pair of electrodes to maintain constant silver ion concentration and an inlet for a gaseous sample from the pyrolysis tube. The sensor, reference, and anode electrodes are silver electrodes. The cathode electrode is a platinum wire. The reference electrode resides in a saturated silver acetate half-cell. The electrolyte contains 70% acetic acid in water.

4.4.2 Type II uses a sensor-reference pair of electrodes to detect changes in silver ion concentration and a generator anode-cathode pair of electrodes to maintain constant silver ion concentration, an inlet for a gaseous sample that passes through a 95% sulfuric acid dehydrating tube from the pyrolysis tube, and a sealed two-piece titration cell with an exhaust tube to vent fumes to an external exhaust. All electrodes can be removed and replaced independently without reconstructing the cell assembly. The anode electrode is constructed of silver. The cathode electrode is constructed of platinum. The anode is separated from the

---

[1]Any apparatus that meets the performance criteria of this section may be used to conduct analyses by this methodology. Three commercial analyzers that fulfill the requirements for apparatus Steps 4.1 through 4.4 are: Dohrmann Models DX-20B and MCTS-20 and Mitsubishi Model TSX-10 available from Cosa Instrument.

cathode by a 10% KNO_3 agar bridge, and continuity is maintained through an aqueous 10% KNO_3 salt bridge. The sensor electrode is constructed of silver. The reference electrode is a silver/silver chloride ground glass sleeve, double-junction electrode with aqueous 1M KNO_3 in the outer chamber and aqueous 1M KCl in the inner chamber.

4.5 Sampling syringe, a microliter syringe of 10 μL capacity capable of accurately delivering 2 to 5 μL of a viscous sample into the sample boat.

4.6 Micropipet, a positive displacement micropipet capable of accurately delivering 2 to 5 μL of a viscous sample into the sample boat.

4.7 Analytical balance. When used to weigh a sample of 2 to 5 mg onto the boat, the balance shall be accurate to $\pm$ 0.01 mg. When used to determine the density of the sample, typically 8 g per 10 mL, the balance shall be accurate to $\pm$ 0.1 g.

4.8 Class A volumetric flasks: 100 mL.

5.0 REAGENTS

5.1 Purity of Reagents. Reagent-grade chemicals shall be used in all tests. Unless otherwise indicated, it is intended that all reagents shall conform to the specifications of the Committee on Analytical Reagents of the American Chemical Society, where such specifications are available. Other grades may be used, provided it is first ascertained that the reagent is of sufficiently high purity to permit its use without lessening the accuracy of the determination.

5.2 Reagent water. All references to water in this method refer to reagent water, as defined in Chapter One.

5.3 Acetic acid, CH_3CO_2H. Glacial.

5.4 Isooctane, $(CH_3)_2CHCH_2C(CH_3)_3$ (2,2,4-Trimethylpentane).

5.5 Chlorobenzene, C_6H_5Cl.

5.6 Chlorine, standard stock solution - 10,000 ng Cl/μL, weigh accurately 3.174 g of chlorobenzene into 100-mL Class A volumetric flask. Dilute to the mark with isooctane.

5.7 Chlorine, standard solution. 1,000 ng Cl/μL, pipet 10.0 mL of chlorine stock solution (Sec. 5.6) into a 100-mL volumetric flask and dilute to volume with isooctane.

5.8 Argon, helium, nitrogen, or carbon dioxide, high-purity grade (HP) used as the carrier gas. High-purity grade gas has a minimum purity of 99.995%.

5.9 Oxygen, high-purity grade (HP), used as the reactant gas.

5.10 Gas regulators. Two-stage regulator must be used on the reactant and carrier gas.

5.11 Cell Type 1.

5.11.1 Cell electrolyte solution. 70% acetic acid: combine 300 mL reagent water with 700 mL acetic acid (Sec. 5.3) and mix well.

5.11.2 Silver acetate, CH_3CO_2Ag. Powder purified for saturated reference electrode.

5.12 Cell Type 2.

5.12.1 Sodium acetate, CH_3CO_2Na.

5.12.2 Potassium nitrate, KNO_3.

5.12.3 Potassium chloride, KCl.

5.12.4 Sulfuric acid (concentrated), H_2SO_4.

5.12.5 Agar, (jelly strength 450 to 600 g/cm^2).

5.12.6 Cell electrolyte solution - 85% acetic acid: combine 150 mL reagent water with 1.35 g sodium acetate (Sec. 5.12.1) and mix well; add 850 mL acetic acid (Sec. 5.3) and mix well.

5.12.7 Dehydrating solution - Combine 95 mL sulfuric acid (Sec. 5.12.4) with 5 mL reagent water and mix well.

CAUTION: This is an exothermic reaction and may proceed with bumping unless controlled by the addition of sulfuric acid. Slowly add sulfuric acid to reagent water. Do not add water to sulfuric acid.

5.12.8 Potassium nitrate (10%), KNO_3. Add 10 g potassium nitrate (Sec. 5.12.2) to 100 mL reagent water and mix well.

5.12.9 Potassium nitrate (1M), KNO_3. Add 10.11 g potassium nitrate (Sec. 5.12.2) to 100 mL reagent water and mix well.

5.12.10 Potassium chloride (1M), KCl. Add 7.46 g potassium chloride (Sec. 5.12.3) to 100 mL reagent water and mix well.

5.12.11 Agar bridge solution - Mix 0.7 g agar (Sec. 5.12.5), 2.5g potassium nitrate (Sec. 5.12.2), and 25 mL reagent water and heat to boiling.

6.0 SAMPLE COLLECTION, PRESERVATION, AND HANDLING

6.1 All samples must be collected using a sampling plan that addresses the considerations discussed in Chapter Nine.

6.2 Because the collected sample will be analyzed for total halogens, it should be kept headspace free and refrigerated prior to preparation and analysis to minimize volatilization losses of organic halogens. Because waste oils may

contain toxic and/or carcinogenic substances, appropriate field and laboratory safety procedures should be followed.

6.3 Laboratory subsampling of the sample should be performed on a well-mixed sample of oil.

7.0 PROCEDURES

7.1 Preparation of apparatus.

7.1.1 Set up the analyzer as per the equipment manufacturer's instructions.

7.1.2 Typical operating conditions: Type 1.

Furnace temperature.....	1,000°C
Carrier gas flow.....	43 cm^3/min
Oxygen gas flow.....	160 cm^3/min
Coulometer	
Bias.....	250 mV
Gain.....	25%

7.1.3 Typical operating conditions: Type 2.

Furnace temperature.....	H-1 850°C
	H-2 1,000°C
Carrier gas flow.....	250 cm^3/min
Oxygen gas flow.....	250 cm^3/min
Coulometer	
End point potential (bias).....	300 mV
Gain G-1.....	1.5 coulombs/Δ mV
G-2.....	3.0 coulombs/Δ mV
G-3.....	3.0 coulombs/Δ mV
ES-1 (range 1).....	25 mV
ES-2 (range 2).....	30 mV

<u>NOTE</u>: Other conditions may be appropriate. Refer to the instrumentation manual.

7.2 Sample introduction.

7.2.1 Carefully fill a 10-μL syringe with 2 to 5 μL of sample depending on the expected concentration of total chlorine. Inject the sample through the septum onto the cool boat, being certain to touch the boat with the needle tip to displace the last droplet.

7.2.2 For viscous samples that cannot be drawn into the syringe barrel, a positive displacement micropipet may be used. Here, the 2-5 μL of sample is placed on the boat from the micropipet through the opened hatch port. The same technique as with the syringe is used to displace the last droplet into the boat. A tuft of quartz wool in the boat can aid in completely transferring the sample from the micropipet into the boat.

NOTE: Dilution of samples to reduce viscosity is not recommended due to uncertainty about the solubility of the sample and its chlorinated constituents. If a positive displacement micropipet is not available, dilution may be attempted to enable injection of viscous samples.

7.2.3 Alternatively, the sample boat may be removed from the instrument and tared on an analytical balance. A sample of 2-5 mg is accurately weighed directly into the boat and the boat and sample returned to the inlet of the instrument.

$$2\text{-}5\ \mu L = 2\text{-}5\ mg$$

NOTE: Sample dilution may be required to ensure that the titration system is not overloaded with chlorine. This will be somewhat system dependent and should be determined before analysis is attempted. For example, the MCTS-20 can titrate up to 10,000 ng chlorine in a single injection or weighed sample, while the DX-20B has an upper limit of 50,000 ng chlorine. For 2 to 5 μL sample sizes, these correspond to nominal concentrations in the sample of 800 to 2,000 μg/g and 4,000 to 10,000 μg/g, respectively. If the system is overloaded, especially with inorganic chloride, residual chloride may persist in the system and affect results of subsequent samples. In general, the analyst should ensure that the baseline returns to normal before running the next sample. To speed baseline recovery, the electrolyte can be drained from the cell and replaced with fresh electrolyte.

NOTE: To determine total chlorine, do not extract the sample either with reagent water or with an organic solvent such as toluene or isooctane. This may lower the inorganic chlorine content as well as result in losses of volatile solvents.

7.2.4 Follow the manufacturer's recommended procedure for moving the sample and boat into the combustion tube.

7.3 Calibration and standardization.

7.3.1 System recovery - The fraction of chlorine in a standard that is titrated should be verified every 4 hours by analyzing the standard solution (Sec. 5.7). System recovery is typically 85% or better. The pyrolysis tube should be replaced whenever system recovery drops below 75%.

NOTE: The 1,000 μg/g system recovery sample is suitable for all systems except the MCTS-20 for which a 100 μg/g sample should be used.

7.3.2 Repeat the measurement of this standard at least three times.

7.3.3 System blank - The blank should be checked daily with isooctane. It is typically less than 1 μg/g chlorine. The system blank should be subtracted from both samples and standards.

7.4 Calculations.

7.4.1 For systems that read directly in mass units of chloride, the following equations apply:

$$\text{Chlorine, } \mu\text{g/g (wt/wt)} = \frac{\text{Display}_S}{(V_S)\ (D_S)\ (RF)} - B \qquad (3)$$

or

$$\text{Chlorine, } \mu\text{g/g (wt/wt)} = \frac{\text{Display}_S}{(M)\ (RF)} - B \qquad (4)$$

where:

Display = Integrated value in nanograms (when the integrated values are displayed in micrograms, they must be multiplied by 10^3)
Display_B = blank measurement Display_S = sample measurement

V = Volume of sample injected in microliters
V_B = blank volume V_S = sample volume

D = Density of sample, grams per cubic centimeters
D_B = blank density D_S = sample density

RF = Recovery factor = ratio of chlorine determined in standard minus the system blank, divided by known standard content = $\frac{\text{Found - Blank}}{\text{Known}}$

B = System blank, μg/g chlorine = $\frac{\text{Display}_B}{(V_B)\ (D_B)}$

M = Mass of sample, mg

7.4.2 Other systems internally compensate for recovery factor, volume, density, or mass and blank, and thus read out directly in parts per million chlorine units. Refer to instrumentation manual.

8.0 QUALITY CONTROL

8.1 Refer to Chapter One for specific quality control procedures.

8.2 Each sample should be analyzed twice. If the results do not agree to within 10%, expressed as the relative percent difference of the results, repeat the analysis.

8.3 Analyze matrix spike and matrix spike duplicates - spike samples with a chlorinated organic at a level of total chlorine commensurate with the levels being determined. The spike recovery should be reported and should be between

80 and 120% of the expected value. Any sample suspected of containing >25% water should also be spiked with organic chlorine.

9.0 METHOD PERFORMANCE

9.1 These data are based on 66 data points obtained by 10 laboratories who each analyzed four used crankcase oils and three fuel oil blends with crankcase in duplicate. A data point represents one duplicate analysis of a sample. One laboratory and four additional data points were determined to be outliers and are not included in these results.

9.2 Precision. The precision of the method as determined by the statistical examination of interlaboratory test results is as follows:

Repeatability - The difference between successive results obtained by the same operator with the same apparatus under constant operating conditions on identical test material would exceed, in the long run, in the normal and correct operation of the test method the following values only in 1 case in 20 (see Table 1):

$$Repeatability = 0.137\ x*$$

*where x is the average of two results in μg/g.

Reproducibility - The difference between two single and independent results obtained by different operators working in different laboratories on identical test material would exceed, in the long run, the following values only in 1 case in 20:

$$Reproducibility = 0.455\ x*$$

*where x is the average value of two results in μg/g.

9.3 Bias. The bias of this test method varies with concentration, as shown in Table 2:

Bias = Amount found - Amount expected

10.0 REFERENCE

1. Gaskill, A.; Estes, E.D.; Hardison, D.L.; and Myers, L.E. "Validation of Methods for Determining Chlorine in Used Oils and Oil Fuels." Prepared for U.S. Environmental Protection Agency, Office of Solid Waste. EPA Contract No. 68-01-7075, WA80. July 1988.

2. Rohrobough, W.G.; et al. Reagent Chemicals, American Chemical Society Specifications, 7th ed.; American Chemical Society: Washington, DC, 1986.

3. Standard Instrumentation, 3322 Pennsylvania Avenue, Charleston, WV 25302.

TABLE 1.
REPEATABILITY AND REPRODUCIBILITY FOR CHLORINE IN USED OILS BY MICROCOULOMETRIC TITRATION

Average value µg/g	Repeatability, µg/g	Reproducibility, µg/g
500	69	228
1,000	137	455
1,500	206	683
2,000	274	910
2,500	343	1,138
3,000	411	1,365

TABLE 2.
RECOVERY AND BIAS DATA FOR CHLORINE IN USED OILS BY MICROCOULOMETRIC TITRATION

Amount expected, µg/g	Amount found µg/g	Bias, µg/g	Percent bias
320	312	-8	-3
480	443	-37	-8
920	841	-79	-9
1,498	1,483	-15	-1
1,527	1,446	-81	-5
3,029	3,016	-13	0
3,045	2,916	-129	-4

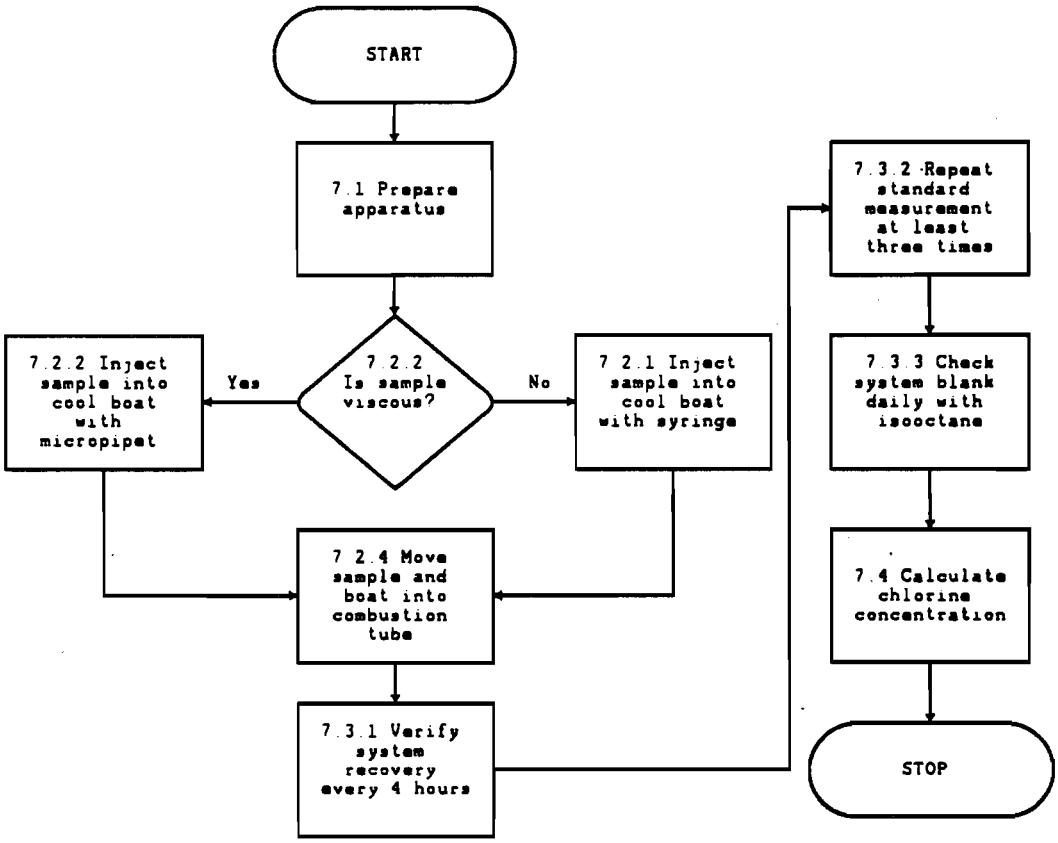
START
7.1 Prepare apparatus
7.2.2 Is sample viscous?
Yes
No
7.2.2 Inject sample into cool boat with micropipet
7.2.1 Inject sample into cool boat with syringe
7.2.4 Move sample and boat into combustion tube
7.3.1 Verify system recovery every 4 hours
7.3.2 Repeat standard measurement at least three times
7.3.3 Check system blank daily with isooctane
7.4 Calculate chlorine concentration
STOP

METHOD 9077

TEST METHODS FOR TOTAL CHLORINE IN NEW AND USED PETROLEUM PRODUCTS (FIELD TEST KIT METHODS)

1.0 SCOPE AND APPLICATION

1.1 The method may be used to determine if a new or used petroleum product meets or exceeds requirements for total halogen measured as chloride. An analysis of the chlorine content of petroleum products is often required prior to their use as a fuel. The method is specifically designed for used oils permitting onsite testing at remote locations by nontechnical personnel to avoid the delays for laboratory testing.

1.2 In these field test methods, the entire analytical sequence, including sampling, sample pretreatment, chemical reactions, extraction, and quantification, are combined in a single kit using predispensed and encapsulated reagents. The overall objective is to provide a simple, easy to use procedure, permitting nontechnical personnel to perform a test with analytical accuracy outside of a laboratory environment in under 10 minutes. One of the kits is preset at 1,000 μg/g total chlorine to meet regulatory requirements for used oils. The other kits provide quantitative results over a range of 750 to 7,000 μg/g and 300 to 4,000 μg/g.

2.0 SUMMARY OF METHOD

2.1 The oil sample (around 0.4 g by volume) is dispersed in a solvent and reacted with a mixture of metallic sodium catalyzed with naphthalene and diglyme at ambient temperature. This process converts all organic halogens to their respective sodium halides. All halides in the treated mixture, including those present prior to the reaction, are then extracted into an aqueous buffer, which is then titrated with mercuric nitrate using diphenyl carbazone as the indicator. The end point of the titration is the formation of the blue-violet mercury diphenylcarbazone complex. Bromide and iodide are titrated and reported as chloride.

2.2 Reagent quantities are preset in the fixed end point kit (Method A) so that the color of the solution at the end of the titration indicates whether the sample is above 1,000 μg/g chlorine (yellow) or below 1,000 μg/g chlorine (blue).

2.3 The first quantitative kit (Method B) involves a reverse titration of a fixed volume of mercuric nitrate with the extracted sample such that the end point is denoted by a change from blue to yellow in the titration vessel over the range of the kit (750 to 7,000 μg/g). The final calculation is based on the assumption that the oil has a specific gravity of 0.9 g/cm^3.

2.4 The second quantitative kit (Method C) involves a titration of the extracted sample with mercuric nitrate by means of a 1-mL microburette such that the end point is denoted by a change from pale yellow to red-violet over the range of the kit (300 to 4,000 μg/g). The concentration of chlorine in the original oil is then read from a scale on the microburette.

NOTE: Warning--All reagents are encapsulated or contained within ampoules. Strict adherence to the operational procedures included with the kits as well as accepted safety procedures (safety glasses and gloves) should be observed.

NOTE: Warning--When crushing the glass ampoules, press firmly in the center of the ampoule once. Never attempt to recrush broken glass because the glass may come through the plastic and cut fingers.

NOTE: Warning--In case of accidental breakage onto skin or clothing, wash with large amounts of water. All the ampoules are poisonous and should not be taken internally.

NOTE: Warning--The gray ampoules contain metallic sodium. Metallic sodium is a flammable water-reactive solid.

NOTE: Warning--Do not ship kits on passenger aircraft. Dispose of used kits properly.

NOTE: Caution--When the sodium ampoule in either kit is crushed, oils that contain more than 25% water will cause the sample to turn clear to light gray. Under these circumstances, the results may be biased excessively low and should be disregarded.

3.0 INTERFERENCES

3.1 Free water, as a second phase, should be removed. However, this second phase can be analyzed separately for chloride content if desired.

METHOD A

FIXED END POINT TEST KIT METHOD

4.0A APPARATUS AND MATERIALS

4.1A The CLOR-D-TECT 1000[1] is a complete self-contained kit. It includes: a sampling tube to withdraw a fixed sample volume for analysis; a polyethylene test tube #1 into which the sample is introduced for dilution and reaction with metallic sodium; and a polyethylene tube #2 containing a buffered aqueous extractant, the mercuric nitrate titrant, and diphenyl carbazone indicator. Included are instructions to conduct the test and a color chart to aid in determining the end point.

5.0A REAGENTS

5.1A Purity of reagents. Reagent-grade chemicals shall be used in all tests. Unless otherwise indicated, it is intended that all reagents shall conform to the specifications of the Committee on Analytical Reagents of the American Chemical Society, where such specifications are available. Other grades may be used, provided it is first ascertained that the reagent is of sufficiently high purity to permit its use without lessening the accuracy of the determination.

5.2A All necessary reagents are contained within the kit.

5.3A The kit should be examined upon opening to see that all of the components are present and that all the ampoules (4) are in place and not leaking. The liquid in Tube #2 (yellow cap) should be approximately 1/2 in. above the 5-mL line and the tube should not be leaking. The ampoules are not supposed to be completely full.

6.0A SAMPLE COLLECTION, PRESERVATION, AND HANDLING

6.1A All samples must be collected using a sampling plan that addresses the considerations discussed in Chapter Nine.

6.2A Because the collected sample will be analyzed for total halogens, it should be kept headspace free and refrigerated prior to preparation and analysis to minimize volatilization losses of organic halogens. Because waste oils may contain toxic and/or carcinogenic substances, appropriate field and laboratory safety procedures should be followed.

7.0A PROCEDURE

7.1A Preparation. Open analysis carton, remove contents, mount plastic test tubes in the provided holder. Remove syringe and glass sampling capillary from foil pouch.

---

[1]Available from Dexsil Corporation, One Hamden Park Drive, Hamden, CT 06517.

NOTE: Perform the test in a warm, dry area with adequate light. In cold weather, a truck cab is sufficient. If a warm area is not available, Step 7.3A should be performed while warming Tube #1 in palm of hand.

7.2A Sample introduction. Remove white cap from Tube #1. Using the plastic syringe, slowly draw the oil up the capillary tube until it reaches the flexible adapter tube. Wipe excess oil from the tube with the provided tissue, keeping capillary vertical. Position capillary tube into Tube #1, and detach adapter tubing, allowing capillary to drop to the bottom of the tube. Replace white cap on tube. Crush the capillary by squeezing the test tube several times, being careful not to break the glass reagent ampoules.

7.3A Reaction. Break the lower (colorless) capsule containing the clear diluent solvent by squeezing the sides of the test tube. Mix thoroughly by shaking the tube vigorously for 30 seconds. Crush the upper grey ampoule containing metallic sodium, again by squeezing the sides of the test tube. Shake vigorously for 20 seconds. Allow reaction to proceed for 60 seconds, shaking intermittently several times while timing with a watch.

NOTE: Caution--Always crush the clear ampoule in each tube first. Otherwise, stop the test and start over using another complete kit. False (low) results may occur and allow a contaminated sample to pass without detection if clear ampoule is not crushed first.

7.4A Extraction. Remove caps from both tubes. Pour the clear buffered extraction solution from Tube #2 into Tube #1. Replace the white cap on Tube #1, and shake vigorously for 10 seconds. Vent tube by partially unscrewing the dispenser cap. Close cap securely, and shake for an additional 10 seconds. Vent again, tighten cap, and stand tube upside down on white cap. Allow phases to separate for 2 minutes.

7.5A Analysis. Put filtration funnel into Tube #2. Position Tube #1 over funnel and open nozzle on dispenser cap. Squeeze the sides of Tube #1 to dispense the clear aqueous lower phase through the filter into Tube #2 to the 5 mL line on Tube #2. Remove the filter funnel. Replace the yellow cap on Tube #2 and close the nozzle on the dispenser cap. Break the colorless lower capsule containing mercuric nitrate solution by squeezing the sides of the tube, and shake for 10 seconds. Then break the upper colored ampoule containing the diphenylcarbazone indicator, and shake for 10 seconds. Observe color immediately.

7.6A Interpretation of results

7.6.1A Because all reagent levels are preset, calculations are not required. A blue solution in Tube #2 indicates a chlorine content in the original oil of less than 1,000 μg/g, and a yellow color indicates that the chlorine concentration is greater than 1,000 μg/g. Refer to the color chart enclosed with the kit in interpreting the titration end point.

7.6.2A Report the results as < or > 1,000 μg/g chlorine in the oil sample.

8.0A QUALITY CONTROL

8.1A Refer to Chapter One for specific quality control procedures.

8.2A Each sample should be tested two times. If the results do not agree, then a third test must be performed. Report the results of the two that agree.

9.0A METHOD PERFORMANCE

9.1A No formal statement is made about either the precision or bias of the overall test kit method for determining chlorine in used oil because the result merely states whether there is conformance to the criteria for success specified in the procedure, (i.e., a blue or yellow color in the final solution). In a collaborative study, eight laboratories analyzed four used crankcase oils and three fuel oil blends with crankcase in duplicate using the test kit. Of the resulting 56 data points, 3 resulted in incorrect classification of the oil's chlorine content (Table 1). A data point represents one duplicate analysis of a sample. There were no disagreements within a laboratory on any duplicate determinations.

TABLE 1.
PRECISION AND BIAS INFORMATION FOR METHOD A-
FIXED END POINT TEST KIT METHOD

Expected concentration, µg/g	Expected results, µg/g	Percent correct[a]	Percent agreement[b]	
			Within	Between
320	< 1,000	100	100	100
480	< 1,000	100	100	100
920	< 1,000	100	100	100
1,498	> 1,000	87	100	87
1,527	> 1,000	75	100	75
3,029	> 1,000	100	100	100
3,045	> 1,000	100	100	100

[a]Percent correct--percent correctly identified as above or below 1,000 µg/g.

[b]Percent agreement--percent agreement within or between laboratories.

METHOD 9077, METHOD A
FIXED END POINT TEST KIT METHOD

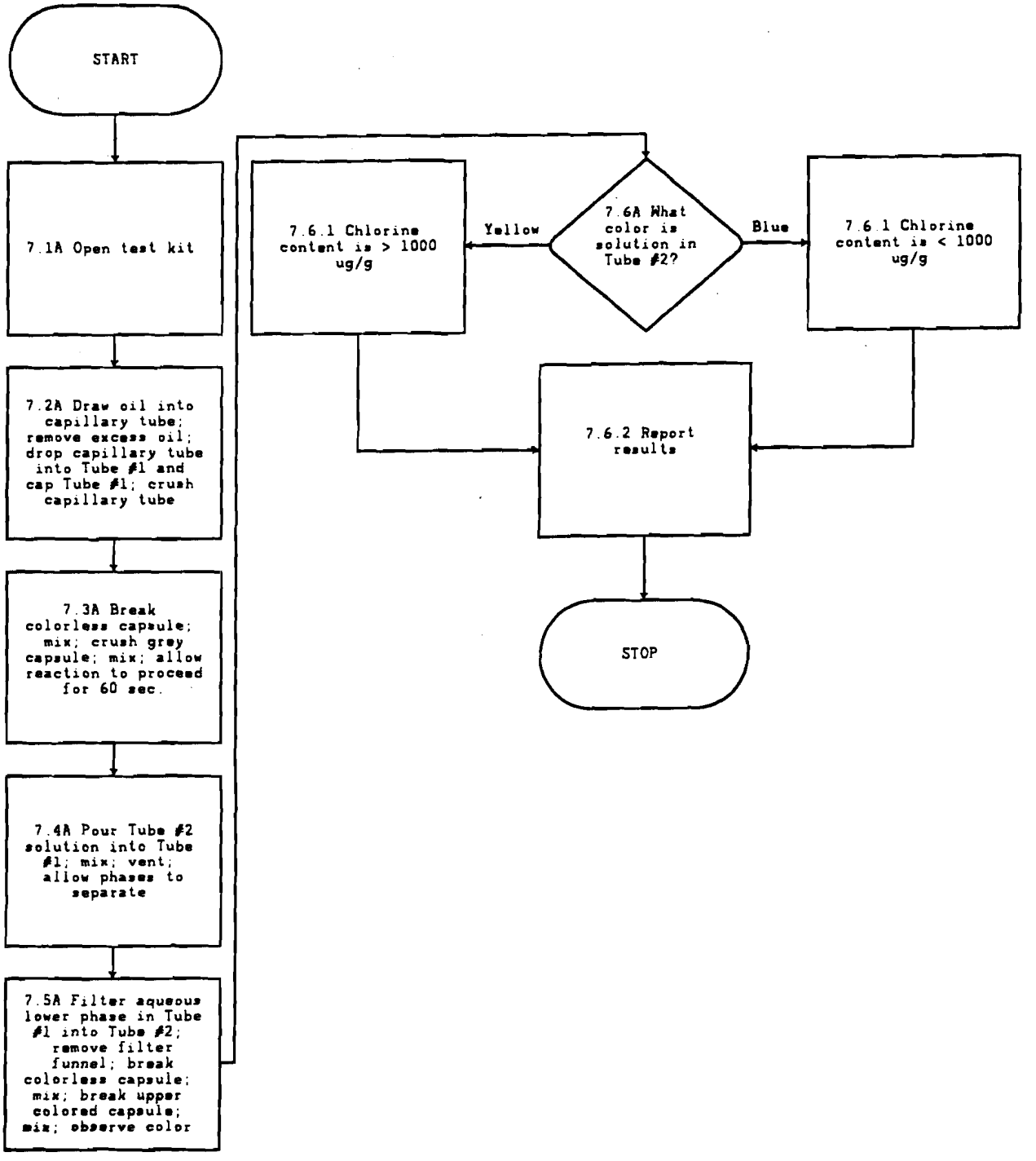

METHOD B

REVERSE TITRATION QUANTITATIVE END POINT TEST KIT METHOD

4.0B APPARATUS AND MATERIALS

4.1B QuantiClor[2] kit components (see Figure 1).

4.1.1B Plastic reaction bottle: 1 oz, with flip-top dropper cap and a crushable glass ampoule containing sodium.

4.1.2B Plastic buffer bottle: contains 9.5 mL of aqueous buffer solution.

4.1.3B Titration vial: contains buffer bottle and indicator-impregnated paper.

4.1.4B Glass vial: contains 2.0 mL of solvents.

4.1.5B Micropipet and plunger, 0.25 mL.

4.1.6B Activated carbon filtering column.

4.1.7B Titret and valve assembly.

4.2B The reagents needed for the test are packaged in disposable containers.

4.3B The procedure utilizes a Titret. Titrets® are hand-held, disposable cells for titrimetric analysis. A Titret is an evacuated glass ampoule (13 mm diameter) that contains an exact amount of a standardized liquid titrant. A flexible valve assembly is attached to the tip of the ampoule. Titrets® employ the principle of reverse titration; that is, small doses of sample are added to the titrant to the appearance of the end point color. The color change indicates that the equivalency point has been reached. The flow of the sample into the Titret may be controlled by using an accessory called a Titrettor™ .

5.0B REAGENTS

5.1B The crushable glass ampoule, which is inside the reaction bottle, contains 85 mg of metallic sodium in a light oil dispersion.

5.2B The buffer bottle contains 0.44 g of $NaH_2PO_4 \cdot 2H_2O$ and 0.32 mL of HNO_3 in distilled water.

5.3B The glass vial contains 770 mg Stoddard Solvent (CAS No. 8052-41-3), 260 mg toluene, 260 mg butyl ether, 260 mg diglyme, 130 mg naphthalene, and 70 mg demulsifier.

---

[2]Quanti-Chlor Kit, Titrets®, and Titrettor™ are manufactured by Chemetrics, Inc., Calverton, VA 22016. U.S. Patent No. 4,332,769.

5.4B The Titret contains 1.12 mg mercuric nitrate in distilled water.

5.5B The indicator-impregnated paper contains approximately 0.3 mg of diphenylcarbazone and 0.2 mg of brilliant yellow.

6.0B SAMPLE COLLECTION, PRESERVATION, AND HANDLING

See Section 6.0A of Method A.

7.0B PROCEDURE

7.1B Shake the glass vial and pour its contents into the reaction bottle.

7.2B Fill the micropipet with a well-shaken oil sample by pulling the plunger until its top edge is even with the top edge of the micropipet. Wipe off the excess oil and transfer the sample into the reaction bottle (see Figure 2.1).

7.3B Gently squeeze most of the air out of the reaction bottle (see Figure 2.2). Cap the bottle securely, and shake vigorously for 30 seconds.

7.4B Crush the sodium ampoule by pressing against the outside wall of the reaction bottle (see Figure 2.3).

> CAUTION: Samples containing a high percentage of water will generate heat and gas, causing the reaction bottle walls to expand. To release the gas, briefly loosen the cap.

7.5B Shake the reaction bottle vigorously for 30 seconds.

7.6B Wait 1 minute. Shake the reaction bottle occasionally during this time.

7.7B Remove the buffer bottle from the titration vial, and slowly pour its contents into the reaction bottle (see Figure 2.4).

7.8B Cap the reaction bottle and shake gently for a few seconds. As soon as the foam subsides, release the gas by loosening the cap. Tighten the cap, and shake vigorously for 30 seconds. As before, release any gas that has formed, then turn the reaction bottle upside down (see Figure 2.5).

7.9B Wait 1 minute.

7.10B While holding the filtering column in a vertical position, remove the plug. Gently tap the column to settle the carbon particles.

7.11B Keeping the reaction bottle upside down, insert the flip top into the end of the filtering column and position the column over the titration vial (see Figure 2.6). Slowly squeeze the lower aqueous layer out of the reaction bottle and into the filtering column. Keep squeezing until the first drop of oil is squeezed out.

NOTE: Caution--The aqueous layer should flow through the filtering column into the titration vial in about 1 minute. In rare cases, it may be necessary to gently tap the column to begin the flow. The indicator paper should remain in the titration vial.

7.12B Cap the titration vial and shake it vigorously for 10 seconds.

7.13B Slide the flexible end of the valve assembly over the tapered tip of the Titret so that it fits snugly (see Figure 3.1).

7.14B Lift (see Figure 3.2) the control bar and insert the assembled Titret into the Titrettor™ .

7.15B Hold the Titrettor™ with the sample pipe in the sample, and press the control bar to snap the pre-scored tip of the Titret (see Figure 3.3).

NOTE: Caution--Because the Titret is sealed under vacuum, the fluid inside may be agitated when the tip snaps.

7.16B With the tip of the sample pipe in the sample, briefly press the control bar to pull in a SMALL amount of sample (see Figure 3.3). The contents of the Titret will turn purple.

CAUTION: During the titration, there will be some undissolved powder inside the Titret. This does not interfere with the accuracy of the test.

7.17B Wait 30 seconds.

7.18B Gently press the control bar again to allow another SMALL amount of the sample to be drawn into the Titret.

CAUTION: Do not press the control bar unless the sample pipe is immersed in the sample. This prevents air from being drawn into the Titret.

7.19B After each addition, rock the entire assembly to mix the contents of the Titret. Watch for a color change from purple to very pale yellow.

7.20B Repeat Steps 7.18B and 7.19B until the color change occurs.

CAUTION: The end point color change (from purple to pale yellow) actually goes through an intermediate gray color. During this intermediate stage, extra caution should be taken to bring in SMALL amounts of sample and to mix the Titret contents well.

7.21B When the color of the liquid in the Titret changes to PALE YELLOW, remove the Titret from the Titrettor™ . Hold the Titret in a vertical position and carefully read the test result on the scale opposite the liquid level.

7.22B Calculation

7.22.1B To obtain results in micrograms per gram total chlorine, multiply scale units on the Titret by 1.3 and then subtract 200.

8.0B QUALITY CONTROL

8.1B Refer to Chapter One for specific quality control procedures.

8.2B Each sample should be tested two times. If the results do not agree to within 10%, expressed as the relative percent difference of the results, a third test must be performed. Report the results of the two that agree.

9.0B METHOD PERFORMANCE

9.1B These data are based on 49 data points obtained by seven laboratories who each analyzed four used crankcase oils and three fuel oil blends with crankcase in duplicate. A data point represents one duplicate analysis of a sample. There were no outlier data points or laboratories.

9.2B Precision. The precision of the method as determined by the statistical examination of interlaboratory test results is as follows:

Repeatability - The difference between successive results obtained by the same operator with the same apparatus under constant operating conditions on identical test material would exceed, in the long run, in the normal and correct operation of the test method, the following values only in 1 case in 20 (see Table 2):

$$Repeatability = 0.31\ x*$$

*where x is the average of two results in μg/g.

Reproducibility - The difference between two single and independent results obtained by different operators working in different laboratories on identical test material would exceed, in the long run, the following values only in 1 case in 20:

$$Reproducibility = 0.60\ x*$$

*where x is the average value of two results in μg/g.

9.3B Bias. The bias of this test method varies with concentration, as shown in Table 3:

Bias = Amount found - Amount expected

TABLE 2.
REPEATABILITY AND REPRODUCIBILITY FOR CHLORINE IN USED OILS BY THE QUANTITATIVE END POINT TEST KIT METHOD

Average value, µg/g	Repeatability, µg/g	Reproducibility, µg/g
1,000	310	600
1,500	465	900
2,000	620	1,200
2,500	775	1,500
3,000	930	1,800

TABLE 3.
RECOVERY AND BIAS DATA FOR CHLORINE IN USED OILS BY THE QUANTITATIVE END POINT TEST KIT METHOD

Amount expected, µg/g	Amount found, µg/g	Bias, µg/g	Percent bias
320 (< 750)[a]	776	+16	+3
480 (< 750)[a]	782	+32	+4
920	1,020	+100	+11
1,498	1,129	-369	-25
1,527	1,434	-93	-6
3,029	1,853	-1,176	-39
3,045	2,380	-665	-22

[a] The lower limit of the kit is 750 µg/g.

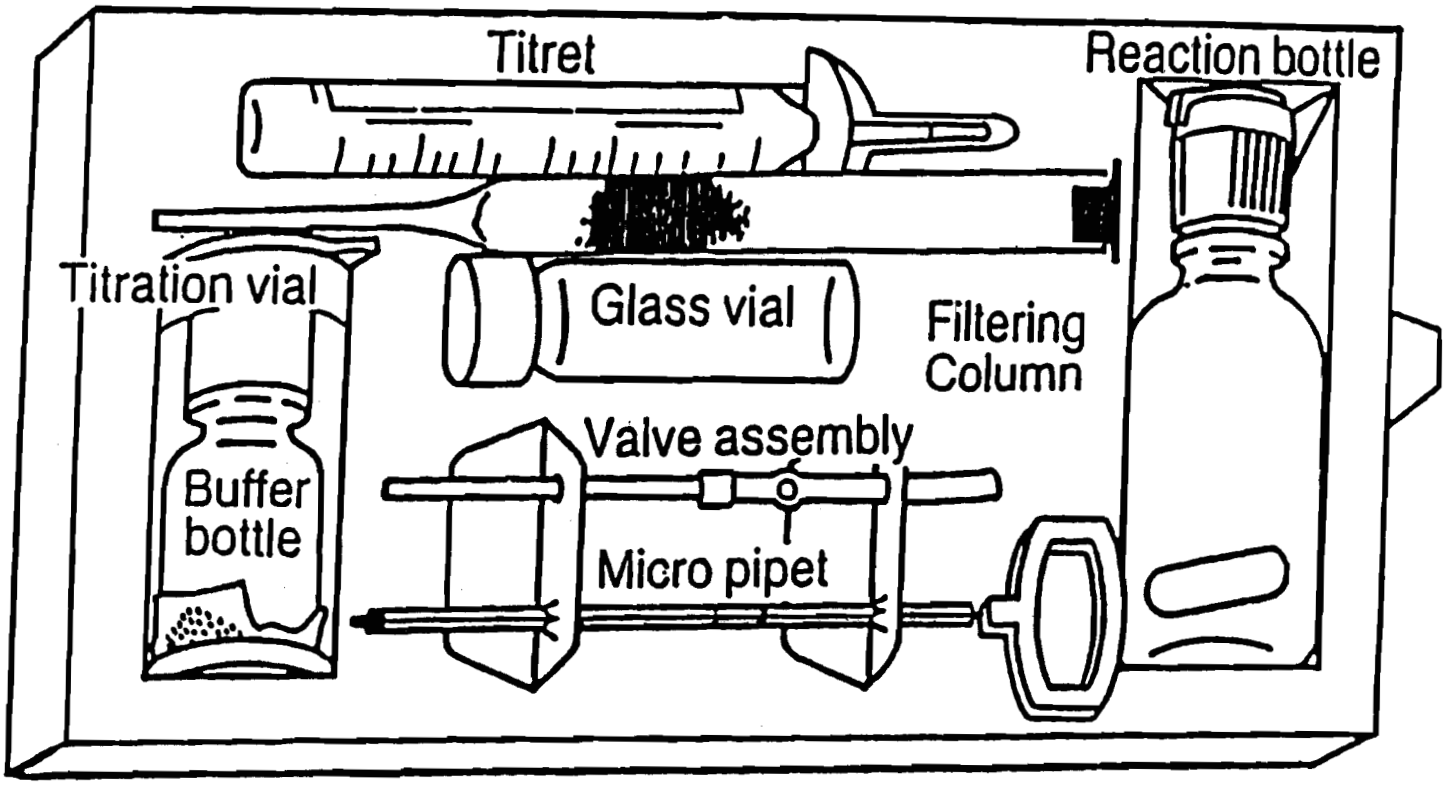

Figure 1. Components of CHEMetrics Total Chlorine in Waste Oil Test Kit (Cat. No. K2610).

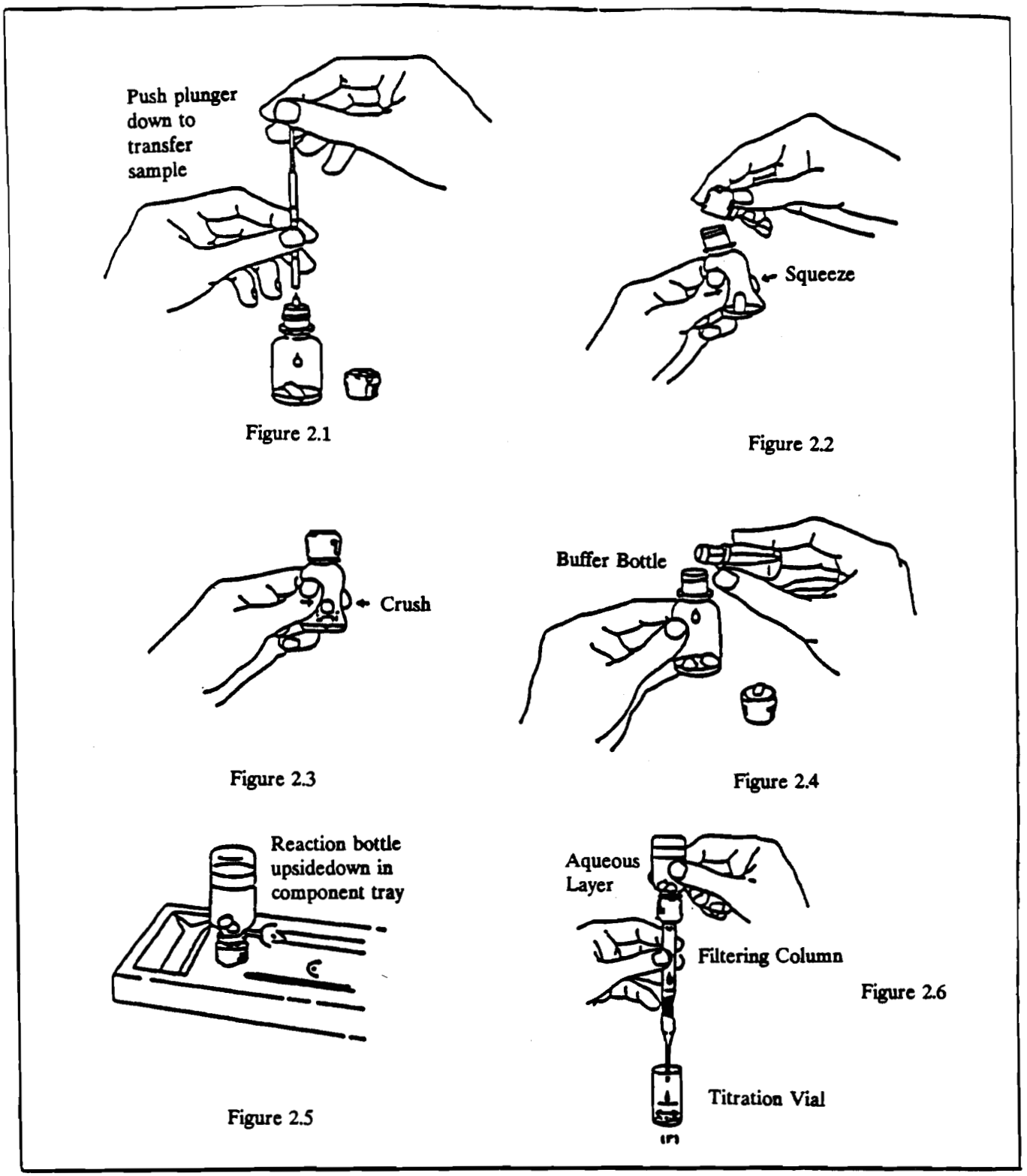

Figure 2. Reaction-Extraction Procedure.

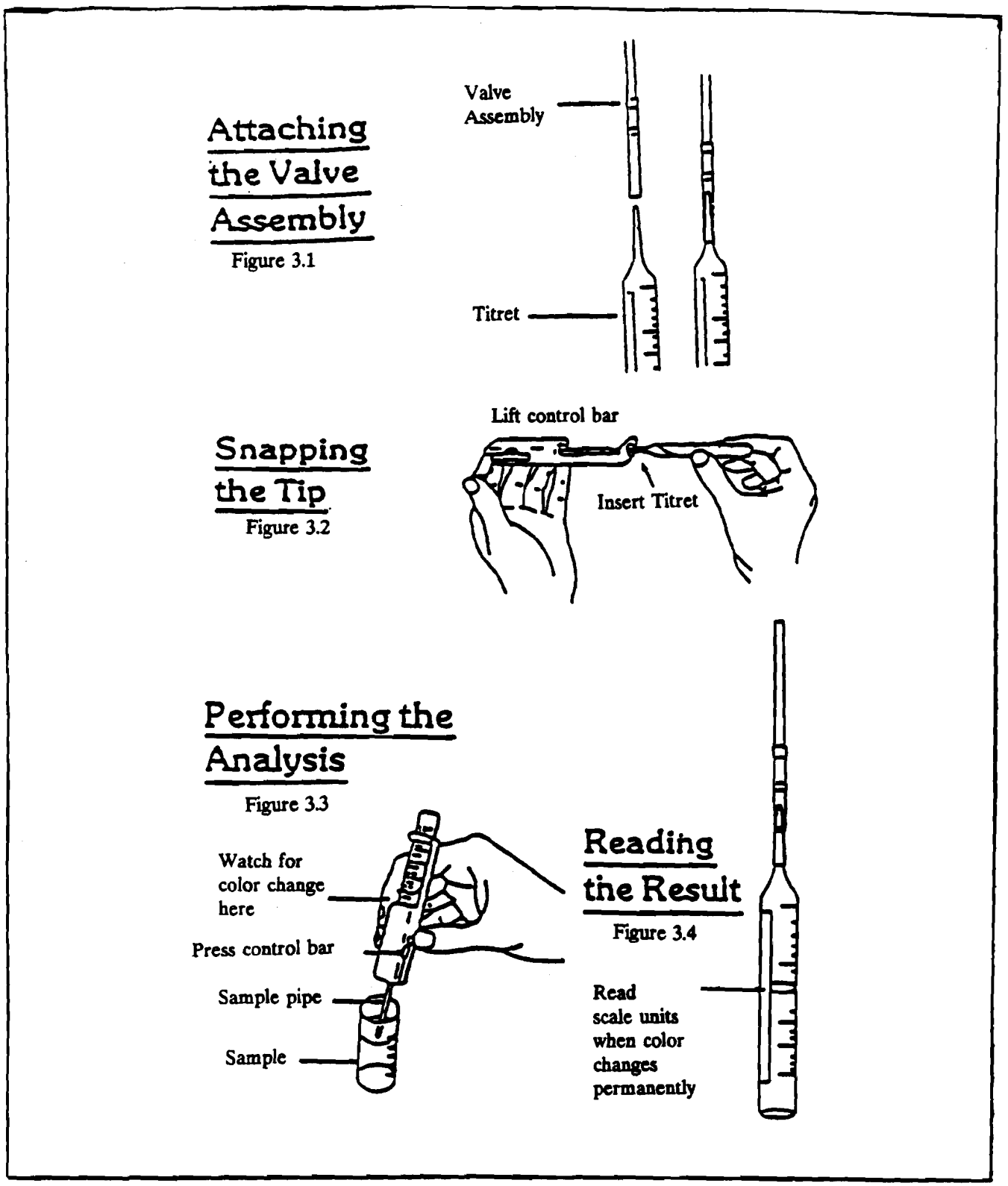

Figure 3. Titration Procedure

METHOD 9077, METHOD B
REVERSE TITRATION QUANTITATIVE END POINT TEST KIT METHOD

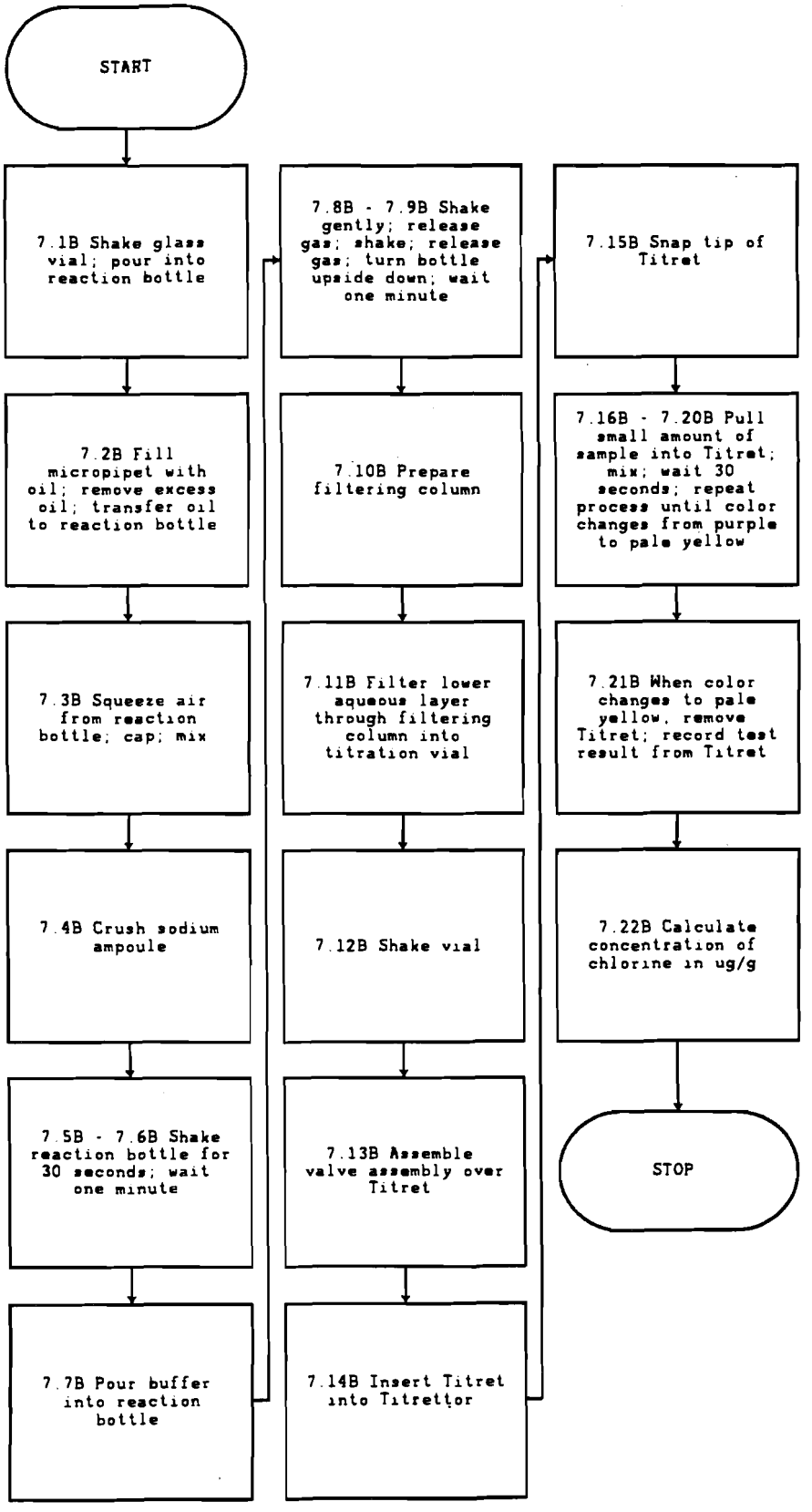

METHOD C

DIRECT TITRATION QUANTITAVE END POINT TEST KIT METHOD

4.0C APPARATUS AND MATERIALS

4.1C The CHLOR-D-TECT Q4000[3] is a complete self-contained kit. It includes: a sampling syringe to withdraw a fixed sample volume for analysis; a polyethylene test tube #1 into which the sample is introduced for dilution and reaction with metallic sodium; a polyethylene tube #2 containing a buffered aqueous extractant and the diphenylcarbazone indicator; a microburette containing the mercuric nitrate titrant; and a plastic filtration funnel. Also included are instructions to conduct the test.

5.0C REAGENTS

5.1C All necessary reagents are contained within the kit. The diluent solvent containing the catalyst, the metallic sodium, and the diphenylcarbazone are separately glass-encapsulated in the precise quantity required for analysis. A predispensed volume of buffer is contained in the second polyethylene tube. Mercuric nitrate titrant is also supplied in a sealed titration burette.

5.2C The kit should be examined upon opening to see that all of the components are present and that all ampoules (3) are in place and not leaking. The liquid in Tube #2 (clear cap) should be approximately 1/2 in. above the 5-mL line and the tube should not be leaking. The ampoules are not supposed to be completely full.

6.0C SAMPLE COLLECTION, PRESERVATION, AND HANDLING

6.1C See Section 6.0A of Method A.

7.0C PROCEDURE

7.1C Preparation. Open analysis carton, remove contents, mount plastic test tubes in the provided holder.

> NOTE: Perform the test in a warm, dry area with adequate light. In cold weather, a truck cab is sufficient. If a warm area is not available, Step 7.3C should be performed while warming Tube #1 in palm of hand.

7.2C Sample introduction. Unscrew the white dispenser cap from Tube #1. Slide the plunger in the empty syringe a few times to make certain that it slides easily. Place the top of the syringe in the oil sample to be tested, and pull back on the plunger until it reaches the stop and cannot be pulled further. Remove the syringe from the sample container, and wipe any excess oil from the outside of the syringe with the enclosed tissue. Place the tip of the syringe in Tube #1, and dispense the oil sample by depressing the plunger. Replace the white cap on the tube.

---

[3]Available from Dexsil Corporation, One Hamden Park Drive, Hamden, CT 06517.

7.3C Reaction. Break the lower (colorless) capsule containing the clear diluent solvent by squeezing the sides of the test tube. Mix thoroughly by shaking the tube vigorously for 30 seconds. Crush the upper grey ampoule containing metallic sodium, again by squeezing the sides of the test tube. Shake vigorously for 20 seconds. Allow reaction to proceed for 60 seconds, shaking intermittently several times while timing with a watch.

> CAUTION: Always crush the clear ampoule in each tube first. Otherwise, stop the test and start over using another complete kit. False (low) results may occur and allow a contaminated sample to pass without detection if clear ampoule is not crushed first.

7.4C Extraction. Remove caps from both tubes. Pour the clear buffered extraction solution from Tube #2 into Tube #1. Replace the white cap on Tube #1, and shake vigorously for 10 seconds. Vent tube by partially unscrewing the dispenser cap. Close cap securely, and shake for an additional 10 seconds. Vent again, tighten cap, and stand tube upside down on white cap. Allow phases to separate for 2 minutes.

> NOTE: Tip Tube #2 to an angle of only about 45°. This will prevent the holder from sliding out.

7.5C Analysis. Put filtration funnel into Tube #2. Position Tube #1 over funnel and open nozzle on dispenser cap. Squeeze the sides of Tube #1 to dispense the clear aqueous lower phase through the filter into Tube #2 to the 5-mL line on Tube #2. Remove the filter funnel, and close the nozzle on the dispenser cap. Place the plunger rod in the titration burette and press until it clicks into place. Break off (do not pull off) the tip on the titration burette. Insert the burette into Tube #2, and tighten the cap. Break the colored ampoule, and shake gently for 10 seconds. Dispense titrant dropwise by pushing down on burette rod in small increments. Shake the tube gently to mix titrant with solution in Tube #2 after each increment. Continue adding titrant until solution turns from yellow to red-violet. An intermediate pink color may develop in the solution, but should be disregarded. Continue titrating until a true red-violet color is realized. The chlorine concentration of the original oil sample is read directly off the titrating burette at the tip of the black plunger. Record this result immediatley as the red-violet color will fade with time.

8.0C QUALITY CONTROL

8.1C Refer to Chapter One for specific quality control procedures.

8.2C Each sample should be tested two times. If the results do not agree to within 10%, expressed as the relative percent difference of the results, a third test must be performed. Report the results of the two that agree.

9.0C METHOD PERFORMANCE

9.1C These data are based on 96 data points obtained by 12 laboratories who each analyzed six used crankcase oils and two fuel oil blends with crankcase in duplicate. A data point represents one duplicate analysis of a sample.

9.2C Precision. The precision of the method as determined by the statistical examination of interlaboratory test results is as follows:

Repeatability - The difference between successive results obtained by the same operator with the same apparatus under constant operating conditions on identical test material would exceed, in the long run, in the normal and correct operation of the test method, the following values only in 1 case in 20 (see Table 4):

$$Repeatability = 0.175\ x*$$

*where x is the average of two results in μg/g.

Reproducibility - The difference between two single and independent results obtained by different operators working in different laboratories on identical test material would exceed, in the long run, the following values only in 1 case in 20:

$$Reproducibility = 0.331\ x*$$

*where x is the average value of two results in μg/g.

9.3C Bias. The bias of this test method varies with concentration, as shown in Table 5:

Bias = Amount found - Amount expected

10.0 REFERENCE

1. Gaskill, A.; Estes, E.D.; Hardison, D.L.; and Myers, L.E. Validation of Methods for Determining Chlorine in Used Oils and Oil Fuels. Prepared for U.S. Environmental Protection Agency, Office of Solid Waste. EPA Contract No. 68-01-7075, wA 80. July 1988.

TABLE 4.
REPEATABILITY AND REPRODUCIBILITY FOR CHLORINE IN USED OILS BY THE QUANTITATIVE END POINT TEST KIT METHOD

Average value, µg/g	Repeatability, µg/g	Reproducibility, µg/g
500	88	166
1,000	175	331
1,500	263	497
2,000	350	662
2,500	438	828
3,000	525	993
4,000	700	1,324

TABLE 5.
RECOVERY AND BIAS DATA FOR CHLORINE IN USED OILS BY THE QUANTITATIVE END POINT TEST KIT METHOD

Amount expected, µg/g	Amount found, µg/g	Bias, µg/g	Percent bias
664	695	31	+5
964	906	-58	-6
1,230	1,116	-114	-9
1,445	1,255	-190	-13
2,014	1,618	-396	-20
2,913	2,119	-794	-27
3,812	2,776	-1,036	-27
4,190	3,211	-979	-23

METHOD 9077, METHOD C
DIRECT TITRATION QUANTITAVE END POINT TEST KIT METHOD

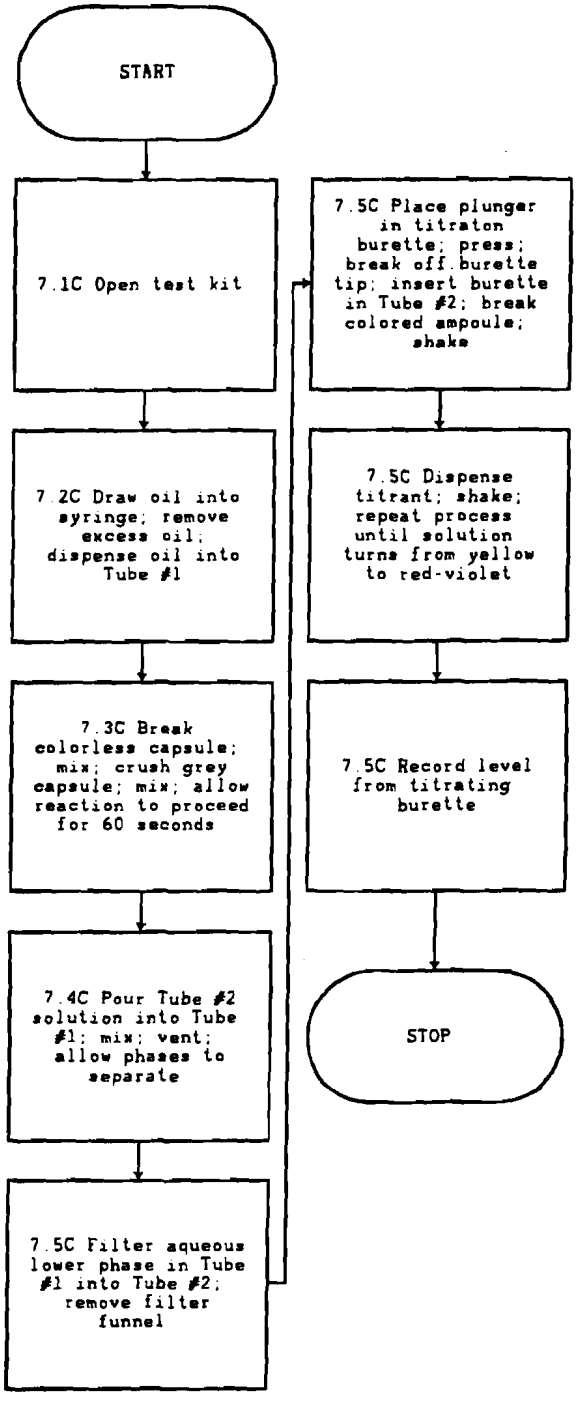

METHOD 9131

TOTAL COLIFORM: MULTIPLE TUBE FERMENTATION TECHNIQUE

1.0 SCOPE AND APPLICATION

1.1 This method is used to determine the presence of a member of the coliform group in ground water and surface water.

1.2 The coliform group, as analyzed for in this procedure, is defined as all aerobic and facultative anaerobic, gram-negative, non-spore-forming, rod-shaped bacteria that ferment lactose with gas formation within 48 hr at 35°C.

2.0 SUMMARY OF METHOD

2.1 The multiple-tube fermentation technique is a three-stage procedure in which the results are statistically expressed in terms of the Most Probable Number (MPN). These stages -- the presumptive stage, confirmed stage, and completed test -- are briefly summarized below. (For the analysis to be accurate, a five-tube test is required.)

2.1.1 **Presumptive Stage:** A series of lauryl tryptose broth primary fermentation tubes are inoculated with graduated quantities of the sample to be tested. The inoculated tubes are incubated at 35 ± 0.5°C for 24 ± 2 hr, at which time the tubes are examined for gas formation. For the tubes in which no gas is formed, continue incubation and examine for gas formation at the end of 48 ± 3 hr. Formation of gas in any amount within 48 ± 3 hr is a positive presumptive test.

2.1.2 **Confirmed Stage:** The confirmed stage is used on all primary fermentation tubes showing gas formation during the 24-hr and 48-hr periods. Fermentation tubes containing brilliant green lactose bile broth are inoculated with medium from the tubes showing a positive result in the presumptive test. Inoculation should be performed as soon as possible after gas formation occurs. The inoculated tubes are incubated for 48 ± 3 hr at 35 ± 0.5°C. Formation of gas at any time in the tube indicates a positive confirmed test.

2.1.3 **Completed Test:** The completed test is performed on all samples showing a positive result in the confirmed test. It can also be used as a quality control measure on 20% of all samples analyzed. One or more plates of eosin methylene blue are streaked with sample to be analyzed. The streaked plates are incubated for 24 ± 2 hr at 35 ± 0.5°C. After incubation, transfer one or more typical colonies (nucleated, with or without metallic sheen) to a lauryl tryptose broth fermentation tube and a nutrient agar slant. The fermentation tubes and agar slants are incubated at 35 ± 0.5°C for 24 ± 2 hr, or for 48 ± 3 hr if gas is not produced. From the agar slants corresponding to the fermentation tubes in which gas formation occurs, gram-stained samples are examined

microscopically. The formation of gas in the fermentation tube and the presence of gram-negative, non-spore-forming, rod-shaped bacteria in the agar culture may be considered a satisfactorily completed test, demonstrating the positive presence of coliform bacteria in the analyzed sample.

2.2 More detailed treatment of this method is presented in Standard Methods for the Examination of Water and Wastewater and in Microbiological Methods for Monitoring the Environment (see References, Section 10.0).

3.0 INTERFERENCES

3.1 The distribution of bacteria in water is irregular. Thus, a five-tube test is required in this method for adequate statistical accuracy.

3.2 The presence of residual chlorine or other halogens can prevent the continuation of bacterial action. To prevent this occurrence, sodium thiosulfate should be added to the sterile sample container.

3.3 Water samples high in copper, zinc, or other heavy metals can be toxic to bacteria. Chelating agents such as ethylenediaminetetraacetic acid (EDTA) should be added only when heavy metals are suspected of being present.

3.4 It is important to keep in mind that MPN tables are probability calculations and inherently have poor precision. They include a 23% positive bias that generally results in high value. The precision of the MPN can be improved by increasing the number of sample portions examined and the number of samples analyzed from the same sampling point.

4.0 APPARATUS AND MATERIALS

4.1 Incubators:

4.1.1 Incubators must maintain a uniform and constant temperature at all times in all areas, that is, they must not vary more than ±0.5°C in the areas used. Obtain such accuracy by using a water-jacketed or anhydric-type incubator with thermostatically controlled low-temperature electric heating units properly insulated and located in or adjacent to the walls or floor of the chamber and preferably equipped with mechanical means of circulating air. If a hot-air type incubator is used, humidity must be maintained at 75-80%.

4.1.2 Alternatively, use special incubating rooms well insulated and equipped with properly distributed heating units and with forced air circulation, provided that they conform to desired temperature limits and relative humidity. When such rooms are used, record the daily temperature range in areas where plates or tubes are incubated. Provide incubators with open metal wire or sheet shelves so spaced as to assure temperature uniformity throughout the chamber. Leave a 2.5-cm space between walls and stacks of dishes or baskets of tubes.

4.1.3 Maintain an accurate thermometer with the bulb immersed in liquid (glycerine, water, or mineral oil) on each shelf in use within the incubator and record daily temperature readings (preferably morning and afternoon). It is desirable, in addition, to maintain a maximum and minimum registering thermometer within the incubator on the middle shelf to record the gross temperature range over a 24-hr period. At intervals, determine temperature variations within the incubator when filled to maximum capacity. Install a recording thermometer, whenever possible, to maintain a continuous and permanent record of temperature. Mercury thermometers should be graduated in 0.5°C increments and calibrated annually against an NBS certified thermometer. Dial thermometers should be calibrated quarterly.

4.1.4 Keep water depth in the water bath sufficient to immerse tubes to upper level of media.

4.2 Hot-air sterilizing ovens: Use hot-air sterilizing ovens of sufficient size to prevent internal crowding, constructed to give uniform and adequate sterilizing temperatures of 170 ± 10°C and equipped with suitable thermometers. As an alternative, use a temperature-recording instrument.

4.3 Autoclaves:

4.3.1 Use autoclaves of sufficient size to prevent internal crowding, constructed to provide uniform temperatures within the chambers (up to and including the sterilization temperature of 121°C); equipped with an accurate thermometer, the bulb of which is located properly on the exhaust line so as to register minimum temperature within the sterilizing chambers (temperature-recording instrument is optional); equipped with pressure gauge and properly adjusted safety valves connected directly with saturated-steam power lines or directly to a suitable special steam generator (do not use steam from a boiler treated with amines for corrosion control); and capable of reaching the desired temperature within 30 min.

4.3.2 Use of a vertical autoclave or pressure cooker is not recommended because of difficulty in adjusting and maintaining sterilization temperature and the potential hazard. If a pressure cooker is used in emergency or special circumstances, equip it with an efficient pressure gauge and a thermometer, the bulb of which is 2.5 cm above the water level.

4.4 Colony counters: Use Quebec-type colony counter, dark-field model preferred, or one providing equivalent magnification (1.5 diameters) and satisfactory visibility.

4.5 pH Equipment: Use electrometric pH meters, accurate to at least 0.1 pH units, for determining pH values of media. See Method 9040 for standardization of a pH meter.

4.6 Balances: Use balances providing a sensitivity of at least 0.1 g at a load of 150 g, with appropriate weights. Use an analytical balance having a sensitivity of 1 mg under a load of 10 g for weighing small quantities (less than 2 g) of materials. Single-pan rapid-weigh balances are most convenient.

4.7 Media preparation utensils: Use borosilicate glass or other suitable noncorrosive equipment such as stainless steel. Use glassware that is clean and free of residues, dried agar, or other foreign materials that may contaminate media.

4.8 Pipets and graduated cylinders:

4.8.1 Use pipets of any convenient size, provided that they deliver the required volume accurately and quickly. The error of calibration for a given manufacturer's lot must not exceed 2.5%. Use pipets having graduations distinctly marked and with unbroken tips. Bacteriological-transfer pipets or pipets conforming to the APHA standards given in the latest edition of Standard Methods for the Examination of Dairy Products may be used. Optimally, protect the mouth end of all pipets by a cotton plug to eliminate hazards to the worker or possible sample contamination by saliva.

4.8.2 Use graduated cylinders meeting ASTM Standards (D-86 and D-216) and with accuracy limits established by the National Bureau of Standards, where appropriate.

4.9 Pipet containers: Use boxes of aluminum or stainless steel, end measurement 5 to 7.5 cm, cylindrical or rectangular, and length about 40 cm. When these are not available, paper wrappings may be substituted. To avoid excessive charring during sterilization, use best-quality sulfate pulp (Kraft) paper. Do not use copper or copper alloy cans or boxes as pipet containers.

4.10 Dilution bottles or tubes:

4.10.1 Use bottles or tubes of resistant glass, preferably borosilicate glass, closed with glass stoppers or screw caps equipped with liners that do not produce toxic or bacteriostatic compounds on sterilization.

4.10.2 Do not use cotton plugs as closures. Mark gradation levels indelibly on side of dilution bottle or tube. Plastic bottles of nontoxic material and acceptable size may be substituted for glass, provided that they can be sterilized properly.

4.11 Petri dishes: Use glass or plastic Petri dishes about 100 x 15 mm. Use dishes the bottoms of which are free from bubbles and scratches and flat so that the medium will be of uniform thickness throughout the plate. For the membrane-filter technique, use loose-lid glass or plastic dishes, 60 x 15 mm, or tight-lid dishes, 50 x 12 mm. Sterilize Petri dishes and store in metal cans (aluminum or stainless steel, but not copper), or wrap in paper -- preferably best-quality sulfate pulp (Kraft) -- before sterilizing.

4.12 Fermentation tubes and vials: Use only 10-mm x 75-mm fermentation tubes. When tubes are used for a test of gas production, enclose a shell vial, inverted. Use a vial of such size that it will be filled completely with medium and at least partly submerged in the tube.

4.13 Inoculating equipment: Use wire loops made of 22- or 24-gauge nickel alloy (chromel, nichrome, or equivalent) or platinum-iridium for flame sterilization. Single-service transfer loops of aluminum or stainless steel are satisfactory. Use loops at least 3 mm in diameter. Sterilize by dry heat or steam. Single-service hardwood applicators also may be used. Make these 0.2 to 0.3 cm in diameter and at least 2.5 cm longer than the fermentation tube; sterilize by dry heat and store in glass or other nontoxic containers.

5.0 REAGENTS

5.1 ASTM Type II water (ASTM D1193): Water should be monitored for impurities.

5.2 Buffered water:

5.2.1 To prepare stock phosphate buffer solution, dissolve 34.0 g potassium dihydrogen phosphate (KH_2PO_4) in 500 mL Type II water, adjust to pH 7.2 ± 0.5 with 1 N sodium hydroxide (NaOH), and dilute to 1 liter with Type II water.

5.2.2 Add 1.25 mL stock phosphate buffer solution and 5.0 mL magnesium chloride solution (38 g $MgCl_2$/liter Type II water or 81.1 g $MgCl_2 \cdot 6H_2O$/liter Type II water) to 1 liter Type II water. Dispense in amounts that will provide 99 ± 2.0 mL or 9 ± 0.2 mL after autoclaving for 15 min.

5.2.3 Peptone water: Prepare a 10% solution of peptone in Type II water. Dilute a measured volume to provide a final 0.1% solution. Final pH should be 6.8.

5.2.4 Dispense in amounts to provide 99 ± 2.0 mL or 9 ± 0.2 mL after autoclaving for 15 min.

5.2.5 Do not suspend bacteria in any dilution water for more than 30 min at room temperature because death or multiplication may occur, depending on the species.

5.3 Lauryl tryptose broth:

5.3.1 Components of the broth are:

Tryptose	20.0	g
Lactose	5.0	g
Diphosphate hydrogen phosphate, K_2HPO_4	2.75	g
Potassium dihydrogen phosphate, KH_2PO_4	2.75	g
Sodium chloride, NaCl	5.0	g
Sodium lauryl sulfate	0.1	g
Type II water	1	liter

Lauryl tryptose broth is also available in a prepackaged dry powder form.

5.3.2 Make lauryl tryptose broth of such strength that adding 100-mL or 10-mL portions of sample to medium will not reduce ingredient concentrations below those of the standard medium. Prepare in accordance with Table 1.

TABLE 1. PREPARATION OF LAURYL TRYPTOSE BROTH

Inoculum (mL)	Amount of Medium in Tube (mL)	Volume of Medium + Inoculum (mL)	Dehydrated Lauryl Tryptose Broth Required (g/liter)
1	10 or more	11 or more	35.6
10	10	20	71.2
10	20	30	53.4
100	50	150	106.8
100	35	135	137.1
100	20	120	213.6

5.3.3 Dispense the broth into fermentation tubes which contain inverted vials. Add an amount sufficient to cover the inverted vial, at least partially, after sterilization has taken place. Sterilize at 121°C for 12 to 15 min. The pH should be 6.8 ± 0.2 after sterilization.

5.4 Brilliant green lactose bile broth:

5.4.1 Components of the broth are:

Peptone	10.0	g
Lactose	10.0	g
Oxgall	20.0	g
Brilliant green	0.0133	g
Type II water	1	liter

This broth is also available in a prepackaged dry powder form.

5.4.2 Dispense the broth into fermentation tubes which contain inverted vials. Add an amount sufficient to cover the inverted vial, at least partially, after sterilization has taken place. Sterilize at 121°C for 12 to 15 min. The pH should be 7.2 ± 0.2 after sterilization.

5.5 Ammonium oxalate-crystal violet (Hucker's): Dissolve 2 g crystal violet (90% dye content) in 20 mL 95% ethyl alcohol, dissolve 0.8 g $(NH_4)_2C_2O_4 \cdot H_2O$ in 80 mL Type II water, mix the two solutions, and age for 24 hr before use; filter through paper into a staining bottle.

5.6 Lugol's solution, Gram's modification: Grind 1 g iodine crystals and 2 g KI in a mortar. Add Type II water, a few milliliters at a time, and grind thoroughly after each addition until solution is complete. Rinse solution into an amber glass bottle with the remaining water (using a total of 300 mL).

5.7 Counterstain: Dissolve 2.5 g safranin dye in 100 mL 95% ethyl alcohol. Add 10 mL to 100 mL Type II water.

5.8 Acetone alcohol: Mix equal volumes of ethyl alcohol, 95%, with acetone.

5.9 Gram staining kits: Commercially available kits may be substituted for 5.5, 5.6, 5.7, and 5.8.

6.0 SAMPLE COLLECTION, PRESERVATION, AND HANDLING

6.1 All samples must have been collected using a sampling plan that addresses the considerations discussed in U.S. EPA, 1978.

6.2 Clean all glassware thoroughly with a suitable detergent and hot water, rinse with hot water to remove all traces of residual washing compound, and finally rinse with Type II water. If mechanical glassware washers are used, equip them with influent plumbing of stainless steel or other nontoxic material. Do not use copper piping to distribute Type II water. Use stainless steel or other nontoxic material for the rinse-water system.

6.2.1 Sterilize glassware, except when in metal containers, for not less than 60 min at a temperature of 170°C, unless it is known from recording thermometers that oven temperatures are uniform, under which exceptional condition use 160°C. Heat glassware in metal containers to 170°C for not less than 2 hr.

6.2.2 Sterilize sample bottles not made of plastic as above, or in an autoclave at 121°C for 15 min. Perform a sterility check on one bottle per batch.

6.2.3 If water containing residual chlorine and other halogens is to be collected, add sufficient $Na_2S_2O_3$ to clean sample bottle before sterilization to give a concentration of about 100 mg/L in the sample. To a 120-mL bottle add 0.1 mL 10% solution of $Na_2S_2O_3$ (this will neutralize a sample containing about 15 mg/L residual chlorine). Stopper bottle, cap, and sterilize by either dry or moist heat, as directed previously.

6.2.4 Collect water samples high in copper or zinc and wastewater samples high in heavy metals in sample bottles containing a chelating agent that will reduce metal toxicity. This is particularly significant when such samples are in transit for 4 hr or more. Use 372 mg/L of the tetrasodium salt of ethylenediaminetetraacetic acid (EDTA). Adjust EDTA solution to pH 6.5 before use. Add EDTA separately to sample bottle before bottle sterilization (0.3 mL 15% solution in a 120-mL bottle) or combine it with the $Na_2S_2O_3$ solution before addition.

6.3 When the sample is collected, leave ample air space in the bottle (at least 2.5 cm) to facilitate mixing by shaking, preparatory to examination. Be careful to take samples that will be representative of the water being tested and avoid sample contamination at time of collection or in period before examination.

6.4 Keep sampling bottle closed until the moment it is to be filled. Remove stopper and hood or cap as a unit, taking care to avoid soiling. During sampling, do not handle stopper or cap and neck of bottle and protect them from contamination. Hold bottle near base, fill it without rinsing, replace stopper or cap immediately, and secure hood around neck of bottle.

7.0 PROCEDURE

7.1 Presumptive stage:

7.1.1 Inoculate a series of fermentation tubes ("primary" fermentation tubes) with appropriate graduated quantities (multiples and submultiples of 1 mL) of sample. Be sure that the concentration of nutritive ingredients in the mixture of medium and added sample conforms to the requirements given in Paragraph 5.3. Use a sterile pipet for initial and subsequent transfers from each sample container. If the pipet becomes contaminated before transfers are completed, replace with a sterile pipet. Use a separate sterile pipet for transfers from each different dilution. Do not prepare dilutions in direct sunlight. Use caution when removing sterile pipets from the container; to avoid contamination, do not drag pipet tip across exposed ends of pipets or across lips and necks of dilution bottles. When removing sample, do not insert pipets more than 2.5 cm below the surface of sample or dilution. When discharging sample portions, hold pipet at an angle of about 45°, with tip touching the inside neck of the tube. The portions of sample used for inoculating lauryl-tryptose-broth fermentation tubes will vary in size and number with the character of the water under examination, but

in general use decimal multiples and submultiples of 1 mL. Use Figure 1 as a guide to preparing dilutions. After adding sample, mix thoroughly by shaking the test tube rack. Do not invert the tubes.

7.1.2 Incubate inoculated fermentation tubes at 35 ± 0.5°C. After 24 ± 2 hr shake each tube gently and examine it and, if no gas has formed and been trapped in the inverted vial, reincubate and reexamine at the end of 48 ± 3 hr. Record presence or absence of gas formation, regardless of amount, at each examination of the tubes.

7.1.3 Formation of gas in any amount in the inner fermentation tubes or vials within 48 ± 3 hr constitutes a positive presumptive test. Do not confuse the appearance of an air bubble in a clear tube with actual gas production. If gas is formed as a result of fermentation, the broth medium will become cloudy. Active fermentation may be shown by the continued appearance of small bubbles of gas throughout the medium outside the inner vial when the fermentation tube is shaken gently.

7.1.4 The absence of gas formation at the end of 48 ± 3 hr of incubation constitutes a negative test. An arbitrary limit of 48 hr for observation doubtless excludes from consideration occasional members of the coliform group that form gas very slowly and generally are of limited sanitary significance.

7.2 Confirmed stage:

7.2.1 Submit all primary fermentation tubes showing any amount of gas within 24 hr of incubation to the Confirmed Test. If active fermentation appears in the primary fermentation tube earlier than 24 hr, transfer to the confirmatory medium without waiting for the full 24-hr period to elapse. If additional primary fermentation tubes show gas production at the end of 48-hr incubation, submit these to the Confirmed Test.

7.2.2 Gently shake or rotate primary fermentation tube showing gas and do one of two things: (a) with a sterile metal loop, 3 mm in diameter, transfer one loopful of culture to a fermentation tube containing brilliant green lactose bile broth, or (b) insert a sterile wooden applicator at least 2.5 cm long into the culture, remove it promptly, and plunge it to the bottom of fermentation tube containing brilliant green lactose bile broth. Remove and discard applicator.

7.2.3 Incubate the inoculated brilliant green lactose bile broth tube for 48 ± 3 hr at 35 ± 0.5°C. Formation of gas in any amount in the inverted vial of the brilliant green lactose bile broth fermentation tube at any time within 48 ± 3 hr constitutes a positive Confirmed Test.

7.3 Completed test:

7.3.1 Use the Completed Test on positive confirmed tubes to establish definitely the presence of coliform bacteria and provide quality control data for 20% of all samples analyzed.

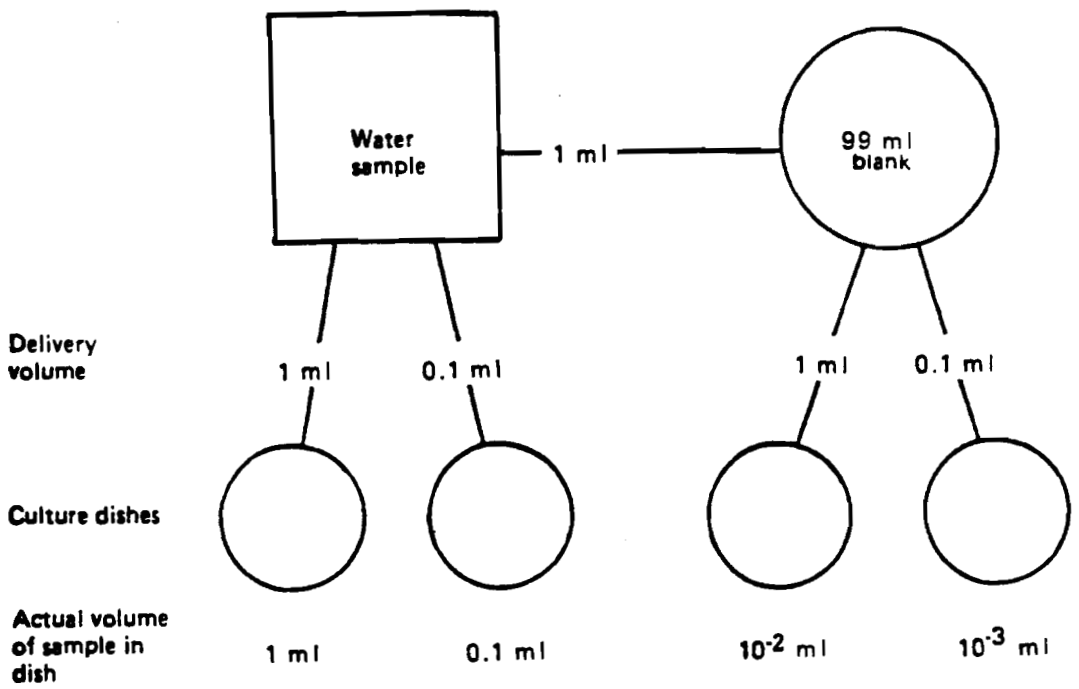

Figure 1. Preparation of dilutions.

7.3.2 Streak one or more eosin methylene blue plates from each tube of brilliant green lactose bile broth showing gas as soon as possible after the appearance of gas. Streak plates to ensure presence of some discrete colonies separated by at least 0.5 cm. Observe the following precautions when streaking plates to obtain a high proportion of successful isolations if coliform organisms are present: (a) use an inoculating needle slightly curved at the tip; (b) tap and incline the fermentation tube to avoid picking up any membrane or scum on the needle; (c) insert end of needle into the liquid in the tube to a depth of approximately 5.0 mm; and (d) streak plate with curved section of the needle in contact with the agar to avoid a scratched or torn surface.

7.3.3 Incubate plates (inverted) at 35 ± 0.5°C for 24 ± 2 hr.

7.3.4 The colonies developing on eosin methylene blue agar are called: typical (nucleated, with or without metallic sheen); atypical (opaque, unnucleated, mucoid, pink after 24-hr incubation); or negative (all others). From each of these plates, pick one or more typical well-isolated coliform colonies or, if no typical colonies are present, pick two or more colonies considered most likely to consist of organisms of the coliform group and transfer growth from each isolate to a lauryl-tryptose-broth fermentation tube and to a nutrient agar slant.

NOTE: If possible, when transferring colonies, choose well-isolated colonies and barely touch the surface of the colony with a flame-sterilized, air-cooled transfer needle to minimize the danger of transferring a mixed culture.

7.3.5 Incubate secondary broth tubes at 35 ± 0.5°C for 24 ± 2 hr; if gas is not produced within 24 ± 2 hr, reincubate and examine again at 48 ± 3 hr. Microscopically examine gram-stained preparations (see Paragraph 7.4) from those 24-hr agar slant cultures corresponding to the secondary tubes that show gas.

7.3.6 Formation of gas in the secondary tube of lauryl tryptose broth within 48 ± 3 hr and demonstration of gram-negative, non-spore-forming, rod-shaped bacteria in the agar culture constitute a satisfactory Completed Test, demonstrating the presence of a member of the coliform group.

7.4 Gram-stain procedure:

7.4.1 Prepare a light emulsion of the bacterial growth from an agar slant in a drop of Type II water on a glass slide. Air-dry or fix by passing the slide through a flame and stain for 1 min with the ammonium oxalate-crystal violet solution. Rinse the slide in tap water; apply Lugol's solution for 1 min. (See Paragraphs 5.5-5.8 for reagent.)

7.4.2 Rinse the stained slide in tap water. Decolorize for approximately 15 to 30 sec with acetone alcohol by holding slide between the fingers and letting acetone alcohol flow across the stained smear until no more stain is removed. Do not over-decolorize. Counterstain with safranin (Paragraph 5.7) for 15 sec, then rinse with tap water, blot dry with bibulous paper, and examine microscopically.

7.4.3 Cells that decolorize and accept the safranin stain are pink and defined as gram-negative in reaction. Cells that do not decolorize but retain the crystal violet stain are deep blue and are defined as gram-positive.

7.5 Computing and recording of MPN:

7.5.1 The calculated density of coliform bacteria in a sample can be obtained from the MPN table, based on the number of positive tubes in each dilution of the confirmed or completed test. Table 2 shows MPN indices and 95% confidence limits for potable water testing, and Table 3 describes the MPN indices and 95% confidence limits for general use.

TABLE 2. MPN INDEX AND 95% CONFIDENCE LIMITS FOR VARIOUS COMBINATIONS OF POSITIVE AND NEGATIVE RESULTS WHEN FIVE 10-mL PORTIONS ARE USED

Number of Tubes Giving Positive Reaction out of 5 of 10 mL each	MPN Index per 100 mL	95% Confidence Limits	
		Lower	Upper
0	<2.2	0	6.0
1	2.2	0.1	12.6
2	5.1	0.5	19.2
3	9.2	1.6	29.4
4	16	3.3	52.9
5	>16	8.0	Infinite

7.5.2 Three dilutions are necessary for the determination of the MPN index. For example (see Table 3), if five 10-mL, five 1.0-mL, and five 0.1-mL portions of the samples are used as inocula and four of the 10-mL, two of the 1-mL, and none of the 0.1-mL portions of inocula give positive results, the coded result is 4-2-0 and the MPN index is 22 per 100 mL.

7.5.3 In cases when the serial decimal dilution is other than 10, 1, and 0.1 mL, or when more than three sample volumes are used in the series, refer to the sources cited in Section 10.0, References, for the necessary density determination procedures.

7.5.4 All MPN values for water samples should be reported on the basis of a 100-mL sample.

8.0 QUALITY CONTROL

8.1 Extensive quality control procedures are provided in Part IV of U.S. EPA, 1978 (see Section 10.0, References). These procedures should be adhered to at all times.

TABLE 3. MPN INDEX FOR SERIAL DILUTIONS OF SAMPLE

Number of Tubes Giving Positive Reaction out of			MPN Index per 100 mL	95% Confidence Limits	
5 of 10 mL each	5 of 1 mL each	5 of 0.1 mL each		Lower	Upper
0	0	0	<2		
0	0	1	2	<0.5	7
0	1	0	2	<0.5	7
0	2	0	4	<0.5	11
1	0	0	2	<0.5	7
1	0	1	4	<0.5	11
1	1	0	4	<0.5	11
1	1	1	6	<0.5	15
1	2	0	6	<0.5	15
2	0	0	5	<0.5	13
2	0	1	7	1	17
2	1	0	7	1	17
2	1	1	9	2	21
2	2	0	9	2	21
2	3	0	12	3	28
3	0	0	8	1	19
3	0	1	11	2	25
3	1	0	11	2	25
3	1	1	14	4	34
3	2	0	14	4	34
3	2	1	17	5	46
3	3	0	17	5	46
4	0	0	13	3	31
4	0	1	17	5	46
4	1	0	17	5	46
4	1	1	21	7	63
4	1	2	26	9	78

Source: U.S. EPA, 1978.

(Continued on next page)

TABLE 3. MPN INDEX FOR SERIAL DILUTIONS OF SAMPLE
(Continued)

Number of Tubes Giving Positive Reaction out of			MPN Index per 100 mL	95% Confidence Limits	
5 of 10 mL each	5 of 1 mL each	5 of 0.1 mL each		Lower	Upper
4	2	0	22	7	67
4	2	1	26	9	78
4	3	0	27	9	80
4	3	1	33	11	93
4	4	0	34	12	93
5	0	0	23	7	70
5	0	1	31	11	89
5	0	2	43	15	110
5	1	0	33	11	93
5	1	1	46	16	120
5	1	2	63	21	150
5	2	0	49	17	130
5	2	1	70	23	170
5	2	2	94	28	220
5	3	0	79	25	190
5	3	1	110	31	250
5	3	2	140	37	340
5	3	3	180	44	500
5	4	0	130	35	300
5	4	1	170	43	490
5	4	2	220	57	700
5	4	3	280	90	850
5	4	4	350	120	1000
5	5	0	240	68	750
5	5	1	350	120	1000
5	5	2	540	180	1400
5	5	3	920	300	3200
5	5	4	1600	640	5800
5	5	5	$\geq$2400		

Source: U.S. EPA, 1978.

8.2 Samples must be maintained as closely as possible to original condition by careful handling and storage. Sample sites and sampling frequency should provide data representative of characteristics and variability of the water quality at that site. Samples should be analyzed immediately. They should be refrigerated at a temperature of 1-4°C and analyzed within 6 hr.

8.3 Quality control of culture media is critical to the validity of microbiological analysis. Some important factors to consider are summarized below:

8.3.1 Order media to last for only 1 yr; always use oldest stock first. Maintain an inventory of all media ordered, including a visual inspection record.

8.3.2 Hold unopened media for no longer than 2 yr. Opened media containers should be discarded after 6 mo.

8.3.3 When preparing media keep containers open as briefly as possible. Prepare media in deionized or distilled (Type II) water of proven quality. Check the pH of the media after solution and sterilization; it should be within 0.2 units of the stated value. Discard and remake if it is not.

8.3.4 Autoclave media for the minimal time specified by the manufacturer because the potential for damage increases with increased exposure to heat. Remove sterile media from the autoclave as soon as pressure is zero. Effectiveness of the sterilization should be checked weekly, using strips or ampuls of Bacillus stearothemophelus.

8.3.5 Agar plates should be kept slightly open for 15 min after pouring or removal from refrigeration to evaporate free moisture. Plates must be free of lumps, uneven surfaces, pock marks, or bubbles, which can prevent good contact between the agar and medium.

8.3.6 Avoid shaking fermentation tubes, which can entrap air in the inner vial and produce a false positive result.

8.3.7 Store fermentation tube media in the dark at room temperature or 4°C. If refrigerated, incubate overnight at room temperature to detect false positive gas bubbles.

8.3.8 Quality control checks of prepared media should include the incubation of 5% of each batch of medium for 2 days at 35°C to inspect for growth and positive/negative checks with pure culture.

8.4 Analytical quality control procedures should include:

8.4.1 Duplicate analytical runs on at least 10% of all known positive samples analyzed.

8.4.2 At least one positive control sample should be run each month for each parameter tested.

8.4.3 At least one negative (sterile) control should be run with each series of samples using buffered water and the medium batch used at the beginning of the test series and following every tenth sample. When sterile controls indicate contamination, new samples should be obtained and analyzed.

8.4.4 The Type II water used should be periodically checked for contamination.

8.4.5 For routine MPN tests, at least 5% of the positive confirmed samples should be tested by the complete test.

9.0 METHOD PERFORMANCE

9.1 No data provided.

10.0 REFERENCES

1. Standard Methods for the Examination of Water and Wastewater, 15th ed. (1980).

2. U.S. Environmental Protection Agency, Microbiological Methods for Monitoring the Environment, EPA 600/8-78-017, December 1978.

TOTAL COLIFORM: MULTIPLE TUBE FERMENTATION TECHNIQUE

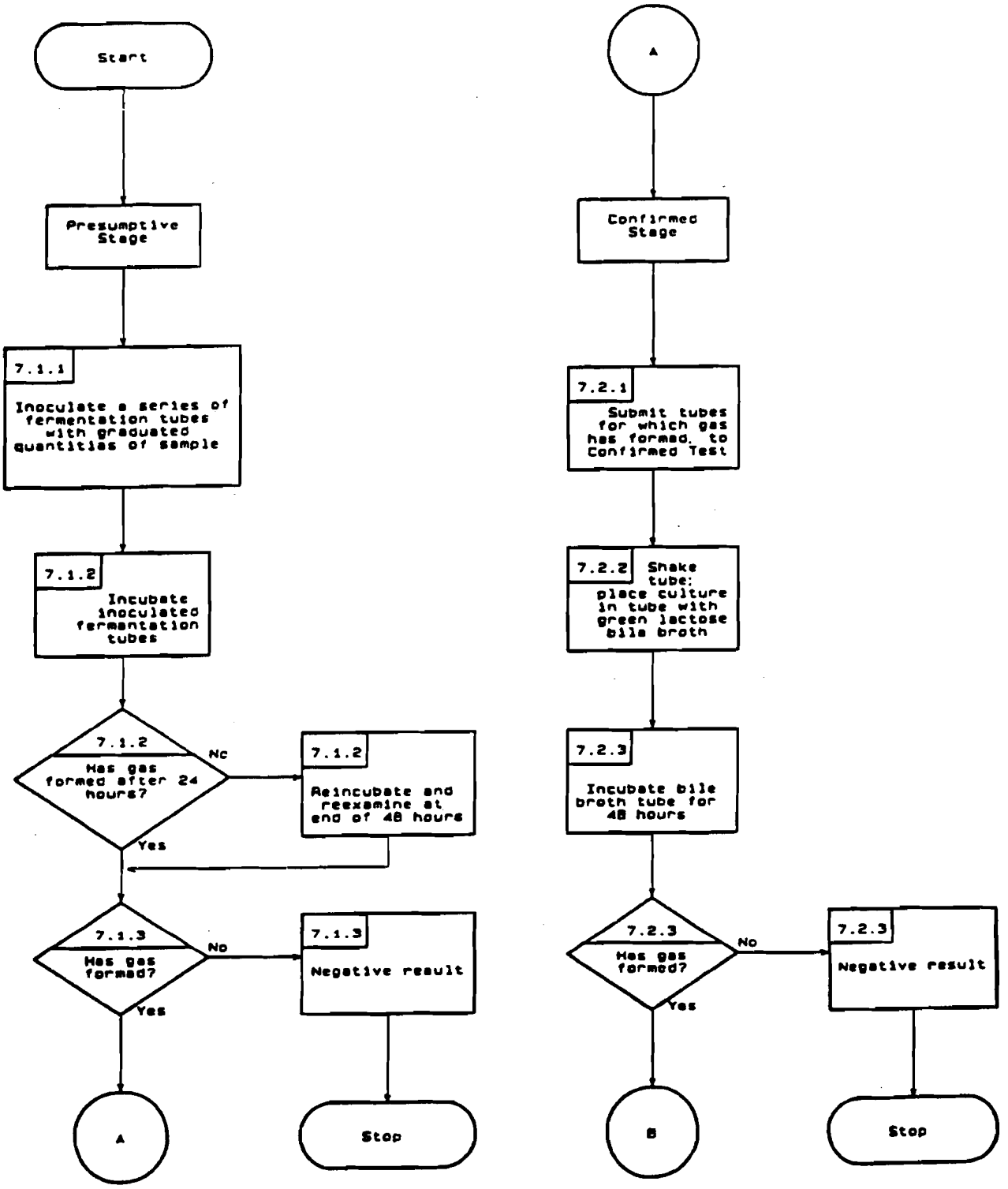

TOTAL COLIFORM: MULTIPLE TUBE FERMENTATION TECHNIQUE
(Continued)

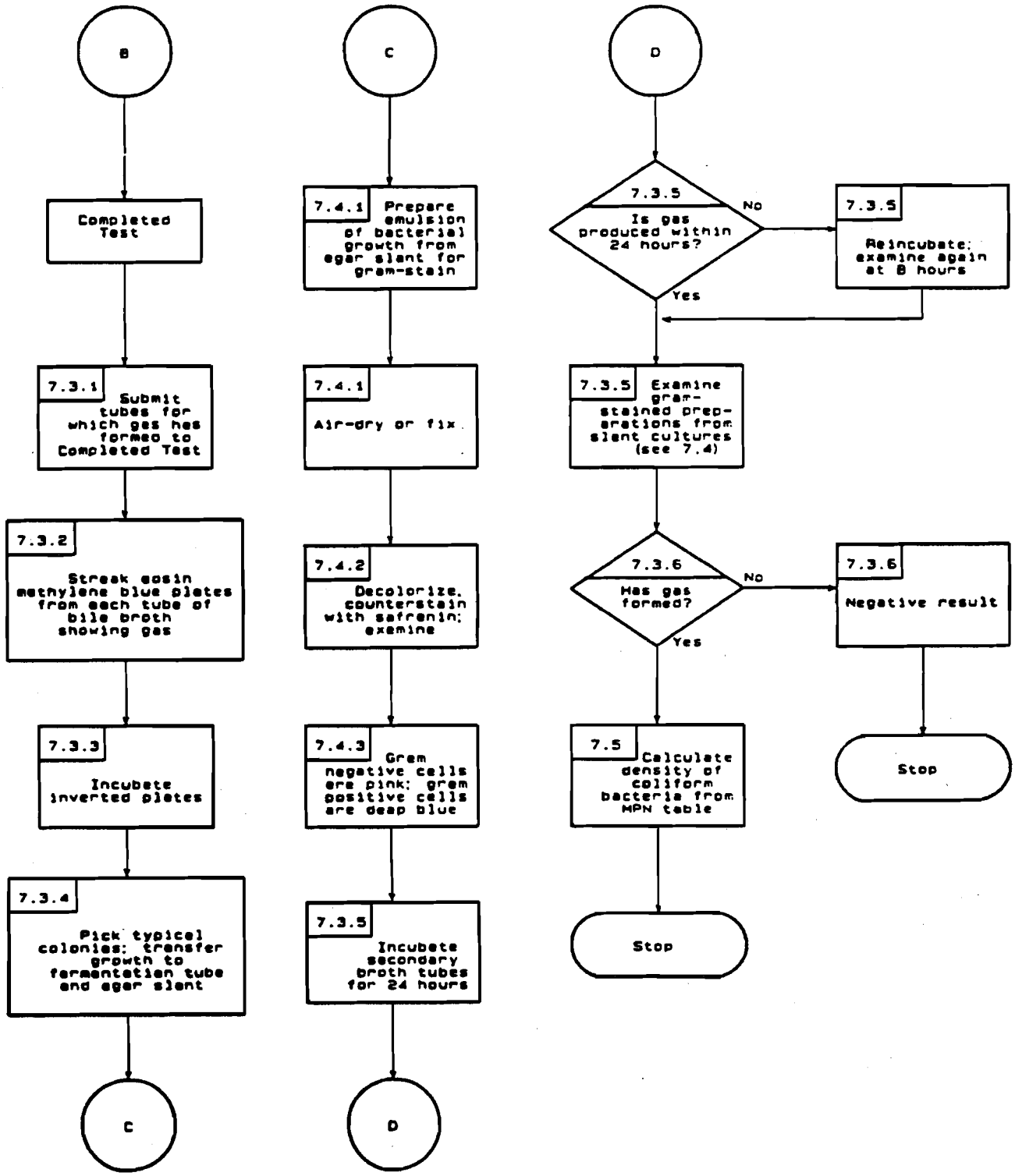

METHOD 9132

TOTAL COLIFORM: MEMBRANE-FILTER TECHNIQUE

1.0 SCOPE AND APPLICATION

1.1 This method is used to determine the presence of a member of a coliform group in wastewater and ground water.

1.2 The coliform group analyzed in this procedure includes all of the organisms that produce a colony with a golden-green metallic sheen within 24 hr of inoculation.

2.0 SUMMARY OF METHOD

2.1 A predetermined amount of sample is filtered through a membrane filter which retains the bacteria found in the sample.

2.2 In the two-step enrichment procedure, the filters containing bacteria are placed on an absorbent pad saturated with lauryl tryptose broth and incubated at 35°C ± 0.5°C for 2 hr. The filters are then transferred to an absorbent pad saturated with M-Endo media or to a dish containing M-Endo agar and incubated for another 21 ± 1 hr at 35°C ± 0.5°C. Sheen colonies are then counted under magnification and reported per 100 mL of original sample.

2.3 A more detailed treatment of this method is presented in Standard Methods for the Examination of Water and Wastewater and in Microbiological Methods for Monitoring the Environment (see References, Section 10.0).

3.0 INTERFERENCES

3.1 The presence of residual chlorine or other halogen can prevent the continuation of bacterial action. To prevent this occurrence, sodium thiosulfate should be added.

3.2 Water samples high in copper, zinc, or other heavy metals can be toxic to bacteria. Chelating agents such as ethylenediaminetetraacetic acid (EDTA) should only be added when heavy metals are suspected of being present.

3.3 Turbidity caused by the presence of algae or other interfering material may not permit testing of a sample volume sufficient to yield significant results. Low coliform estimates may be caused by the presence of high numbers of noncoliforms or of toxic substances.

3.4 Samples containing large amounts of suspended solids will interfere with colony growth and with the subsequent counting of colonies on the filter membrane. When this is the case, use Method 9131.

4.0 APPARATUS AND MATERIALS

4.1 Dilution bottles or tubes:

4.1.1 Use bottles or tubes of resistant glass, preferably borosilicate glass, closed with glass stoppers or screw caps equipped with liners that do not produce toxic or bacteriostatic compounds on sterilization.

4.1.2 Do not use cotton plugs as closures. Mark graduation levels indelibly on side of dilution bottle or tube. Plastic bottles of nontoxic material and acceptable size may be substituted for glass, provided that they can be sterilized properly.

4.2 Pipets and graduated cylinders:

4.2.1 Use pipets of any convenient size, provided that they deliver the required volume accurately and quickly. The error of calibration for a given manufacturer's lot must not exceed 2.5%. Use pipets having graduations distinctly marked and with unbroken tips. Bacteriological-transfer pipets or pipets conforming to the APHA standards given in the latest edition of Standard Methods for the Examination of Dairy Products may be used. Optimally, protect the mouth end of all pipets by a cotton plug to eliminate hazards to the worker or possible sample contamination by saliva.

4.2.2 Use graduated cylinders meeting ASTM Standards (D-86 and D216) and with accuracy limits established by the National Bureau of Standards where appropriate.

4.3 Containers for culture medium:

4.3.1 Use clean borosilicate glass flasks presterilized to reduce bacterial contamination. Any size or shape of flask may be used, but Erlenmeyer flasks with metal caps, metal foil covers, or screw caps provide for adequate mixing of the medium and are convenient for storage.

4.4 Culture dishes:

4.4.1 Use Petri-type dishes, 60 by 15 mm, 50 x 12 mm, or other appropriate size. The bottoms of the dishes should be flat and large enough so that the absorbent pads for the culture nutrient will lie flat. Wrap clean culture dishes before sterilization, singly or in convenient numbers, in metal foil if sterilized by dry heat, or in suitable paper substitute when autoclaved. If glass Petri dishes are used, use borosilicate or equivalent glass. Because covers for such dishes are loose fitting, take precautions to prevent possible loss of medium by evaporation, with resultant change in medium concentration, and to maintain a humid environment for optimal colony development.

4.4.2 Disposable plastic dishes that are tight fitting and meet the specifications noted above also may be used. Suitable sterile plastic dishes are available commercially.

4.5 Filtration units:

4.5.1 The filter-holding assembly (constructed of glass, autoclavable plastic, porcelain, or any noncorrosive bacteriologically inert metal) consists of a seamless funnel fastened by a locking device or held in place by magnetic force or gravity. The design should be such that the membrane filter will be held securely on the porous plate of the receptacle without mechanical damage and all fluid will pass through the membrane during filtration.

4.5.2 Separately wrap the two parts of the assembly in heavy wrapping paper for sterilization by autoclaving and storage until use. Alternatively, treat unwrapped parts by ultraviolet radiation before using them. Field units may be sanitized by igniting methyl alcohol or immersing in boiling water for 5 min. Do not ignite plastic parts.

4.5.3 For filtration, mount receptacle of filter-holding assembly in a 1-liter filtering flask with a side tube or other suitable device such that a pressure differential can be exerted on the filter membrane. Connect flask to an electric vacuum pump, a filter pump operating on water pressure, a hand aspirator, or other means of securing pressure differential. Connect an additional flask between filtering flask and vacuum source to trap carry-over water.

4.6 Filter membranes:

4.6.1 Use membrane filters with a rated pore diameter such that there is complete retention of coliform bacteria (0.45 $\pm$ 0.02 um). Use only those filter membranes that have been found, through adequate quality control testing and certification by the manufacturer, to exhibit full retention of the organisms to be cultivated, stability in use, freedom from chemical extractables inimical to the growth and development of bacteria, a satisfactory speed of filtration, no significant influence on medium pH, and no increase in number of confluent colonies or spreaders. Preferably, use membranes grid-marked in such a manner that bacterial growth is neither inhibited nor stimulated along the grid lines. Store membrane filters held in stock in an environment without extremes of temperature and humidity. Obtain no more than a year's supply at any one time.

4.6.2 If presterilized membrane filters are to be used, use those for which the manufacturer has certified that the sterilization technique has neither induced toxicity nor altered the chemical or physical properties of the membrane. If the membranes are sterilized in the laboratory, remove the paper separators -- but not the absorbent paper pads -- from the packaged filters. Divide filters into groups of 10 to 12, or other convenient units, and place in 10-cm Petri dishes or wrap in heavy wrapping paper. Autoclave for 10 min at 121°C. At the end of the sterilization period, let the steam escape rapidly to minimize accumulation of water condensation on filters.

4.7 Absorbent pads:

4.7.1 Absorbent pads consist of disks of filter paper or other material known to be of high quality and free of sulfites or other substances that could inhibit bacterial growth. Use pads approximately 48 mm in diameter and of sufficient thickness to absorb 1.8 to 2.2 mL of medium. Presterilized absorbent pads or pads subsequently sterilized in the laboratory should release less than 1 mg total acidity (calculated as $CaCO_3$) when titrated to the phenolphthalein end point, pH 8.3, using 0.02 N NaOH. Where there is evidence of absorbent pad toxicity, presoak pads in Type II water at 121°C (in an autoclave) for 15 min, decant the water, and repackage pads in a large Petri dish for sterilization and subsequent use. Sterilize pads simultaneously with membrane filters available in resealable Kraft envelopes or separately in other suitable containers. Dry pads so they are free of visible moisture before use. See sterilization procedure described above for membrane filters.

4.7.2 As a substrate substitution for nutrient-saturated absorbent pads, 1.5% agar may be added to the total coliform M-Endo broth medium.

4.8 Forceps:

4.8.1 Forceps should be round-tipped, without corrugations on the inner sides of the tips. Sterilize before use by dipping in 95% ethyl or absolute methyl alcohol and flaming.

4.9 Incubators

4.9.1 Use incubators to provide a temperature of 35 ± 0.5°C and to maintain a high level of humidity (approximately 90% relative humidity).

4.10 Microscope and light source:

4.10.1 Count membrane-filter colonies with a magnification of 10 to 15 diameters and a light source adjusted to give maximum sheen discernment. Optimally, use a binocular wide-field dissecting microscope. However, a small fluorescent lamp with magnifier is acceptable. Use cool-white fluorescent lamps. Do not use a microscope illuminator with optical system for light concentration from an incandescent light source for coliform colony identification on Endo-type media.

5.0 REAGENTS

5.1 ASTM Type II water (ASTM D1193): Water should be monitored for impurities.

5.2 M-Endo medium:

5.2.1 Components of the medium are:

Tryptose or polypeptone	10.0 g
Thiopeptone or thiotone	5.0 g
Casitone or trypticase	5.0 g
Yeast extract	1.5 g
Lactose	12.5 g
Sodium chloride, NaCl	5.0 g
Dipotassium hydrogen phosphate, K_2HPO_4	4.375 g
Potassium dihydrogen phosphate, KH_2PO_4	1.375 g
Sodium lauryl sulfate	0.050 g
Sodium desoxycholate	0.10 g
Sodium sulfite, Na_2SO_3	2.10 g
Basic fuchsin	1.05 g
Distilled (Type II) water	1 liter

5.2.2 Rehydrate in 1 liter Type II water containing 20 mL 95% ethanol. Heat to boiling in a water bath to avoid degradation of carbohydrates, promptly remove from heat, and cool to below 45°C. Do not sterilize by autoclaving. Final pH should be between 7.1 and 7.3.

5.2.3 Store finished medium in the dark at 2 to 10°C and discard any unused medium after 96 hr. Medium is light sensitive.

NOTE: This medium may be solidified by adding 1.2% to 1.5% agar before boiling.

5.3 Lauryl tryptose broth: See Method 9131, Paragraph 5.3.

6.0 SAMPLE COLLECTION, PRESERVATION, AND HANDLING

6.1 All samples must have been collected using a sampling plan that addresses the considerations discussed in Chapter Nine of this manual.

6.2 Clean all glassware thoroughly with a suitable detergent and hot water, rinse with hot water to remove all traces of residual washing compound, and finally, rinse with distilled (Type II) water. If mechanical glassware washers are used, equip them with influent plumbing of stainless steel or other nontoxic material. Do not use copper piping to distribute Type II water. Use stainless steel or other nontoxic material for the rinse-water system.

6.2.1 Sterilize glassware, except when in metal containers, for not less than 60 min at a temperature of 170°C, unless it is known from recording thermometers that oven temperatures are uniform, under which exceptional condition use 160°C. Heat glassware in metal containers to 170°C for not less than 2 hr.

6.2.2 Sterilize sample bottles not made of plastic, as above, or in an autoclave at 121°C for 15 min.

6.2.3 For plastic bottles that distort on autoclaving, use low-temperature ethylene oxide gas sterilization. If water containing residual chlorine and other halogens is to be collected, add sufficient $Na_2S_2O_3$ to clean sample bottle before sterilization to give a concentration of about 100 mg/L in the sample. To a 120-mL bottle add 0.1 mL 10% solution of $Na_2S_2O_3$ (this will neutralize a sample containing about 15 mg/L residual chlorine). Stopper bottle, cap, and sterilize by either dry or moist heat, as directed previously.

6.2.4 Collect water samples high in copper or zinc and wastewater samples high in heavy metals in sample bottles containing a chelating agent that will reduce metal toxicity. This is particularly significant when such samples are in transit for 4 hr or more. Use 372 mg/L of the tetrasodium salt of ethylenediaminetetraacetic acid (EDTA). Adjust EDTA solution to pH 6.5 before use. Add EDTA separately to sample bottle before bottle sterilization (0.3 mL 15% solution in a 120-mL bottle) or combine it with the $Na_2S_2O_3$ solution before addition.

6.3 When the sample is collected, leave ample air space in the bottle (at least 2.5 cm) to facilitate mixing by shaking, preparatory to examination. Be careful to take samples that will be representative of the water being tested and avoid sample contamination at time of collection or in period before examination.

6.4 Keep sampling bottle closed until the moment it is to be filled. Remove stopper and hood or cap as a unit, taking care to avoid soiling. During sampling, do not handle stopper or cap and neck of bottle, and protect them from contamination. Hold bottle near base, fill it without rinsing, replace stopper or cap immediately, and secure hood around neck of bottle.

6.5 Start bacteriological examination of a water sample promptly after collection to avoid unpredictable changes. If samples cannot be processed within 1 hr of collection, use an iced cooler for storage during transport to the laboratory.

6.6 Hold temperature of all stream pollution samples below 10°C during a maximum transport time of 6 hr. Refrigerate these samples upon receipt in the laboratory and process within 2 hr. When local conditions necessitate delays in delivery of samples longer than 6 hr, make field examinations using field laboratory facilities located at the site of collection or use delayed-incubation procedures.

7.0 PROCEDURES

7.1 Selection of sample size:

7.1.1 Size of sample will be governed by expected bacterial density, which in finished-water samples will be limited only by the degree of turbidity.

7.1.2 An ideal sample volume will yield growth of about 50 coliform colonies and not more then 200 colonies of all types. Examine finished waters by filtering duplicate portions of the same volume, such as 100 to 500 mL or more, or by filtering two diluted volumes. Examine other waters by filtering three different volumes, depending on the expected bacterial density. When less than 20 mL of sample (diluted or undiluted) is filtered, add a small amount of sterile dilution water to the funnel before filtration. This increase in water volume aids in uniform dispersion of the bacterial suspension over the entire effective filtering surface.

7.2 Filtration of sample:

7.2.1 Using sterile forceps, place a sterile filter over porous plate of receptacle, grid side up. Carefully place matched funnel unit over receptacle and lock it in place. Filter sample under partial vacuum. With filter still in place, rinse funnel by filtering three 20- to 30-mL portions of sterile dilution water. Unlock and remove funnel, immediately remove filter with sterile forceps, and place it on sterile pad or agar with a rolling motion to avoid entrapment of air.

7.2.2 Use sterile filtration units at the beginning of each filtration series as a minimum precaution to avoid accidental contamination. A filtration series is considered to be interrupted when an interval of 30 min or longer elapses between sample filtrations. After such interruption, treat any further sample filtration as a new filtration series and sterilize all membrane-filter holders in use.

7.2.3 Decontaminate this equipment between successive filtrations by use of flowing steam, boiling water, or, if available, an ultraviolet sterilizer. When using the UV sterilization procedure, a 2-min exposure to UV radiation is sufficient and should kill 99.9% of all bacteria. Eye protection is recommended to protect against stray radiation from a non-light-tight sterilization cabinet. This UV equipment is not commercially available and is not required, although its use is recommended.

7.3 Two-step enrichment technique:

7.3.1 Place a sterile absorbent pad in the upper half of a sterile culture dish and pipet enough enrichment medium (1.8 to 2.0 mL lauryl tryptose broth) to saturate pad. Carefully remove any surplus liquid.

Aseptically place filter through which the sample has been passed on pad. Incubate filter, without inverting dish, for 1.5 to 2 hr at 35 ± 0.5°C in an atmosphere of at least 90% relative humidity.

7.3.2 Remove enrichment culture from incubator, lift filter from enrichment pad, and roll it onto the agar surface. Incorrect filter placement is at once obvious, because patches of unstained membrane indicate entrapment of air. Where such patches occur, carefully reseat filter on agar surface. If the liquid medium is used, prepare final culture by removing enrichment culture from incubator and separating the dish halves. Place a fresh sterile pad in bottom half of dish and saturate it with 1.8 to 2.0 mL of final M-Endo medium. Transfer filter, with same precautions as above, to new pad. Discard used pad. With either the agar or the liquid medium, invert dish and incubate for 20 to 22 hr at 35 ± 0.5°C.

7.4 Counting:

7.4.1 The typical coliform colony has a pink to dark-red color with a metallic surface sheen. The sheen area may vary in size from a small pinhead to complete coverage of the colony surface. Count sheen colonies with the aid of a low-power (10 to 15 magnifications) binocular wide-field dissecting microscope or other optical device, with a cool-white fluorescent light source directed above and as nearly perpendicular as possible to the plane of the filter. The total count of colonies (coliform and noncoliform) on Endo-type medium has no relation to the total number of bacteria present in the original sample and, so far as is known, no significance can be inferred or correlation made with the quality of the water sample.

7.5 Calculation of coliform density:

7.5.1 Report coliform density as (total) coliforms/100 mL. Compute the count, using membrane filters with 20 to 80 coliform colonies and not more than 200 colonies of all types per membrane, by the following equation:

$$\text{(Total) coliform colonies/100 mL} = \frac{\text{coliform colonies counted} \times 100}{\text{mL sample filtered}}$$

7.5.2 Water of drinking-water quality:

7.5.2.1 With water of good quality, the number of coliform colonies will be less than 20 per membrane. In this event, count all coliform colonies and use the formula given above to obtain coliform density.

7.5.2.2 If confluent growth occurs, that is, growth covering either the entire filtration area of the membrane or a portion thereof, and colonies are not discrete, report results as "confluent growth with or without coliforms." If the total number of bacterial

colonies, coliforms plus noncoliforms, exceeds 200 per membrane, or if the colonies are too indistinct for accurate counting, report results as "too numerous to count" (TNTC). In either case, request a new sample and select more appropriate volumes to be filtered per membrane, remembering that the standard drinking-water portion is 100 mL. Thus, instead of filtering 100 mL per membrane, 50-mL portions may be filtered through each of two membranes, 25-mL portions may be filtered through each of four membranes, etc. Total the coliform counts observed on the membranes and report as number per 100 mL.

7.5.3 **Water of other than drinking-water quality:**

7.5.3.1 As with potable water samples, if no filter has a coliform count falling in the ideal range, total the coliform counts on all filters and report as number per 100 mL. For example, if duplicate 50-mL portions were examined and the two membranes had five and three coliform colonies, respectively, report the count as eight coliform colonies per 100 mL, i.e.,

$$\frac{(5 + 3) \times 100}{(50 + 50)}$$

7.5.3.2 Similarly, if 50-, 25-, and 10-mL portions were examined and the counts were 15, 6, and 1 coliform colonies, respectively, report the count as 25/100 mL, i.e.,

$$\frac{(15 + 6) \times 100}{(50 + 25 + 10)}$$

7.5.3.3 On the other hand, if 10-, 1.0-, and 0.1-mL portions were examined with counts of 40, 9, and 1 coliform colonies respectively, select only the 10-mL portion for calculating the coliform density because this filter had a coliform count falling in the ideal range. The result is 400/100 mL, i.e.,

$$\frac{(40 \times 100)}{10}$$

In this last example, if the membrane with 40 coliform colonies also had a total bacterial colony count greater than 200, report the coliform count as 400/100 mL.

7.5.3.4 Report confluent growth or membranes with colonies too numerous to count, as described in 7.5.2, above. Request a new sample and select more appropriate volumes for filtration.

7.5.4 **Statistical reliability of membrane filter results:** Although the statistical reliability of the membrane filter technique is greater than that of the MPN procedure, membrane counts really are not absolute numbers. Table 1 illustrates some 95% confidence limits.

TABLE 1. 95% CONFIDENCE LIMITS FOR MEMBRANE-FILTER RESULTS USING 100-mL SAMPLE

Number of Coliform Colonies Counted	95% Confidence Limits	
	Lower	Upper
1	0.05	3.0
2	0.35	4.7
3	0.81	6.3
4	1.4	7.7
5	2.0	9.2

8.0 QUALITY CONTROL

8.1 Extensive quality control procedures are provided in Part IV of U.S. EPA, 1978 (see Section 10.0, References). These procedures should be adhered to at all times.

8.2 Samples must be maintained as closely as possible to original condition by careful handling and storage. Sample sites and sampling frequency should provide data representative of characteristics and variability of the water quality at that site. Samples should be analyzed immediately. If this is not practical, they should be refrigerated at a temperature of 1-4°C and analyzed within 6 hr.

8.3 Quality control of culture media is critical to the validity of microbiological analysis. Some important factors to consider are summarized below:

8.3.1 Order media to last for only 1 yr; always use oldest stock first. Maintain an inventory of all media ordered, including a visual inspection record.

8.3.2 Hold unopened media for no longer than 2 yr. Opened media containers should be discarded after 6 mo.

8.3.3 When preparing media, keep containers open as briefly as possible. Prepare media in deionized or distilled (Type II) water of proven quality. Check the pH of the media after solution and sterilization; it should be within 0.2 units of the stated value. Discard and remake if it is not.

8.3.4 Autoclave media for the minimal time specified by the manufacturer, because the potential for damage increases with increased exposure to heat. Remove sterile media from the autoclave as soon as pressure is zero. Effectiveness of the sterilization should be checked weekly, using strips or ampuls of Bacillus stearothemophelus.

8.3.5 Agar plates should be kept slightly open for 15 min after pouring or removal from refrigeration to evaporate free moisture. Plates must be free of lumps, uneven surfaces, pock marks, or bubbles, which can prevent good contact between the agar and medium.

8.3.6 Quality control checks of prepared media should include the incubation of 5% of each batch of medium for 2 days at 35°C to inspect for growth and positive/negative checks with pure culture.

8.4 Analytical quality control procedures should include:

8.4.1 Duplicate analytical runs on at least 10% of all known positive samples analyzed.

8.4.2 At least one positive control sample should be run each month for each parameter tested.

8.4.3 At least one negative (sterile) control should be run with each series of samples using buffered water and the medium batch used at the beginning of the test series and following every tenth sample. When sterile controls indicate contamination, new samples should be obtained and analyzed.

8.4.4 The Type II water used should be periodically checked for contamination.

8.5 Quality control specifications for membrane filters:

8.5.1 Membrane filters can be purchased sterile or packaged for sterilization. They can be sterilized by autoclaving, ethylene oxide, or irradiation. Membrane manufacturers should certify that their membranes meet stated specifications on sterility, retention, recovery, pore size, flow rate, pH, total acidity, phosphate, and other extractables.

8.5.2 Membrane performance should be tested to ensure proper results. Each lot ordered should be inspected for proper shape, grid lines, diffusability, and correct colony development. Membranes containing sizable areas with no colony development are questionable.

9.0 METHOD PERFORMANCE

9.1 No data provided.

10.0 REFERENCES

1. Standard Methods for the Examination of Water and Wastewater, 15th ed.

2. Bordner, R.H., et al., Microbiological Methods for Monitoring the Environment, Environmental Monitoring and Support Laboratory, U.S. EPA, Cincinnati, OH, EPA-600/8-78-017, 1978.

METHOD 9132

TOTAL COLIFORM: MEMBRANE FILTER TECHNIQUE

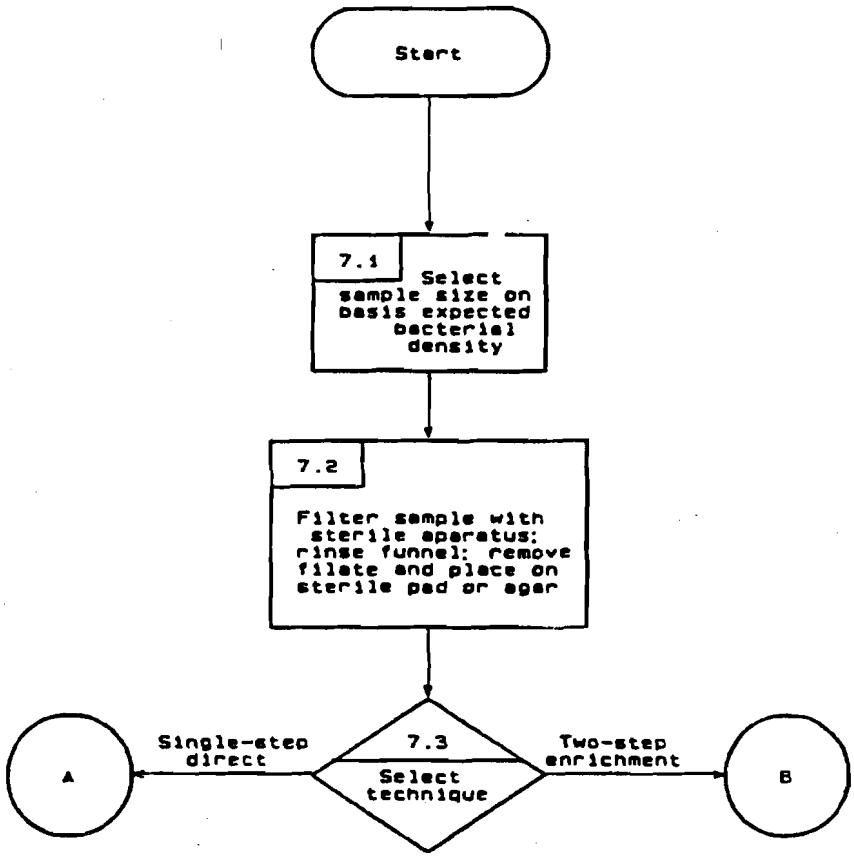

Revision 0
Date September 1986

TOTAL COLIFORM: MEMBRANE FILTER TECHNIQUE
(Continued)

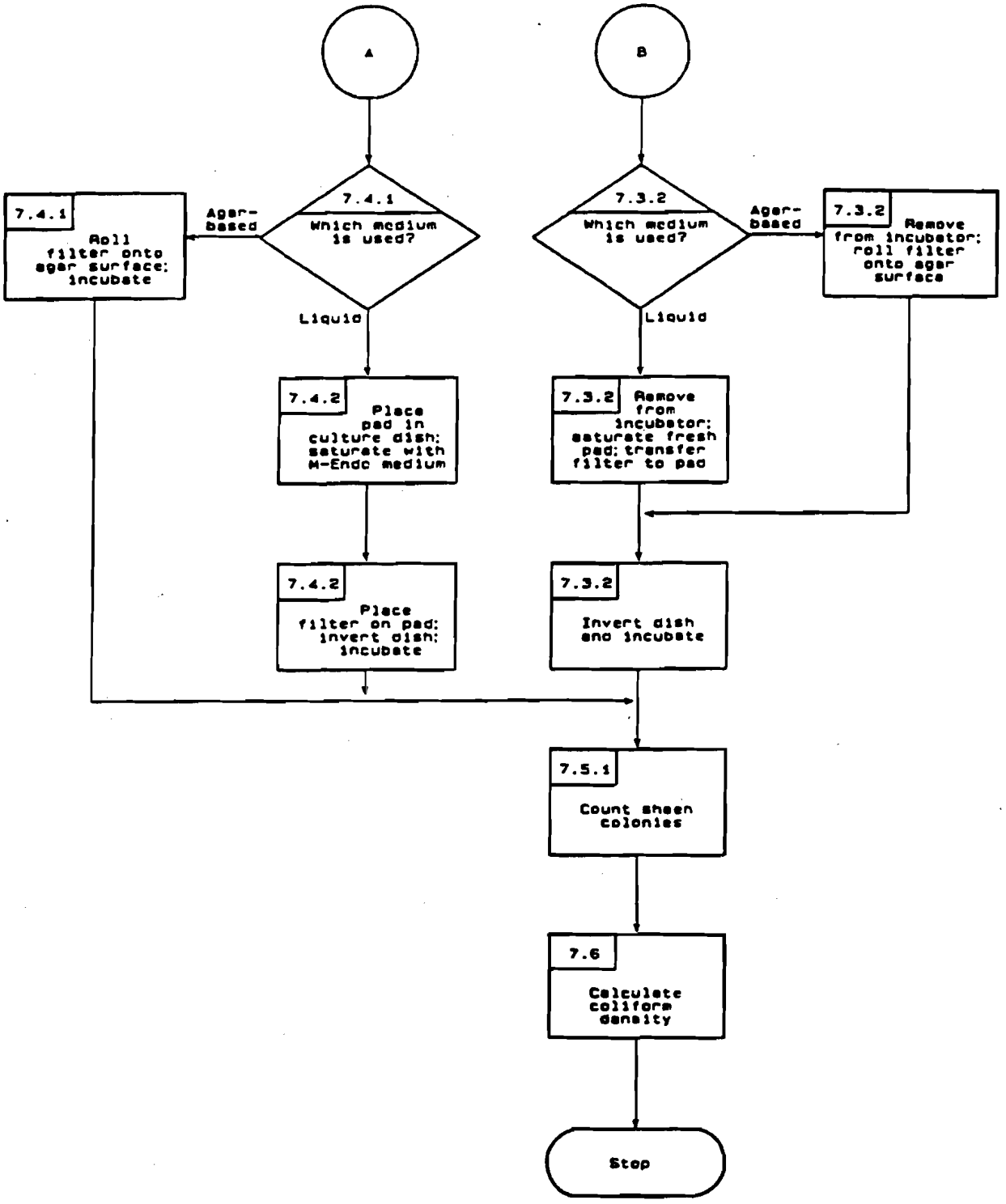

METHOD 9200

NITRATE

1.0 SCOPE AND APPLICATION

1.1 This method is applicable to the analysis of ground water, drinking, surface, and saline waters, and domestic and industrial wastes. Modification can be made to remove or correct for turbidity, color, salinity, or dissolved organic compounds in the sample.

1.2 The applicable range of concentration is 0.1 to 2 mg NO_3-N per liter of sample.

2.0 SUMMARY OF METHOD

2.1 This method is based upon the reaction of the nitrate ion with brucine sulfate in a 13 N H_2SO_4 solution at a temperature of 100°C. The color of the resulting complex is measured at 410 nm. Temperature control of the color reaction is extremely critical.

3.0 INTERFERENCES

3.1 Dissolved organic matter will cause an off color in 13 N H_2SO_4 and must be compensated for by additions of all reagents except the brucine-sulfanilic acid reagent. This also applies to natural color, not due to dissolved organics, that is present.

3.2 If the sample is colored or if the conditions of the test cause extraneous coloration, this interference should be corrected by running a concurrent sample under the same conditions but in the absence of the brucine-sulfanilic acid reagent.

3.3 Strong oxidizing or reducing agents cause interference. The presence of oxidizing agents may be determined by a residual chlorine test; reducing agents may be detected with potassium permanganate.

3.3.1 Oxidizing agents' interference is eliminated by the addition of sodium arsenite.

3.3.2 Reducing agents may be oxidized by addition of H_2O_2.

3.4 Ferrous and ferric iron and quadrivalent manganese give slight positive interferences, but in concentrations less than 1 mg/L these are negligible.

3.5 Uneven heating of the samples and standards during the reaction time will result in erratic values. The necessity for absolute control of temperature during the critical color development period cannot be too strongly emphasized.

4.0 APPARATUS AND MATERIALS

4.1 Spectrophotometer or filter photometer suitable for measuring absorbance at 410 nm.

4.2 Sufficient number of 40- to 50-mL glass sample tubes for reagent blanks, standards, and samples.

4.3 Neoprene-coated wire racks to hold sample tubes.

4.4 Water bath suitable for use at 100°C. This bath should contain a stirring mechanism so that all tubes are at the same temperature and should be of sufficient capacity to accept the required number of tubes without a significant drop in temperature when the tubes are immersed.

4.5 Water bath suitable for use at 10-15°C.

5.0 REAGENTS

5.1 ASTM Type II water (ASTM D1193): Water should be monitored for impurities.

5.2 Sodium chloride solution (30%): Dissolve 300 g NaCl in Type II water and dilute to 1 liter.

5.3 Sulfuric acid solution: Carefully add 500 mL concentrated H_2SO_4 to 125 mL Type II water. Cool and keep tightly stoppered to prevent absorption of atmospheric moisture.

5.4 Brucine-sulfanilic acid reagent: Dissolve 1 g brucine sulfate -- $(C_{23}H_{26}N_2O_4)_2 \cdot H_2SO_4 \cdot 7H_2O$ -- and 0.1 g sulfanilic acid ($NH_2C_6H_4SO_3H \cdot H_2O$) in 70 mL hot Type II water. Add 3 mL concentrated HCl, cool, mix, and dilute to 100 mL with Type II water. Store in a dark bottle at 5°C. This solution is stable for several months; the pink color that develops slowly does not affect its usefulness. Mark bottle with warning, "CAUTION: Brucine Sulfate is toxic; do not ingest."

5.5 Potassium nitrate stock solution (1.0 mL = 0.1 mg NO_3-N): Dissolve 0.7218 g anhydrous potassium nitrate (KNO_3) in Type II water and dilute to 1 liter in a volumetric flask. Preserve with 2 mL chloroform per liter. This solution is stable for at least 6 mon.

5.6 Potassium nitrate standard solution (1.0 mL = 0.001 mg NO_3-N): Dilute 10.0 mL of the stock solution (5.5) to 1 liter in a volumetric flask. This standard solution should be prepared fresh weekly.

5.7 Acetic acid (1+3): Dilute 1 volume glacial acetic acid (CH_3COOH) with 3 volumes of Type II water.

5.8 Sodium hydroxide (1 N): Dissolve 40 g of NaOH in Type II water. Cool and dilute to 1 liter.

6.0 SAMPLE COLLECTION, PRESERVATION, AND HANDLING

6.1 All samples must have been collected using a sampling plan that addresses the considerations discussed in Chapter Nine of this manual.

6.2 Analysis should be done as soon as possible. If analysis can be done within 24 hr, the sample should be preserved by refrigeration at 4°C. When samples must be stored for more than 24 hr, they should be preserved with sulfuric acid (2 mL/L concentrated H_2SO_4) and refrigerated.

7.0 PROCEDURE

7.1 Adjust the pH of the samples to approximately 7 with acetic acid (Paragraph 5.7) or sodium hydroxide (Paragraph 5.8). If necessary, filter to remove turbidity. Sulfuric acid can be used in place of acetic acid, if preferred.

7.2 Set up the required number of sample tubes in the rack to handle reagent blank, standards, and samples. Space tubes evenly throughout the rack to allow for even flow of bath water between the tubes. This should assist in achieving uniform heating of all tubes.

7.3 If it is necessary to correct for color or dissolved organic matter which will cause color on heating, run a set of duplicate samples to which all reagents, except the brucine-sulfanilic acid, have been added.

7.3.1 Add 0.5 mL brucine-sulfanilic acid reagent (Paragraph 5.4) to each tube (except the interference control tubes) and carefully mix by swirling; then place the rack of tubes in the 100°C water bath for exactly 25 min.

CAUTION: Immersion of the tube rack into the bath should not decrease the temperature of the bath by more than 1-2°C. In order to keep this temperature decrease to an absolute minimum, flow of bath water between the tubes should not be restricted by crowding too many tubes into the rack. If color development in the standards reveals discrepancies in the procedure, the operator should repeat the procedure after reviewing the temperature control steps.

7.4 Pipet 10.0 mL of standards and samples or an aliquot of the samples diluted to 10.0 mL into the sample tubes.

7.5 If the samples are saline, add 2 mL of the 30% sodium chloride solution (Paragraph 5.2) to the reagent blank, standards, and samples. For freshwater samples, sodium chloride solution may be omitted. Mix contents of tubes by swirling and place rack in cold-water bath (0-10°C).

7.6 Pipet 10.0 mL of sulfuric acid solution (Paragraph 5.3) into each tube and mix by swirling. Allow tubes to come to thermal equilibrium in the cold bath. Be sure that temperatures have equilibrated in all tubes before continuing.

7.7 Remove rack of tubes from the hot-water bath, immerse in the cold-water bath, and allow to reach thermal equilibrium (20-25°C).

7.8 Read absorbance against the reagent blank at 410 nm using a 1-cm or longer cell.

7.9 Calculation:

7.9.1 Obtain a standard curve by plotting the absorbance of standards run by the above procedure against mg/L NO_3-N. (The color reaction does not always follow Beer's law.)

7.9.2 Subtract the absorbance of the sample without the brucine-sulfanilic reagent from the absorbance of the sample containing brucine-sulfanilic acid and determine mg/L NO_3-N. Multiply by an appropriate dilution factor if less than 10 mL of sample is taken.

8.0 QUALITY CONTROL

8.1 All quality control data should be maintained and available for easy reference or inspection.

8.2 Linear calibration curves must be composed of a minimum of a blank and five standards. A set of standards must be included with each batch of samples.

8.3 Dilute samples if they are more concentrated than the highest standard or if they fall on the plateau of a calibration curve.

8.4 Verify calibration with an independently prepared check standard every 15 samples.

8.5 Run one spike duplicate sample for every 10 samples. A duplicate sample is a sample brought through the whole sample preparation and analytical process.

9.0 METHOD PERFORMANCE

9.1 Twenty-seven analysts in fifteen laboratories analyzed natural-water samples containing exact increments of inorganic nitrate, with the following results:

Increment as Nitrogen, Nitrate (mg/L N)	Precision as Standard Deviation (mg/L N)	Accuracy as Bias (%)	Bias (mg/L N)
0.16	0.092	-6.79	-0.01
0.19	0.083	+8.30	+0.02
1.08	0.245	+4.12	+0.04
1.24	0.214	+2.82	+0.04

10.0 REFERENCES

1. Annual Book of ASTM Standards, Part 31, "Water," Standard D992-71, p. 363 (1976).

2. Jenkins, D. and L. Medsken, "A Brucine Method for the Determination of Nitrate in Ocean, Estuarine, and Fresh Water," Anal.Chem., 36, p. 610 (1964).

3. Standard Methods for the Examination of Water and Wastewater, 14th ed., p. 427, Method 419D (1975).

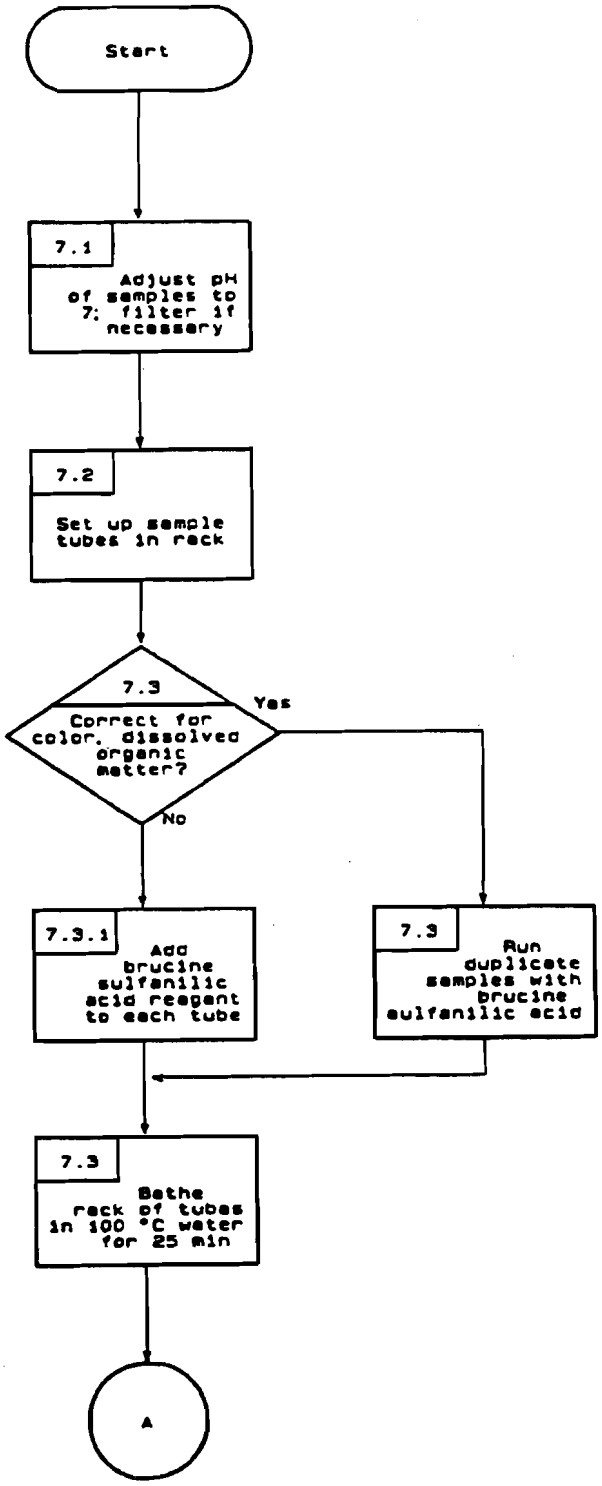
Start
7.1
Adjust pH of samples to 7; filter if necessary
7.2
Set up sample tubes in rack
7.3
Correct for color, dissolved organic matter?
Yes
No
7.3.1
Add brucine sulfanilic acid reagent to each tube
7.3
Run duplicate samples with brucine sulfanilic acid
7.3
Bathe rack of tubes in 100 °C water for 25 min
A

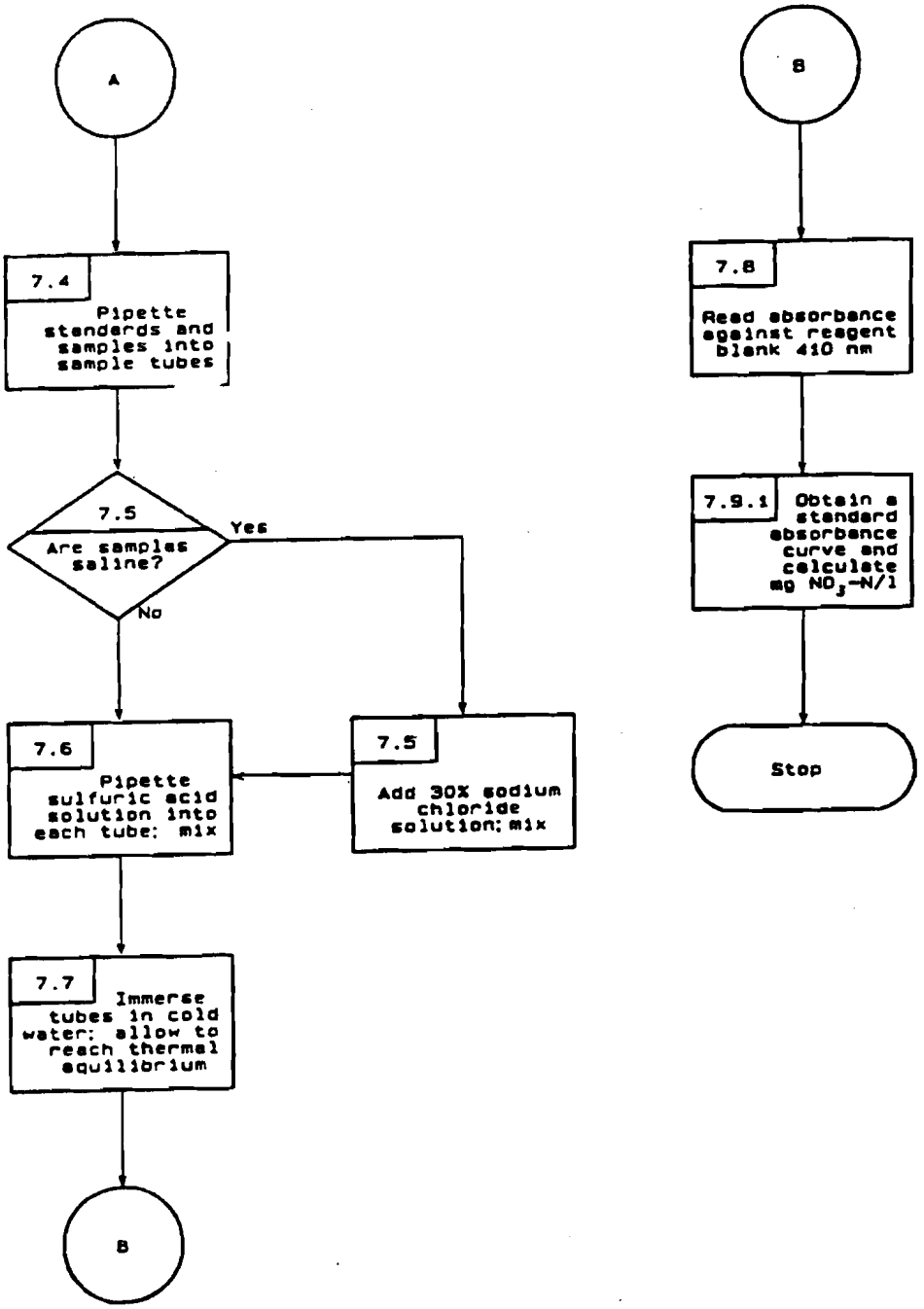
A
7.4
Pipette standards and samples into sample tubes
7.5
Are samples saline?
Yes
No
7.6
Pipette sulfuric acid solution into each tube; mix
7.5
Add 30% sodium chloride solution; mix
7.7
Immerse tubes in cold water; allow to reach thermal equilibrium
B
B
7.8
Read absorbance against reagent blank 410 nm
7.9.1
Obtain a standard absorbance curve and calculate mg NO_3-N/l
Stop

METHOD 9250

CHLORIDE (COLORIMETRIC, AUTOMATED FERRICYANIDE AAI)

1.0 SCOPE AND APPLICATION

1.1 This automated method is applicable to ground water, drinking, surface, and saline waters, and domestic and industrial wastes. The applicable range is 1 to 250 mg Cl per liter of sample.

2.0 SUMMARY OF METHOD

2.1 Thiocyanate ion (SCN) is liberated from mercuric thiocyanate through sequestration of mercury by chloride ion to form un-ionized mercuric chloride. In the presence of ferric ion, the liberated SCN forms highly colored ferric thiocyanate in a concentration proportional to the original chloride concentration.

3.0 INTERFERENCES

3.1 No significant interferences.

4.0 APPARATUS AND MATERIALS

4.1 Automated continuous-flow analytical instrument:

4.1.1 Sampler I.

4.1.2 Continuous filter.

4.1.3 Manifold.

4.1.4 Proportioning pump.

4.1.5 Colorimeter: equipped with 15-mm tubular flowcell and 480-nm filters.

4.1.6 Recorder.

5.0 REAGENTS

5.1 ASTM Type II water (ASTM D1193): Water should be monitored for impurities.

5.2 Ferric ammonium sulfate: Dissolve 60 g of $FeNH_4(SO_4)_2 \cdot 12H_2O$ in approximately 500 mL Type II water. Add 355 mL of concentrated HNO_3 and dilute to 1 liter with Type II water. Filter.

5.3 Saturated mercuric thiocyanate: Dissolve 5 g of $Hg(SCN)_2$ in 1 liter of Type II water. Decant and filter a portion of the saturated supernatant liquid to use as the reagent and refill the bottle with distilled water.

5.4 Sodium chloride stock solution (0.0141 N NaCl): Dissolve 0.8241 g of pre-dried (140°C) NaCl in Type II water. Dilute to 1 liter in a volumetric flask (1 mL = 0.5 mg Cl).

5.4.1 Prepare a series of standards by diluting suitable volumes of stock solution to 100.0 mL with Type II water. The following dilutions are suggested:

Stock Solution (mL)	Concentration (mg/L)
1.0	5.0
2.0	10.0
4.0	20.0
8.0	40.0
15.0	75.0
20.0	100.0
30.0	150.0
40.0	200.0
50.0	250.0

Choose three of the nine standard concentrations in such a way that the chosen standards will bracket the expected concentration range of the sample.

6.0 SAMPLE COLLECTION, PRESERVATION, AND HANDLING

6.1 All samples must have been collected using a sampling plan that addresses the considerations discussed in Chapter Nine of this manual.

6.2 No special requirements for preservation.

7.0 PROCEDURE

7.1 No advance sample preparation is required. Set up manifold, as shown in Figure 1. For water samples known to be consistently low in chloride content, it is advisable to use only one Type II water intake line.

7.2 Allow both colorimeter and recorder to warm up for 30 min. Run a baseline with all reagents, feeding Type II water through the sample line. Adjust dark current and operative opening on colorimeter to obtain stable baseline.

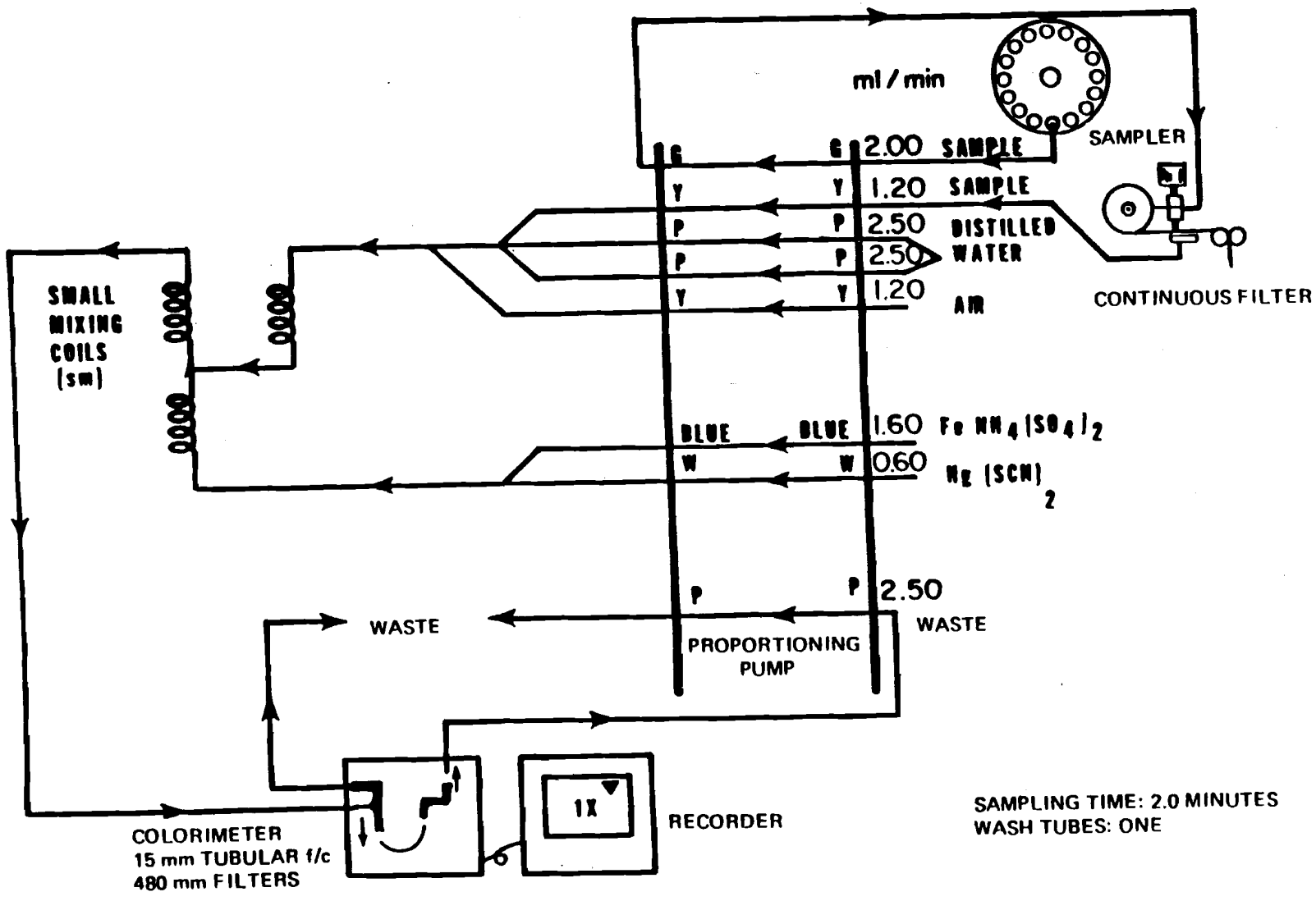

FIGURE 1. CHLORIDE MANIFOLD AA-I

7.3 Place Type II water wash tubes in alternate openings in sampler and set sample timing at 2.0 min.

7.4 Place working standards in sampler in order of decreasing concentrations. Complete filling of sampler tray with unknown samples.

7.5 Switch sample line from Type II water to sampler and begin analysis.

7.6 Calculation:

7.6.1 Prepare standard curve by plotting peak heights of processed standards against known concentrations. Compute concentration of samples by comparing sample peak heights with standard curve.

8.0 QUALITY CONTROL

8.1 All quality control data should be maintained and available for easy reference or inspection.

8.2 Calibration curves must be composed of a minimum of a blank and three standards. Employ a minimum of one blank per sample batch to determine if contamination has occurred.

8.3 Dilute samples if they are more concentrated than the highest standard or if they fall on the plateau of a calibration curve.

8.4 Verify calibration with an independently prepared check standard every 15 samples.

8.5 Run one spike duplicate sample for every 10 samples. A duplicate sample is a sample brought through the whole sample preparation and analytical process.

9.0 METHOD PERFORMANCE

9.1 Precision and accuracy data are available in Method 325.1 of Methods for Chemical Analysis of Water and Wastes.

10.0 REFERENCES

1. O'Brien, J.E., "Automatic Analysis of Chlorides in Sewage," Waste Engr., 33, 670-672 (Dec. 1962).

2. Standard Methods for the Examination of Water and Wastewater, 14th ed., p. 613, Method 602 (1975).

METHOD 9250

CHLORIDE (COLORIMETRIC, AUTOMATED FERRICYANIDE AAI)

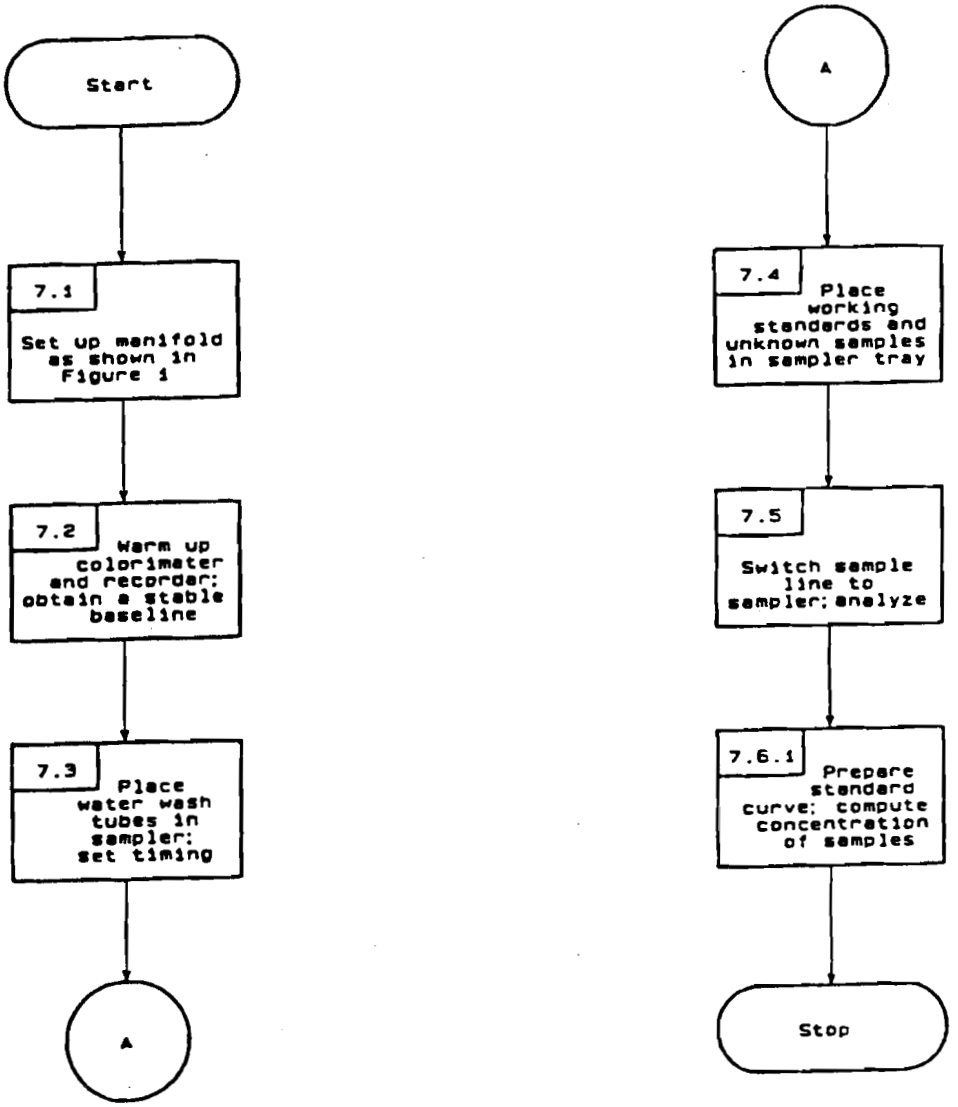

Revision 0
Date September 1986

METHOD 9251

CHLORIDE (COLORIMETRIC, AUTOMATED FERRICYANIDE AAII)

1.0 SCOPE AND APPLICATION

1.1 This automated method is applicable to ground water, drinking, surface, and saline waters, and domestic and industrial wastes. The applicable range is 1-200 mg Cl^- per liter of sample.

2.0 SUMMARY OF METHOD

2.1 Thiocyanate ion (SCN) is liberated from mercuric thiocyanate through sequestration of mercury by chloride ion to form un-ionized mercuric chloride. In the presence of ferric ion, the liberated SCN forms highly colored ferric thiocyanate in a concentration proportional to the original chloride concentration.

3.0 INTERFERENCES

3.1 No significant interferences.

4.0 APPARATUS AND MATERIALS

4.1 Automated continuous-flow analytical instrument:

4.1.1 Sampler I.

4.1.2 Analytical cartridge.

4.1.3 Proportioning pump.

4.1.4 Colorimeter: Equipped with 15-mm tubular flowcell and 480-nm filters.

4.1.5 Recorder.

4.1.6 Digital printer (optional).

5.0 REAGENTS

5.1 ASTM Type II water (ASTM D1193): Water should be monitored for impurities.

5.2 Mercuric thiocyanate solution: Dissolve 4.17 g of $Hg(SCN)_2$ in 500 mL methanol. Dilute to 1 liter with methanol, mix, and filter through filter paper.

5.3 Ferric nitrate solution, 20.2%: Dissolve 202 g of $Fe(NO_3)_3 \cdot 9H_2O$ in 500 mL of Type II water. Add 31.5 mL concentrated nitric acid, mix, and dilute to 1 liter with Type II water.

5.4 Color reagent: Add 150 mL of mercuric thiocyanate solution (Paragraph 5.2) to 150 mL of ferric nitrate solution (Paragraph 5.3), mix, and dilute to 1 liter with Type II water. A combined color reagent is commercially available.

5.5 Sodium chloride stock solution (0.0141 N NaCl): Dissolve 0.8241 g of pre-dried (140°C) NaCl in Type II water. Dilute to 1 liter in a volumetric flask (1 mL = 0.5 mg Cl^-).

5.5.1 Prepare a series of standards by diluting suitable volumes of stock solution to 100.0 mL with Type II water. The following dilutions are suggested:

Stock Solution (mL)	Concentration (mg/L)
1.0	5.0
2.0	10.0
4.0	20.0
8.0	40.0
15.0	75.0
20.0	100.0
30.0	150.0
40.0	200.0

Choose three of the nine standard concentrations in such a way that the chosen standards will bracket the expected concentration range of the sample.

6.0 SAMPLE COLLECTION, PRESERVATION, AND HANDLING

6.1 All samples must have been collected using a sampling plan that addresses the considerations discussed in Chapter Nine of this manual.

6.2 No special requirements for preservation.

7.0 PROCEDURE

7.1 When particulate matter is present, the sample must be filtered prior to the determination. The sample may be centrifuged in place of filtration. Set up the manifold, as shown in Figure 1.

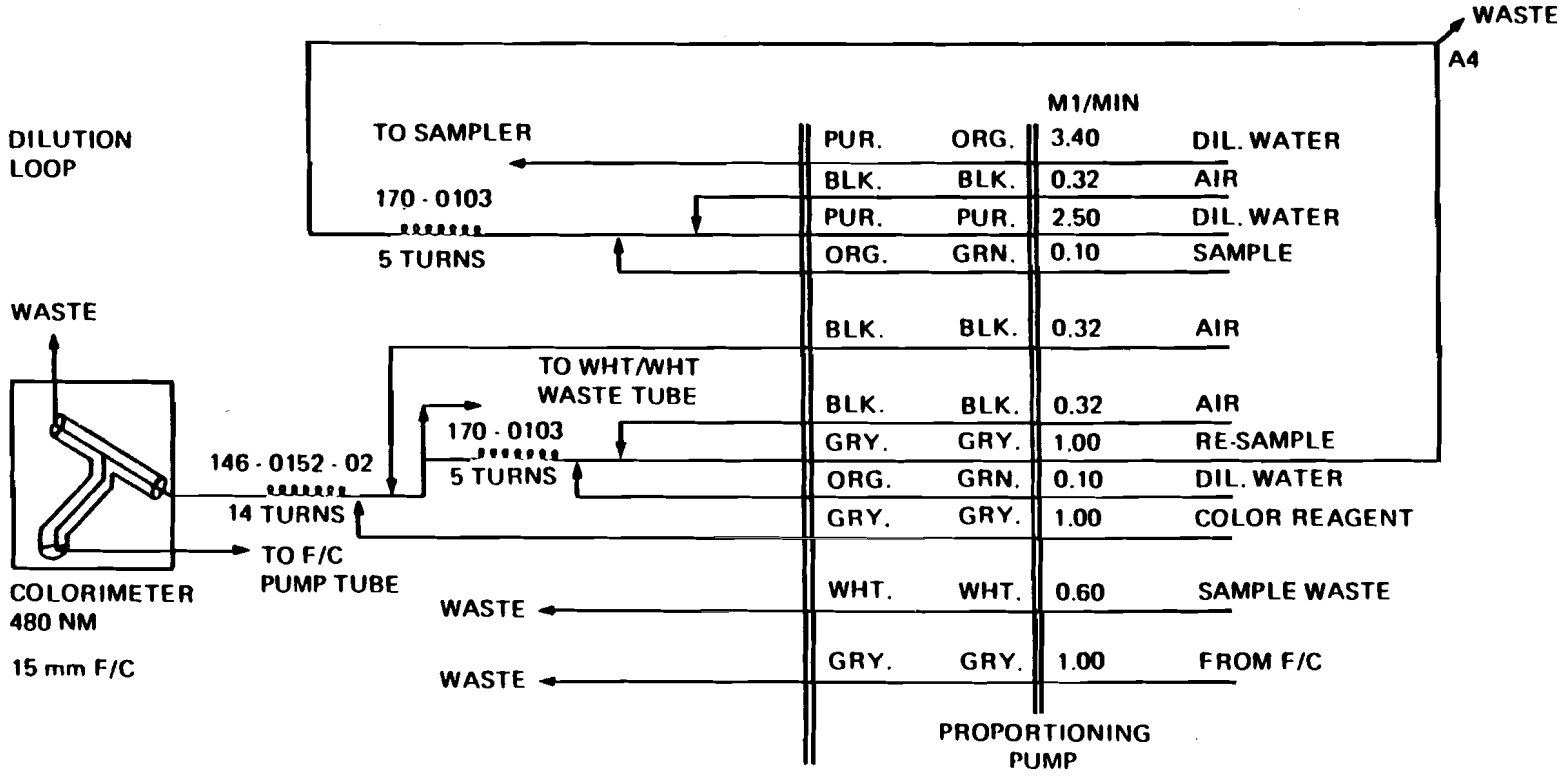

Figure 1. Chloride Manifold AA II 0-200 mg C1/L.

7.2 Allow both colorimeter and recorder to warm up for 30 min. Run a baseline with all reagents, feeding Type II water through the sample line.

7.3 Place working standards in sampler in order of decreasing concentrations. Complete filling of sampler tray with unknown samples.

7.4 When a stable baseline has been obtained, start the sampler.

7.5 Calculation: Prepare standard curve by plotting peak heights of processed standards against known concentrations. Compute concentration of samples by comparing sample peak heights with standard curve. Note that this is not a linear curve, but a second order curve. (See Paragraph 8.2.)

8.0 QUALITY CONTROL

8.1 All quality control data should be maintained and available for easy reference or inspection.

8.2 Calibration curves must be composed of a minimum of a blank and three standards. Employ a minimum of one blank per sample batch to determine if contamination has occurred.

8.3 Dilute samples if they are more concentrated than the highest standard or if they fall on the plateau of a calibration curve.

8.4 Verify calibration with an independently prepared check standard every 15 samples.

8.5 Run one spike duplicate sample for every 10 samples. A duplicate sample is a sample brought through the whole sample preparation and analytical process.

9.0 METHOD PERFORMANCE

9.1 Precision and accuracy data are not available at this time.

10.0 REFERENCES

1. O'Brien, J.E., "Automatic Analysis of Chlorides in Sewage," Waste Engr., 33, 670-672 (Dec. 1962).

2. Technicon AutoAnalyzer II, Industrial Method No. 99-70W, Technicon Industrial Systems, Tarrytown, New York, 10591 (Sept. 1973).

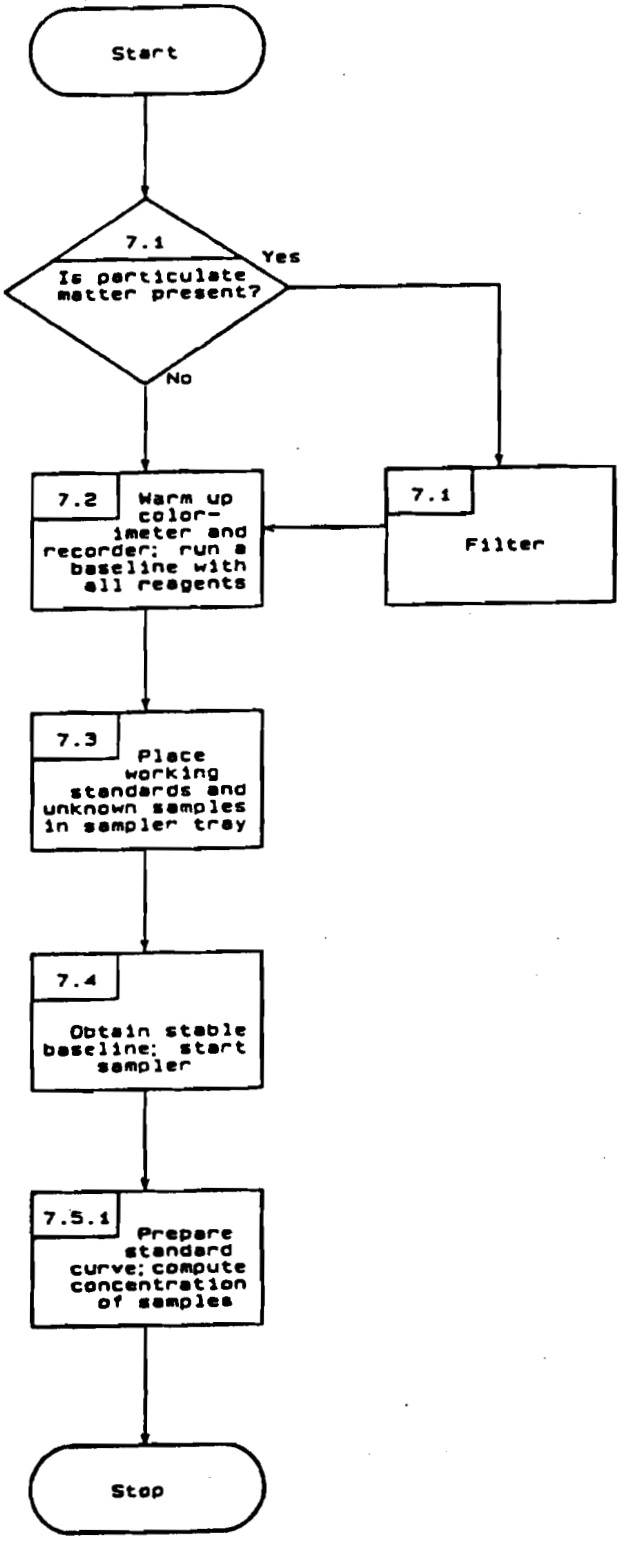
Start
7.1
Is particulate matter present?
Yes
No
7.2
Warm up color-imeter and recorder; run a baseline with all reagents
7.1
Filter
7.3
Place working standards and unknown samples in sampler tray
7.4
Obtain stable baseline; start sampler
7.5.1
Prepare standard curve; compute concentration of samples
Stop

METHOD 9252A

CHLORIDE (TITRIMETRIC, MERCURIC NITRATE)

1.0 SCOPE AND APPLICATION

1.1 This method is applicable to ground water, drinking, surface, and saline waters, and domestic and industrial wastes.

1.2 The method is suitable for all concentration ranges of chloride content; however, in order to avoid large titration volume, a sample aliquot containing not more than 10 to 20 mg Cl^- per 50 mL is used.

1.3 Automated titration may be used.

2.0 SUMMARY OF METHOD

2.1 An acidified sample is titrated with mercuric nitrate in the presence of mixed diphenylcarbazone-bromophenol blue indicator. The end point of the titration is the formation of the blue-violet mercury diphenylcarbazone complex.

3.0 INTERFERENCES

3.1 Anions and cations at concentrations normally found in surface waters do not interfere. However, at the higher concentration often found in certain wastes, problems may occur.

3.2 Sulfite interference can be eliminated by oxidizing the 50 mL of sample solution with 0.5-1 mL of H_2O_2.

3.3 Bromide and iodide are also titrated with mercuric nitrate in the same manner as chloride.

3.4 Ferric and chromate ions interfere when present in excess of 10 mg/L.

4.0 APPARATUS AND MATERIALS

4.1 Standard laboratory titrimetric equipment, including 1 mL or 5 mL microburet with 0.01 mL gradations.

4.2 Class A volumetric flasks: 1 L and 100 mL.

4.3 pH Indicator paper.

4.4 Analytical balance: capable of weighing to 0.0001 g.

5.0 REAGENTS

5.1 Reagent-grade chemicals shall be used in all tests. Unless otherwise indicated, it is intended that all reagents shall conform to the

specifications of the Committee on Analytical Reagents of the American Chemical Society, where such specifications are available. Other grades may be used, provided it is first ascertained that the reagent is of sufficiently high purity to permit its use without lessening the accuracy of the determination.

5.2 Reagent water. All references to water in this method refer to reagent water, as defined in Chapter One.

5.3 Standard sodium chloride solution, 0.025 N: Dissolve 1.4613 g $\pm$ 0.0002 g of sodium chloride (dried at 600°C for 1 hr) in chloride-free water in a 1 liter Class A volumetric flask and dilute to the mark with reagent water.

5.4 Nitric acid (HNO_3) solution: Add 3.0 mL concentrated nitric acid to 997 mL of reagent water ("3 + 997" solution).

5.5 Sodium hydroxide (NaOH) solution (10 g/L): Dissolve approximately 10 g of NaOH in reagent water and dilute to 1 L with reagent water.

5.6 Hydrogen peroxide (H_2O_2): 30%.

5.7 Hydroquinone solution (10 g/L): Dissolve 1 g of purified hydroquinone in reagent water in a 100 mL Class A volumetric flask and dilute to the mark.

5.8 Mercuric nitrate titrant (0.141 N): Dissolve 24.2 g $Hg(NO_3)_2 \bullet H_2O$ in 900 mL of reagent water acidified with 5.0 mL concentrated HNO_3 in a 1 liter volumetric flask and dilute to the mark with reagent water. Filter, if necessary. Standardize against standard sodium chloride solution (Step 5.3) using the procedures outlined in Sec. 7.0. Adjust to exactly 0.141 N and check. Store in a dark bottle. A 1.00 mL aliquot is equivalent to 5.00 mg of chloride.

5.9 Mercuric nitrate titrant (0.025 N): Dissolve 4.2830 g $Hg(NO_3)_2 \bullet H_2O$ in 50 mL of reagent water acidified with 0.05 mL of concentrated HNO_3 (sp. gr. 1.42) in a 1 liter volumetric flask and dilute to the mark with reagent water. Filter, if necessary. Standardize against standard sodium chloride solution (Sec. 5.3) using the procedures outlined in Sec. 7.0. Adjust to exactly 0.025 N and check. Store in a dark bottle.

5.10 Mercuric nitrate titrant (0.0141 N): Dissolve 2.4200 g $Hg(NO_3)_2 \bullet H_2O$ in 25 mL of reagent water acidified with 0.25 mL of concentrated HNO_3 (sp. gr. 1.42) in a 1 liter Class A volumetric flask and dilute to the mark with reagent water. Filter, if necessary. Standardize against standard sodium chloride solution (Sec. 5.3) using the procedures outlined in Sec. 7.0. Adjust to exactly 0.0141 N and check. Store in a dark bottle. A 1 mL aliquot is equivalent to 500 μg of chloride.

5.11 Mixed indicator reagent: Dissolve 0.5 g crystalline diphenylcarbazone and 0.05 g bromophenol blue powder in 75 mL 95% ethanol in a 100 mL Class A volumetric flask and dilute to the mark with 95% ethanol. Store in brown bottle and discard after 6 months.

5.12 Alphazurine indicator solution: Dissolve 0.005 g of alphazurine blue-green dye in 95% ethanol or isopropanol in 100 mL Class A volumetric flask and dilute to the mark with 95% ethanol or isopropanol.

6.0 SAMPLE COLLECTION, PRESERVATION, AND HANDLING

6.1 All samples must have been collected using a sampling plan that addresses the considerations discussed in Chapter Nine of this manual.

6.2 There are no special requirements for preservation.

7.0 PROCEDURE

7.1 Place 50 mL of sample in a vessel for titration. If the concentration is greater than 20 mg/L chloride, use 0.141 N mercuric nitrate titrant (Sec. 5.8) in Sec. 7.6, or dilute sample with reagent water. If the concentration is less than 2.5 mg/L of chloride, use 0.0141 N mercuric nitrate titrant (Sec. 5.10) in Sec. 7.6. Using a 1 mL or 5 mL microburet, determine an indicator blank on 50 mL chloride-free water using Sec. 7.6. If the concentration is less than 0.1 mg/L of chloride, concentrate an appropriate volume to 50 mL.

7.2 Add 5 to 10 drops of mixed indicator reagent (Sec. 5.11); shake or swirl solution.

7.3 If a blue-violet or red color appears, add HNO_3 solution (Sec. 5.4) dropwise until the color changes to yellow. Proceed to Sec. 7.5.

7.4 If a yellow or orange color forms immediately on addition of the mixed indicator, add NaOH solution (Sec. 5.5) dropwise until the color changes to blue-violet; then add HNO_3 solution (Sec. 5.4) dropwise until the color changes to yellow.

7.5 Add 1 mL excess HNO_3 solution (Sec. 5.4).

7.6 Titrate with 0.025 N mercuric nitrate titrant (Sec. 5.9) until a blue-violet color persists throughout the solution. If volume of titrant exceeds 10 mL or is less than 1 mL, use the 0.141 N or 0.0141 N mercuric nitrate solutions, respectively. If necessary, take a small sample aliquot. Alphazurine indicator solution (Sec. 5.12) may be added with the indicator to sharpen the end point. This will change color shades. Practice runs should be made.

> Note: The use of indicator modifications and the presence of heavy metal ions can change solution colors without affecting the accuracy of the determination. For example, solutions containing alphazurine may be bright blue when neutral, grayish purple when basic, blue-green when acidic, and blue-violet at the chloride end point. Solutions containing about 100 mg/L nickel ion and normal mixed indicator are purple when neutral, green when acidic, and gray at the chloride end point. When applying this method to samples that contain colored ions or that require modified indicator, it is recommended that the operator become familiar with the specific color changes involved by experimenting with solutions prepared as standards for comparison of color effects.

7.6.1 If chromate is present at <100 mg/L and iron is not present, add 5-10 drops of alphazurine indicator solution (Sec. 5.12) and acidify to a pH of 3 (indicating paper). End point will then be an olive-purple color.

7.6.2 If chromate is present at >100 mg/L and iron is not present, add 2 mL of fresh hydroquinone solution (Sec. 5.7).

7.6.3 If ferric ion is present use a volume containing no more than 2.5 mg of ferric ion or ferric ion plus chromate ion. Add 2 mL fresh hydroquinone solution (Sec. 5.7).

7.6.4 If sulfite ion is present, add 0.5 mL of H_2O_2 solution (Sec. 5.6) to a 50 mL sample and mix for 1 min.

7.7 Calculation:

$$\text{mg chloride/liter} = \frac{(A - B)N \times 35{,}450}{\text{mL of sample}}$$

where:

A = mL titrant for sample;

B = mL titrant for blank; and

N = normality of mercuric nitrate titrant.

8.0 QUALITY CONTROL

8.1 All quality control data should be maintained and available for easy reference or inspection. Refer to Chapter One for specific quality control guidelines.

8.2 Analyze a standard reference material to ensure that correct procedures are being followed and that all standard reagents have been prepared properly.

8.3 Employ a minimum of one blank per analytical batch or twenty samples, whichever is more frequent, to determine if contamination has occurred.

8.4 Run one matrix spike and matrix duplicate every analytical batch or twenty samples, whichever is more frequent. Matrix spikes and duplicates are brought through the whole sample preparation and analytical process.

9.0 METHOD PERFORMANCE

9.1 Water samples--A total of 42 analysts in 18 laboratories analyzed synthetic water samples containing exact increments of chloride, with the results shown in Table 1. In a single laboratory, using surface water samples at an average concentration of 34 mg Cl^-/L, the standard deviation was $\pm$1.0. A

synthetic unknown sample containing 241 mg/L chloride, 108 mg/L Ca, 82 mg/L Mg, 3.1 mg/L K, 19.9 mg/L Na, 1.1 mg/L nitrate N, 0.25 mg/L nitrate N, 259 mg/L sulfate and 42.5 mg/L total alkalinity (contributed by $NaHCO_3$) in reagent water was analyzed in 10 laboratories by the mercurimetric method, with a relative standard deviation of 3.3% and a relative error of 2.9%.

9.2 Oil combustates--These data are based on 34 data points obtained by five laboratories who each analyzed four used crankcase oils and three fuel oil blends with crankcase oil in duplicate. The samples were combusted using Method 5050. A data point represents one duplicate analysis of a sample. One data point was judged to be an outlier and was not included in these results.

9.2.1 Precision and bias.

9.2.1.1 Precision. The precision of the method as determined by the statistical examination of interlaboratory test results is as follows:

Repeatability - The difference between successive results obtained by the same operator with the same apparatus under constant operating conditions on identical test material would exceed, in the long run, in the normal and correct operation of the test method, the following values only in 1 case in 20 (see Table 2):

$$Repeatability = 7.61\sqrt{x}*$$

*where x is the average of two results in μg/g.

Reproducibility - The difference between two single and independent results obtained by different operators working in different laboratories on identical test material would exceed, in the long run, the following values only in 1 case in 20:

$$Reproducibility = 20.02\sqrt{x}*$$

*where x is the average value of two results in μg/g.

9.2.1.2 Bias. The bias of this method varies with concentration, as shown in Table 3:

Bias = Amount found - Amount expected

10.0 REFERENCES

1. Annual Book of ASTM Standards, Part 31, "Water," Standard D512-67, Method A, p. 270 (1976).

2. Standard Methods for the Examination of Water and Wastewater, 15th ed., (1980).

3. U.S. Environmental Protection Agency, Methods for Chemical Analysis of Water and Wastes, EPA 600/4-79-020 (1983), Method 325.3.

TABLE 1. ANALYSES OF SYNTHETIC WATER SAMPLES FOR CHLORIDE BY MERCURIC NITRATE METHOD

Increment as Chloride (mg/L)	Precision as Standard Deviation (mg/L)	Accuracy as Bias (%)	Accuracy as Bias (mg/L)
17	1.54	+2.16	+0.4
18	1.32	+3.50	+0.6
91	2.92	+0.11	+0.1
97	3.16	-0.51	-0.5
382	11.70	-0.61	-2.3
398	11.80	-1.19	-4.7

TABLE 2. REPEATABILITY AND REPRODUCIBILITY FOR CHLORINE IN USED OILS BY BOMB OXIDATION AND MERCURIC NITRATE TITRATION

Average value, µg/g	Repeatability, µg/g	Reproducibility, µg/g
500	170	448
1,000	241	633
1,500	295	775
2,000	340	895
2,500	381	1,001
3,000	417	1,097

TABLE 3. RECOVERY AND BIAS DATA FOR CHLORINE IN USED OILS BY BOMB OXIDATION AND MERCURIC NITRATE TITRATION

Amount expected, µg/g	Amount found, µg/g	Bias, µg/g	Percent bias
320	460	140	+44
480	578	98	+20
920	968	48	+ 5
1,498	1,664	166	+11
1,527	1,515	- 12	- 1
3,029	2,809	-220	- 7
3,045	2,710	-325	-11

METHOD 9252A
CHLORIDE (TITRIMETRIC, MERCURIC NITRATE)

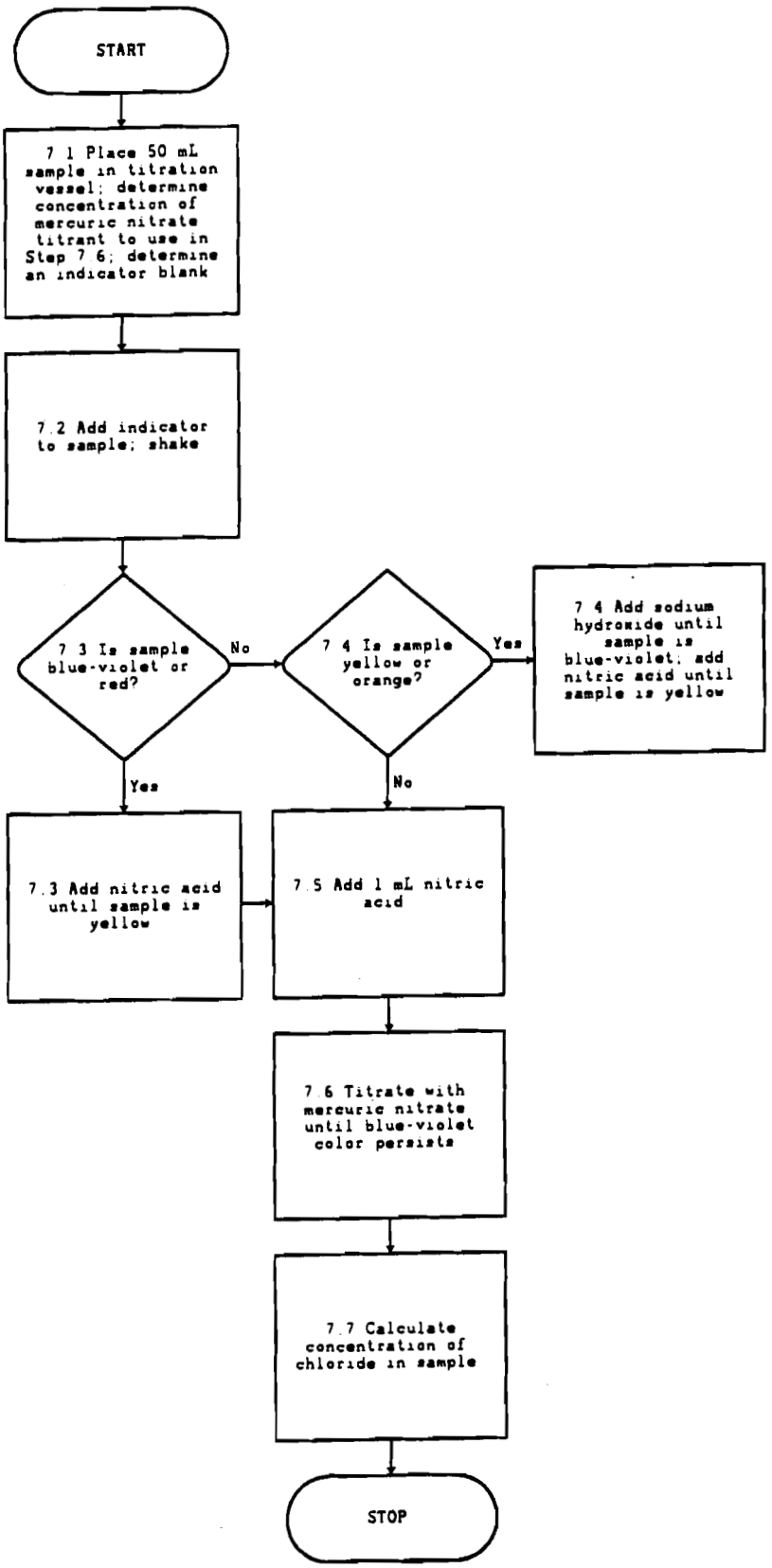

METHOD 9253

CHLORIDE (TITRIMETRIC, SILVER NITRATE)

1.0 SCOPE AND APPLICATION

1.1 This method is intended primarily for oxygen bomb combustates or other waters where the chloride content is 5 mg/L or more and where interferences such as color or high concentrations of heavy metal ions render Method 9252 impracticable.

2.0 SUMMARY OF METHOD

2.1 Water adjusted to pH 8.3 is titrated with silver nitrate solution in the presence of potassium chromate indicator. The end point is indicated by persistence of the orange-silver chromate color.

3.0 INTERFERENCES

3.1 Bromide, iodide, and sulfide are titrated along with the chloride. Orthophosphate and polyphosphate interfere if present in concentrations greater than 250 and 25 mg/L, respectively. Sulfite and objectionable color or turbidity must be eliminated. Compounds that precipitate at pH 8.3 (certain hydroxides) may cause error by occlusion.

3.2 Residual sodium carbonate from the bomb combustion may react with silver nitrate to produce the precipitate, silver carbonate. This competitive reaction may interfere with the visual detection of the end point. To remove carbonate from the test solution, add small quantities of sulfuric acid followed by agitation.

4.0 APPARATUS AND MATERIALS

4.1 Standard laboratory titrimetric equipment, including 1 mL or 5 mL microburet with 0.01 mL gradations, and 25 mL buret.

4.2 Analytical balance: capable of weighing to 0.0001 g.

4.3 Class A volumetric flask: 1 L.

5.0 REAGENTS

5.1 Reagent grade chemicals shall be used in all tests. Unless otherwise indicated, it is intended that all reagents shall conform to the specifications of the Committee on Analytical Reagents of the American Chemical Society, where such specifications are available. Other grades may be used, provided it is first ascertained that the reagent is of sufficiently high purity to permit its use without lessening the accuracy of the determination.

5.2 Reagent water. All references to water in this method refer to reagent water, as defined in Chapter One.

5.3 Hydrogen peroxide (30%), H_2O_2.

5.4 Phenolphthalein indicator solution (10 g/L).

5.5 Potassium chromate indicator solution. Dissolve 50 g of potassium chromate (K_2CrO_4) in 100 mL of reagent water and add silver nitrate ($AgNO_3$) until a slightly red precipitate is produced. Allow the solution to stand, protected from light, for at least 24 hours after the addition of $AgNO_3$. Then filter the solution to remove the precipitate and dilute to 1 L with reagent water.

5.6 Silver nitrate solution, standard (0.025N). Crush approximately 5 g of silver nitrate ($AgNO_3$) crystals and dry to constant weight at 40°C. Dissolve 4.2473 ± 0.0002 g of the crushed, dried crystals in reagent water and dilute to 1 L with reagent water. Standardize against the standard NaCl solution, using the procedure given in Section 7.0.

5.7 Sodium chloride solution, standard (0.025N). Dissolve 1.4613 g ± 0.0002 g of sodium chloride (dried at 600°C for 1 hr) in chloride-free water in a 1 liter Class A volumetric flask and dilute to the mark with reagent water.

5.8 Sodium hydroxide solution (0.25N). Dissolve approximately 10 g of NaOH in reagent water and dilute to 1 L with reagent water.

5.9 Sulfuric acid (1:19), H_2SO_4. Carefully add 1 volume of concentrated sulfuric acid to 19 volumes of reagent water, while mixing.

6.0 SAMPLE COLLECTION, PRESERVATION, AND HANDLING

6.1 All samples must have been collected using a sampling plan that addresses the considerations discussed in Chapter Nine of this manual.

6.2 There are no special requirements for preservation.

7.0 PROCEDURE

7.1 Pour 50 mL or less of the sample, containing between 0.25 mg and 20 mg of chloride ion, into a white porcelain container. Dilute to approximately 50 mL with reagent water, if necessary. Adjust the pH to the phenolphthalein end point (pH 8.3) using H_2SO_4 (Sec. 5.9) or NaOH solution (Sec. 5.8).

7.2 Add approximately 1.0 mL of K_2CrO_4 indicator solution and mix. Add standard $AgNO_3$ solution dropwise from a 25 mL buret until the orange color persists throughout the sample when illuminated with a yellow light or viewed with yellow goggles. Be consistent with endpoint recognition.

7.3 Repeat the procedure described in Secs. 7.1 and 7.2 using exactly one-half as much original sample, diluted to 50 mL with halide-free water.

7.4 If sulfite ion is present, add 0.5 mL of H_2O_2 to the samples described in Secs. 7.2 and 7.3 and mix for 1 minute. Adjust the pH, then proceed as described in Secs. 7.2 and 7.3.

7.5 Calculation

7.5.1 Calculate the chloride ion concentration in the original sample, in milligrams per liter, as follows:

$$\text{Chloride (mg/L)} = [(V_1 - V_2) \times N \times 71{,}000] / S$$

where:

V_1 = Milliliters of standard $AgNO_3$ solution added in titrating the sample prepared in Sec. 7.1.

V_2 = Milliliters of standard $AgNO_3$ solution added in titrating the sample prepared in Sec. 7.3.

N = Normality of standard $AgNO_3$ solution.

S = Milliliters of original sample in the 50 mL test sample prepared in Sec. 7.1.

71,000 = 2 x 35,500 mg Cl^-/equivalent, since $V_1 \sim 2V_2$.

8.0 QUALITY CONTROL

8.1 All quality control data should be maintained and available for easy reference or inspection. Refer to Chapter One for specific quality control guidelines.

8.2 Analyze a standard reference material to ensure that correct procedures are being followed and that all standard reagents have been prepared properly.

8.3 Employ a minimum of one blank per analytical batch or twenty samples, whichever is more frequent, to determine if contamination has occurred.

8.4 Run one matrix spike and matrix duplicate every analytical batch or twenty samples, whichever is more frequent. Matrix spikes and duplicates are brought through the whole sample preparation and analytical process.

9.0 METHOD PERFORMANCE

9.1 These data are based on 32 data points obtained by five laboratories who each analyzed four used crankcase oils and three fuel oil blends with crankcase in duplicate. The samples were combusted using Method 5050. A data point represents one duplicate analysis of a sample. Three data points were judged to be outliers and were not included in these results.

9.1.1 Precision. The precision of the method as determined by the statistical examination of inter-laboratory test results is as follows:

Repeatability - The difference between successive results obtained by the same operator with the same apparatus under constant operating conditions on identical test material would exceed, in the long run, in the normal and correct operation of the test method, the following values only in 1 case in 20 (see Table 1):

$$Repeatability = 0.36\ x*$$

*where x is the average of two results in µg/g.

Reproducibility - The difference between two single and independent results obtained by different operators working in different laboratories on identical test material would exceed, in the long run, the following values only in 1 case in 20:

$$Reproducibility = 0.71\ x*$$

*where x is the average of two results in µg/g.

9.1.2 Bias. The bias of this method varies with concentration, as shown in Table 2:

Bias = Amount found - Amount expected

10.0 REFERENCES

1. Rohrbough, W.G.; et al. Reagent Chemicals, American Chemical Society Specifications, 7th ed.; American Chemical Society: Washington, DC, 1986.

2. 1985 Annual Book of ASTM Standards, Vol. 11.01; "Standard Specification for Reagent Water"; ASTM: Philadelphia, PA, 1985; D1193-77.

3. Gaskill, A.; Estes, E. D.; Hardison, D. L.; and Myers, L. E. "Validation of Methods for Determining Chlorine in Used Oils and Oil Fuels," Prepared for U.S. Environmental Protection Agency, Office of Solid Waste. EPA Contract No. 68-01-7075, WA 80. July 1988.

TABLE 1.
REPEATABILITY AND REPRODUCIBILITY FOR CHLORINE IN USED OILS BY BOMB OXIDATION AND SILVER NITRATE TITRATION

Average value (µg/g)	Repeatability (µg/g)	Reproducibility (µg/g)
500	180	355
1,000	360	710
1,500	540	1,065
2,000	720	1,420
2,500	900	1,775
3,000	1,080	2,130

TABLE 2.
RECOVERY AND BIAS DATA FOR CHLORINE IN USED OILS BY BOMB OXIDATION AND SILVER NITRATE TITRATION

Amount expected (µg/g)	Amount found (µg/g)	Bias, (µg/g)	Percent bias
320	645	325	+102
480	665	185	+39
920	855	-65	-7
1,498	1,515	17	+1
1,527	1,369	-158	-10
3,029	2,570	-460	-15
3,045	2,683	-362	-12

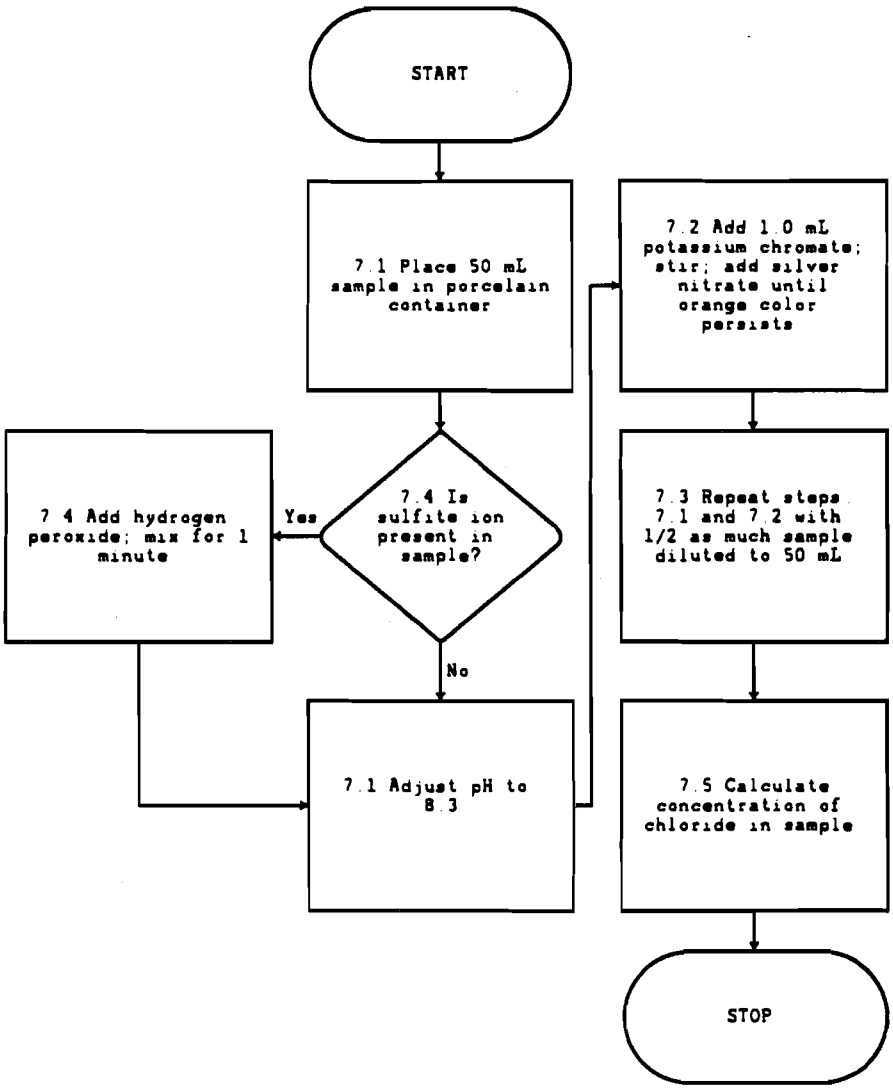
START
7.1 Place 50 mL sample in porcelain container
7.4 Is sulfite ion present in sample?
Yes
7.4 Add hydrogen peroxide; mix for 1 minute
No
7.1 Adjust pH to 8.3
7.2 Add 1.0 mL potassium chromate; stir; add silver nitrate until orange color persists
7.3 Repeat steps 7.1 and 7.2 with 1/2 as much sample diluted to 50 mL
7.5 Calculate concentration of chloride in sample
STOP

METHOD 9320

RADIUM-228

1.0 SCOPE AND APPLICATION

1.1 This method covers the measurement of radium-228 in ground water and, if desired, the determination of radium-226 on the same sample. If the level of radium-226 is above 3 pCi/L, the sample must also be measured for radium-228.

1.2 This technique is devised so that the beta activity from actinium-228, which is produced by decay of radium-228, can be determined and related to the radium-228 that is present in the sample.

1.3 To quantify actinium-228 and thus determine radium-228, the efficiency of the beta counter for measuring the very short half-lived actinium-228 (avg. beta energy of 0.404 keV) is to be calibrated with a beta source of comparable average beta energy.

2.0 SUMMARY OF METHOD

2.1 The radium in the water sample is collected by coprecipitation with barium and lead sulfate and purified by reprecipitation from EDTA solution. Both radium-226 and radium-228 are collected in this manner. After a 36-hr ingrowth of actinium-228 from radium-228, the actinium-228 is carried on yttrium oxalate, purified and beta counted. If radium-226 is also desired, the activity in the supernatant can be reserved for coprecipitation on barium sulfate, dissolving in EDTA and storing for ingrowth in a sealed radon bubbler.

3.0 INTERFERENCES

3.1 As evidenced by the results of the performance studies, the presence of strontium-90 in the water sample gives a positive bias to the radium-228 activity measured. However, strontium-90 is not likely to be found in ground water, except possibly in monitoring wells around a radioactive burial site.

3.2 Excess barium in the water sample might result in a falsely high chemical yield.

4.0 APPARATUS

4.1 Gas-flow proportional counting system (low-background beta <3 cpm).

4.2 Electric hot plate.

4.3 Centrifuge.

4.4 Membrane filters: Matricel 47-mm.

4.5 Drying lamp.

4.6 Glassware.

4.7 Stainless steel counting planchets.

4.8 Analytical balance.

5.0 REAGENTS

5.1 ASTM Type II water (ASTM D1193): Water must be monitored for impurities.

5.2 Acetic acid, 17.4 N: Glacial CH_3COOH (concentrated) sp. gr. 1.05, 99.8%.

5.3 Ammonium hydroxide, 15 N: NH_4OH (concentrated) sp gr. 0.90, 56.6%.

5.4 Ammonium oxalate, 5%: Dissolve 5g $(NH_4)_2C_2O_4 \cdot H_2O$ in Type II water and dilute to 100 mL.

5.5 Ammonium sulfate, 200 mg/mL: Dissolve 20 g $(NH_4)_2SO_4$ in Type II water and dilute to 100 mL.

5.6 Ammonium sulfide, 2%: Dilute 10 mL $(NH_4)_2S$ (20-24%), to 100 mL with Type II water.

5.7 Barium carrier, 16 mg/mL, standardized: Dissolve 2.846 g $BaCl_2 \cdot 2H_2O$ in Type II water, add 0.5 mL 16 N HNO_3, and dilute to 100 mL with Type II water.

5.8 Citric acid, 1 M: Dissolve 19.2 g $C_6H_8O_7 \cdot H_2O$ in Type II water and dilute to 100 mL.

5.9 EDTA reagent, basic (0.25 M): Dissolve 20 g NaOH in 750 mL Type II water, heat, and slowly add 93 g disodium ethylenedinitriloacetate dihydrate ($Na_2C_{10}H_{14}O_8N_2 \cdot 2H_2O$) while stirring. After the salt is in solution, filter through coarse filter paper, and dilute to 1 liter.

5.10 Lead carrier, 15 mg/mL: Dissolve 2.397 g $Pb(NO_3)_2$ in Type II water, add 0.5 mL 16 N HNO_3, and dilute to 100 mL with Type II water.

5.11 Lead carrier, 1.5 mg/mL: Dilute 10 mL lead carrier (15 mg/mL) to 100 mL with Type II water.

6.0 SAMPLE COLLECTION, PRESERVATION, AND HANDLING

6.1 All samples must have been collected in a manner which addresses the considerations discussed in Chapter Nine of this manual.

6.2 It is recommended that samples be preserved at the time of collection by adding enough 1 N HNO_3 to the sample to bring it to pH 2 (15 mL 1 N HNO_3 per liter of sample is usually sufficient). If samples are to be collected without preservation, they should be brought to the laboratory within 5 days, then preserved, and held in the original container for a minimum of 16 hr before analysis or transfer of the sample. See also Note to Paragraph 7.2 below.

6.3 The container choice should be plastic (rather than glass) to prevent loss due to breakage during transportation and handling.

7.0 PROCEDURE

7.1 Calibrations:

7.1.1 Counter efficiency: The beta counter may be calibrated with actinium-228 or strontium-89 ($t_{1/2}$ = 51 d). Strontium-89 has an average beta energy of 0.589 KeV, while the average beta energy for actinium-228 is 0.404 KeV. A standard strontium-89 tracer solution can be used to determine beta efficiencies over a range of precipitate weights on the stainless steel planchet.

7.2 For each liter of water, add 5 mL 1 M $C_6H_8O_7 \cdot H_2O$, and a few drops of methyl orange indicator. The solution should be red.

NOTE: At the time of sample collection add 2 mL 16 N HNO_3 for each liter of water.

7.3 Add 10 mL lead carrier (15 mg/mL), 2 mL strontium carrier (10 mg/mL), 2.0 mL barium carrier (16 mg/mL), and 1 mL yttrium carrier (18 mg/mL); stir well. Add 15 N NH_4OH until a definite yellow color is obtained; then add a few drops excess. Heat to incipient boiling and maintain at this temperature for 30 min.

7.4 Precipitate lead and barium sulfates by adding 18 N H_2SO_4 until the red color reappears; then add 0.25 mL excess. Add 5 mL $(NH_4)_2SO_4$ (200 mg/mL) for each liter of sample. Stir frequently and keep at a temperature of about 90°C for 30 min.

7.5 Cool slightly; then filter with suction through a 47-mm matricel membrane filter (GA6,0.45-micron pore size). Make a quantitative transfer of precipitate to the filter by rinsing last particles out of beaker with a strong jet of water.

7.6 Carefully place filter with precipitate in the bottom of a 250-mL beaker. Add about 10 mL 16 N HNO_3 and heat gently until the filter completely

dissolves. Transfer the precipitate into a polypropylene centrifuge tube with additional 16 N HNO_3. Centrifuge and discard supernatant.

7.7 Wash the precipitate with 15 mL 16 N HNO_3, centrifuge, and discard supernatant. Repeat this washing a second time.

7.8 Add 25 mL basic EDTA reagent, heat in a hot-water bath, and stir well. Add a few drops 10 N NaOH if the precipitate does not readily dissolve.

7.9 Add 1 mL strontium-yttrium mixed carrier and stir thoroughly. Add a few drops 10 N NaOH if any precipitate forms.

7.10 Add 1 mL $(NH_4)_2SO_4$ (200 mg/mL) and stir thoroughly. Add 17.4 N acetic acid until barium sulfate precipitates; then add 2 mL excess. Digest in a hot water bath until precipitate settles. Centrifuge and discard supernatant.

7.11 Add 20 mL basic EDTA reagent, heat in a hot-water bath, and stir until precipitate dissolves. Repeat steps 7.9 and 7.10. (Note time of last barium sulfate precipitation; this is the beginning of the actinium-228 ingrowth time.)

7.12 Dissolve the precipitate in 20 mL basic EDTA reagent as before; then add 1.0 mL yttrium carrier (9 mg/mL) and 1 mL lead carrier (1.5 mg/mL). If any precipitate forms, dissolve by adding a few drops 10 N NaOH. Cap the polypropylene tube and age at least 36 hr.

7.13 Add 0.3 mL $(NH_4)_2S$ and stir well. Add 10 N NaOH dropwise with vigorous stirring until lead sulfide precipitates; then add 10 drops excess. Stir intermittently for about 10 min. Centrifuge and decant supernatant into a clean tube.

7.14 Add 1 mL lead carrier (1.5 mg/mL), 0.1 mL $(NH_4)_2S$, and a few drops 10 N NaOH. Repeat precipitation of lead sulfide as before. Centrifuge and filter supernate through Whatman #42 filter paper into a clean tube. Wash filter with a few mL water. Discard residue.

7.15 Add 5 mL 18 N NaOH, stir well, and digest in a hot-water bath until yttrium hydroxide coagulates. Centrifuge and decant supernate into a beaker. Save for barium yield determination (step 7.20). (Note time of yttrium hydroxide precipitation; this is the end of the actinium-228 ingrowth time and beginning of actinium-228 decay time.)

7.16 Dissolve the precipitate in 2 mL 6 N HNO_3. Heat and stir in a hot water bath about 5 min. Add 5 mL water and reprecipitate yttrium hydroxide with 3 mL 10 N NaOH. Heat and stir in a hot water bath until precipitate coagulates. Centrifuge and add this supernate to the supernate produced in step 7.15 in order to determine barium yield.

7.17 Dissolve precipitate with 1 mL 1 N HNO_3 and heat in hot-water bath a few minutes. Dilute to 5 mL and add 2 mL 5% $(NH_4)_2C_2O_4 \cdot H_2O$. Heat to coagulate, centrifuge, and discard supernatant.

7.18 Add 10 mL water, 6 drops 1 N HNO_3 and 6 drops 5% $(NH_4)_2C_2O_4 \cdot H_2O$. Heat and stir in a hot-water bath a few minutes. Centrifuge and discard supernatant.

7.19 To determine yttrium yield, transfer quantitatively to a tared stainless steel planchet with a minimum amount of water. Dry under an infrared lamp to a constant weight and count in a low-background beta counter.

7.20 To the supernatant from step 7.15, add 4 mL 16 N HNO_3 and 2 mL $(NH_4)_2SO_4$ (200 mg/mL), stirring well after each addition. Add 17.4 N acetic acid until barium sulfate precipitates; then add 2 mL excess. Digest on a hot plate until precipitate settles. Centrifuge and discard supernatant.

7.21 Add 20 mL basic EDTA reagent, rest in a hot-water bath, and stir until precipitate dissolves. Add a few drops 10 N NaOH if precipitate does not readily dissolve.

7.22 Add 1 mL $(NH_4)_2SO_4$ (200 mg/mL) and stir thoroughly. Add 17.4 N acetic acid until barium sulfate precipitates; then add 2 mL excess. Digest in a hot-water bath until precipitate settles. Centrifuge and discard supernatant.

7.23 Wash precipitate with 10 mL water. Centrifuge and discard supernatant.

7.24 Transfer precipitate to a tared stainless steel planchet with a minimum amount of water. Dry under an infrared lamp and weigh for barium yield determination.

7.25 <u>Calculation</u>:

7.25.1 Calculate the radium-228 concentration, D, in picocuries per liter as follows:

$$D = \frac{C}{2.22 \times EVR} \times \frac{\lambda t_2}{(1-e^{-\lambda t_2})}^{*} \times \frac{1}{(1-e^{-t_3})} \times \frac{1}{e^{-t_1}}$$

---

* $\frac{\lambda t_2}{(1-e^{-\lambda t_2})}$ is a factor to correct the average count rate to the count rate at the beginning of counting time.

where:

C = Average net count rate, cpm;

E = Counter efficiency, for actinium-228, or comparable beta energy nuclide;

V = Liters of sample used;

R = Fractional chemical yield of yttrium carrier (Step 7.19) multiplied by fractional chemical yield of barrier carrier (Step 7.24);

2.22 = Conversion factor from disintegrations/minute to picocuries;

λ = The decay constant for actinium-228 (0.001884 min^{-1});

t_1 = The time interval (in min) between the first yttrium hydroxide precipitation in Step 7.15 and the start of the counting time;

t_2 = The time interval of counting in min; and

t_3 = The ingrowth time of actinium-228 in min measured from the last barium sulfate precipitation in Step 7.11 to the first yttrium hydroxide precipitation in Step 7.15.

8.0 QUALITY CONTROL

8.1 All quality control data should be maintained and available for easy reference or inspection.

8.2 Employ a minimum of one blank per sample batch to determine if contamination or any memory effects are occurring.

8.3 Run one spike duplicate sample for every 10 samples. A duplicate sample is a sample brought through the whole sample preparation and analytical process.

9.0 METHOD PERFORMANCE

9.1 No data provided.

10.0 REFERENCES

1. Greenberg, A.E., J.J. Connors, and D.J. Jenkens, eds., Standard Methods for the Examination of Water and Wastewater, 15th ed., American Public Health Assoc., Washington, D.C., Method 707, p. 600, 1980.

2. Johnson, J.O., Determination of Radium 228 in Natural Waters. Radiochemical Analysis of Water. U.S. Geol. Surv., Water Supply Paper 1696-G. U.S. Govt. Printing Office, Washington, D.C., 1971.

3. Krieger, H.L., Prescribed Procedures for Measurement of Radioactivity in Drinking Water, Environmental Monitoring and Support Laboratory, U.S. EPA, Cincinnati, OH, EPA-600/4-75-008, 1976.

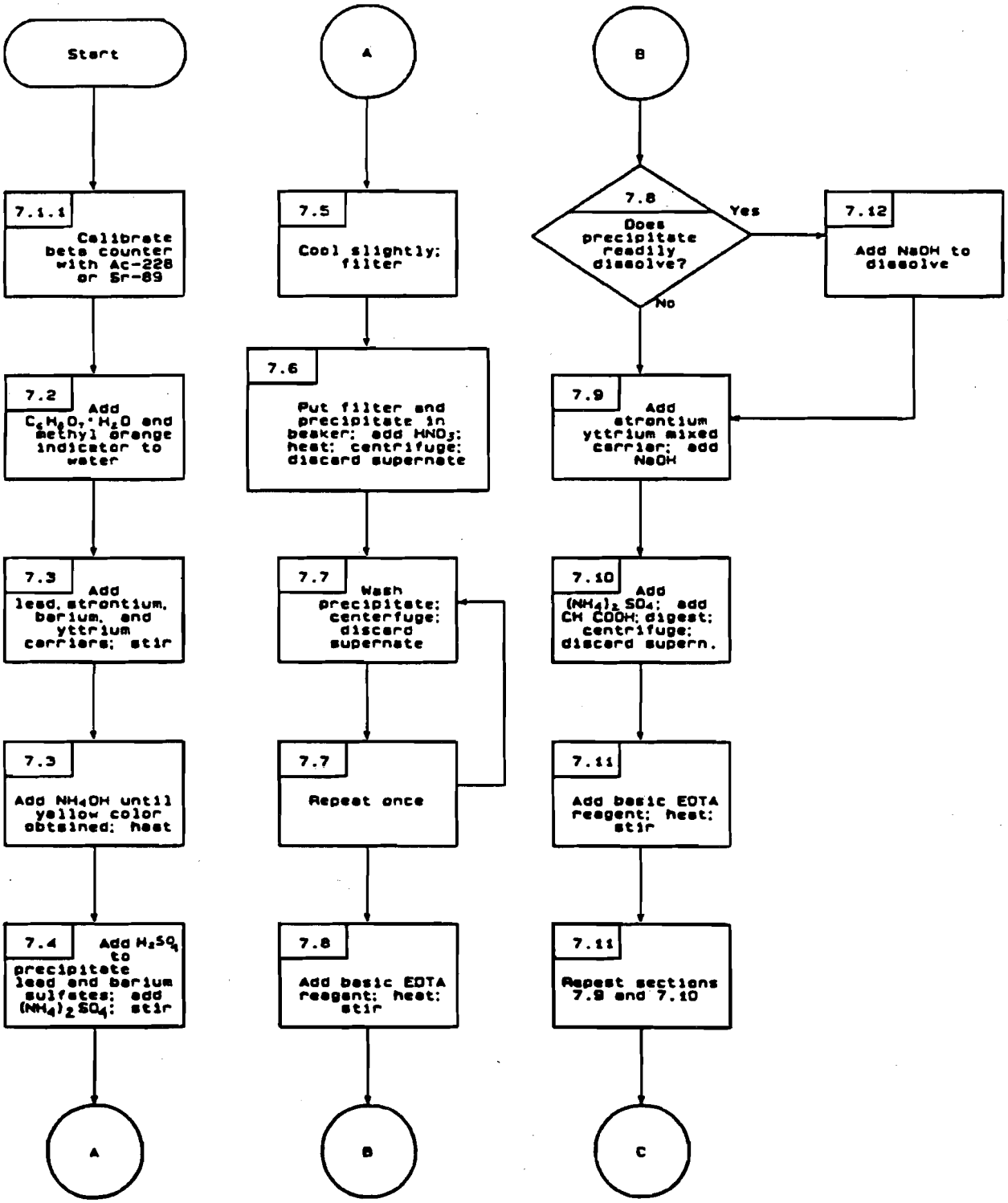
Start
7.1.1 Calibrate beta counter with Ac-228 or Sr-89
7.2 Add $C_6H_8O_7 \cdot H_2O$ and methyl orange indicator to water
7.3 Add lead, strontium, barium, and yttrium carriers; stir
7.3 Add NH_4OH until yellow color obtained; heat
7.4 Add H_2SO_4 to precipitate lead and barium sulfates; add $(NH_4)_2SO_4$; stir
A
A
7.5 Cool slightly; filter
7.6 Put filter and precipitate in beaker; add HNO_3; heat; centrifuge; discard supernate
7.7 Wash precipitate; centerfuge; discard supernate
7.7 Repeat once
7.8 Add basic EDTA reagent; heat; stir
B
B
7.8 Does precipitate readily dissolve?
Yes
No
7.12 Add NaOH to dissolve
7.9 Add strontium yttrium mixed carrier; add NaOH
7.10 Add $(NH_4)_2SO_4$; add CH_3COOH; digest; centrifuge; discard supern.
7.11 Add basic EDTA reagent; heat; stir
7.11 Repeat sections 7.9 and 7.10
C

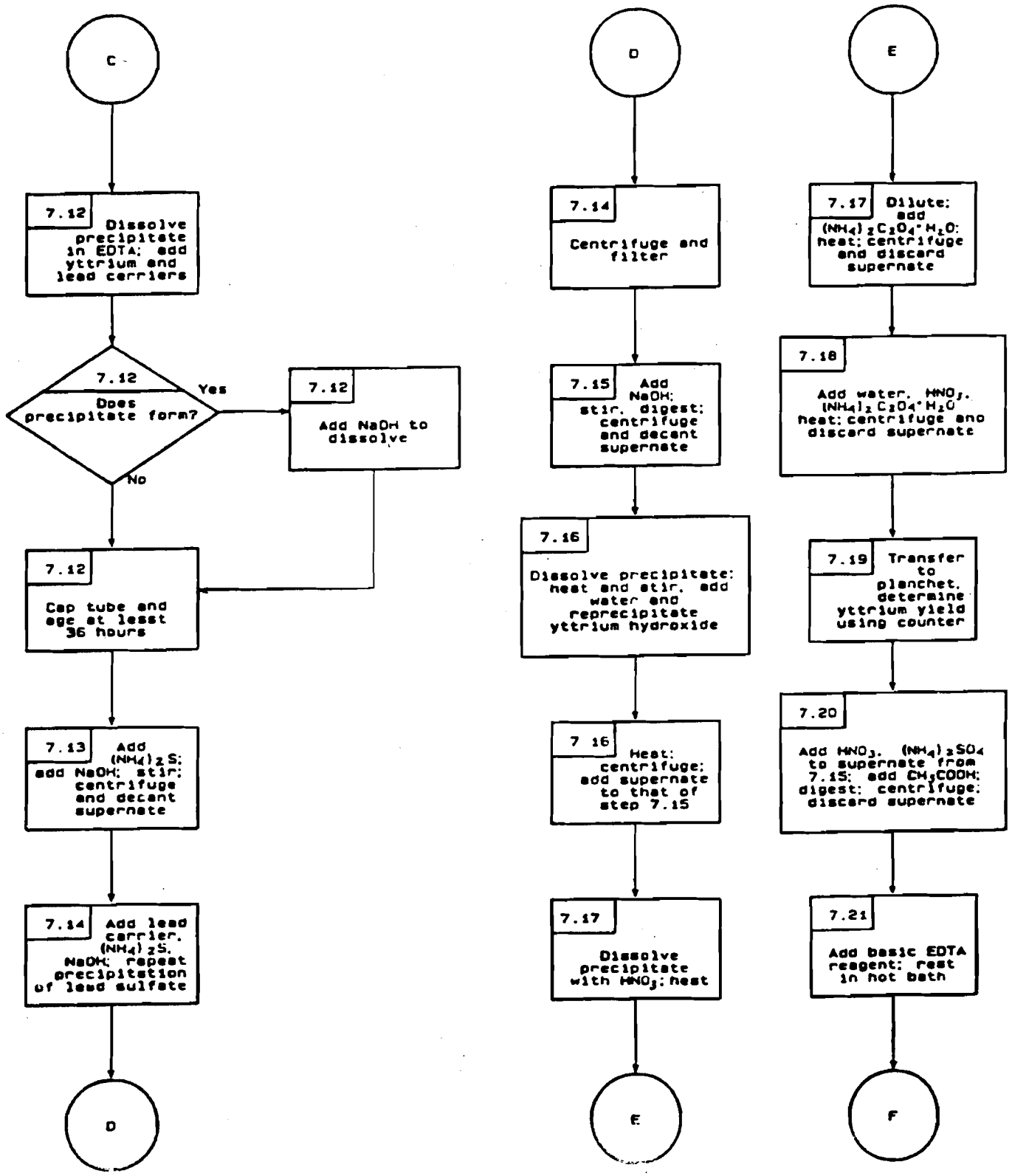
C
7.12 Dissolve precipitate in EDTA; add yttrium and lead carriers
7.12 Does precipitate form?
Yes
No
7.12 Add NaOH to dissolve
7.12 Cap tube and age at least 36 hours
7.13 Add $(NH_4)_2S$; add NaOH; stir; centrifuge and decant supernate
7.14 Add lead carrier, $(NH_4)_2S$, NaOH; repeat precipitation of lead sulfate
D
D
7.14 Centrifuge and filter
7.15 Add NaOH; stir, digest; centrifuge and decant supernate
7.16 Dissolve precipitate; heat and stir, add water and reprecipitate yttrium hydroxide
7.16 Heat; centrifuge; add supernate to that of step 7.15
7.17 Dissolve precipitate with HNO_3; heat
E
E
7.17 Dilute; add $(NH_4)_2C_2O_4 \cdot H_2O$; heat; centrifuge and discard supernate
7.18 Add water, HNO_3, $(NH_4)_2C_2O_4 \cdot H_2O$ heat; centrifuge and discard supernate
7.19 Transfer to planchet, determine yttrium yield using counter
7.20 Add HNO_3, $(NH_4)_2SO_4$ to supernate from 7.15; add CH_3COOH; digest; centrifuge; discard supernate
7.21 Add basic EDTA reagent; rest in hot bath
F

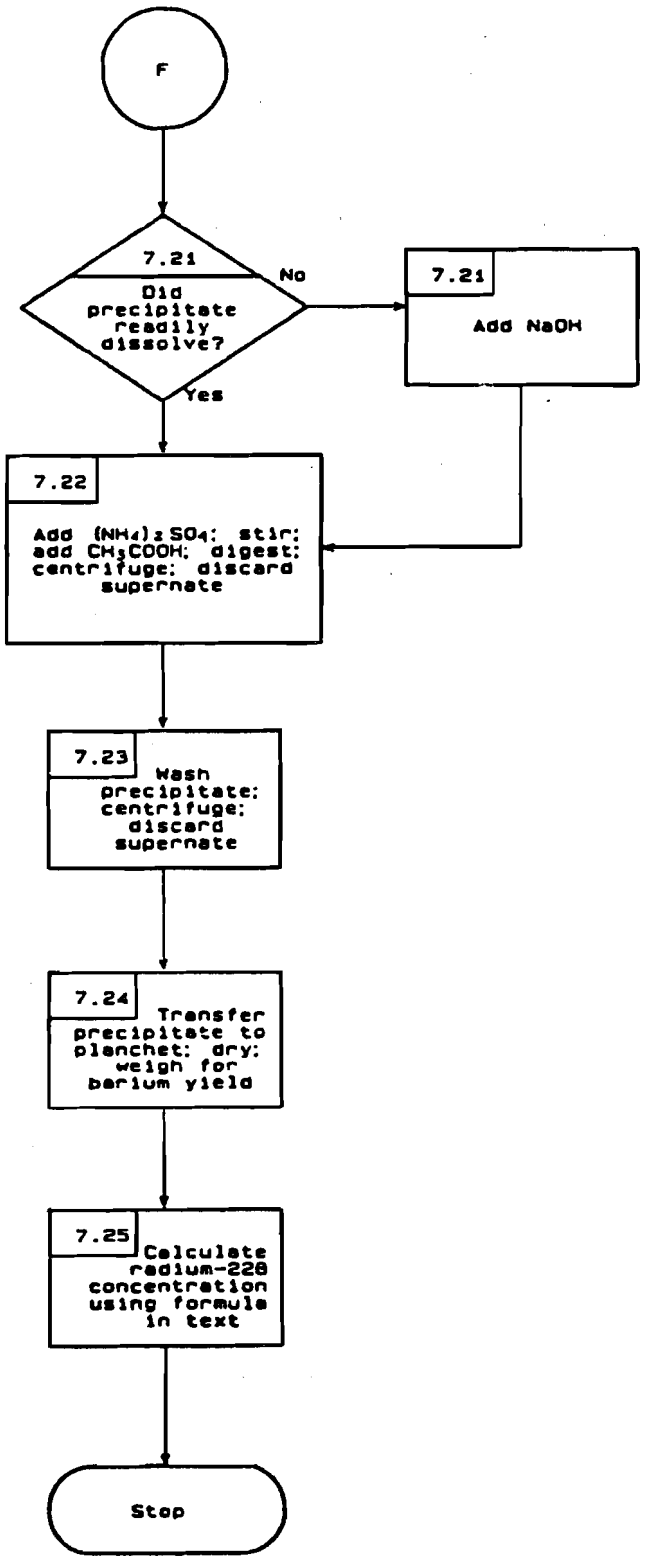
F
7.21
Did precipitate readily dissolve?
No
Yes
7.21
Add NaOH
7.22
Add $(NH_4)_2SO_4$; stir; add CH_3COOH; digest; centrifuge; discard supernate
7.23
Wash precipitate; centrifuge; discard supernate
7.24
Transfer precipitate to planchet; dry; weigh for barium yield
7.25
Calculate radium-228 concentration using formula in text
Stop

CHAPTER SIX

PROPERTIES

The following methods are found in Chapter Six:

Method 1312:	Synthetic Precipitation Leaching Procedure
Method 1320:	Multiple Extraction Procedure
Method 1330A:	Extraction Procedure for Oily Wastes
Method 9040B:	pH Electrometric Measurement
Method 9041A:	pH Paper Method
Method 9045C:	Soil and Waste pH
Method 9050:	Specific Conductance
Method 9080:	Cation-Exchange Capacity of Soils (Ammonium Acetate)
Method 9081:	Cation-Exchange Capacity of Soils (Sodium Acetate)
Method 9090A:	Compatibility Test for Wastes and Membrane Liners
Method 9095:	Paint Filter Liquids Test
Method 9096:	Liquid Release Test (LRT) Procedure
Appendix A:	Liquid Release Test Pre-Test
Method 9100:	Saturated Hydraulic Conductivity, Saturated Leachate Conductivity, and Intrinsic Permeability
Method 9310:	Gross Alpha and Gross Beta
Method 9315:	Alpha-Emitting Radium Isotopes

METHOD 1312

SYNTHETIC PRECIPITATION LEACHING PROCEDURE

1.0 SCOPE AND APPLICATION

1.1 Method 1312 is designed to determine the mobility of both organic and inorganic analytes present in liquids, soils, and wastes.

2.0 SUMMARY OF METHOD

2.1 For liquid samples (i.e., those containing less than 0.5 % dry solid material), the sample, after filtration through a 0.6 to 0.8 μm glass fiber filter, is defined as the 1312 extract.

2.2 For samples containing greater than 0.5 % solids, the liquid phase, if any, is separated from the solid phase and stored for later analysis; the particle size of the solid phase is reduced, if necessary. The solid phase is extracted with an amount of extraction fluid equal to 20 times the weight of the solid phase. The extraction fluid employed is a function of the region of the country where the sample site is located if the sample is a soil. If the sample is a waste or wastewater, the extraction fluid employed is a pH 4.2 solution. A special extractor vessel is used when testing for volatile analytes (see Table 1 for a list of volatile compounds). Following extraction, the liquid extract is separated from the solid phase by filtration through a 0.6 to 0.8 μm glass fiber filter.

2.3 If compatible (i.e., multiple phases will not form on combination), the initial liquid phase of the waste is added to the liquid extract, and these are analyzed together. If incompatible, the liquids are analyzed separately and the results are mathematically combined to yield a volume-weighted average concentration.

3.0 INTERFERENCES

3.1 Potential interferences that may be encountered during analysis are discussed in the individual analytical methods.

4.0 APPARATUS AND MATERIALS

4.1 Agitation apparatus: The agitation apparatus must be capable of rotating the extraction vessel in an end-over-end fashion (see Figure 1) at 30 ± 2 rpm. Suitable devices known to EPA are identified in Table 2.

4.2 Extraction Vessels

4.2.1 Zero Headspace Extraction Vessel (ZHE). This device is for use only when the sample is being tested for the mobility of volatile analytes (i.e., those listed in Table 1). The ZHE (depicted in Figure 2) allows for liquid/solid separation within the device and effectively precludes headspace. This type of vessel allows for initial liquid/solid separation, extraction, and final extract filtration without opening the

vessel (see Step 4.3.1). These vessels shall have an internal volume of 500-600 mL and be equipped to accommodate a 90-110 mm filter. The devices contain VITON®[1] O-rings which should be replaced frequently. Suitable ZHE devices known to EPA are identified in Table 3.

For the ZHE to be acceptable for use, the piston within the ZHE should be able to be moved with approximately 15 psig or less. If it takes more pressure to move the piston, the O-rings in the device should be replaced. If this does not solve the problem, the ZHE is unacceptable for 1312 analyses and the manufacturer should be contacted.

The ZHE should be checked for leaks after every extraction. If the device contains a built-in pressure gauge, pressurize the device to 50 psig, allow it to stand unattended for 1 hour, and recheck the pressure. If the device does not have a built-in pressure gauge, pressurize the device to 50 psig, submerge it in water, and check for the presence of air bubbles escaping from any of the fittings. If pressure is lost, check all fittings and inspect and replace O-rings, if necessary. Retest the device. If leakage problems cannot be solved, the manufacturer should be contacted.

Some ZHEs use gas pressure to actuate the ZHE piston, while others use mechanical pressure (see Table 3). Whereas the volatiles procedure (see Step 7.3) refers to pounds-per-square-inch (psig), for the mechanically actuated piston, the pressure applied is measured in torque-inch-pounds. Refer to the manufacturer's instructions as to the proper conversion.

4.2.2 Bottle Extraction Vessel. When the sample is being evaluated using the nonvolatile extraction, a jar with sufficient capacity to hold the sample and the extraction fluid is needed. Headspace is allowed in this vessel.

The extraction bottles may be constructed from various materials, depending on the analytes to be analyzed and the nature of the waste (see Step 4.3.3). It is recommended that borosilicate glass bottles be used instead of other types of glass, especially when inorganics are of concern. Plastic bottles, other than polytetrafluoroethylene, shall not be used if organics are to be investigated. Bottles are available from a number of laboratory suppliers. When this type of extraction vessel is used, the filtration device discussed in Step 4.3.2 is used for initial liquid/solid separation and final extract filtration.

4.3 Filtration Devices: It is recommended that all filtrations be performed in a hood.

4.3.1 Zero-Headspace Extraction Vessel (ZHE): When the sample is evaluated for volatiles, the zero-headspace extraction vessel described in Step 4.2.1 is used for filtration. The device shall be capable of

---

[1]VITON® is a trademark of Du Pont.

supporting and keeping in place the glass fiber filter and be able to withstand the pressure needed to accomplish separation (50 psig).

NOTE: When it is suspected that the glass fiber filter has been ruptured, an in-line glass fiber filter may be used to filter the material within the ZHE.

4.3.2 Filter Holder: When the sample is evaluated for other than volatile analytes, a filter holder capable of supporting a glass fiber filter and able to withstand the pressure needed to accomplish separation may be used. Suitable filter holders range from simple vacuum units to relatively complex systems capable of exerting pressures of up to 50 psig or more. The type of filter holder used depends on the properties of the material to be filtered (see Step 4.3.3). These devices shall have a minimum internal volume of 300 mL and be equipped to accommodate a minimum filter size of 47 mm (filter holders having an internal capacity of 1.5 L or greater, and equipped to accommodate a 142 mm diameter filter, are recommended). Vacuum filtration can only be used for wastes with low solids content (<10 %) and for highly granular, liquid-containing wastes. All other types of wastes should be filtered using positive pressure filtration. Suitable filter holders known to EPA are listed in Table 4.

4.3.3 Materials of Construction: Extraction vessels and filtration devices shall be made of inert materials which will not leach or absorb sample components of interest. Glass, polytetrafluoroethylene (PTFE), or type 316 stainless steel equipment may be used when evaluating the mobility of both organic and inorganic components. Devices made of high-density polyethylene (HDPE), polypropylene (PP), or polyvinyl chloride (PVC) may be used only when evaluating the mobility of metals. Borosilicate glass bottles are recommended for use over other types of glass bottles, especially when inorganics are analytes of concern.

4.4 Filters: Filters shall be made of borosilicate glass fiber, shall contain no binder materials, and shall have an effective pore size of 0.6 to 0.8-μm . Filters known to EPA which meet these specifications are identified in Table 5. Pre-filters must not be used. When evaluating the mobility of metals, filters shall be acid-washed prior to use by rinsing with 1N nitric acid followed by three consecutive rinses with reagent water (a minimum of 1-L per rinse is recommended). Glass fiber filters are fragile and should be handled with care.

4.5 pH Meters: The meter should be accurate to $\pm$ 0.05 units at 25°C.

4.6 ZHE Extract Collection Devices: TEDLAR®[2] bags or glass, stainless steel or PTFE gas-tight syringes are used to collect the initial liquid phase and the final extract when using the ZHE device. These devices listed are recommended for use under the following conditions:

4.6.1 If a waste contains an aqueous liquid phase or if a waste does not contain a significant amount of nonaqueous liquid (i.e., <1 % of

[2]TEDLAR® is a registered trademark of Du Pont.

total waste), the TEDLAR® bag or a 600 mL syringe should be used to collect and combine the initial liquid and solid extract.

4.6.2 If a waste contains a significant amount of nonaqueous liquid in the initial liquid phase (i.e., >1 % of total waste), the syringe or the TEDLAR® bag may be used for both the initial solid/liquid separation and the final extract filtration. However, analysts should use one or the other, not both.

4.6.3 If the waste contains no initial liquid phase (is 100 % solid) or has no significant solid phase (is <0.5% solid) , either the TEDLAR® bag or the syringe may be used. If the syringe is used, discard the first 5 mL of liquid expressed from the device. The remaining aliquots are used for analysis.

4.7 ZHE Extraction Fluid Transfer Devices: Any device capable of transferring the extraction fluid into the ZHE without changing the nature of the extraction fluid is acceptable (e.g., a positive displacement or peristaltic pump, a gas-tight syringe, pressure filtration unit (see Step 4.3.2), or other ZHE device).

4.8 Laboratory Balance: Any laboratory balance accurate to within ± 0.01 grams may be used (all weight measurements are to be within ± 0.1 grams).

4.9 Beaker or Erlenmeyer flask, glass, 500 mL.

4.10 Watchglass, appropriate diameter to cover beaker or Erlenmeyer flask.

4.11 Magnetic stirrer.

5.0 REAGENTS

5.1 Reagent grade chemicals shall be used in all tests. Unless otherwise indicated, it is intended that all reagents shall conform to the specifications of the Committee on Analytical Reagents of the American Chemical Society, where such specifications are available. Other grades may be used, provided it is first ascertained that the reagent is of sufficiently high purity to permit its use without lessening the accuracy of the determination.

5.2 Reagent Water. Reagent water is defined as water in which an interferant is not observed at or above the method's detection limit of the analyte(s) of interest. For nonvolatile extractions, ASTM Type II water or equivalent meets the definition of reagent water. For volatile extractions, it is recommended that reagent water be generated by any of the following methods. Reagent water should be monitored periodically for impurities.

5.2.1 Reagent water for volatile extractions may be generated by passing tap water through a carbon filter bed containing about 500 grams of activated carbon (Calgon Corp., Filtrasorb-300 or equivalent).

5.2.2 A water purification system (Millipore Super-Q or equivalent) may also be used to generate reagent water for volatile extractions.

5.2.3 Reagent water for volatile extractions may also be prepared by boiling water for 15 minutes. Subsequently, while maintaining the water temperature at 90 ± 5 degrees C, bubble a contaminant-free inert gas (e.g. nitrogen) through the water for 1 hour. While still hot, transfer the water to a narrow mouth screw-cap bottle under zero-headspace and seal with a Teflon-lined septum and cap.

5.3 Sulfuric acid/nitric acid (60/40 weight percent mixture) H_2SO_4/HNO_3. Cautiously mix 60 g of concentrated sulfuric acid with 40 g of concentrated nitric acid. If preferred, a more dilute H_2SO_4/HNO_3 acid mixture may be prepared and used in steps 5.4.1 and 5.4.2 making it easier to adjust the pH of the extraction fluids.

5.4 Extraction fluids.

5.4.1 Extraction fluid #1: This fluid is made by adding the 60/40 weight percent mixture of sulfuric and nitric acids (or a suitable dilution) to reagent water (Step 5.2) until the pH is 4.20 ± 0.05. The fluid is used to determine the leachability of soil from a site that is east of the Mississippi River, and the leachability of wastes and wastewaters.

NOTE: Solutions are unbuffered and exact pH may not be attained.

5.4.2 Extraction fluid #2: This fluid is made by adding the 60/40 weight percent mixture of sulfuric and nitric acids (or a suitable dilution) to reagent water (Step 5.2) until the pH is 5.00 ± 0.05. The fluid is used to determine the leachability of soil from a site that is west of the Mississippi River.

5.4.3 Extraction fluid #3: This fluid is reagent water (Step 5.2) and is used to determine cyanide and volatiles leachability.

NOTE: These extraction fluids should be monitored frequently for impurities. The pH should be checked prior to use to ensure that these fluids are made up accurately. If impurities are found or the pH is not within the above specifications, the fluid shall be discarded and fresh extraction fluid prepared.

5.5 Analytical standards shall be prepared according to the appropriate analytical method.

6.0 SAMPLE COLLECTION, PRESERVATION, AND HANDLING

6.1 All samples shall be collected using an appropriate sampling plan.

6.2 There may be requirements on the minimal size of the field sample depending upon the physical state or states of the waste and the analytes of concern. An aliquot is needed for the preliminary evaluations of the percent

solids and the particle size. An aliquot may be needed to conduct the nonvolatile analyte extraction procedure. If volatile organics are of concern, another aliquot may be needed. Quality control measures may require additional aliquots. Further, it is always wise to collect more sample just in case something goes wrong with the initial attempt to conduct the test.

6.3 Preservatives shall not be added to samples before extraction.

6.4 Samples may be refrigerated unless refrigeration results in irreversible physical change to the waste. If precipitation occurs, the entire sample (including precipitate) should be extracted.

6.5 When the sample is to be evaluated for volatile analytes, care shall be taken to minimize the loss of volatiles. Samples shall be collected and stored in a manner intended to prevent the loss of volatile analytes (e.g., samples should be collected in Teflon-lined septum capped vials and stored at 4°C. Samples should be opened only immediately prior to extraction).

6.6 1312 extracts should be prepared for analysis and analyzed as soon as possible following extraction. Extracts or portions of extracts for metallic analyte determinations must be acidified with nitric acid to a pH < 2, unless precipitation occurs (see Step 7.2.14 if precipitation occurs). Extracts should be preserved for other analytes according to the guidance given in the individual analysis methods. Extracts or portions of extracts for organic analyte determinations shall not be allowed to come into contact with the atmosphere (i.e., no headspace) to prevent losses. See Step 8.0 (Quality Control) for acceptable sample and extract holding times.

7.0 PROCEDURE

7.1 Preliminary Evaluations

Perform preliminary 1312 evaluations on a minimum 100 gram aliquot of sample. This aliquot may not actually undergo 1312 extraction. These preliminary evaluations include: (1) determination of the percent solids (Step 7.1.1); (2) determination of whether the waste contains insignificant solids and is, therefore, its own extract after filtration (Step 7.1.2); and (3) determination of whether the solid portion of the waste requires particle size reduction (Step 7.1.3).

7.1.1 Preliminary determination of percent solids: Percent solids is defined as that fraction of a waste sample (as a percentage of the total sample) from which no liquid may be forced out by an applied pressure, as described below.

7.1.1.1 If the sample will obviously yield no free liquid when subjected to pressure filtration (i.e., is 100% solid), weigh out a representative subsample (100 g minimum) and proceed to Step 7.1.3.

7.1.1.2 If the sample is liquid or multiphasic, liquid/solid separation to make a preliminary determination of percent solids is required. This involves the filtration device

discussed in Step 4.3.2, and is outlined in Steps 7.1.1.3 through 7.1.1.9.

7.1.1.3 Pre-weigh the filter and the container that will receive the filtrate.

7.1.1.4 Assemble filter holder and filter following the manufacturer's instructions. Place the filter on the support screen and secure.

7.1.1.5 Weigh out a subsample of the waste (100 gram minimum) and record the weight.

7.1.1.6 Allow slurries to stand to permit the solid phase to settle. Samples that settle slowly may be centrifuged prior to filtration. Centrifugation is to be used only as an aid to filtration. If used, the liquid should be decanted and filtered followed by filtration of the solid portion of the waste through the same filtration system.

7.1.1.7 Quantitatively transfer the sample to the filter holder (liquid and solid phases). Spread the sample evenly over the surface of the filter. If filtration of the waste at 4°C reduces the amount of expressed liquid over what would be expressed at room temperature, then allow the sample to warm up to room temperature in the device before filtering.

Gradually apply vacuum or gentle pressure of 1-10 psig, until air or pressurizing gas moves through the filter. If this point is not reached under 10 psig, and if no additional liquid has passed through the filter in any 2-minute interval, slowly increase the pressure in 10 psig increments to a maximum of 50 psig. After each incremental increase of 10 psig, if the pressurizing gas has not moved through the filter, and if no additional liquid has passed through the filter in any 2-minute interval, proceed to the next 10-psig increment. When the pressurizing gas begins to move through the filter, or when liquid flow has ceased at 50 psig (i.e., filtration does not result in any additional filtrate within any 2-minute period), stop the filtration.

NOTE: If sample material (>1 % of original sample weight) has obviously adhered to the container used to transfer the sample to the filtration apparatus, determine the weight of this residue and subtract it from the sample weight determined in Step 7.1.1.5 to determine the weight of the sample that will be filtered.

NOTE: Instantaneous application of high pressure can degrade the glass fiber filter and may cause premature plugging.

7.1.1.8 The material in the filter holder is defined as the solid phase of the sample, and the filtrate is defined as the liquid phase.

NOTE: Some samples, such as oily wastes and some paint wastes, will obviously contain some material that appears to be a liquid, but even after applying vacuum or pressure filtration, as outlined in Step 7.1.1.7, this material may not filter. If this is the case, the material within the filtration device is defined as a solid. Do not replace the original filter with a fresh filter under any circumstances. Use only one filter.

7.1.1.9 Determine the weight of the liquid phase by subtracting the weight of the filtrate container (see Step 7.1.1.3) from the total weight of the filtrate-filled container. Determine the weight of the solid phase of the sample by subtracting the weight of the liquid phase from the weight of the total sample, as determined in Step 7.1.1.5 or 7.1.1.7.

Record the weight of the liquid and solid phases. Calculate the percent solids as follows:

$$\text{Percent solids} = \frac{\text{Weight of solid (Step 7.1.1.9)}}{\text{Total weight of waste (Step 7.1.1.5 or 7.1.1.7)}} \times 100$$

7.1.2 If the percent solids determined in Step 7.1.1.9 is equal to or greater than 0.5%, then proceed either to Step 7.1.3 to determine whether the solid material requires particle size reduction or to Step 7.1.2.1 if it is noticed that a small amount of the filtrate is entrained in wetting of the filter. If the percent solids determined in Step 7.1.1.9 is less than 0.5%, then proceed to Step 7.2.9 if the nonvolatile 1312 analysis is to be performed, and to Step 7.3 with a fresh portion of the waste if the volatile 1312 analysis is to be performed.

7.1.2.1 Remove the solid phase and filter from the filtration apparatus.

7.1.2.2 Dry the filter and solid phase at 100 $\pm$ 20°C until two successive weighings yield the same value within $\pm$ 1 %. Record the final weight.

Caution: The drying oven should be vented to a hood or other appropriate device to eliminate the possibility of fumes from the sample escaping into the laboratory. Care should be taken to ensure that the sample will not flash or violently react upon heating.

7.1.2.3 Calculate the percent dry solids as follows:

$$\text{Percent dry solids} = \frac{\text{(Weight of dry sample + filter) - tared weight of filter}}{\text{Initial weight of sample (Step 7.1.1.5 or 7.1.1.7)}} \times 100$$

7.1.2.4 If the percent dry solids is less than 0.5%, then proceed to Step 7.2.9 if the nonvolatile 1312 analysis is to be performed, and to Step 7.3 if the volatile 1312 analysis is to be performed. If the percent dry solids is greater than or equal to 0.5%, and if the nonvolatile 1312 analysis is to be performed, return to the beginning of this Step (7.1) and, with a fresh portion of sample, determine whether particle size reduction is necessary (Step 7.1.3).

7.1.3 Determination of whether the sample requires particle-size reduction (particle-size is reduced during this step): Using the solid portion of the sample, evaluate the solid for particle size. Particle-size reduction is required, unless the solid has a surface area per gram of material equal to or greater than 3.1 cm^2, or is smaller than 1 cm in its narrowest dimension (i.e., is capable of passing through a 9.5 mm (0.375 inch) standard sieve). If the surface area is smaller or the particle size larger than described above, prepare the solid portion of the sample for extraction by crushing, cutting, or grinding the waste to a surface area or particle size as described above. If the solids are prepared for organic volatiles extraction, special precautions must be taken (see Step 7.3.6).

NOTE: Surface area criteria are meant for filamentous (e.g., paper, cloth, and similar) waste materials. Actual measurement of surface area is not required, nor is it recommended. For materials that do not obviously meet the criteria, sample-specific methods would need to be developed and employed to measure the surface area. Such methodology is currently not available.

7.1.4 Determination of appropriate extraction fluid:

7.1.4.1 For soils, if the sample is from a site that is east of the Mississippi River, extraction fluid #1 should be used. If the sample is from a site that is west of the Mississippi River, extraction fluid #2 should be used.

7.1.4.2 For wastes and wastewater, extraction fluid #1 should be used.

7.1.4.3 For cyanide-containing wastes and/or soils, extraction fluid #3 (reagent water) must be used because leaching of cyanide-containing samples under acidic conditions may result in the formation of hydrogen cyanide gas.

7.1.5 If the aliquot of the sample used for the preliminary evaluation (Steps 7.1.1 - 7.1.4) was determined to be 100% solid at Step 7.1.1.1, then it can be used for the Step 7.2 extraction (assuming at least 100 grams remain), and the Step 7.3 extraction (assuming at least 25 grams remain). If the aliquot was subjected to the procedure in Step 7.1.1.7, then another aliquot shall be used for the volatile extraction procedure in Step 7.3. The aliquot of the waste subjected to the procedure in Step 7.1.1.7 might be appropriate for use for the Step 7.2 extraction if an adequate amount of solid (as determined by Step 7.1.1.9)

was obtained. The amount of solid necessary is dependent upon whether a sufficient amount of extract will be produced to support the analyses. If an adequate amount of solid remains, proceed to Step 7.2.10 of the nonvolatile 1312 extraction.

7.2 Procedure When Volatiles Are Not Involved

A minimum sample size of 100 grams (solid and liquid phases) is recommended. In some cases, a larger sample size may be appropriate, depending on the solids content of the waste sample (percent solids, See Step 7.1.1), whether the initial liquid phase of the waste will be miscible with the aqueous extract of the solid, and whether inorganics, semivolatile organics, pesticides, and herbicides are all analytes of concern. Enough solids should be generated for extraction such that the volume of 1312 extract will be sufficient to support all of the analyses required. If the amount of extract generated by a single 1312 extraction will not be sufficient to perform all of the analyses, more than one extraction may be performed and the extracts from each combined and aliquoted for analysis.

7.2.1 If the sample will obviously yield no liquid when subjected to pressure filtration (i.e., is 100 % solid, see Step 7.1.1), weigh out a subsample of the sample (100 gram minimum) and proceed to Step 7.2.9.

7.2.2 If the sample is liquid or multiphasic, liquid/solid separation is required. This involves the filtration device described in Step 4.3.2 and is outlined in Steps 7.2.3 to 7.2.8.

7.2.3 Pre-weigh the container that will receive the filtrate.

7.2.4 Assemble the filter holder and filter following the manufacturer's instructions. Place the filter on the support screen and secure. Acid wash the filter if evaluating the mobility of metals (see Step 4.4).

NOTE: Acid washed filters may be used for all nonvolatile extractions even when metals are not of concern.

7.2.5 Weigh out a subsample of the sample (100 gram minimum) and record the weight. If the waste contains <0.5 % dry solids (Step 7.1.2), the liquid portion of the waste, after filtration, is defined as the 1312 extract. Therefore, enough of the sample should be filtered so that the amount of filtered liquid will support all of the analyses required of the 1312 extract. For wastes containing >0.5 % dry solids (Steps 7.1.1 or 7.1.2), use the percent solids information obtained in Step 7.1.1 to determine the optimum sample size (100 gram minimum) for filtration. Enough solids should be generated by filtration to support the analyses to be performed on the 1312 extract.

7.2.6 Allow slurries to stand to permit the solid phase to settle. Samples that settle slowly may be centrifuged prior to filtration. Use centrifugation only as an aid to filtration. If the sample is centrifuged, the liquid should be decanted and filtered followed by filtration of the solid portion of the waste through the same filtration system.

7.2.7 Quantitatively transfer the sample (liquid and solid phases) to the filter holder (see Step 4.3.2). Spread the waste sample evenly over the surface of the filter. If filtration of the waste at 4°C reduces the amount of expressed liquid over what would be expressed at room temperature, then allow the sample to warm up to room temperature in the device before filtering.

Gradually apply vacuum or gentle pressure of 1-10 psig, until air or pressurizing gas moves through the filter. If this point if not reached under 10 psig, and if no additional liquid has passed through the filter in any 2-minute interval, slowly increase the pressure in 10-psig increments to maximum of 50 psig. After each incremental increase of 10 psig, if the pressurizing gas has not moved through the filter, and if no additional liquid has passed through the filter in any 2-minute interval, proceed to the next 10-psig increment. When the pressurizing gas begins to move through the filter, or when the liquid flow has ceased at 50 psig (i.e., filtration does not result in any additional filtrate within a 2-minute period), stop the filtration.

NOTE: If waste material (>1 % of the original sample weight) has obviously adhered to the container used to transfer the sample to the filtration apparatus, determine the weight of this residue and subtract it from the sample weight determined in Step 7.2.5, to determine the weight of the waste sample that will be filtered.

NOTE: Instantaneous application of high pressure can degrade the glass fiber filter and may cause premature plugging.

7.2.8 The material in the filter holder is defined as the solid phase of the sample, and the filtrate is defined as the liquid phase. Weigh the filtrate. The liquid phase may now be either analyzed (see Step 7.2.12) or stored at 4°C until time of analysis.

NOTE: Some wastes, such as oily wastes and some paint wastes, will obviously contain some material which appears to be a liquid. Even after applying vacuum or pressure filtration, as outlined in Step 7.2.7, this material may not filter. If this is the case, the material within the filtration device is defined as a solid, and is carried through the extraction as a solid. Do not replace the original filter with a fresh filter under any circumstances. Use only one filter.

7.2.9 If the sample contains <0.5% dry solids (see Step 7.1.2), proceed to Step 7.2.13. If the sample contains >0.5 % dry solids (see Step 7.1.1 or 7.1.2), and if particle-size reduction of the solid was needed in Step 7.1.3, proceed to Step 7.2.10. If the sample as received passes a 9.5 mm sieve, quantitatively transfer the solid material into the extractor bottle along with the filter used to separate the initial liquid from the solid phase, and proceed to Step 7.2.11.

7.2.10 Prepare the solid portion of the sample for extraction by crushing, cutting, or grinding the waste to a surface area or particle-size as described in Step 7.1.3. When the surface area or particle-size has been appropriately altered, quantitatively transfer the solid material

into an extractor bottle. Include the filter used to separate the initial liquid from the solid phase.

NOTE: Sieving of the waste is not normally required. Surface area requirements are meant for filamentous (e.g., paper, cloth) and similar waste materials. Actual measurement of surface area is not recommended. If sieving is necessary, a Teflon-coated sieve should be used to avoid contamination of the sample.

7.2.11 Determine the amount of extraction fluid to add to the extractor vessel as follows:

$$\text{Weight of extraction fluid} = \frac{20 \times \%\ \text{solids (Step 7.1.1)} \times \text{weight of waste filtered (Step 7.2.5 or 7.2.7)}}{100}$$

Slowly add this amount of appropriate extraction fluid (see Step 7.1.4) to the extractor vessel. Close the extractor bottle tightly (it is recommended that Teflon tape be used to ensure a tight seal), secure in rotary extractor device, and rotate at 30 ± 2 rpm for 18 ± 2 hours. Ambient temperature (i.e., temperature of room in which extraction takes place) shall be maintained at 23 ± 2°C during the extraction period.

NOTE: As agitation continues, pressure may build up within the extractor bottle for some types of sample (e.g., limed or calcium carbonate-containing sample may evolve gases such as carbon dioxide). To relieve excess pressure, the extractor bottle may be periodically opened (e.g., after 15 minutes, 30 minutes, and 1 hour) and vented into a hood.

7.2.12 Following the 18 ± 2 hour extraction, separate the material in the extractor vessel into its component liquid and solid phases by filtering through a new glass fiber filter, as outlined in Step 7.2.7. For final filtration of the 1312 extract, the glass fiber filter may be changed, if necessary, to facilitate filtration. Filter(s) shall be acid-washed (see Step 4.4) if evaluating the mobility of metals.

7.2.13 Prepare the 1312 extract as follows:

7.2.13.1 If the sample contained no initial liquid phase, the filtered liquid material obtained from Step 7.2.12 is defined as the 1312 extract. Proceed to Step 7.2.14.

7.2.13.2 If compatible (e.g., multiple phases will not result on combination), combine the filtered liquid resulting from Step 7.2.12 with the initial liquid phase of the sample obtained in Step 7.2.7. This combined liquid is defined as the 1312 extract. Proceed to Step 7.2.14.

7.2.13.3 If the initial liquid phase of the waste, as obtained from Step 7.2.7, is not or may not be compatible with the filtered liquid resulting from Step 7.2.12, do not combine these

liquids. Analyze these liquids, collectively defined as the 1312 extract, and combine the results mathematically, as described in Step 7.2.14.

7.2.14 Following collection of the 1312 extract, the pH of the extract should be recorded. Immediately aliquot and preserve the extract for analysis. Metals aliquots must be acidified with nitric acid to pH < 2. If precipitation is observed upon addition of nitric acid to a small aliquot of the extract, then the remaining portion of the extract for metals analyses shall not be acidified and the extract shall be analyzed as soon as possible. All other aliquots must be stored under refrigeration (4°C) until analyzed. The 1312 extract shall be prepared and analyzed according to appropriate analytical methods. 1312 extracts to be analyzed for metals shall be acid digested except in those instances where digestion causes loss of metallic analytes. If an analysis of the undigested extract shows that the concentration of any regulated metallic analyte exceeds the regulatory level, then the waste is hazardous and digestion of the extract is not necessary. However, data on undigested extracts alone cannot be used to demonstrate that the waste is not hazardous. If the individual phases are to be analyzed separately, determine the volume of the individual phases (to ± 0.5 %), conduct the appropriate analyses, and combine the results mathematically by using a simple volume-weighted average:

$$\text{Final Analyte Concentration} = \frac{(V_1)\ (C_1) + (V_2)\ (C_2)}{V_1 + V_2}$$

where:

V_1 = The volume of the first phase (L).
C_1 = The concentration of the analyte of concern in the first phase (mg/L).
V_2 = The volume of the second phase (L).
C_2 = The concentration of the analyte of concern in the second phase (mg/L).

7.2.15 Compare the analyte concentrations in the 1312 extract with the levels identified in the appropriate regulations. Refer to Section 8.0 for quality assurance requirements.

7.3 Procedure When Volatiles Are Involved

Use the ZHE device to obtain 1312 extract for analysis of volatile compounds only. Extract resulting from the use of the ZHE shall not be used to evaluate the mobility of non-volatile analytes (e.g., metals, pesticides, etc.).

The ZHE device has approximately a 500 mL internal capacity. The ZHE can thus accommodate a maximum of 25 grams of solid (defined as that fraction of a sample from which no additional liquid may be forced out by an applied pressure of 50 psig), due to the need to add an amount of extraction fluid equal to 20 times the weight of the solid phase.

Charge the ZHE with sample only once and do not open the device until the final extract (of the solid) has been collected. Repeated filling of the ZHE to obtain 25 grams of solid is not permitted.

Do not allow the sample, the initial liquid phase, or the extract to be exposed to the atmosphere for any more time than is absolutely necessary. Any manipulation of these materials should be done when cold (4°C) to minimize loss of volatiles.

7.3.1 Pre-weigh the (evacuated) filtrate collection container (see Step 4.6) and set aside. If using a TEDLAR® bag, express all liquid from the ZHE device into the bag, whether for the initial or final liquid/solid separation, and take an aliquot from the liquid in the bag for analysis. The containers listed in Step 4.6 are recommended for use under the conditions stated in Steps 4.6.1-4.6.3.

7.3.2 Place the ZHE piston within the body of the ZHE (it may be helpful first to moisten the piston O-rings slightly with extraction fluid). Adjust the piston within the ZHE body to a height that will minimize the distance the piston will have to move once the ZHE is charged with sample (based upon sample size requirements determined from Step 7.3, Step 7.1.1 and/or 7.1.2). Secure the gas inlet/outlet flange (bottom flange) onto the ZHE body in accordance with the manufacturer's instructions. Secure the glass fiber filter between the support screens and set aside. Set liquid inlet/outlet flange (top flange) aside.

7.3.3 If the sample is 100% solid (see Step 7.1.1), weigh out a subsample (25 gram maximum) of the waste, record weight, and proceed to Step 7.3.5.

7.3.4 If the sample contains <0.5% dry solids (Step 7.1.2), the liquid portion of waste, after filtration, is defined as the 1312 extract. Filter enough of the sample so that the amount of filtered liquid will support all of the volatile analyses required. For samples containing ≥0.5% dry solids (Steps 7.1.1 and/or 7.1.2), use the percent solids information obtained in Step 7.1.1 to determine the optimum sample size to charge into the ZHE. The recommended sample size is as follows:

7.3.4.1 For samples containing <5% solids (see Step 7.1.1), weigh out a 500 gram subsample of waste and record the weight.

7.3.4.2 For wastes containing >5% solids (see Step 7.1.1), determine the amount of waste to charge into the ZHE as follows:

$$\text{Weight of waste to charge ZHE} = \frac{25}{\text{percent solids (Step 7.1.1)}} \times 100$$

Weigh out a subsample of the waste of the appropriate size and record the weight.

7.3.5 If particle-size reduction of the solid portion of the sample was required in Step 7.1.3, proceed to Step 7.3.6. If particle-size reduction was not required in Step 7.1.3, proceed to Step 7.3.7.

7.3.6 Prepare the sample for extraction by crushing, cutting, or grinding the solid portion of the waste to a surface area or particle size as described in Step 7.1.3.1. Wastes and appropriate reduction equipment should be refrigerated, if possible, to 4°C prior to particle-size reduction. The means used to effect particle-size reduction must not generate heat in and of itself. If reduction of the solid phase of the waste is necessary, exposure of the waste to the atmosphere should be avoided to the extent possible.

> NOTE: Sieving of the waste is not recommended due to the possibility that volatiles may be lost. The use of an appropriately graduated ruler is recommended as an acceptable alternative. Surface area requirements are meant for filamentous (e.g., paper, cloth) and similar waste materials. Actual measurement of surface area is not recommended.

When the surface area or particle-size has been appropriately altered, proceed to Step 7.3.7.

7.3.7 Waste slurries need not be allowed to stand to permit the solid phase to settle. Do not centrifuge samples prior to filtration.

7.3.8 Quantitatively transfer the entire sample (liquid and solid phases) quickly to the ZHE. Secure the filter and support screens into the top flange of the device and secure the top flange to the ZHE body in accordance with the manufacturer's instructions. Tighten all ZHE fittings and place the device in the vertical position (gas inlet/outlet flange on the bottom). Do not attach the extraction collection device to the top plate.

> Note: If sample material (>1% of original sample weight) has obviously adhered to the container used to transfer the sample to the ZHE, determine the weight of this residue and subtract it from the sample weight determined in Step 7.3.4 to determine the weight of the waste sample that will be filtered.

Attach a gas line to the gas inlet/outlet valve (bottom flange) and, with the liquid inlet/outlet valve (top flange) open, begin applying gentle pressure of 1-10 psig (or more if necessary) to force all headspace slowly out of the ZHE device into a hood. At the first appearance of liquid from the liquid inlet/outlet valve, quickly close the valve and discontinue pressure. If filtration of the waste at 4°C reduces the amount of expressed liquid over what would be expressed at room temperature, then allow the sample to warm up to room temperature in the device before filtering. If the waste is 100 % solid (see Step 7.1.1), slowly increase the pressure to a maximum of 50 psig to force most of the headspace out of the device and proceed to Step 7.3.12.

7.3.9 Attach the evacuated pre-weighed filtrate collection container to the liquid inlet/outlet valve and open the valve. Begin applying gentle pressure of 1-10 psig to force the liquid phase of the sample into the filtrate collection container. If no additional liquid has passed through the filter in any 2-minute interval, slowly increase the pressure in 10-psig increments to a maximum of 50 psig. After each incremental increase of 10 psig, if no additional liquid has passed through the filter in any 2-minute interval, proceed to the next 10-psig increment. When liquid flow has ceased such that continued pressure filtration at 50 psig does not result in any additional filtrate within a 2-minute period, stop the filtration. Close the liquid inlet/outlet valve, discontinue pressure to the piston, and disconnect and weigh the filtrate collection container.

NOTE: Instantaneous application of high pressure can degrade the glass fiber filter and may cause premature plugging.

7.3.10 The material in the ZHE is defined as the solid phase of the sample and the filtrate is defined as the liquid phase.

NOTE: Some samples, such as oily wastes and some paint wastes, will obviously contain some material which appears to be a liquid. Even after applying pressure filtration, this material will not filter. If this is the case, the material within the filtration device is defined as a solid, and is carried through the 1312 extraction as a solid.

If the original waste contained <0.5 % dry solids (see Step 7.1.2), this filtrate is defined as the 1312 extract and is analyzed directly. Proceed to Step 7.3.15.

7.3.11 The liquid phase may now be either analyzed immediately (see Steps 7.3.13 through 7.3.15) or stored at 4°C under minimal headspace conditions until time of analysis. Determine the weight of extraction fluid #3 to add to the ZHE as follows:

$$\text{Weight of extraction fluid} = \frac{20 \times \text{\% solids (Step 7.1.1)} \times \text{weight of waste filtered (Step 7.3.4 or 7.3.8)}}{100}$$

7.3.12 The following steps detail how to add the appropriate amount of extraction fluid to the solid material within the ZHE and agitation of the ZHE vessel. Extraction fluid #3 is used in all cases (see Step 5.4.3).

7.3.12.1 With the ZHE in the vertical position, attach a line from the extraction fluid reservoir to the liquid inlet/outlet valve. The line used shall contain fresh extraction fluid and should be preflushed with fluid to eliminate any air pockets in the line. Release gas pressure on the ZHE piston (from the gas inlet/outlet valve), open the liquid inlet/outlet valve, and begin transferring extraction fluid (by pumping or similar means) into

the ZHE. Continue pumping extraction fluid into the ZHE until the appropriate amount of fluid has been introduced into the device.

7.3.12.2 After the extraction fluid has been added, immediately close the liquid inlet/outlet valve and disconnect the extraction fluid line. Check the ZHE to ensure that all valves are in their closed positions. Manually rotate the device in an end-over-end fashion 2 or 3 times. Reposition the ZHE in the vertical position with the liquid inlet/outlet valve on top. Pressurize the ZHE to 5-10 psig (if necessary) and slowly open the liquid inlet/outlet valve to bleed out any headspace (into a hood) that may have been introduced due to the addition of extraction fluid. This bleeding shall be done quickly and shall be stopped at the first appearance of liquid from the valve. Re-pressurize the ZHE with 5-10 psig and check all ZHE fittings to ensure that they are closed.

7.3.12.3 Place the ZHE in the rotary extractor apparatus (if it is not already there) and rotate at 30 ± 2 rpm for 18 ± 2 hours. Ambient temperature (i.e., temperature of room in which extraction occurs) shall be maintained at 23 ± 2°C during agitation.

7.3.13 Following the 18 ± 2 hour agitation period, check the pressure behind the ZHE piston by quickly opening and closing the gas inlet/outlet valve and noting the escape of gas. If the pressure has not been maintained (i.e., no gas release observed), the ZHE is leaking. Check the ZHE for leaking as specified in Step 4.2.1, and perform the extraction again with a new sample of waste. If the pressure within the device has been maintained, the material in the extractor vessel is once again separated into its component liquid and solid phases. If the waste contained an initial liquid phase, the liquid may be filtered directly into the same filtrate collection container (i.e., TEDLAR® bag) holding the initial liquid phase of the waste. A separate filtrate collection container must be used if combining would create multiple phases, or there is not enough volume left within the filtrate collection container. Filter through the glass fiber filter, using the ZHE device as discussed in Step 7.3.9. All extracts shall be filtered and collected if the TEDLAR® bag is used, if the extract is multiphasic, or if the waste contained an initial liquid phase (see Steps 4.6 and 7.3.1).

NOTE: An in-line glass fiber filter may be used to filter the material within the ZHE if it is suspected that the glass fiber filter has been ruptured

7.3.14 If the original sample contained no initial liquid phase, the filtered liquid material obtained from Step 7.3.13 is defined as the 1312 extract. If the sample contained an initial liquid phase, the filtered liquid material obtained from Step 7.3.13 and the initial liquid phase (Step 7.3.9) are collectively defined as the 1312 extract.

7.3.15 Following collection of the 1312 extract, immediately prepare the extract for analysis and store with minimal headspace at 4°C

until analyzed. Analyze the 1312 extract according to the appropriate analytical methods. If the individual phases are to be analyzed separately (i.e., are not miscible), determine the volume of the individual phases (to 0.5%), conduct the appropriate analyses, and combine the results mathematically by using a simple volume- weighted average:

$$\text{Final Analyte Concentration} = \frac{(V_1)\ (C_1) + (V_2)\ (C_2)}{V_1 + V_2}$$

where:

V_1 = The volume of the first phases (L).
C_1 = The concentration of the analyte of concern in the first phase (mg/L).
V_2 = The volume of the second phase (L).
C_2 = The concentration of the analyte of concern in the second phase (mg/L).

7.3.16 Compare the analyte concentrations in the 1312 extract with the levels identified in the appropriate regulations. Refer to Step 8.0 for quality assurance requirements.

8.0 QUALITY CONTROL

8.1 A minimum of one blank (using the same extraction fluid as used for the samples) for every 20 extractions that have been conducted in an extraction vessel. Refer to Chapter One for additional quality control protocols.

8.2 A matrix spike shall be performed for each waste type (e.g., wastewater treatment sludge, contaminated soil, etc.) unless the result exceeds the regulatory level and the data is being used solely to demonstrate that the waste property exceeds the regulatory level. A minimum of one matrix spike must be analyzed for each analytical batch. As a minimum, follow the matrix spike addition guidance provided in each analytical method.

8.2.1 Matrix spikes are to be added after filtration of the 1312 extract and before preservation. Matrix spikes should not be added prior to 1312 extraction of the sample.

8.2.2 In most cases, matrix spike levels should be added at a concentration equivalent to the corresponding regulatory level. If the analyte concentration is less than one half the regulatory level, the spike concentration may be as low as one half of the analyte concentration, but may not be less than five times the method detection limit. In order to avoid differences in matrix effects, the matrix spikes must be added to the same nominal volume of 1312 extract as that which was analyzed for the unspiked sample.

8.2.3 The purpose of the matrix spike is to monitor the performance of the analytical methods used, and to determine whether

matrix interferences exist. Use of other internal calibration methods, modification of the analytical methods, or use of alternate analytical methods may be needed to accurately measure the analyte concentration in the 1312 extract when the recovery of the matrix spike is below the expected analytical method performance.

8.2.4 Matrix spike recoveries are calculated by the following formula:

$$\%R \text{ (\% Recovery)} = 100\ (X_s - X_u) / K$$

where:

X_s = measured value for the spiked sample
X_u = measured value for the unspiked sample, and
K = known value of the spike in the sample.

8.3 All quality control measures described in the appropriate analytical methods shall be followed.

8.4 The use of internal calibration quantitation methods shall be employed for a metallic contaminant if: (1) Recovery of the contaminant from the 1312 extract is not at least 50% and the concentration does not exceed the appropriate regulatory level, and (2) The concentration of the contaminant measured in the extract is within 20% of the appropriate regulatory level.

8.4.1. The method of standard additions shall be employed as the internal calibration quantitation method for each metallic contaminant.

8.4.2 The method of standard additions requires preparing calibration standards in the sample matrix rather than reagent water or blank solution. It requires taking four identical aliquots of the solution and adding known amounts of standard to three of these aliquots. The forth aliquot is the unknown. Preferably, the first addition should be prepared so that the resulting concentration is approximately 50% of the expected concentration of the sample. The second and third additions should be prepared so that the concentrations are approximately 100% and 150% of the expected concentration of the sample. All four aliquots are maintained at the same final volume by adding reagent water or a blank solution, and may need dilution adjustment to maintain the signals in the linear range of the instrument technique. All four aliquots are analyzed.

8.4.3 Prepare a plot, or subject data to linear regression, of instrument signals or external-calibration-derived concentrations as the dependant variable (y-axis) versus concentrations of the additions of standards as the independent variable (x-axis). Solve for the intercept of the abscissa (the independent variable, x-axis) which is the concentration in the unknown.

8.4.4 Alternately, subtract the instrumental signal or external-calibration-derived concentration of the unknown (unspiked) sample from the instrumental signals or external-calibration-derived concentrations of the standard additions. Plot or subject to linear regression of the corrected instrument signals or external-calibration-derived concentra-

tions as the dependant variable versus the independent variable. Derive concentrations for the unknowns using the internal calibration curve as if it were an external calibration curve.

8.5 Samples must undergo 1312 extraction within the following time periods:

SAMPLE MAXIMUM HOLDING TIMES (days)

	From: Field Collection To: 1312 extraction	From: 1312 extraction To: Preparative extraction	From: Preparative extraction To: Determinative analysis	Total Elapsed Time
Volatiles	14	NA	14	28
Semi-volatiles	14	7	40	61
Mercury	28	NA	28	56
Metals, except mercury	180	NA	180	360
NA = Not Applicable				

If sample holding times are exceeded, the values obtained will be considered minimal concentrations. Exceeding the holding time is not acceptable in establishing that a waste does not exceed the regulatory level. Exceeding the holding time will not invalidate characterization if the waste exceeds the regulatory level.

9.0 METHOD PERFORMANCE

9.1 Precision results for semi-volatiles and metals: An eastern soil with high organic content and a western soil with low organic content were used for the semi-volatile and metal leaching experiments. Both types of soil were analyzed prior to contaminant spiking. The results are shown in Table 6. The concentration of contaminants leached from the soils were reproducible, as shown by the moderate relative standard deviations (RSDs) of the recoveries (averaging 29% for the compounds and elements analyzed).

9.2 Precision results for volatiles: Four different soils were spiked and tested for the extraction of volatiles. Soils One and Two were from western and eastern Superfund sites. Soils Three and Four were mixtures of a western soil with low organic content and two different municipal sludges. The results are shown in Table 7. Extract concentrations of volatile organics from the eastern soil were lower than from the western soil. Replicate leachings of Soils

Three and Four showed lower precision than the leachates from the Superfund soils.

10.0 REFERENCES

1. Environmental Monitoring Systems Laboratory, "Performance Testing of Method 1312; QA Support for RCRA Testing: Project Report". EPA/600/4-89/022. EPA Contract 68-03-3249 to Lockheed Engineering and Sciences Company, June 1989.

2. Research Triangle Institute, "Interlaboratory Comparison of Methods 1310, 1311, and 1312 for Lead in Soil". U.S. EPA Contract 68-01-7075, November 1988.

Table 1. Volatile Analytes[1]

Compound	CAS No.
Acetone	67-64-1
Benzene	71-43-2
n-Butyl alcohol	71-36-3
Carbon disulfide	75-15-0
Carbon tetrachloride	56-23-5
Chlorobenzene	108-90-7
Chloroform	67-66-3
1,2-Dichloroethane	107-06-2
1,1-Dichloroethylene	75-35-4
Ethyl acetate	141-78-6
Ethyl benzene	100-41-4
Ethyl ether	60-29-7
Isobutanol	78-83-1
Methanol	67-56-1
Methylene chloride	75-09-2
Methyl ethyl ketone	78-93-3
Methyl isobutyl ketone	108-10-1
Tetrachloroethylene	127-18-4
Toluene	108-88-3
1,1,1,-Trichloroethane	71-55-6
Trichloroethylene	79-01-6
Trichlorofluoromethane	75-69-4
1,1,2-Trichloro-1,2,2-trifluoroethane	76-13-1
Vinyl chloride	75-01-4
Xylene	1330-20-7

[1] When testing for any or all of these analytes, the zero-headspace extractor vessel shall be used instead of the bottle extractor.

Table 2. Suitable Rotary Agitation Apparatus[1]

Company	Location	Model No.
Analytical Testing and Consulting Services, Inc.	Warrington, PA (215) 343-4490	4-vessel extractor (DC20S); 8-vessel extractor (DC20); 12-vessel extractor (DC20B)
Associated Design and Manufacturing Company	Alexandria, VA (703) 549-5999	2-vessel (3740-2); 4-vessel (3740-4); 6-vessel (3740-6); 8-vessel (3740-8); 12-vessel (3740-12); 24-vessel (3740-24)
Environmental Machine and Design, Inc.	Lynchburg, VA (804) 845-6424	8-vessel (08-00-00) 4-vessel (04-00-00)
IRA Machine Shop and Laboratory	Santurce, PR (809) 752-4004	8-vessel (011001)
Lars Lande Manufacturing	Whitmore Lake, MI (313) 449-4116	10-vessel (10VRE) 5-vessel (5VRE)
Millipore Corp.	Bedford, MA (800) 225-3384	4-ZHE or 4 1-liter bottle extractor (YT300RAHW)

[1] Any device that rotates the extraction vessel in an end-over-end fashion at 30 ±2 rpm is acceptable.

Table 3. Suitable Zero-Headspace Extractor Vessels[1]

Company	Location	Model No.
Analytical Testing & Consulting Services, Inc.	Warrington, PA (215) 343-4490	C102, Mechanical Pressure Device
Associated Design and Manufacturing Company	Alexandria, VA (703) 549-5999	3745-ZHE, Gas Pressure Device
Lars Lande Manufacturing[2]	Whitmore Lake, MI (313) 449-4116	ZHE-11, Gas Pressure Device
Millipore Corporation	Bedford, MA (800) 225-3384	YT30090HW, Gas Pressure Device
Environmental Machine and Design, Inc.	Lynchburg, VA (804) 845-6424	VOLA-TOX1, Gas Pressure Device

[1] Any device that meets the specifications listed in Step 4.2.1 of the method is suitable.

[2] This device uses a 110 mm filter.

Table 4. Suitable Filter Holders[1]

Company	Location	Model/ Catalogue #	Size
Nucleopore Corporation	Pleasanton, CA (800) 882-7711	425910 410400	142 mm 47 mm
Micro Filtration Systems	Dublin, CA (800) 334-7132 (415) 828-6010	302400 311400	142 mm 47 mm
Millipore Corporation	Bedford, MA (800) 225-3384	YT30142HW XX1004700	142 mm 47 mm

[1] Any device capable of separating the liquid from the solid phase of the waste is suitable, providing that it is chemically compatible with the waste and the constituents to be analyzed. Plastic devices (not listed above) may be used when only inorganic analytes are of concern. The 142 mm size filter holder is recommended.

Table 5. Suitable Filter Media[1]

Company	Location	Model	Pore Size (μm)
Millipore Corporation	Bedford, MA (800) 225-3384	AP40	0.7
Nucleopore Corporation	Pleasanton, CA (415) 463-2530	211625	0.7
Whatman Laboratory Products, Inc.	Clifton, NJ (201) 773-5800	GFF	0.7
Micro Filtration Systems	Dublin, CA (800) 334-7132 (415) 828-6010	GF75	0.7

[1] Any filter that meets the specifications in Step 4.4 of the Method is suitable.

TABLE 6 - METHOD 1312 PRECISION RESULTS FOR SEMI-VOLATILES AND METALS

		Eastern Soil (pH 4.2)		Western Soil (pH 5.0)	
	Amount Spiked (µg)	Amount Recovered* (µg)	% RSD	Amount Recovered* (µg)	% RSD
FORTIFIED ANALYTES					
bis(2-chloroethyl)-ether	1040	834	12.5	616	14.2
2-Chlorophenol	1620	1010	6.8	525	54.9
1,4-Dichlorobenzene	2000	344	12.3	272	34.6
1,2-Dichlorobenzene	8920	1010	8.0	1520	28.4
2-Methylphenol	3940	1860	7.7	1130	32.6
Nitrobenzene	1010	812	10.0	457	21.3
2,4-Dimethylphenol	1460	200	18.4	18	87.6
Hexachlorobutadiene	6300	95	12.9	280	22.8
Acenaphthene	3640	210	8.1	310**	7.7
2,4-Dinitrophenol	1300	896**	6.1	23**	15.7
2,4-Dinitrotoluene	1900	1150	5.4	585	54.4
Hexachlorobenzene	1840	3.7	12.0	10	173.2
gamma BHC (Lindane)	7440	230	16.3	1240	55.2
beta BHC	640	35	13.3	65.3	51.7
METALS					
Lead	5000	70	4.3	10	51.7
Cadmium	1000	387	2.3	91	71.3

* - Triplicate analyses.
** - Duplicate analyses; one value was rejected as an outlier at the 90% confidence level using the Dixon Q test.

TABLE 7 - METHOD 1312 PRECISION RESULTS FOR VOLATILES

Compound Name	Soil No. 1 (Western) Avg. %Rec.*	Soil No. 1 (Western) %RSD	Soil No. 2 (Eastern) Avg. %Rec.*	Soil No. 2 (Eastern) %RSD	Soil No. 3 (Western and Sludge) Avg. %Rec.**	Soil No. 3 (Western and Sludge) %RSD	Soil No. 4 (Western and Sludge) Avg. %Rec.***	Soil No. 4 (Western and Sludge) %RSD
Acetone	44.0	12.4	43.8	2.25	116.0	11.5	21.3	71.4
Acrylonitrile	52.5	68.4	50.5	70.0	49.3	44.9	51.8	4.6
Benzene	47.8	8.29	34.8	16.3	49.8	36.7	33.4	41.1
n-Butyl Alcohol (1-Butanol)	55.5	2.91	49.2	14.6	65.5	37.2	73.0	13.9
Carbon disulfide	21.4	16.4	12.9	49.5	36.5	51.5	21.3	31.5
Carbon tetrachloride	40.6	18.6	22.3	29.1	36.2	41.4	24.0	34.0
Chlorobenzene	64.4	6.76	41.5	13.1	44.2	32.0	33.0	24.9
Chloroform	61.3	8.04	54.8	16.4	61.8	29.1	45.8	38.6
1,2-Dichloroethane	73.4	4.59	68.7	11.3	58.3	33.3	41.2	37.8
1,1-Dichloroethane	31.4	14.5	22.9	39.3	32.0	54.4	16.8	26.4
Ethyl acetate	76.4	9.65	75.4	4.02	23.0	119.8	11.0	115.5
Ethylbenzene	56.2	9.22	23.2	11.5	37.5	36.1	27.2	28.6
Ethyl ether	48.0	16.4	55.1	9.72	37.3	31.2	42.0	17.6
Isobutanol (4-Methyl -1-propanol)	0.0	ND	0.0	ND	61.8	37.7	76.0	12.2
Methylene chloride	47.5	30.3	42.2	42.9	52.0	37.4	37.3	16.6
Methyl ethyl ketone (2-Butanone)	56.7	5.94	61.9	3.94	73.7	31.3	40.6	39.0
Methyl isobutyl ketone	81.1	10.3	88.9	2.99	58.3	32.6	39.8	40.3
1,1,1,2-Tetrachloro-ethane	69.0	6.73	41.1	11.3	50.8	31.5	36.8	23.8
1,1,2,2-Tetrachloro-ethane	85.3	7.04	58.9	4.15	64.0	25.7	53.6	15.8
Tetrachloroethene	45.1	12.7	15.2	17.4	26.2	44.0	18.6	24.2
Toluene	59.2	8.06	49.3	10.5	45.7	35.2	31.4	37.2
1,1,1-Trichloro-ethane	47.2	16.0	33.8	22.8	40.7	40.6	26.2	38.8
1,1,2-Trichloro-ethane	76.2	5.72	67.3	8.43	61.7	28.0	46.4	25.4
Trichloroethene	54.5	11.1	39.4	19.5	38.8	40.9	25.6	34.1
Trichloro-fluoromethane	20.7	24.5	12.6	60.1	28.5	34.0	19.8	33.9
1,1,2-Trichloro-trifluoroethane	18.1	26.7	6.95	58.0	21.5	67.8	15.3	24.8
Vinyl chloride	10.2	20.3	7.17	72.8	25.0	61.0	11.8	25.4

* Triplicate analyses
** Six replicate analyses
*** Five replicate analyses

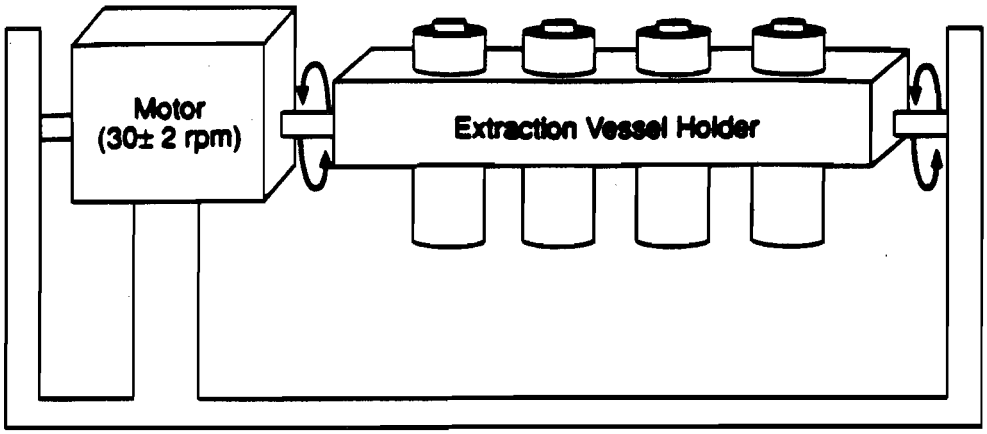

Figure 1. Rotary Agitation Apparatus

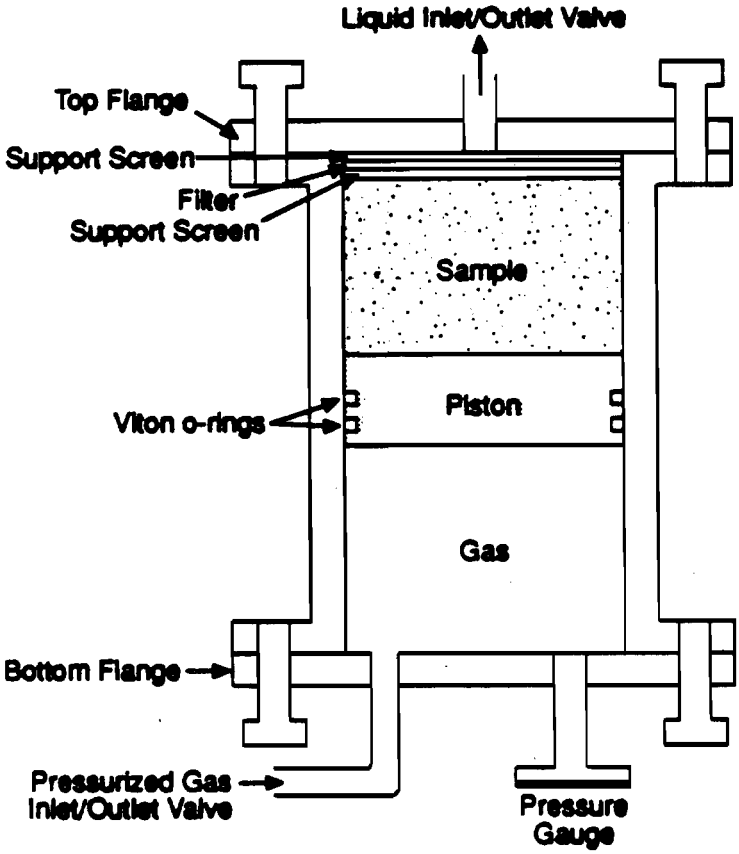

Figure 2. Zero-Headspace Extractor (ZHE)

METHOD 1312

SYNTHETIC PRECIPITATION LEACHING PROCEDURE

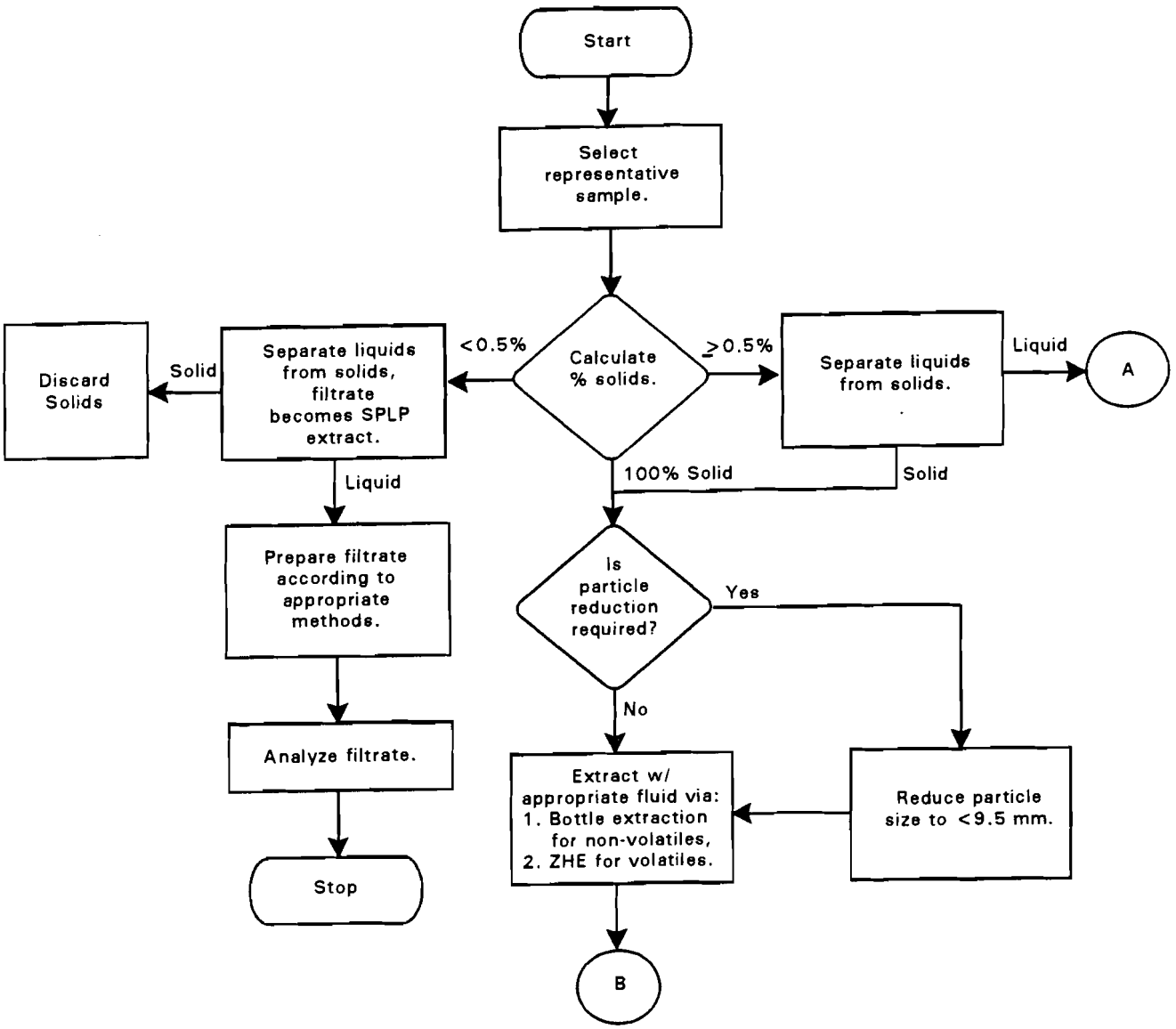

SYNTHETIC PRECIPITATION LEACHING PROCEDURE (continued)

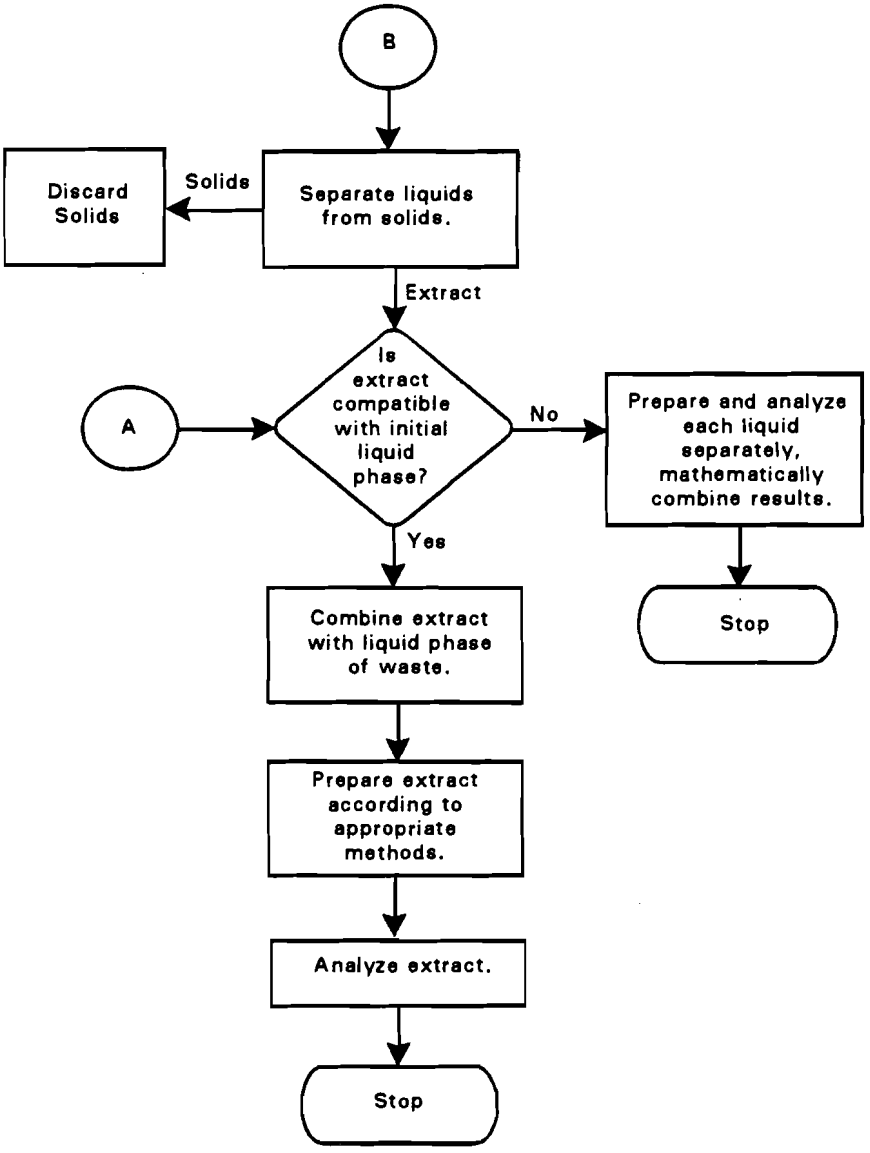

METHOD 1320

MULTIPLE EXTRACTION PROCEDURE

1.0 SCOPE AND APPLICATION

The Multiple Extraction Procedure (MEP) described in this method is designed to simulate the leaching that a waste will undergo from repetitive precipitation of acid rain on an improperly designed sanitary landfill. The repetitive extractions reveal the highest concentration of each constituent that is likely to leach in a natural environment. Method 1320 is applicable to liquid, solid, and multiphase samples.

2.0 SUMMARY OF METHOD

Waste samples are extracted according to the Extraction Procedure Toxicity Test (Method 1310, Chapter 8) and analyzed for the constituents of concern listed in Chapter 7, Table 7-1: Maximum Concentration of Contaminants for Characteristic of EP Toxicity, using the 7000 and 8000 series methods. Then the solid portions of the samples that remain after application of Method 1310 are re-extracted nine times using synthetic acid rain extraction fluid. If the concentration of any constituent of concern increases from the 7th or 8th extraction to the 9th extraction, the procedure is repeated until these concentrations decrease.

3.0 INTERFERENCES

Potential interferences that may be encountered during analysis are discussed in the appropriate analytical methods.

4.0 APPARATUS AND MATERIALS

4.1 Refer to Method 1310.

5.0 REAGENTS

5.1 Refer to Method 1310.

5.2 Sulfuric acid:nitric acid, 60/40 weight percent mixture: Cautiously mix 60 g of concentrated sulfuric acid with 40 g of concentrated nitric acid.

6.0 SAMPLE COLLECTION, PRESERVATION, AND HANDLING

6.1 Refer to Method 1310.

7.0 PROCEDURE

7.1 Run the Extraction Procedure (EP) test in Method 1310.

7.2 Analyze the extract for the constituents of interest.

7.3 Prepare a synthetic acid rain extraction fluid by adding the 60/40 weight percent sulfuric acid and nitric acid to distilled deionized water until the pH is 3.0 ± 0.2.

7.4 Take the solid phase of the sample remaining after the Separation Procedure of the Extraction Procedure and weigh it. Measure an aliquot of synthetic acid rain extraction fluid equal to 20 times the weight of the solid sample. Do not allow the solid sample to dry before weighing.

7.5 Combine the solid phase sample and acid rain fluid in the same extractor as used in the EP and begin agitation. Record the pH within 5-10 min after agitation has been started.

7.6 Agitate the mixture for 24 hr, maintaining the temperature at 20-40°C (68-104°F). Record the pH at the end of the 24-hr extraction period.

7.7 Repeat the Separation Procedure as described in Method 1310.

7.8 Analyze the extract for the constituents of concern.

7.9 Repeat steps 7.4-7.8 eight additional times.

7.10 If, after completing the ninth synthetic rain extraction, the concentration of any of the constituents of concern is increasing over that found in the 7th and 8th extractions, then continue extracting with synthetic acid rain until the concentration in the extract ceases to increase.

7.11 Report the initial and final pH of each extraction and the concentration of each listed constituent of concern in each extract.

8.0 QUALITY CONTROL

8.1 All quality control data should be maintained and available for easy reference or inspection.

8.2 Employ a minimum of one blank per sample batch to determine if contamination or any memory effects are occurring.

8.3 All quality control measures suggested in the referenced analytical methods should be followed.

9.0 METHOD PERFORMANCE

9.1 No data provided.

10.0 REFERENCES

10.1 None required.

METHOD 1320

MULTIPLE EXTRACTION PROCEDURE

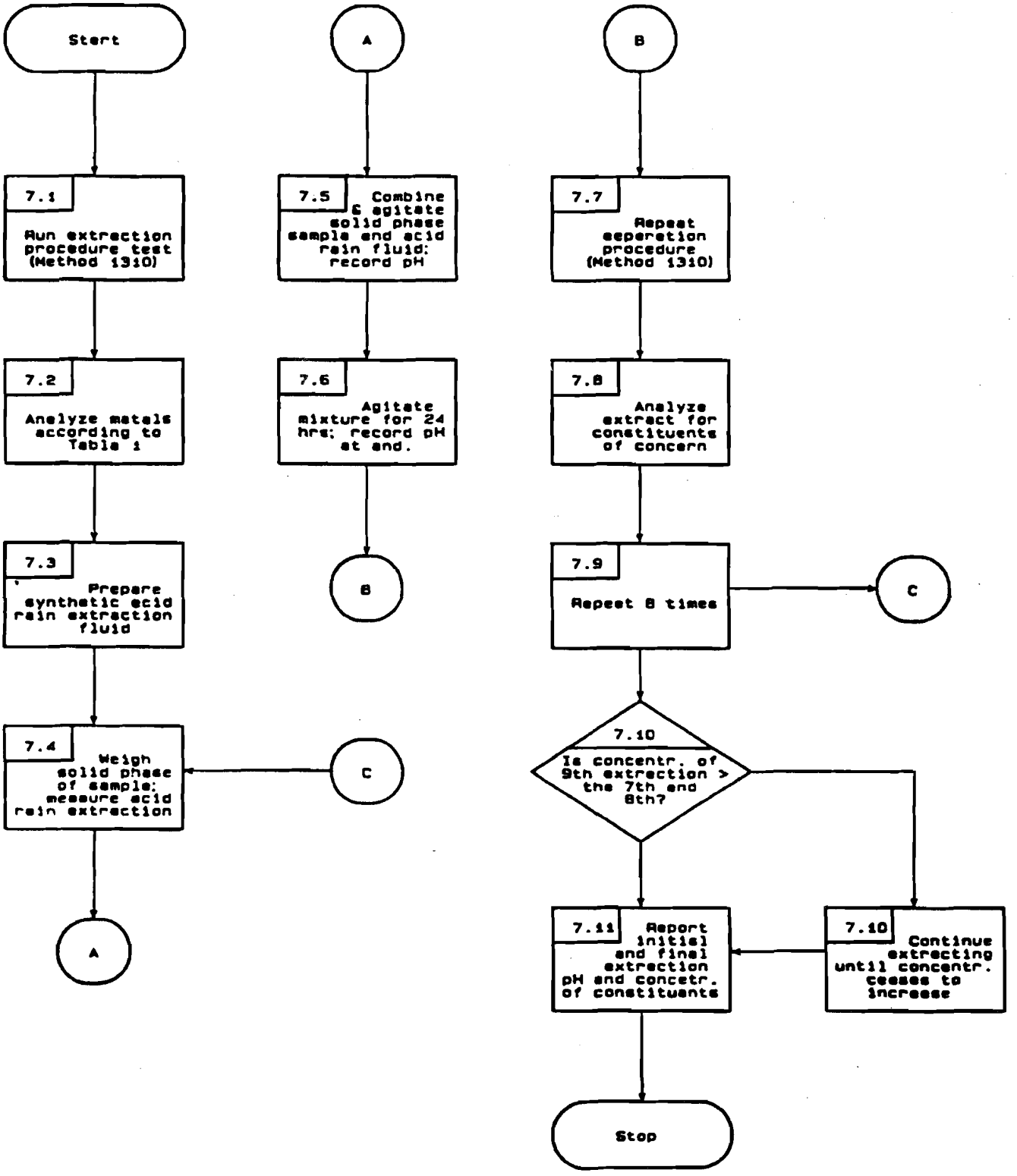

Revision 0
Date September 1986

METHOD 1330A

EXTRACTION PROCEDURE FOR OILY WASTES

1.0 SCOPE AND APPLICATION

1.1 Method 1330 is used to determine the mobile metal concentration (MMC) in oily wastes.

1.2 Method 1330 is applicable to API separator sludges, rag oils, slop oil emulsions, and other oil wastes derived from petroleum refining.

2.0 SUMMARY OF METHOD

2.1 The sample is separated into solid and liquid components by filtration.

2.2 The solid phase is placed in a Soxhlet extractor, charged with tetrahydrofuran, and extracted. The THF is removed, the extractor is then charged with toluene, and the sample is reextracted.

2.3 The EP method (Method 1310) is run on the dry solid residue.

2.4 The original liquid, combined extracts, and EP leachate are analyzed for the EP metals.

3.0 INTERFERENCES

3.1 Matrix interferences will be coextracted from the sample. The extent of these interferences will vary considerably from waste to waste, depending on the nature and diversity of the particular refinery waste being analyzed.

4.0 APPARATUS AND MATERIALS

4.1 Soxhlet extraction apparatus.

4.2 Vacuum pump or other source of vacuum.

4.3 Buchner funnel 12.

4.4 Electric heating mantle.

4.5 Paper extraction thimble.

4.6 Filter paper.

4.7 Muslin cloth disks.

4.8 Evaporative flask - 250-mL.

4.9 Balance - Analytical, capable of weighing to $\pm$ 0.5 mg.

5.0 REAGENTS

5.1 Reagent grade chemicals shall be used in all tests. Unless otherwise indicated, it is intended that all reagents shall conform to the specifications of the Committee on Analytical Reagents of the American Chemical Society, where such specifications are available. Other grades may be used, provided it is first ascertained that the reagent is of sufficiently high purity to permit its use without lessening the accuracy of the determination.

5.2 Reagent water. All references to water in this method refer to reagent water, as defined in Chapter One.

5.3 Tetrahydrofuran, C_4H_8O.

5.4 Toluene, $C_6H_5CH_3$.

6.0 SAMPLE COLLECTION, PRESERVATION, AND HANDLING

6.1 Samples must be collected in glass containers having a total volume of at least 150 mL. No solid material should interfere with sealing the sample container.

6.2 Sampling devices should be wiped clean with paper towels or absorbent cloth, rinsed with a small amount of hexane followed by acetone rinse, and dried between samples. Alternatively, samples can be taken with disposable sampling devices in beakers.

7.0 PROCEDURE

7.1 Separate the sample (minimum 100 g) into its solid and liquid components. The liquid component is defined as that portion of the sample which passes through a 0.45 μm filter media under a pressure differential of 75 psi.

7.2 Determine the quantity of liquid (mL) and the concentration of the toxicants of concern in the liquid phase (mg/L).

7.3 Place the solid phase into a Soxhlet extractor, charge the concentration flask with 300 mL tetrahydrofuran, and extract for 3 hours.

7.4 Remove the flask containing tetrahydrofuran and replace it with one containing 300 mL toluene.

7.5 Extract the solid a second time, for 3 hours, with the toluene.

7.6 Combine the tetrahydrofuran and toluene extracts.

7.7 Analyze the combined extracts for the toxicants of concern.

7.8 Determine the quantity of liquid (mL) and the concentration of the toxicants of concern in the combined extracts (mg/L).

7.9 Take the solid material remaining in the Soxhlet thimble and dry it at 100°C for 30 minutes.

7.10 Run the EP (Method 1310) on the dried solid.

7.11 Calculate the mobile metal concentration (MMC) in mg/L using the following formula:

$$MMC = 1{,}000 \times \frac{(Q_1 + Q_2 + Q_3)}{(L_1 + L_2 + L_3)}$$

where:

Q_1 = Mass of toxicant in initial liquid phase of sample (amount of liquid x concentration of toxicant) (mg).

Q_2 = Mass of toxicant in combined organic extracts of sample (amount of liquid x concentration of toxicant) (mg).

Q_3 = Mass of toxicant in EP extract of solid (amount of extract x concentration of toxicant) (mg).

L_1 = Volume of initial liquid (mL).

L_2 = Volume of liquid in THF and toluene extract (Step 7.8) (mL).

L_3 = Volume of liquid in EP (mL) = 20 x [weight of dried solid from Step 7.9 (g)].

8.0 QUALITY CONTROL

8.1 Any reagent blanks or replicates samples should be subjected to exactly the same analytical procedures as those used on actual samples.

8.2 Refer to Chapter One for specific quality control procedures.

9.0 METHOD PERFORMANCE

9.1 No data provided.

10.0 REFERENCES

1. Rohrbough, W.G.; et al. Reagent Chemicals, American Chemical Society Specifications, 7th ed.; American Chemical Society: Washington, DC, 1986.

2. 1985 Annual Book of ASTM Standards, Vol. 11.01; "Standard Specification for Reagent Water"; ASTM: Philadelphia, PA, 1985; D1193-77.

Figure 1. Extractor

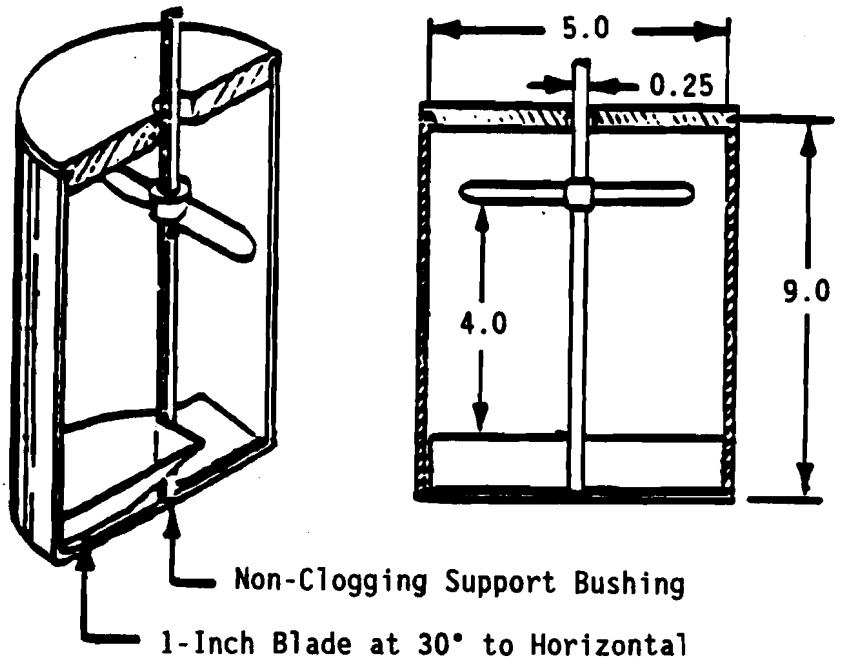

Figure 2. Rotary Extractor

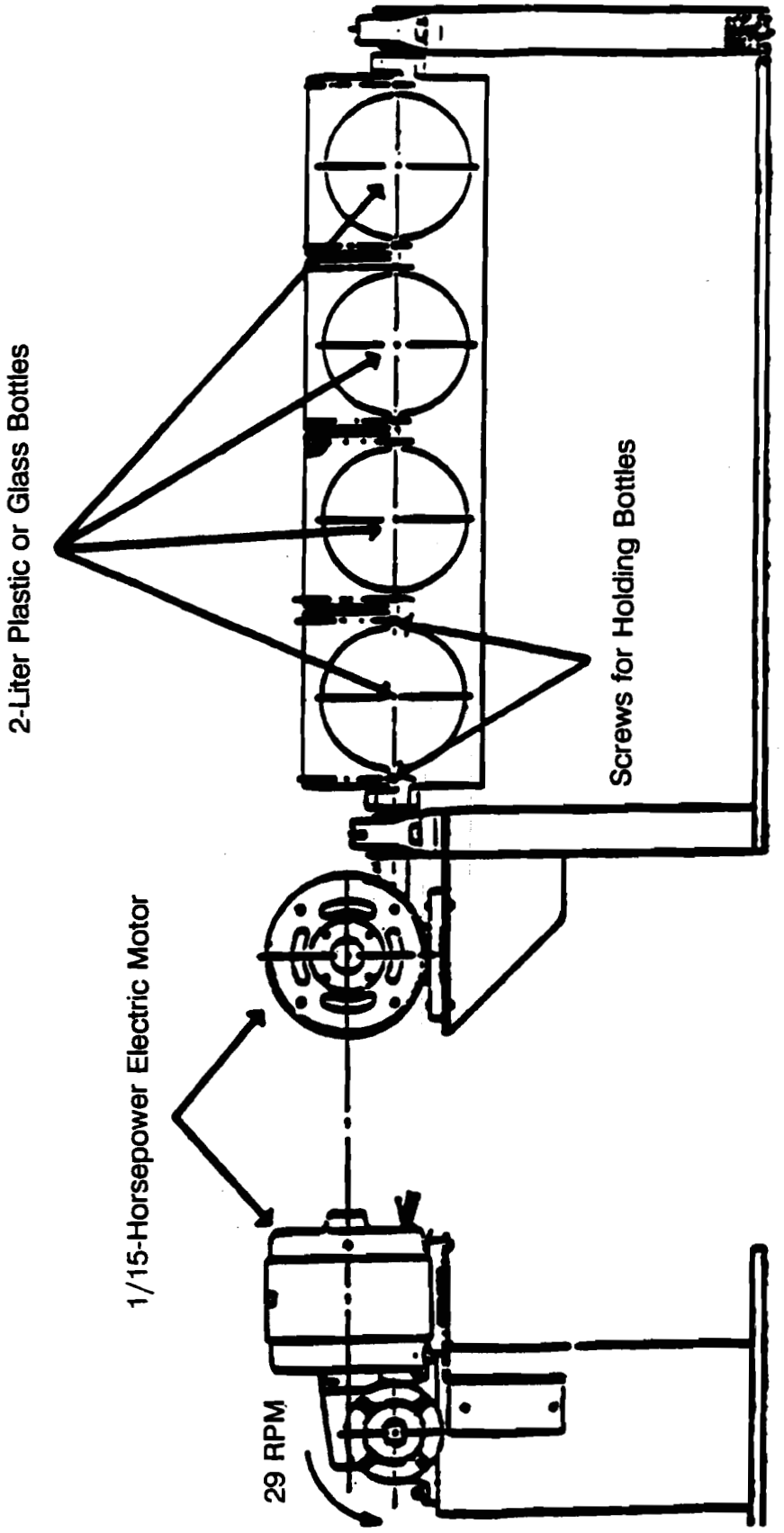

Figure 3. EPRI Extractor

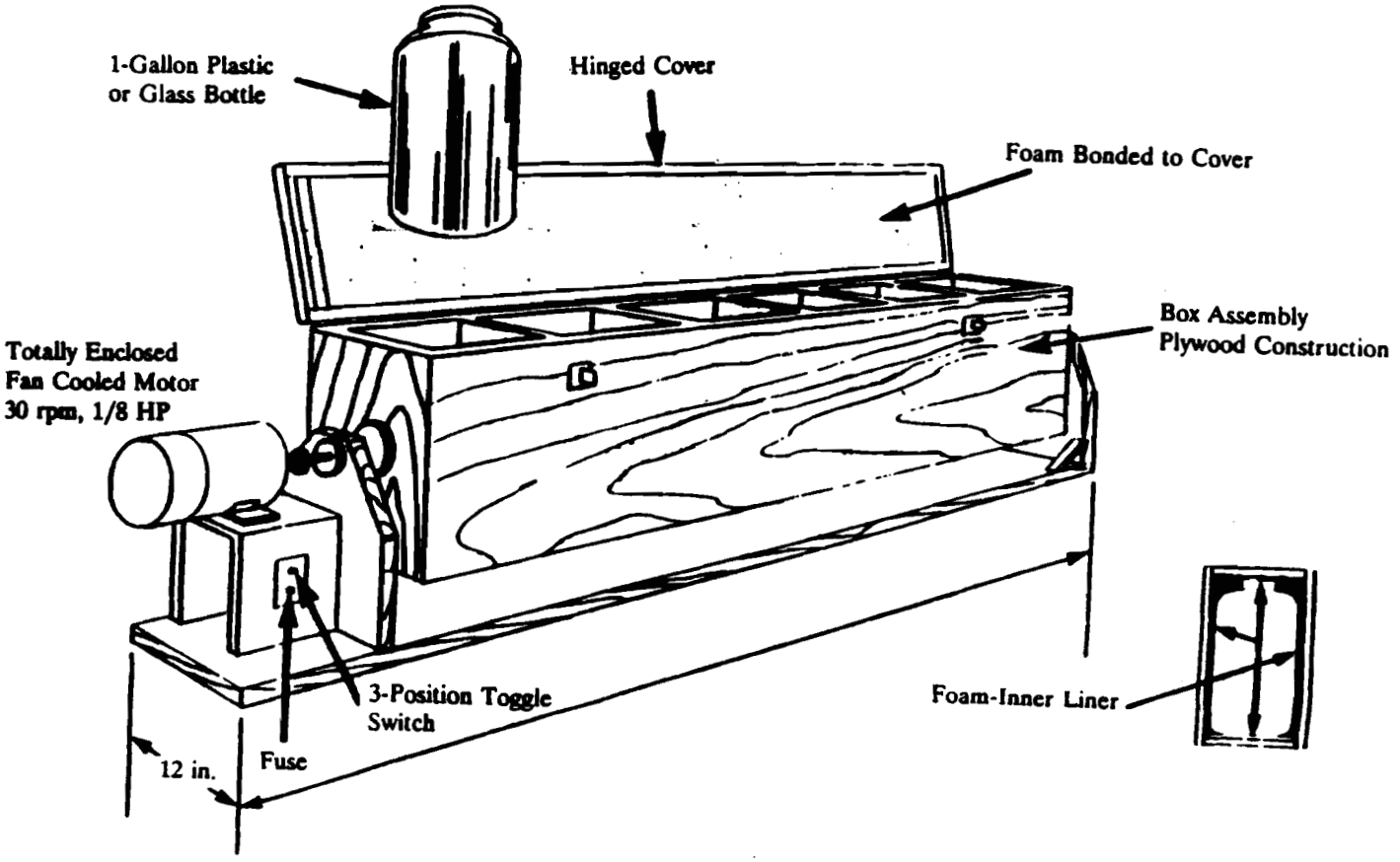

Figure 4. Compaction Tester

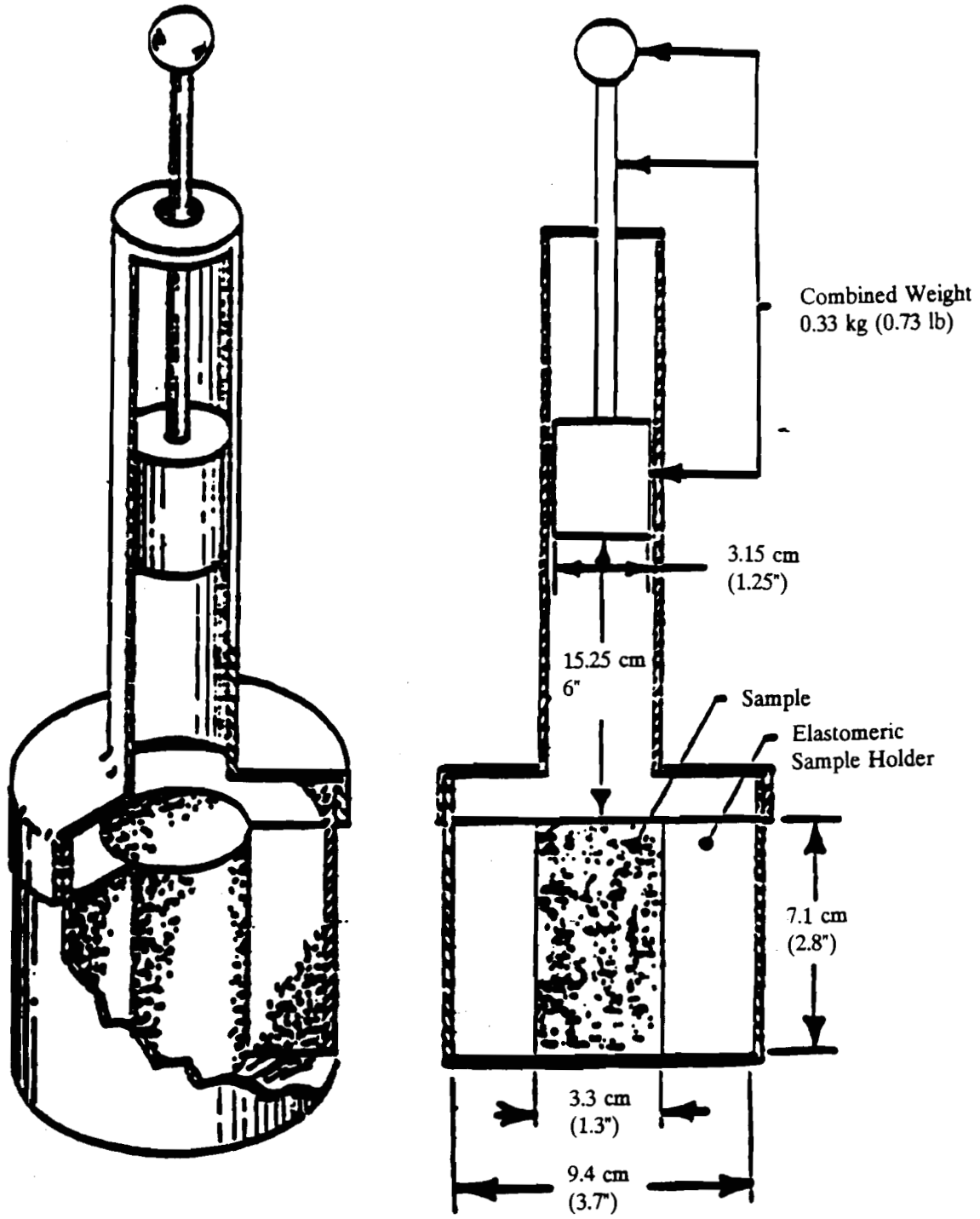

METHOD 1330A
EXTRACTION PROCEDURE FOR OILY WASTE

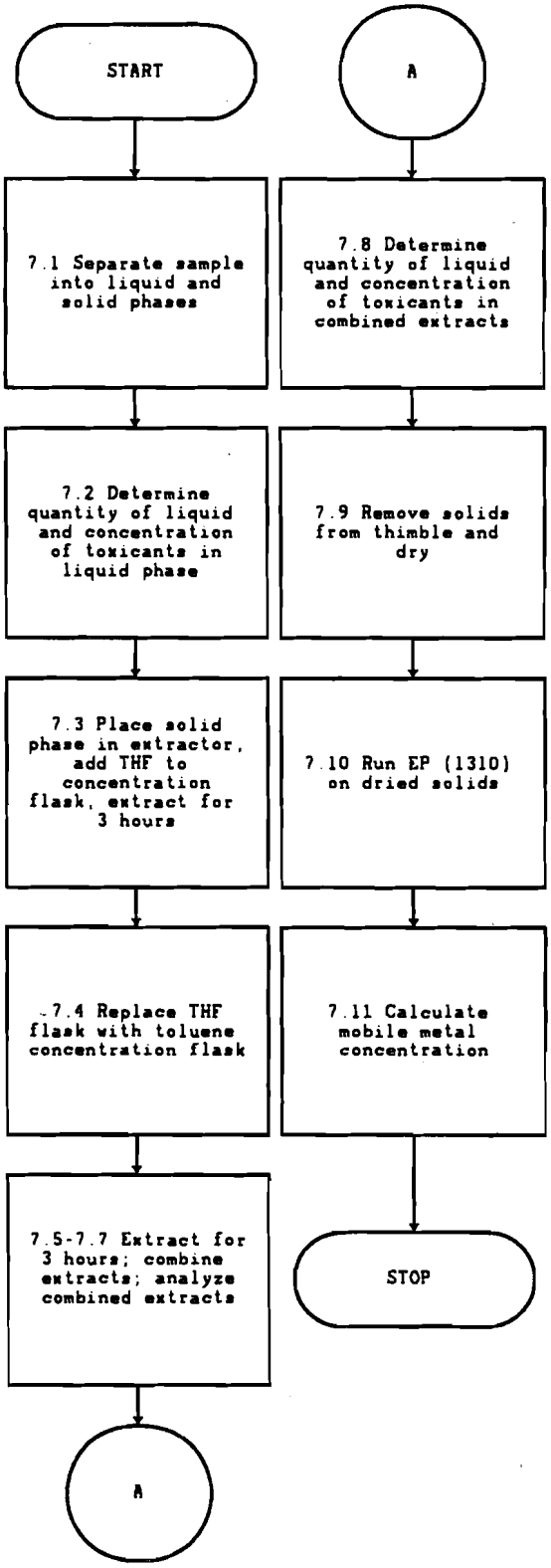

METHOD 9040B

pH ELECTROMETRIC MEASUREMENT

1.0 SCOPE AND APPLICATION

1.1 Method 9040 is used to measure the pH of aqueous wastes and those multiphase wastes where the aqueous phase constitutes at least 20% of the total volume of the waste.

1.2 The corrosivity of concentrated acids and bases, or of concentrated acids and bases mixed with inert substances, cannot be measured. The pH measurement requires some water content.

2.0 SUMMARY

2.1 The pH of the sample is determined electrometrically using either a glass electrode in combination with a reference potential or a combination electrode. The measuring device is calibrated using a series of standard solutions of known pH.

3.0 INTERFERENCES

3.1 The glass electrode, in general, is not subject to solution interferences from color, turbidity, colloidal matter, oxidants, reductants, or moderate (<0.1 molar solution) salinity.

3.2 Sodium error at pH levels >10 can be reduced or eliminated by using a low-sodium-error electrode.

3.3 Coatings of oily material or particulate matter can impair electrode response. These coatings can usually be removed by gentle wiping or detergent washing, followed by rinsing with distilled water. An additional treatment with hydrochloric acid (1:10) may be necessary to remove any remaining film.

3.4 Temperature effects on the electrometric determination of pH arise from two sources. The first is caused by the change in electrode output at various temperatures. This interference should be controlled with instruments having temperature compensation or by calibrating the electrode-instrument system at the temperature of the samples. The second source of temperature effects is the change of pH due to changes in the sample as the temperature changes. This error is sample-dependent and cannot be controlled. It should, therefore, be noted by reporting both the pH and temperature at the time of analysis.

4.0 APPARATUS AND MATERIALS

4.1 pH meter: Laboratory or field model. Many instruments are commercially available with various specifications and optional equipment.

4.2 Glass electrode.

4.3 Reference electrode: A silver-silver chloride or other reference electrode of constant potential may be used.

NOTE: Combination electrodes incorporating both measuring and referenced functions are convenient to use and are available with solid, gel-type filling materials that require minimal maintenance.

4.4 Magnetic stirrer and Teflon-coated stirring bar.

4.5 Thermometer and/or temperature sensor for automatic compensation.

5.0 REAGENTS

5.1 Reagent grade chemicals shall be used in all tests. Unless otherwise indicated, it is intended that all reagents shall conform to the specifications of the Committee on Analytical Reagents of the American Chemical Society, where such specifications are available. Other grades may be used, provided it is first ascertained that the reagent is of sufficiently high purity to permit its use without lessening the accuracy of the determination.

5.2 Primary standard buffer salts are available from the National Institute of Standards and Technology (NIST) and should be used in situations where extreme accuracy is necessary. Preparation of reference solutions from these salts requires some special precautions and handling, such as low-conductivity dilution water, drying ovens, and carbon-dioxide-free purge gas. These solutions should be replaced at least once each month.

5.3 Secondary standard buffers may be prepared from NIST salts or purchased as solutions from commercial vendors. These commercially available solutions have been validated by comparison with NIST standards and are recommended for routine use.

6.0 SAMPLE COLLECTION, PRESERVATION, AND HANDLING

6.1 All samples must be collected using a sampling plan that addresses the considerations discussed in Chapter Nine of this manual.

6.2 Samples should be analyzed as soon as possible.

7.0 PROCEDURE

7.1 Calibration:

7.1.1 Because of the wide variety of pH meters and accessories, detailed operating procedures cannot be incorporated into this method. Each analyst must be acquainted with the operation of each system and familiar with all instrument functions. Special attention to care of the electrodes is recommended.

7.1.2 Each instrument/electrode system must be calibrated at a minimum of two points that bracket the expected pH of the samples and are approximately three pH units or more apart. (For corrosivity characterization, the calibration of the pH meter should include a buffer of pH 2 for acidic wastes and a pH 12 buffer for caustic wastes; also, for

corrosivity characterization, the sample must be measured at 25±1°C if the pH of the waste is above 12.0.) Various instrument designs may involve use of a dial (to "balance" or "standardize") or a slope adjustment, as outlined in the manufacturer's instructions. Repeat adjustments on successive portions of the two buffer solutions until readings are within 0.05 pH units of the buffer solution value.

7.2 Place the sample or buffer solution in a clean glass beaker using a sufficient volume to cover the sensing elements of the electrodes and to give adequate clearance for the magnetic stirring bar. If field measurements are being made, the electrodes may be immersed directly into the sample stream to an adequate depth and moved in a manner to ensure sufficient sample movement across the electrode-sensing element as indicated by drift-free readings (<0.1 pH).

7.3 If the sample temperature differs by more than 2°C from the buffer solution, the measured pH values must be corrected. Instruments are equipped with automatic or manual compensators that electronically adjust for temperature differences. Refer to manufacturer's instructions.

7.4 Thoroughly rinse and gently wipe the electrodes prior to measuring pH of samples. Immerse the electrodes into the sample beaker or sample stream and gently stir at a constant rate to provide homogeneity and suspension of solids. Note and record sample pH and temperature. Repeat measurement on successive aliquots of sample until values differ by <0.1 pH units. Two or three volume changes are usually sufficient.

8.0 QUALITY CONTROL

8.1 Refer to Chapter One for the appropriate QC protocols.

8.2 Electrodes must be thoroughly rinsed between samples.

9.0 METHOD PERFORMANCE

9.1 Forty-four analysts in twenty laboratories analyzed six synthetic water samples containing exact increments of hydrogen-hydroxyl ions, with the following results:

		Accuracy as	
pH Units	Standard Deviation pH Units	Bias %	Bias pH Units
3.5	0.10	-0.29	-0.01
3.5	0.11	-0.00	
7.1	0.20	+1.01	+0.07
7.2	0.18	-0.03	-0.002
8.0	0.13	-0.12	-0.01
8.0	0.12	+0.16	+0.01

10.0 REFERENCES

1. National Bureau of Standards, Standard Reference Material Catalog 1986-87, Special Publication 260.

METHOD 9040B
pH ELECTROMETRIC MEASUREMENT

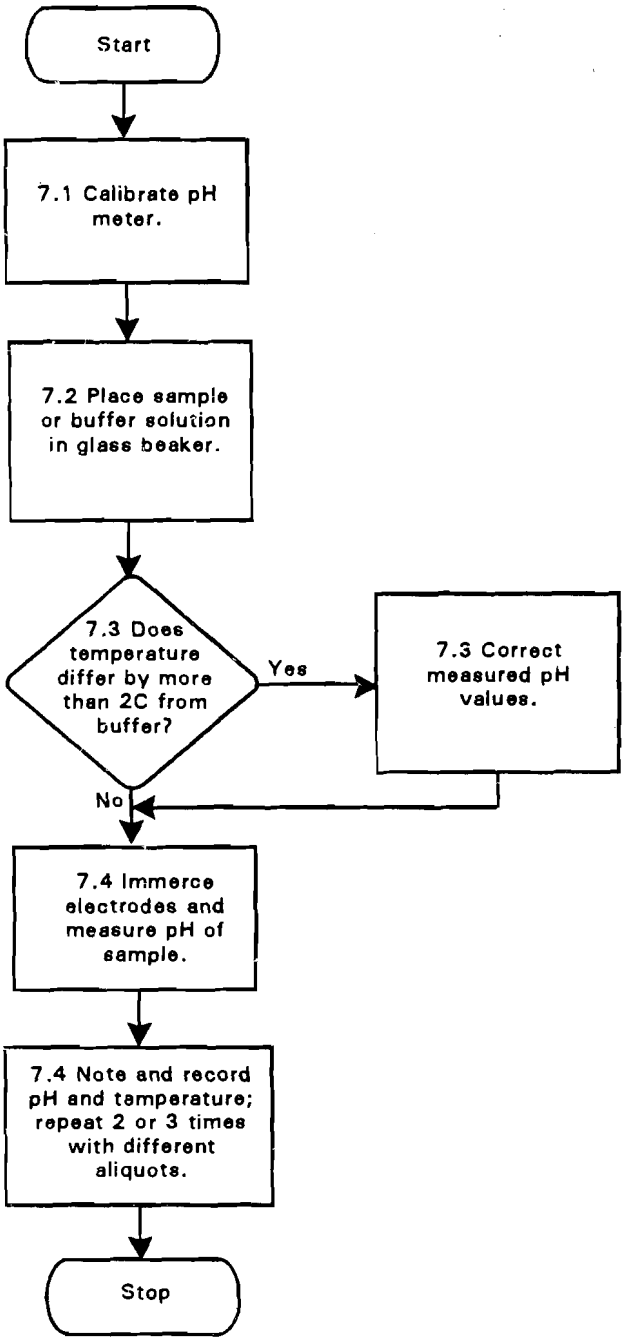

METHOD 9041A

pH PAPER METHOD

1.0 SCOPE AND APPLICATION

1.1 Method 9041 may be used to measure pH as an alternative to Method 9040 (except as noted in Step 1.3) or in cases where pH measurements by Method 9040 are not possible.

1.2 Method 9041 is not applicable to wastes that contain components that may mask or alter the pH paper color change.

1.3 pH paper is not considered to be as accurate a form of pH measurement as pH meters. For this reason, pH measurements taken with Method 9041 cannot be used to define a waste as corrosive or noncorrosive (see RCRA regulations 40 CFR §261.22(a)(1).

2.0 SUMMARY OF METHOD

2.1 The approximate pH of the waste is determined with wide-range pH paper. Then a more accurate pH determination is made using "narrow-range" pH paper whose accuracy has been determined (1) using a series of buffers or (2) by comparison with a calibrated pH meter.

3.0 INTERFERENCES

3.1 Certain wastes may inhibit or mask changes in the pH paper. This interference can be determined by adding small amounts of acid or base to a small aliquot of the waste and observing whether the pH paper undergoes the appropriate changes.

CAUTION: THE ADDITION OF ACID OR BASE TO WASTES MAY RESULT IN VIOLENT REACTIONS OR THE GENERATION OF TOXIC FUMES (e.g., hydrogen cyanide). Thus, a decision to take this step requires some knowledge of the waste. See Step 7.3.3 for additional precautions.

4.0 APPARATUS AND MATERIALS

4.1 Wide-range pH paper.

4.2 Narrow-range pH paper: With a distinct color change for every 0.5 pH unit (e.g., Alkaacid Full-Range pH Kit, Fisher Scientific or equivalent). Each batch of narrow-range pH paper must be calibrated versus certified pH buffers or by comparison with a pH meter which has been calibrated with certified pH buffers. If the incremental reading of the narrow-range pH paper is within 0.5 pH units, then the agreement between the buffer or the calibrated pH meter with the paper must be within 0.5 pH units.

4.3 pH Meter (optional).

5.0 REAGENTS

5.1 Certified pH buffers: To be used for calibrating the pH paper or for calibrating the pH meter that will be used subsequently to calibrate the pH paper.

5.2 Dilute acid (e.g., 1:4 HCl).

5.3 Dilute base (e.g., 0.1 N NaOH).

6.0 SAMPLE COLLECTION, PRESERVATION, AND HANDLING

6.1 All samples must be collected using a sampling plan which addresses the considerations discussed in Chapter Nine of this manual.

7.0 PROCEDURE

7.1 A representative aliquot of the waste must be tested with wide-range pH paper to determine the approximate pH.

7.2 The appropriate narrow-range pH paper is chosen and the pH of a second aliquot of the waste is determined. This measurement should be performed in duplicate.

7.3 Identification of interference:

7.3.1 Take a third aliquot of the waste, approximately 2 mL in volume, and add acid dropwise until a pH change is observed. Note the color change.

7.3.2 Add base dropwise to a fourth aliquot and note the color change. (Wastes that have a buffering capacity may require additional acid or base to result in a measurable pH change.)

7.3.3 The observation of the appropriate color change is a strong indication that no interferences have occurred.

CAUTION ADDITION OF ACID OR BASE TO SAMPLES MAY RESULT IN VIOLENT REACTIONS OR THE GENERATION OF TOXIC FUMES. PRECAUTIONS MUST BE TAKEN. THE ANALYST SHOULD PERFORM THESE TESTS IN A WELL-VENTILATED HOOD WHEN DEALING WITH UNKNOWN SAMPLES.

8.0 QUALITY CONTROL

8.1 All quality control data must be maintained and available for easy reference or inspection.

8.2 All pH determinations must be performed in duplicate.

8.3 Each batch of pH paper must be calibrated versus certified pH buffers or a pH meter which has been calibrated with certified pH buffers.

9.0 METHOD PERFORMANCE

9.1 No data provided.

10.0 REFERENCES

10.1 None required.

METHOD 9041A

pH PAPER METHOD

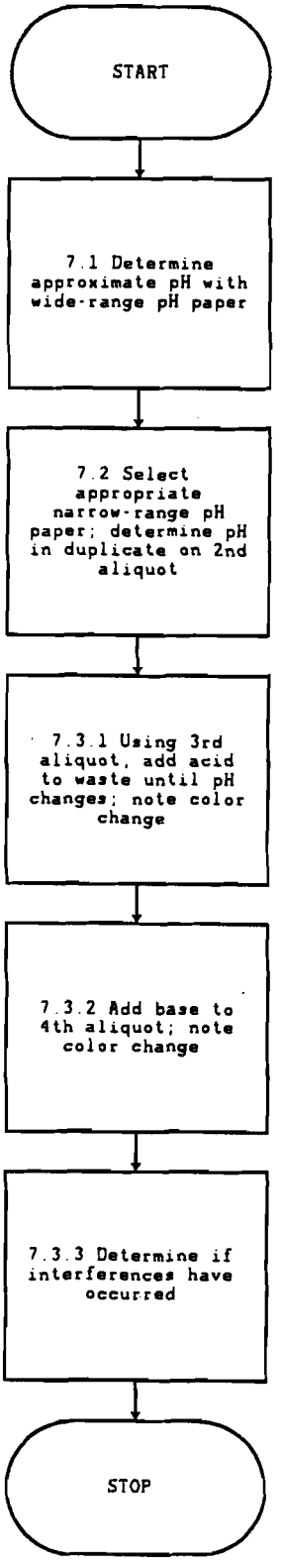

METHOD 9045C

SOIL AND WASTE pH

1.0 SCOPE AND APPLICATION

1.1 Method 9045 is an electrometric procedure for measuring pH in soils and waste samples. Wastes may be solids, sludges, or non-aqueous liquids. If water is present, it must constitute less than 20% of the total volume of the sample.

2.0 SUMMARY OF METHOD

2.1 The sample is mixed with reagent water, and the pH of the resulting aqueous solution is measured.

3.0 INTERFERENCES

3.1 Samples with very low or very high pH may give incorrect readings on the meter. For samples with a true pH of >10, the measured pH may be incorrectly low. This error can be minimized by using a low-sodium-error electrode. Strong acid solutions, with a true pH of <1, may give incorrectly high pH measurements.

3.2 Temperature fluctuations will cause measurement errors.

3.3 Errors will occur when the electrodes become coated. If an electrode becomes coated with an oily material that will not rinse free, the electrode can (1) be cleaned with an ultrasonic bath, or (2) be washed with detergent, rinsed several times with water, placed in 1:10 HCl so that the lower third of the electrode is submerged, and then thoroughly rinsed with water, or (3) be cleaned per the manufacturer's instructions.

4.0 APPARATUS AND MATERIALS

4.1 pH Meter with means for temperature compensation.

4.2 Glass Electrode.

4.3 Reference electrode: A silver-silver chloride or other reference electrode of constant potential may be used.

> NOTE: Combination electrodes incorporating both measuring and referenced functions are convenient to use and are available with solid, gel-type filling materials that require minimal maintenance.

4.4 Beaker: 50-mL.

4.5 Thermometer and/or temperature sensor for automatic compensation.

4.6 Analytical balance: capable of weighing 0.1 g.

5.0 REAGENTS

5.1 Reagent grade chemicals shall be used in all tests. Unless otherwise indicated, it is intended that all reagents shall conform to the specifications of the Committee on Analytical Reagents of the American Chemical Society, where such specifications are available. Other grades may be used, provided it is first ascertained that the reagent is of sufficiently high purity to permit its use without lessening the accuracy of the determination.

5.2 Reagent water. All references to water in this method refer to reagent water, as defined in Chapter One.

5.3 Primary standard buffer salts are available from the National Institute of Standards and Technology (NIST) and should be used in situations where extreme accuracy is necessary. Preparation of reference solutions from these salts requires some special precautions and handling, such as low-conductivity dilution water, drying ovens, and carbon-dioxide-free purge gas. These solutions should be replaced at least once each month.

5.4 Secondary standard buffers may be prepared from NIST salts or purchased as solutions from commercial vendors. These commercially available solutions, which have been validated by comparison with NIST standards, are recommended for routine use.

6.0 SAMPLE PRESERVATION AND HANDLING

6.1 All samples must be collected using a sampling plan that addresses the considerations discussed in Chapter Nine of this manual.

6.2 Samples should be analyzed as soon as possible.

7.0 PROCEDURE

7.1 Calibration:

7.1.1 Because of the wide variety of pH meters and accessories, detailed operating procedures cannot be incorporated into this method. Each analyst must be acquainted with the operation of each system and familiar with all instrument functions. Special attention to care of the electrodes is recommended.

7.1.2 Each instrument/electrode system must be calibrated at a minimum of two points that bracket the expected pH of the samples and are approximately three pH units or more apart. Repeat adjustments on successive portions of the two buffer solutions until readings are within 0.05 pH units of the buffer solution value. If an accurate pH reading based on the conventional pH scale [0 to 14 at 25°C] is required, the analyst should control sample temperature at 25±1°C when sample pH approaches the alkaline end of the scale (e.g., a pH of 11 or above).

7.2 Sample preparation and pH measurement of soils:

7.2.1 To 20 g of soil in a 50-mL beaker, add 20 mL of reagent water, cover, and continuously stir the suspension for 5 minutes. Additional dilutions are allowed if working with hygroscopic soils and salts or other problematic matrices.

7.2.2 Let the soil suspension stand for about 1 hour to allow most of the suspended clay to settle out from the suspension or filter or centrifuge off the aqueous phase for pH measurement.

7.2.3 Adjust the electrodes in the clamps of the electrode holder so that, upon lowering the electrodes into the beaker, the glass electrode will be immersed just deep enough into the clear supernatant solution to establish a good electrical contact through the ground-glass joint or the fiber-capillary hole. Insert the electrodes into the sample solution in this manner. For combination electrodes, immerse just below the suspension.

7.2.4 If the sample temperature differs by more than 2°C from the buffer solution, the measured pH values must be corrected.

7.2.5 Report the results as "soil pH measured in water at __ °C" where "__°C" is the temperature at which the test was conducted.

7.3 Sample preparation and pH measurement of waste materials:

7.3.1 To 20 g of waste sample in a 50-mL beaker, add 20 mL of reagent water, cover, and continuously stir the suspension for 5 minutes. . Additional dilutions are allowed if working with hygroscopic wastes and salts or other problematic matrices.

7.3.2 Let the waste suspension stand for about 15 minutes to allow most of the suspended waste to settle out from the suspension or filter or centrifuge off aqueous phase for pH measurement.

> NOTE: If the waste is hygroscopic and absorbs all the reagent water, begin the experiment again using 20 g of waste and 40 mL of reagent water.

> NOTE: If the supernatant is multiphasic, decant the oily phase and measure the pH of the aqueous phase. The electrode may need to be cleaned (Step 3.3) if it becomes coated with an oily material.

7.3.3 Adjust the electrodes in the clamps of the electrode holder so that, upon lowering the electrodes into the beaker, the glass electrode will be immersed just deep enough into the clear supernatant to establish good electrical contact through the ground-glass joint or the fiber-capillary hole. Insert the electrode into the sample solution in this manner. For combination electrodes, immerse just below the suspension.

7.3.4 If the sample temperature differs by more than 2°C from the buffer solution, the measured pH values must be corrected.

7.3.5 Report the results as "waste pH measured in water at __ °C" where "__°C" is the temperature at which the test was conducted.

8.0 QUALITY CONTROL

8.1 Refer to Chapter One for the appropriate QC protocols.

8.2 Electrodes must be thoroughly rinsed between samples.

9.0 METHOD PERFORMANCE

9.1 No data provided.

10.0 REFERENCES

1. Black, Charles Allen; Methods of Soil Analysis; American Society of Agronomy: Madison, WI, 1973.

2. National Bureau of Standards, Standard Reference Material Catalog, 1986-87, Special Publication 260.

SOIL AND WASTE pH

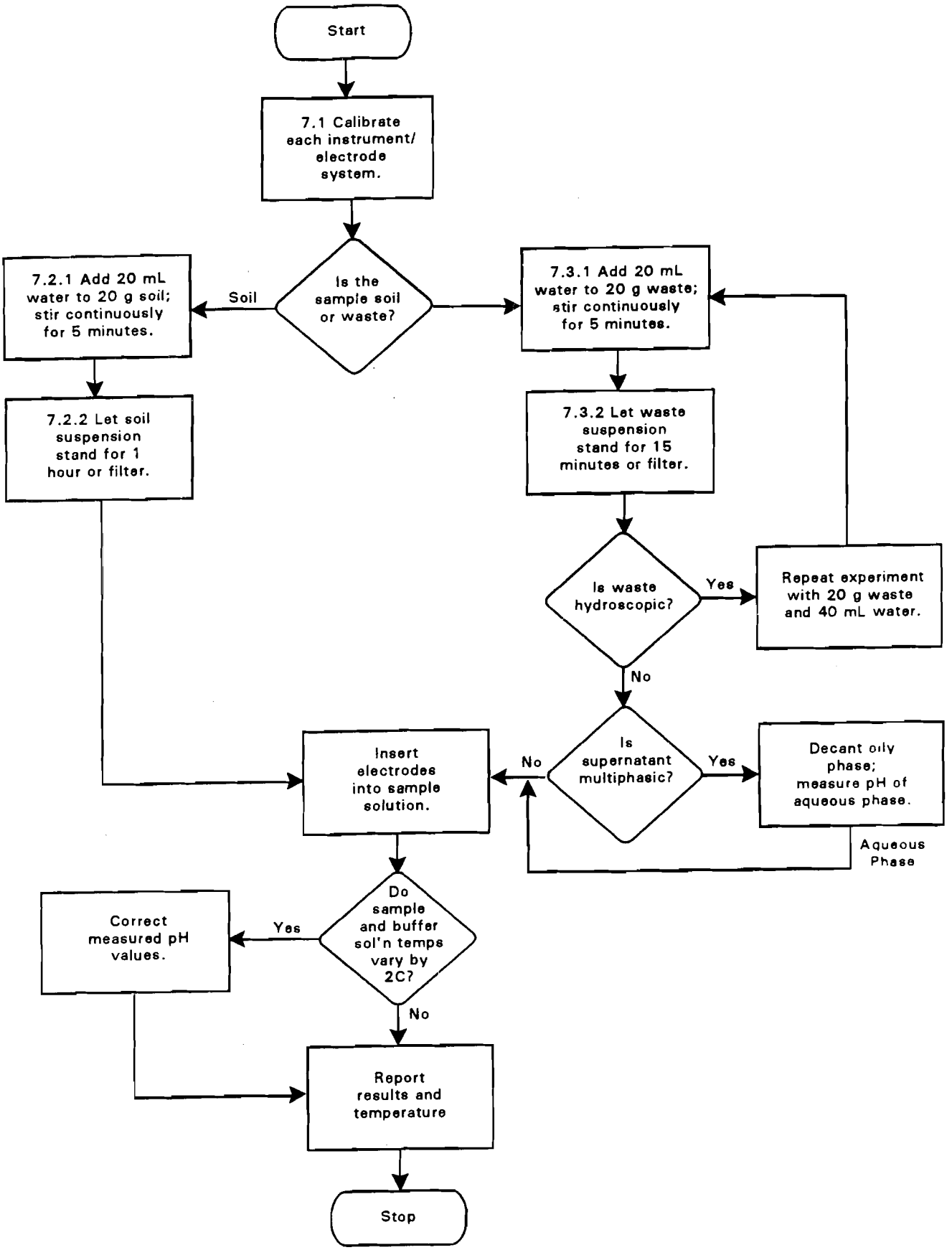

METHOD 9050

SPECIFIC CONDUCTANCE

1.0 SCOPE AND APPLICATION

1.1 Method 9050 is used to measure the specific conductance of drinking, ground, surface, and saline waters and domestic and industrial aqueous wastes. Method 9050 is not applicable to solid samples.

2.0 SUMMARY OF METHOD

2.1 The specific conductance of a sample is measured using a self-contained conductivity meter (Wheatstone bridge-type or equivalent).

2.2 Whenever possible, samples are analyzed at 25°C. If samples are analyzed at different temperatures, temperature corrections must be made and results reported at 25°C.

3.0 INTERFERENCES

3.1 Platinum electrodes can degrade and cause erratic results. When this happens, as evidenced by erratic results or flaking off of the platinum black, the electrode should be replatinized.

3.2 The specific conductance cell can become coated with oil and other materials. It is essential that the cell be thoroughly rinsed and, if necessary, cleaned between samples.

4.0 APPARATUS AND MATERIALS

4.1 Self-contained conductivity instruments: an instrument consisting of a source of alternating current, a Wheatstone bridge, null indicator, and a conductivity cell or other instrument measuring the ratio of alternating current through the cell to voltage across it. The latter has the advantage of a linear reading of conductivity. Choose an instrument capable of measuring conductivity with an error not exceeding 1% or 1 umho/cm, whichever is greater.

4.2 Platinum-electrode or non-platinum-electrode specific conductance cell.

4.3 Water bath.

4.4 Thermometer: capable of being read to the nearest 0.1°C and covering the range 23° to 27°C. An electrical thermometer having a small thermistor sensing element is convenient because of its rapid response.

5.0 REAGENTS

5.1 Conductivity water: Pass distilled water through a mixed-bed deionizer and discard first 1,000 mL. Conductivity should be less than 1 umho/cm.

5.2 Standard potassium chloride (0.0100 M): Dissolve 0.7456 g anhydrous KCl in conductivity water and make up to 1,000 mL at 25°C. This solution will have a specific conductance of 1,413 umho/cm at 25°C.

6.0 SAMPLE COLLECTION, PRESERVATION, AND HANDLING

6.1 All samples must be collected using a sampling plan that addresses the considerations discussed in Chapter Nine of this manual.

6.2 All sample containers must be prewashed and thoroughly rinsed. Both plastic and glass containers are suitable.

6.3 Aqueous samples should be stored at 4°C and analyzed within 24 hr.

7.0 PROCEDURE

7.1 Determination of cell constant: Rinse conductivity cell with at least three portions of 0.01 N KCl solution. Adjust temperature of a fourth portion to 25.0 ± 0.1°C. Measure resistance of this portion and note temperature. Compute cell constant, C:

$$C = (0.001413)(R_{KCl})\ 1 + 0.0191\ (t - 25)$$

where:

R_{KCl} = measured resistance, ohms; and

t = observed temperature, °C.

7.2 Conductivity measurement: Rinse cell with one or more portions of sample. Adjust temperature of a final portion to 25.0 ± 0.1°C. Measure sample resistance or conductivity and note temperature.

7.3 Calculation: The temperature coefficient of most waters is only approximately the same as that of standard KCl solution; the more the temperature of measurement deviates from 25.0°C, the greater the uncertainty in applying the temperature correction. Report all conductivities at 25.0°C.

7.3.1 When sample resistance is measured, conductivity at 25°C is:

$$K = \frac{(1,000,000)(C)}{R_m \quad 1 + 0.0191\ (t - 25)}$$

where:

K = conductivity, umho/cm;
C = cell constant, cm-L;
R_m = measured resistance of sample, ohms; and
t = temperature of measurement.

7.3.2 When sample conductivity is measured, conductivity at 25°C is:

$$K = \frac{(K_m)(1,000,000)(C)}{1 + 0.0191\ (t - 25)}$$

where:

K_m = measured conductivity, umho at t°C, and other units are defined as above.

NOTE: If conductivity readout is in umho/cm, delete the factor 1,000,000 in the numerator.

8.0 QUALITY CONTROL

8.1 All quality control data should be maintained and available for easy reference or inspection.

8.2 Analyze check standards after approximately every 15 samples.

8.3 Run 1 duplicate sample for every 10 samples.

9.0 METHOD PERFORMANCE

9.1 Three synthetic samples were tested with the following results:

Conductivity umhos/cm	No. of Results	Relative Standard Deviation %	Relative Error %
147.0	117	8.6	9.4
303.0	120	7.8	1.9
228.0	120	8.4	3.0

10.0 REFERENCES

1. Standard Methods for the Examination of Water and Wastewater, 16th ed. (1985), Method 205.

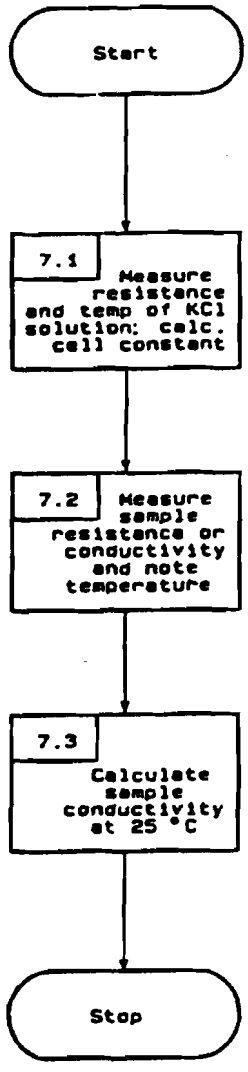
Start
7.1
Measure resistance and temp of KCl solution; calc. cell constant
7.2
Measure sample resistance or conductivity and note temperature
7.3
Calculate sample conductivity at 25 °C
Stop

METHOD 9080

CATION-EXCHANGE CAPACITY OF SOILS (AMMONIUM ACETATE)

1.0 SCOPE AND APPLICATION

1.1 Method 9080 is used to determine the cation-exchange capacity of soils. The method is not applicable to soils containing appreciable amounts of vermiculite clays, kaolin, halloysite, or other 1:1-type clay minerals. They should be analyzed by the sodium acetate method (Method 9081). That method (9081) is also generally the preferred method for very calcareous soils. For distinctly acid soils, the cation-exchange capacity by summation method (Chapman, p. 900; see Paragraph 10.1) should be employed.

2.0 SUMMARY

2.1 The soil is mixed with an excess of 1 N ammonium acetate solution. This results in an exchange of the ammonium cations for exchangeable cations present in the soil. The excess ammonium is removed, and the amount of exchangeable ammonium is determined.

3.0 INTERFERENCES

3.1 Soils containing appreciable vermiculite clays, kaolin, halloysite, or other 1:1-type clay minerals will often give lower values for exchange capacity. See Paragraph 1.1 above.

3.2 With calcareous soils, the release of calcium carbonate from the soil into the ammonium acetate solution limits the saturation of exchange sites by the ammonium ion. This results in artificially low cation-exchange capacities.

4.0 APPARATUS AND MATERIALS

4.1 Erlenmeyer flask: 500-mL.

4.2 Buchner funnel or equivalent: 55-mm.

4.3 Sieve: 2-mm.

4.4 Aeration apparatus (assembled as in Figure 1):

4.4.1 Kjeldahl flask: 800-mL.

4.4.2 Erlenmeyer flask: 800-mL.

4.4.3 Glass wool filter.

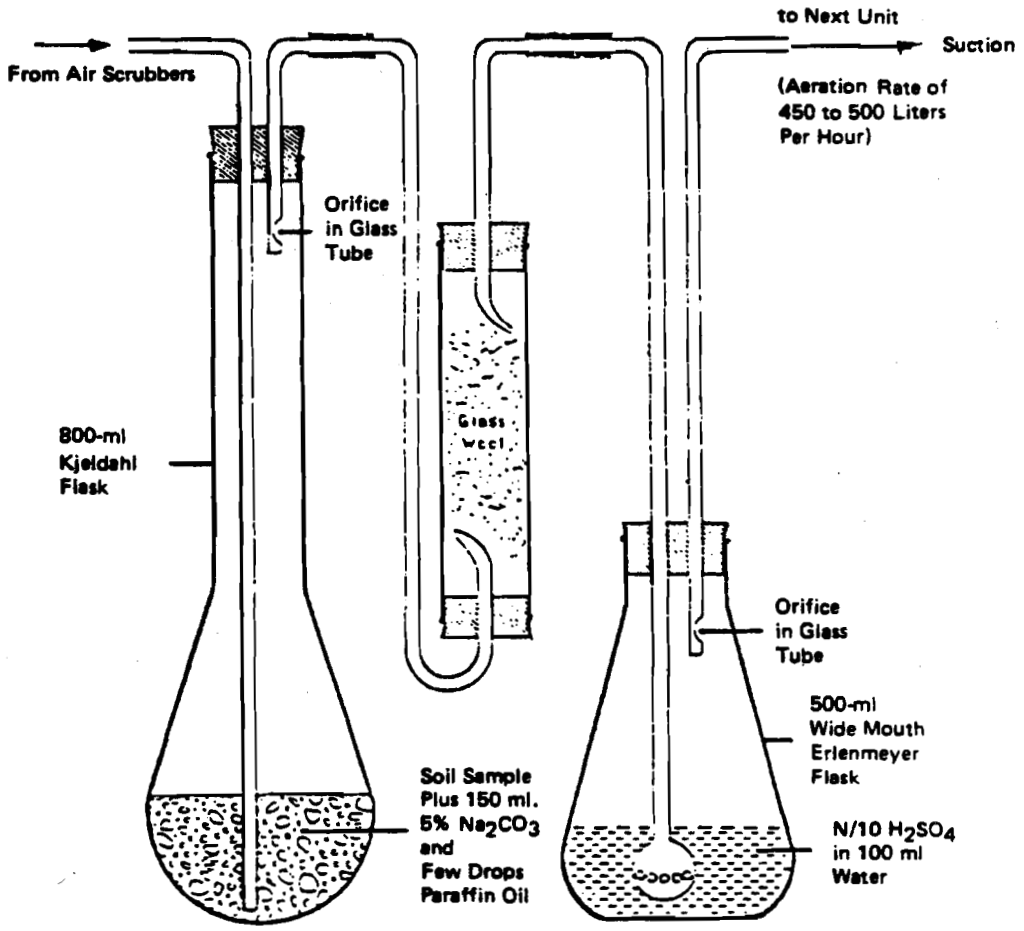

Figure 1. Diagram of aeration unit for determination of absorbed ammonia. Six to twelve such units is a convenient number for routine work; they can be mounted on a portable rack. (Apparatus as modified by Dr. A. P. Vanselow, Dept. of Soils & Plant Nutrition, Univerity of California, Riverside, Calif.).

4.4.4 **Glass tubing.**

4.4.5 **Flow meter.**

5.0 REAGENTS

5.1 Ammonium acetate (NH_4OAc), 1 N: Dilute 114 mL of glacial acetic acid (99.5%) with water to a volume of approximately 1 liter. Then add 138 mL of concentrated ammonium hydroxide (NH_4OH) and add water to obtain a volume of about 1,980 mL. Check the pH of the resulting solution, add more NH_4OH, as needed, to obtain a pH of 7, and dilute the solution to a volume of 2 liters with water.

5.2 Isopropyl alcohol: 99%.

5.3 Ammonium chloride (NH_4Cl), 1 N: Dissolve 53.49 g of NH_4Cl in Type II water, adjust the pH to 7.0 with NH_4OH, and dilute to 1 L.

5.4 Ammonium chloride (NH_4Cl), 0.25 N: Dissolve 13.37 g of NH_4Cl in Type II water, adjust the pH to 7.0 with NH_4OH, and dilute to 1 L.

5.5 Ammonium oxalate ($(NH_4)_2C_2O_4 \cdot H_2O$), 10%: Add 90 mL of Type II water to 10 g of ammonium oxalate ($(NH_4)_2C_2O_4 \cdot H_2O$) and mix well.

5.6 Dilute ammonium hydroxide (NH_4OH): Add 1 volume of concentrated NH_4OH to an equal volume of water.

5.7 Silver nitrate ($AgNO_3$), 0.10 N: Dissolve 15.39 g of $NgNO_3$ in Type II water, mix well, and dilute to 1 L.

5.8 Reagents for aeration option:

5.8.1 **Sodium carbonate solution** (Na_2CO_3), 5%: Add 95 mL of Type II water to 5 g of Na_2CO_3 and mix well.

5.8.2 **Paraffin oil.**

5.8.3 **Sulfuric acid** (H_2SO_4), 0.1 N standard: Add 2.8 mL concentrated H_2SO_4 to Type II water and dilute to 1 L. Standardize against a base of known concentration.

5.8.4 **Sodium hydroxide** (NaOH), 0.1 N standard: Dissolve 4.0 g NaOH in Type II water and dilute to 1 L. Standardize against an acid of known concentration.

5.8.5 **Methyl red indicator**, 0.1%: Dissolve 0.1 g in 99.9 mL of 95% ethanol and mix well.

5.9 Reagents for distillation option:

5.9.1 **Sodium chloride**, NaCl (acidified), 10%: Dissolve 100 g of NaCl (ammonium-free) in 900 mL of Type II water; mix well. Add approximately 0.42 mL of concentrated HCl to make the solution approximately 0.005 N.

5.9.2 **Sodium hydroxide** (NaOH), 1 N: Dissolve 40 g of NaOH in Type II water and dilute to 1 L.

5.9.3 **Boric acid** (H_3BO_3), 2% solution: Dissolve 20 g H_3BO_3 in 980 mL Type II water and mix well.

5.9.4 **Standard sulfuric acid** (H_2SO_4), 0.1 N: See Step 5.8.3.

5.9.5 **Bromocresol green-methyl red mixed indicator**: Triturate 0.1 g of bromocresol green with 2 mL 0.1 N NaOH in an agate mortar and add 95% ethyl alcohol to obtain a total volume of 100 mL. Triturate 0.1 g of methyl red with a few mL of 95% ethyl alcohol in an agate mortar. Add 3 mL of 0.1 N NaOH and dilute the solution to a volume of 100 mL with 95% ethyl alcohol. Mix 75 mL of the bromocresol green solution with 25 mL of the methyl red solution and dilute the mixture to 200 mL with 95% ethyl alcohol.

6.0 SAMPLE COLLECTION, PRESERVATION, AND HANDLING

6.1 All samples must be collected using a sampling plan that addresses the considerations discussed in Chapter Nine of this manual.

7.0 PROCEDURE

7.1 Sieve a sample aliquot of the soil through a 2-mm screen and allow the sieved soil to air dry (at a temperature of $<60°C$). Place 10 g of the air-dried soil in a 500-mL Erlenmeyer flask and add 250 mL of neutral, 1 N NH_4OAc. (Use 25 g of soil if the exchange capacity is very low, e.g., 3-5 meq per 100 g.) Shake the flask thoroughly and allow it to stand overnight.

7.2 Filter the soil with light suction using a 55-mm Buchner funnel or equivalent. Do not allow the soil to become dry and cracked.

7.3 Leach the soil with the neutral NH_4OAc reagent until no test for calcium can be obtained in the effluent solution. (For the calcium test, add a few drops each of 1 N NH_4Cl and 10% ammonium oxalate, dilute NH_4OH to 10 mL of the leachate in a test tube, and heat the solution to near the boiling point. The presence of calcium is indicated by a white precipitate or turbidity.)

7.4 Then leach the soil four times with neutral 1 N NH_4Cl and once with 0.25 N NH_4Cl.

7.5 Wash out the electrolyte with 150 to 200 mL of 99% isopropyl alcohol. When the test for chloride in the leachate (use 0.10 $AgNO_3$) becomes negligible, allow the soil to drain thoroughly.

7.6 Determine the adsorbed NH_4 either by the aeration method (Paragraph 7.7) or by the acid-NaCl method (Paragraph 7.8).

7.7 Aeration method:

7.7.1 Place an excess of 0.1 N standard H_2SO_4 in the 500-mL Erlenmeyer flask on the aeration apparatus (50 mL is an ample quantity for most soils) and add 10 drops of methyl red indicator and enough distilled water to make the total volume about 100 mL.

7.7.2 Attach the flask to the apparatus. Then transfer the ammonium-saturated sample of soil (from Paragraph 7.5) quantitatively to the 800-mL Kjeldahl flask located in the flow line just before the Erlenmeyer flask with the standard acid. Use a rubber policeman and a stream of distilled water from a wash bottle, as needed, to complete the transfer.

7.7.3 Add 150 mL Na_2CO_3 solution and a few drops of paraffin oil and attach the flask to the apparatus.

7.7.4 Apply suction to the outflow end of the apparatus and adjust the rate of flow to 450 to 500 liters of air per hr. Continue the aeration for 17 hr.

7.7.5 Shut off the suction and remove the flask. Titrate the residual acid in the absorption solutions with standard 0.1 N NaOH from the original red color through orange to yellow at the end point. From the titration values obtained with the soil and blank solutions, calculate the content of adsorbed ammonium in milligram equivalents per 100 g soil.

7.8 Acid-NaCl method:

7.8.1 Leach the ammonium-saturated soil from Paragraph 7.5 with 10% acidified NaCl until 225 mL have passed through the sample. Add small portions at a time, allowing each portion to pass through the sample before adding the next portion.

7.8.2 Transfer the leachate quantitatively to an 800-mL Kjeldahl flask, add 25 mL of 1 N NaOH, and distill 60 mL of the solution into 50 mL of 2% H_3BO_3.

7.8.3 Add 10 drops of bromocresol green-methyl red mixed indicator and titrate the boric acid solution with standard 0.1 N H_2SO_4. The color change is from bluish green through bluish purple to pink at the end point. Run blanks on the reagents. Correct the titration figure for the blanks and calculate the milliequivalents of ammonium in 100 g of soil.

7.8.4 Results should be reported as "determined with ammonium acetate" at pH 7.

8.0 QUALITY CONTROL

8.1 All quality control data should be maintained and available for easy reference or inspection.

8.2 Employ a minimum of one blank per sample batch to determine if contamination or any memory effects are occurring.

8.3 Material of known cation-exchange capacity must be routinely analyzed.

9.0 METHOD PERFORMANCE

9.1 No data provided.

10.0 REFERENCES

1. This method is based on Chapman, H.D., "Cation-exchange Capacity," pp. 891-900, in C.A. Black (ed.), Method of Soil Analysis, Part 2: Chemical and Microbiological Properties, Am. Soc. Agron., Madison, Wisconsin (1965).

METHOD 9080

CATION-EXCHANGE CAPACITY (AMMONIUM ACETATE)

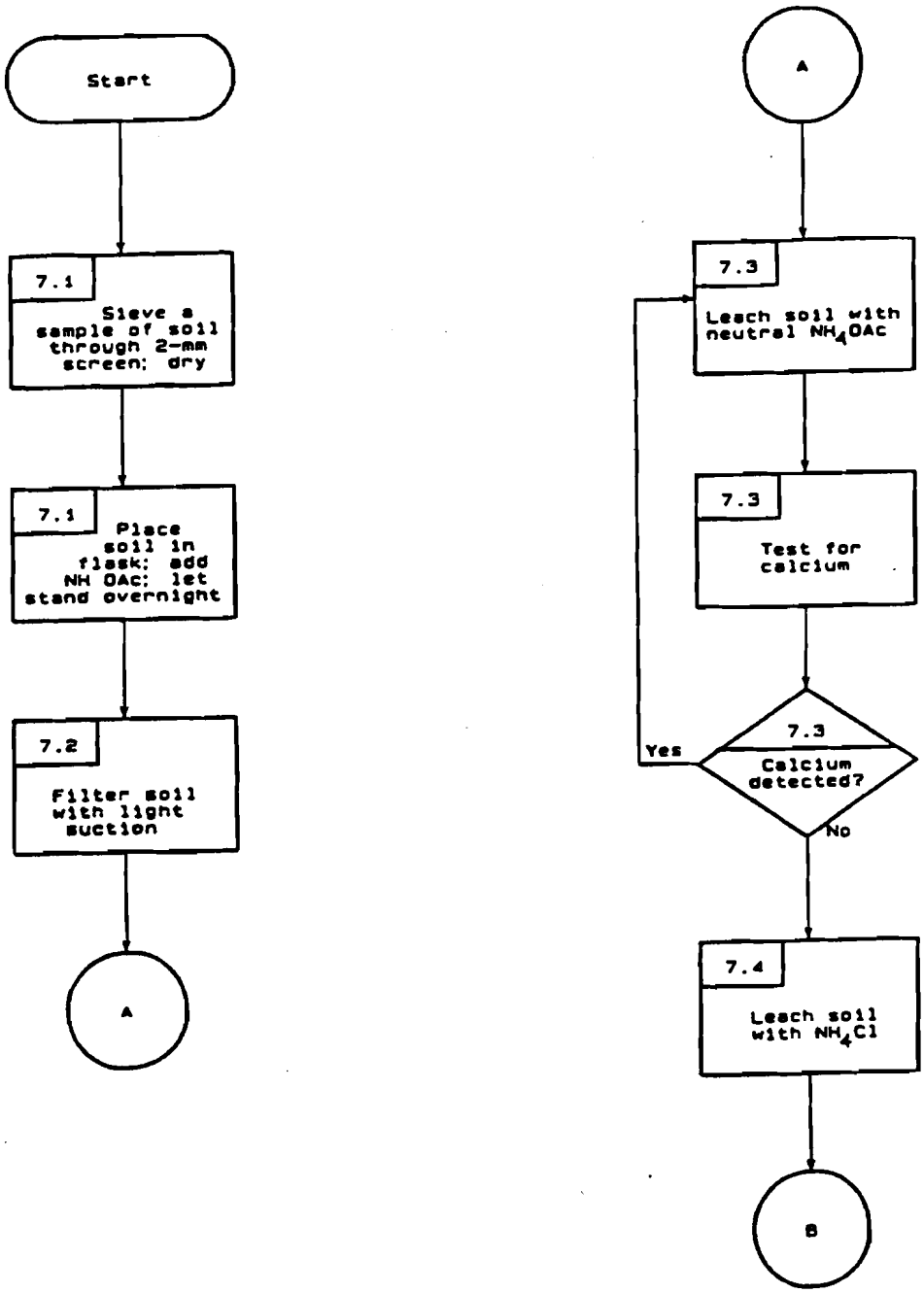

Revision 0
Date September 1986

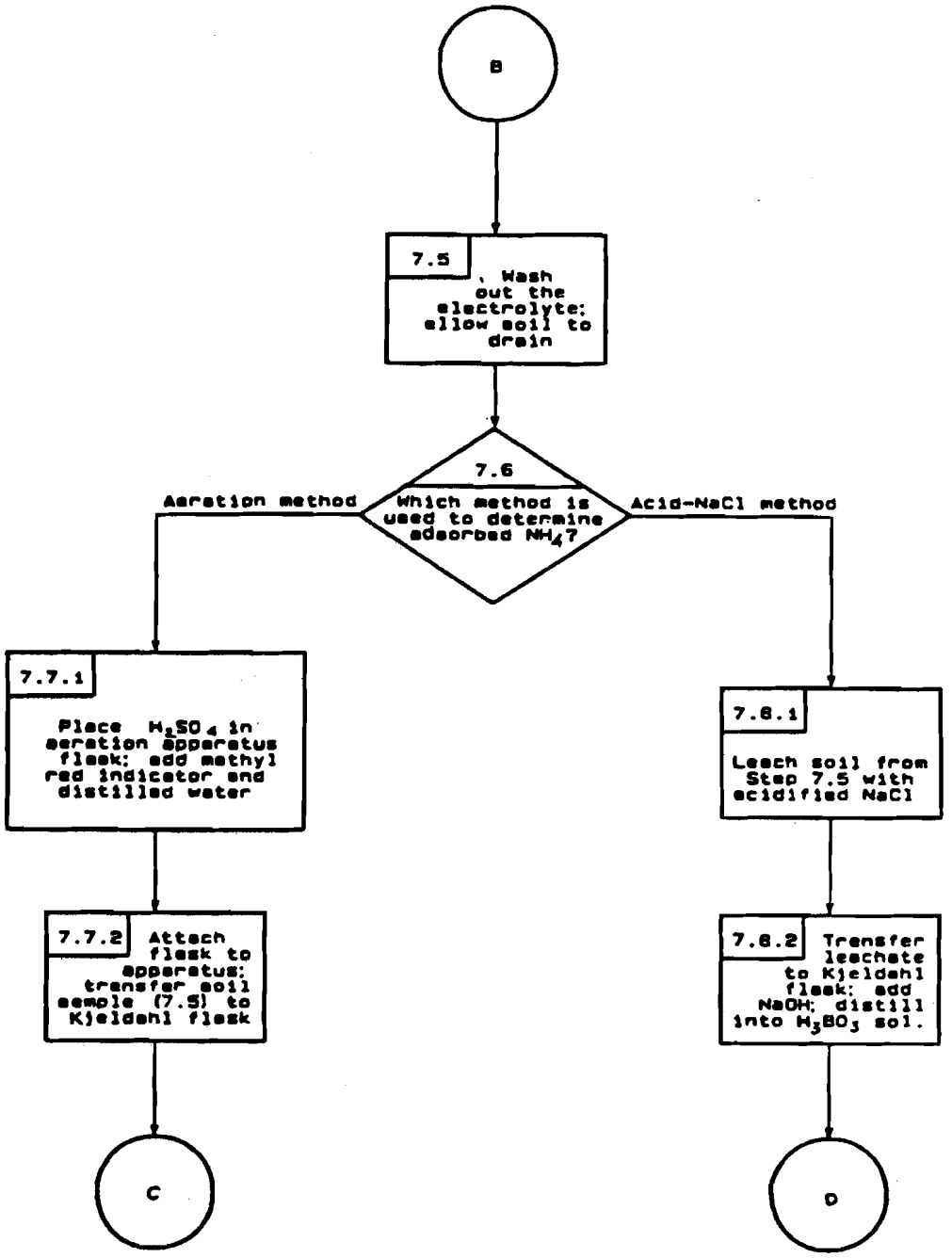
B
7.5
Wash out the electrolyte; allow soil to drain
7.6
Which method is used to determine adsorbed NH_4?
Aeration method
Acid-NaCl method
7.7.1
Place H_2SO_4 in aeration apparatus flask; add methyl red indicator and distilled water
7.7.2
Attach flask to apparatus; transfer soil sample (7.5) to Kjeldahl flask
C
7.8.1
Leach soil from Step 7.5 with acidified NaCl
7.8.2
Transfer leachate to Kjeldahl flask; add NaOH; distill into H_3BO_3 sol.
D

CATION-EXCHANGE CAPACITY (AMMONIUM ACETATE)
(Continued)

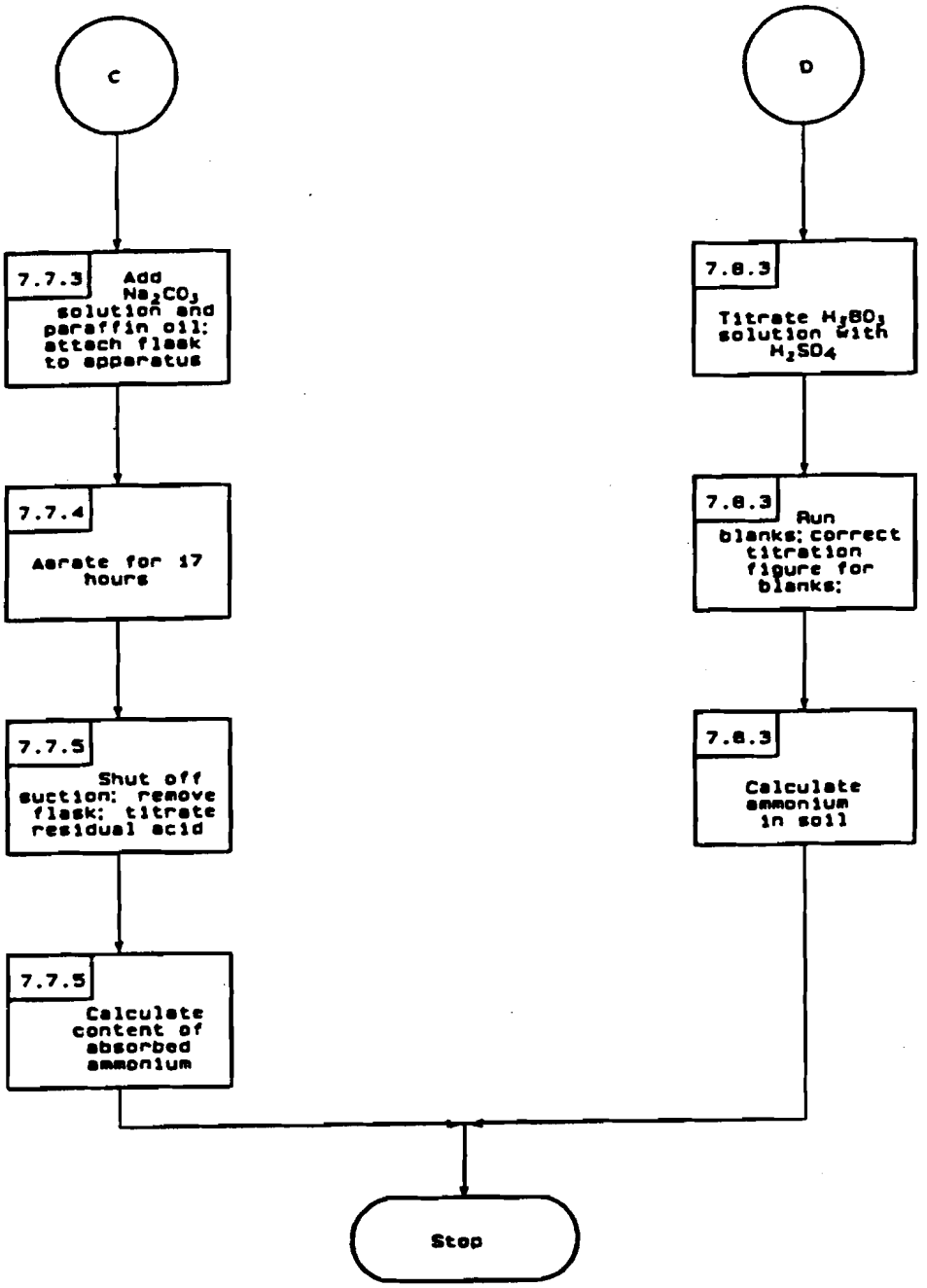

METHOD 9081

CATION-EXCHANGE CAPACITY OF SOILS (SODIUM ACETATE)

1.0 SCOPE AND APPLICATION

1.1 Method 9081 is applicable to most soils, including calcareous and noncalcareous soils. The method of cation-exchange capacity by summation (Chapman, 1965, p. 900; see Paragraph 10.1) should be employed for distinctly acid soils.

2.0 SUMMARY OF METHOD

2.1 The soil sample is mixed with an excess of sodium acetate solution, resulting in an exchange of the added sodium cations for the matrix cations. Subsequently, the sample is washed with isopropyl alcohol. An ammonium acetate solution is then added, which replaces the adsorbed sodium with ammonium. The concentration of displaced sodium is then determined by atomic absorption, emission spectroscopy, or an equivalent means.

3.0 INTERFERENCES

3.1 Interferences can occur during analysis of the extract for sodium content. Thoroughly investigate the chosen analytical method for potential interferences.

4.0 APPARATUS AND MATERIALS

4.1 Centrifuge tube and stopper: 50-mL, round-bottom, narrow neck.

4.2 Mechanical shaker.

4.3 Volumetric flask: 100-mL.

5.0 REAGENTS

5.1 Sodium acetate (NaOAc), 1.0 N: Dissolve 136 g of $NaC_2H_2O_2 \cdot 3H_2O$ in water and dilute it to 1,000 mL. The pH of this solution should be 8.2. If needed, add a few drops of acetic acid or NaOH solution to bring the reaction of the solution to pH 8.2.

5.2 Ammonium acetate (NH_4OAc), 1 N: Dilute 114 mL of glacial acetic acid (99.5%) with water to a volume of approximately 1 liter. Then add 138 mL of concentrated ammonium hydroxide (NH_4OH) and add water to obtain a volume of about 1,980 mL. Check the pH of the resulting solution, add more NH_4OH, as needed, to obtain a pH of 7, and dilute the solution to a volume of 2 liters with water.

5.3 Isopropyl alcohol: 99%.

6.0 SAMPLE COLLECTION, PRESERVATION, AND HANDLING

6.1 All samples must be collected using a sampling plan that addresses the considerations discussed in Chapter Nine of this manual.

7.0 PROCEDURE

7.1 Weigh 4 g of medium- or fine-textured soil or 6 g of coarse-textured soil and transfer the sample to a 50-mL, round-bottom, narrow-neck centrifuge tube. (A fine soil has >50% of the particles <0.074 mm, medium soil has >50% >0.425 mm, while a coarse soil has more than 50% of its particles >2 mm.

7.2 Add 33 mL of 1.0 N NaOAc solution, stopper the tube, shake it in a mechanical shaker for 5 min, and centrifuge it until the supernatant liquid is clear.

7.3 Decant the liquid, and repeat Paragraph 7.2 three more times.

7.4 Add 33 mL of 99% isopropyl alcohol, stopper the tube, shake it in a mechanical shaker for 5 min, and centrifuge it until the supernatant liquid is clear.

7.5 Repeat the procedure described in Paragraph 7.4 two more times.

7.6 Add 33 mL of NH_4OAc solution, stopper the tube, shake it in a mechanical shaker for 5 min, and centrifuge it until the supernatant liquid is clear. Decant the washing into a 100-mL volumetric flask.

7.7 Repeat the procedure described in Paragraph 7.6 two more times.

7.8 Dilute the combined washing to the 100-mL mark with ammonium acetate solution and determine the sodium concentration by atomic absorption, emission spectroscopy, or an equivalent method.

8.0 QUALITY CONTROL

8.1 All quality control data should be maintained and available for easy reference or inspection.

8.2 Employ a minimum of one blank per sample batch to determine if contamination or any memory effects are occurring.

8.3 Materials of known cation-exchange capacity must be routinely analyzed.

9.0 METHOD PERFORMANCE

9.1 No data provided.

10.0 REFERENCES

10.1 This method is based on Chapman, H.D., "Cation-exchange Capacity," pp. 891-900, in C.A. Black (ed.), Method of Soil Analysis, Part 2: Chemical and Microbiological Properties, Am. Soc. Agron., Madison, Wisconsin (1965).

METHOD 9081

CATION-EXCHANGE CAPACITY OF SOILS (SODIUM ACETATE)

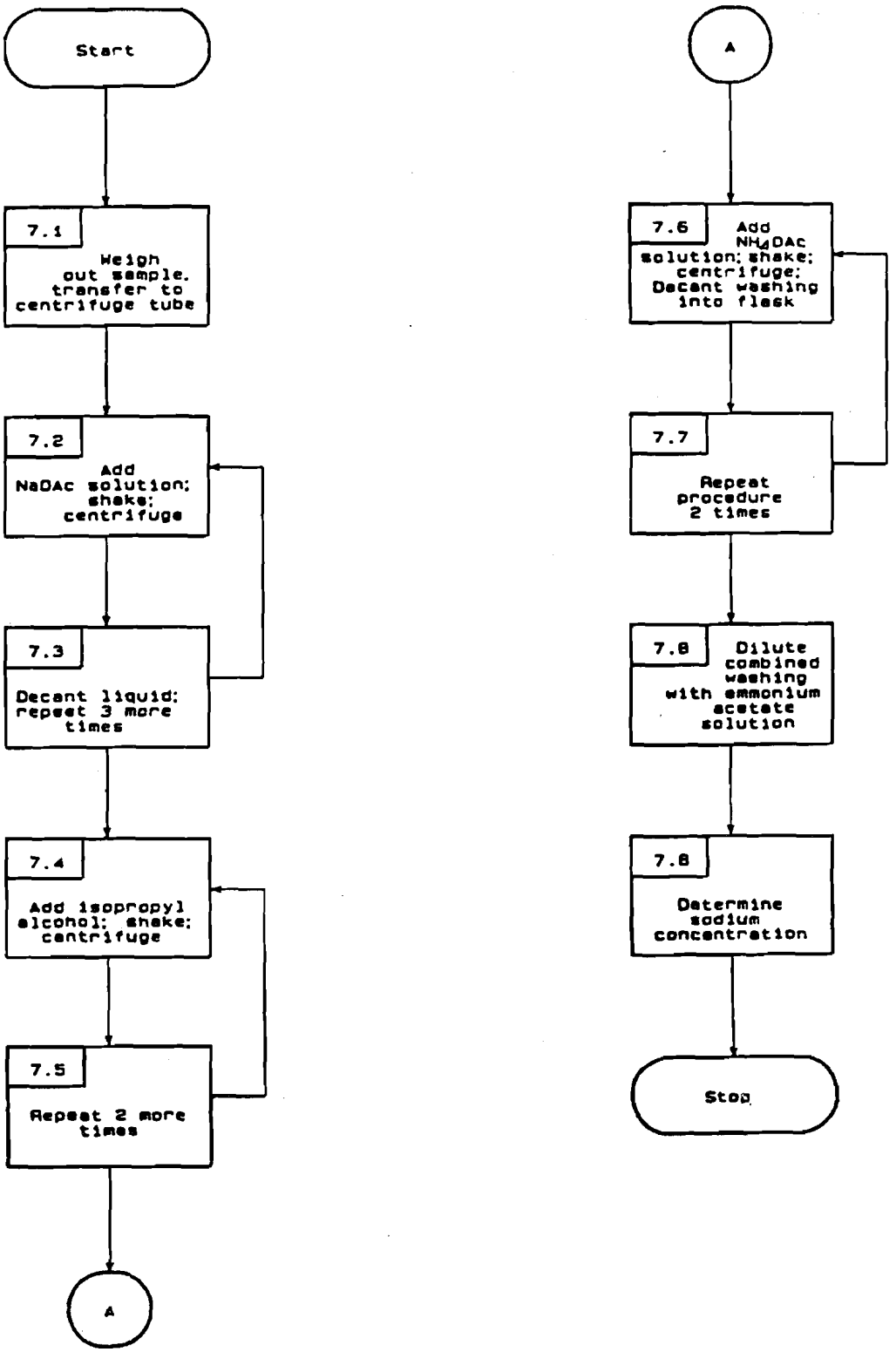

Revision 0
Date September 1986

METHOD 9090A

COMPATIBILITY TEST FOR WASTES AND MEMBRANE LINERS

1.0 SCOPE AND APPLICATION

1.1 Method 9090 is intended for use in determining the effects of chemicals in a surface impoundment, waste pile, or landfill on the physical properties of flexible membrane liner (FML) materials intended to contain them. Data from these tests will assist in deciding whether a given liner material is acceptable for the intended application.

2.0 SUMMARY OF METHOD

2.1 In order to estimate waste/liner compatibility, the liner material is immersed in the chemical environment for minimum periods of 120 days at room temperature (23 ± 2°C) and at 50 ± 2°C. In cases where the FML will be used in a chemical environment at elevated temperatures, the immersion testing shall be run at the elevated temperatures if they are expected to be higher than 50°C. Whenever possible, the use of longer exposure times is recommended. Comparison of measurements of the membrane's physical properties, taken periodically before and after contact with the waste fluid, is used to estimate the compatibility of the liner with the waste over time.

3.0 INTERFERENCES (Not Applicable)

4.0 APPARATUS AND MATERIALS

NOTE: In general, the following definitions will be used in this method:

1. Sample - a representative piece of the liner material proposed for use that is of sufficient size to allow for the removal of all necessary specimens.

2. Specimen - a piece of material, cut from a sample, appropriately shaped and prepared so that it is ready to use for a test.

4.1 Exposure tank - Of a size sufficient to contain the samples, with provisions for supporting the samples so that they do not touch the bottom or sides of the tank or each other, and for stirring the liquid in the tank. The tank should be compatible with the waste fluid and impermeable to any of the constituents they are intended to contain. The tank shall be equipped with a means for maintaining the solution at room temperature (23 ± 2°C) and 50 ± 2°C and for preventing evaporation of the solution (e.g., use a cover equipped with a reflux condenser, or seal the tank with a Teflon gasket and use an airtight cover). Both sides of the liner material shall be exposed to the chemical environment. The pressure inside the tank must be the same as that outside the tank. If the liner has a side that (1) is not exposed to the waste in actual use and (2) is not designed to withstand exposure to the chemical environment, then such a liner may be treated with only the barrier surface exposed.

4.2 Stress-strain machine suitable for measuring elongation, tensile strength, tear resistance, puncture resistance, modulus of elasticity, and ply adhesion.

4.3 Jig for testing puncture resistance for use with FTMS 101C, Method 2065.

4.4 Liner sample labels and holders made of materials known to be resistant to the specific wastes.

4.5 Oven at 105 ± 2°C.

4.6 Dial micrometer.

4.7 Analytical balance.

4.8 Apparatus for determining extractable content of liner materials.

NOTE: A minimum quantity of representative waste fluid necessary to conduct this test has not been specified in this method because the amount will vary depending upon the waste composition and the type of liner material. For example, certain organic waste constituents, if present in the representative waste fluid, can be absorbed by the liner material, thereby changing the concentration of the chemicals in the waste. This change in waste composition may require the waste fluid to be replaced at least monthly in order to maintain representative conditions in the waste fluid. The amount of waste fluid necessary to maintain representative waste conditions will depend on factors such as the volume of constituents absorbed by the specific liner material and the concentration of the chemical constituents in the waste.

5.0 REAGENTS (Not Applicable)

6.0 SAMPLE COLLECTION, PRESERVATION, AND HANDLING

6.1 For information on what constitutes a representative sample of the waste fluid, refer to the following guidance document:

Permit Applicants' Guidance Manual for Hazardous Waste Land Treatment, Storage, and Disposal Facilities; Final Draft; Chap. 5, pp. 15-17; Chap. 6, pp. 18-21; and Chap. 8, pp. 13-16, May 1984.

7.0 PROCEDURE

7.1 Obtain a representative sample of the waste fluid. If a waste sample is received in more than one container, blend thoroughly. Note any signs of stratification. If stratification exists, liner samples must be placed in each of the phases. In cases where the waste fluid is expected to stratify and the phases cannot be separated, the number of immersed samples per exposure period can be increased (e.g., if the waste fluid has two phases, then 2 samples per exposure period are needed) so that test samples exposed at each level of the waste can be tested. If the waste to be contained in the land disposal unit is in solid form, generate a synthetic leachate (see Step 7.9.1).

7.2 Perform the following tests on unexposed samples of the polymeric membrane liner material at 23 ± 2°C (see Steps 7.9.2 and 7.9.3 below for additional tests suggested for specific circumstances). Tests for tear resistance and tensile properties are to be performed according to the protocols referenced in Table 1. See Figure 1 for cutting patterns for nonreinforced liners, Figure 2 for cutting patterns for reinforced liners, and Figure 3 for cutting patterns for semicrystalline liners. (Table 2, at the end of this method, gives characteristics of various polymeric liner materials.)

1. Tear resistance, machine and transverse directions, three specimens each direction for nonreinforced liner materials only. See Table 1 for appropriate test method, the recommended test speed, and the values to be reported.

2. Puncture resistance, two specimens, FTMS 101C, Method 2065. See Figure 1, 2, or 3, as applicable, for sample cutting patterns.

3. Tensile properties, machine and transverse directions, three tensile specimens in each direction. See Table 1 for appropriate test method, the recommended test speed, and the values to be reported. See Figure 4 for tensile dumbbell cutting pattern dimensions for nonreinforced liner samples.

4. Hardness, three specimens, Duro A (Duro D if Duro A reading is greater than 80), ASTM D2240. The hardness specimen thickness for Duro A is 1/4 in., and for Duro D it is 1/8 in. The specimen dimensions are 1 in. by 1 in.

5. Elongation at break. This test is to be performed only on membrane materials that do not have a fabric or other nonelastomeric support as part of the liner.

6. Modulus of elasticity, machine and transverse directions, two specimens each direction for semicrystalline liner materials only, ASTM D882 modified Method A (see Table 1).

7. Volatiles content, SW 870, Appendix III-D.

8. Extractables content, SW 870, Appendix III-E.

9. Specific gravity, three specimens, ASTM D792 Method A.

10. Ply adhesion, machine and transverse directions, two specimens each direction for fabric reinforced liner materials only, ASTM D413 Machine Method, Type A -- 180 degree peel.

11. Hydrostatic resistance test, ASTM D751 Method A, Procedure 1.

7.3 For each test condition, cut five pieces of the lining material of a size to fit the sample holder, or at least 8 in. by 10 in. The fifth sample is an extra sample. Inspect all samples for flaws and discard unsatisfactory ones. Liner materials with fabric reinforcement require close inspection to ensure that threads of the samples are evenly spaced and straight at 90°. Samples containing a fiber scrim support may be flood-coated along the exposed

edges with a solution recommended by the liner manufacturer, or another procedure should be used to prevent the scrim from being directly exposed. The flood-coating solution will typically contain 5-15% solids dissolved in a solvent. The solids content can be the liner formula or the base polymer.

Measure the following:

1. Gauge thickness, in. -- average of the four corners.

2. Mass, lb. -- to one-hundredth of a lb.

3. Length, in. -- average of the lengths of the two sides plus the length measured through the liner center.

4. Width, in. -- average of the widths of the two ends plus the width measured through the liner center.

NOTE: Do not cut these liner samples into the test specimen shapes shown in Figure 1, 2, or 3 at this time. Test specimens will be cut as specified in Step 7.7, after exposure to the waste fluid.

7.4 Label the liner samples (e.g., notch or use metal staples to identify the sample) and hang in the waste fluid by a wire hanger or a weight. Different liner materials should be immersed in separate tanks to avoid exchange of plasticizers and soluble constituents when plasticized membranes are being tested. Expose the liner samples to the stirred waste fluid held at room temperature and at 50 ± 2°C.

7.5 At the end of 30, 60, 90, and 120 days of exposure, remove one liner sample from each test condition to determine the membrane's physical properties (see Steps 7.6 and 7.7). Allow the liner sample to cool in the waste fluid until the waste fluid has a stable room temperature. Wipe off as much waste as possible and rinse briefly with water. Place wet sample in a labeled polyethylene bag or aluminum foil to prevent the sample from drying out. The liner sample should be tested as soon as possible after removal from the waste fluid at room temperature, but in no case later than 24 hours after removal.

7.6 To test the immersed sample, wipe off any remaining waste and rinse with deionized water. Blot sample dry and measure the following as in Step 7.3:

1. Gauge thickness, in.

2. Mass, lb.

3. Length, in.

4. Width, in.

7.7 Perform the following tests on the exposed samples (see Steps 7.9.2 and 7.9.3 below for additional tests suggested for specific circumstances). Tests for tear resistance and tensile properties are to be performed according to the protocols referenced in Table 1. Die-cut test specimens following suggested cutting patterns. See Figure 1 for cutting patterns for nonreinforced

liners, Figure 2 for cutting patterns for reinforced liners, and Figure 3 for semicrystalline liners.

1. Tear resistance, machine and transverse directions, three specimens each direction for materials without fabric reinforcement. See Table 1 for appropriate test method, the recommended test specimen and speed of test, and the values to be reported.

2. Puncture resistance, two specimens, FTMS 101C, Method 2065. See Figure 1, 2, or 3, as applicable, for sample cutting patterns.

3. Tensile properties, machine and transverse directions, three specimens each direction. See Table 1 for appropriate test method, the recommended test specimen and speed of test, and the values to be reported. See Figure 4 for tensile dumbbell cutting pattern dimensions for nonreinforced liner samples.

4. Hardness, three specimens, Duro A (Duro D if Duro A reading is greater than 80), ASTM 2240. The hardness specimen thickness for Duro A is 1/4 in., and for Duro D is 1/8 in. The specimen dimensions are 1 in. by 1 in.

5. Elongation at break. This test is to be performed only on membrane materials that do not have a fabric or other nonelastomeric support as part of the liner.

6. Modulus of elasticity, machine and transverse directions, two specimens each direction for semicrystalline liner materials only, ASTM D882 modified Method A (see Table 1).

7. Volatiles content, SW 870, Appendix III-D.

8. Extractables content, SW 870, Appendix III-E.

9. Ply adhesion, machine and transverse directions, two specimens each direction for fabric reinforced liner materials only, ASTM D413 Machine Method, Type A -- 180 degree peel.

10. Hydrostatic resistance test, ASTM D751 Method A, Procedure 1.

7.8 Results and reporting

7.8.1 Plot the curve for each property over the time period 0 to 120 days and display the spread in data points.

7.8.2 Report all raw, tabulated, and plotted data. Recommended methods for collecting and presenting information are described in the documents listed under Step 6.1 and in related agency guidance manuals.

7.8.3 Summarize the raw test results as follows:

1. Percent change in thickness.

2. Percent change in mass.

3. Percent change in area (provide length and width dimensions).

4. Percent retention of physical properties.

5. Change, in points, of hardness reading.

6. The modulus of elasticity calculated in pounds-force per square inch.

7. Percent volatiles of unexposed and exposed liner material.

8. Percent extractables of unexposed and exposed liner material.

9. The adhesion value, determined in accordance with ASTM D413, Step 12.2.

10. The pressure and time elapsed at the first appearance of water through the flexible membrane liner for the hydrostatic resistance test.

7.9 The following additional procedures are suggested in specific situations:

7.9.1 For the generation of a synthetic leachate, the Agency suggests the use of the Toxicity Characteristic Leaching Procedure (TCLP) that was finalized in the Federal Register on June 29, 1990, Vol. 55, No. 126, p. 26986.

7.9.2 For semicrystalline membrane liners, the Agency suggests the determination of the potential for environmental stress cracking. The test that can be used to make this determination is either ASTM D1693 or the National Institute of Standards and Technology Constant Tensile Load. The evaluation of the results should be provided by an expert in this field.

7.9.3 For field seams, the Agency suggests the determination of seam strength in shear and peel modes. To determine seam strength in peel mode, the test ASTM D413 can be used. To determine seam strength in shear mode for nonreinforced FMLs, the test ASTM D3083 can be used, and for reinforced FMLs, the test ASTM D751, Grab Method, can be used at a speed of 12 in. per minute. The evaluation of the results should be provided by an expert in this field.

8.0 QUALITY CONTROL

8.1 Determine the mechanical properties of identical nonimmersed and immersed liner samples in accordance with the standard methods for the specific physical property test. Conduct mechanical property tests on nonimmersed and immersed liner samples prepared from the same sample or lot of material in the same manner and run under identical conditions. Test liner samples immediately after they are removed from the room temperature test solution.

9.0 METHOD PERFORMANCE

9.1 No data provided.

10.0 REFERENCES

1. None required.

Table 1. Physical testing of exposed membranes in liner-waste liquid compatibility test

Type of compound and construction	Crosslinked or vulcanized	Thermoplastic	Semicrystalline	Fabric-reinforced[a]
Tensile properties method	ASTM D412	ASTM D638	ASTM D638	ASTM D751, Method B
Type of specimen	Dumbbell[b]	Dumbbell[b]	Dumbbell[b]	1-in. wide strip and 2-in. jaw separation
Number of specimens	3 in each direction	3 in each direction	3 in each direction	3 in each direction
Speed of test	20 ipm	20 ipm	2 ipm	12 ipm
Values to be reported	Tensile strength, psi Elongation at break, % Tensile set after break, % Stress at 100 and 200% elongation, psi	Tensile strength, psi Elongation at break, % Tensile set after break, % Stress at 100 and 200% elongation, psi	Tensile strength at yield, psi Elongation at yield, % Tensile set at break, psi Elongation at break, psi Tensile set after break, % Stress at 100 and 200% elongation, psi	Tensile at fabric break, ppi Elongation at fabric break, % Tensile at ultimate break, ppi Elongation at ultimate break, ppi Tensile set after break, % Stress at 100 and 200% elongation, psi
Modulus of elasticity method	c	c	ASTM D882, Method A	c
Type of specimen	—	—	Strip: 0.5 in. wide and 6. in long at a 2 in. jaw separation	—
Number of specimens	—	—	2 in each direction	—
Speed of test	—	—	0.2 ipm	—
Values reported	—	—	Greatest slope of initial stress - strain curve, psi	—
Tear resistance method	ASTM D624	ASTM 1004	ASTM D1004	d
Type of specimen	Die C	e	e	—
Number of specimens	3 in each direction	3 in each direction	2 in each direction	—
Speed of test	20 ipm	20 ipm	2 ipm	—
Values reported	Stress, ppi	Stress, ppi	Maximum stress, ppi	—
Puncture resistance method	FTMS 101C, Method 2065	FTMS 101C, Method 2065	FTMS 101C, Method 2065	FTMS 101C, Method 2065
Type of specimen	2 in. square	2 in. square	2 in. square	2 in. square
Number of specimens	2	2	2	2
Speed of test	20 ipm	20 ipm	20 ipm	20 ipm
Values reported	Gage, mil Stress, lb Elongation, in.	Gage, mil Stress, lb Elongation, in.	Gage, mil Stress, lb Elongation, in.	Gage, mil Stress, lb Elongation, in.

[a]Can be thermoplastic, crosslinked, or vulcanized membrane.
[b]See Figure 4.
[c]Not performed on this material.
[d]No tear resistance test is recommended for fabric-reinforced sheetings in the immersion study.
[e]Same as ASTM D624, Die C.

TABLE 2.
POLYMERS USED IN FLEXIBLE MEMBRANE LINERS

Thermoplastic Materials (TP)

CPE (Chlorinated polyethylene)[a]

A family of polymers produced by a chemical reaction of chlorine on polyethylene. The resulting thermoplastic elastomers contain 25 to 45% chlorine by weight and 0 to 25% crystallinity.

CSPE (Chlorosulfonated polyethylene)[a]

A family of polymers that are produced by the reaction of polyethylene with chlorine and sulfur dioxide, usually containing 25 to 43% chlorine and 1.0 to 1.4% sulfur. Chlorosulfonated polyethylene is also known as hypalon.

EIA (Ethylene interpolymer alloy)[a]

A blend of EVA and polyvinyl chloride resulting in a thermoplastic elastomer.

PVC (Polyvinyl chloride)[a]

A synthetic thermoplastic polymer made by polymerizing vinyl chloride monomer or vinyl chloride/vinyl acetate monomers. Normally rigid and containing 50% of plasticizers.

PVC-CPE (Polyvinyl chloride - chlorinated polyethylene alloy)[a]

A blend of polyvinyl chloride and chlorinated polyethylene.

TN-PVC (Thermoplastic nitrile-polyvinyl chloride)[a]

An alloy of thermoplastic unvulcanized nitrile rubber and polyvinyl chloride.

Vulcanized Materials (XL)

Butyl rubber[a]

A synthetic rubber based on isobutylene and a small amount of isoprene to provide sites for vulcanization.

---

aAlso supplied reinforced with fabric.

TABLE 2. (Continued)

EPDM (Ethylene propylene diene monomer)[a,b]

A synthetic elastomer based on ethylene, propylene, and a small amount of nonconjugated diene to provide sites for vulcanization.

CM (Cross-linked chlorinated polyethylene)

No definition available by EPA.

CO, ECO (Epichlorohydrin polymers)[a]

Synthetic rubber, including two epichlorohydrin-based elastomers that are saturated, high-molecular-weight aliphatic polyethers with chloromethyl side chains. The two types include homopolymer (CO) and a copolymer of epichlorohydrin and ethylene oxide (ECO).

CR (Polychloroprene)[a]

Generic name for a synthetic rubber based primarily on chlorobutadiene. Polychloroprene is also known as neoprene.

Semicrystalline Materials (CX)

HDPE - (High-density polyethylene)

A polymer prepared by the low-pressure polymerization of ethylene as the principal monomer.

HDPE - A (High-density polyethylene/rubber alloy)

A blend of high-density polyethylene and rubber.

LLDPE (Liner low-density polyethylene)

A low-density polyethylene produced by the copolymerization of ethylene with various alpha olefins in the presence of suitable catalysts.

PEL (Polyester elastomer)

A segmented thermoplastic copolyester elastomer containing recurring long-chain ester units derived from dicarboxylic acids and long-chain glycols and short-chain ester units derived from dicarboxylic acids and low-molecular-weight diols.

---

[a]Also supplied reinforced with fabric.
[b]Also supplied as a thermoplastic.

TABLE 2. (Continued)

olyethylene ethylene/propylene alloy)

A blend of polyethylene and ethylene and propylene polymer resulting in a thermoplastic elastomer.

T-EPDM (Thermoplastic EPDM)

An ethylene-propylene diene monomer blend resulting in a thermoplastic elastomer.

FIGURE 1. SUGGESTED PATTERN FOR CUTTING TEST SPECIMENS FROM NONREINFORCED CROSSLINKED OR THERMOPLASTIC IMMERSED LINER SAMPLES.

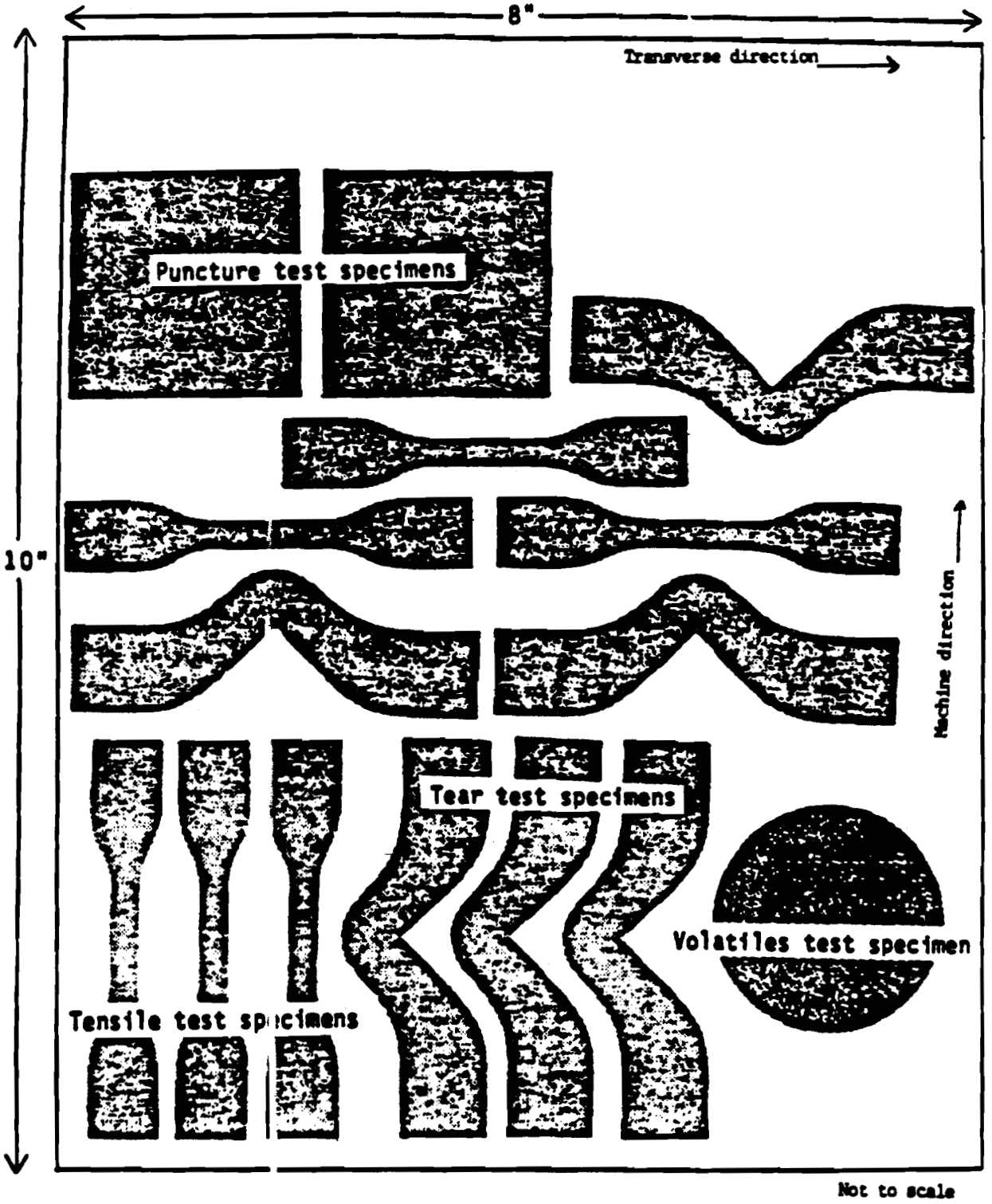

FIGURE 2. SUGGESTED PATTERN FOR CUTTING TEST SPECIMENS FROM FABRIC REINFORCED IMMERSED LINER SAMPLES.

NOTE: TO AVOID EDGE EFFECTS, CUT SPECIMENS 1/8 - 1/4 INCH IN FROM EDGE OF IMMERSED SAMPLE.

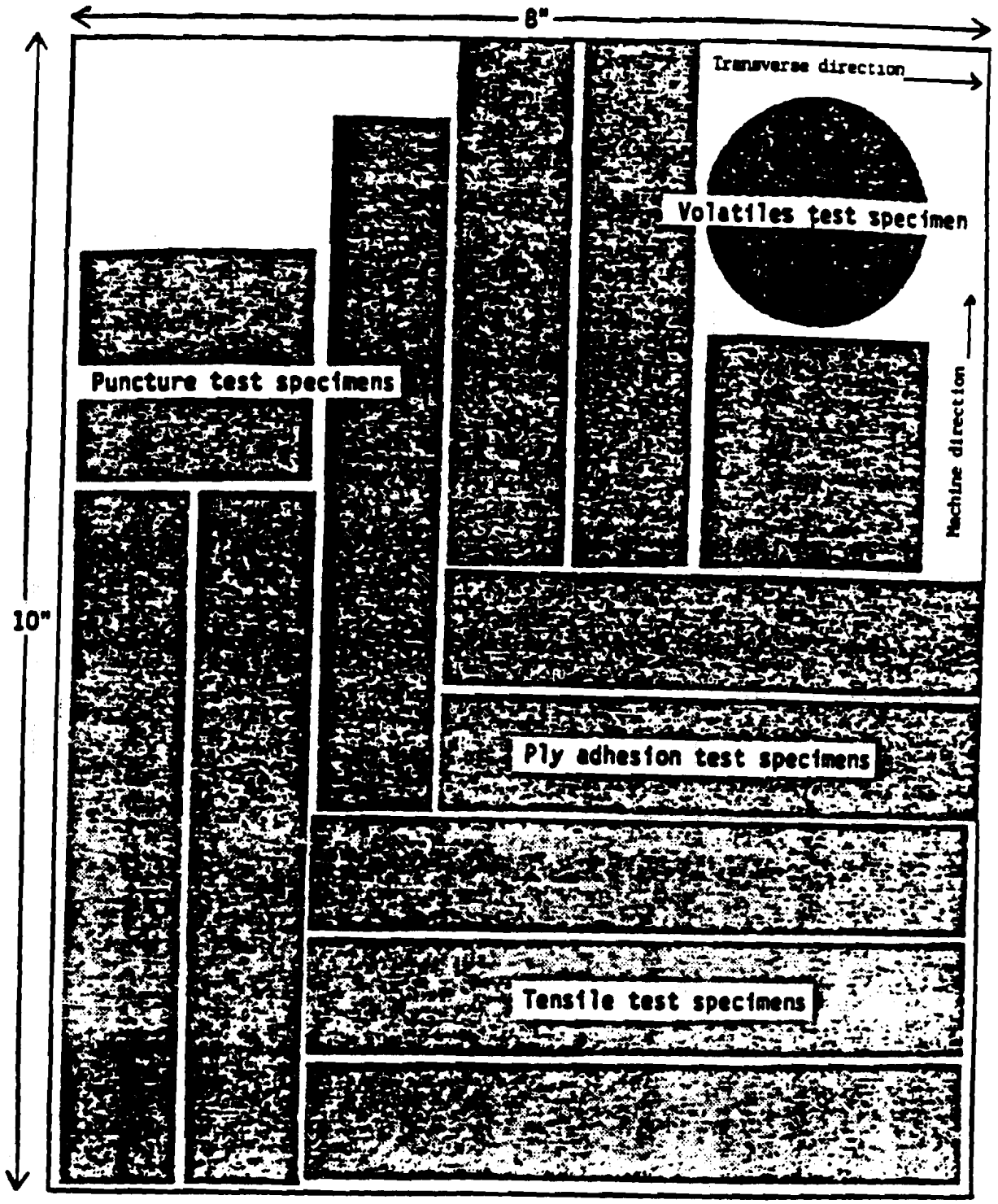

Not to scale

FIGURE 3. SUGGESTED PATTERN FOR CUTTING TEST SPECIMENS FROM SEMICRYSTALLINE IMMERSED LINER SAMPLES.

NOTE: TO AVOID EDGE EFFECTS, CUT SPECIMENS 1/8 TO 1/4 INCH IN FROM EDGE OF IMMERSED SAMPLE.

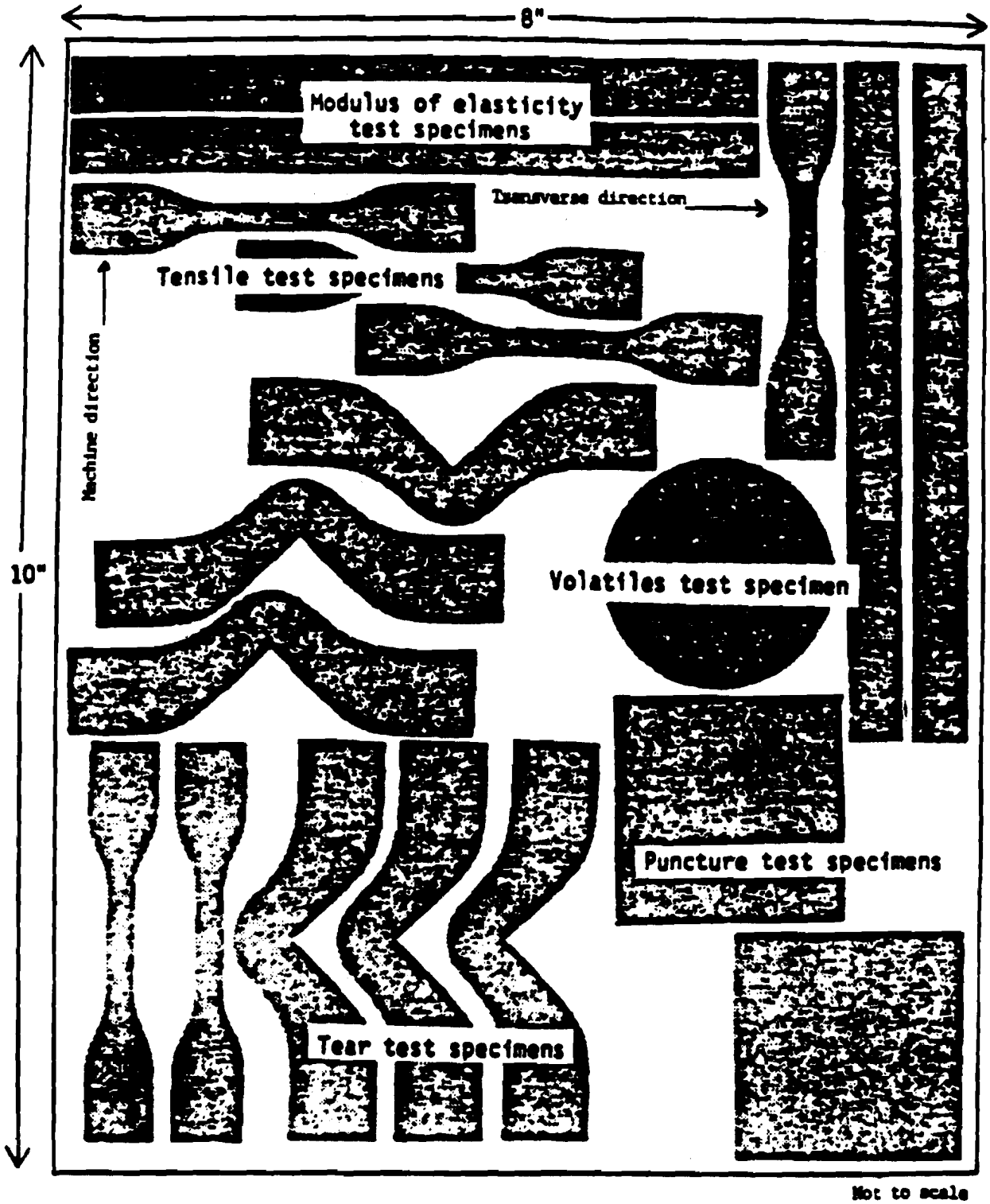

FIGURE 4. DIE FOR TENSILE DUMBBELL (NONREINFORCED LINERS) HAVING THE FOLLOWING DIMENSIONS:

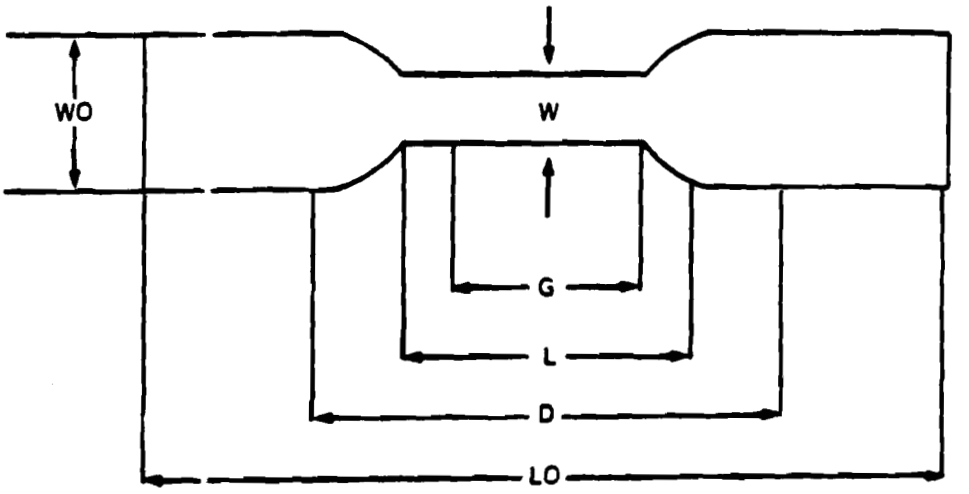

W	- Width of narrow section	0.25 inches
L	- Length of narrow section	1.25 inches
WO	- Width overall	0.625 inches
LO	- Length overall	3.50 inches
G	- Gage length	1.00 inches
D	- Distance between gaps	2.00 inches

METHOD 9090A
COMPATIBILITY TEST FOR WASTES AND MEMBRANE LINERS

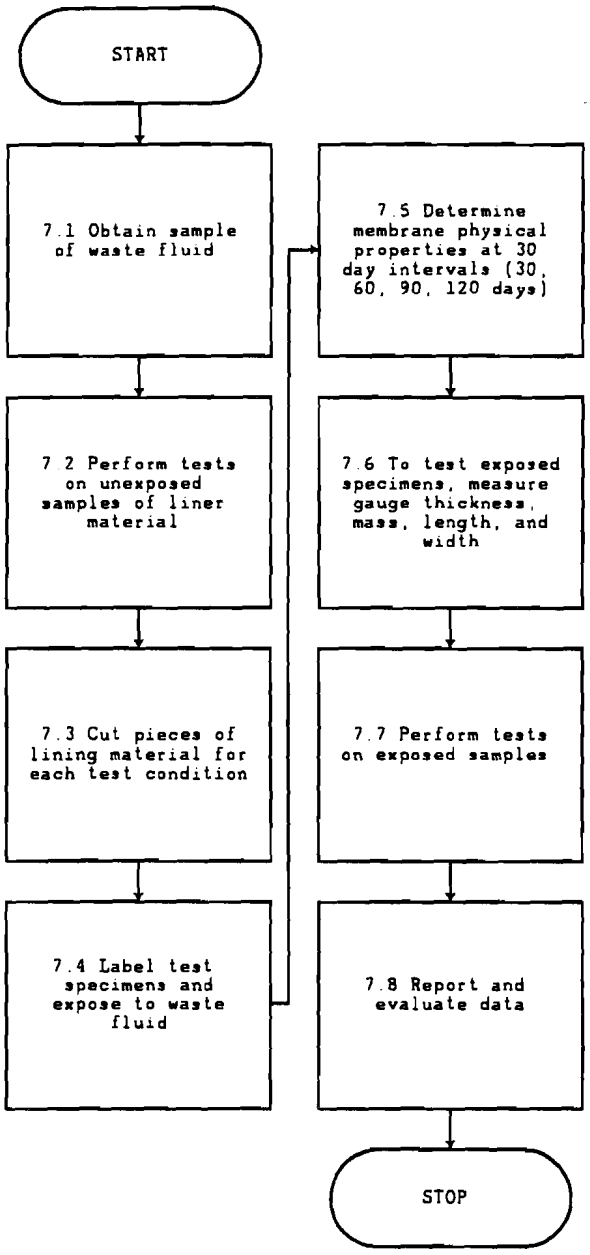

METHOD 9095

PAINT FILTER LIQUIDS TEST

1.0 SCOPE AND APPLICATION

1.1 This method is used to determine the presence of free liquids in a representative sample of waste.

1.2 The method is used to determine compliance with 40 CFR 264.314 and 265.314.

2.0 SUMMARY OF METHOD

2.1 A predetermined amount of material is placed in a paint filter. If any portion of the material passes through and drops from the filter within the 5-min test period, the material is deemed to contain free liquids.

3.0 INTERFERENCES

3.1 Filter media were observed to separate from the filter cone on exposure to alkaline materials. This development causes no problem if the sample is not disturbed.

4.0 APPARATUS AND MATERIALS

4.1 Conical paint filter: Mesh number 60 (fine meshed size). Available at local paint stores such as Sherwin-Williams and Glidden for an approximate cost of $0.07 each.

4.2 Glass funnel: If the paint filter, with the waste, cannot sustain its weight on the ring stand, then a fluted glass funnel or glass funnel with a mouth large enough to allow at least 1 in. of the filter mesh to protrude should be used to support the filter. The funnel is to be fluted or have a large open mouth in order to support the paint filter yet not interfere with the movement, to the graduated cylinder, of the liquid that passes through the filter mesh.

4.3 Ring stand and ring, or tripod.

4.4 Graduated cylinder or beaker: 100-mL.

5.0 REAGENTS

5.1 None.

6.0 SAMPLE COLLECTION, PRESERVATION, AND HANDLING

6.1 All samples must be collected according to the directions in Chapter Nine of this manual.

6.2 A 100-mL or 100-g representative sample is required for the test. If it is not possible to obtain a sample of 100 mL or 100 g that is sufficiently representative of the waste, the analyst may use larger size samples in multiples of 100 mL or 100 g, i.e., 200, 300, 400 mL or g. However, when larger samples are used, analysts shall divide the sample into 100-mL or 100-g portions and test each portion separately. If any portion contains free liquids, the entire sample is considered to have free liquids.

7.0 PROCEDURE

7.1 Assemble test apparatus as shown in Figure 1.

7.2 Place sample in the filter. A funnel may be used to provide support for the paint filter.

7.3 Allow sample to drain for 5 min into the graduated cylinder.

7.4 If any portion of the test material collects in the graduated cylinder in the 5-min period, then the material is deemed to contain free liquids for purposes of 40 CFR 264.314 and 265.314.

8.0 QUALITY CONTROL

8.1 Duplicate samples should be analyzed on a routine basis.

9.0 METHOD PERFORMANCE

9.1 No data provided.

10.0 REFERENCES

10.1 None required.

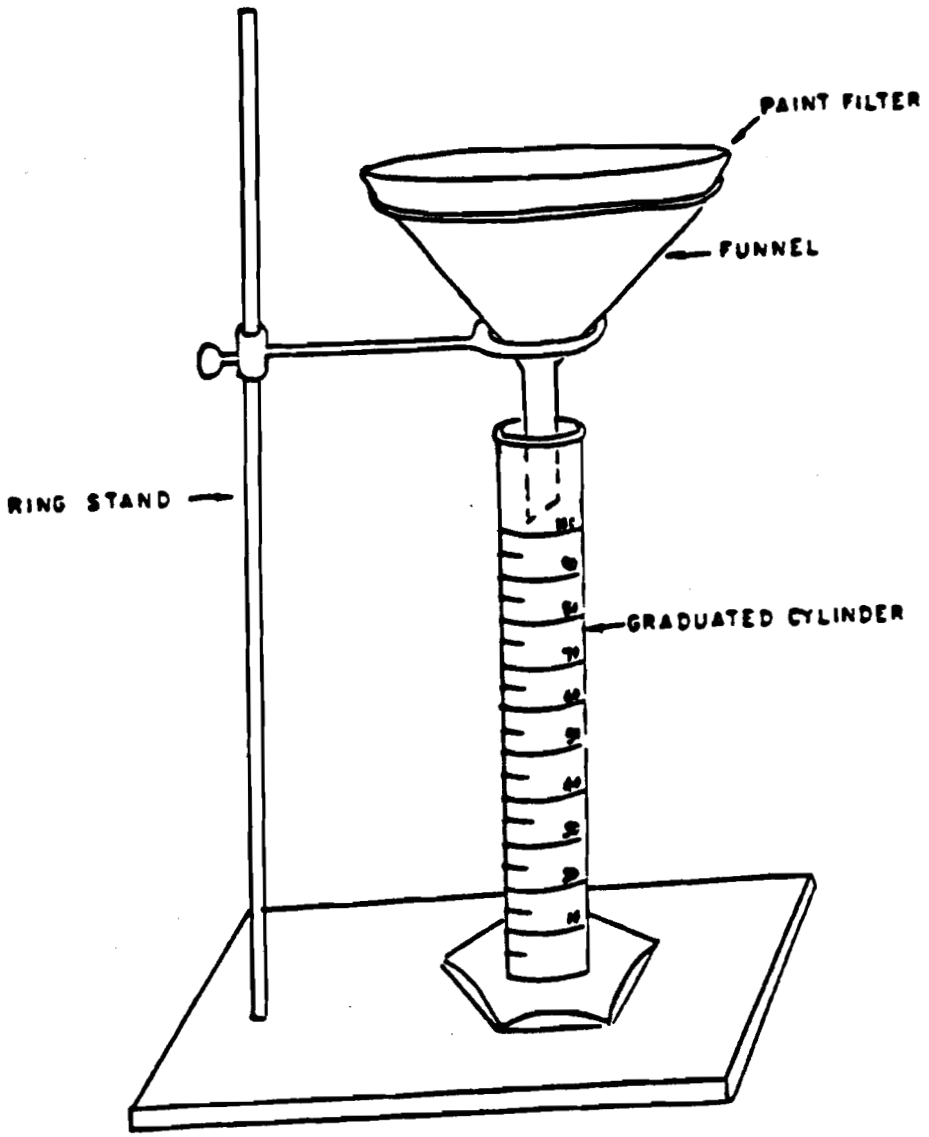

Figure 1. Paint filter test apparatus.

METHOD 9095

PAINT FILTER LIQUIDS TEST

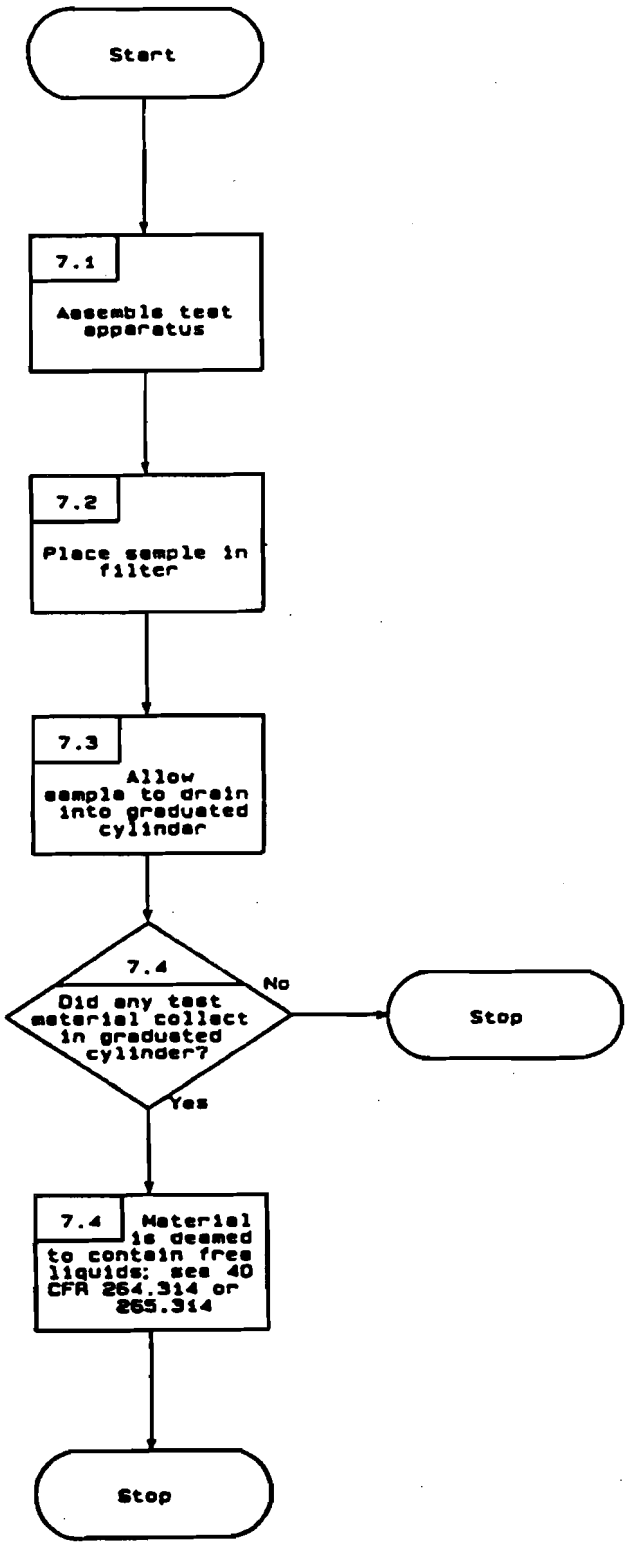

Revision 0
Date September 1986

METHOD 9096

LIQUID RELEASE TEST (LRT) PROCEDURE

1.0 SCOPE AND APPLICATION

1.1 The Liquid Release Test (LRT) is a laboratory test designed to determine whether or not liquids will be released from sorbents when they are subjected to overburden pressures in a landfill.

1.2 Any liquid-loaded sorbent that fails the EPA Paint Filter Free Liquids Test (PFT) (SW-846 Method 9095), may be assumed to release liquids in this test. Analysts should ensure that the material in question will pass the PFT before performing the LRT.

2.0 SUMMARY OF METHOD

2.1 A representative sample of the liquid-loaded sorbent, standing 10 cm high in the device, is placed between twin stainless steel screens and two stainless-steel grids, in a device capable of simulating landfill overburden pressures. An absorptive filter paper is placed on the side of each stainless-steel grid opposite the sample (i.e., the stainless-steel screen separates the sample and the filter paper, while the stainless-steel grid provides a small air gap to prevent wicking of liquid from the sample onto the filter paper). A compressive force of 50 psi is applied to the top of the sample. Release of liquid is indicated when a visible wet spot is observed on either filter paper.

3.0 INTERFERENCES

3.1 When testing sorbents are loaded with volatile liquids (e.g., solvents), any released liquid migrating to the filter paper may rapidly evaporate. For this reason, filter papers should be examined immediately after the test has been conducted.

3.2 It is necessary to thoroughly clean and dry the stainless-steel screens prior to testing to prevent false positive or false negative results. Material caught in screen holes may impede liquid transmission through the screen causing false negative results. A stiff bristled brush, like those used to clean testing sieves, may be used to dislodge material from holes in the screens. The screens should be ultrasonically cleaned with a laboratory detergent, rinsed with deionized water, rinsed with acetone, and thoroughly dried.

When sorbents containing oily substances are tested, it may be necessary to use solvents (e.g., methanol or methylene chloride) to remove any oily residue from the screens and from the sample holder surfaces.

3.3 When placing the 76 mm screen on top of the loaded sample it is important to ensure that no sorbent is present on top of the screen to contact the filter paper and cause false positive results. In addition, some sorbent residue may adhere to container sidewalls and contact the filter as the sample

compresses under load, causing wet spots on the edges of the filter. This type of false positive may be avoided by carefully centering the 76 mm filter paper in the device prior to initiating the test.

3.4 Visual examination of the sample may indicate that a release is certain (e.g., free standing liquid or a sample that flows like a liquid), raising concern over unnecessary clean-up of the LRT device. An optional 5 minute Pre-Test, described in Appendix A of this procedure, may be used to determine whether or not an LRT must be performed.

4.0 APPARATUS AND MATERIALS

4.1 LRT Device (LRTD): A device capable of applying 50 psi of pressure continuously to the top of a confined, cylindrical sample (see Figure 1). The pressure is applied by a piston on the top of the sample. All device components contacting the sample (i.e., sample-holder, screens, and piston) should be resistant to attack by substances being tested. The LRTD consists of two basic components, described below.

4.1.1 Sample holder: A rigid-wall cylinder, with a bottom plate, capable of holding a 10 cm high by 76 mm diameter sample.

4.1.2 Pressure Application Device: In the LRTD (Figure 1), pressure is applied to the sample by a pressure rod pushing against a piston that lies directly over the sample. The rod may be pushed against the piston at a set pressure using pneumatic, mechanical, or hydraulic pressure. Pneumatic pressure application devices should be equipped with a pressure gauge accurate to within $\pm$ 1 psi, to indicate when the desired pressure has been attained and whether or not it is adequately maintained during the test. Other types of pressure application devices (e.g., mechanical or hydraulic) may be used if they can apply the specified pressure continuously over the ten minute testing time. The pressure application device must be calibrated by the manufacturer, using a load cell or similar device placed under the piston, to ensure that 50 $\pm$ 1 psi is applied to the top of the sample. The pressure application device should be sufficiently rugged to deliver consistent pressure to the sample with repeated use.

4.2 Stainless-Steel Screens: To separate the sample from the filter, thereby preventing false positive results from particles falling on the filter paper. The screens are made of stainless steel and have hole diameters of 0.012 inches with 2025 holes per square inch. Two diameters of screens are used: a larger (90 mm) screen beneath the sample and a smaller (76 mm) screen that is placed on top of the sample in the sample-holding cylinder.

4.3 Stainless-Steel Grids: To provide an air gap between the stainless-steel screen and filter paper, preventing false positive results from capillary action. The grids are made of 1/32" diameter, woven, stainless steel wire cut to two diameters, 90 mm and 76 mm.

4.4 Filter Papers: To detect released liquid. Two sizes, one 90 mm and one 76 mm, are placed on the side of the screen opposite the sample. The 76 mm diameter filter paper has the outer 6 mm cut away except 3 conical points used for centering the paper (see Figure 2). Blue, seed-germination filter paper manufactured by Schleicher and Schuell (Catalog Number 33900) is suitable. Other colored, absorptive papers may be used as long as they provide sufficient wet/dry contrast for the operator to clearly see a wet spot.

4.5 Spatula: To assist in loading and removing the sample.

4.6 Rubber or wooden mallet: To tap the sides of the device to settle and level the sample.

5.0 REAGENTS

5.1 Reagent grade chemicals shall be used in all tests. Unless otherwise indicated, it is intended that all reagents shall conform to the specifications of the Committee on Analytical Reagents of the American Chemical Society, where such specifications are available. Other grades may be used, provided it is first ascertained that the reagent is of sufficiently high purity to permit its use without lessening the accuracy of the determination.

5.2 Reagent water. All references to water in this method refer to reagent water, as defined in Chapter One.

5.3 Acetone.

6.0 SAMPLE COLLECTION, PRESERVATION AND HANDLING

6.1 All samples should be collected using a sampling plan that addresses the considerations discussed in "Test Methods for Evaluating Solid Wastes (SW-846)." The sampling plan should be designed to detect and sample any pockets of liquids that may be present in a container (i.e., in the bottom or top of the container).

6.2 Preservatives should not be added to samples.

6.3 Samples should be tested as soon as possible after collection, but in no case after more than three days after collection. If samples must be stored, they can be stored in sealed containers and maintained under dark, cool conditions (temperature ranging between 35° and 72° F). Samples should not be frozen.

7.0 PROCEDURE

The procedure below was developed for the original LRTD, manufactured by Associated Design and Manufacturing Company (ADM). Procedures for other LRTDs, along with evidence for equivalency to the ADM device, should be supplied by the manufacturer.

7.1 Disassemble the LRTD and make sure that all parts are clean and dry.

7.2 Invert the sample-holding cylinder and place the large stainless-steel screen, the large stainless-steel grid, then a 90 mm filter paper on the cylinder base (bottom-plate side).

7.3 Secure the bottom plate (plate with a hole in the center and four holes located on the outer circumference) to the flange on the bottom of the sample-holding cylinder using four knob screws.

7.4 Turn the sample holder assembly to the right-side-up position (bottom-plate-side down). Fill the sample holder with a representative sample until the sample height measures 10 cm (up to the etched line in the cylinder).

7.5 Tap the sides of the sample holder with a rubber or wooden mallet to remove air pockets and to settle and level the sample.

7.6 Repeat filling, and tapping until a sample height of 10 cm is maintained after tapping.

7.7 Smooth the top of the sample with a spatula to create a horizontal surface.

7.8 Place the small stainless-steel screen, then the small stainless-steel grid on top of the sample.

> NOTE: Prior to placing the stainless-steel grid on top of the screen, make sure that no sorbent material is on the grid side of the stainless-steel screen.

7.9 Place the 76 mm filter paper on top of the small stainless-steel grid, making sure the filter paper is centered in the device.

7.10 Using the piston handle (screwed into the top of the piston) lower the piston into the sample holder until it sits on top of the filter paper. Unscrew and remove the handle.

7.11 Place the loaded sample holder into position on the baseplate and lock into place with two toggle clamps.

7.12 Place the pressure application device on top of the sample-holder. Rotate the device to lock it into place and insert the safety key.

7.13 Connect air lines.

7.14 Initiate rod movement and pressure application by pulling the air-valve lever toward the operator and note time on data sheet. The pressure gauge at the top of the pressure application device should read as specified in the factory calibration record for the particular device. If not, adjust regulator to attain the specified pressure.

NOTE: After pressure application, the air lines can be disconnected, the toggle clamps can be released, and the LRTD can be set aside for 10 minutes while other LRTDs are pressurized. LRTD pressures should be checked every 3 minutes to ensure that the specified pressure is being maintained. If the specified pressure is not being maintained to within ± 5 psi, the LRTD must be reconnected to the air lines and pressure applied throughout the 10 minute test.

7.15 After 10 minutes place the LRTD on the baseplate, reconnect air lines and toggle clamps, and turn off pressure (retract the rod) by pushing the air-valve lever away from the operator. Note time on data sheet.

7.16 When the air gauge reaches 0 psi, disconnect the air lines and remove the pressure-application device by removing the safety key, rotating the device, and lifting it away from the sample holder.

7.17 Screw the piston handle into the top of the piston.

7.18 Lift out the piston.

7.19 Remove the filter paper and immediately examine it for wet spots (wet area on the filter paper). The presence of a wet spot(s) indicates a positive test (i.e., liquid release). Note results on data sheet.

7.20 Release toggle clamps and remove sample holder from baseplate. Invert sample holder onto suitable surface and remove the knob screws holding the bottom plate.

7.21 Remove the bottom plate and immediately examine the filter paper for wet spots as described in Step 7.19. Note results on data sheet. Wet spot(s) on either filter indicates a positive test.

8.0 QUALITY CONTROL

8.1 Duplicate samples should be analyzed every twenty samples or every analytical batch, whichever is more frequent. Refer to Chapter One for additional QC protocols.

9.0 METHOD PERFORMANCE

9.1 Precision and accuracy data are not available at this time.

10.0 REFERENCES

1. Hoffman, P., G. Kingsbury, B. Lesnik, M. Meyers, "Background Document for the Liquid Release Test (LRT) Procedure"; document submitted to the Environmental Protection Agency by Research Triangle Institute: Research Triangle Park, NC under Contract No. 68-01-7075, Work Assignment 76 and Contract No. 68-WO-0032, Work Assignment 12.

FIGURE 1.
LRT DEVICE

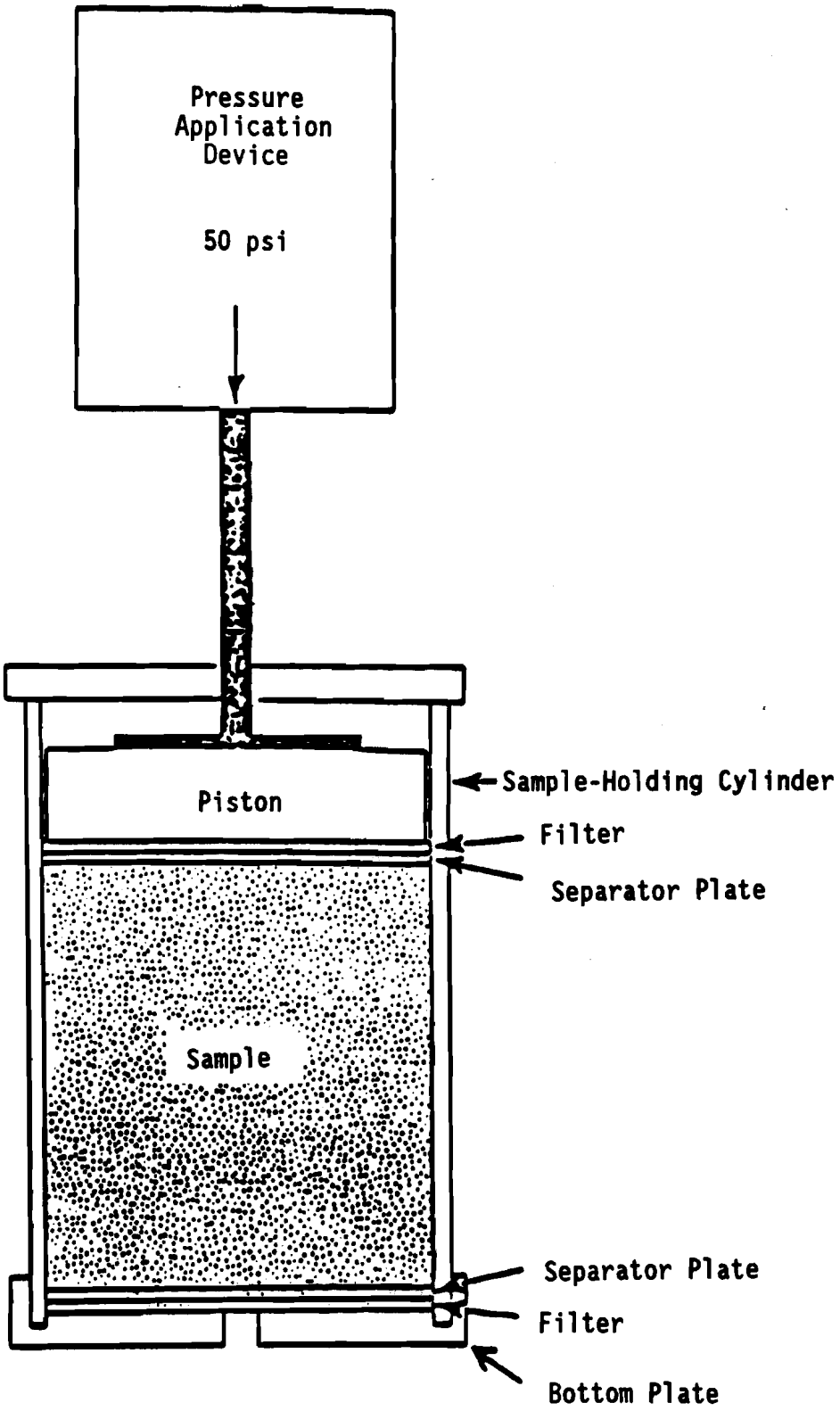

FIGURE 2.
76 MM DIAMETER FILTER PAPER

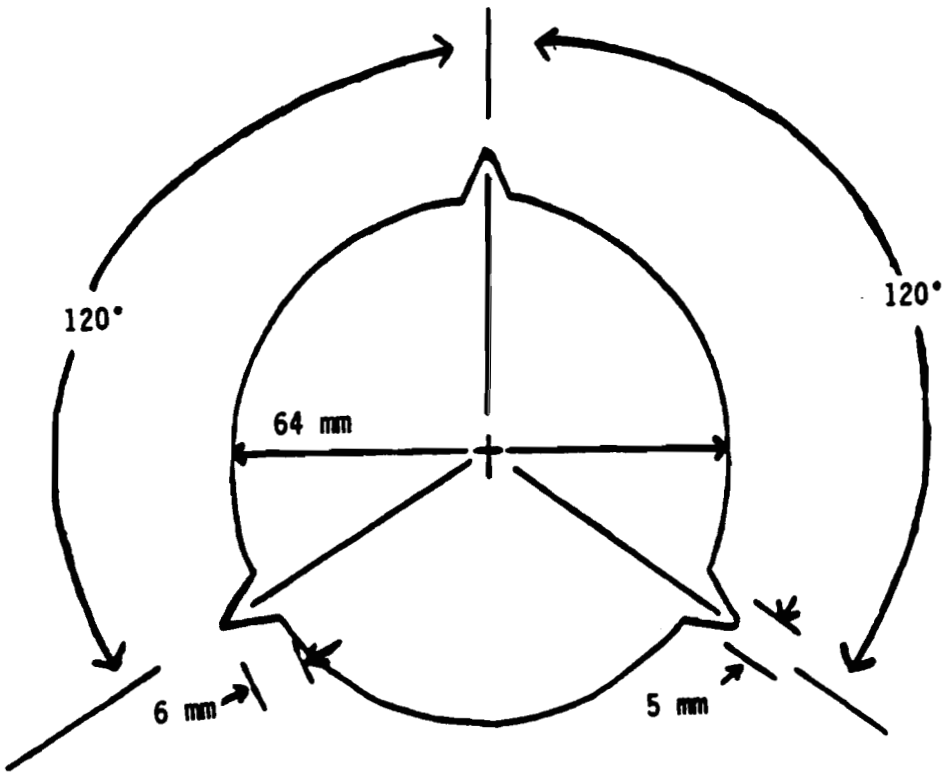

FIGURE 3.
GLASS GRID SPECIFICATIONS.

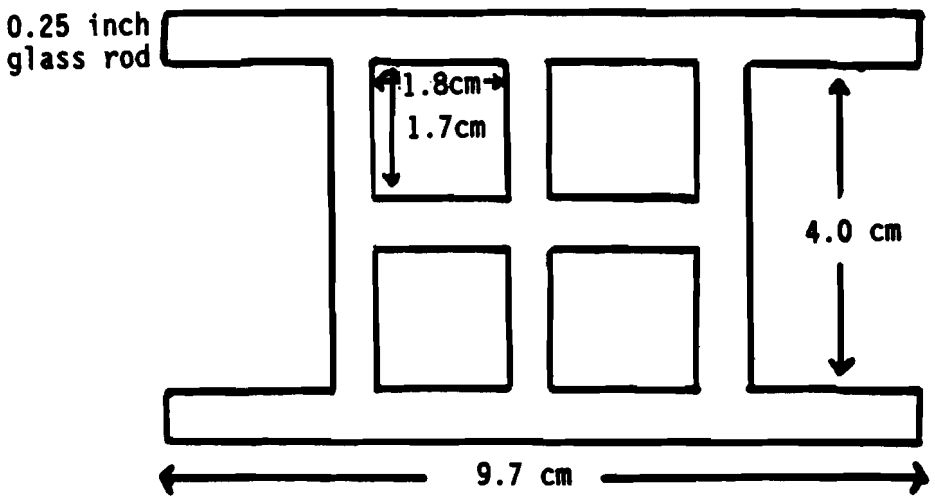

FIGURE 4.
POSITIONING OF DYE ON GLASS PLATE

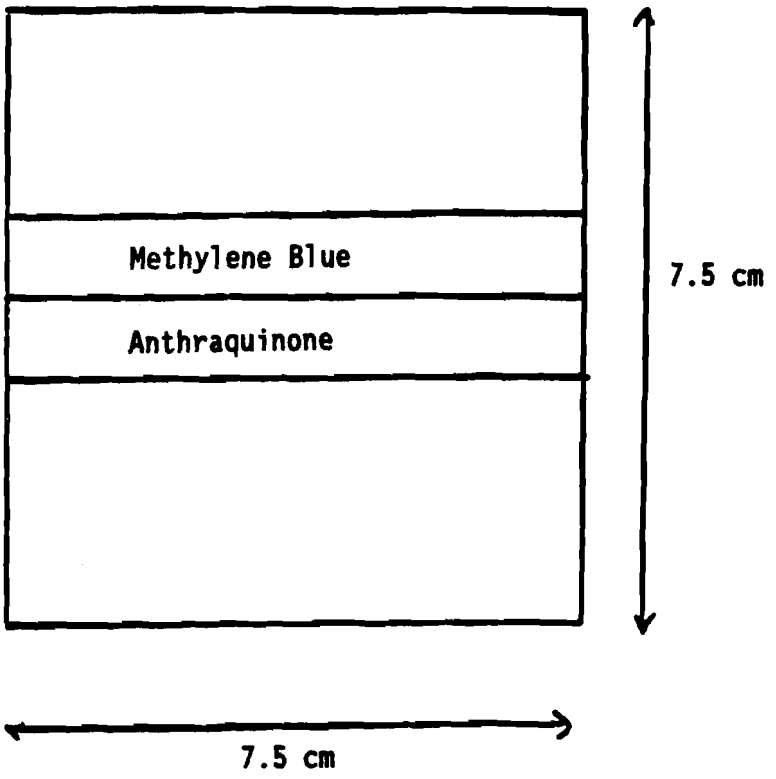

METHOD 9096
LIQUID RELEASE TEST (LRT) PROCEDURE

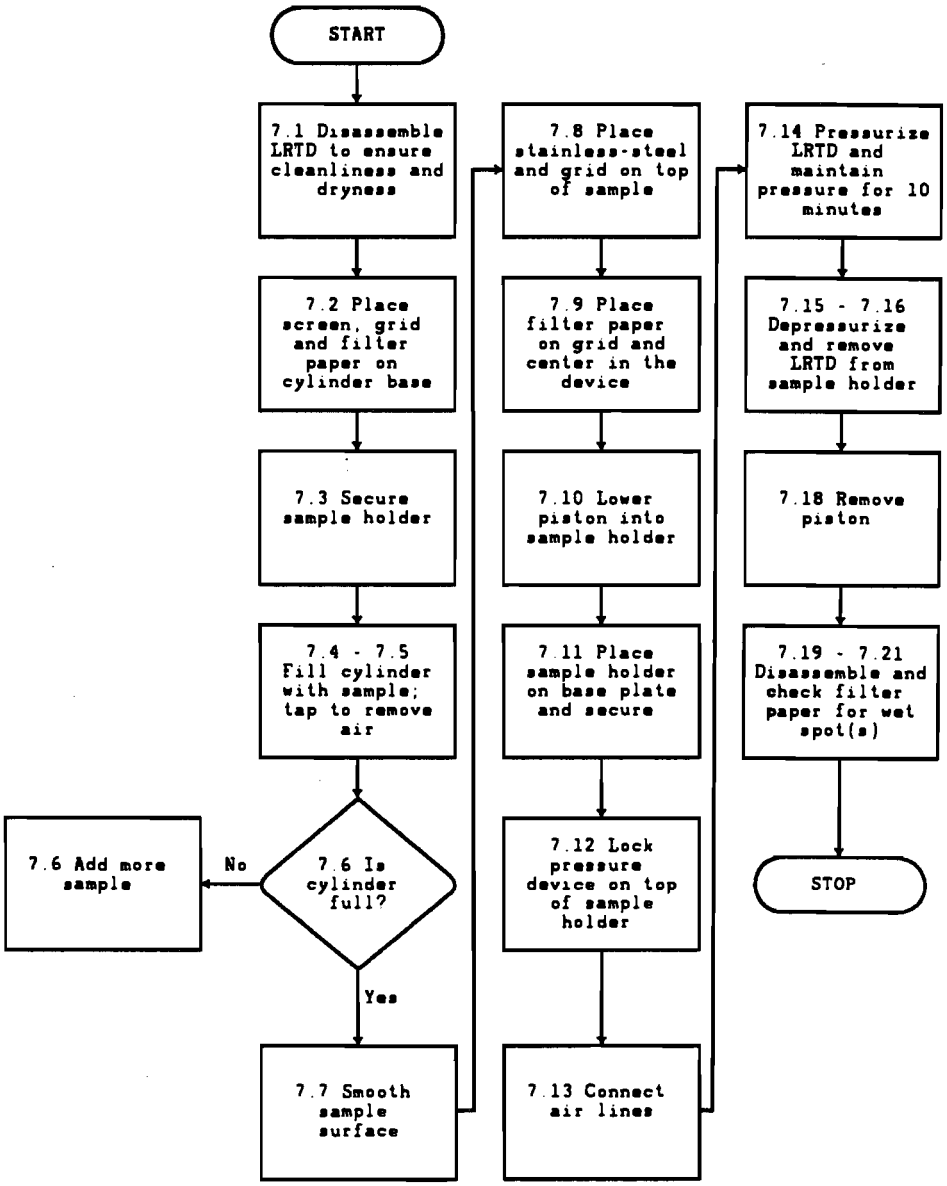

APPENDIX A

LIQUID RELEASE TEST PRE-TEST

1.0 SCOPE AND APPLICATION

1.1 The LRT Pre-Test is an optional, 5 minute laboratory test designed to determine whether or not liquids will be definitely released from sorbents before applying the LRT. This test is performed to prevent unnecessary cleanup and possible damage to the LRT device.

1.2 This test is purely optional and completely up to the discretion of the operator as to when it should be used.

2.0 SUMMARY OF METHOD

A representative sample will be loaded into a glass grid that is placed on a glass plate already stained with 2 dyes (one water soluble and one oil soluble). A second glass plate will be placed on top and a 2 lb. weight placed on top for 5 minutes. At the end of 5 minutes the base of the glass grid is examined for any dye running along the edges, this would indicate a liquid release.

3.0 INTERFERENCES

A liquid release can be detected at lower Liquid Loading Levels with extremely clean glassware. The glass plates and glass grid should be cleaned with a laboratory detergent, rinsed with Deionized water, rinsed with acetone, and thoroughly dried.

4.0 APPARATUS AND MATERIALS

4.1 Glass Plate: 2 glass plates measuring 7.5 cm x 7.5 cm.

4.2 Glass Grid: See Figure 3.

4.3 Paint Brush: Two small paint brushes for applying dyes.

4.4 Spatula: To assist in loading the sample.

4.5 Weight: 2.7 kg weight to apply pressure to the sample.

5.0 REAGENTS

5.1 Reagent grade chemicals shall be used in all tests. Unless otherwise indicated, it is intended that all reagents shall conform to the specifications of the Committee on Analytical Reagents of the American Chemical Society, where such specifications are available. Other grades may be used, provided it is first ascertained that the reagent is of sufficiently high purity to permit its use without lessening the accuracy of the determination.

5.2 Methylene Blue dye in methanol.

5.3 Anthraquinone dye in toluene.

6.0 SAMPLE COLLECTION, PRESERVATION AND HANDLING

See LRT Procedure.

7.0 PROCEDURE

7.1 Paint one strip, approximately 1 cm wide, of methylene blue dye across the center of a clean and dry glass plate (see Figure 4). The dye is allowed to dry.

7.2 Paint one strip, approximately 1 cm wide, of anthraquinone dye across the center of the same glass plate (see Figure 4). This strip should be adjacent to and parallel with the methylene blue strip. The dye is allowed to dry.

7.3 Place the glass grid in the center of the dye-painted glass plate.

7.4 Place a small amount of sample into the glass-grid holes, pressing down gently until the holes are filled to slightly above the grid top.

7.5 Place a second, clean and dry, glass plate on top of the sample and grid.

7.6 Place a 2.7 kg weight on top of the glass for 5 minutes.

7.7 After 5 minutes remove the weight and examine the base of the grid extending beyond the sample holes for any indication of dyed liquid. The entire assembly may be turned upside down for observation. Any indication of liquid constitutes a release and the LRT does not need to be performed.

8.0 QUALITY CONTROL

8.1 Refer to Chapter One for specific quality control procedures.

9.0 METHOD PERFORMANCE

9.1 Precision and accuracy data are not available at this time.

10.0 REFERENCES

1. Research Triangle Institute. "Background Document for the Liquid Release Test: Single Laboratory Evaluation and 1988 Collaborative Study". Submitted to the Environmental Protection Agency under Contract No. 68-01-7075, Work Assignment 76 and Contract No. 68-WO-0032, Work Assignment 12. September 18, 1991.

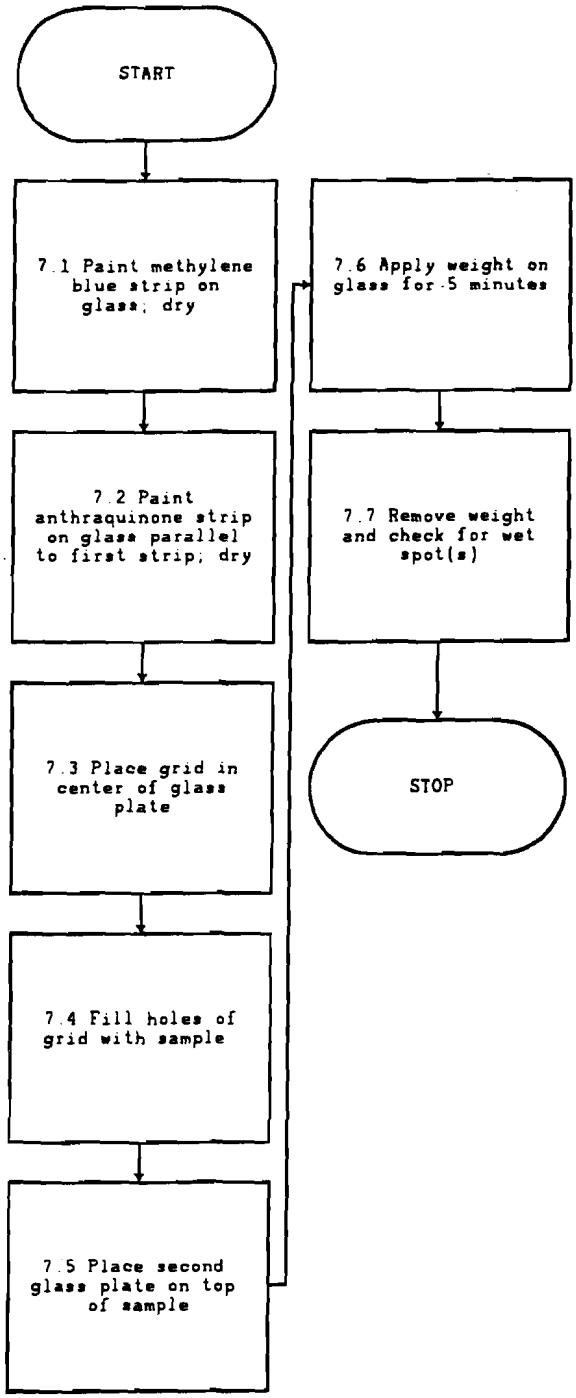
START
7.1 Paint methylene blue strip on glass; dry
7.2 Paint anthraquinone strip on glass parallel to first strip; dry
7.3 Place grid in center of glass plate
7.4 Fill holes of grid with sample
7.5 Place second glass plate on top of sample
7.6 Apply weight on glass for 5 minutes
7.7 Remove weight and check for wet spot(s)
STOP

METHOD 9100

SATURATED HYDRAULIC CONDUCTIVITY, SATURATED LEACHATE CONDUCTIVITY, AND INTRINSIC PERMEABILITY

1.0 INTRODUCTION

1.1 Scope and Application: This section presents methods available to hydrogeologists and and geotechnical engineers for determining the saturated hydraulic conductivity of earth materials and conductivity of soil liners to leachate, as outlined by the Part 264 permitting rules for hazardous-waste disposal facilities. In addition, a general technique to determine intrinsic permeability is provided. A cross reference between the applicable part of the RCRA Guidance Documents and associated Part 264 Standards and these test methods is provided by Table A.

1.1.1 Part 264 Subpart F establishes standards for ground water quality monitoring and environmental performance. To demonstrate compliance with these standards, a permit applicant must have knowledge of certain aspects of the hydrogeology at the disposal facility, such as hydraulic conductivity, in order to determine the compliance point and monitoring well locations and in order to develop remedial action plans when necessary.

1.1.2 In this report, the laboratory and field methods that are considered the most appropriate to meeting the requirements of Part 264 are given in sufficient detail to provide an experienced hydrogeologist or geotechnical engineer with the methodology required to conduct the tests. Additional laboratory and field methods that may be applicable under certain conditions are included by providing references to standard texts and scientific journals.

1.1.3 Included in this report are descriptions of field methods considered appropriate for estimating saturated hydraulic conductivity by single well or borehole tests. The determination of hydraulic conductivity by pumping or injection tests is not included because the latter are considered appropriate for well field design purposes but may not be appropriate for economically evaluating hydraulic conductivity for the purposes set forth in Part 264 Subpart F.

1.1.4 EPA is not including methods for determining unsaturated hydraulic conductivity at this time because the Part 264 permitting standards do not require such determinations.

1.2 Definitions: This section provides definitions of terms used in the remainder of this report. These definitions are taken from U.S. Government publications when possible.

TABLE A

HYDRAULIC AND LINER CONDUCTIVITY DETERMINATION METHODS FOR SURFACE IMPOUNDMENT, WASTE PILE, AND LANDFILL COMPONENTS, AS CITED IN RCRA GUIDANCE DOCUMENTS AND DESCRIBED IN SW-846

Surface Impoundments	Guidance Cite[1] Associated Regulation	Corresponding SW-846 Section
Soil liner hydraulic conductivity	Guidance section D(2)(b)(1) and D(2)(c)(1)/Section 264.221(a),(b)	2.0
Soil liner leachate conductivity	Guidance section D(2)(b)(2) and D(2)(c)(2)	2.11
Leak detection	Guidance section C(2)(a)/ Section 264.222	2.0
Final cover drain layer	Guidance section E(2)(d)(1) Section 264.228	2.0
Final cover low permeability layer	Guidance section E(2)(e)(2)(A)/ Section 264.228	2.0
General hydrogeologic site investigation	264 subpart F	3.0

[1] RCRA Guidance Document: Surface Impoundments, Liner Systems, Final Cover, and Freeboard Control. Issued July, 1982.

(continued on next page)

TABLE A (continued)

Waste Piles	Guidance Cite[2] Associated Regulation	Corresponding SW-846 Section
Soil liner hydraulic conductivity	Guidance section D(2)(b)(i) and D(2)(c)(i)/ Section 264.251(a)(1)	2.0
Soil liner leachate conductivity	Guidance section D(2)(b)(ii) and D(2)(c)(ii)	2.11
Leak detection system	Guidance section C(2)(a)/ Section 264.252(a)	2.0
Leachate collection and renewal system	Guidance section C(2)(a)/ Section 264.251(a)(2)	2.0
General hydrogeologic site investigation	264 subpart F	3.0

[2] RCRA Guidance Document: Waste Pile Design, Liner Systems. Issued July, 1982.

(continued on next page)

TABLE A (continued)

Landfills	Guidance Cite[3] Associated Regulation	Corresponding SW-846 Section
Soil liner hydraulic conductivity	Guidance section D(2)(b)(1)/ Section 264.301(a)(1)	2.0
Soil liner leachate conductivity	Guidance section D(2)(b)(2)	2.11
Leak detection system	Guidance section C(2)(a)/ Section 264.302(a)(3)	2.0
Leachate collection and removal system	Guidance section C(2)(a)/ Section 264.301(a)(2)	2.0
Final cover drain layer	Guidance section E(2)(d)(1)/ Section 264.310(a)(b)	2.0
Final cover low permeability layer	Guidance section E(2)(e)(2)(A) Section 264.310(a)(b)	2.0
General hydrogeologic site investigation	264 subpart F	3.0

[3] RCRA Guidance Document: Landfill Design, Liner Systems and Final Cover. Issued July, 1982.

1.2.1 **Units:** This report uses consistent units in all equations. The symbols used are:

Length = L,
Mass = M, and
Time = T.

1.2.2 **Fluid potential or head** (h): A measure of the potential energy required to move fluid from a point in the porous medium to a reference point. For virtually all situations expected to be found in disposal sites and in ground water systems, h is defined by the following equation:

$$h = h_p + h_z \qquad (1)$$

where:

h is the total fluid potential, expressed as a height of fluid above a reference datum, L;

h_p, the pressure potential caused by the weight of fluid above the point in question, L, is defined by $h_p = P/\rho g$,

where:

P is the fluid pressure at the point in question, $ML^{-1}T^{-2}$,

ρ is the fluid density at the prevailing temperature, ML^{-3}, and

g is the acceleration of gravity, LT^{-2}; and

h_z is the height of the point in question above the reference datum, L.

By knowing h_p and h_z at two points along a flow path and by knowing the distance between these points, the fluid potential gradient can be determined.

1.2.3 **Hydraulic potential or head:** The fluid potential when water is the fluid.

1.2.4 **Hydraulic conductivity:** The fluid potential when water is the fluid. The generic term, fluid conductivity, is discussed below in 1.2.5.

1.2.5 **Fluid conductivity** (K): Defined as the volume of fluid at the prevailing density and dynamic viscosity that will move in a unit time under a unit fluid potential gradient through a unit area measured at right angles to the direction of flow. It is a property of both the fluid and the porous medium as shown by the following equation:

$$K = \frac{k\rho g}{u} ; \qquad (2)$$

where:

K is the fluid conductivity, LT^{-1};

k is the intrinsic permeability, a property of the porous medium alone, L^2; and

u is the dynamic viscosity of the fluid at the prevailing temperature, $ML^{-1}\ T^{-1}$.

The fluid conductivity of a porous material is also defined by Darcy's law, which states that the fluid flux (q) through a porous medium is proportional to the first power of the fluid potential across the unit area:

$$q = \frac{Q}{A} = -KI \qquad (3)$$

where:

q = the specific fluid flux, LT^{-1},

Q is the volumetric fluid flux, L^3T^{-1},

A is the cross-sectional area, L^2, and

I is the fluid potential gradient, L^0.

Darcy's law provides the basis for all methods used to determine hydraulic conductivity in this report. The range of validity of Darcy's law is discussed in Section 1.5 (Lohman, 1972).

1.2.6 **Leachate conductivity:** The fluid conductivity when leachate is the fluid.

1.2.7 **Aquifer:** A geologic formation, group of formations, or part of a formation capable of yielding a significant amount of ground water to wells or springs (40 CFR 260.10).

1.2.8 **Confining layer:** By strict definition, a body of impermeable material stratigraphically adjacent to one or more aquifers. In nature, however, its hydraulic conductivity may range from nearly zero to some value distinctly lower than that of the aquifer. Its conductivity relative to that of the aquifer it confines should be specified or indicated by a suitable modifier, such as "slightly permeable" or "moderately permeable" (Lohman, 1972).

1.2.9 **Transmissivity, T [L^2, T^{-1}]:** The rate at which water of the prevailing kinematic viscosity is transmitted through a unit width of the aquifer under a unit hydraulic gradient. Although spoken of as a

property of the aquifer, the term also includes the saturated thickness of the aquifer and the properties of the fluid. It is equal to an integration of the hydraulic conductivities across the saturated part of the aquifer perpendicular to the flow paths (Lohman, 1972).

1.3 Temperature and viscosity corrections: By using Equation (2), corrections to conditions different from those prevailing during the test can be made. Two types of corrections can commonly be made: a correction for a temperature that varies from the test temperature, and a correction for fluids other than that used for the test. The temperature correction is defined by:

$$K_f = \frac{K_t \, u_t \, \rho_f}{u_f \, \rho_t} \tag{4}$$

where:

the subscript f refers to field conditions, and

the subscript t refers to test conditions.

Most temperature corrections are necessary because of the dependence of viscosity on temperature. Fluid density variations caused by temperature changes are usually very small for most liquids. The temperature correction for water can be significant. Equation (4) can also be used to determine hydraulic conductivity if fluids other than water are used. It is assumed, however, when using Equation (4) that the fluids used do not alter the intrinsic permeability of the porous medium during the test. Experimental evidence shows that this alteration does occur with a wide range of organic solvents (Anderson and Brown, 1981). Consequently, it is recommended that tests be run using fluids, such as leachates, that might occur at each particular site. Special considerations for using non-aqueous fluids are given in Section 3.3 of this report.

1.4 Intrinsic permeability (k): Rearrangement of Equation 2 results in a definition of intrinsic permeability:

$$k = \frac{Ku}{\rho g} \, . \tag{5}$$

Since this is a property of the medium alone, if fluid properties change, the fluid conductivity must also change to keep the intrinsic permeability a constant. By using measured fluid conductivity, and values of viscosity and density for the fluid at the test temperature, intrinsic permeability can be determined.

1.5 Range of validity of Darcy's law: Determination of fluid conductivities using both laboratory and field methods requires assuming the validity of Darcy's law. Experimental evidence has shown that deviations from the linear dependence of fluid flux on potential gradient exist for both extremely low and extremely high gradients (Hillel, 1971; Freeze and Cherry, 1979). The lower limits are the result of the existence of threshold

gradients required to initiate flow (Swartzendruber, 1962). The upper limits to the validity of Darcy's law can be estimated by the requirements that the Reynolds number, Re, in most cases be kept below 10 (Bear, 1972). The Reynolds number is defined by:

$$Re = \frac{\rho q d}{u} \tag{6}$$

where:

d is some characteristic dimension of the system, often represented by the median grain size diameter, D_{50}, (Bouwer, 1978), and

q is the fluid flux per unit area, LT^{-1}.

For most field situations, the Reynolds number is less than one, and Darcy's law is valid. However, for laboratory tests it may be possible to exceed the range of validity by the imposition of high potential gradients. A rough check on acceptable gradients can be made by substituting Darcy's law in Equation (6) and using an upper limit of 10 for Re:

$$I \lesssim \frac{10u}{\rho K D_{50}} \tag{7}$$

where:

K is the approximate value of fluid conductivity determined at gradient I.

A more correct check on the validity of Darcy's law or the range of gradients used to determine fluid conductivity is performed by measuring the conductivity at three different gradients. If a plot of fluid flux versus gradient is linear, Darcy's law can be considered to be valid for the test conditions.

1.6 Method Classification: This report classifies methods of determining fluid conductivity into two divisions: laboratory and field methods. Ideally, and whenever possible, compliance with Part 264 disposal facility requirements should be evaluated by using field methods that test the materials under in-situ conditions. Field methods can usually provide more representative values than laboratory methods because they test a larger volume of material, thus integrating the effects of macrostructure and heterogeneities. However, field methods presently available to determine the conductivity of compacted fine-grained materials in reasonable times require the tested interval to be below a water table or to be fairly thick, or require excavation of the material to be tested at some point in the test. The integrity of liners and covers should not be compromised by the installation of boreholes or piezometers required for the tests. These restrictions generally lead to the requirement that the fluid conductivity of liner and cover materials must be determined in the laboratory. The transfer value of laboratory data to field conditions can be maximized for liners and covers because it is possible to reconstruct relatively accurately the desired

field conditions in the laboratory. However, field conditions that would alter the values determined in the laboratory need to be addressed in permit applications. These conditions include those that would increase conductivity by the formation of microcracks and channels by repeated wetting and drying, and by the penetration of roots.

1.6.1 **Laboratory methods** are categorized in Section 2.0 by the methods used to apply the fluid potential gradient across the sample. The discussion of the theory, measurement, and computations for tests run under constant and falling-head conditions is followed by a detailed discussion of tests using specific types of laboratory apparatus and the applicability of these tests to remolded compacted, fine-grained uncompacted, and coarse-grained porous media. Section 2.3 provides a discussion of the special considerations for conducting laboratory tests using non-aqueous permeants. Section 2.10 gives a discussion of the sources of error and guidance for establishing the precision of laboratory tests. Laboratory methods may be necessary to measure vertical fluid conductivity. Values from field tests reflect effects of horizontal and vertical conductivity.

1.6.2 **Field methods** are discussed in Section 3.0 and are limited to those requiring a single bore hole or piezometer. Methods requiring multiple bore holes or piezometers and areal methods are included by reference. Because of the difficulties in determining fluid conductivity of in-place liner and cap materials under field conditions without damaging their integrity, the use of field methods for fine-grained materials will be generally restricted to naturally occurring materials that may serve as a barrier to fluid movement. Additional field methods are referenced that allow determination of saturated hydraulic conductivity of the unsaturated materials above the shallowest water table. General methods for fractured media are given in Section 3.8. A discussion of the important considerations in well installation, construction, and development is included as an introduction to Section 3.0.

2.0 LABORATORY METHODS

2.1 Sample collection for laboratory method: To assure that a reasonable assessment is made of field conditions at a disposal site, a site investigation plan should be developed to direct sampling and analysis. This plan generally requires$the professional judgement of an experienced hydrogeologist or geotechnical engineer. General guidance is provided for plan development in the Guidance Manual for Preparation of a Part 264 land Disposal Facility Permit Application (EPA, in press). The points listed below should be followed:

- The hydraulic conductivity of a soil liner should be determined either from samples that are processed to simulate the actual liner, or from an undisturbed sample of the complete liner.

- To obtain undisturbed samples, the thin-walled tube sampling method (ASTM Method # D1587-74) or a similar method may be used. Samples representative of each lift of the liner should be obtained, and used in the analyses. If actual undisturbed samples are not used, the soil used in liner construction must be processed to represent accurately the liner's initial water content and bulk density. The method described in Section 2.7.3 or ASTM Method #D698-70 (ASTM, 1978) can be used for this purpose.

- For purpose of the general site investigation, the general techniques presented in ASTM method #D420-69 (ASTM, 1978) should be followed. This reference establishes practices for soil and rock investigation and sampling, and incorporates various detailed ASTM procedures for investigation, sampling, and material classification.

2.2 Constant-head methods: The constant-head method is the simplest method of determining hydraulic conductivity of saturated soil samples. The concept of the constant-head method is schematically illustrated in Figure 1. The inflow of fluid is maintained at a constant head (h) above a datum and outflow (Q) is measured as a function of time (t). Using Darcy's law, the hydraulic conductivity can be determined using the following equation after the outflow rate has become constant:

$$K = QL/hA, \tag{8}$$

where:

K = hydraulic conductivity, LT^{-1};

L = length of sample, L;

A = cross-sectional area of sample, L^2;

Q = outflow rate, L^3T^{-1}; and

h = fluid head difference across the sample, L.

Constant-head methods should be restricted to tests on media having high fluid conductivity.

2.3 Falling-head methods: A schematic diagram of the apparatus for the falling-head method is shown in Figure 2. The head of inflow fluid decreases from h_1 to h_2 as a function of time (t) in a standpipe directly connected to the specimen. The fluid head at the outflow is maintained constant. The quantity of outflow can be measured as well as the quantity of inflow. For the setup shown in Figure 2a, the hydraulic conductivity can be determined using the following equation:

$$K = \frac{2.3\ aL}{At} \log_{10} \frac{h_0}{h_1}, \tag{9}$$

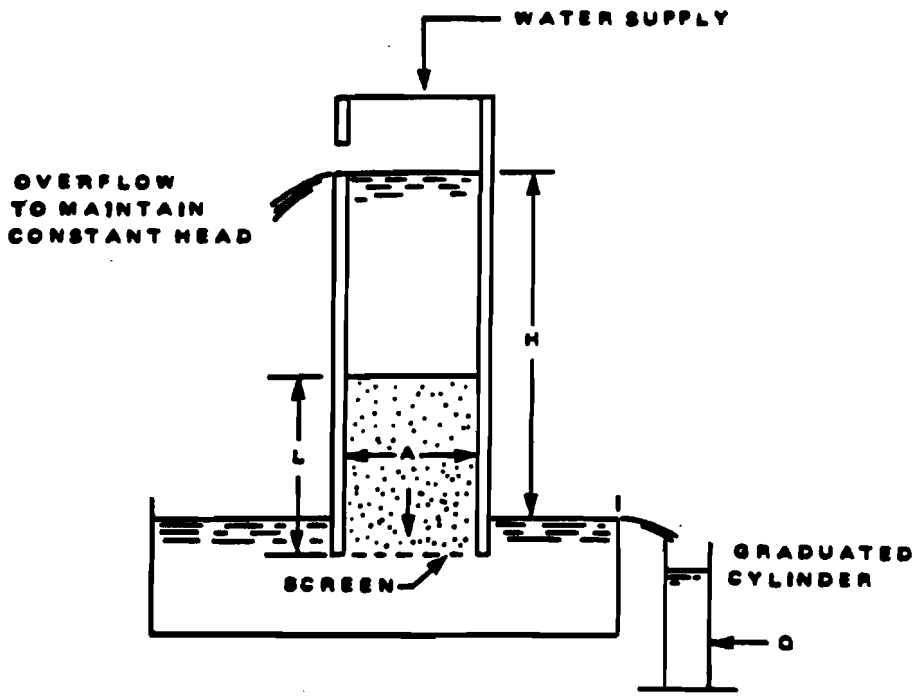

Figure 1.--Principle of the constant head method

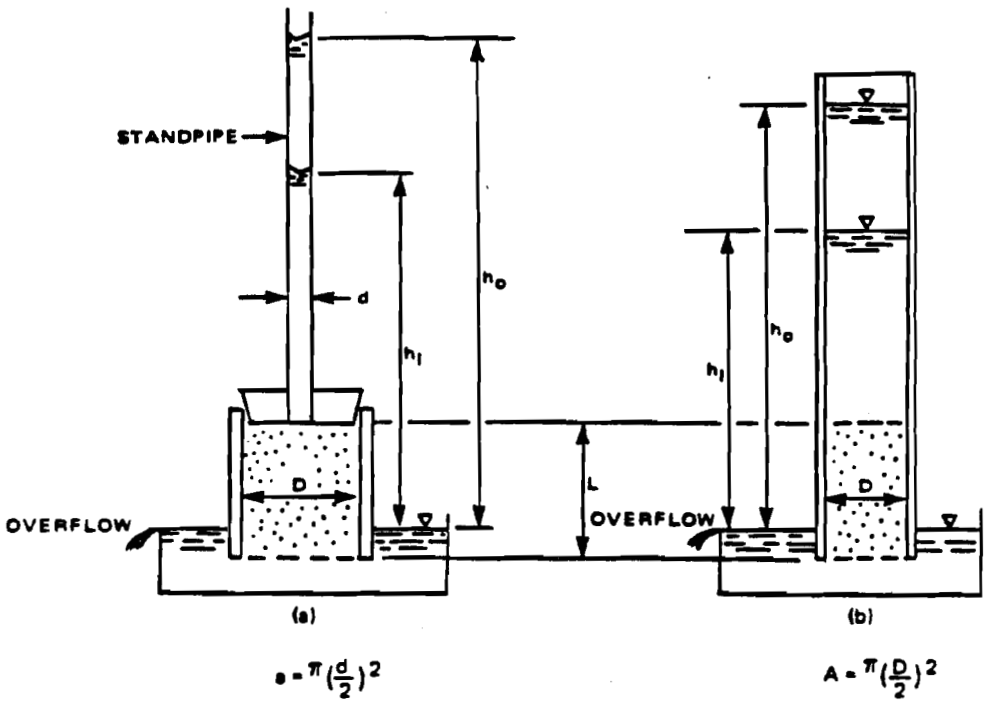

Figure 2.--Principle of the falling head method using a small (a) and large (b) standpipe.

where:

a = the cross-sectional area of the standpipe, L^2;

A = the cross-sectional area of the specimen, L^2;

L = the length of the specimen, L; and

t = elapsed time from t_1 to t_2, T.

For the setup in Figure 2b, the term a/A in Equation (9) is replaced by 1.0. Generally, falling-head methods are applicable to fine-grained soils because the testing time can be accelerated.

2.4 General test considerations:

2.4.1 **Fluid supplies to be used:** For determining hydraulic conductivity and leachate conductivity, the supplies of permeant fluid used should be de-aired. Air coming out of solution in the sample can significantly reduce the measured fluid conductivity. Deairing can be achieved by boiling the water supply under a vacuum, bubbling helium gas through the supply, or both.

2.4.1.1 Significant reductions in hydraulic conductivity can also occur in the growth and multiplication of microorganisms present in the sample. If it is desirable to prevent such growth, a bactericide or fungicide, such as 2000 ppm formaldehyde or 1000 ppm phenol (Olsen and Daniel, 1981), can be added to the fluid supply.

2.4.1.1 Fluid used for determining hydraulic conductivity in the laboratory should never be distilled water. Native ground water from the aquifer underlying the sampled area or water prepared to simulate the native ground water chemistry should be used.

2.4.2 **Pressure and Fluid Potential Measurement:** The equations in this report are all dimensionally correct; that is, any consistent set of units may be used for length, mass, and time. Consequently, measurements of pressure and/or fluid potential using pressure gages and manometers must be reduced to the consistent units used before applying either Equation 8 or 9. Pressures or potentials should be measured to within a few tenths of one percent of the gradient applied across the sample.

2.5 Constant-head test with conventional permeameter:

2.5.1 **Applicability:** This method covers the determination of the hydraulic conductivity of soils by a constant-head method using a conventional permeameter. This method is recommended for disturbed coarse-grained soils. If this method is to be used for fine-grained soils, the testing time may be prohibitively long. This method was taken from the Engineering and Design, Laboratory Soils Testing Manual (U.S. Army, 1980). It parallels ASTM Method D2434-68 (ASTM,1978). The ASTM

method gives extensive discussion of sample preparation and applicability and should be reviewed before conducting constant-head tests. Lambe (1951) provides additional information on sample preparation and equipment procedures.

2.5.2 **Apparatus:** The apparatus is shown schematically in Figure 3. It consists of the following:

1. A permeameter cylinder having a diameter at least 8 times the diameter of the largest particle of the material to be tested;
2. Constant-head filter tank;
3. Perforated metal disks and circular wire to support the sample;
4. Filter materials such as Ottawa sand, coarse sand, and gravel of various gradations;
5. Manometers connected to the top and bottom of the sample;
6. Graduated cylinder, 100-mL capacity;
7. Thermometer;
8. Stop watch;
9. Deaired water;
10. Balance sensitive to 0.1 gram; and
11. Drying oven.

2.5.3 **Sample preparation:**

1. Oven-dry the sample. Allow it to cool, and weigh to the nearest 0.1 g. Record the oven-dry weight of material. The amount of material should be sufficient to provide a specimen in the permeameter having a minimum length of about one to two times the diameter of the specimen.
2. Place a wire screen, with openings small enough to retain the specimen, over a perforated disk near the bottom of the permeameter above the inlet. The screen opening should be approximately equal to the 10 percent size of the specimen.
3. Allow deaired water to enter the water inlet of the permeameter to a height of about 1/2 in. above the bottom of the screen, taking care that no air bubbles are trapped under the screen.

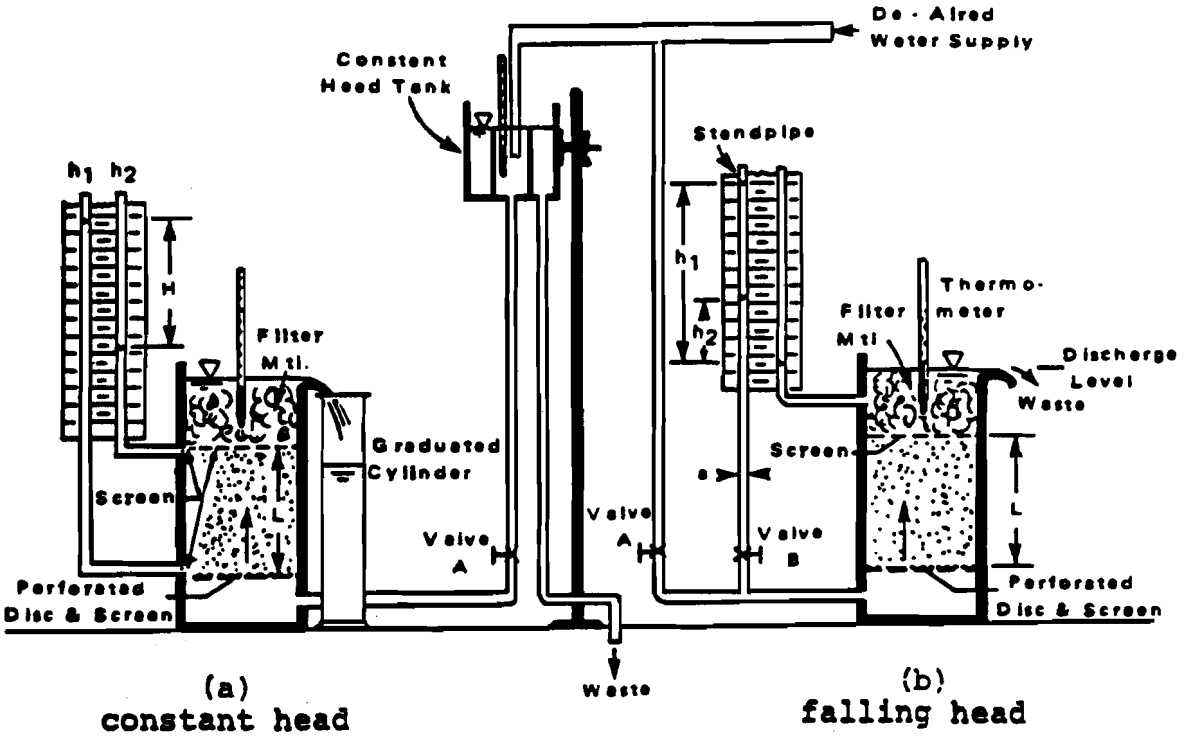

Figure 3.-- Apparatus setup for the constant head (a) and falling head (b) methods.

4. Mix the material thoroughly and place in the permeameter to avoid segregation. The material should be dropped just at the water surface, keeping the water surface about 1/2 in. above the top of the soil during placement. A funnel or a spoon is convenient for this purpose.

5. The placement procedure outlined above will result in a saturated specimen of uniform density although in a relatively loose condition. To produce a higher density in the specimen, the sides of the permeameter containing the soil sample are tapped uniformly along its circumference and length with a rubber mallet to produce an increase in density; however, extreme caution should be exercised so that fines are not put into suspension and segregated within the sample. As an alternative to this procedure, the specimen may be placed using an appropriate sized funnel or spoon. Compacting the specimen in layers is not recommended, as a film of dust which might affect the permeability results may be formed at the surface of the compacted layer. After placement, apply a vacuum to the top of the specimen and permit water to enter the evacuated specimen through the base of the permeameter.

6. After the specimen has been placed, weigh the excess material, if any, and the container. The specimen weight is the difference between the original weight of sample and the weight of the excess material. Care must be taken so that no material is lost during placement of the specimen. If there is evidence that material has been lost, oven-dry the specimen and weigh after the test as a check.

7. Level the top of the specimen, cover with a wire screen similar to that used at the base, and fill the remainder of the permeameter with a filter material.

8. Measure the length of the specimen, inside diameter of the permeameter, and distance between the centers of the manometer tubes (L) where they enter the permeameter.

2.5.4 Test procedure:

1. Adjust the height of the constant-head tank to obtain the desired hydraulic gradient. The hydraulic gradient should be selected so that the flow through the specimen is laminar. Hydraulic gradients ranging from 0.2 to 0.5 are recommended. Too high a hydraulic gradient may cause turbulent flow and also result in piping of soils. In general, coarser soils require lower hydraulic gradients. See Section 1.5 for further discussion of excessive gradients.

2. Open valve A (see Figure 3a) and record the initial piezometer readings after the flow has become stable. Exercise care in building up heads in the permeameter so that the specimen is not disturbed.

3. After allowing a few minutes for equilibrium conditions to be reached, measure by means of a graduated cylinder the quantity of discharge corresponding to a given time interval. Measure the piezometric heads (h_1 and h_2) and the water temperature in the permeameter.

4. Record the quantity of flow, piezometer readings, water temperature, and the time interval during which the quantity of flow was measured.

2.5.5 **Calculations:** By plotting the accumulated quantity of outflow versus time on rectangular coordinate paper, the slope of the linear portion of the curve can be determined, and the hydraulic conductivity can be calculated using Equation (8). The value of h in Equation (8) is the difference between h_1 and h_2.

2.6 Falling-head test with conventional permeameter:

2.6.1 **Applicability:** The falling-head test can be used for all soil types, but is usually most widely applicable to materials having low permeability. Compacted, remolded, fine-grained soils can be tested with this method. This method presented is taken from the Engineering and Design, Laboratory Soils Testing Manual (U.S. Army, 1980).

2.6.2 **Apparatus:** The schematic diagram of the falling-head permeameter is shown in Figure 3b. The permeameter consists of the following equipment:

1. Permeameter cylinder, a transparent acrylic cylinder having a diameter at least 8 times the diameter of the largest particles;

2. Porous disk;

3. Wire screen;

4. Filter materials;

5. Manometer;

6. Timing device; and

2.6.3 **Sample Preparation:** Sample preparation for coarse-grained soils is similar to that described previously in Section 2.4.3. For fine-grained soils, samples are compacted to the desired density using methods described in ASTM Method D698-70.

2.6.4 **Test Procedure:**

1. Measure and record the height of the specimen, L, and the cross-sectional area of the specimen, A.

2. With valve B open (see Figure 3b), crack valve A, and slowly bring the water level up to the discharge level of the permeameter.

3. Raise the head of water in the standpipe above the discharge level of the permeameter. The difference in head should not result in an excessively high hydraulic gradient during the test. Close valves A and B.

4. Begin the test by opening valve B. Start the timer. As the water flows through the specimen, measure and record the height of water in the standpipe above the discharge level, h_1, at time t_1, and the height of water above the discharge level, h_2 at time t_2.

2.6.5 **Calculations.** From the test data, plot the logarithm of head versus time on rectangular coordinate paper, or use semi-log paper. The slope of the linear part of the curve is used to determine $\log_{10}(h_1/h_2)/t$. Calculate the hydraulic conductivity using Equation (9).

2.7 Modified compaction permeameter method:

2.7.1 **Applicability:** This method can be used to determine the hydraulic conductivity of a wide range of materials. The method is generally used for remolded fine-grained soils. The method is generally used under constant-head conditions. The method was taken from Anderson and Brown, 1981, and EPA (1980). It should be noted that this method method of Section 2.9.

2.7.2 **Apparatus:** The apparatus is shown in Figure 4 and consists of equipment and accessories as follows:

1. Soil chamber, a compaction mold having a diameter 8 times larger than the diameter of the largest particles (typically, ASTM standard mold, Number CN405, is used);

2. Fluid chamber, a compaction mold sleeve having the same diameter as the soil chamber;

3. 2-kg hammer;

4. Rubber rings used for sealing purposes;

5. A coarse porous stone having higher permeability than the tested sample;

6. Regulated source of compressed air; and

7. Pressure gage or manometer to determine the pressure on the fluid chamber.

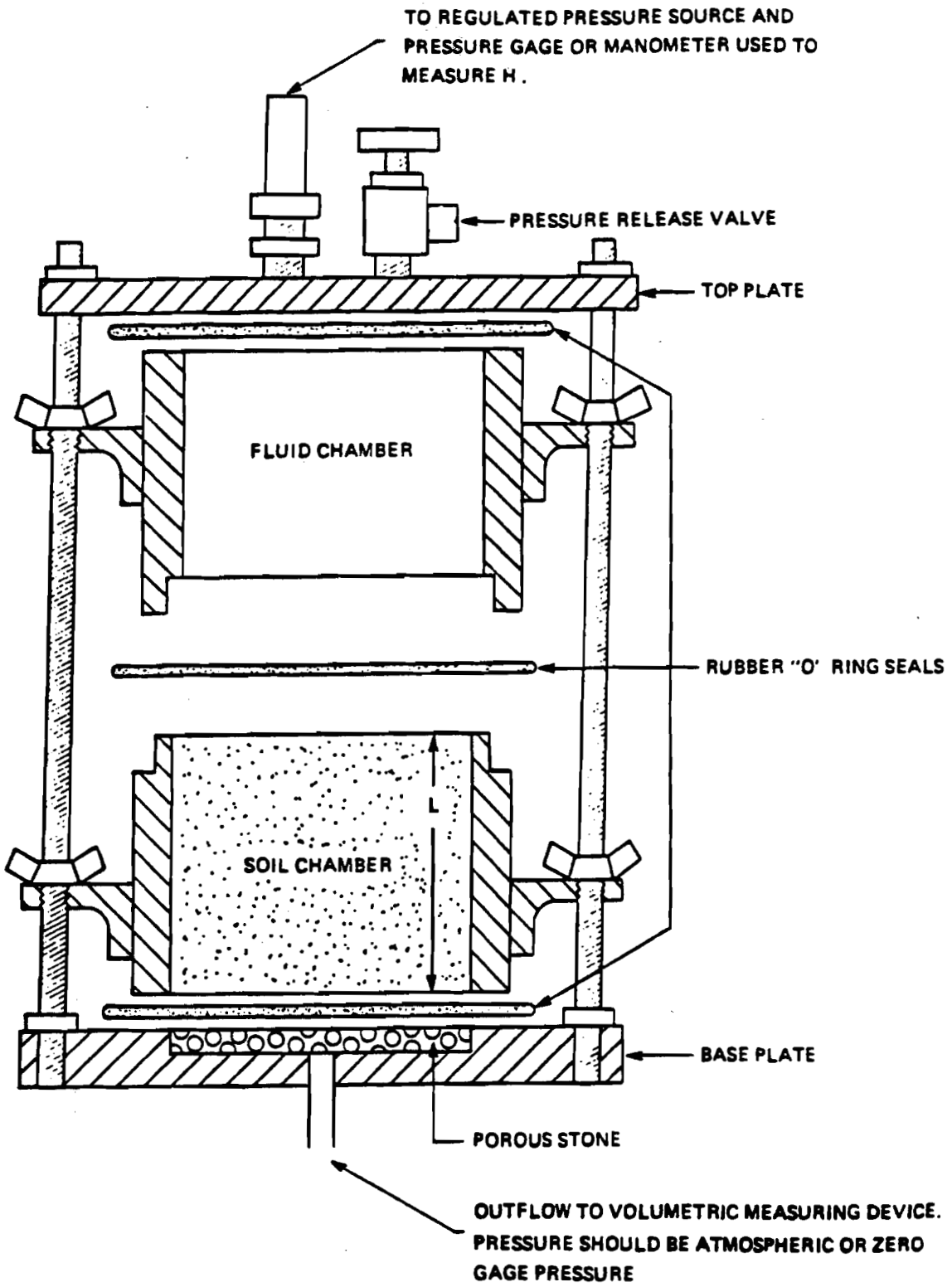

Figure 4.--Modified compaction permeameter. Note: h in Equation 8 is the difference between the regulated inflow pressure and the outflow pressure. Source: Anderson and Brown, 1981.

2.7.3 **Sample preparation:**

1. Obtain sufficient representative soil sample. Air dry the sample at room temperature. Do not oven dry.

2. Thoroughly mix the selected representative sample with water to obtain a desired moisture content.

3. Compact the sample to the desired density within the mold using the method described as part of ASTM Method D698-70.

4. Level the surface of the compacted sample with straight edge, weigh and determine the density of the sample.

5. Measure the length and diameter of the sample.

6. Assemble the apparatus, make sure that there are no leaks, and then connect the pressure line to the apparatus.

2.7.4 **Test procedure:**

1. Place sufficient volume of water in the fluid chamber above the soil chamber.

2. Apply air pressure gradually to flush water through the sample until no air bubbles in the outflow are observed. For fine-grained soils, the saturation may take several hours to several days, depending on the applied pressure.

3. After the sample is saturated, measure and record the quantity of outflow versus time.

4. Record the pressure reading (h) on the top of the fluid chamber when each reading is made.

5. Plot the accumulated quantity of outflow versus time on rectangular coordinate paper.

6. Stop taking readings as soon as the linear position of the curve is defined.

2.7.5 **Calculations:** The hydraulic conductivity can be calculated using Equation (8).

2.8 Triaxial-cell method with back pressure:

2.8.1 **Applicability:** This method is applicable for all soil types, but especially for fine-grained, compacted, cohesive soils in which full fluid saturation of the sample is difficult to achieve. Normally, the test is run under constant-head conditions.

2.8.2 **Apparatus:** The apparatus is similar to conventional triaxial apparatus. The schematic diagram of this apparatus is shown in Figure 5.

2.8.3 **Sample preparation:** Disturbed or undisturbed samples can be tested. Undisturbed samples must be trimmed to the diameter of the top cap and base of the triaxial cell. Disturbed samples should be prepared in the mold using either kneading compaction for fine-grained soils, or by the pouring and vibrating method for coarse-grained soils, as discussed in Section 2.5.3.

2.8.4 **Test procedure:**

1. Measure the dimensions and weight of the prepared sample.

2. Place one of the prepared specimens on the base.

3. Place a rubber membrane in a membrane stretcher, turn both ends of the membrane over the ends of the stretcher, and apply a vacuum to the stretcher. Carefully lower the stretcher and membrane over the specimen. Place the specimen and release the vacuum on the membrane stretcher. Turn the ends of the membrane down around the base and up around the specimen cap and fasten the ends with O-rings.

4. Assemble the triaxial chamber and place it in position in the loading device. Connect the tube from the pressure reservoir to the base of the triaxial chamber. With valve C (see Figure 5) on the pressure reservoir closed and valves A and B open, increase the pressure inside the reservoir, and allow the pressure fluid to fill the triaxial chamber. Allow a few drops of the pressure fluid to escape through the vent valve (valve B) to insure complete filling of the chamber with fluid. Close valve A and the vent valve.

5. Place saturated filter paper disks having the same diameter as that of the specimen between the specimen and the base and cap; these disks will also facilitate removal of the specimen after the test. The drainage lines and the porous inserts should be completely saturated with deaired water. The drainage lines should be as short as possible and made of thick-walled, small-bore tubing to insure minimum elastic changes in volume due to changes in pressure. Valves in the drainage lines (valves E, F, and G in Figure 5) should preferably be of a type which will cause no discernible change of internal volume when operated. While mounting the specimen in the compression chamber, care should be exercised to avoid entrapping any air beneath the membrane or between the specimen and the base and cap.

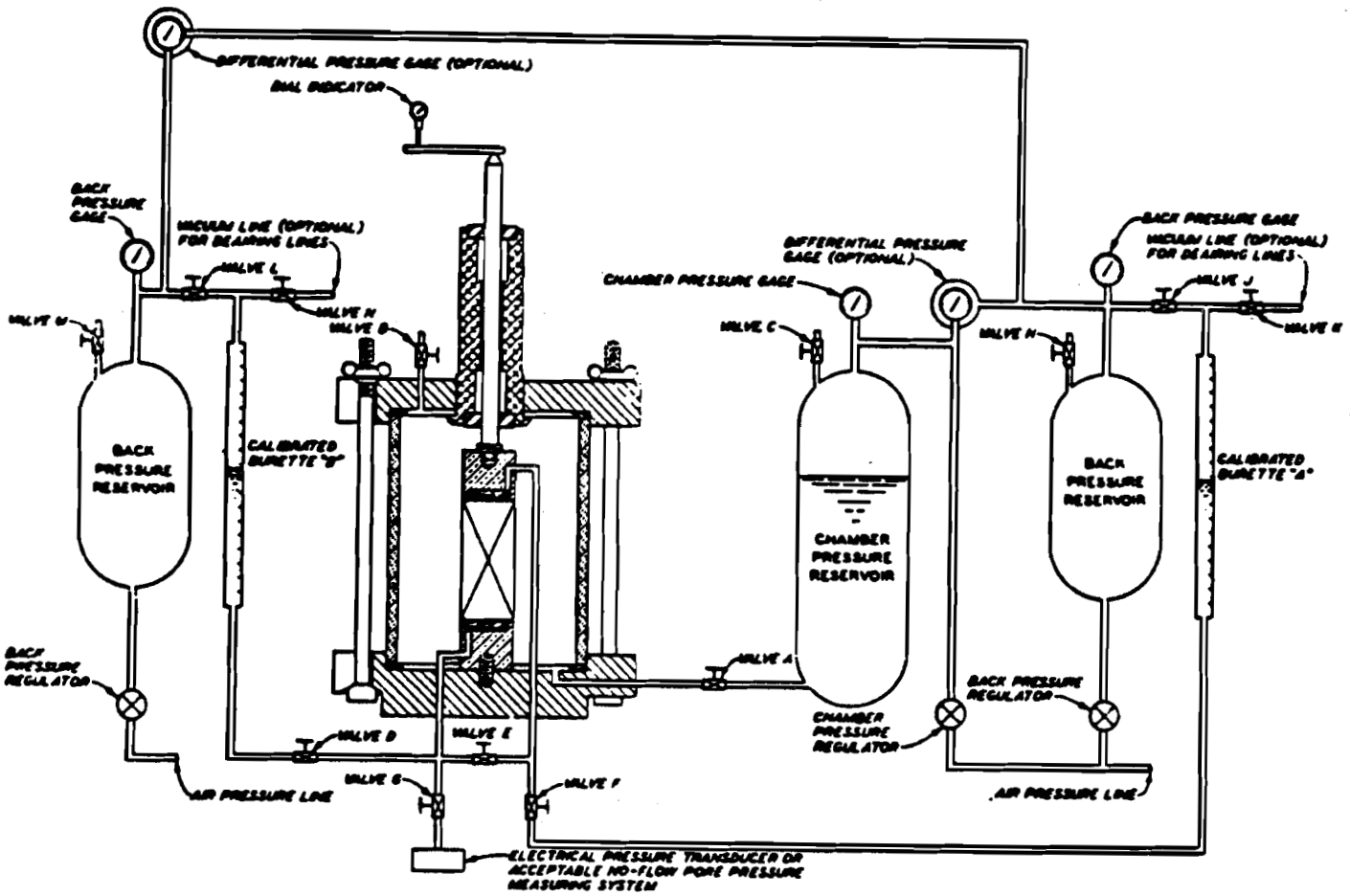

Figure 5.--Schematic diagram of typical triaxial compression apparatus for hydraulic conductivity tests with back pressure.
Source: U.S. Army Corps of Engineers, 1970

6. For ease and uniformity of saturation, as well as to allow volume changes during consolidation to be measured with the burette, specimens should be completely saturated before any appreciable consolidation is permitted; therefore, the difference between the chamber pressure and the back pressure should not exceed 5 psi during the saturation phase. To insure that a specimen is not prestressed during the saturation phase, the back pressure must be applied in small increments, with adequate time between increments to permit equalization of pore water pressure throughout the specimen.

7. With all valves closed, adjust the pressure regulators to a chamber pressure of about 7 psi and a back pressure of about 2 psi. Now open valve A to apply the preset pressure to the chamber fluid and simultaneously open valve F to apply the back pressure through the specimen cap. Immediately open valve G and read and record the pore pressure at the specimen base. When the measured pore pressure becomes essentially constant, close valves F and G and record the burette reading.

8. Using the technique described in Step 3, increase the chamber pressure and the back pressure in increments, maintaining the back pressure at about 5 psi less than the chamber pressure. The size of each increment might be 5, 10, or even 20 psi, depending on the compressibility of the soil specimen and the magnitude of the desired consolidation pressure. Open valve G and measure the pore pressure at the base immediately upon application of each increment of back pressure and observe the pore pressure until it becomes essentially constant. The time required for stabilization of the pore pressure may range from a few minutes to several hours depending on the permeability of the soil. Continue adding increments of chamber pressure and back pressure until, under any increment, the pore pressure reading equals the applied back pressure immediately upon opening valve G.

9. Verify the completeness of saturation by closing valve F and increasing the chamber pressure by about 5 psi. The specimen shall not be considered completely saturated unless the increase in pore pressure immediately equals the increase in chamber pressure.

10. When the specimen is completely saturated, increase the chamber pressure with the drainage valves closed to attain the desired effective consolidation pressure (chamber pressure minus back pressure). At zero elapsed time, open valves E and F.

11. Record time, dial indicator reading, and burette reading at elapsed times of 0, 15, and 30 sec, 1, 2, 4, 8, and 15 min, and 1, 2, 4, and 8 hr, etc. Plot the dial indicator readings and

burette readings on an arithmetic scale versus elapsed time on a log scale. When the consolidation curves indicate that primary consolidation is complete, close valves E and F.

12. Apply a pressure to burette B greater than that in burette A. The difference between the pressures in burettes B and A is equal to the head loss (h); h divided by the height of the specimen after consolidation (L) is the hydraulic gradient. The difference between the two pressures should be kept as small as practicable, consistent with the requirement that the rate of flow be large enough to make accurate measurements of the quantity of flow within a reasonable period of time. Because the difference in the two pressures may be very small in comparison to the pressures at the ends of the specimen, and because the head loss must be maintained constant throughout the test, the difference between the pressures within the burettes must be measured accurately; a differential pressure gage is very useful for this purpose. The difference between the elevations of the water within the burettes should also be considered (1 in. of water = 0.036 psi of pressure).

13. Open valves D and F. Record the burette readings at any zero elapsed time. Make readings of burettes A and B and of temperature at various elapsed times (the interval between successive readings depends upon the permeability of the soil and the dimensions of the specimen). Plot arithmetically the change in readings of both burettes versus time. Continue making readings until the two curves become parallel and straight over a sufficient length of time to determine accurately the rate of flow as indicated by the slope of the curves.

2.8.5 **Calculations:** The hydraulic conductivity can be calculated using Equation (8).

2.9 Pressure-chamber permeameter method:

2.9.1 **Applicability:** This method can be used to determine hydraulic conductivity of a wide range of soils. Undisturbed and disturbed samples can be tested under falling-head conditions using this method. This method is also applicable to both coarse- and fine-grained soils, including remolded, fine-grained materials.

2.9.2 **Apparatus:** The apparatus, shown in Figure 6, consists of

1. Pressure chamber;

2. Standpipe;

3. Specimen cap and base; and

4. Coarse porous plates.

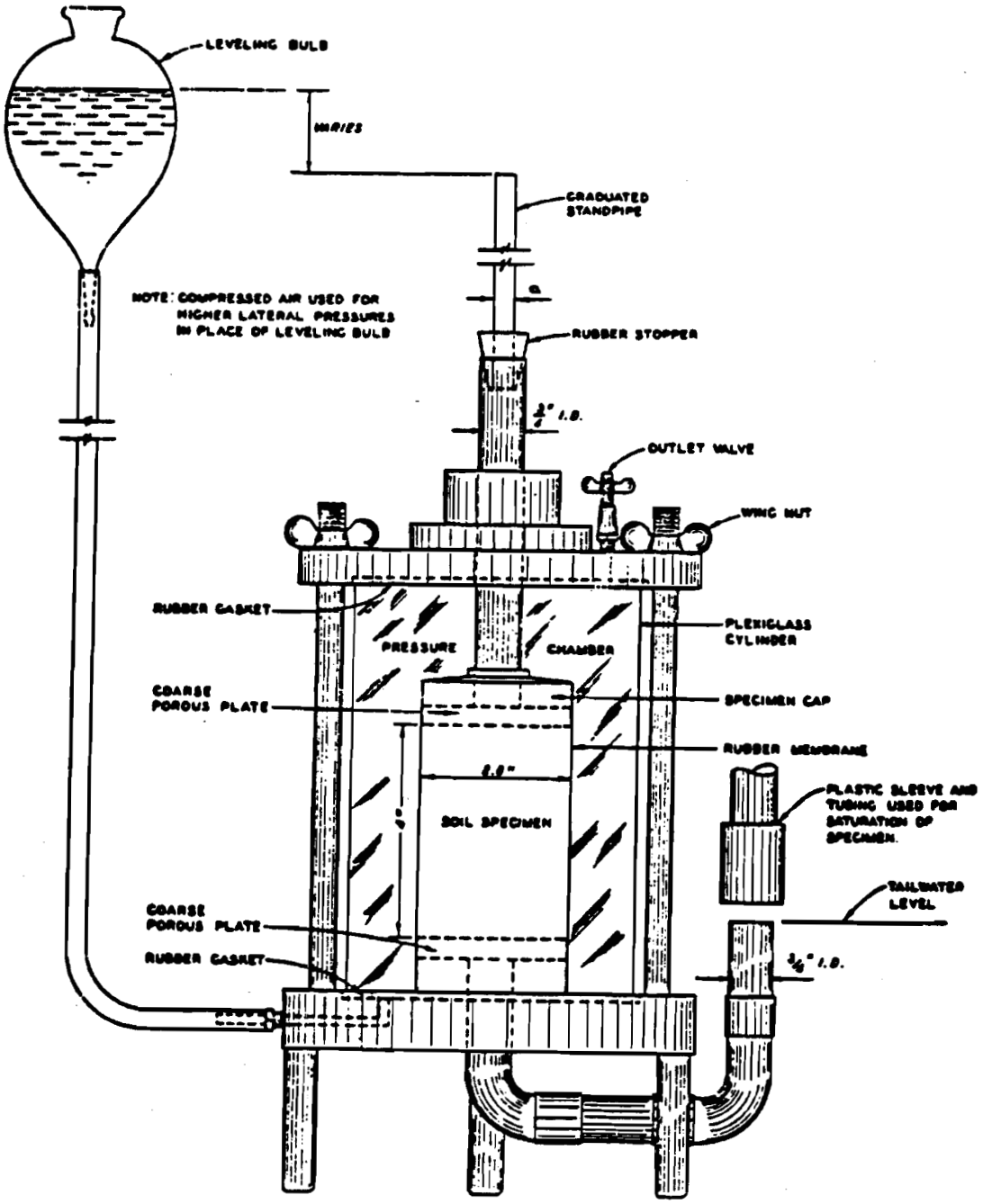

Figure 6.--Pressure chamber for hydraulic conductivity.
Source: U.S. Army Corps of Engineers, 1980.

The apparatus is capable of applying confining pressure to simulate field stress conditions.

2.9.3 **Sample preparation:** The sample preparation of disturbed and undisturbed conditions can be prepared in the chamber and enclosed within the rubber membrane, as discussed in Section 2.8.4.

2.9.4 **Test procedure:**

1. By adjusting the leveling bulb, a confining pressure is applied to the sample such that the stress conditions represent field conditions. For higher confining pressure, compressed air may be used.

2. Allow the sample to consolidate under the applied stress until the end of primary consolidation.

3. Flush water through the sample until no indication of air bubbles is observed. For higher head of water, compressed air may be used.

4. Adjust the head of water to attain a desired hydraulic gradient.

5. Measure and record the head drop in the standpipe along with elapsed time until the plot of logarithm of head versus time is linear for more than three consecutive readings.

2.9.5 **Calculations:** The hydraulic conductivity can be determined using Equation (9).

2.10 Sources of error for laboratory test for hydraulic conductivity: There are numerous potential sources of error in laboratory tests for hydraulic conductivity. Fixed-wall permeameters may have problems with sidewall leakage, causing higher values of hydraulic conductivity. Flexible-membrane permeameters may yield misleadingly low values for hydraulic conductivity when testing with a leachate that causes contraction and shrinkage cracks in the sample because the membrane shrinks with the sample. Table B summarizes some potential errors that can occur. Olsen and Daniel (1981) provide a more detailed explanation of sources of these errors and methods to minimize them. If the hydraulic conductivity does not fall within the expected range for the soil type, as given in Table C, the measurement should be repeated after checking the source of error in Table B.

TABLE B

SUMMARY OF PUBLISHED DATA ON POTENTIAL ERRORS
IN USING DATA FROM
LABORATORY PERMEABILITY TESTS ON SATURATED SOILS

Source of Error (References)	Measured K Too Low or Too High?
1. Voids formed in sample preparation (Olsen and Daniel, 1981).	High
2. Smear zone formed during trimming (Olsen and Daniel, 1981).	Low
3. Use of distilled water as a permeant (Fireman, 1944; and Wilkinson, 1969).	Low
4. Air in sample (Johnson, 1954)	Low
5. Growth of micro-organisms (Allison, 1947).	Low
6. Use of excessive hydraulic gradient (Schwartzendruber, 1968; and Mitchell and Younger, 1967).	Low or High
7. Use of temperature other than the test temperature.	Varies
8. Ignoring volume change due to stress change, with no confining pressure used.	High
9. Performing laboratory rather than in-situ tests (Olsen and Daniel, 1981).	Usually Low
10. Impedance caused by the test apparatus, including the resistance of the screen or porous stone used to support the sample.	Low

TABLE C

HYDRAULIC CONDUCTIVITIES ESTIMATED FROM GRAIN-SIZE DESCRIPTIONS
(In Feet Per Day)

Grain-Size Class or Range From Sample Description	Degree of Sorting Poor	Moderate	Well	Silt Content Slight	Moderate	High
Fine-Grained Materials						
Clay			Less than .001			
Silt, clayey			1 - 4			
Silt, slightly sandy			5			
Silt, moderately sandy			7 - 8			
Silt, very sandy			9 - 11			
Sandy silt			11			
Silty sand			13			
Sands and gravels(1)						
Very fine sand	13	20	27	23	19	13
Very fine to fine sand	27	27	-	24	20	13
Very fine to medium sand	36	41-47	-	32	27	21
Very fine to coarse sand	48	-	-	40	31	24
Very fine to very coarse sand	59	-	-	51	40	29
Very fine sand to fine gravel	76	-	-	67	52	38
Very fine sand to medium gravel	99	-	-	80	66	49
Very fine sand to coarse gravel	128	-	-	107	86	64
Fine sand	27	40	53	33	27	20
Fine to medium sand	53	67		48	39	30
Fine to coarse sand	57	65-72	-	53	43	32
Fine to very coarse sand	70	-	-	60	47	35
Fine sand to fine gravel	88	-	-	74	59	44
Fine sand to medium gravel	114	-	-	94	75	57
Fine sand to coarse gravel	145	-	-	107	87	72
Medium sand	67	80	94	64	51	40
Medium to coarse sand	74	94	-	72	57	42
Medium to very coarse sand	84	98-111	-	71	61	49
Medium sand to fine gravel	103	-	-	84	68	52
Medium sand to medium gravel	131	-	-	114	82	66
Medium sand to coarse gravel	164	-	-	134	108	82
Coarse sand	80	107	134	94	74	53
Coarse to very coarse sand	94	134	-	94	75	57
Coarse sand to fine gravel	116	136-156	-	107	88	68
Coarse sand to medium gravel	147	-	-	114	94	74
Coarse sand to coarse gravel	184	-	-	134	100	92

(1) Reduce by 10 percent if grains are subangular.
Source: Lappala (1978).

(continued)

TABLE C (Continued)

Grain-Size Class or Range From Sample Description	Degree of Sorting Poor	Moderate	Well	Silt Content Slight	Moderate	High
Sands and Gravels(1)						
Very coarse sand	107	147	187	114	94	74
Very coarse sand to fine gravel	134	214	-	120	104	87
Very coarse sand to medium gravel	1270	199-227	-	147	123	99
Very coarse sand to coarse gravel	207	-	-	160	132	104
Fine gravel	160	214	267	227	140	107
Fine to medium gravel	201	334	-	201	167	134
Fine to coarse gravel	245	289-334	-	234	189	144
Medium gravel	241	231	401	241	201	160
Medium to coarse gravel	294	468	-	294	243	191
Coarse gravel	334	468	602	334	284	234

(1) Reduce by 10 percent if grains are subangular.
Source: Lappala (1978).

2.11 Leachate conductivity using laboratory methods: Many primary and secondary leachates found at disposal sites may be nonaqueous liquids or aqueous fluids of high ionic strength. These fluids may significantly alter the intrinsic permeability of the porous medium. For example, Anderson and Brown (1981) have demonstrated increases in hydraulic conductivity of compacted clays of as much as two orders of magnitude after the passage of a few pore volumes of a wide range of organic liquids. Consequently, the effects of leachate on these materials should be evaluated by laboratory testing. The preceding laboratory methods can all be used to determine leachate conductivity by using the following guidelines.

2.11.1 **Applicability:** The determination of leachate conductivity may be required for both fine-grained and coarse-grained materials. Leachates may either increase or decrease the hydraulic conductivity. Increases are of concern for compacted clay liners, and decreases are of concern for drain materials. The applicability sections of the preceding methods should be used for selecting an appropriate test for leachate conductivity. The use of the modified compaction method (Section 2.7) for determining leachate conductivity is discussed extensively in EPA Publication SW870 (EPA 1980).

2.11.2 **Leachate used:** A supply of leachate must be obtained that is as close in chemical and physical properties to the anticipated leachate at the disposal site as possible. Methods for obtaining such leachate are beyond the scope of this report. However, recent publications by EPA (1979) and Conway and Malloy (1981) give methodologies for simulating the leaching environment to obtain such leachate. Procedures for deairing the leachate supply are given in Section 2.4. The importance of preventing bacterial growth in leachate tests will depend on the expected conditions at the disposal site. The chemical and physical properties that may result in corrosion, dissolution, or encrustation of laboratory hydraulic conductivity apparatus should be determined prior to conducting a leachate conductivity test. Properties of particular importance are the pH and the vapor pressure of the leachate. Both extremely acidic and basic leachates may corrode materials. In general, apparatus for leachate conductivity tests should be constructed of inert materials, such as acrylic plastic, nylon, or Teflon. Metal parts that might come in contact with the leachate should be avoided. Leachates with high vapor pressures may require special treatment. Closed systems for fluid supply and pressure measurement, such as those in the modified triaxial-cell methods, should be used.

2.11.3 **Safety:** Tests involving the use of leachates should be conducted under a vented hood, and persons conducting the tests should wear appropriate protective clothing and eye protection. Standard laboratory safety procedures such as those as given by Manufacturing Chemists Association (1971) should be followed.

2.11.4 **Procedures:** The determination of leachate conductivity should be conducted immediately following the determination of hydraulic

conductivity (Anderson and Brown, 1981). This procedure maintains fluid saturation of the sample, and allows a comparison of the leachate and hydraulic conductivities under the same test conditions. This procedure requires modifications of test operations as described below.

2.11.5 **Apparatus:** In addition to a supply reservoir for water as shown in Figures 3 through 6, a supply reservoir for leachate is required. Changing the inflow to the test cell from water to leachate can be accomplished by providing a three-way valve in the inflow line that is connected to each of the reservoirs.

2.11.6 **Measurements:** Measurements of fluid potential and outflow rates are the same for leachate conductivity and hydraulic conductivity. If the leachate does not alter the intrinsic permeability of the sample, the criteria for the time required to take measurements is the same for leachate conductivity tests as for hydraulic conductivity tests. However, if significant changes occur in the sample by the passage of leachate, measurements should be taken until either the shape of a curve of conductivity versus pore volume can be defined, or until the leachate conductivity exceeds the applicable design value for hydraulic conductivity.

2.11.7 **Calculations:** If the leachate conductivity approaches a constant value, Equations (8) and (9) can be used. If the conductivity changes continuously because of the action of the leachate, the following modifications should be made. For constant-head tests, the conductivity should be determined by continuing a plot of outflow volume versus time for the constant rate part of the test conducted with water. For falling-head tests, the slope of the logarithm of head versus time should be continued.

2.11.7.1 If the slope of either curve continues to change after the flow of leachate begins, the leachate is altering the intrinsic permeability of the sample. The leachate conductivity in this case is not a constant. In this case, values of the slope of the outflow curve to use in Equation (8) or (9) must be taken as the tangent to the appropriate outflow curve at the times of measurement.

3.0 FIELD METHODS

This section discusses methods available for the determination of fluid conductivity under field conditions. As most of these tests will use water as the testing fluid, either natural formation water or water added to a borehole or piezometer, the term hydraulic conductivity will be used for the remainder of this section. However, if field tests are run with leachate or other fluids, the methods are equally applicable.

The location of wells, selection of screened intervals, and the appropriate tests that are to be conducted depend upon the specific site under

investigation. The person responsible for such selections should be a qualified hydrogeologist or geotechnical engineer who is experienced in the application of established principles of contaminant hydrogeology and ground water hydraulics. The following are given as general guidelines.

1. The bottom of the screened interval should be below the lowest expected water level.

2. Wells should be screened in the lithologic units that have the highest probability of either receiving contaminants or conveying them down gradient.

3. Wells up gradient and down gradient of sites should be screened in the same lithologic unit.

Standard reference texts on ground water hydraulics and contaminant hydrogeology that should be consulted include: Bear (1972), Bouwer (1978), Freeze and Cherry (1979), Stallman (1971), and Walton (1970).

The success of field methods in determining hydraulic conductivity is often determined by the design, construction, and development of the well or borehole used for the tests. Details of these methods are beyond the scope of this report; however, important considerations are given in Sections 3.1 and 3.2. Detailed discussions of well installation, construction, and development methods are given by Bouwer, pp. 160-180 (1978), Acker (1974), and Johnson (1972).

The methods for field determination of hydraulic conductivity are restricted to well or piezometer type tests applicable below existing water tables. Determinations of travel times of leachate and dissolved solutes above the water table usually require the application of unsaturated flow theory and methods which are beyond the scope of this report.

3.1 Well-construction considerations: The purpose of using properly constructed wells for hydraulic conductivity testing is to assure that test results reflect conditions in the materials being tested, rather than conditions caused by well construction. In all cases, diagrams showing all details of the actual well or borehole constructed for the test should be made. Chapter 3 of the U.S. EPA, RCRA Ground Water Monitoring Technical Enforcement Guidance Document (TEGD) should be consulted.

3.1.1 **Well installation methods:** Well installation methods are listed below in order of preference for ground water testing and monitoring. The order was determined by the need to minimize side-wall plugging by drilling fluids and to maximize the accurate detection of saturated zones. This order should be used as a guide, combined with the judgment of an experienced hydrogeologist in selecting a drilling method. The combined uses of wells for hydraulic conductivity testing, water-level monitoring, and water-quality sampling for organic contaminants were considered in arriving at the ranking.

1. Hollow-stem auger;

2. Cable tool;

3. Air rotary;

4. Rotary drilling with non-organic drilling fluids;

5. Air foam rotary; and

6. Rotary with organic-based drilling fluids.

Although the hollow stem-auger method is usually preferred for the installation of most shallow wells (less than 100 feet), care must be taken if the tested zone is very fine. Smearing of the borehole walls by drilling action can effectively seal off the borehole from the adjacent formation. Scarification can be used to remedy this.

3.1.2 **Wells requiring well screens:** Well screens placed opposite the interval to be tested should be constructed of materials that are compatible with the fluids to be encountered. Generally an inert plastic such as PVC is preferred for ground water contamination studies. The screen slot size should be determined to minimize the inflow of fine-grained material to the well during development and testing. Bouwer (1978) and Johnson (1972) give a summary of guidelines for sizing well screens.

3.1.2.1 The annulus between the well screen and the borehole should be filled with an artificial gravel pack or sand filter. Guidelines for sizing these materials are given by Johnson (1972). For very coarse materials, it may be acceptable to allow the materials from the tested zone to collapse around the screen forming a natural gravel pack.

3.1.2.2 The screened interval should be isolated from overlying and underlying zones by materials of low hydraulic conductivity. Generally, a short bentonite plug is placed on top of the material surrounding the screen, and cement grout is placed in the borehole to the next higher screened interval (in the case of multiple screen wells), or to the land surface for single screen wells.

3.1.2.3 Although considerations for sampling may dictate minimum casing and screen diameters, the recommended guideline is that wells to be tested by pumping, bailing, or injection in coarse-grained materials should be at least 4-inches inside diameter. Wells to be used for testing materials of low hydraulic conductivity by sudden removal or injection of a known volume of fluid should be constructed with as small a casing diameter as possible to maximize measurement resolution of fluid level changes. Casing sizes of 1.25 to 1.50 inches usually allow this resolution while enabling the efficient sudden withdrawal of water for these tests.

3.1.3 Wells not requiring well screens: If the zone to be tested is sufficiently indurated that a well screen and casing are not required to prevent caving in, it is preferable to use a borehole open to the zone to be tested. These materials generally are those having low to extremely low hydraulic conductivities. Consolidated rocks having high conductivity because of the presence of fractures and solution openings may also be completed without the use of a screen and gravel pack. Uncased wells may penetrate several zones for which hydraulic conductivity tests are to be run. In these cases, the zones of interest can be isolated by the use of inflatable packers.

3.2 Well development: For wells that are constructed with well screens and gravel packs, and for all wells in which drilling fluids have been used that may have penetrated the materials to be tested, adequate development of the well is required to remove these fluids and to remove the fine-grained materials from the zone around the well screen. Development is carried out by methods such as intermittent pumping, jetting with water, surging, and bailing. Adequate development is required to assure maximum communication between fluids in the borehole and the zone to be tested. Results from tests run in wells that are inadequately developed will include an error caused by loss of fluid potential across the undeveloped zone, and computed hydraulic conductivities will be lower than the actual value. Bouwer (1978) and Johnson (1975) give further details on well development including methods to determine when adequate development has occurred. The U.S. EPA TEGD should also be consulted.

3.3 Data interpretation and test selection considerations: Hydraulic conductivity may be determined in wells that are either cased or uncased as described in Section 3.1. The tests all involve disturbing the existing fluid potential in the tested zone by withdrawal from or injection of fluid into a well, either as a slug over an extremely short period of time, or by continuous withdrawal or injection of fluid. The hydraulic conductivity is determined by measuring the response of the water level or pressure in the well as a function of time since the start of the test. Many excellent references are available that give the derivation and use of the methods that are outlined below, including Bouwer (1978), Walton (1969), and Lohman (1972).

3.3.1 The selection of a particular test method and data analysis technique requires the consideration of the purposes of the test, and the geologic framework in which the test is to be run. Knowledge of the stratigraphic relationships of the zone to be tested and both overlying and underlying materials should always be used to select appropriate test design and data interpretation methods.

3.3.2 The equations given for all computational methods given here and in the above references are based on idealized models comprising layers of materials of different hydraulic conductivities. The water-level response caused by disturbing the system by the addition or removal of water can be similar for quite different systems. For example, the response of a water-table aquifer and a leaky, confined aquifer to

pumping can be very similar. Consequently, it is not considered acceptable practice to obtain data from a hydraulic conductivity test and interpret the type of hydraulic system present without supporting geologic evidence.

3.3.3 The primary use of hydraulic conductivity data from tests described subsequently will usually be to aid in siting monitoring wells for facility design as well as for compliance with Subpart F of Part 264. As such, the methods are abbreviated to provide guidance in determining hydraulic conductivity only. Additional analyses that may be possible with some methods to define the storage properties of the aquifer are not included. The U.S. EPA TEGD has an expanded discussion on the relationship between K tests and siting design (Chapter 1) and should be consulted.

3.3.4 The well test methods are discussed under the following two categories: 1) methods applicable to coarse-grained materials and tight to extremely tight materials under confined conditions; and 2) methods applicable to unconfined materials of moderate permeability. The single well tests integrate the effects of heterogeneity and anisotropy. The effects of boundaries such as streams or less permeable materials usually are not detectable with these methods because of the small portion of the geologic unit that is tested.

3.4 Single well tests: The tests for determining hydraulic conductivity with a single well are discussed below based on methods for confined and unconfined conditions. The methods are usually called slug tests because the test involves removing a slug of water instantaneously from a well and measuring the recovery of water in the well. The method was first developed by Hvorslev (1951), whose analysis did not consider the effect of fluid stored in the well. Cooper and others (1967) developed a method that considers well bore storage. However, their method only applied to wells that are open to the entire zone to be tested and that tap confined aquifers. Because of the rapid water-level response in coarse materials, the tests are generally limited to zones with a transmissivity of less than about 70 cm^2/sec (Lohman, 1972). The method has been extended to allow testing of extremely tight formations by Bredehoeft and Papadopulos (1980). Bouwer and Rice (1976) developed a method for analyzing slug tests for unconfined aquifers.

3.4.1 Method for moderately permeable formations under confined conditions:

3.4.1.1 Applicability: This method is applicable for testing zones to which the entire zone is open to the well screen or open borehole. The method usually is used in materials of moderate hydraulic conductivity which allow measurement of water-level response over a period of a hour to a few days. More permeable zones can be tested with rapid response water-level recording equipment. The method assumes that the tested zone is uniform in all radial directions from the test well. Figure 7 illustrates the test geometry for this method.

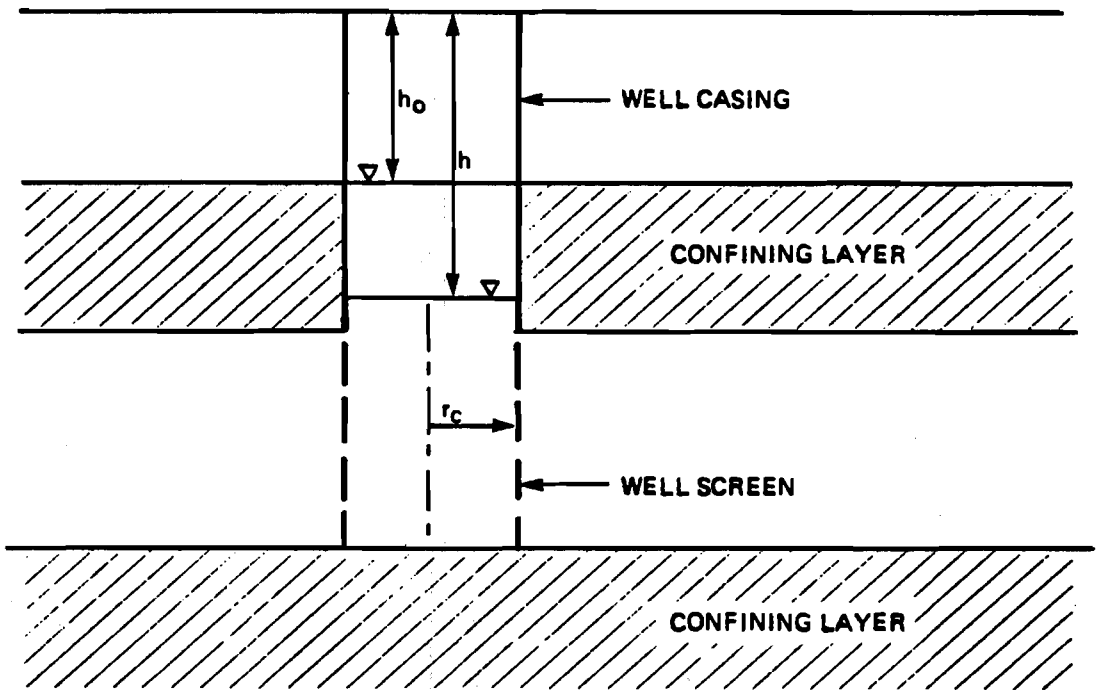

Figure 7.--Geometry and variable definition for slug tests in confined aquifers.

3.4.1.2 Procedures: The slug test is run by utilizing some method of removing or adding a known volume of water from the well bore in a very short time period and measuring the recovery of the water level in the well. The procedures are the same for both unconfined and confined aquifers. Water is most effectively removed by using a bailer that has been allowed to fill and stand in the well for a sufficiently long period of time so that any water-level disturbance caused by the insertion of the bailer will have reached equilibrium. In permeable materials, this recovery time may be as little as a few minutes. An alternate method of effecting a sudden change in water level is the withdrawal of a weighted float. The volume of water displaced can be computed using the known submersed volume of the float and Archimedes' principle (Lohman, 1972).

Water-level changes are recorded using either a pressure transducer and a strip chart recorder, a weighted steel tape, or an electric water-level probe. For testing permeable materials that approach or exceed 70 cm^2/sec, a rapid-response transducer/recorder system is usually used because essentially full recovery may occur in a few minutes. Because the rate of water-level response decays with time, water-level or pressure changes should be taken at increments that are approximately equally spaced in the logarithm of the time since fluid withdrawal. The test should be continued until the water level in the well has recovered to at least 85 percent of the initial pre-test value.

3.4.1.3 Calculations: Calculations for determining hydraulic conductivity for moderately permeable formations under confined conditions can be made using the following procedure:

1. Determine the transmissivity of the tested zone by plotting the ratio h/h_0 on an arithmetic scale against time since removal of water (t) on a logarithmic scale. The observed fluid potential in the well during the test as measured by water level or pressure is h, and the fluid potential before the instant of fluid withdrawal is h_0. The data plot is superimposed on type curves, such as those given by Lohman (1972), Plate 2, or plotted from Appendix A, with the h/h_0 and time axes coincident. The data plot is moved horizontally until the data fits one of the type curves. A value of time on the data plot corresponding to a dimensionless time (β) on the type curve plot is chosen, and the transmissivity is computed from the following:

$$T = \frac{\beta r_c^2}{t} \qquad (10)$$

where:

r_c is the radius of the casing (Lohman, p. 29 (1972)).

The type curves plotted using data in Appendix A are not to be confused with those commonly referred to as "Theis Curves" which are used for pumping tests in confined aquifers (Lohman, 1972). The type curve method is a general technique of determining aquifer parameters when the solution to the descriptive flow equation involves more than one unknown parameter. Although both the storage coefficient and transmissivity of the tested interval can be determined with the type curve method for slug tests, determination of storage coefficients is beyond the scope of this report. See Section 3.4.1.4 for further discussion of the storage coefficient.

If the data in Appendix A are used, a type curve for each value of α is prepared by plotting $F(\alpha,\beta)$ on the arithmetic scale and dimensionless time (β) on the logarithmic scale of semi-log paper.

2. Determine the hydraulic conductivity by dividing the transmissivity (T) calculated above by the thickness of the tested zone.

3.4.1.4 Sources of error: The errors that can arise in conducting slug tests can be of three types: those resulting from the well or borehole construction; measurement errors; and data analysis error.

Well construction and development errors: This method assumes that the entire thickness of the zone of interest is open to the well screen or boreholes and that flow is principally radial. If this is not the case, the computed hydraulic conductivity may be too high. If the well is not properly developed, the computed conductivity will be too low.

Measurement errors: Determining or recording the fluid level in the borehole and the time of measurement incorrectly can cause measurement errors. Water levels should be measured to an accuracy of at least 1 percent of the initial water-level change. For moderately permeable materials, time should be measured with an accuracy of fractions of minutes, and, for more permeable materials, the time should be measured in terms of seconds or fractions of seconds. The latter may require the use of a rapid-response pressure transducer and recorder system.

Data analysis errors: The type curve procedure requires matching the data to one of a family of type curves, described by the parameter , which is a measure of the storage in the well bore and aquifer. Papadopulos and others (1973) show that an error of two orders of magnitude in the selection of would result in an error of less than 30 percent in the value of transmissivity determined. Assuming no error in determining the thickness of the zone tested, this is equivalent to a 30 percent error in the hydraulic conductivity.

3.4.2 **Methods for extremely tight formations under confined conditions:**

3.4.2.1 Applicability: This test is applicable to materials that have low to extremely low permeability such as silts, clays, shales, and indurated lithologic units. The test has been used to determine hydraulic conductivities of shales of as low as 10^{-10} cm/sec.

3.4.2.2 Procedures: The test described by Bredehoeft and Papadopulos (1980) and modified by Neuzil (1982) is conducted by suddenly pressurizing a packed-off zone in a portion of a borehole or well. The test is conducted using a system such as shown in Figure 8. The system is filled with water to a level assumed to be equal to the prevailing water level. (This step is required if sufficiently large times have not elapsed since the drilling of the well to allow full recovery of water levels.) A pressure transducer and recorder are used to monitor pressure changes in the system for a period prior to the test to obtain pressure trends preceding the test. The system is pressurized by addition of a known volume of water with a high-pressure pump. The valve is shut and the pressure decay is monitored. Neuzil's modification uses two packers with a pressure transducer below the bottom packer to measure the pressure change in the cavity and one between the two packers to monitor any pressure change caused by leakage around the bottom packer.

3.4.2.3 Calculations: The modified slug test as developed by Bredehoeft and Papadopulos (1980) considered compressive storage of water in the borehole. These authors considered that the volume of the packed-off borehole did not change during the test and that all compressive storage resulted in compression of water under the pressure pulse. Neuzil (1980) demonstrated that under some test conditions this is not a valid assumption. The computational from either Lohman, Plate 2 (1972) or plotted from data given in Appendix A as described in Section 3.4.1.3. The values of time (t) and dimensionless time (β) are determined in the same manner as for the conventional tests. If compression of water only is considered, transmissivity is computed by replacing r_c by the quantity $(V_W C_W \rho g/\pi)$ in Equation 10:

$$T = \frac{\beta(V_W\ C_W\ \rho_g/\pi)^2}{t} \qquad (10)$$

where:

V_W is the volume of water in the packed-off cavity, L^3;

C_W is the compressibility of water, LT^2M^{-1};

ρ is the density of water, ML^{-3}; and

g is the acceleration of gravity, LT^{-2}.

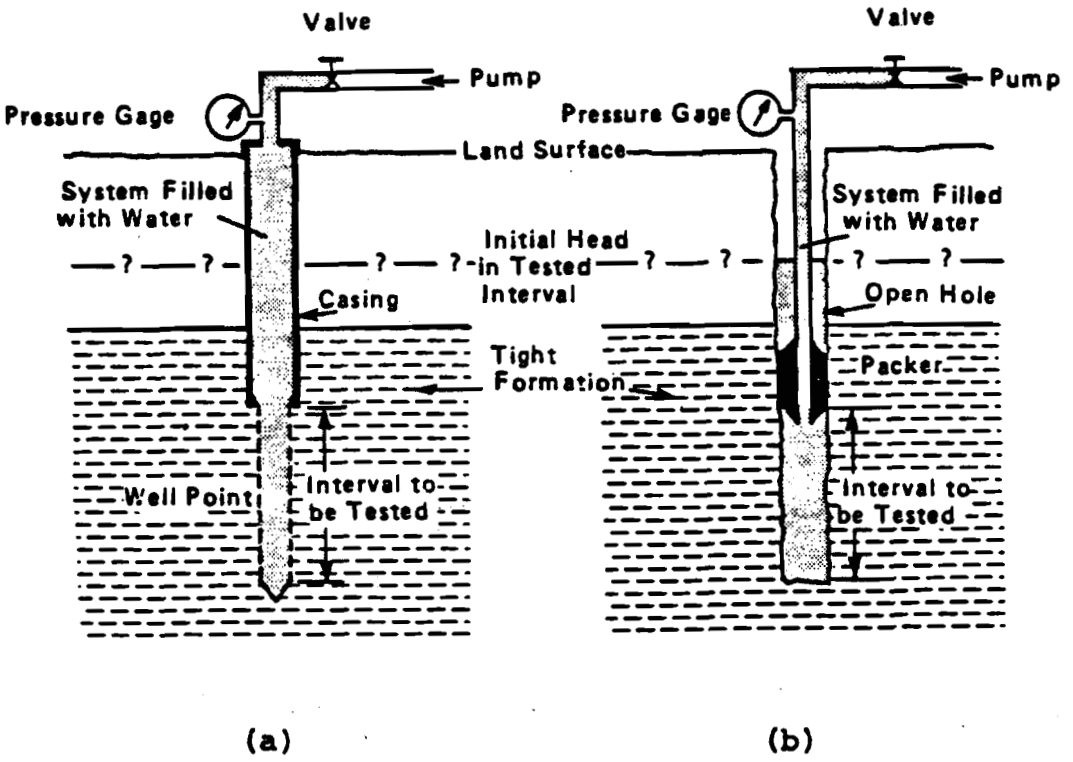

Figure 8.--Schematic diagram for pressurized slug test method in unconsolidated (a) and consolidated (b) materials. Source: Papadopulos and Bredehoeft, 1980.

If the compressive storage is altered by changing the volume of the packed-off cavity (V), then the combined compressibility of the water and the expansion of the cavity (C_o) is used. C_o is computed by measuring the volume of water injected during pressurization (ΔV) and the pressure change (ΔP) for the pressurization:

$$C_o = \frac{\Delta V}{V \Delta P} \tag{11}$$

(Neuzil, p. 440 (1982)). Use of C_o requires an accurate method of metering the volume of water injected and the volume of the cavity.

3.4.2.4 Sources of error: The types of errors in this method are the same as those for the conventional slug test. Errors may also arise by inaccurate determination of the cavity volume and volume of water injected. An additional assumption that is required for this method is that the hydraulic properties of the interval tested remain constant throughout the test. This assumption can best be satisfied by limiting the initial pressure change to a value only sufficiently large enough to be measured (Bredehoeft and Papadopulos, 1980).

3.4.3 Methods for moderately permeable materials under unconfined conditions:

3.4.3.1 Applicability: This method is applicable to wells that fully or partially penetrate the interval of interest (Figure 9). The hydraulic conductivity determined will be principally the value in the horizontal direction (Bouwer and Rice, 1976).

3.4.3.2 Procedures: A general method for testing cased wells that partly or fully penetrate aquifers that have a water table as the upper boundary of the zone to be tested was developed by Bouwer and Rice (1976). The geometry and dimensions that are required to be known for the method are shown in Figure 9. The test is accomplished by effecting a sudden change in fluid potential in the well by withdrawal of either a bailer or submerged float as discussed in Section 3.4.1.2. Water-level changes can be monitored with either a pressure transducer and recorder, a wetted steel tape, or an electric water-level sounder. For highly permeable formations, a rapid-response transducer and recorder system is required. The resolution of the transducer should be about 0.01 m.

3.4.3.3 Calculations: The hydraulic conductivity is calculated using the following equation from Bouwer and Rice (1976), in the notation of this report:

$$K = \frac{r_c^2 \ln \bar{R}/r_w}{2 L_e t} \ln \frac{Y_o}{Y} \tag{12}$$

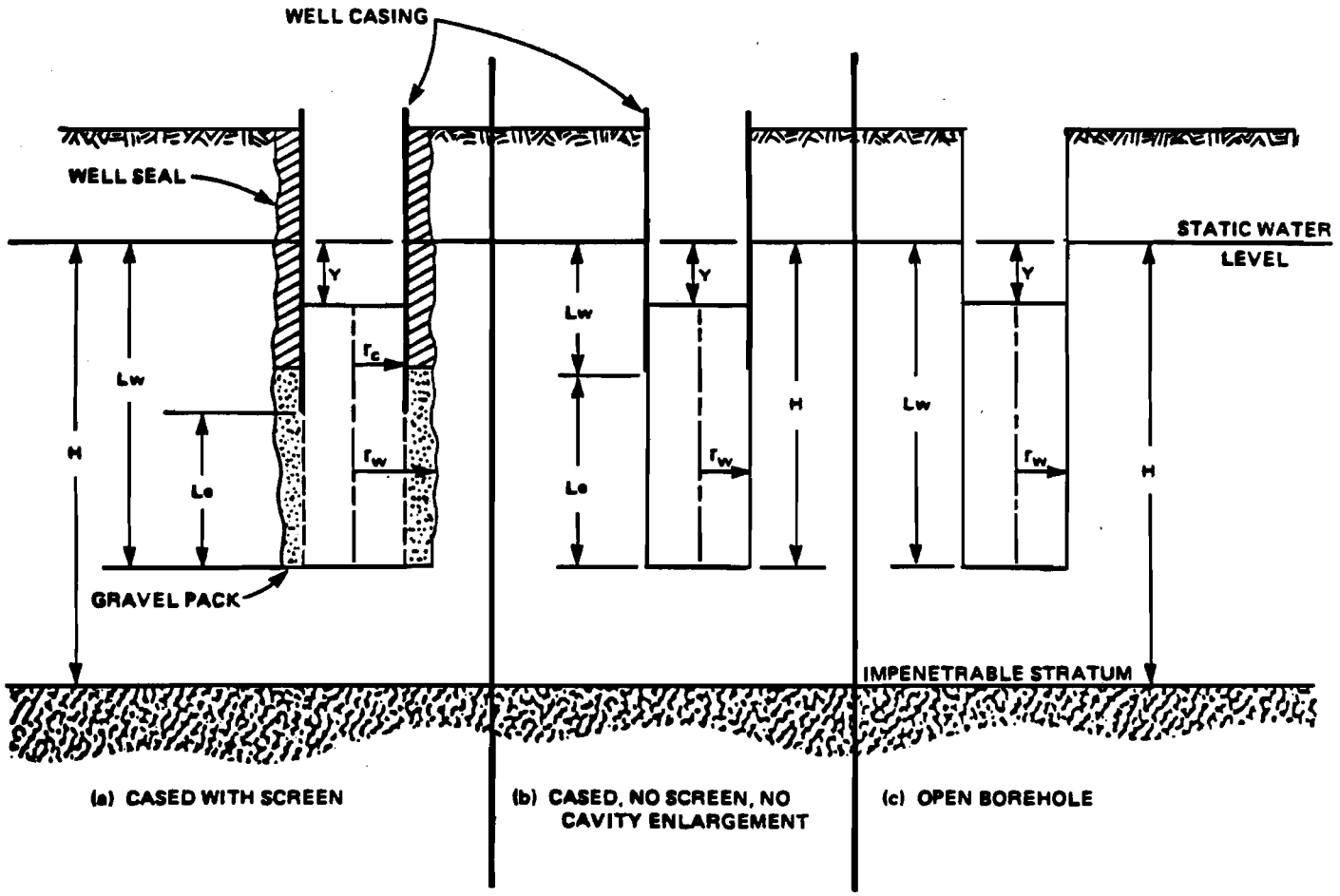

Figure 9.--Variable definitions for slug tests in unconfined materials. Cased wells are open at the bottom.

where r_c, r_w, L_e, t, Y, and K have been previously defined or are defined in Figure 8a. Y_o is the value of Y immediately after withdrawal of the slug of water. The term $\bar{R}$ is an effective radius for wells that do not fully penetrate the aquifer that is computed using the following equation given by Bouwer and Rice (1976):

$$\ln \frac{\bar{R}}{r_w} = \left\{ \frac{1.1}{\ln (L_w/r_w)} + \frac{A + B \ln[(H_o-L_w)/r_w]}{(L_e/r_w)} \right\}^{-1} \tag{13}$$

If the quantity $(H_o-L_w)/r_w)$ is larger than 6, a value of 6 should be used.

For wells that completely penetrate the aquifer, the following equation is used:

$$\ln \frac{\bar{R}}{r_w} = \left\{ \frac{1.1}{\ln (L_w/r_w)} + \frac{C}{L_e/r_w} \right\}^{-1} \tag{14}$$

(Bouwer, 1976). The values of the constants A, B, and C are given by Figure 10 (Bouwer and Rice, 1976).

For both cases, straight-line portions of plots of the logarithm of Y or Y_o/Y against time should be used to determine the slope, $(\ln Y_o/Y)/t$.

Additional methods for tests under unconfined conditions are summarized by Bower (1976) on pages 117-122. These methods are modifications of the cased-well method described above that apply either to an uncased borehole or to a well or piezometer in which the diameter of the casing and the borehole are the same (Figures 9b and 9c.)

3.4.3.4 Sources of error: The method assumes that flow of water from above is negligible. If this assumption cannot be met, the conductivities may be in error. Sufficient flow from the unsaturated zone by drainage would result in a high conductivity value. Errors caused by measuring water levels and recording time are similar to those discussed in Sections 3.4.1.4 and 3.4.2.4.

3.5 Multiple well tests: Hydraulic conductivity can also be determined by conventional pumping tests in which water is continuously withdrawn or injected using one well, and the water-level response is measured over time in or near more observation wells. The observation wells must be screened in the same strata as the injection or pumping well. These methods generally test larger portions of aquifers than the single well tests discussed in Section 3.4. For some circumstances these tests may be appropriate in obtaining data to use in satisfying requirements of Part 264 Subpart F. However, the large possibility for non-uniqueness in interpretation, problems involved in pumping contaminated fluids, and the expense of conducting such tests generally

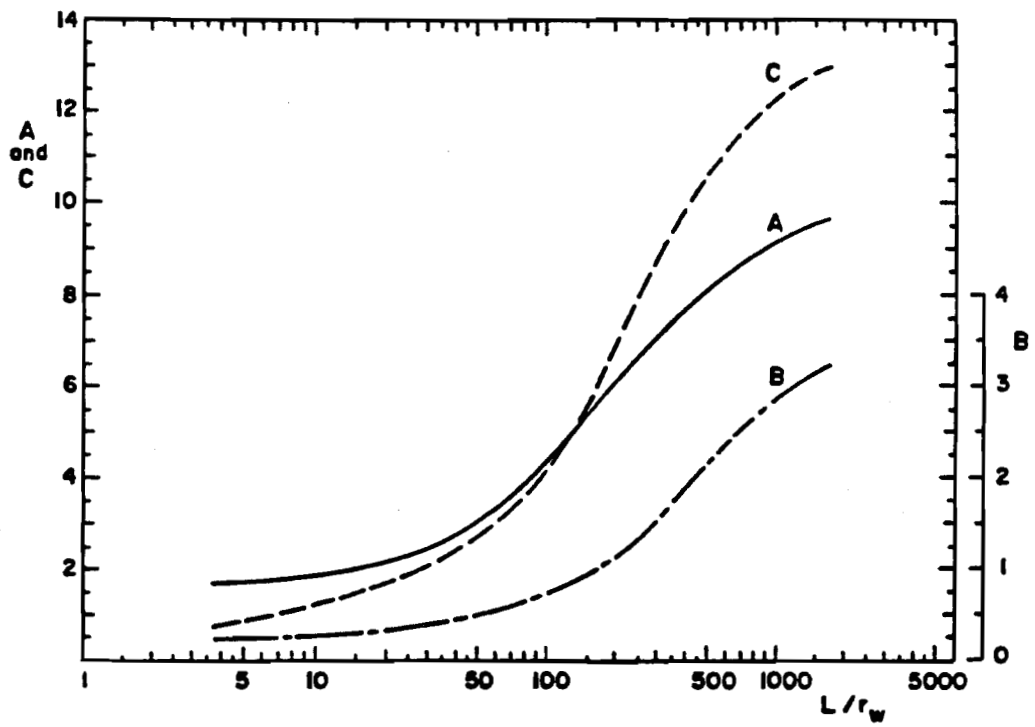

Figure 10. --Curves defining coefficients A, B, and C in equations 13 and 14 as a function of the ratio L/rw. Source: Bower and Rice, 1976.

preclude their use in problems of contaminant hydrogeology. The following references give excellent discussions of the design and interpretation of these tests: Lohman (1972), Stallman (1971), and Walton (1970).

3.6 Estimates of hydraulic conductivity for coarse-grained materials: The characterization of ground water flow systems to satisfy the intent of Part 264 Subpart F is preferably done with flow nets based on borehole measurements rather than relying on interpolation from grain-size analyses.

An empirical approach that has been used by the U.S. Geological Survey (Lappala, 1978) in several studies relates conductivity determined by aquifer testing to grain-size, degree of sorting and silt content. Table C provides the estimates of hydraulic conductivity.

Although estimates of K from analysis of grain-size and degree of sorting do provide a rough check on test values of K, repeated slug tests provide a better check on the accuracy of results.

3.7 Consolidation tests: As originally defined by Terzagi (Terzaghi and Peck, 1967) the coefficient of consolidation (C_v) of a saturated, compressible, porous medium is related to the hydraulic conductivity by:

$$C_v = \frac{K}{\rho g \alpha} \tag{15}$$

where:

K is the hydraulic conductivity, LT^{-};

ρ is the fluid density, ML^{-3};

g is the gravitational constant, LT^{-2}; and

α is the soil's compressibility, $LM^{-1}T^{2}$.

The compressibility can be determined in the laboratory with several types of consolidometers, and is a function of the applied stress and the previous loading history. Lambe (1951) describes the testing procedure.

3.7.1 The transfer value of results from this testing procedure is influenced by the extent to which the laboratory loading simulates field conditions and by the consolidation rate. The laboratory loadings will probably be less than the stress that remolded clay liner will experience; therefore, the use of an already remolded sample in the consolidometer will probably produce no measurable results. This suggests that the test is of little utility in determining the hydraulic conductivity of remolded or compacted, fine-grained soils. Second, the consolidation rate determines the length of the testing period. For granular soils, this rate is fairly rapid. For fine-grained soils, the rate may be sufficiently slow that the previously described methods,

which give faster results, will be preferable. Cohesive soils (clays) must be trimmed from undisturbed samples to fit the mold, while cohesionless sands can be tested using disturbed, repacked samples (Freeze and Cherry, 1979).

3.7.2 In general, EPA believes that consolidation tests can provide useful information for some situations, but prefers the previously described methods because they are direct measurements of hydraulic conductivity. Hydraulic conductivity values determined using consolidation tests are not to be used in permit applications.

3.8 Fractured media: Determining the hydraulic properties of fractured media is always a difficult process. Unlike the case with porous media, Darcy's Law is not strictly applicable to flow through fractures, although it often can be applied empirically to large bodies of fractured rock that incorporate many fractures. Describing local flow conditions in fractured rock often poses considerable difficulty. Sowers (1981) discusses determinations of hydraulic conductivity of rock. This reference should be consulted for guidance in analyzing flow through fractured media.

3.8.1 Fine-grained sediments, such as glacial tills, are commonly fractured in both saturated and unsaturated settings. These fractures may be sufficiently interconnected to have a significant influence on ground water flow, or they may be of very limited connection and be of little practical significance.

3.8.2 Frequently, a laboratory test of a small sample of clay will determine hydraulic conductivity to be on the order of 10^{-8} cm/sec. A piezometer test of the same geologic unit over an interval containing fractures may determine a hydraulic conductivity on the order of perhaps 10-5 or 10-6 cm/sec. To assess the extent of fracture interconnection, and hence the overall hydraulic conductivity of the unit, several procedures can be used. Closely spaced piezometers can be installed; one can be used as an observation well while water is added to or withdrawn from the other. Alternately, a tracer might be added to one piezometer, and the second could be monitored. These and other techniques are discussed by Sowers (1981).

3.8.3 For situations that may involve flow through fractured media, it is important to note in permit applications that an apparent hydraulic conductivity determined by tests on wells that intersect a small number of fractures may be several orders others of magnitude lower or higher than the value required to describe flow through parts of the ground water system that involve different fractures and different stress conditions from those used during the test.

4.0 CONCLUSION

4.1 By following laboratory and field methods discussed or referenced in this report, the user should be able to determine the fluid conductivity of materials used for liners, caps, and drains at waste-disposal facilities, as

well as materials composing the local ground water flow system. If fluid-conductivity tests are conducted and interpreted properly, the results obtained should provide the level of information necessary to satisfy applicable requirements under Part 264.

5.0 REFERENCES

1. Acker, W. L., III, Basic Procedures for Soil Sampling and Core Drilling, Acker Drill Co., 246 p., 1974.

2. Allison, L.E., Effect of Microorganisms on Permeability of Soil under Prolonged Submergence, Soil Science, 63, pp. 439-450 (1947).

3. American Society for Testing and Materials (ASTM), Annual Book of ASTM Standards, Part 19, 1978.

4. Anderson, D., and K. W. Brown, Organic Leachate Effects on the Permeability of Clay Liners, in Proceedings of Solid Waste Symposium, U.S. EPA, p. 119-130, 1981.

5. Bear, J., Dynamics of Fluids in Porous Media, American Elsevier, 764 p., 1972.

6. Bouwer, H., and R. C. Rice, A Slug Test for Determining Hydraulic Conductivity of Unconfined Aquifers with Completely or Partially Penetrating Wells, Water Resources Research, 12, p. 423-428 (1976).

7. Bredehoeft, J. D., and S. S. Papadopulos, A Method for Determining the Hydraulic Properties of Tight Formations, Water Resources Research, 16, p.233-238 (1980).

8. Conway, R. A., and B. C. Malloy, eds., Hazardous Solid Waste Testing: First conference, ASTM Special Technical Publication 760, 1981.

9. Cooper, H. H., J. D. Bredehoeft, and I. S. Papadopulos, Response of a Finite Diameter Well to an Instantaneous Charge of Water, Water Resources Research, 3, p. 263-269 (1967).

10. Dakessian, S., et al., Lining of Waste Impoundment and Disposal Facilities, Municipal Environment Research Laboratory, U.S. EPA, Cincinnati, OH, EPA-530/SW-870c, pp. 264-269, 1980.

11. Fireman, M., Permeability Measurements on Disturbed Soil Samples, Soil Science, 58, pp. 337-355 (1944).

12. Freeze, R. A., and J. A. Cherry, Ground Water, Prentice Hall, 604 p., 1979.

13. Gordon, B.B., and M. Forrest, Permeability of Soil Using Contaminated Permeant, in Permeability and Ground Water Contaminant Transport, ed. T. F. Zimmie and C. O. Riggs, ASTM Special Technical Publication 746, p. 101-120, 1981.

14. Hillel, D., Soil and Water, Academic Press, 288 p., 1971.

15. Hvorslev, M. J., Time Lag and Soil Permeability in Ground Water Observations, U.S. Army Corps of Engineers Waterways Experiment Station Bull. 36, 1951.

16. Johnson, A. I., Symposium on Soil Permeability, ASTM STP 163, American Society of Testing and Materials, Philadelphia, pp. 98-114, 1954.

17. Johnson, E. E., Inc., Ground Water and Wells, Johnson Division, UOP, 440 p., 1975.

18. Lappala, E. G., Quantitative Hydrogeology of the Upper Republican Natural Resources District, Southwest Nebraska, U.S. Geological Survey Water Resources Investigations 78-38.

19. Lambe, T. W., Soil Testing for Engineers, John Wiley, N.Y., 1951.

20. Lohman, S. W., Ground Water Hydraulics, U.S. Geological Survey Professional Paper 708, 70 p., 1972.

21. Lohman, S. W., et al., Definitions of Selected Ground Water Terms - Revisions and Conceptual Refinements, U.S. Geological Survey Water Supply Paper 1988, 1972.

22. Manufacturing Chemists Association, Guide for Safety in the Chemical Laboratory, Van Nostrand, Reinhold Co, N.Y., 1971.

23. Mitchell, A.K., and J. S. Younger, Permeability and Capillarity of Soils, ASTM STP 417, American Society for Testing and Materials, Philadelphia, pp.106-139, 1967.

24. Neuzil, C. E., On Conducting the Modified 'Slug' Test in Tight Formations, Water Resources Research, 18(2), pp. 439-441 (1982).

25. Olsen, R. E., and D. E. Daniel, Measurement of the Hydraulic Conductivity of Fine-Grained Soils, in Permeability and Ground Water Transport, ed. T.F. Zimmie and C. O. Riggs, ASTM Special Publication 746, p. 18-64, 1981.

26. Papadopulos, S. S., J. D. Bredehoeft, and H. H. Cooper, Jr., On the Analysis of 'Slug Test' Data, Water Resources Research, 9, p. 1087-1089 (1973).

27. Schwartzendruber, D., The Applicability of Darcy's Law, Soil Science Society of America Proceedings, 32(1), pp. 11-18 (1968).

28. Sowers, G. F., Rock Permeability or Hydraulic Conductivity -- An Overview, in Permeability and Ground Water Transport, ed. T. F. Zimmie and Co. O. Riggs, ASTM Special Technical Publication 746, 1981.

29. Stallman, R. W., Aquifer-Test Design, Observation and Data Analysis, TWRI, Chap. B1, Book 3, U.S. Geological Survey, U.S. Govt. Printing Office, Washington, D.C., 1971.

30. Terzaghi, K., and R. B. Peck, Soil Mechanics in Engineering Practice, 2nd ed., John Wiley & Sons, N.Y., 729 p., 1967.

31. Walton, W. C., Ground Water Resource Evaluation, McGraw Hill, 664 p., 1970.

32. Wilkinson, W. B., In Situ Investigation in Soils and Rocks, British and Geotechnical Society, Institution of Civil Engineers, London, pp. 311-313, 1969.

33. U.S. Army Corps of Engineers, Laboratory Soil Testing, Waterways Experiment Station, Vicksburg, Mississippi, Publication EM 1110-2-2-1906, 1970.

34. U.S. Environmental Protection Agency, Hazardous Waste Guidelines and Regulations (proposed), Federal Register, Part IV, Dec. 18, 1978.

35. U.S. Environmental Protection Agency, RCRA Ground Water Monitoring Technical Enforcement Guidance Document, Draft Final.

METHOD 9100 (Part)

HYDRAULIC CONDUCTIVITY OF SOIL SAMPLES:

CONSTANT-HEAD TEST WITH CONVENTIONAL PERMEAMETER

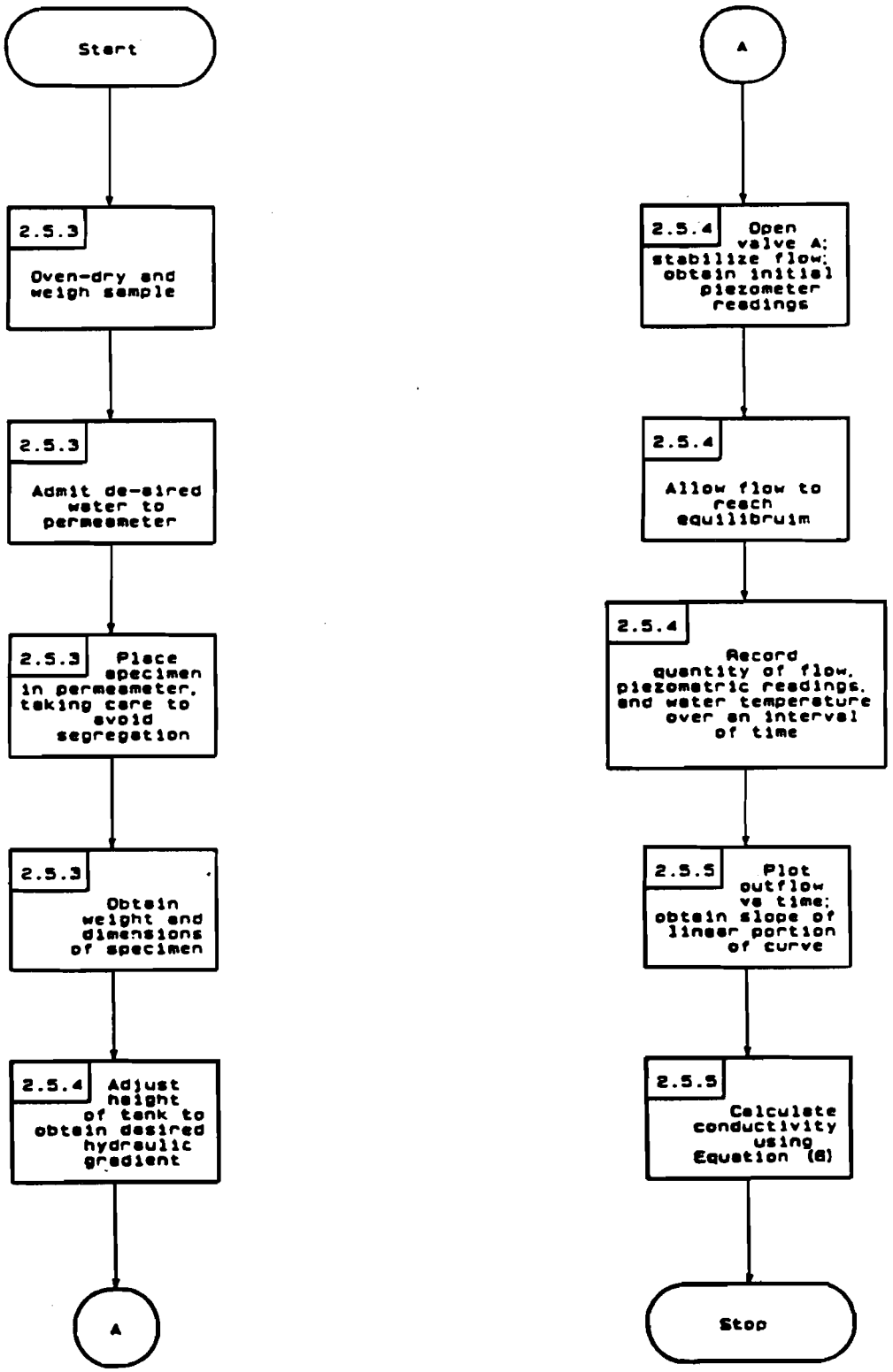

Revision 0
Date September 1986

METHOD 9100

HYDRAULIC CONDUCTIVITY OF SOIL SAMPLES:

FALLING-HEAD TEST WITH CONVENTIONAL PERMEAMETER

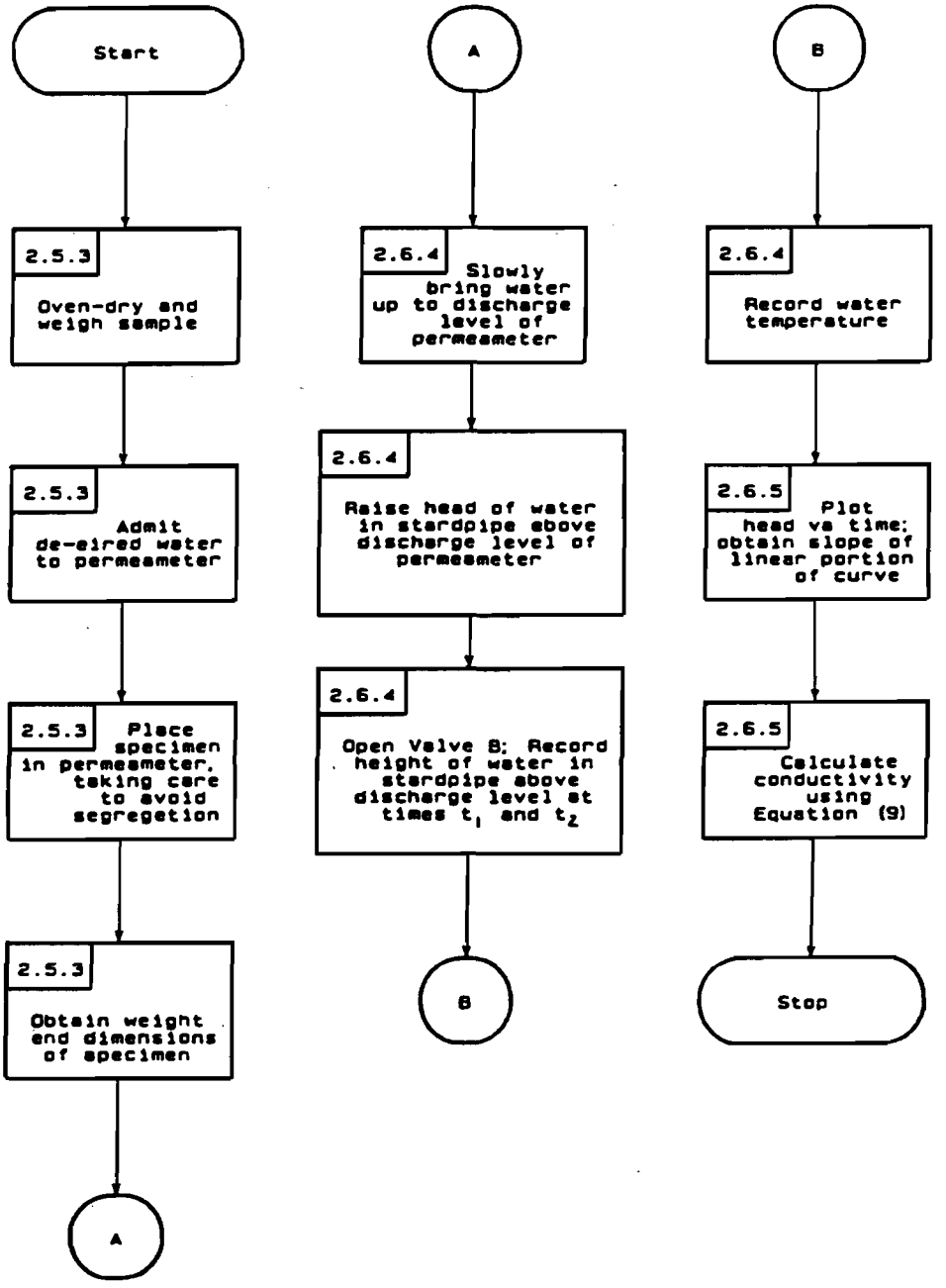

Revision 0
Date September 1986

METHOD 9100

HYDRAULIC CONDUCTIVITY OF SOIL SAMPLES:

MODIFIED COMPACTION PARAMETER METHOD

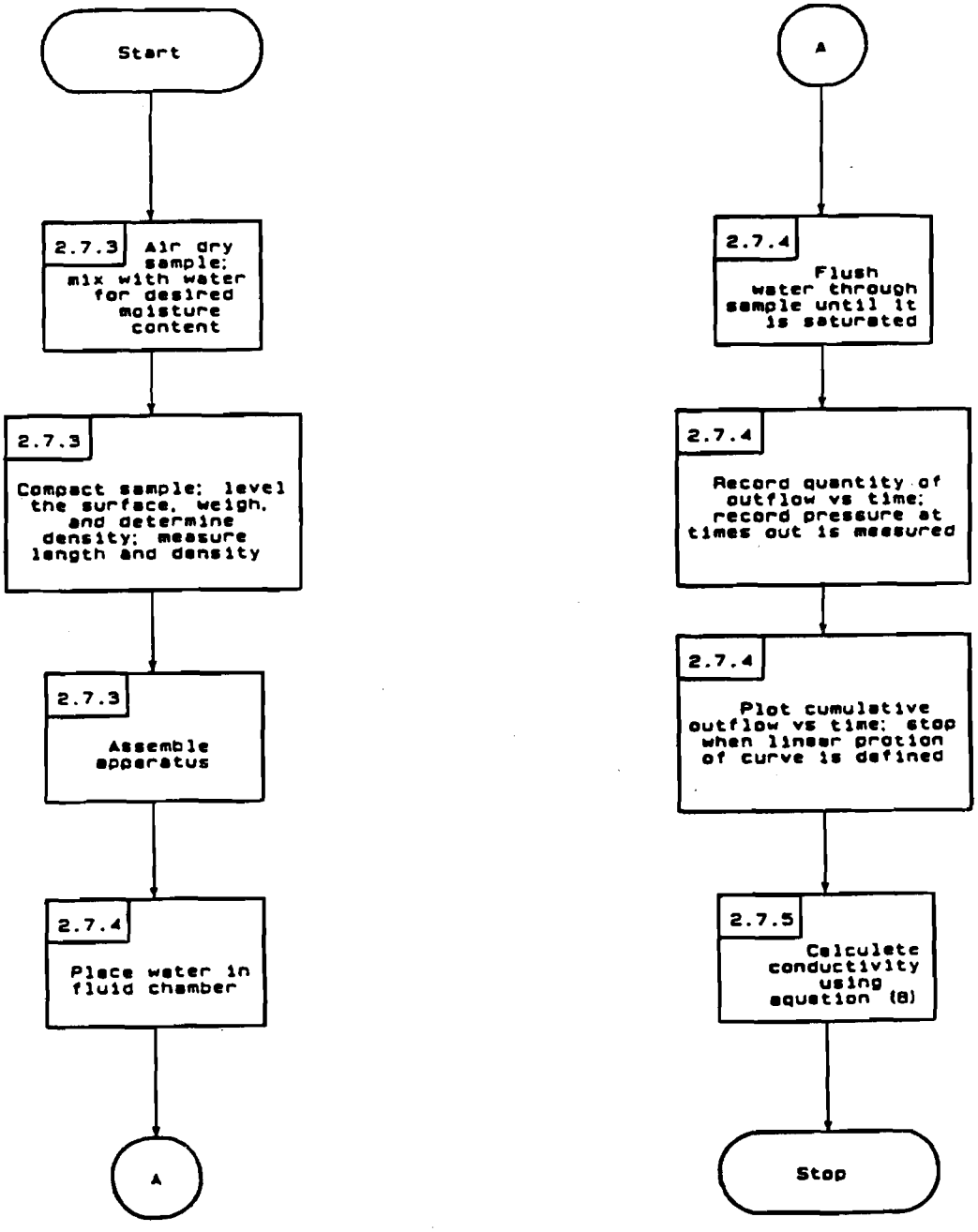

METHOD 9100

HYDRAULIC CONDUCTIVITY OF SOIL SAMPLES:

TRIAXIAL CELL METHOD WITH BACK PRESSURE

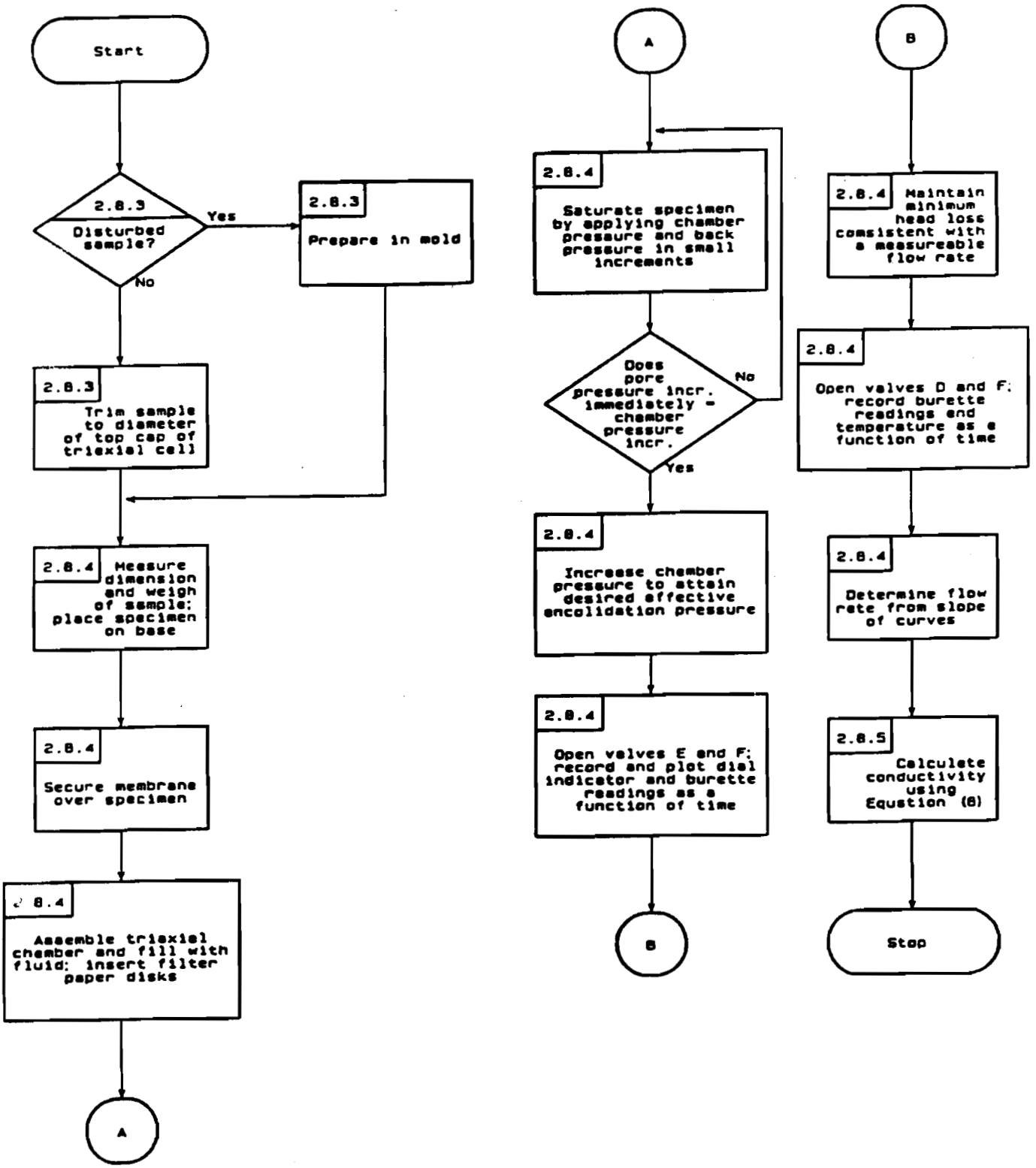

Revision 0
Date September 1986

METHOD 9100

HYDRAULIC CONDUCTIVITY OF SOIL SAMPLES:

PRESSURE-CHAMBER PARAMETER METHOD

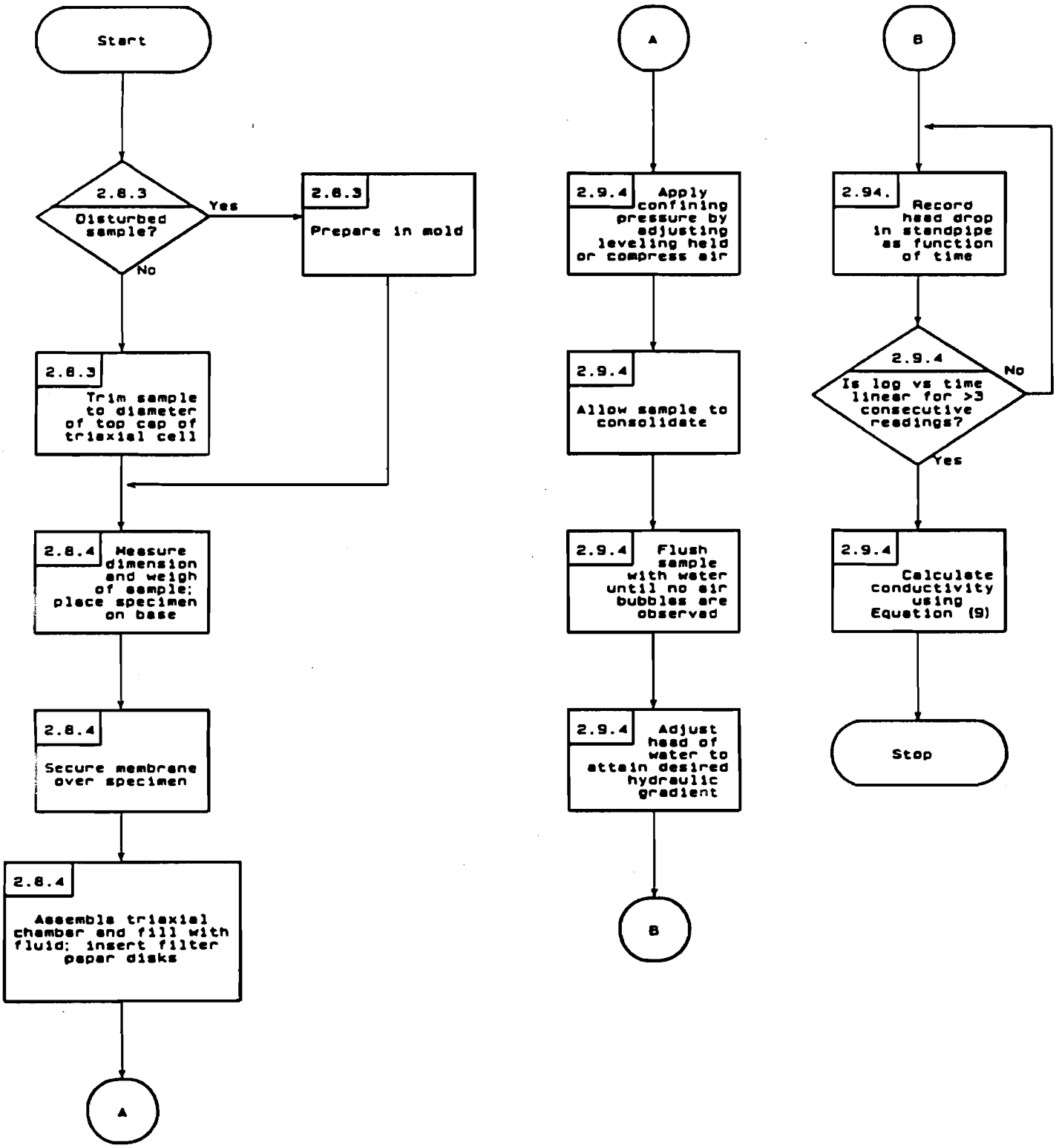

Revision 0
Date September 1986

METHOD 9100

HYDRAULIC CONDUCTIVITY OF SOIL SAMPLES:

FIELD METHODS FOR EXTREMELY TIGHT FORMATIONS UNDER CONFINED CONDITIONS

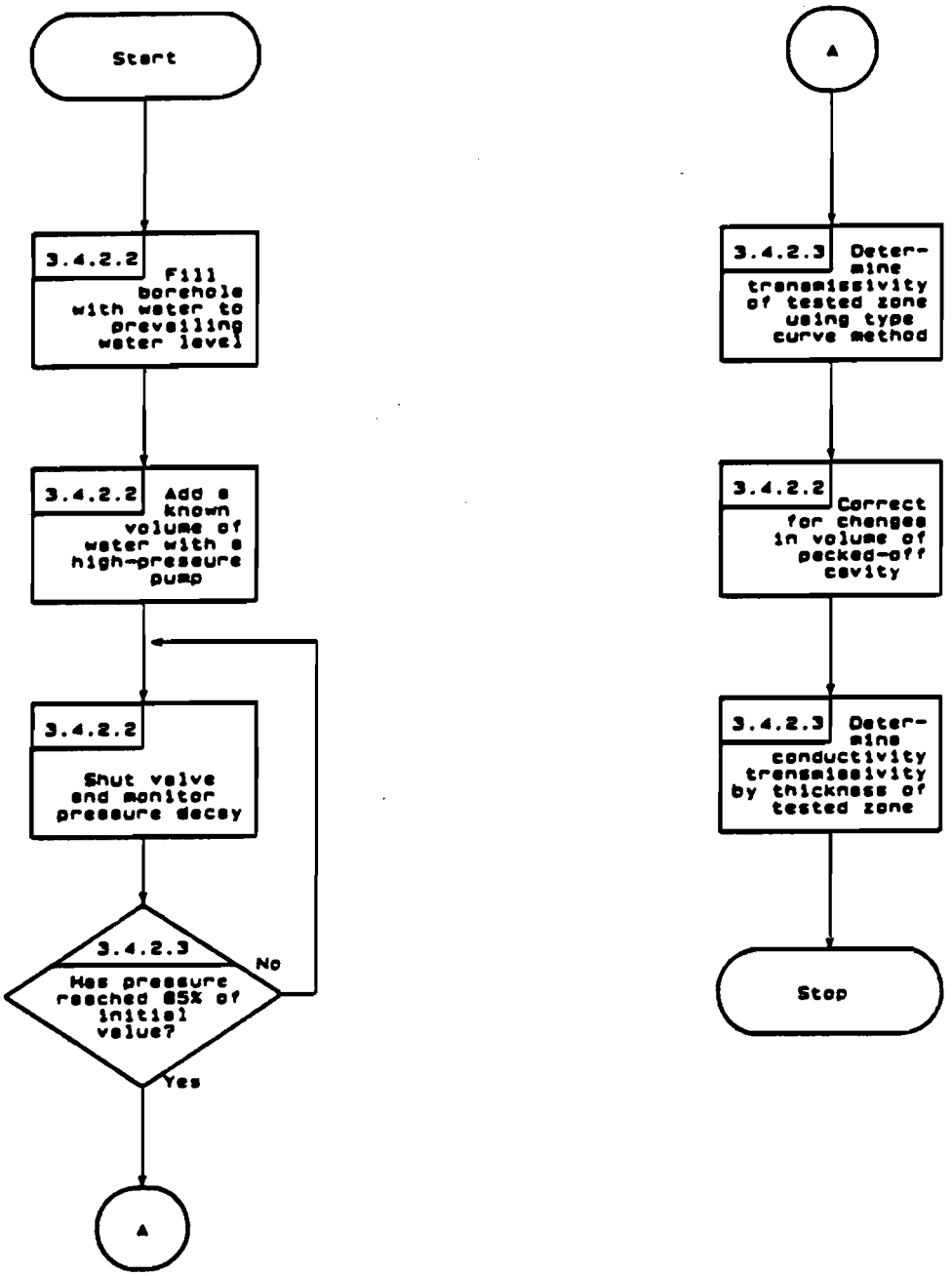

Revision 0
Date September 1986

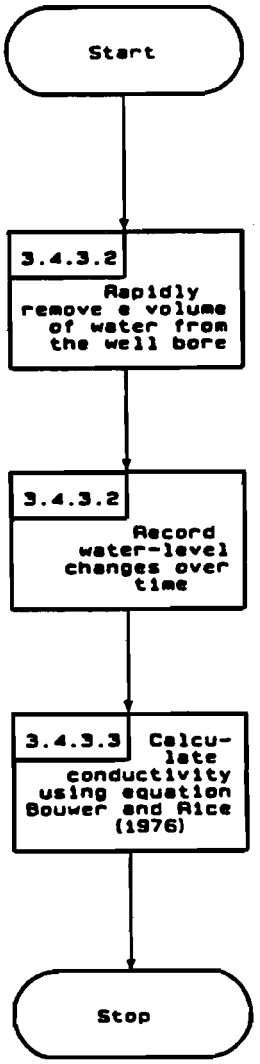
Start
3.4.3.2
Rapidly remove a volume of water from the well bore
3.4.3.2
Record water-level changes over time
3.4.3.3
Calculate conductivity using equation Bouwer and Rice (1976)
Stop

METHOD 9100

HYDRAULIC CONDUCTIVITY OF SOIL SAMPLES:

FIELD METHOD FOR MODERATELY PERMEABLE FORMATIONS UNDER CONFINED CONDITIONS

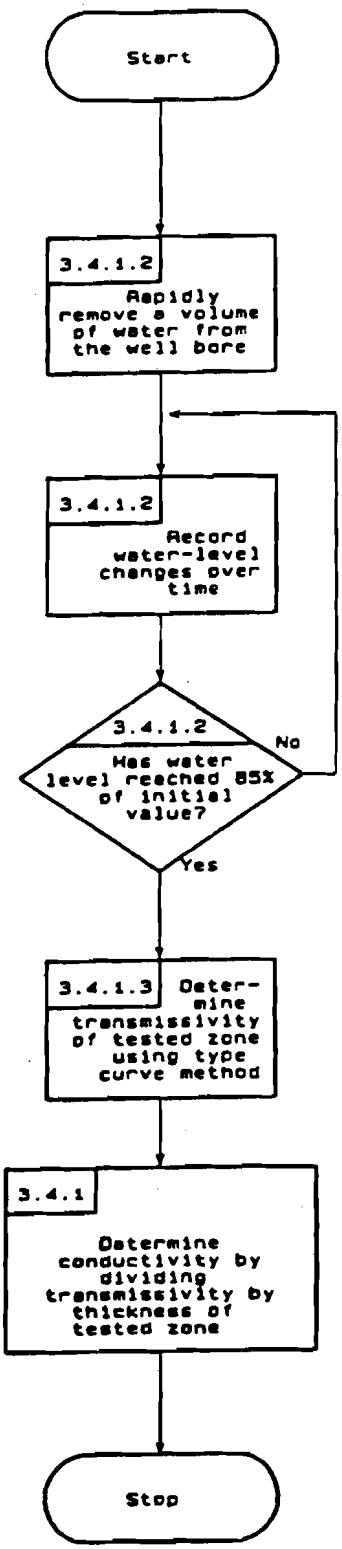

Revision 0
Date September 1986

METHOD 9310

GROSS ALPHA AND GROSS BETA

1.0 SCOPE AND APPLICATION

1.1 This method covers the measurement of gross alpha and gross beta particle activities in surface and ground waters.

1.2 The method is applicable to the measurement of alpha emitters having energies above 3.9 mega electron volts (MeV) and beta emitters having maximum energies above 0.1 MeV.

1.3 The minimum limit of concentration to which this method is applicable depends on sample size, counting-system characteristics, background, and counting time.

1.4 Because, in this method for gross alpha and gross beta measurement, the radioactivity of the sample is not separated from the solids of the sample, the solids concentration is very much a limiting factor in the sensitivity of the method for any given water sample. Also, for samples with very low concentrations of radioactivity, it is essential to analyze as large a sample aliquot as is needed to give reasonable times.

1.5 The largest sample aliquot that should be counted for gross alpha activity is that size aliquot which gives a solids density thickness of 5 mg/cm^2 in the counting planchet. For a 2-in. diameter counting planchet (20 cm^2), an aliquot containing 100 mg of nitrated dissolved solids would be the maximum aliquot size for that sample which should be evaporated and counted for gross alpha activity.

1.6 When the concentration of total solids (TS) is known for a given water sample and the alpha background and the counting efficiency of a given counting system are known, the counting time that is needed to meet the required sensitivity (3 pCi/L) can be determined by equations given in Appendix C.

1.7 For the counting of gross beta activity in a water sample, the TS is not as limiting as for gross alpha activity because beta particles are not stopped in solids as easily as are alpha particles. Very often a single sample aliquot is evaporated and counted for both gross alpha and gross beta activity. In that case, the sample aliquot size would be dictated by the solids limitations for alpha particles. For water samples that are to be counted for gross beta activity, equations in Appendix C can also be used to determine the necessary counting time to meet a sensitivity for gross beta activity (4 pCi/L).

1.8 Radionuclides that are volatile under the sample preparation conditions of this method will not be measured. In some areas of the country the nitrated water solids (sample evaporated with nitric acid present) will

not remain at a constant weight after being dried at 105°C for 2 hr and then exposed to the atmosphere before and during counting. Other radioactivities (such as some chemical forms of radioiodine) may also be lost during the sample evaporation and drying at 105°C. Those types of water samples need to be heated to a dull red heat for a few minutes to convert the salts to oxides. Sample weights are then usually sufficiently stable to give consistent counting rates, and a correct counting efficiency can then be assigned. Some radioactivities, such as the cesium radioisotopes, may be lost when samples are heated to a dull red color. Such losses are limitations of the test method.

1.9 This method provides a rapid screening measurement to indicate whether specific analyses are required. When the gross alpha particle activity exceeds 5 pCi/L, the same or an equivalent sample shall be analyzed for alpha-emitting radium isotopes (Method 9315) or an alternative measurement of radium-226 alpha emission (Standard Methods for the Examination of Water and Wastewater, 15th edition, Method 705 or 706, respectively). Gross beta particle emissions exceeding 15 pCi/L in a sample shall be analyzed for strontium-89 and cesium-134 (Standard Methods for the Examination of Water and Wastewater, 15th edition, Methods 704 and 709, respectively). If gross beta activity exceeds 50 pCi/L, the identity of the major radioactive constituents must be evaluated and the appropriate organ and total body doses determined.

2.0 SUMMARY OF METHOD

2.1 An aliquot of a preserved water sample is evaporated to a small volume and transferred quantitatively to a tared 2-in. stainless steel counting planchet. The sample residue is dried to constant weight, reweighed to determine dry residue weight, and then counted for alpha and/or beta radioactivity.

2.2 Counting efficiencies for both alpha and beta particle activities are selected according to the amount of sample solids from counting efficiency vs. sample solids standard curves.

3.0 INTERFERENCES

3.1 Moisture absorbed by the sample residue is an interference because it obstructs counting and self-absorption characteristics. If a sample is counted in an internal proportional counter, static charge on the sample residue can cause erratic counting, thereby preventing an accurate count.

3.2 Nonuniformity of the sample residue in counting planchet interferes with the accuracy and precision of the method.

3.3 Sample density on the planchet area should be not more than 10 mg/cm^2 for gross alpha and not more than 20 mg/cm^2 for gross beta.

3.4 When counting alpha and beta particle activity by a gas-flow proportional counting system, counting at the alpha plateau discriminates against beta particle activity, whereas counting at the beta plateau is sensitive to alpha particle activity present in the sample. This latter effect should be determined and compensated for during the calibration of the specific instrument being used.

4.0 APPARATUS AND MATERIALS

4.1 Gas-flow proportional counting system, or

4.2 Scintillation detection system, or

4.3 Stainless steel counting planchets.

4.4 Electric hot plate.

4.5 Drying oven.

4.6 Drying lamp.

4.7 Glass desiccator.

4.8 Glassware.

4.9 Analytical balance.

5.0 REAGENTS

5.1 All chemicals should be of "reagent-grade" or equivalent whenever they are commercially available.

5.2 Distilled or deionized water (Type II) having a resistance value between 0.5 and 2.0 megaohms (2.0 to 0.5 mhos)/cm at 25°C.

5.3 Nitric acid, 1 N: Mix 6.2 mL 16 N HNO_3 (conc.) with deionized or distilled water and dilute to 100 mL.

6.0 SAMPLE COLLECTION, PRESERVATION, AND HANDLING

6.1 All samples must have been collected in a manner which addresses the considerations discussed in Chapter Nine of this manual.

6.2 It is recommended that samples be preserved at the time of collection by adding enough 1 N HNO_3 to the sample to bring it to pH 2 (15 mL 1 N HNO_3 per liter of sample is usually sufficient). If samples are to be collected without preservation, they should be brought to the laboratory within 5 days and then preserved and held in the original container for a minimum of 16 hr before analysis or transfer of the sample

6.3 The container choice should be plastic rather than glass to prevent loss due to breakage during transportation and handling.

7.0 PROCEDURE

7.1 Calibration:

7.1.1 For absolute gross alpha and gross beta measurement, the detectors must be calibrated to obtain the ratio of count rate to disintegration rate. Americium-241 (used for alpha activity in the collaborative test of this method) has higher alpha particle energy and radium-226 radionuclides but is close to the energy of the alpha particles emitted by naturally occurring thorium-228 and radium-224. Standards should be prepared in the geometry and weight ranges to be encountered in these gross analyses. It is, therefore, the prescribed radionuclide for gross alpha calibration. NBS or NBS-traceable americium-241 is available from Standard Reference Materials Catalog, NBS Special Publications 260, U.S. Department of Commerce (1976) and from Quality Assurance Branch, EMSL-LV, P.O. Box 15027, Las Vegas, Nevada 89114.

7.1.2 Strontium-90 and cesium-137 have both been used quite extensively as standards for gross beta activity. Standard solutions of each of these radionuclides are readily available. Cesium is volatile at elevated temperatures (above 450°C). Some water supplies have dissolved solids (salts) that, when converted to nitrate salts, are quite hygroscopic and need to be converted to oxides by heating to red heat to obtain sample aliquots that are weight-stable. Sample weight stability is essential to gross alpha and gross beta measurements to ensure the accuracy of the self-absorption counting efficiency factor to be used for the samples. Strontium-90 in equilibrium with its daughter yttrium-90 is the prescribed radionuclide for gross beta calibrations.

7.1.3 For each counting instrument to be used, the analyst should prepare separate alpha and beta particle self-absorption graphs showing water sample residue weight (mg) vs. the efficiency factor (cpm/dpm), using standard alpha and beta emitter solutions and tap water. For the alpha graph standard, alpha activity is added to varying sizes of aliquots of tap water such that the aliquot residue weight is varied between 0 and 100 mg (for a 2-in. counting planchet). A similar graph is prepared with standard beta activity and tap-water aliquots, varying the residue weight between 0 and 300 mg (for a 2-in. planchet). If it is planned to use water-sample aliquot volumes that always contain 100 mg of dried water solids, then only the efficiency factor for that residue weight needs to be established.

7.1.4 Tap water aliquots, with added americium-241 or strontium-90 standard, should be acidified with a few mL 16 N HNO_3, evaporated to a small volume in a beaker on a hot plate, transferred quantitatively in 5-mL portions or less to a tared counting planchet, evaporated to dryness, and finally dried at 105°C for 1 hr (or flamed to a red heat if dried

solids appear to be noticeably hygroscopic). Weight-stable aliquot residues should then be alpha and/or beta counted until at least 10,000 total counts have been accumulated. A single set of reference standards prepared in this way can be used for each counting instrument for separate graph preparations and can be stored for reverification whenever needed.

7.2 Transfer to a beaker an aliquot of water sample of a volume that contains no more than 100 mg (for alpha only or alpha and beta determination) or 200 mg (for beta only determination) of total water solids. Evaporate the aliquot to near dryness on a hot plate. If water samples are known or suspected to contain chloride salts, those chloride salts should be converted to nitrate salts before the sample residue is transferred to a stainless steel planchet (chlorides will attack stainless steel and increase the sample solids, and no correction can be made for those added solids). Chloride salts can be converted to nitrate salts by adding 5-mL portions of 16 N HNO_3 to the sample residue and evaporating to near dryness. (Two treatments are usually sufficient.) Add 10 mL 1 N HNO_3 to the beaker and swirl to dissolve the residue. Quantitatively transfer the aliquot concentrate in small portions (not more than 5 mL at a time) to a tared planchet, evaporating each portion to dryness.

7.3 Dry the sample residue in a drying oven at 105°C for at least 1 hr, cool in a desiccator, weigh, and count. Store the sample residue in a desiccator until ready for counting.

7.4 Some types of water-dissolved solids, when converted to nitrate salts, are quite hygroscopic even after being dried at 105°C for 1 hr. When such hygroscopic salts are present with samples that are put into an automatic counting system, those samples gain weight while they are waiting to be counted, and inaccurate counting data result. When there is evidence of hygroscopic salts in sample counting planchets, it is recommended that they be flamed to a dull red heat with a Meeker burner for a few minutes to convert the nitrate salts to oxides before weighing and counting. (It is possible to have a loss of cesium during the flaming of the samples.)

7.5 Count for alpha and beta activity at their respective voltage plateaus. If the sample is to be recounted for reverification, store it in a desiccator.

NOTE: As long as counting chambers are capable of handling the same size planchet, alpha and beta activities can be determined at their respective voltage plateaus in the designated counting instruments. Keep the planchet in the desiccator until ready to count because vapors from moist residue can damage detector and window and can cause erratic measurements. If the gas-flow internal proportional counter does not discriminate for the higher energy alpha pulses at the beta plateau, the alpha activity must be subtracted from the beta plus alpha activity. This is particularly important for samples with high alpha activity.

7.6 Calculations:

7.6.1 Calculate the alpha radioactivity by the following equation:

$$\text{Alpha (pCi/liter)} = \frac{A \times 1{,}000}{2.22 \times C \times V}$$

where:

A = net alpha count rate (gross alpha count rate minus the background count rate) at the alpha voltage plateau;

C = alpha efficiency factor, read from the graph (Paragraph 7.1.3) of efficiency vs. mg of water solids per cm^2 of planchet area, cpm/dpm);

V = volume of sample aliquot (mL); and

2.22 = conversion factor from dpm/pCi.

7.6.2 Calculate the beta radioactivity by the following equations:

7.6.2.1 If there are no significant alpha counts when the sample is counted at the alpha voltage plateau, the beta activity can be determined from the following equation:

$$\text{Beta (pCi/liter)} = \frac{B \times 1{,}000}{2.22 \times D \times V}$$

where:

B = net beta count rate (gross alpha count rate minus the background count rate at the beta voltage plateau),

D = beta efficiency factor, read from the graph (Paragraph 7.1.3) of efficiency vs. mg of water solids per cm^2 of planchet area, (cpm/dpm).

V = volume of sample aliquot (mL).

2.22 = conversion factor from dpm/pCi.

7.6.3 When counting beta radioactivity in the presence of alpha radioactivity by gas-flow proportional counting systems (at the beta plateau), alpha particles are also counted. Because alpha particles are more readily absorbed by increasing sample thickness than beta particles, the alpha/beta count ratios vary with increasing sample thickness. Therefore, it is necessary to prepare a calibration curve by counting standards containing americium-241 with increasing thickness of solids on

the alpha plateau and then on the beta plateau, plotting the ratios of the two counts vs. density thickness. The alpha amplification factor (E) from that curve is used to correct the amplified alpha count on the beta plateau. When significant alpha activity is indicated by the sample count at the alpha voltage plateau, the beta activity of the sample can be determined by counting the sample at the beta voltage plateau and calculating the activity from the following equation:

$$\text{Beta (pCi/liter)} = \frac{(B - AE) \times 1{,}000}{2.22 \times D \times V}$$

where:

B = as defined above.

D = as defined above.

A = as defined above.

E = alpha amplification factor, read from the graph of the ratio of alpha counted at the beta voltage/alpha counted at the alpha voltage vs. sample density thickness.

V = volume of sample aliquot (mL).

2.22 = conversion factor from dpm/pCi.

7.7 Errors associated with the results of the analysis should also be reported.

8.0 QUALITY CONTROL

8.1 All quality control data should be maintained and available for easy reference or inspection.

8.2 Employ a minimum of one blank per sample batch to determine if contamination is occurring.

8.3 Run one duplicate sample for every 10 samples. A duplicate sample is a sample brought through the whole sample-preparation and analytical process.

8.4 Spiked samples or standard reference materials shall be periodically employed to ensure that correct procedures are being followed and that all equipment is operating properly.

9.0 METHOD PERFORMANCE

9.1 In a collaborative study of two sets of paired water samples containing known additions of radionuclides, 15 laboratories determined the gross alpha activity and 16 analyzed gross beta activity. The samples contained simulated water minerals of approximately 350 mg fixed solids/L. The alpha results of one laboratory were rejected as outliers.

The average recoveries of added gross alpha activity were 86, 87, 84, and 82%. The precision (random error) at the 95% confidence level was 20 and 24% for the two sets of paired samples. The method was biased low, but not seriously.

The average recoveries of added gross beta activity were 99, 100, 100, and 100%. The precision (random error) at the 95% confidence level was 12 and 18% for the two sets of paired samples. The method showed no bias.

10.0 REFERENCES

10.1 None required.

METHOD 9310

GROSS ALPHA AND GROSS BETA

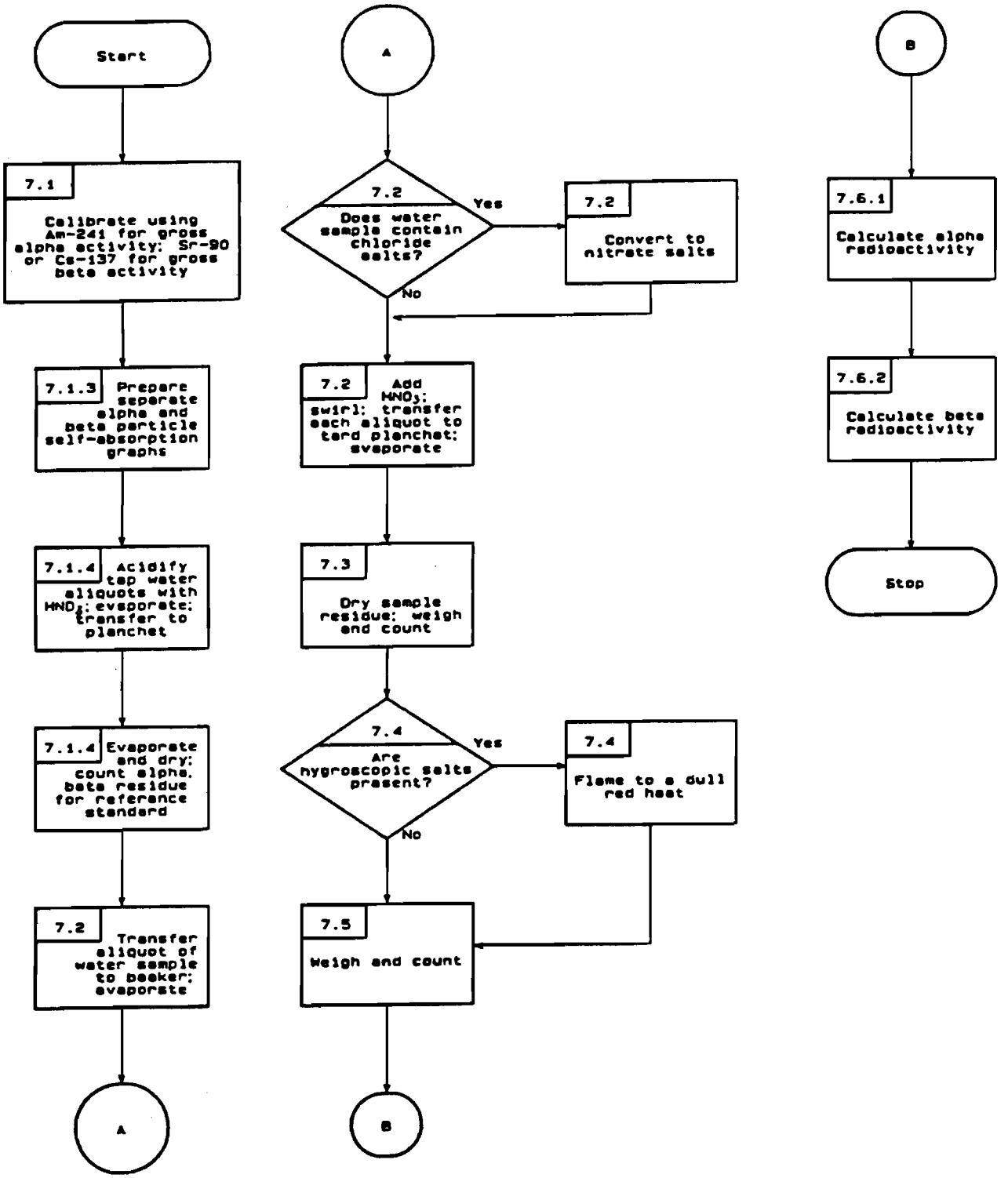

Revision 0
Date September 1986

METHOD 9315

ALPHA-EMITTING RADIUM ISOTOPES

1.0 SCOPE AND APPLICATION

1.1 This method covers the measurement of the total soluble alpha-emitting radioisotopes of radium, namely radium-223, radium-224, and radium-226, in surface and ground waters.

1.2 Although the method does not always give an accurate measurement of the radium-226 content of the sample (when other radium alpha emitters are present), it can be used to screen samples. When the total radium alpha activity of a drinking water sample is greater than 5 pCi/L, then the radium-226 analysis is required. If the level of radium-226 exceeds 3 pCi/L, the sample must also be measured for radium-228 (Method 9320).

1.3 Because this method provides for the separation of radium from other water-dissolved solids in the sample, the sensitivity of the method is a function of sample size, reagent and instrument background, counting efficiency, and counting time.

1.4 Absolute measurement can be made by calibrating the alpha detector with standard radium-226 in the geometry obtained with the final precipitate.

2.0 SUMMARY OF METHOD

2.1 The radium in the surface water or ground water sample is collected by coprecipitation with barium and lead sulfate and purified by reprecipitation from EDTA solution. Citric acid is added to the water sample to assure that complete interchange occurs before the first precipitation step. The final $BaSO_4$ precipitate, which includes radium-226, radium-224, and radium-223, is alpha counted to determine the total disintegration rate of the radium isotopes.

2.2 The radium activities are counted in an alpha counter where efficiency for determining radium-226 has been calibrated with a standard of known radium-226 activity. By making a correction for the ingrowth of alpha activity in radium-226 for the elapsed time after separation, one can determine radium activity in the sample. Because some daughter ingrowth can occur before the separated radium is counted, it is necessary to make activity corrections for the count rate. A table of ingrowth factors for various times after radium separation is provided in Paragraph 7.14.

3.0 INTERFERENCES

3.1 Inasmuch as the radiochemical yield of the radium activity is based on the chemical yield of the $BaSO_4$ precipitate, the presence of significant natural barium in the sample will result in a falsely high chemical yield.

3.2 Radium isotopes are separated from other alpha-emitting radionuclides by this method.

3.3 The alpha count of the separated radium must be corrected for its partially ingrown alpha-emitting daughters.

4.0 APPARATUS AND MATERIALS

4.1 Alpha scintillation or a gas-flow proportional alpha particle counting system with low background (<1 cpm).

4.2 Stainless steel counting planchets.

4.3 Electric hot plate.

4.4 Drying oven and/or drying lamp.

4.5 Glass desiccator.

4.6 Analytical balance.

4.7 Centrifuge.

4.8 Glassware.

5.0 REAGENTS

5.1 Distilled or deionized water (Type II).

5.2 Acetic acid, 17.4 N: glacial CH_3COOH (conc.), sp. gr. 1.05, 99.8%.

5.3 Ammonium sulfate, 200 mg/mL: Dissolve 20 g $(NH_4)_2SO_4$ in a minimum of water and dilute to 100 mL.

5.4 Barium carrier, 16 mg/mL, standardized:

5.4.1 Dissolve 2.846 g $BaCl_2 \cdot 2H_2O$ in water, add 0.5 mL 16 N HNO_3, and dilute to 100 mL with water.

5.4.2 To perform standardization (in triplicate): Pipette 2.0 mL carrier solution into a centrifuge tube containing 15 mL water. Add 1 mL 18 N H_2SO_4 with stirring and digest precipitate in a water bath for 10 min. Cool, centrifuge, and decant the supernatant. Wash precipitate with 15 mL water. Transfer the precipitate to a tared stainless steel planchet with a minimum of water. Dry under infrared lamp, store in desiccator, and weigh as $BaSO_4$.

5.5 Citric acid, 1 M: Dissolve 19.2 g $C_6H_8O_7 \cdot H_2O$ in water and dilute to 100 mL.

5.6 EDTA reagent, basic (0.25 M): Dissolve 20 g NaOH in 750 mL water, heat and slowly add 93 g disodium ethylenedinitriloacetate dihydrate ($Na_2C_{10}H_{14}O_8N_2 \cdot 2H_2O$). Heat and stir until dissolved; filter through coarse filter paper and dilute to 1 liter.

5.7 Lead carrier, 15 mg/mL: Dissolve 2.397 g $Pb(NO_3)_2$ in water, add 0.5 mL 16 N HNO_3, and dilute to 100 mL with water.

5.8 Sodium hydroxide, 6 N: Dissolve 24 g NaOH in 80 mL water and dilute to 100 mL.

5.9 Sulfuric acid, 18 N: Cautiously mix 1 volume 36 N H_2SO_4 (concentrated) with 1 volume of water.

5.10 Sulfuric acid, 0.1 N: Mix 1 volume 18 N H_2SO_4 with 179 volumes of water.

6.0 SAMPLE COLLECTION, PRESERVATION, AND HANDLING

6.1 All samples must have been collected in a manner which addresses the considerations discussed in Chapter Nine of this manual.

6.2 It is recommended that samples be preserved at the time of collection by adding enough 1 N HNO_3 to the sample to bring it to pH 2 (15 mL 1 N HNO_3 per liter of sample is usually sufficient). If samples are to be collected without preservation, they should be brought to the laboratory within 5 days and then preserved and held in the original container for a minimum of 16 hr before analysis or transfer of the sample.

6.3 The container choice should be plastic rather than glass to prevent loss due to breakage during transportation and handling.

7.0 PROCEDURE

7.1 Calibration:

7.1.1 The counting efficiency for radium alpha particles with barium sulfate carrier present must be determined using a standard (known) radium alpha activity and 32 mg of barium carrier as $BaSO_4$ (same carrier amount used in samples). This is done with spiked distilled water samples, and the procedure for regular samples is followed. Note the time of the Ra-$BaSO_4$ precipitation.

7.1.2 The radium alpha counting efficiency, E, is calculated as follows:

$$E\ (\text{cpm/dpm}) = \frac{C}{A \times I}$$

where:

C = sample net cpm (gross counts minus background divided by the counting time in minutes).

A = dpm of radium-226 added to sample.

I = ingrowth factor for the elapsed time from Ra-$BaSO_4$, precipitation to midpoint of counting time.

7.2 To a 1,000-mL surface water or ground water sample, add 5 mL 1 M $C_6H_8O_7 \cdot H_2O$, 1 mL lead carrier, and 2.0 mL barium carrier, and heat to boiling.

7.3 Cautiously, with vigorous stirring, add 20 mL 18 N H_2SO_4. Digest 5 to 10 min and let the mixed $BaSO_4$-$PbSO_4$ precipitate settle overnight. Decant and discard supernate.

7.4 Transfer the precipitate to a centrifuge tube with a minimum amount of 0.1 N H_2SO_4. Centrifuge and discard supernate.

7.5 Wash the precipitate twice with 0.1 N H_2SO_4. Centrifuge and discard washes.

7.6 Dissolve the precipitate by adding 15 mL basic EDTA reagent; heat in a hot-water bath and add a few drops 6 N NaOH until solution is complete.

7.7 Add 1 mL $(NH_4)_2SO_4$ (200 mg/mL) and stir thoroughly. Add 17.4 N CH_3COOH dropwise until precipitation begins and then add 2 mL extra. Digest 5 to 10 min.

7.8 Centrifuge, discard the supernate, and record time.
NOTE: At this point, the separation of the $BaSO_4$ is complete, and the ingrowth of radon (and daughters) commences.

7.9 Wash the $BaSO_4$ precipitate with 15 mL water, centrifuge, and discard wash.

7.10 Transfer the precipitate to a tared stainless steel planchet with a minimum of water and dry under infrared lamps.
NOTE: Drying should be rapid, but not too vigorous, to minimize any loss of radon-222 that has already grown into the precipitate.

7.11 Cool, weigh, and store in desiccator.

7.12 Count in a gas-flow internal proportional counter or an alpha scintillation counter to determine the alpha activity.

7.13 Calculation:

7.13.1 Calculate the radium-226 concentration, D (which would include any radium-224 and radium-223 that is present), in picocuries per liter as follows:

$$D = \frac{C}{2.22 \times E \times V \times R \times I}$$

where:

C = net count rate, cpm.

E = counter efficiency, for radium-226 in $BaSO_4$ predetermined for this procedure (see Paragraph 7.1.2).

V = liters of sample used.

R = fractional chemical yield.

I = ingrowth correction factor (see Paragraph 7.14).

2.22 = conversion factor from dpm/pCi.

7.14 It is not always possible to count the $BaSO_4$ precipitate immediately after separation; therefore, corrections must be made for the ingrowth of the radium-226 daughters between the time of separation and counting, according to the following table:

Hours from separation to counting	Ingrowth correction factor
0	1.00
1	1.02
2	1.04
3	1.06
4	1.08
5	1.10
6	1.12
24	1.49
48	1.91
72	2.25
96	2.54
120	2.78
144	2.99
192	3.29
240	3.51

8.0 QUALITY CONTROL

8.1 All quality control data should be maintained and available for easy reference or inspection.

8.2 Employ a minimum of one blank per sample batch to determine if contamination or any memory effects are occurring.

8.3 Run one duplicate sample for every 10 samples. A duplicate sample is a sample brought through the whole sample-preparation process.

8.4 Spiked samples or standard reference materials shall be periodically employed to ensure that correct procedures are being followed and that all equipment is operating properly.

9.0 METHOD PERFORMANCE

9.1 No data provided.

10.0 REFERENCES

10.1 None required.

METHOD 9315

ALPHA-EMITTING RADIUM ISOTOPES

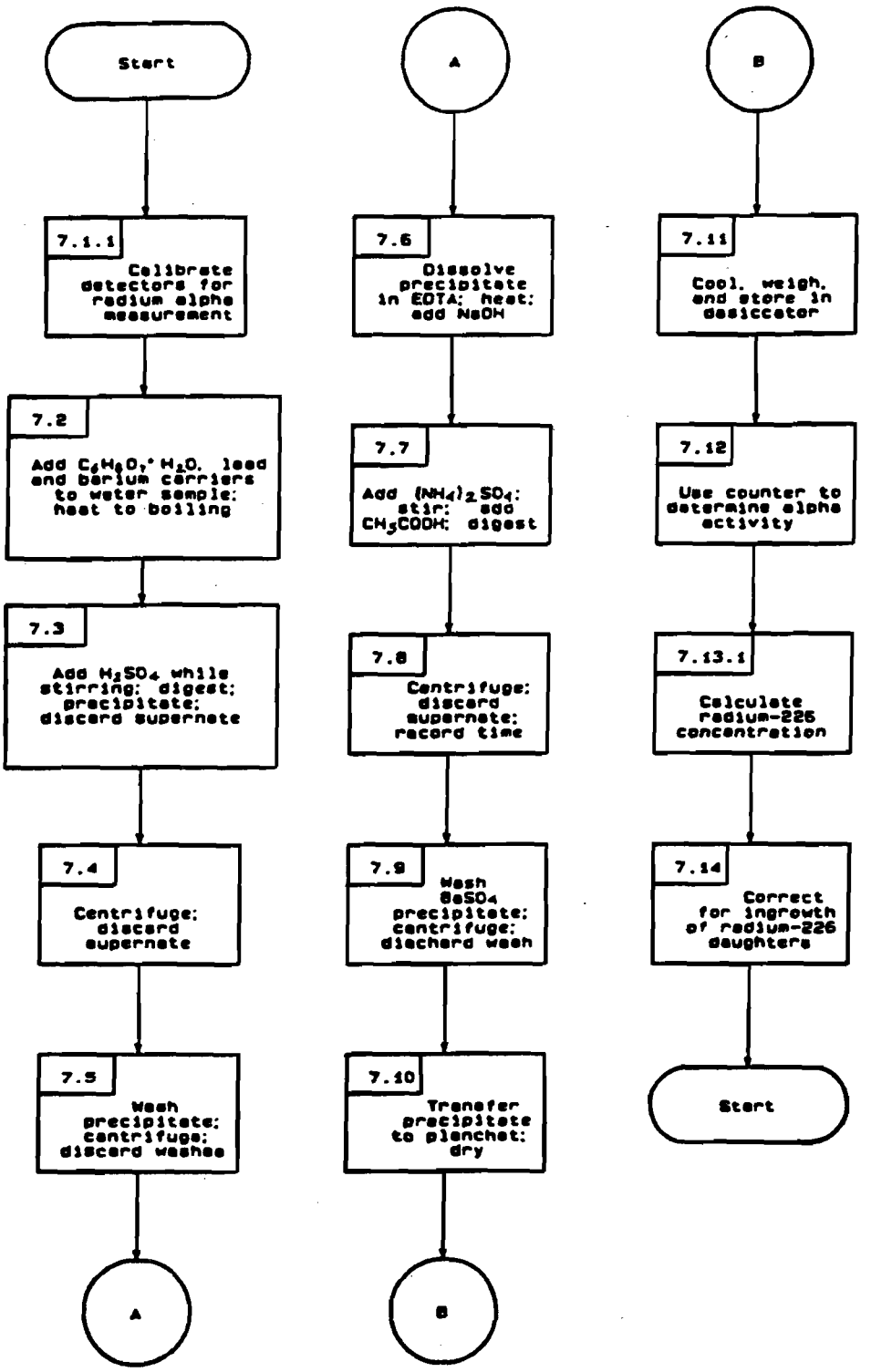

Revision 0
Date September 1986

PART II CHARACTERISTICS

Revision 0
Date September 1986

CHAPTER SEVEN

INTRODUCTION AND REGULATORY DEFINITIONS

7.1 IGNITABILITY

7.1.1 Introduction

This section discusses the hazardous characteristic of ignitability. The regulatory background of this characteristic is summarized, and the regulatory definition of ignitability is presented. The two testing methods associated with this characteristic, Methods 1010 and 1020, can be found in Chapter Eight.

The objective of the ignitability characteristic is to identify wastes that either present fire hazards under routine storage, disposal, and transportation or are capable of severely exacerbating a fire once started.

7.1.2 Regulatory Definition

The following definitions have been taken nearly verbatim from the RCRA regulations (40 CFR 261.21) and the DOT regulations (49 CFR §§ 173.300 and 173.151).

Characteristics Of Ignitability Regulation

A solid waste exhibits the characteristic of ignitability if a representative sample of the waste has any of the following properties:

1. It is a liquid, other than an aqueous solution, containing < 24% alcohol by volume, and it has a flash point < 60°C (140°F), as determined by a Pensky-Martens Closed Cup Tester, using the test method specified in ASTM Standard D-93-79 or D-93-80, or a Setaflash Closed Cup Tester, using the test method specified in ASTM standard D-3278-78, or as determined by an equivalent test method approved by the Administrator under the procedures set forth in Sections 260.20 and 260.21. (ASTM standards are available from ASTM, 1916 Race Street, Philadelphia, PA 19103.)

2. It is not a liquid and is capable, under standard temperature and pressure, of causing fire through friction, absorption of moisture, or spontaneous chemical changes and, when ignited, burns so vigorously and persistently that it creates a hazard.

3. It is an ignitable compressed gas, as defined in 49 CFR 173.300 and as determined by the test methods described in that regulation or by equivalent test methods approved by the Administrator under Sections 260.20 and 260.21.

4. It is an oxidizer, as defined in 49 CFR 173.151.

Ignitable Compressed Gas

For the purpose of this regulation the following terminology is defined:

1. Compressed gas. The term "compressed gas" shall designate any material or mixture having in the container an absolute pressure exceeding 40 psi at 21°C (70°F) or, regardless of the pressure at 21°C (70°F), having an absolute pressure exceeding 104 psi at 54°C (130°F), or any liquid flammable material having a vapor pressure exceeding 40 psi absolute at 38°C (100°F), as determined by ASTM Test D-323.

2. Ignitable compressed gas. Any compressed gas, as defined in Paragraph 1, above, shall be classed as an "ignitable compressed gas" if any one of the following occurs:

   a. Either a mixture of 13% or less (by volume) with air forms a flammable mixture, or the flammable range with air is wider than 12%, regardless of the lower limit. These limits shall be determined at atmospheric temperature and pressure. The method of sampling and test procedure shall be acceptable to the Bureau of Explosives.

   b. Using the Bureau of Explosives' Flame Projection Apparatus (see Note, below), the flame projects more than 18 in. beyond the ignition source with valve opened fully, or the flame flashes back and burns at the valve with any degree of valve opening.

   c. Using the Bureau of Explosives' Open Drum Apparatus (see Note, below), there is any significant propagation of flame away from the ignition source.

   d. Using the Bureau of Explosives' Closed Drum Apparatus (see Note, below), there is any explosion of the vapor-air mixture in the drum.

NOTE: Descriptions of the Bureau of Explosives' Flame Projection Apparatus, Open Drum Apparatus, Closed Drum Apparatus, and method of tests may be procured from the Association of American Railroads, Operations and Maintenance Dept., Bureau of Explosives, American Railroad Building, Washington, DC. 20036; 202-293-4048.

Oxidizer (as defined in 49 CFR 173.151)

For the purpose of this regulation, an oxidizer is any material that yields oxygen readily to stimulate the combustion of organic matter (e.g., chlorate, permanganate, inorganic peroxide, or a nitrate).

7.2 CORROSIVITY

7.2.1 Introduction

The corrosivity characteristic, as defined in 40 CFR 261.22, is designed to identify wastes that might pose a hazard to human health or the environment due to their ability to:

1. Mobilize toxic metals if discharged into a landfill environment;

2. Corrode handling, storage, transportation, and management equipment; or

3. Destroy human or animal tissue in the event of inadvertent contact.

In order to identify such potentially hazardous materials, EPA has selected two properties upon which to base the definition of a corrosive waste. These properties are pH and corrosivity toward Type SAE 1020 steel.

The following sections present the regulatory background and the regulation pertaining to the definition of corrosivity. The procedures for measuring pH of aqueous wastes are detailed in Method 9040, Chapter Six. Method 1110, Chapter Eight, describes how to determine whether a waste is corrosive to steel. Use Method 9095, Paint Filter Liquids Test, Chapter Six, to determine free liquid.

7.2.2 Regulatory Definition

The following material has been taken nearly verbatim from the RCRA regulations.

1. A solid waste exhibits the characteristic of corrosivity if a representative sample of the waste has either of the following properties:

   a. It is aqueous and has a pH $\leq$ 2 or $\geq$ 12.5, as determined by a pH meter using either the test method specified in this manual (Method 9040) or an equivalent test method approved by the Administrator under the procedures set forth in Sections 260.20 and 260.21.

   b. It is a liquid and corrodes steel (SAE 1020) at rate > 6.35 mm (0.250 in.) per year at a test temperature of 55°C (130°F), as determined by the test method specified in NACE (National Association of Corrosion Engineers) Standard TM-01-69, as standardized in this manual (Method 1110) or an equivalent test method approved by the Administrator under the procedures set forth in Sections 260.20 and 260.21.

7.3 REACTIVITY

7.3.1 Introduction

The regulation in 40 CFR 261.23 defines reactive wastes to include wastes that have any of the following properties: (1) readily undergo violent chemical change; (2) react violently or form potentially explosive mixtures with water; (3) generate toxic fumes when mixed with water or, in the case of cyanide- or sulfide-bearing wastes, when exposed to mild acidic or basic conditions; (4) explode when subjected to a strong initiating force; (5) explode at normal temperatures and pressures; or (6) fit within the Department of Transportation's forbidden explosives, Class A explosives, or Class B explosives classifications.

This definition is intended to identify wastes that, because of their extreme instability and tendency to react violently or explode, pose a problem at all stages of the waste management process. The definition is to a large extent a paraphrase of the narrative definition employed by the National Fire Protection Association. The Agency chose to rely almost entirely on a descriptive, prose definition of reactivity because most of the available tests for measuring the variegated class of effects embraced by the reactivity definition suffer from a number of deficiencies.

7.3.2 Regulatory Definition

7.3.2.1 Characteristic Of Reactivity Regulation

A solid waste exhibits the characteristic of reactivity if a representative sample of the waste has <u>any</u> of the following properties:

1. It is normally unstable and readily undergoes violent change without detonating.

2. It reacts violently with water.

3. It forms potentially explosive mixtures with water.

4. When mixed with water, it generates toxic gases, vapors, or fumes in a quantity sufficient to present a danger to human health or the environment.

5. It is a cyanide- or sulfide-bearing waste which, when exposed to pH conditions between 2 and 12.5, can generate toxic gases, vapors, or fumes in a quantity sufficient to present a danger to human health or the environment. (Interim Guidance for Reactive Cyanide and Reactive Sulfide, Steps 7.3.3 and 7.3.4 below, can be used to detect the presence of reactive cyanide and reactive sulfide in wastes.)

6. It is capable of detonation or explosive reaction if it is subjected to a strong initiating source or if heated under confinement.

7. It is readily capable of detonation or explosive decomposition or reaction at standard temperature and pressure.

8. It is a forbidden explosive, as defined in 49 CFR 173.51, or a Class A explosive, as defined in 49 CFR 173.53, or a Class B explosive, as defined in 49 CFR 173.88.

7.3.3 Interim Guidance For Reactive Cyanide

7.3.3.1 The current EPA guidance level is:

Total releasable cyanide: 250 mg HCN/kg waste.

7.3.3.2 Test Method to Determine Hydrogen Cyanide Released from Wastes

1.0 SCOPE AND APPLICATION

1.1 This method is applicable to all wastes, with the condition that wastes that are combined with acids do not form explosive mixtures.

1.2 This method provides a way to determine the specific rate of release of hydrocyanic acid upon contact with an aqueous acid.

1.3 This test measures only the hydrocyanic acid evolved at the test conditions. It is not intended to measure forms of cyanide other than those that are evolvable under the test conditions.

2.0 SUMMARY OF METHOD

2.1 An aliquot of acid is added to a fixed weight of waste in a closed system. The generated gas is swept into a scrubber. The analyte is quantified. The procedure for quantifying the cyanide is Method 9010, Chapter Five, starting with Step 7.2.7 of that method.

3.0 INTERFERENCES

3.1 Interferences are undetermined.

4.0 APPARATUS AND MATERIALS (See Figure 1)

4.1 Round-bottom flask - 500-mL, three-neck, with 24/40 ground-glass joints.

4.2 Gas scrubber - 50 mL calibrated scrubber

4.3 Stirring apparatus - To achieve approximately 30 rpm. This may be either a rotating magnet and stirring bar combination or an overhead motor-driven propeller stirrer.

4.4 Addition funnel - With pressure-equalizing tube and 24/40 ground-glass joint and Teflon sleeve.

4.5 Flexible tubing - For connection from nitrogen supply to apparatus.

4.6 Water-pumped or oil-pumped nitrogen gas - With two-stage regulator.

4.7 Rotometer - For monitoring nitrogen gas flow rate.

4.8 Analytical balance - capable of weighing to 0.001 g.

5.0 REAGENTS

5.1 Reagent grade chemicals shall be used in all tests. Unless otherwise indicated, it is intended that all reagents shall conform to the specifications of the Committee on Analytical Reagents of the American Chemical Society, where such specifications are available. Other grades may be used, provided it is first ascertained that the reagent is of sufficiently high purity to permit its use without lessening the accuracy of the determination.

5.2 Reagent water. All references to water in this method refer to reagent water, as defined in Chapter One.

5.3 Sulfuric acid (0.01N), H_2SO_4. Add 2.8 mL concentrated H_2SO_4 to reagent water and dilute to 1 L. Withdraw 100 mL of this solution and dilute to 1 L to make the 0.01N H_2SO_4.

5.4 Cyanide reference solution, (1000 mg/L). Dissolve approximately 2.5 g of KOH and 2.51 g of KCN in 1 liter of reagent water. Standardize with 0.0192N $AgNO_3$. Cyanide concentration in this solution should be 1 mg/mL.

5.5 Sodium hydroxide solution (1.25N), NaOH. Dissolve 50 g of NaOH in reagent water and dilute to 1 liter with reagent water.

5.6 Sodium hydroxide solution (0.25N), NaOH. Dilute 200 mL of 1.25N sodium hydroxide solution (Step 5.5) to 1 liter with reagent water.

5.7 Silver nitrate solution (0.0192N). Prepare by crushing approximately 5 g of $AgNO_3$ crystals and drying to constant weight at 40°C. Weigh 3.265 g of dried $AgNO_3$, dissolve in reagent water, and dilute to 1 liter.

6.0 SAMPLE COLLECTION, PRESERVATION AND HANDLING

6.1 Samples containing, or suspected of containing, sulfide or a combination of sulfide and cyanide wastes should be collected with a minimum of aeration. The sample bottle should be filled completely, excluding all head space, and stoppered. Analysis should commence as soon as possible, and samples should be kept in a cool, dark place until analysis begins.

6.2 It is suggested that samples of cyanide wastes be tested as quickly as possible. Although they can be preserved by adjusting the sample pH to 12 with strong base, this will cause dilution of the sample, increase the ionic strength, and, possibly, change other physical or chemical

characteristics of the waste which may affect the rate of release of the hydrocyanic acid. Storage of samples should be under refrigeration and in the dark.

6.3 Testing should be performed in a ventilated hood.

7.0 PROCEDURE

7.1 Add 50 mL of 0.25N NaOH solution (Step 5.6) to a calibrated scrubber and dilute with reagent water to obtain an adequate depth of liquid.

7.2 Close the system and adjust the flow rate of nitrogen, using the rotometer. Flow should be 60 mL/min.

7.3 Add 10 g of the waste to be tested to the system.

7.4 With the nitrogen flowing, add enough sulfuric acid to fill the flask half full. Start the 30 minute test period.

7.5 Begin stirring while the acid is entering the round-bottom flask. The stirring speed must remain constant throughout the test.

NOTE: The stirring should not be fast enough to create a vortex.

7.6 After 30 minutes, close off the nitrogen and disconnect the scrubber. Determine the amount of cyanide in the scrubber by Method 9010, Chapter Five, starting with Step 7.2.7 of the method.

NOTE: Delete the "C" and "D" terms from the spectrophotometric procedure calculation and the "E" and "F" terms from the titration procedure calculation in Method 9010. These terms are not necessary for the reactivity determination because the terms determine the amount of cyanide in the entire sample, rather than only in the aliquot taken for analysis.

8.0 CALCULATIONS

8.1 Determine the specific rate of release of HCN, using the following parameters:

X = Concentration of HCN in diluted scrubber solution (mg/L)
(This is obtained from Method 9010.)

L = Volume of solution in scrubber (L)

W = Weight of waste used (kg)

S = Time of measurement (sec.) = Time N_2 stopped - Time N_2 started

$$R = \text{specific rate of release (mg/kg/sec.)} = \frac{X \cdot L}{W \cdot S}$$

Total releasable HCN (mg/kg) = R x S

9.0 METHOD PERFORMANCE

9.1 The operation of the system can be checked and verified using the cyanide reference solution (Step 5.4). Perform the procedure using the reference solution as a sample and determine the percent recovery. Evaluate the standard recovery based on historical laboratory data, as stated in Chapter One.

10.0 REFERENCES

10.1 No references are available at this time.

FIGURE 1.

APPARATUS TO DETERMINE HYDROGEN CYANIDE RELEASED FROM WASTES

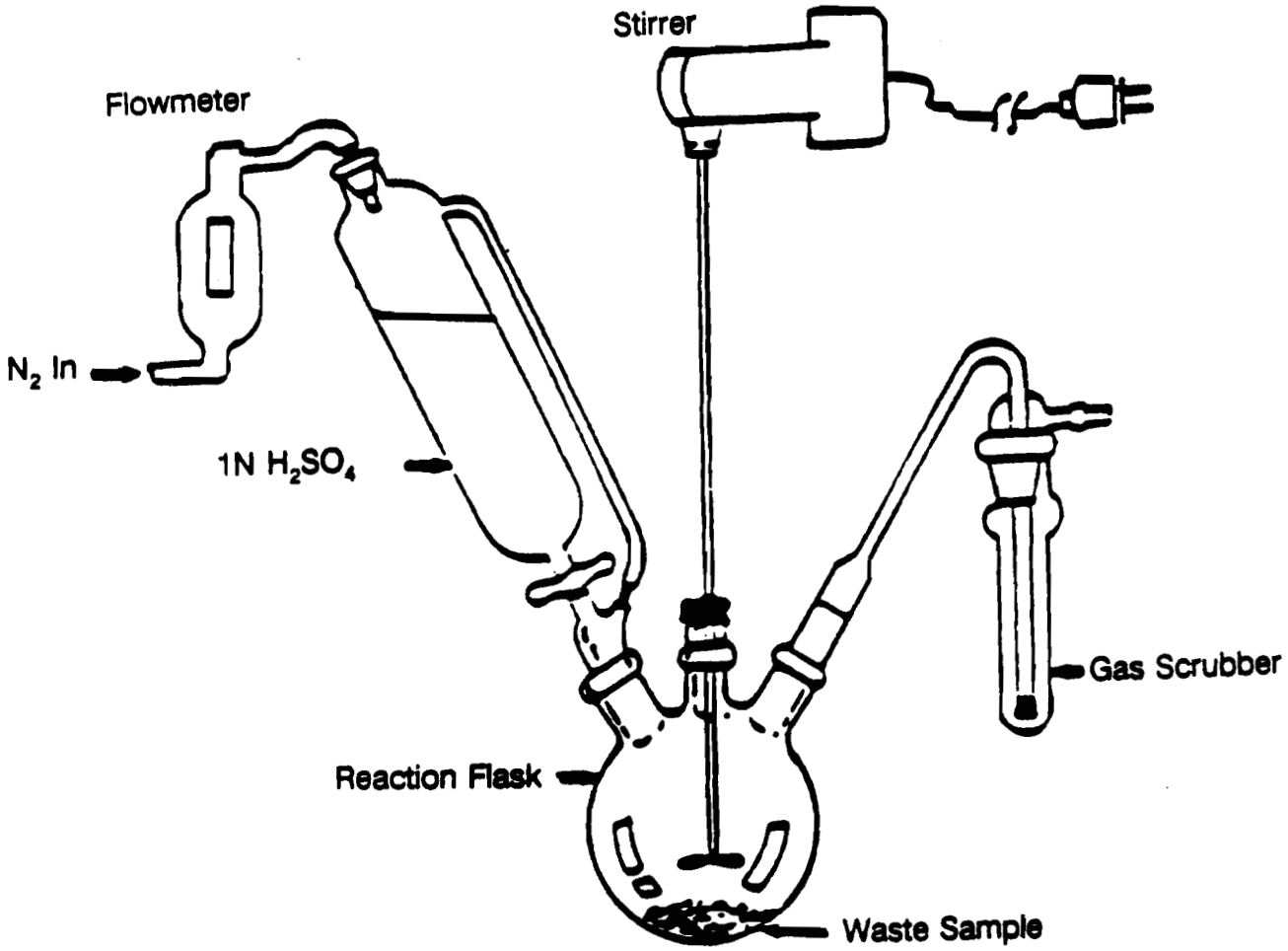

7.3.4 Interim Guidance For Reactive Sulfide

7.3.4.1 The current EPA guidance level is:

Total releasable sulfide: 500 mg H_2S/kg waste.

7.3.4.2 Test Method to Determine Hydrogen Sulfide Released from Wastes

1.0 SCOPE AND APPLICATION

1.1 This method is applicable to all wastes, with the condition that waste that are combined with acids do not form explosive mixtures.

1.2 This method provides a way to determine the specific rate of release of hydrogen sulfide upon contact with an aqueous acid.

1.3 This procedure releases only the hydrogen sulfide evolved at the test conditions. It is not intended to measure forms of sulfide other than those that are evolvable under the test conditions.

2.0 SUMMARY OF METHOD

2.1 An aliquot of acid is added to a fixed weight of waste in a closed system. The generated gas is swept into a scrubber. The analyte is quantified. The procedure for quantifying the sulfide is given in Method 9030, Chapter Five, starting with Step 7.3 of that method.

3.0 INTERFERENCES

3.1 Interferences are undetermined.

4.0 APPARATUS AND MATERIALS (See Figure 2)

4.1 Round-bottom flask - 500-mL, three-neck, with 24/40 ground-glass joints.

4.2 Gas scrubber - 50 mL calibrated scrubber.

4.3 Stirring apparatus - To achieve approximately 30 rpm. This may be either a rotating magnet and stirring bar combination or an overhead motor-driven propeller stirrer.

4.4 Addition funnel - With pressure-equalizing tube and 24/40 ground-glass joint and Teflon sleeve.

4.5 Flexible tubing - For connection from nitrogen supply to apparatus.

4.6 Water-pumped or oil-pumped nitrogen gas - With two-stage regulator.

4.7 Rotometer - For monitoring nitrogen gas flow rate.

4.8 Analytical balance - capable of weighing to 0.001 g.

5.0 REAGENTS

5.1 Reagent grade chemicals shall be used in all tests. Unless otherwise indicated, it is intended that all reagents shall conform to the specifications of the Committee on Analytical Reagents of the American Chemical Society, where such specifications are available. Other grades may be used, provided it is first ascertained that the reagent is of sufficiently high purity to permit its use without lessening the accuracy of the determination.

5.2 Reagent water. All references to water in this method refer to reagent water, as defined in Chapter One.

5.3 Sulfuric acid (0.01N), H_2SO_4. Add 2.8 mL concentrated H_2SO_4 to reagent water and dilute to 1 L. Withdraw 100 mL of this solution and dilute to 1 L to make the 0.01N H_2SO_4.

5.4 Sulfide reference solution - Dissolve 4.02 g of $Na_2S \cdot 9H_2O$ in 1.0 L of reagent water. This solution contains 570 mg/L hydrogen sulfide. Dilute this stock solution to cover the analytical range required (100-570 mg/L).

5.5 Sodium hydroxide solution (1.25N), NaOH. Dissolve 50 g of NaOH in reagent water and dilute to 1 L with reagent water.

5.6 Sodium hydroxide solution (0.25N), NaOH. Dilute 200 mL of 1.25N sodium hydroxide solution (Step 5.5) to 1 L with reagent water.

6.0 SAMPLE COLLECTION, PRESERVATION AND HANDLING

6.1 Samples containing, or suspected of containing, sulfide wastes should be collected with a minimum of aeration. The sample bottle should be filled completely, excluding all head space, and stoppered. Analysis should commence as soon as possible, and samples should be kept in a cool, dark place until analysis begins.

6.2 It is suggested that samples of sulfide wastes be tested as quickly as possible. Although they can be preserved by adjusting the sample pH to 12 with strong base and adding zinc acetate to the sample, these will cause dilution of the sample, increase the ionic strength, and, possibly, change other physical or chemical characteristics of the waste which may affect the rate of release of the hydrogen sulfide. Storage of samples should be under refrigeration and in the dark.

6.3 Testing should be performed in a ventilated hood.

7.0 PROCEDURE

7.1 Add 50 mL of 0.25N NaOH solution to a calibrated scrubber and dilute with reagent water to obtain an adequate depth of liquid.

7.2 Assemble the system and adjust the flow rate of nitrogen, using the rotometer. Flow should be 60 mL/min.

7.3 Add 10 g of the waste to be tested to the system.

7.4 With the nitrogen flowing, add enough sulfuric acid to fill the flask half full, while starting the 30 minute test period.

7.5 Begin stirring while the acid is entering the round-bottom flask. The stirring speed must remain constant throughout the test.

NOTE: The stirring should not be fast enough to create a vortex.

7.6 After 30 minutes, close off the nitrogen and disconnect the scrubber. Determine the amount of sulfide in the scrubber by Method 9030, Chapter Five, starting with Step 7.3 of that method.

7.7 Substitute the following for Step 7.3.2 in Method 9030: The trapping solution must be brought to a pH of 2 before proceeding. Titrate a small aliquot of the trapping solution to a pH 2 end point with 6N HCl and calculate the amount of HCl needed to acidify the entire scrubber solution. Combine the small acidified aliquot with the remainder of the acidified scrubber solution.

8.0 CALCULATIONS

8.1 Determine the specific rate of release of H_2S, using the following parameters:

X = Concentration of H_2S in scrubber (mg/L)
(This is obtained from Method 9030.)

L = Volume of solution in scrubber (L)

W = Weight of waste used (kg)

S = Time of experiment (sec.) = Time N_2 stopped - Time N_2 started

$$R = \text{specific rate of release (mg/kg/sec.)} = \frac{X \cdot L}{W \cdot S}$$

Total releasable H_2S (mg/kg) = R x S

9.0 METHOD PERFORMANCE

9.1 The operation of the system can be checked and verified using the sulfide reference solution (Step 5.4). Perform the procedure using the reference solution as a sample and determine the percent recovery. Evaluate the standard recovery based on historical laboratory data, as stated in Chapter One.

10.0 REFERENCES

10.1 No references are available at this time.

FIGURE 2.

APPARATUS TO DETERMINE HYDROGEN SULFIDE RELEASED FROM WASTES

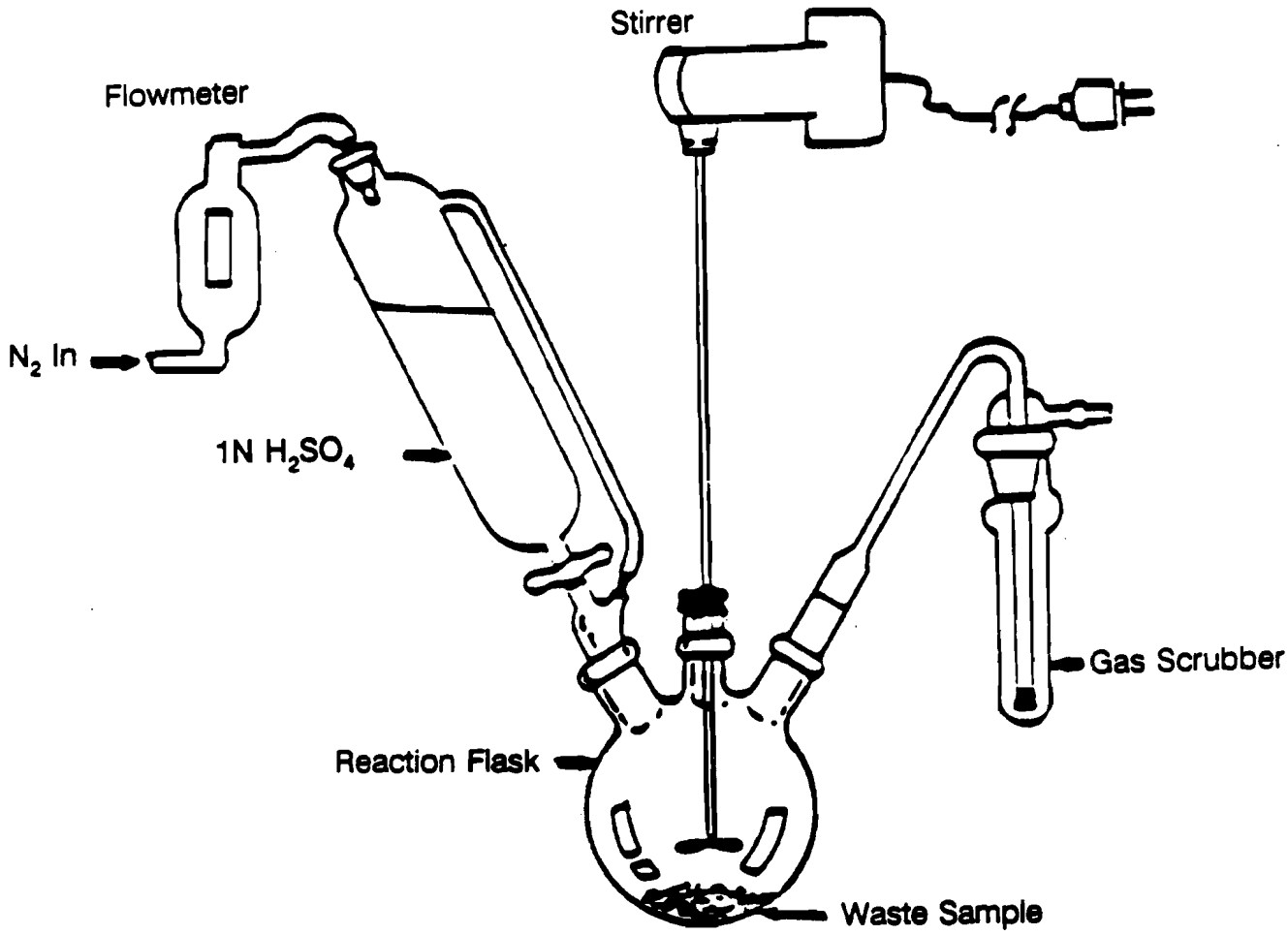

7.4 TOXICITY CHARACTERISTIC LEACHING PROCEDURE

7.4.1 Introduction

The Toxicity Characteristic Leaching Procedure (TCLP) is designed to simulate the leaching a waste will undergo if disposed of in a sanitary landfill. This test is designed to simulate leaching that takes place in a sanitary landfill only. The extraction fluid employed is a function of the alkalinity of the solid phase of the waste. A subsample of a waste is extracted with the appropriate buffered acetic acid solution for 18 $\pm$ 2 hours. The extract obtained from the TCLP (the "TCLP extract") is then analyzed to determine if any of the thresholds established for the 40 Toxicity Characteristic (TC) constituents (listed in Table 7-1) have been exceeded or if the treatment standards established for the constituents listed in 40 CFR §268.41 have been met for the Land Disposal Restrictions (LDR) program. If the TCLP extract contains any one of the TC constituents in an amount equal to or exceeding the concentrations specified in 40 CFR §261.24, the waste possesses the characteristic of toxicity and is a hazardous waste. If the TCLP extract contains LDR constituents in an amount exceeding the concentrations specified in 40 CFR §268.41, the treatment standard for that waste has not been met, and further treatment is necessary prior to land disposal.

7.4.2 Summary of Procedure

The TCLP consists of five steps (refer to Figure 3):

1. Separation Procedure

For liquid wastes (i.e., those containing less than 0.5% dry solid material), the waste, after filtration through a 0.6 to 0.8 μm glass fiber filter, is defined as the TCLP extract.

For wastes containing greater than or equal to 0.5% solids, the liquid, if any, is separated from the solid phase and stored for later analysis.

2. Particle Size Reduction

Prior to extraction, the solid material must pass through a 9.5-mm (0.375-in.) standard sieve, have a surface area per gram of material equal to or greater than 3.1 cm^2, or, be smaller than 1 cm in its narrowest dimension. If the surface area is smaller or the particle size larger than described above, the solid portion of the waste is prepared for extraction by crushing, cutting, or grinding the waste to the surface area or particle size described above. (Special precautions must be taken if the solids are prepared for organic volatiles extraction.)

3. Extraction of Solid Material

The solid material from Step 2 is extracted for 18 $\pm$ 2 hours with an amount of extraction fluid equal to 20 times the weight of the solid phase. The extraction fluid employed is a function of the alkalinity of the solid

phase of the waste. A special extractor vessel is used when testing for volatile analytes.

4. Final Separation of the Extraction from the Remaining Solid

Following extraction, the liquid extract is separated from the solid phase by filtration through a 0.6 to 0.8 μm glass fiber filter. If compatible, the initial liquid phase of the waste is added to the liquid extract, and these are analyzed together. If incompatible, the liquids are analyzed separately and the results are mathematically combined to yield a volume-weighted average concentration.

5. Testing (Analysis) of TCLP Extract

Inorganic and organic species are identified and quantified using appropriate methods in the 6000, 7000, and 8000 series of methods in this manual or by equivalent methods.

7.4.3 Regulatory Definition

Under the Toxicity Characteristic, a solid waste exhibits the characteristic of toxicity if the TCLP extract from a subsample of the waste contains any of the contaminants listed in Table 7-1 at a concentration greater than or equal to the respective value given in that table. If a waste contains <0.5% filterable solids, the waste itself, after filtering, is considered to be the extract for the purposes of analysis.

Under the Land Disposal Restrictions program, a restricted waste identified in 40 CFR §268.41 may be land disposed only if a TCLP extract of the waste or a TCLP extract of the treatment residue of the waste does not exceed the values shown in Table CCWE of 40 CFR §268.41 for any hazardous constituent listed in Table CCWE for that waste. If a waste contains <0.5% filterable solids, the waste itself, after filtering, is considered to be the extract for the purposes of analysis.

TABLE 7-1.

MAXIMUM CONCENTRATION OF CONTAMINANTS FOR TOXICITY CHARACTERISTIC

Contaminant	Regulatory Level (mg/L)
Arsenic	5.0
Barium	100.0
Benzene	0.5
Cadmium	1.0
Carbon tetrachloride	0.5
Chlordane	0.03
Chlorobenzene	100.0
Chloroform	6.0
Chromium	5.0
o-Cresol	200.0[1]
m-Cresol	200.0[1]
p-Cresol	200.0[1]
Cresol	200.0[1]
2,4-D	10.0
1,4-Dichlorobenzene	7.5
1,2-Dichloroethane	0.5
1,1-Dichloroethylene	0.7
2,4-Dinitrotoluene	0.13[2]
Endrin	0.02
Heptachlor (and its hydroxide)	0.008
Hexachlorobenzene	0.13[2]
Hexachloro-1,3-butadiene	0.5
Hexachloroethane	3.0
Lead	5.0
Lindane	0.4
Mercury	0.2
Methoxychlor	10.0
Methyl ethyl ketone	200.0
Nitrobenzene	2.0
Pentachlorophenol	100.0
Pyridine	5.0[2]
Selenium	1.0
Silver	5.0
Tetrachloroethylene	0.7
Toxaphene	0.5

(continued)

Table 7-1
(continued)

Contaminant	Regulatory Level (mg/L)
Trichloroethylene	0.5
2,4,5-Trichlorophenol	400.0
2,4,6-Trichlorophenol	2.0
2,4,5-TP (Silvex)	1.0
Vinyl chloride	0.2

[1]If o-, m-, and p-cresol concentrations cannot be differentiated, the total cresol (D026) concentration is used. The regulatory level of total cresol is 200 mg/L.

[2]Quantitation limit is greater than the calculated regulatory level. The quantitation limit therefore becomes the regulatory level.

FIGURE 3.

TOXICITY CHARACTERISTIC LEACHATE PROCEDURE FLOWCHART

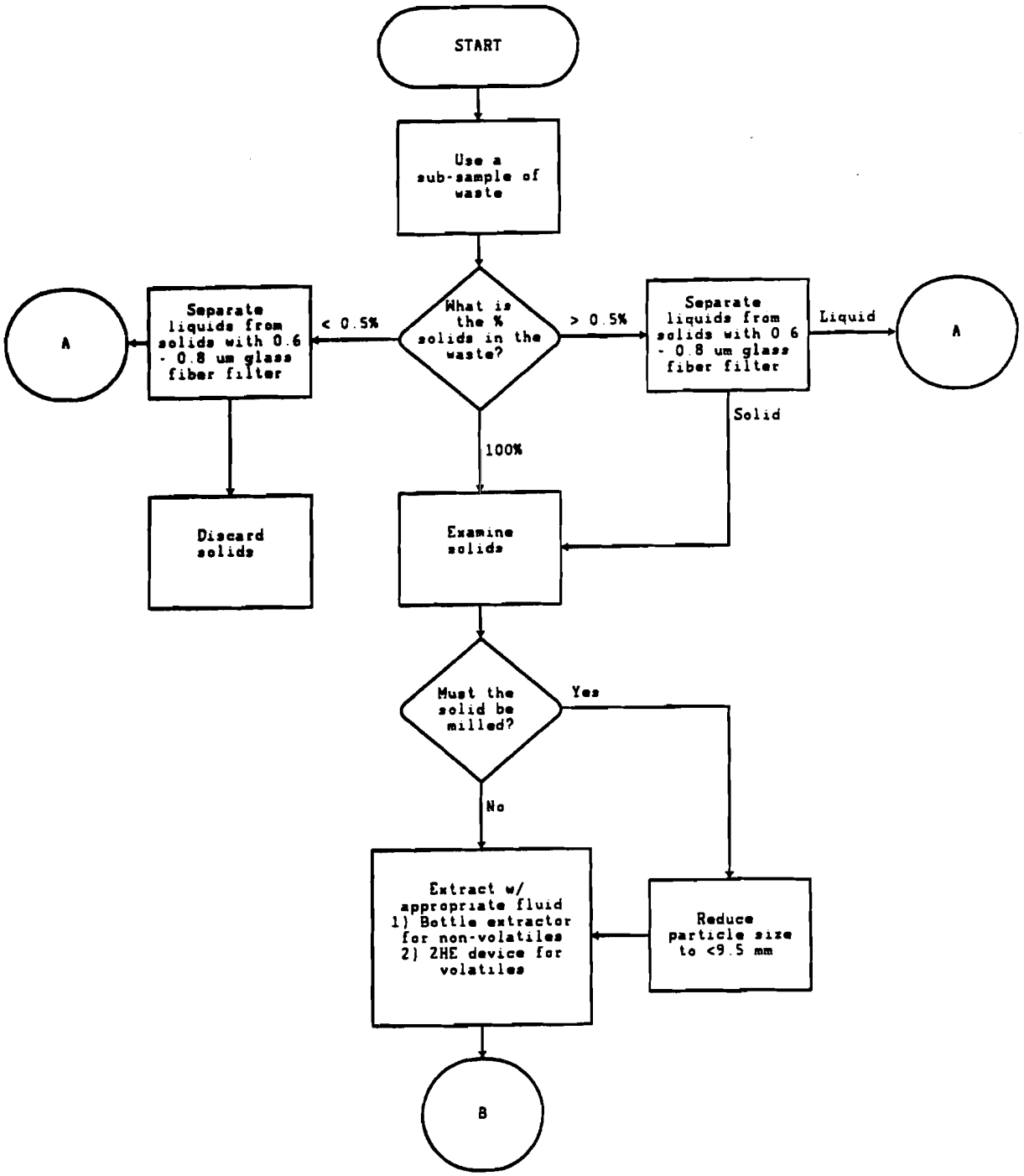

FIGURE 3
(continued)

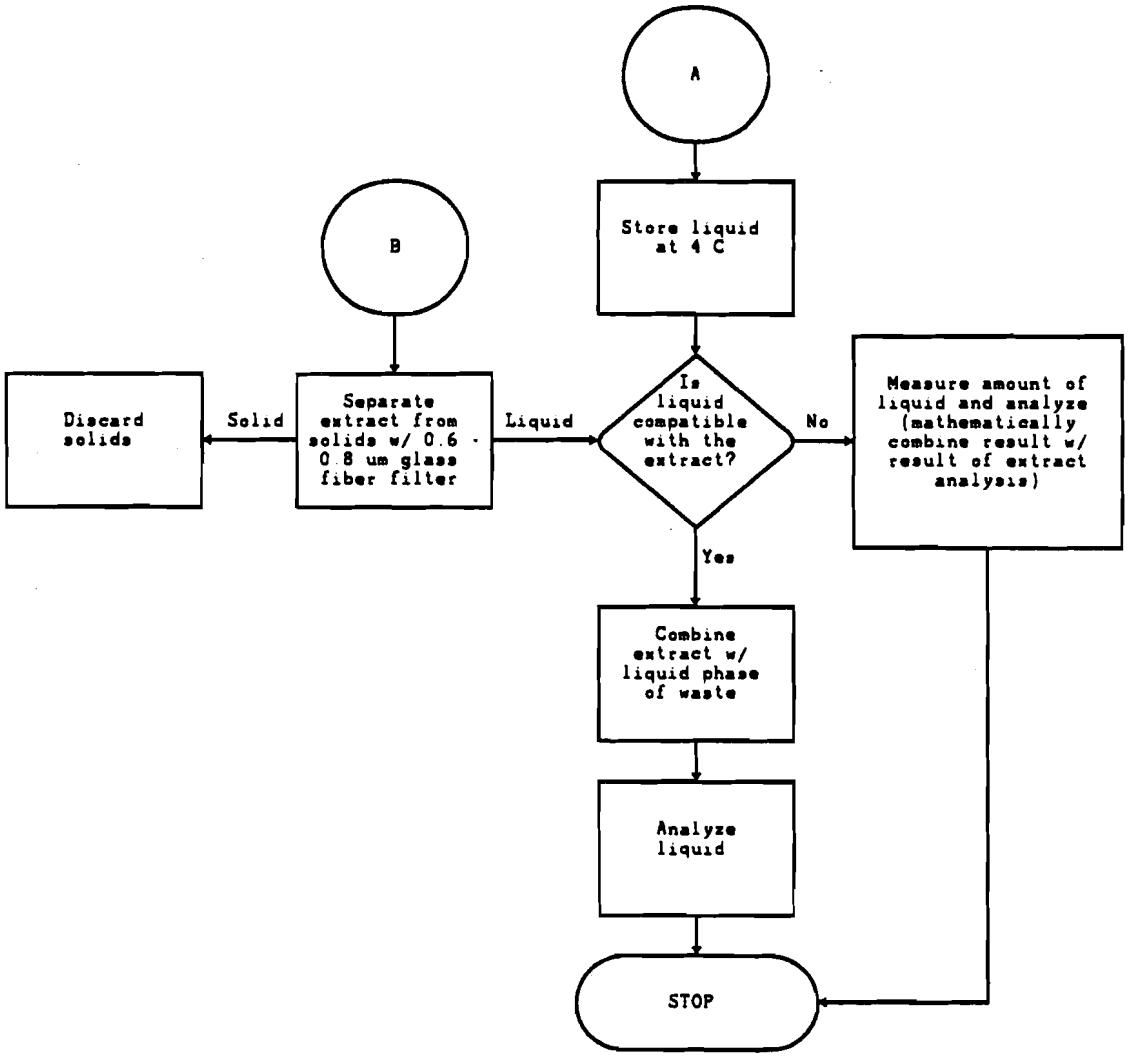

CHAPTER EIGHT

METHODS FOR DETERMINING CHARACTERISTICS

Methods for determining the characterisitics of Ignitability for liquids, Corrosivity for liquids, and Toxicity are included. Guidance for determining Toxic Gas Generation is found in Chapter Seven, Sections 7.3.3 and 7.3.4.

8.1 Ignitability

The following methods are found in Section 8.1:

Method 1010:	Pensky-Martens Closed-Cup Method for Determining Ignitability
Method 1020A:	Setaflash Closed-Cup Method for Determining Ignitability

METHOD 1010

PENSKY-MARTENS CLOSED-CUP METHOD FOR DETERMINING IGNITABILITY

1.0 SCOPE AND APPLICATION

1.1 Method 1010 uses the Pensky-Martens closed-cup tester to determine the flash point of liquids including those that tend to form a surface film under test conditions. Liquids containing non-filterable, suspended solids shall also be tested using this method.

2.0 SUMMARY OF METHOD

2.1 The sample is heated at a slow, constant rate with continual stirring. A small flame is directed into the cup at regular intervals with simultaneous interruption of stirring. The flash point is the lowest temperature at which application of the test flame ignites the vapor above the sample.

For further information on how to conduct a test by this method, see Reference 1 below.

3.0 METHOD PERFORMANCE

3.1 The Pensky-Martens and Setaflash Closed Testers were evaluated using five industrial waste mixtures and p-xylene. The results of this study are shown below in °F along with other data.

Sample	Pensky-Martens	Setaflash
1[2]	143.7 ± 1.5	139.3 ± 2.1
2[2]	144.7 ± 4.5	129.7 ± 0.6
3[2]	93.7 ± 1.5	97.7 ± 1.2
4[2]	198.0 ± 4.0	185.3 ± 0.6
5[2]	119.3 ± 3.1	122.7 ± 2.5
p-xylene[2]	81.3 ± 1.1	79.3 ± 0.6
p-xylene[3]	77.7 ± 0.5[a]	--
Tanker oil	125, 135	--
Tanker oil	180, 180	--
Tanker oil	110, 110	--
DIBK/xylene	102 ± 4[b]	107

[b]75/25 v/v analyzed by four laboratories.
[a]12 determinations over five-day period.

Revision 0
Date September 1986

4.0 REFERENCES

1. D 93-80, Test Methods for Flash Point by Pensky-Martens Closed Tester, American Society for Testing and Materials, 1916 Race Street, Philadelphia, PA 19103, 04.09, 1986.

2. Umana, M., Gutknecht, W., Salmons, C., et al., Evaluation of Ignitability Methods (Liquids), EPA/600/S4-85/053, 1985.

3. Gaskill, A., Compilation and Evaluation of RCRA Method Performance Data, Work Assignment No. 2, EPA Contract No. 68-01-7075, September 1986.

METHOD 1020A

SETAFLASH CLOSED-CUP METHOD FOR DETERMINING IGNITABILITY

1.0 SCOPE AND APPLICATION

1.1 Method 1020 makes use of the Setaflash Closed Tester to determine the flash point of liquids that have flash points between 0° and 110°C (32° and 230°F) and viscosities lower than 150 stokes at 25°C (77°F).

1.2 The procedure may be used to determine whether a material will or will not flash at a specified temperature or to determine the finite temperature at which a material will flash.

1.3 Liquids that tend to form surface films under test conditions or those that contain non-filterable suspended solids shall be tested for ignitability using Method 1010 (Pensky-Martens Closed-Cup).

2.0 SUMMARY OF METHOD

2.1 By means of a syringe, 2-mL of sample is introduced through a leak-proof entry port into the tightly closed Setaflash Tester or directly into the cup which has been brought to within 3°C (5°F) below the expected flash point.

2.2 As a flash/no-flash test, the expected flash-point temperature may be a specification (e.g., 60°C). For specification testing, the temperature of the apparatus is raised to the precise temperature of the specification flash point by slight adjustment of the temperature dial. After 1 minute, a test flame is applied inside the cup and note is taken as to whether the test sample flashes or not. If a repeat test is necessary, a fresh sample should be used.

2.3 For a finite flash management, the temperature is sequentially increased through the anticipated range, the test flame being applied at 5°C (9°F) intervals until a flash is observed. A repeat determination is then made using a fresh sample, starting the test at the temperature of the last interval before the flash point of the material and making tests at increasing 0.5°C (1°F) intervals.

For further information on how to conduct a test with this method, see Reference 1 below.

3.0 METHOD PERFORMANCE

See Method 1010.

4.0 REFERENCES

1. D-3278-78, Test Method for Flash Point of Liquids by Setaflash Closed Tester, American Society for Testing and Materials, 1916 Race Street, Philadelphia, PA 19103.

2. Umana, M., Gutknecht, W., Salmons, C., et al., Evaluation of Ignitability Methods (Liquids), EPA/600/S4-85/053, 1985.

3. Gaskill, A., Compilation and Evaluation of RCRA Method Performance Data, Work Assignment No. 2, EPA Contract No. 68-01-7075, September 1986.

8.2 Corrosivity

The following method is found in Section 8.2:

Method 1110: Corrosivity Toward Steel

METHOD 1110

CORROSIVITY TOWARD STEEL

1.0 SCOPE AND APPLICATION

1.1 Method 1110 is used to measure the corrosivity toward steel of both aqueous and nonaqueous liquid wastes.

2.0 SUMMARY OF METHOD

2.1 This test exposes coupons of SAE Type 1020 steel to the liquid waste to be evaluated and, by measuring the degree to which the coupon has been dissolved, determines the corrosivity of the waste.

3.0 INTERFERENCES

3.1 In laboratory tests, such as this one, corrosion of duplicate coupons is usually reproducible to within 10%. However, large differences in corrosion rates may occasionally occur under conditions where the metal surfaces become passivated. Therefore, at least duplicate determinations of corrosion rate should be made.

4.0 APPARATUS AND MATERIALS

4.1 An apparatus should be used, consisting of a kettle or flask of suitable size (usually 500 to 5,000 mL), a reflux condenser, a thermowell and temperature regulating device, a heating device (mantle, hot plate, or bath), and a specimen support system. A typical resin flask set up for this type of test is shown in Figure 1.

4.2 The supporting device and container shall be constructed of materials that are not affected by, or cause contamination of, the waste under test.

4.3 The method of supporting the coupons will vary with the apparatus used for conducting the test, but it should be designed to insulate the coupons from each other physically and electrically and to insulate the coupons from any metallic container or other device used in the test. Some common support materials include glass, fluorocarbon, or coated metal.

4.4 The shape and form of the coupon support should ensure free contact with the waste.

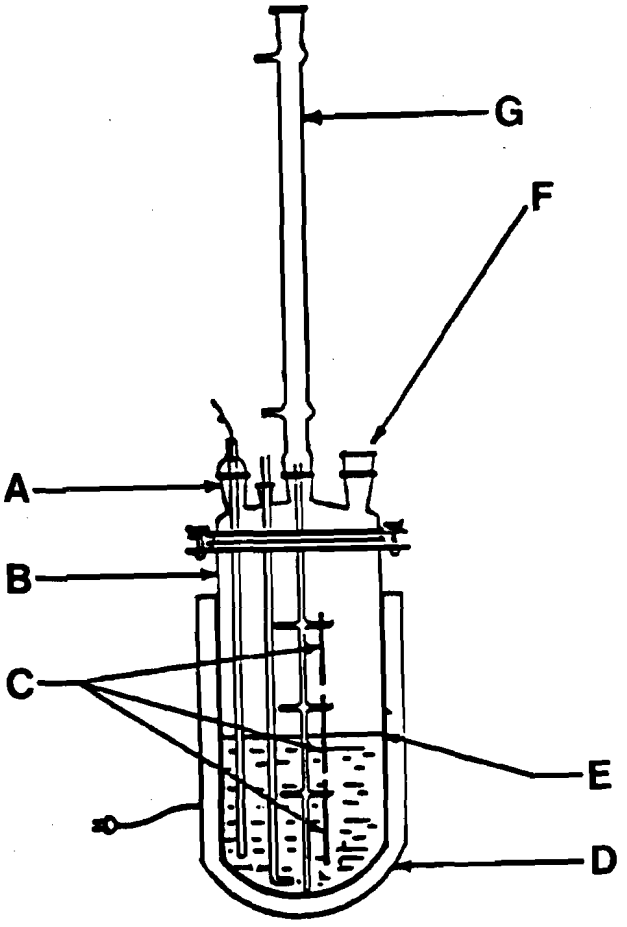

Figure 1. Typical resin flask that can be used as a versatile and convenient apparatus to conduct simple immersion tests. Configuration of the flask top is such that more sophisticated apparatus can be added as required by the specific test being conducted. A = thermowell, B = resin flask, C = specimens hung on supporting device, D = heating mantle, E = liquid interface, F = opening in flask for additional apparatus that may be required, and G = reflux condenser.

4.5 A circular specimen of SAE 1020 steel of about 3.75 cm (1.5 in.) diameter is a convenient shape for a coupon. With a thickness of approximately 0.32 cm (0.125 in.) and a 0.80-cm (0.4-in.)-diameter hole for mounting, these specimens will readily pass through a 45/50 ground-glass joint of a distillation kettle. The total surface area of a circular specimen is given by the following equation:

$$A = 3.14/2(D^2-d^2) + (t)(3.14)(D) + (t)(3.14)(d)$$

where:

t = thickness.
D = diameter of the specimen.
d = diameter of the mounting hole.

If the hole is completely covered by the mounting support, the last term in the equation, (t)(3.14)(d), is omitted.

4.5.1 All coupons should be measured carefully to permit accurate calculation of the exposed areas. An area calculation accurate to ±1% is usually adequate.

4.5.2 More uniform results may be expected if a substantial layer of metal is removed from the coupons prior to testing the corrosivity of the waste. This can be accomplished by chemical treatment (pickling), by electrolytic removal, or by grinding with a coarse abrasive. At least 0.254 mm (0.0001 in.) or 2-3 mg/cm^2 should be removed. Final surface treatment should include finishing with #120 abrasive paper or cloth. Final cleaning consists of scrubbing with bleach-free scouring powder, followed by rinsing in distilled water and then in acetone or methanol, and finally by air-drying. After final cleaning, the coupon should be stored in a desiccator until used.

4.5.3 The minimum ratio of volume of waste to area of the metal coupon to be used in this test is 40 mL/cm^2.

5.0 REAGENTS

5.1 Sodium hydroxide (NaOH), (20%): Dissolves 200 g NaOH in 800 mL Type II water and mix well.

5.2 Zinc dust.

5.3 Hydrochloric acid (HCl): Concentrated.

5.4 Stannous chloride ($SnCl_2$).

5.5 Antimony chloride ($SbCl_3$).

6.0 SAMPLE COLLECTION, PRESERVATION, AND HANDLING

6.1 All samples should be collected using a sampling plan that addresses the considerations discussed in Chapter Nine of this manual.

7.0 PROCEDURE

7.1 Assemble the test apparatus as described in Paragraph 4.0, above.

7.2 Fill the container with the appropriate amount of waste.

7.3 Begin agitation at a rate sufficient to ensure that the liquid is kept well mixed and homogeneous.

7.4 Using the heating device, bring the temperature of the waste to 55°C (130°F).

7.5 An accurate rate of corrosion is not required; only a determination as to whether the rate of corrosion is less than or greater than 6.35 mm per year is required. A 24-hr test period should be ample to determine whether or not the rate of corrosion is >6.35 mm per year.

7.6 In order to determine accurately the amount of material lost to corrosion, the coupons have to be cleaned after immersion and prior to weighing. The cleaning procedure should remove all products of corrosion while removing a minimum of sound metal. Cleaning methods can be divided into three general categories: mechanical, chemical, and electrolytic.

7.6.1 Mechanical cleaning includes scrubbing, scraping, brushing, and ultrasonic procedures. Scrubbing with a bristle brush and mild abrasive is the most popular of these methods. The others are used in cases of heavy corrosion as a first step in removing heavily encrusted corrosion products prior to scrubbing. Care should be taken to avoid removing sound metal.

7.6.2 Chemical cleaning implies the removal of material from the surface of the coupon by dissolution in an appropriate solvent. Solvents such as acetone, dichloromethane, and alcohol are used to remove oil, grease, or resinous materials and are used prior to immersion to remove the products of corrosion. Solutions suitable for removing corrosion from the steel coupon are:

Solution	Soaking Time	Temperature
20% NaOH + 200 g/L zinc dust	5 min	Boiling
or		
Conc. HCl + 50 g/L $SnCl_2$ + 20 g/L $SbCl_3$	Until clean	Cold

7.6.3 Electrolytic cleaning should be preceded by scrubbing to remove loosely adhering corrosion products. One method of electrolytic cleaning that can be employed uses:

Solution:	50 g/L H_2SO_4
Anode:	Carbon or lead
Cathode:	Steel coupon
Cathode current density:	20 amp/cm^2 (129 amp/in.^{2})
Inhibitor:	2 cc organic inhibitor/liter
Temperature:	74°C (165°F)
Exposure Period:	3 min.

NOTE: Precautions must be taken to ensure good electrical contact with the coupon to avoid contamination of the cleaning solution with easily reducible metal ions and to ensure that inhibitor decomposition has not occurred. Instead of a proprietary inhibitor, 0.5 g/L of either diorthotolyl thiourea or quinolin ethiodide can be used.

7.7 Whatever treatment is employed to clean the coupons, its effect in removing sound metal should be determined by using a blank (i.e., a coupon that has not been exposed to the waste). The blank should be cleaned along with the test coupon and its waste loss subtracted from that calculated for the test coupons.

7.8 After corroded specimens have been cleaned and dried, they are reweighed. The weight loss is employed as the principal measure of corrosion. Use of weight loss as a measure of corrosion requires making the assumption that all weight loss has been due to generalized corrosion and not localized pitting. In order to determine the corrosion rate for the purpose of this regulation, the following formula is used:

$$\text{Corrosion Rate (mmpy)} = \frac{\text{weight loss} \times 11.145}{\text{area} \times \text{time}}$$

where: weight loss is in milligrams,
area in square centimeters,
time in hours, and
corrosion rate in millimeters per year (mmpy).

8.0 QUALITY CONTROL

8.1 All quality control data should be filed and available for auditing.

8.2 Duplicate samples should be analyzed on a routine basis.

9.0 METHOD PERFORMANCE

9.1 No data provided.

10.0 REFERENCES

1. National Association of Corrosion Engineers, "Laboratory Corrosion Testing of Metals for the Process Industries," NACE Standard TM-01-69 (1972 Revision), NACE, 3400 West Loop South, Houston, TX 77027.

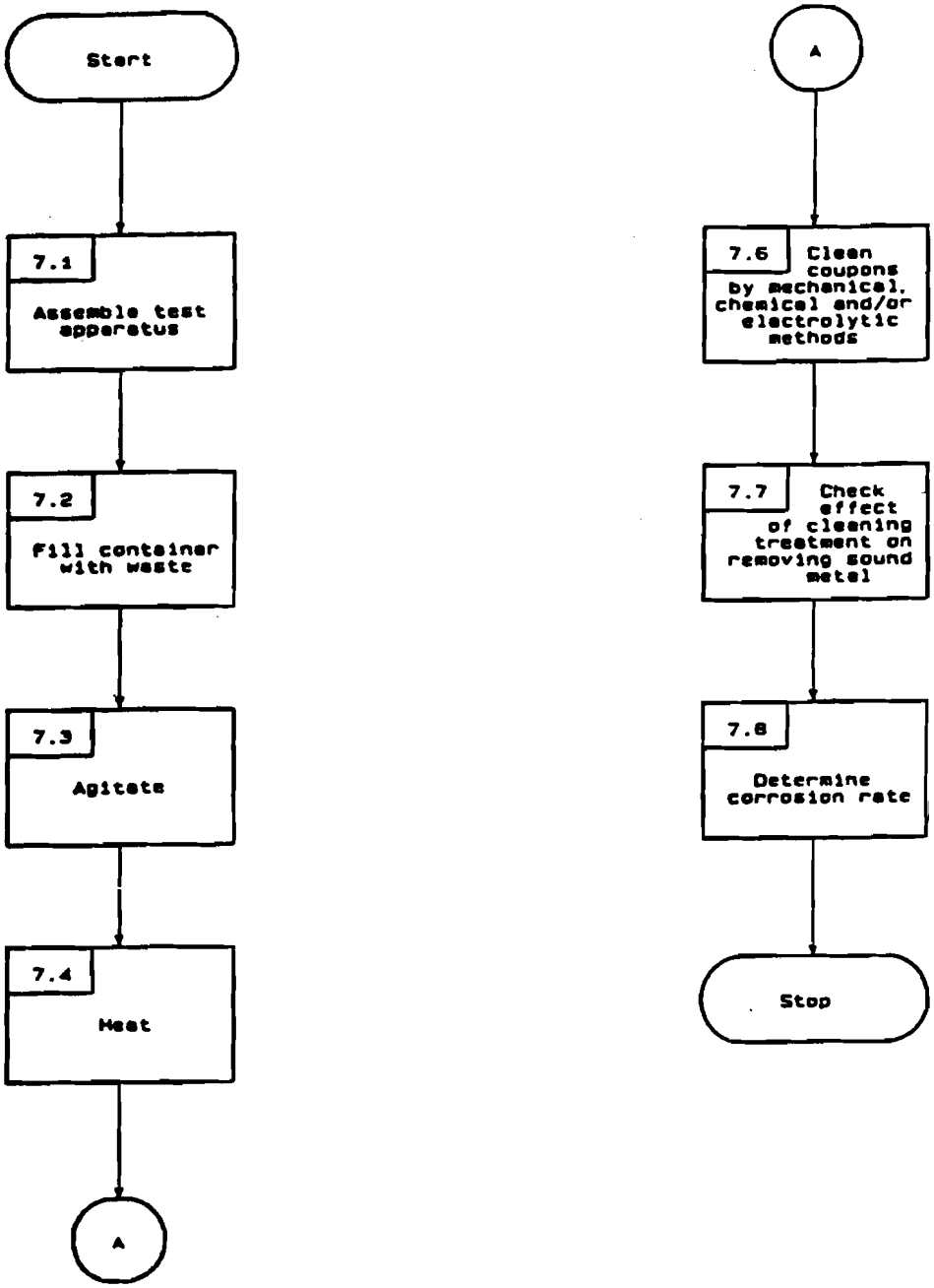
Start
7.1
Assemble test apparatus
7.2
Fill container with waste
7.3
Agitate
7.4
Heat
A
A
7.6
Clean coupons by mechanical, chemical and/or electrolytic methods
7.7
Check effect of cleaning treatment on removing sound metal
7.8
Determine corrosion rate
Stop

8.3 Reactivity

Refer to guidance given in Chapter Seven, especially Section 7.3.3 and 7.3.4.

8.4 Toxicity

The following methods are found in Section 8.4:

Method 1310A:	Extraction Procedure (EP) Toxicity Test Method and Structural Integrity Test
Method 1311:	Toxicity Characteristic Leaching Procedure

*U.S. G.P.O.;1995-386-824:33251

METHOD 1310A

EXTRACTION PROCEDURE (EP) TOXICITY TEST METHOD AND STRUCTURAL INTEGRITY TEST

1.0 SCOPE AND APPLICATION

1.1 This method is an interim method to determine whether a waste exhibits the characteristic of Extraction Procedure Toxicity.

1.2 The procedure may also be used to simulate the leaching which a waste may undergo if disposed of in a sanitary landfill. Method 1310 is applicable to liquid, solid, and multiphase samples.

2.0 SUMMARY OF METHOD

2.1 If a representative sample of the waste contains > 0.5% solids, the solid phase of the sample is ground to pass a 9.5 mm sieve and extracted with deionized water which is maintained at a pH of 5 $\pm$ 0.2, with acetic acid. Wastes that contain < 0.5% filterable solids are, after filtering, considered to be the EP extract for this method. Monolithic wastes which can be formed into a cylinder 3.3 cm (dia) x 7.1 cm, or from which such a cylinder can be formed which is representative of the waste, may be evaluated using the Structural Integrity Procedure instead of being ground to pass a 9.5-mm sieve.

3.0 INTERFERENCES

3.1 Potential interferences that may be encountered during analysis are discussed in the individual analytical methods.

4.0 APPARATUS AND MATERIALS

4.1 Extractor - For purposes of this test, an acceptable extractor is one that will impart sufficient agitation to the mixture to (1) prevent stratification of the sample and extraction fluid and (2) ensure that all sample surfaces are continuously brought into contact with well-mixed extraction fluid. Examples of suitable extractors are shown in Figures 1-3 of this method and are available from: Associated Designs & Manufacturing Co., Alexandria, Virginia; Glas-Col Apparatus Co., Terre Haute, Indiana; Millipore, Bedford, Massachusetts; and Rexnard, Milwaukee, Wisconsin.

4.2 pH meter or pH controller - Accurate to 0.05 pH units with temperature compensation.

4.3 Filter holder - Capable of supporting a 0.45-μm filter membrane and of withstanding the pressure needed to accomplish separation. Suitable filter holders range from simple vacuum units to relatively complex systems that can exert up to 5.3 kg/cm^3 (75 psi) of pressure. The type of filter holder used depends upon the properties of the mixture to be filtered. Filter holders known to EPA and deemed suitable for use are listed in Table 1.

4.4 Filter membrane - Filter membrane suitable for conducting the required filtration shall be fabricated from a material that (1) is not physically changed by the waste material to be filtered and (2) does not absorb or leach the chemical species for which a waste's EP extract will be analyzed. Table 2 lists filter media known to the agency to be suitable for solid waste testing.

4.4.1 In cases of doubt about physical effects on the filter, contact the filter manufacturer to determine if the membrane or the prefilter is adversely affected by the particular waste. If no information is available, submerge the filter in the waste's liquid phase. A filter that undergoes visible physical change after 48 hours (i.e., curls, dissolves, shrinks, or swells) is unsuitable for use.

4.4.2 To test for absorption or leaching by the filter:

4.4.2.1 Prepare a standard solution of the chemical species of interest.

4.4.2.2 Analyze the standard for its concentration of the chemical species.

4.4.2.3 Filter the standard and reanalyze. If the concentration of the filtrate differs from that of the original standard, then the filter membrane leaches or absorbs one or more of the chemical species and is not usable in this test method.

4.5 Structural integrity tester - A device meeting the specifications shown in Figure 4 and having a 3.18-cm (1.25-in) diameter hammer weighing 0.33 kg (0.73 lb) with a free fall of 15.24 cm (6 in) shall be used. This device is available from Associated Design and Manufacturing Company, Alexandria, VA 22314, as Part No. 125, or it may be fabricated to meet these specifications.

5.0 REAGENTS

5.1 Reagent grade chemicals shall be used in all tests. Unless otherwise indicated, it is intended that all reagents shall conform to the specifications of the Committee on Analytical Reagents of the American Chemical Society, where such specifications are available. Other grades may be used, provided it is first ascertained that the reagent is of sufficiently high purity to permit its use without lessening the accuracy of the determination.

5.2 Reagent water. All references to water in this method refer to reagent water, as defined in Chapter One.

5.3 Acetic acid (0.5N), CH_3COOH. This can be made by diluting concentrated glacial acetic acid (17.5N) by adding 57 mL glacial acetic acid to 1,000 mL of water and diluting to 2 liters. The glacial acetic acid must be of high purity and monitored for impurities.

5.4 Analytical standards should be prepared according to the applicable analytical methods.

6.0 SAMPLE COLLECTION, PRESERVATION, AND HANDLING

6.1 All samples must be collected using a sampling plan that addresses the considerations discussed in Chapter Nine of this manual.

6.2 Preservatives must not be added to samples.

6.3 Samples can be refrigerated if it is determined that refrigeration will not affect the integrity of the sample.

7.0 PROCEDURE

7.1 If the waste does not contain any free liquid, go to Step 7.9. If the sample is liquid or multiphase, continue as follows. Weigh filter membrane and prefilter to ± 0.01 g. Handle membrane and prefilters with blunt curved-tip forceps or vacuum tweezers, or by applying suction with a pipet.

7.2 Assemble filter holder, membranes, and prefilters following the manufacturer's instructions. Place the 0.45-μm membrane on the support screen and add prefilters in ascending order of pore size. Do not prewet filter membrane.

7.3 Weigh out a representative subsample of the waste (100 g minimum).

7.4 Allow slurries to stand, to permit the solid phase to settle. Wastes that settle slowly may be centrifuged prior to filtration.

7.5 Wet the filter with a small portion of the liquid phase from the waste or from the extraction mixture. Transfer the remaining material to the filter holder and apply vacuum or gentle pressure (10-15 psi) until all liquid passes through the filter. Stop filtration when air or pressurizing gas moves through the membrane. If this point is not reached under vacuum or gentle pressure, slowly increase the pressure in 10-psi increments to 75 psi. Halt filtration when liquid flow stops. This liquid will constitute part or all of the extract (refer to Step 7.16). The liquid should be refrigerated until time of analysis.

NOTE: Oil samples or samples containing oil are treated in exactly the same way as any other sample. The liquid portion of the sample is filtered and treated as part of the EP extract. If the liquid portion of the sample will not pass through the filter (usually the case with heavy oils or greases), it should be carried through the EP extraction as a solid.

7.6 Remove the solid phase and filter media and, while not allowing them to dry, weigh to ± 0.01 g. The wet weight of the residue is determined by calculating the weight difference between the weight of the filters (Step 7.1) and the weight of the solid phase and the filter media.

7.7 The waste will be handled differently from this point on, depending on whether it contains more or less than 0.5% solids. If the sample appears to have < 0.5% solids, determine the percent solids exactly (see Note below) by the following procedure:

7.7.1 Dry the filter and residue at 80°C until two successive weighings yield the same value.

7.7.2 Calculate the percent solids, using the following equation:

$$\frac{\text{weight of filtered solid and filters} - \text{tared weight of filters}}{\text{initial weight of waste material}} \times 100 = \%\ \text{solids}$$

NOTE: This procedure is used only to determine whether the solid must be extracted or whether it can be discarded unextracted. It is not used in calculating the amount of water or acid to use in the extraction step. Do not extract solid material that has been dried at 80°C. A new sample will have to be used for extraction if a percent solids determination is performed.

7.8 If the solid constitutes < 0.5% of the waste, discard the solid and proceed immediately to Step 7.17, treating the liquid phase as the extract.

7.9 The solid material obtained from Step 7.5 and all materials that do not contain free liquids shall be evaluated for particle size. If the solid material has a surface area per g of material $\geq 3.1\ cm^2$ or passes through a 9.5-mm (0.375-in.) standard sieve, the operator shall proceed to Step 7.11. If the surface area is smaller or the particle size larger than specified above, the solid material shall be prepared for extraction by crushing, cutting, or grinding the material so that it passes through a 9.5-mm (0.375-in.) sieve or, if the material is in a single piece, by subjecting the material to the "Structural Integrity Procedure" described in Step 7.10.

7.10 Structural Integrity Procedure (SIP)

7.10.1 Cut a 3.3-cm diameter by 7.1-cm long cylinder from the waste material. If the waste has been treated using a fixation process, the waste may be cast in the form of a cylinder and allowed to cure for 30 days prior to testing.

7.10.2 Place waste into sample holder and assemble the tester. Raise the hammer to its maximum height and drop. Repeat 14 additional times.

7.10.3 Remove solid material from tester and scrape off any particles adhering to sample holder. Weigh the waste to the nearest 0.01 g and transfer it to the extractor.

7.11 If the sample contains > 0.5% solids, use the wet weight of the solid phase (obtained in Step 7.6) to calculate the amount of liquid and acid to employ for extraction by using the following equation:

$$W = W_f - W_t$$

where :

W = Wet weight in g of solid to be charged to extractor.

W_f = Wet weight in g of filtered solids and filter media.

W_t = Weight in g of tared filters.

If the waste does not contain any free liquids, 100 g of the material will be subjected to the extraction procedure.

7.12 Place the appropriate amount of material (refer to Step 7.11) into the extractor and add 16 times its weight with water.

7.13 After the solid material and water are placed in the extractor, the operator shall begin agitation and measure the pH of the solution in the extractor. If the pH is > 5.0, the pH of the solution should be decreased to 5.0 ± 0.2 by slowly adding 0.5N acetic acid. If the pH is ≤ 5.0, no acetic acid should be added. The pH of the solution should be monitored, as described below, during the course of the extraction, and, if the pH rises above 5.2, 0.5N acetic acid should be added to bring the pH down to 5.0 ± 0.2. However, in no event shall the aggregate amount of acid added to the solution exceed 4 mL of acid per g of solid. The mixture should be agitated for 24 hours and maintained at 20-40°C (68-104°F) during this time. It is recommended that the operator monitor and adjust the pH during the course of the extraction with a device such as the Type 45-A pH Controller, manufactured by Chemtrix, Inc., Hillsboro, Oregon 97123, or its equivalent, in conjunction with a metering pump and reservoir of 0.5N acetic acid. If such a system is not available, the following manual procedure shall be employed.

NOTE: Do not add acetic acid too quickly. Lowering the pH to below the target concentration of 5.0 could affect the metal concentrations in the leachate.

7.13.1 A pH meter should be calibrated in accordance with the manufacturer's specifications.

7.13.2 The pH of the solution should be checked, and, if necessary, 0.5 N acetic acid should be manually added to the extractor until the pH reaches 5.0 ± 0.2. The pH of the solution should be adjusted at 15-, 30-, and 60-minute intervals, moving to the next longer interval if the pH does not have to be adjusted > 0.5 pH units.

7.13.3 The adjustment procedure should be continued for at least 6 hours.

7.13.4 If, at the end of the 24-hour extraction period, the pH of the solution is not below 5.2 and the maximum amount of acid (4 mL per g of solids) has not been added, the pH should be adjusted to 5.0 ± 0.2 and the extraction continued for an additional 4 hours, during which the pH should be adjusted at 1-hour intervals.

7.14 At the end of the extraction period, water should be added to the extractor in an amount determined by the following equation:

$$V = (20)(W) - 16(W) - A$$

where:

V = mL water to be added.

W = Weight in g of solid charged to extractor.

A = mL of 0.5N acetic acid added during extraction.

7.15 The material in the extractor should be separated into its component liquid and solid phases in the following manner:

7.15.1 Allow slurries to stand to permit the solid phase to settle (wastes that are slow to settle may be centrifuged prior to filtration) and set up the filter apparatus (refer to Steps 4.3 and 4.4).

7.15.2 Wet the filter with a small portion of the liquid phase from the waste or from the extraction mixture. Transfer the remaining material to the filter holder and apply vacuum or gentle pressure (10-15 psi) until all liquid passes through the filter. Stop filtration when air or pressurizing gas moves through the membrane. If this point is not reached under vacuum or gentle pressure, slowly increase the pressure in 10-psi increments to 75 psi. Halt filtration when liquid flow stops.

7.16 The liquids resulting from Steps 7.5 and 7.15 should be combined. This combined liquid (or waste itself, if it has < 0.5% solids, as noted in Step 7.8) is the extract.

7.17 The extract is then prepared and analyzed using the appropriate analytical methods described in Chapters Three and Four of this manual.

NOTE: If the EP extract includes two phases, concentration of contaminants is determined by using a simple weighted average. For example: An EP extract contains 50 mL of oil and 1,000 mL of an aqueous phase. Contaminant concentrations are determined for each phase. The final contamination concentration is taken to be:

$$\frac{\left(50 \times \text{contaminant conc. in oil}\right) + \left(1{,}000 \times \text{contaminant conc. of aqueous phase}\right)}{1050}$$

NOTE: In cases where a contaminant was not detected, use the MDL in the calculation. For example, if the MDL in the oily phase is 100 mg/L and 1 mg/L in the aqueous phase, the reporting limit would be 6 mg/L (rounded to the nearest mg). If the regulatory threshold is 5 mg/L, the waste may be EP toxic and results of the analysis are inconclusive.

8.0 QUALITY CONTROL

8.1 All quality control data should be maintained and available for easy reference or inspection.

8.2 Employ a minimum of one blank per sample batch to determine if contamination or any memory effects are occurring.

8.3 All quality control measures described in Chapter One and in the referenced analytical methods should be followed.

9.0 METHOD PERFORMANCE

9.1 The data tabulated in Table 3 were obtained from records of state and contractor laboratories and are intended to show the precision of the entire method (1310 plus analysis method).

10.0 REFERENCES

1. Rohrbough, W.G.; et al. Reagent Chemicals, American Chemical Society Specifications, 7th ed.; American Chemical Society: Washington, DC, 1986.

2. 1985 Annual Book of ASTM Standards, Vol. 11.01; "Standard Specification for Reagent Water"; ASTM: Philadelphia, PA, 1985; D1193-77.

3. Gaskill, A., Compilation and Evaluation of RCRA Method Performance Data, Work Assignment No. 2, EPA Contract No. 68-01-7075, September 1986.

TABLE 1. EPA-APPROVED FILTER HOLDERS

Manufacturer	Size	Model No.	Comments
Vacuum Filters			
Gelman	47 mm	4011	
Nalgene	500 mL	44-0045	Disposable plastic unit, including prefilter, filter pads, and reservoir; can be used when solution is to be analyzed for inorganic constituents.
Nuclepore	47 mm	410400	
Millipore	47 mm	XX10 047 00	
Pressure Filters			
Nuclepore	142 mm	425900	
Micro Filtration Systems	142 mm	302300	
Millipore	142 mm	YT30 142 HW	

TABLE 2. EPA-APPROVED FILTRATION MEDIA

Supplier	Filter to be used for aqueous systems	Filter to be used for organic systems
Coarse prefilter		
Gelman	61631, 61635	61631, 61635
Nuclepore	210907, 211707	210907, 211707
Millipore	AP25 035 00, AP25 127 50	AP25 035 00, AP25 127 50
Medium prefilters		
Gelman	61654, 61655	
Nuclepore	210905, 211705	210905, 211705
Millipore	AP20 035 00, AP20 124 50	AP20 035 00, AP20 124 50
Fine prefilters		
Gelman	64798, 64803	64798, 64803
Nuclepore	210903, 211703	210903, 211703
Millipore	AP15 035 00, AP15 124 50	AP15 035 00, AP15 124 50
Fine filters (0.45 μm)		
Gelman	63069, 66536	60540 or 66149, 66151
Pall	NX04750, NX14225	
Nuclepore	142218	142218[a]
Millipore	HAWP 047 00, HAWP 142 50	FHUP 047 00, FHLP 142 50
Selas	83485-02, 83486-02	83485-02, 83486-02

[a]Susceptible to decomposition by certain polar organic solvents.

TABLE 3. PRECISIONS OF EXTRACTION-ANALYSIS PROCEDURES FOR SEVERAL ELEMENTS

Element	Sample Matrix	Analysis Method	Laboratory Replicates
Arsenic	1. Auto fluff	7060	1.8, 1.5 µg/L
	2. Barrel sludge	7060	0.9, 2.6 µg/L
	3. Lumber treatment company sediment	7060	28, 42 mg/L
Barium	1. Lead smelting emission control dust	6010	0.12, 0.12 mg/L
	2. Auto fluff	7081	791, 780 µg/L
	3. Barrel sludge	7081	422, 380 µg/L
Cadmium	1. Lead smelting emission control dust	3010/7130	120, 120 mg/L
	2. Wastewater treatment sludge from electroplating	3010/7130	360, 290 mg/L
	3. Auto fluff	7131	470, 610 µg/L
	4. Barrel sludge	7131	1100, 890 µg/L
	5. Oil refinery tertiary pond sludge	7131	3.2, 1.9 µg/L
Chromium	1. Wastewater treatment sludge from electroplating	3010/7190	1.1, 1.2 mg/L
	2. Paint primer	7191	61, 43 µg/L
	3. Paint primer filter	7191	--
	4. Lumber treatment company sediment	7191	0.81, 0.89 mg/L
	5. Oil refinery tertiary pond sludge	7191	--
Mercury	1. Barrel sludge	7470	0.15, 0.09 µg/L
	2. Wastewater treatment sludge from electroplating	7470	1.4, 0.4 µg/L
	3. Lead smelting emission control dust	7470	0.4, 0.4 µg/L

TABLE 3 (Continued)

Element	Sample Matrix	Analysis Method	Laboratory Replicates
Lead	1. Lead smelting emission control dust	3010/7420	940, 920 mg/L
	2. Auto fluff	7421	1540, 1490 µg/L
	3. Incinerator ash	7421	1000, 974 µg/L
	4. Barrel sludge	7421	2550, 2800 µg/L
	5. Oil refinery tertiary pond sludge	7421	31, 29 µg/L
Nickel	1. Sludge	7521	2260, 1720 µg/L
	2. Wastewater treatment sludge from electroplating	3010/7520	130, 140 mg/L
Chromium(VI)	1. Wastewater treatment sludge from electroplating	7196	18, 19 µg/L

FIGURE 1.
EXTRACTOR

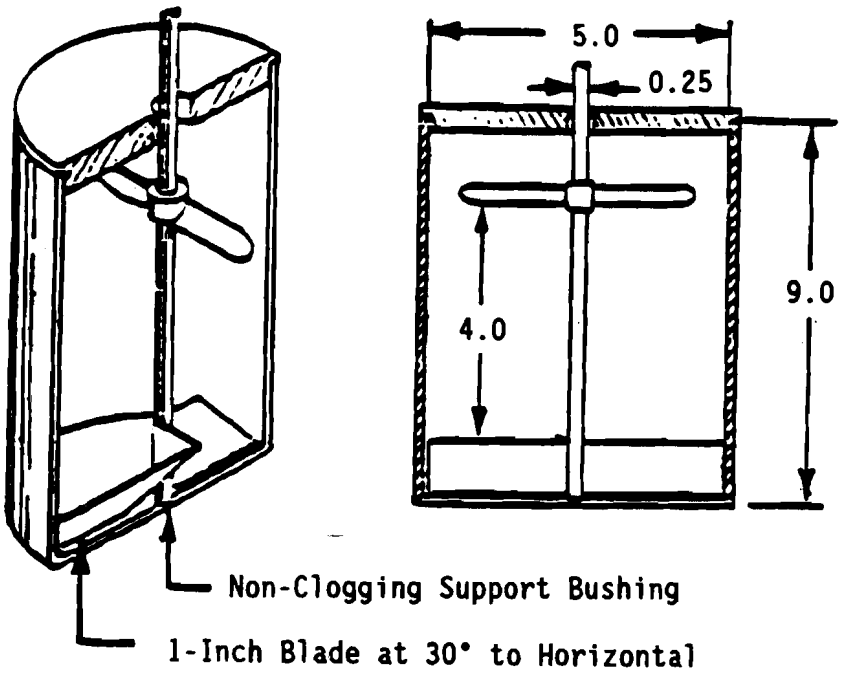

FIGURE 2.
ROTARY EXTRACTOR

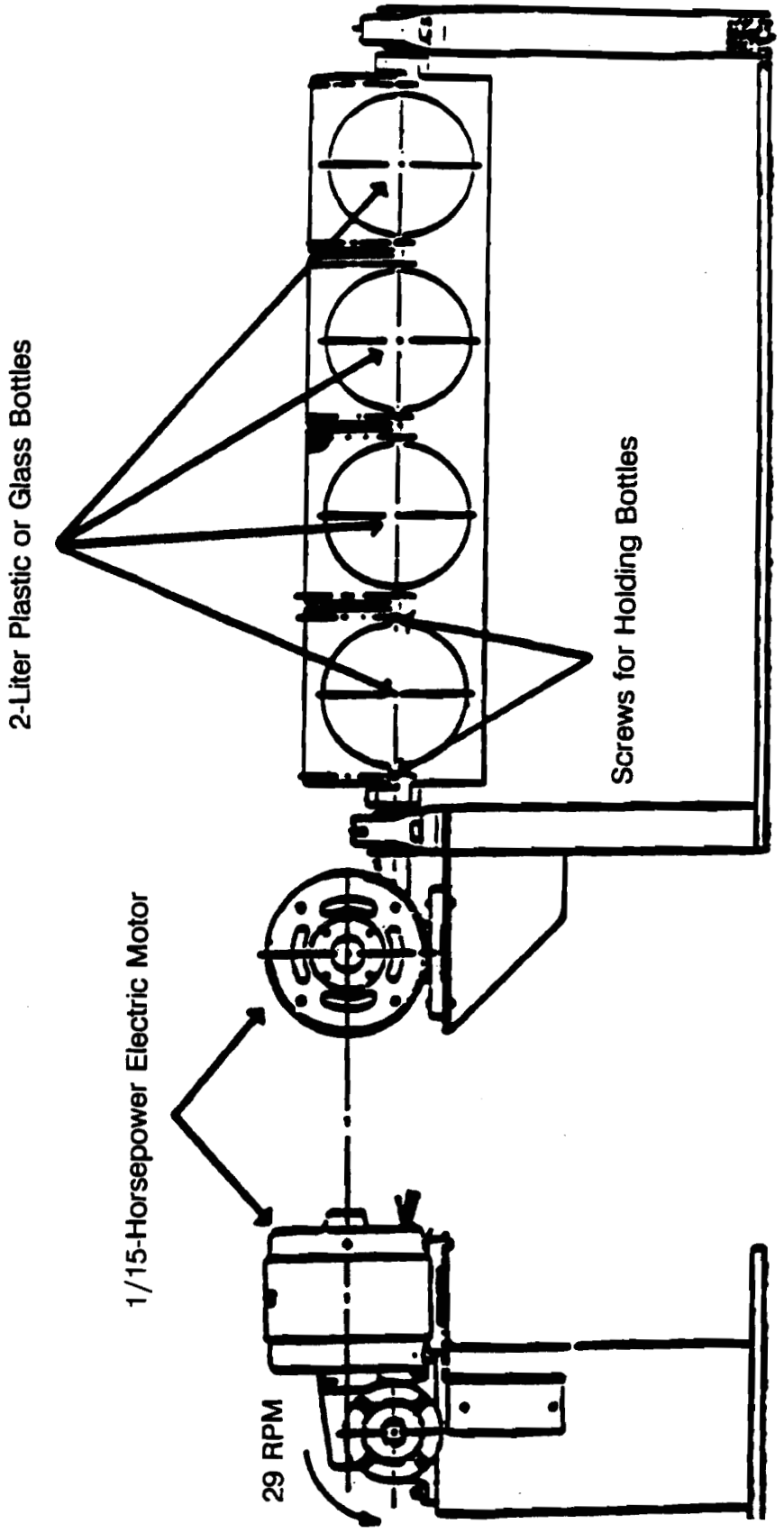

FIGURE 3.
EPRI EXTRACTOR

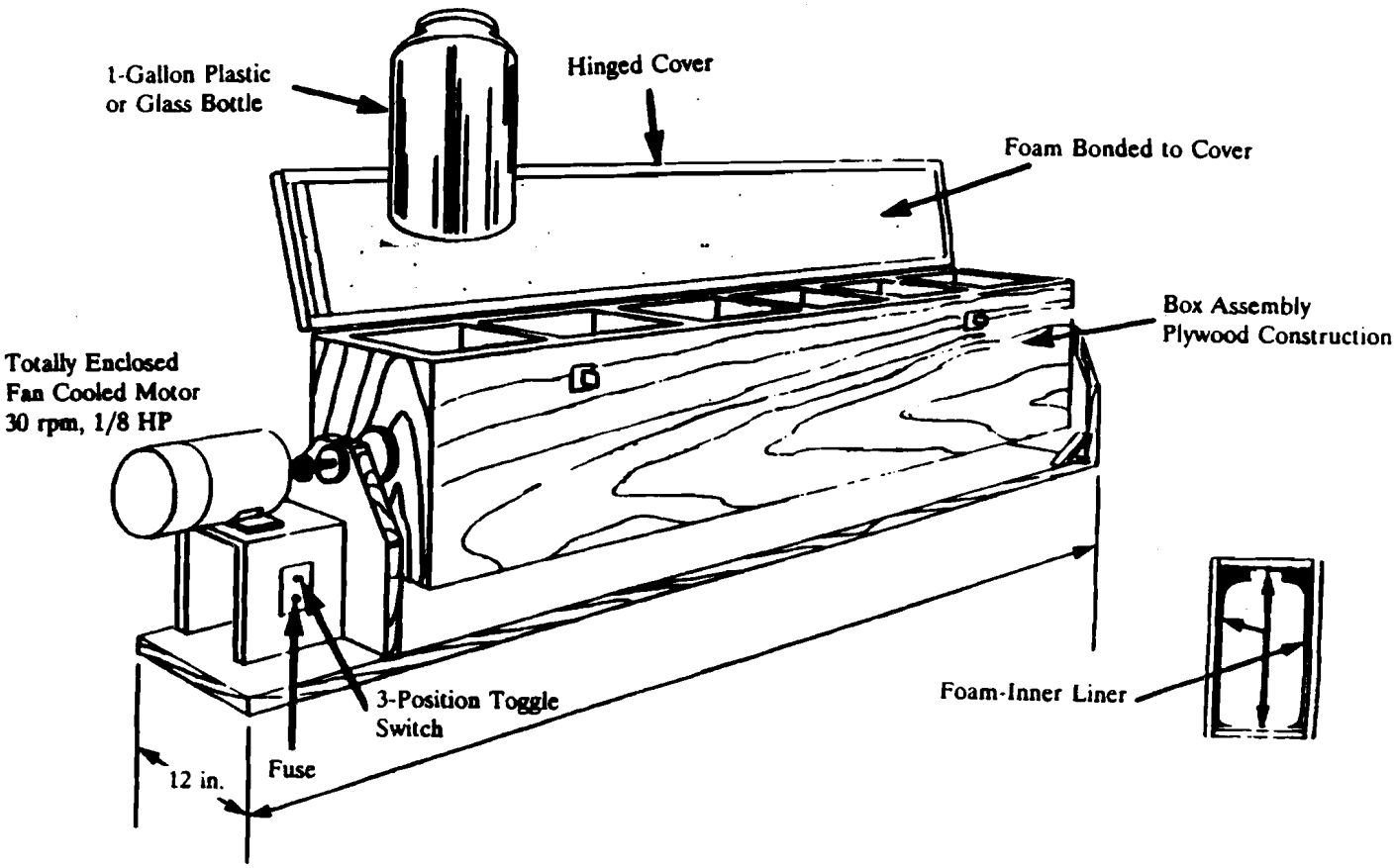

FIGURE 4.
COMPACTION TESTER

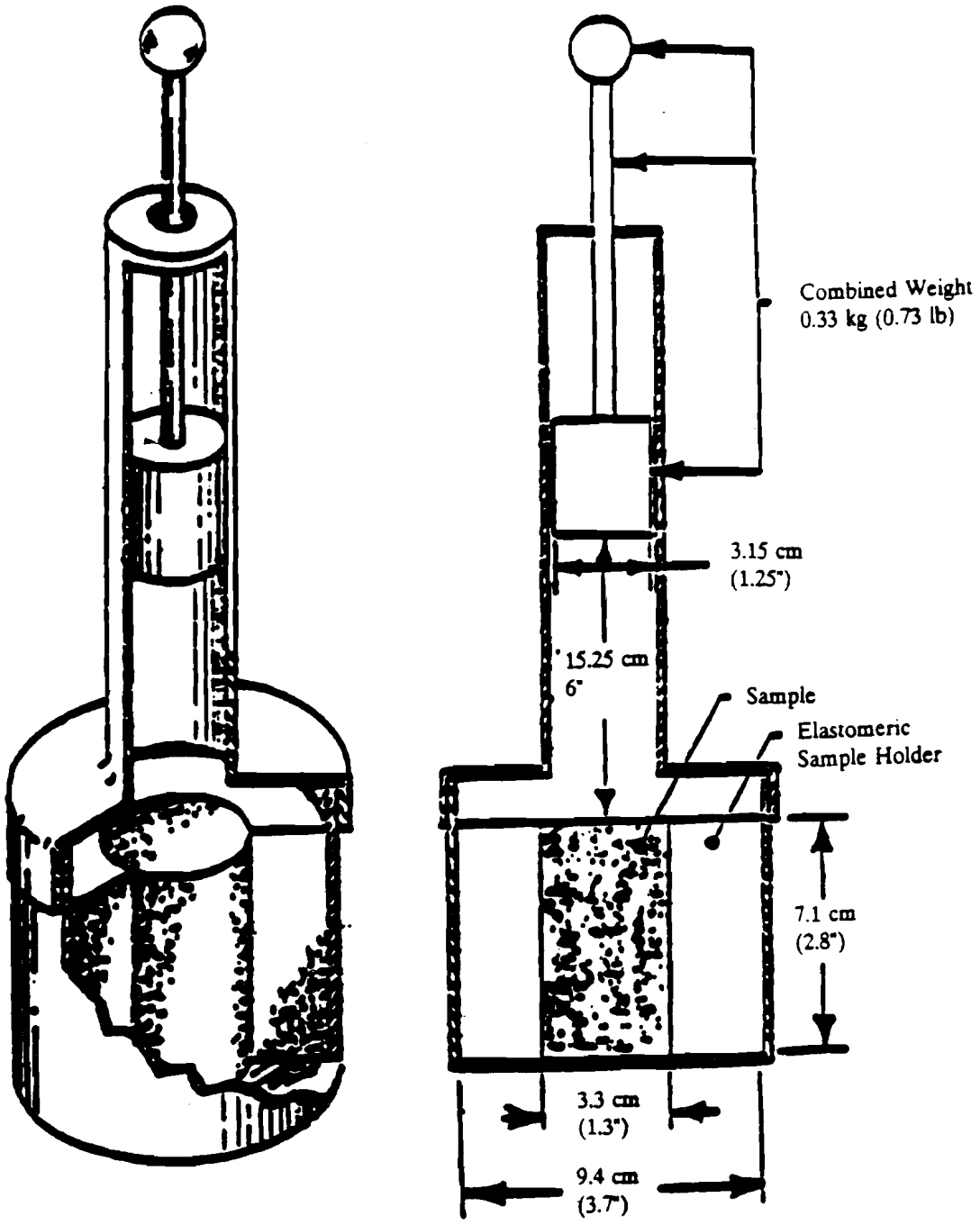

METHOD 1310A
EXTRACTION PROCEDURE (EP) TOXICITY TEST METHOD AND STRUCTURAL INTEGRITY TEST

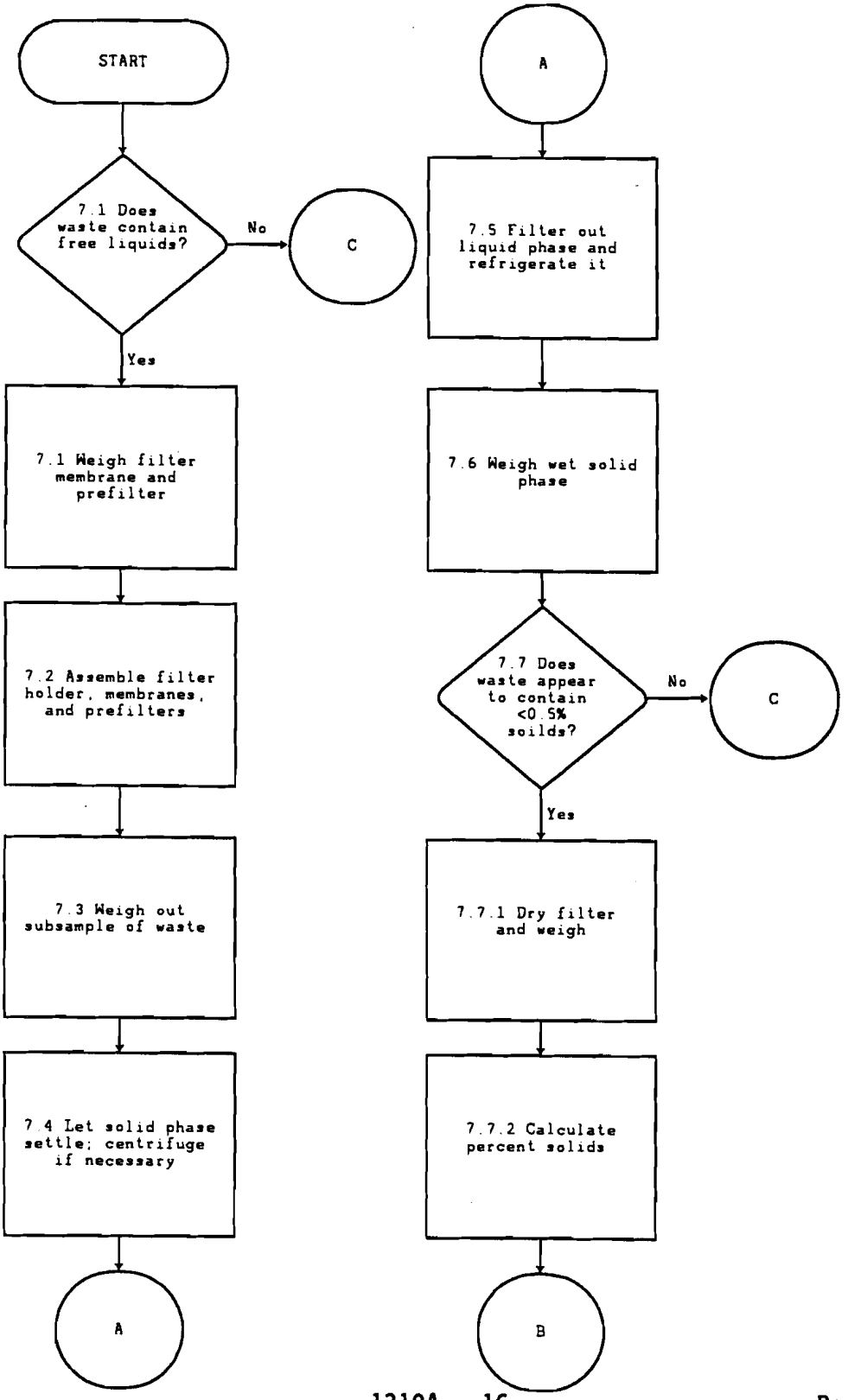

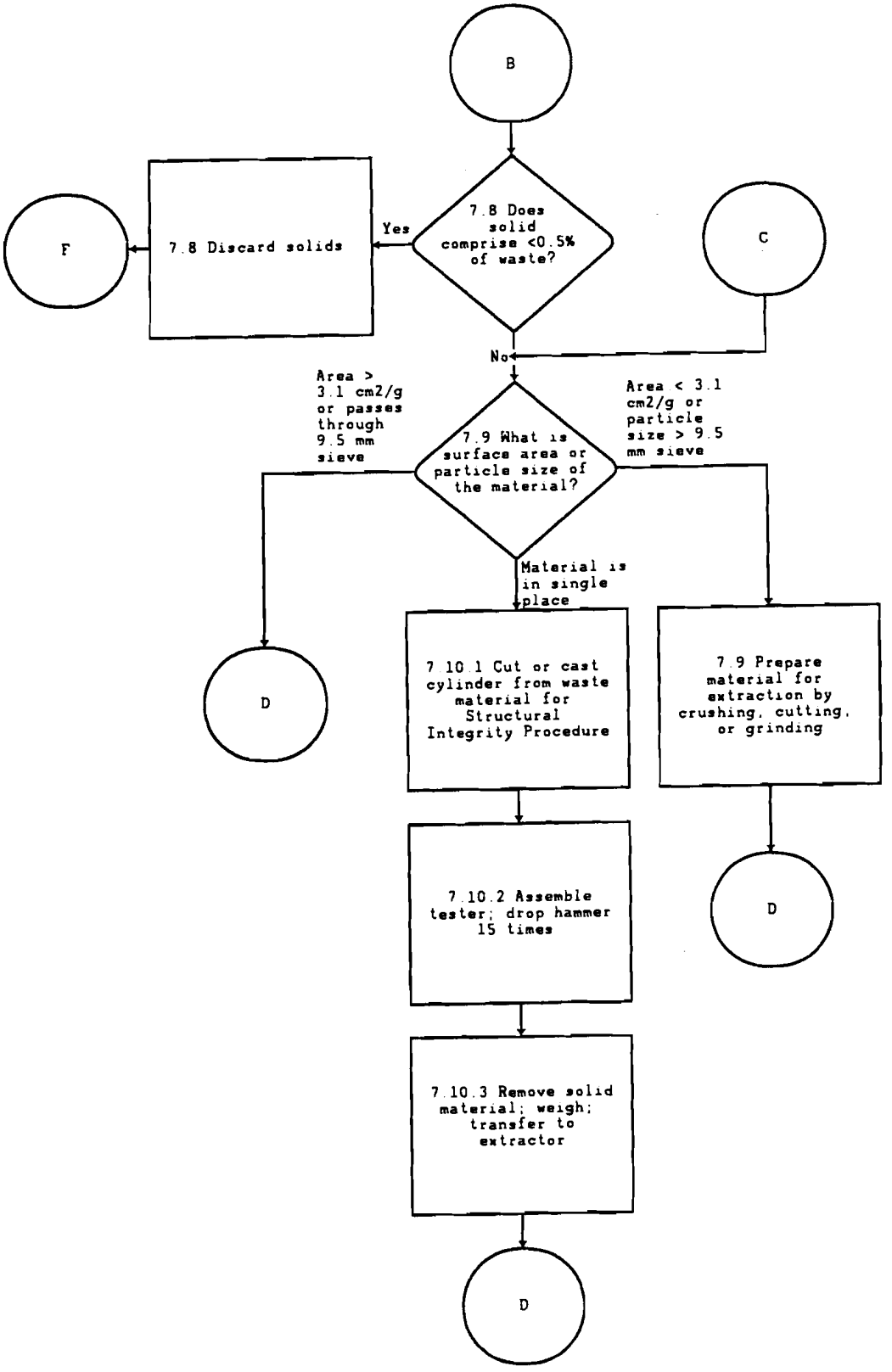
B
7.8 Does solid comprise <0.5% of waste?
Yes
7.8 Discard solids
F
C
No
7.9 What is surface area or particle size of the material?
Area > 3.1 cm2/g or passes through 9.5 mm sieve
Area < 3.1 cm2/g or particle size > 9.5 mm sieve
Material is in single place
D
7.10.1 Cut or cast cylinder from waste material for Structural Integrity Procedure
7.9 Prepare material for extraction by crushing, cutting, or grinding
7.10.2 Assemble tester; drop hammer 15 times
D
7.10.3 Remove solid material; weigh; transfer to extractor
D

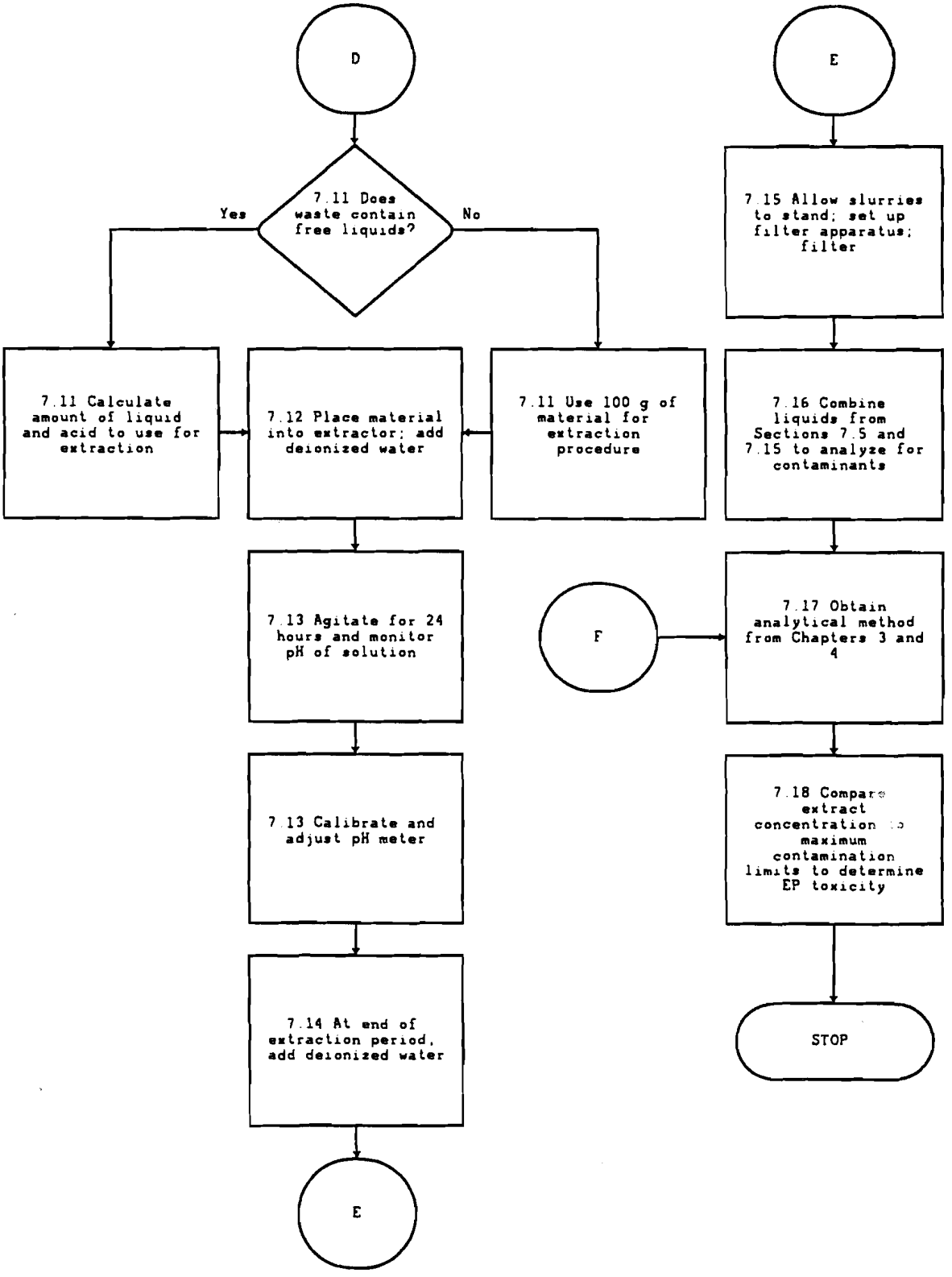
D
7.11 Does waste contain free liquids?
Yes
No
7.11 Calculate amount of liquid and acid to use for extraction
7.12 Place material into extractor; add deionized water
7.11 Use 100 g of material for extraction procedure
7.13 Agitate for 24 hours and monitor pH of solution
7.13 Calibrate and adjust pH meter
7.14 At end of extraction period, add deionized water
E
E
7.15 Allow slurries to stand; set up filter apparatus; filter
7.16 Combine liquids from Sections 7.5 and 7.15 to analyze for contaminants
F
7.17 Obtain analytical method from Chapters 3 and 4
7.18 Compare extract concentration to maximum contamination limits to determine EP toxicity
STOP

METHOD 1311

TOXICITY CHARACTERISTIC LEACHING PROCEDURE

1.0 SCOPE AND APPLICATION

1.1 The TCLP is designed to determine the mobility of both organic and inorganic analytes present in liquid, solid, and multiphasic wastes.

1.2 If a total analysis of the waste demonstrates that individual analytes are not present in the waste, or that they are present but at such low concentrations that the appropriate regulatory levels could not possibly be exceeded, the TCLP need not be run.

1.3 If an analysis of any one of the liquid fractions of the TCLP extract indicates that a regulated compound is present at such high concentrations that, even after accounting for dilution from the other fractions of the extract, the concentration would be above the regulatory level for that compound, then the waste is hazardous and it is not necessary to analyze the remaining fractions of the extract.

1.4 If an analysis of extract obtained using a bottle extractor shows that the concentration of any regulated volatile analyte exceeds the regulatory level for that compound, then the waste is hazardous and extraction using the ZHE is not necessary. However, extract from a bottle extractor cannot be used to demonstrate that the concentration of volatile compounds is below the regulatory level.

2.0 SUMMARY OF METHOD

2.1 For liquid wastes (i.e., those containing less than 0.5% dry solid material), the waste, after filtration through a 0.6 to 0.8 μm glass fiber filter, is defined as the TCLP extract.

2.2 For wastes containing greater than or equal to 0.5% solids, the liquid, if any, is separated from the solid phase and stored for later analysis; the particle size of the solid phase is reduced, if necessary. The solid phase is extracted with an amount of extraction fluid equal to 20 times the weight of the solid phase. The extraction fluid employed is a function of the alkalinity of the solid phase of the waste. A special extractor vessel is used when testing for volatile analytes (see Table 1 for a list of volatile compounds). Following extraction, the liquid extract is separated from the solid phase by filtration through a 0.6 to 0.8 μm glass fiber filter.

2.3 If compatible (i.e., multiple phases will not form on combination), the initial liquid phase of the waste is added to the liquid extract, and these are analyzed together. If incompatible, the liquids are analyzed separately and the results are mathematically combined to yield a volume-weighted average concentration.

3.0 INTERFERENCES

3.1 Potential interferences that may be encountered during analysis are discussed in the individual analytical methods.

4.0 APPARATUS AND MATERIALS

4.1 Agitation apparatus: The agitation apparatus must be capable of rotating the extraction vessel in an end-over-end fashion (see Figure 1) at 30 ± 2 rpm. Suitable devices known to EPA are identified in Table 2.

4.2 Extraction Vessels

4.2.1 Zero-Headspace Extraction Vessel (ZHE). This device is for use only when the waste is being tested for the mobility of volatile analytes (i.e., those listed in Table 1). The ZHE (depicted in Figure 2) allows for liquid/solid separation within the device, and effectively precludes headspace. This type of vessel allows for initial liquid/solid separation, extraction, and final extract filtration without opening the vessel (see Section 4.3.1). The vessels shall have an internal volume of 500-600 mL, and be equipped to accommodate a 90-110 mm filter. The devices contain VITON®[1] O-rings which should be replaced frequently. Suitable ZHE devices known to EPA are identified in Table 3.

For the ZHE to be acceptable for use, the piston within the ZHE should be able to be moved with approximately 15 psi or less. If it takes more pressure to move the piston, the O-rings in the device should be replaced. If this does not solve the problem, the ZHE is unacceptable for TCLP analyses and the manufacturer should be contacted.

The ZHE should be checked for leaks after every extraction. If the device contains a built-in pressure gauge, pressurize the device to 50 psi, allow it to stand unattended for 1 hour, and recheck the pressure. If the device does not have a built-in pressure gauge, pressurize the device to 50 psi, submerge it in water, and check for the presence of air bubbles escaping from any of the fittings. If pressure is lost, check all fittings and inspect and replace O-rings, if necessary. Retest the device. If leakage problems cannot be solved, the manufacturer should be contacted.

Some ZHEs use gas pressure to actuate the ZHE piston, while others use mechanical pressure (see Table 3). Whereas the volatiles procedure (see Section 7.3) refers to pounds per square inch (psi), for the mechanically actuated piston, the pressure applied is measured in torque-inch-pounds. Refer to the manufacturer's instructions as to the proper conversion.

---

[1] VITON® is a trademark of Du Pont.

4.2.2 Bottle Extraction Vessel. When the waste is being evaluated using the nonvolatile extraction, a jar with sufficient capacity to hold the sample and the extraction fluid is needed. Headspace is allowed in this vessel.

The extraction bottles may be constructed from various materials, depending on the analytes to be analyzed and the nature of the waste (see Section 4.3.3). It is recommended that borosilicate glass bottles be used instead of other types of glass, especially when inorganics are of concern. Plastic bottles, other than polytetrafluoroethylene, shall not be used if organics are to be investigated. Bottles are available from a number of laboratory suppliers. When this type of extraction vessel is used, the filtration device discussed in Section 4.3.2 is used for initial liquid/solid separation and final extract filtration.

4.3 Filtration Devices: It is recommended that all filtrations be performed in a hood.

4.3.1 Zero-Headspace Extractor Vessel (ZHE): When the waste is evaluated for volatiles, the zero-headspace extraction vessel described in Section 4.2.1 is used for filtration. The device shall be capable of supporting and keeping in place the glass fiber filter and be able to withstand the pressure needed to accomplish separation (50 psi).

NOTE: When it is suspected that the glass fiber filter has been ruptured, an in-line glass fiber filter may be used to filter the material within the ZHE.

4.3.2 Filter Holder: When the waste is evaluated for other than volatile analytes, any filter holder capable of supporting a glass fiber filter and able to withstand the pressure needed to accomplish separation may be used. Suitable filter holders range from simple vacuum units to relatively complex systems capable of exerting pressures of up to 50 psi or more. The type of filter holder used depends on the properties of the material to be filtered (see Section 4.3.3). These devices shall have a minimum internal volume of 300 mL and be equipped to accommodate a minimum filter size of 47 mm (filter holders having an internal capacity of 1.5 L or greater, and equipped to accommodate a 142 mm diameter filter, are recommended). Vacuum filtration can only be used for wastes with low solids content (<10%) and for highly granular, liquid-containing wastes. All other types of wastes should be filtered using positive pressure filtration. Suitable filter holders known to EPA are shown in Table 4.

4.3.3 Materials of Construction: Extraction vessels and filtration devices shall be made of inert materials which will not leach or absorb waste components. Glass, polytetrafluoroethylene (PTFE), or type 316 stainless steel equipment may be used when evaluating the mobility of both organic and inorganic components. Devices made of high density polyethylene (HDPE), polypropylene (PP), or polyvinyl chloride (PVC) may be used only when evaluating the mobility of metals. Borosilicate glass bottles are recommended for use over other types of glass bottles, especially when inorganics are analytes of concern.

4.4 Filters: Filters shall be made of borosilicate glass fiber, shall contain no binder materials, and shall have an effective pore size of 0.6 to 0.8 μm, or equivalent. Filters known to EPA which meet these specifications are identified in Table 5. Pre-filters must not be used. When evaluating the mobility of metals, filters shall be acid-washed prior to use by rinsing with 1N nitric acid followed by three consecutive rinses with deionized distilled water (a minimum of 1 L per rinse is recommended). Glass fiber filters are fragile and should be handled with care.

4.5 pH Meters: The meter should be accurate to $\pm$ 0.05 units at 25 °C.

4.6 ZHE Extract Collection Devices: TEDLAR®[2] bags or glass, stainless steel or PTFE gas-tight syringes are used to collect the initial liquid phase and the final extract of the waste when using the ZHE device. The devices listed are recommended for use under the following conditions:

4.6.1 If a waste contains an aqueous liquid phase or if a waste does not contain a significant amount of nonaqueous liquid (i.e., <1% of total waste), the TEDLAR® bag or a 600 mL syringe should be used to collect and combine the initial liquid and solid extract.

4.6.2 If a waste contains a significant amount of nonaqueous liquid in the initial liquid phase (i.e., >1% of total waste), the syringe or the TEDLAR® bag may be used for both the initial solid/liquid separation and the final extract filtration. However, analysts should use one or the other, not both.

4.6.3 If the waste contains no initial liquid phase (is 100% solid) or has no significant solid phase (is 100% liquid), either the TEDLAR® bag or the syringe may be used. If the syringe is used, discard the first 5 mL of liquid expressed from the device. The remaining aliquots are used for analysis.

4.7 ZHE Extraction Fluid Transfer Devices: Any device capable of transferring the extraction fluid into the ZHE without changing the nature of the extraction fluid is acceptable (e.g., a positive displacement or peristaltic pump, a gas tight syringe, pressure filtration unit (see Section 4.3.2), or other ZHE device).

4.8 Laboratory Balance: Any laboratory balance accurate to within $\pm$ 0.01 grams may be used (all weight measurements are to be within $\pm$ 0.1 grams).

4.9 Beaker or Erlenmeyer flask, glass, 500 mL.

4.10 Watchglass, appropriate diameter to cover beaker or Erlenmeyer flask.

---

[2] TEDLAR® is a registered trademark of Du Pont.

4.11 Magnetic stirrer.

5.0 REAGENTS

5.1 Reagent grade chemicals shall be used in all tests. Unless otherwise indicated, it is intended that all reagents shall conform to the specifications of the Committee on Analytical Reagents of the American Chemical Society, where such specifications are available. Other grades may be used, provided it is first ascertained that the reagent is of sufficiently high purity to permit its use without lessening the accuracy of the determination.

5.2 Reagent Water. Reagent water is defined as water in which an interferant is not observed at or above the method's detection limit of the analyte(s) of interest. For nonvolatile extractions, ASTM Type II water or equivalent meets the definition of reagent water. For volatile extractions, it is recommended that reagent water be generated by any of the following methods. Reagent water should be monitored periodically for impurities.

5.2.1 Reagent water for volatile extractions may be generated by passing tap water through a carbon filter bed containing about 500 grams of activated carbon (Calgon Corp., Filtrasorb-300 or equivalent).

5.2.2 A water purification system (Millipore Super-Q or equivalent) may also be used to generate reagent water for volatile extractions.

5.2.3 Reagent water for volatile extractions may also be prepared by boiling water for 15 minutes. Subsequently, while maintaining the water temperature at 90 $\pm$ 5 degrees C, bubble a contaminant-free inert gas (e.g. nitrogen) through the water for 1 hour. While still hot, transfer the water to a narrow mouth screw-cap bottle under zero-headspace and seal with a Teflon-lined septum and cap.

5.3 Hydrochloric acid (1N), HCl, made from ACS reagent grade.

5.4 Nitric acid (1N), HNO_3, made from ACS reagent grade.

5.5 Sodium hydroxide (1N), NaOH, made from ACS reagent grade.

5.6 Glacial acetic acid, CH_3CH_2OOH, ACS reagent grade.

5.7 Extraction fluid.

5.7.1 Extraction fluid # 1: Add 5.7 mL glacial CH_3CH_2OOH to 500 mL of reagent water (See Section 5.2), add 64.3 mL of 1N NaOH, and dilute to a volume of 1 liter. When correctly prepared, the pH of this fluid will be 4.93 $\pm$ 0.05.

5.7.2 Extraction fluid # 2: Dilute 5.7 mL glacial CH_3CH_2OOH with reagent water (See Section 5.2) to a volume of 1 liter. When correctly prepared, the pH of this fluid will be 2.88 $\pm$ 0.05.

NOTE: These extraction fluids should be monitored frequently for impurities. The pH should be checked prior to use to ensure that these fluids are made up accurately. If impurities are found or the pH is not within the above specifications, the fluid shall be discarded and fresh extraction fluid prepared.

5.8 Analytical standards shall be prepared according to the appropriate analytical method.

6.0 SAMPLE COLLECTION, PRESERVATION, AND HANDLING

6.1 All samples shall be collected using an appropriate sampling plan.

6.2 The TCLP may place requirements on the minimal size of the field sample, depending upon the physical state or states of the waste and the analytes of concern. An aliquot is needed for preliminary evaluation of which extraction fluid is to be used for the nonvolatile analyte extraction procedure. Another aliquot may be needed to actually conduct the nonvolatile extraction (see Section 1.4 concerning the use of this extract for volatile organics). If volatile organics are of concern, another aliquot may be needed. Quality control measures may require additional aliquots. Further, it is always wise to collect more sample just in case something goes wrong with the initial attempt to conduct the test.

6.3 Preservatives shall not be added to samples before extraction.

6.4 Samples may be refrigerated unless refrigeration results in irreversible physical change to the waste. If precipitation occurs, the entire sample (including precipitate) should be extracted.

6.5 When the waste is to be evaluated for volatile analytes, care shall be taken to minimize the loss of volatiles. Samples shall be collected and stored in a manner intended to prevent the loss of volatile analytes (e.g., samples should be collected in Teflon-lined septum capped vials and stored at 4 °C. Samples should be opened only immediately prior to extraction).

6.6 TCLP extracts should be prepared for analysis and analyzed as soon as possible following extraction. Extracts or portions of extracts for metallic analyte determinations must be acidified with nitric acid to a pH < 2, unless precipitation occurs (see Section 7.2.14 if precipitation occurs). Extracts should be preserved for other analytes according to the guidance given in the individual analysis methods. Extracts or portions of extracts for organic analyte determinations shall not be allowed to come into contact with the atmosphere (i.e., no headspace) to prevent losses. See Section 8.0 (QA requirements) for acceptable sample and extract holding times.

7.0 PROCEDURE

7.1 Preliminary Evaluations

Perform preliminary TCLP evaluations on a minimum 100 gram aliquot of waste. This aliquot may not actually undergo TCLP extraction. These preliminary evaluations include: (1) determination of the percent solids (Section 7.1.1); (2) determination of whether the waste contains insignificant solids and is, therefore, its own extract after filtration (Section 7.1.2); (3) determination of whether the solid portion of the waste requires particle size reduction (Section 7.1.3); and (4) determination of which of the two extraction fluids are to be used for the nonvolatile TCLP extraction of the waste (Section 7.1.4).

7.1.1 Preliminary determination of percent solids: Percent solids is defined as that fraction of a waste sample (as a percentage of the total sample) from which no liquid may be forced out by an applied pressure, as described below.

7.1.1.1 If the waste will obviously yield no liquid when subjected to pressure filtration (i.e., is 100% solids) proceed to Section 7.1.3.

7.1.1.2 If the sample is liquid or multiphasic, liquid/solid separation to make a preliminary determination of percent solids is required. This involves the filtration device described in Section 4.3.2 and is outlined in Sections 7.1.1.3 through 7.1.1.9.

7.1.1.3 Pre-weigh the filter and the container that will receive the filtrate.

7.1.1.4 Assemble the filter holder and filter following the manufacturer's instructions. Place the filter on the support screen and secure.

7.1.1.5 Weigh out a subsample of the waste (100 gram minimum) and record the weight.

7.1.1.6 Allow slurries to stand to permit the solid phase to settle. Wastes that settle slowly may be centrifuged prior to filtration. Centrifugation is to be used only as an aid to filtration. If used, the liquid should be decanted and filtered followed by filtration of the solid portion of the waste through the same filtration system.

7.1.1.7 Quantitatively transfer the waste sample to the filter holder (liquid and solid phases). Spread the waste sample evenly over the surface of the filter. If filtration of the waste at 4 °C reduces the amount of expressed liquid over what would be expressed at room temperature then allow the sample to warm up to room temperature in the device before filtering.

NOTE: If waste material (>1% of original sample weight) has obviously adhered to the container used to transfer the sample to the filtration apparatus, determine the weight of this residue and

subtract it from the sample weight determined in Section 7.1.1.5 to determine the weight of the waste sample that will be filtered.

Gradually apply vacuum or gentle pressure of 1-10 psi, until air or pressurizing gas moves through the filter. If this point is not reached under 10 psi, and if no additional liquid has passed through the filter in any 2 minute interval, slowly increase the pressure in 10 psi increments to a maximum of 50 psi. After each incremental increase of 10 psi, if the pressurizing gas has not moved through the filter, and if no additional liquid has passed through the filter in any 2 minute interval, proceed to the next 10 psi increment. When the pressurizing gas begins to move through the filter, or when liquid flow has ceased at 50 psi (i.e., filtration does not result in any additional filtrate within any 2 minute period), stop the filtration.

NOTE: Instantaneous application of high pressure can degrade the glass fiber filter and may cause premature plugging.

7.1.1.8 The material in the filter holder is defined as the solid phase of the waste, and the filtrate is defined as the liquid phase.

NOTE: Some wastes, such as oily wastes and some paint wastes, will obviously contain some material that appears to be a liquid. Even after applying vacuum or pressure filtration, as outlined in Section 7.1.1.7, this material may not filter. If this is the case, the material within the filtration device is defined as a solid. Do not replace the original filter with a fresh filter under any circumstances. Use only one filter.

7.1.1.9 Determine the weight of the liquid phase by subtracting the weight of the filtrate container (see Section 7.1.1.3) from the total weight of the filtrate-filled container. Determine the weight of the solid phase of the waste sample by subtracting the weight of the liquid phase from the weight of the total waste sample, as determined in Section 7.1.1.5 or 7.1.1.7.

Record the weight of the liquid and solid phases. Calculate the percent solids as follows:

$$\text{Percent solids} = \frac{\text{Weight of solid (Section 7.1.1.9)}}{\text{Total weight of waste (Section 7.1.1.5 or 7.1.1.7)}} \times 100$$

7.1.2 If the percent solids determined in Section 7.1.1.9 is equal to or greater than 0.5%, then proceed either to Section 7.1.3 to determine whether the solid material requires particle size reduction or to Section 7.1.2.1 if it is noticed that a small amount of the filtrate is entrained in wetting of the filter. If the percent solids determined in Section 7.1.1.9 is less than 0.5%, then proceed to Section 7.2.9 if the

nonvolatile TCLP is to be performed and to Section 7.3 with a fresh portion of the waste if the volatile TCLP is to be performed.

7.1.2.1 Remove the solid phase and filter from the filtration apparatus.

7.1.2.2 Dry the filter and solid phase at 100 ± 20 °C until two successive weighing yield the same value within ± 1%. Record the final weight.

NOTE: Caution should be taken to ensure that the subject solid will not flash upon heating. It is recommended that the drying oven be vented to a hood or other appropriate device.

7.1.2.3 Calculate the percent dry solids as follows:

$$\text{Percent dry solids} = \frac{\text{(Wt. of dry waste + filter) - tared wt. of filter}}{\text{Initial wt. of waste (Section 7.1.1.5 or 7.1.1.7)}} \times 100$$

7.1.2.4 If the percent dry solids is less than 0.5%, then proceed to Section 7.2.9 if the nonvolatile TCLP is to be performed, and to Section 7.3 if the volatile TCLP is to be performed. If the percent dry solids is greater than or equal to 0.5%, and if the nonvolatile TCLP is to be performed, return to the beginning of this Section (7.1) and, with a fresh portion of waste, determine whether particle size reduction is necessary (Section 7.1.3) and determine the appropriate extraction fluid (Section 7.1.4). If only the volatile TCLP is to be performed, see the note in Section 7.1.4.

7.1.3 Determination of whether the waste requires particle size reduction (particle size is reduced during this step): Using the solid portion of the waste, evaluate the solid for particle size. Particle size reduction is required, unless the solid has a surface area per gram of material equal to or greater than 3.1 cm^2, or is smaller than 1 cm in its narrowest dimension (i.e., is capable of passing through a 9.5 mm (0.375 inch) standard sieve). If the surface area is smaller or the particle size larger than described above, prepare the solid portion of the waste for extraction by crushing, cutting, or grinding the waste to a surface area or particle size as described above. If the solids are prepared for organic volatiles extraction, special precautions must be taken (see Section 7.3.6).

NOTE: Surface area criteria are meant for filamentous (e.g., paper, cloth, and similar) waste materials. Actual measurement of surface area is not required, nor is it recommended. For materials that do not obviously meet the criteria, sample specific methods would need to be developed and employed to measure the surface area. Such methodology is currently not available.

7.1.4 Determination of appropriate extraction fluid: If the solid content of the waste is greater than or equal to 0.5% and if the sample will be extracted for nonvolatile constituents (Section 7.2), determine the appropriate fluid (Section 5.7) for the nonvolatiles extraction as follows:

NOTE: TCLP extraction for volatile constituents uses only extraction fluid #1 (Section 5.7.1). Therefore, if TCLP extraction for nonvolatiles is not required, proceed to Section 7.3.

7.1.4.1 Weigh out a small subsample of the solid phase of the waste, reduce the solid (if necessary) to a particle size of approximately 1 mm in diameter or less, and transfer 5.0 grams of the solid phase of the waste to a 500 mL beaker or Erlenmeyer flask.

7.1.4.2 Add 96.5 mL of reagent water to the beaker, cover with a watchglass, and stir vigorously for 5 minutes using a magnetic stirrer. Measure and record the pH. If the pH is <5.0, use extraction fluid #1. Proceed to Section 7.2.

7.1.4.3 If the pH from Section 7.1.4.2 is >5.0, add 3.5 mL 1N HCl, slurry briefly, cover with a watchglass, heat to 50 °C, and hold at 50 °C for 10 minutes.

7.1.4.4 Let the solution cool to room temperature and record the pH. If the pH is <5.0, use extraction fluid #1. If the pH is >5.0, use extraction fluid #2. Proceed to Section 7.2.

7.1.5 If the aliquot of the waste used for the preliminary evaluation (Sections 7.1.1 - 7.1.4) was determined to be 100% solid at Section 7.1.1.1, then it can be used for the Section 7.2 extraction (assuming at least 100 grams remain), and the Section 7.3 extraction (assuming at least 25 grams remain). If the aliquot was subjected to the procedure in Section 7.1.1.7, then another aliquot shall be used for the volatile extraction procedure in Section 7.3. The aliquot of the waste subjected to the procedure in Section 7.1.1.7 might be appropriate for use for the Section 7.2 extraction if an adequate amount of solid (as determined by Section 7.1.1.9) was obtained. The amount of solid necessary is dependent upon whether a sufficient amount of extract will be produced to support the analyses. If an adequate amount of solid remains, proceed to Section 7.2.10 of the nonvolatile TCLP extraction.

7.2 Procedure When Volatiles are not Involved

A minimum sample size of 100 grams (solid and liquid phases) is recommended. In some cases, a larger sample size may be appropriate, depending on the solids content of the waste sample (percent solids, See Section 7.1.1), whether the initial liquid phase of the waste will be miscible with the aqueous extract of the solid, and whether inorganics, semivolatile organics, pesticides, and herbicides are all analytes of concern. Enough solids should be generated for extraction such that the volume of TCLP extract will be sufficient to support all

of the analyses required. If the amount of extract generated by a single TCLP extraction will not be sufficient to perform all of the analyses, more than one extraction may be performed and the extracts from each combined and aliquoted for analysis.

7.2.1 If the waste will obviously yield no liquid when subjected to pressure filtration (i.e., is 100% solid, see Section 7.1.1), weigh out a subsample of the waste (100 gram minimum) and proceed to Section 7.2.9.

7.2.2 If the sample is liquid or multiphasic, liquid/solid separation is required. This involves the filtration device described in Section 4.3.2 and is outlined in Sections 7.2.3 to 7.2.8.

7.2.3 Pre-weigh the container that will receive the filtrate.

7.2.4 Assemble the filter holder and filter following the manufacturer's instructions. Place the filter on the support screen and secure. Acid wash the filter if evaluating the mobility of metals (see Section 4.4).

NOTE: Acid washed filters may be used for all nonvolatile extractions even when metals are not of concern.

7.2.5 Weigh out a subsample of the waste (100 gram minimum) and record the weight. If the waste contains <0.5% dry solids (Section 7.1.2), the liquid portion of the waste, after filtration, is defined as the TCLP extract. Therefore, enough of the sample should be filtered so that the amount of filtered liquid will support all of the analyses required of the TCLP extract. For wastes containing >0.5% dry solids (Sections 7.1.1 or 7.1.2), use the percent solids information obtained in Section 7.1.1 to determine the optimum sample size (100 gram minimum) for filtration. Enough solids should be generated by filtration to support the analyses to be performed on the TCLP extract.

7.2.6 Allow slurries to stand to permit the solid phase to settle. Wastes that settle slowly may be centrifuged prior to filtration. Use centrifugation only as an aid to filtration. If the waste is centrifuged, the liquid should be decanted and filtered followed by filtration of the solid portion of the waste through the same filtration system.

7.2.7 Quantitatively transfer the waste sample (liquid and solid phases) to the filter holder (see Section 4.3.2). Spread the waste sample evenly over the surface of the filter. If filtration of the waste at 4 °C reduces the amount of expressed liquid over what would be expressed at room temperature, then allow the sample to warm up to room temperature in the device before filtering.

NOTE: If waste material (>1% of the original sample weight) has obviously adhered to the container used to transfer the sample to the filtration apparatus, determine the weight of this residue and

subtract it from the sample weight determined in Section 7.2.5, to determine the weight of the waste sample that will be filtered.

Gradually apply vacuum or gentle pressure of 1-10 psi, until air or pressurizing gas moves through the filter. If this point is not reached under 10 psi, and if no additional liquid has passed through the filter in any 2 minute interval, slowly increase the pressure in 10 psi increments to a maximum of 50 psi. After each incremental increase of 10 psi, if the pressurizing gas has not moved through the filter, and if no additional liquid has passed through the filter in any 2 minute interval, proceed to the next 10 psi increment. When the pressurizing gas begins to move through the filter, or when the liquid flow has ceased at 50 psi (i.e., filtration does not result in any additional filtrate within a 2 minute period), stop the filtration.

NOTE: Instantaneous application of high pressure can degrade the glass fiber filter and may cause premature plugging.

7.2.8 The material in the filter holder is defined as the solid phase of the waste, and the filtrate is defined as the liquid phase. Weigh the filtrate. The liquid phase may now be either analyzed (See Section 7.2.12) or stored at 4 °C until time of analysis.

NOTE: Some wastes, such as oily wastes and some paint wastes, will obviously contain some material that appears to be a liquid. Even after applying vacuum or pressure filtration, as outlined in Section 7.2.7, this material may not filter. If this is the case, the material within the filtration device is defined as a solid and is carried through the extraction as a solid. Do not replace the original filter with a fresh filter under any circumstances. Use only one filter.

7.2.9 If the waste contains <0.5% dry solids (see Section 7.1.2), proceed to Section 7.2.13. If the waste contains >0.5% dry solids (see Section 7.1.1 or 7.1.2), and if particle size reduction of the solid was needed in Section 7.1.3, proceed to Section 7.2.10. If the waste as received passes a 9.5 mm sieve, quantitatively transfer the solid material into the extractor bottle along with the filter used to separate the initial liquid from the solid phase, and proceed to Section 7.2.11.

7.2.10 Prepare the solid portion of the waste for extraction by crushing, cutting, or grinding the waste to a surface area or particle size as described in Section 7.1.3. When the surface area or particle size has been appropriately altered, quantitatively transfer the solid material into an extractor bottle. Include the filter used to separate the initial liquid from the solid phase.

NOTE: Sieving of the waste is not normally required. Surface area requirements are meant for filamentous (e.g., paper, cloth) and similar waste materials. Actual measurement of surface area is not recommended. If sieving is necessary, a Teflon coated sieve should be used to avoid contamination of the sample.

7.2.11 Determine the amount of extraction fluid to add to the extractor vessel as follows:

$$\text{Weight of extraction fluid} = \frac{20 \times \text{percent solids (Section 7.1.1)} \times \text{weight of waste filtered (Section 7.2.5 or 7.2.7)}}{100}$$

Slowly add this amount of appropriate extraction fluid (see Section 7.1.4) to the extractor vessel. Close the extractor bottle tightly (it is recommended that Teflon tape be used to ensure a tight seal), secure in rotary agitation device, and rotate at 30 ± 2 rpm for 18 ± 2 hours. Ambient temperature (i.e., temperature of room in which extraction takes place) shall be maintained at 23 ± 2 °C during the extraction period.

NOTE: As agitation continues, pressure may build up within the extractor bottle for some types of wastes (e.g., limed or calcium carbonate containing waste may evolve gases such as carbon dioxide). To relieve excess pressure, the extractor bottle may be periodically opened (e.g., after 15 minutes, 30 minutes, and 1 hour) and vented into a hood.

7.2.12 Following the 18 ± 2 hour extraction, separate the material in the extractor vessel into its component liquid and solid phases by filtering through a new glass fiber filter, as outlined in Section 7.2.7. For final filtration of the TCLP extract, the glass fiber filter may be changed, if necessary, to facilitate filtration. Filter(s) shall be acid-washed (see Section 4.4) if evaluating the mobility of metals.

7.2.13 Prepare the TCLP extract as follows:

7.2.13.1 If the waste contained no initial liquid phase, the filtered liquid material obtained from Section 7.2.12 is defined as the TCLP extract. Proceed to Section 7.2.14.

7.2.13.2 If compatible (e.g., multiple phases will not result on combination), combine the filtered liquid resulting from Section 7.2.12 with the initial liquid phase of the waste obtained in Section 7.2.7. This combined liquid is defined as the TCLP extract. Proceed to Section 7.2.14.

7.2.13.3 If the initial liquid phase of the waste, as obtained from Section 7.2.7, is not or may not be compatible with the filtered liquid resulting from Section 7.2.12, do not combine these liquids. Analyze these liquids, collectively defined as the TCLP extract, and combine the results mathematically, as described in Section 7.2.14.

7.2.14 Following collection of the TCLP extract, the pH of the extract should be recorded. Immediately aliquot and preserve the extract for analysis. Metals aliquots must be acidified with nitric acid to

pH <2. If precipitation is observed upon addition of nitric acid to a small aliquot of the extract, then the remaining portion of the extract for metals analyses shall not be acidified and the extract shall be analyzed as soon as possible. All other aliquots must be stored under refrigeration (4 °C) until analyzed. The TCLP extract shall be prepared and analyzed according to appropriate analytical methods. TCLP extracts to be analyzed for metals shall be acid digested except in those instances where digestion causes loss of metallic analytes. If an analysis of the undigested extract shows that the concentration of any regulated metallic analyte exceeds the regulatory level, then the waste is hazardous and digestion of the extract is not necessary. However, data on undigested extracts alone cannot be used to demonstrate that the waste is not hazardous. If the individual phases are to be analyzed separately, determine the volume of the individual phases (to ± 0.5%), conduct the appropriate analyses, and combine the results mathematically by using a simple volume-weighted average:

$$\text{Final Analyte Concentration} = \frac{(V_1)\ (C_1) + (V_2)\ (C_2)}{V_1 + V_2}$$

where:

V_1 = The volume of the first phase (L).
C_1 = The concentration of the analyte of concern in the first phase (mg/L).
V_2 = The volume of the second phase (L).
C_2 = The concentration of the analyte of concern in the second phase (mg/L).

7.2.15 Compare the analyte concentrations in the TCLP extract with the levels identified in the appropriate regulations. Refer to Section 8.0 for quality assurance requirements.

7.3 Procedure When Volatiles are Involved

Use the ZHE device to obtain TCLP extract for analysis of volatile compounds only. Extract resulting from the use of the ZHE shall not be used to evaluate the mobility of nonvolatile analytes (e.g., metals, pesticides, etc.).

The ZHE device has approximately a 500 mL internal capacity. The ZHE can thus accommodate a maximum of 25 grams of solid (defined as that fraction of a sample from which no additional liquid may be forced out by an applied pressure of 50 psi), due to the need to add an amount of extraction fluid equal to 20 times the weight of the solid phase.

Charge the ZHE with sample only once and do not open the device until the final extract (of the solid) has been collected. Repeated filling of the ZHE to obtain 25 grams of solid is not permitted.

Do not allow the waste, the initial liquid phase, or the extract to be exposed to the atmosphere for any more time than is absolutely necessary. Any

manipulation of these materials should be done when cold (4 °C) to minimize loss of volatiles.

7.3.1 Pre-weigh the (evacuated) filtrate collection container (See Section 4.6) and set aside. If using a TEDLAR® bag, express all liquid from the ZHE device into the bag, whether for the initial or final liquid/solid separation, and take an aliquot from the liquid in the bag for analysis. The containers listed in Section 4.6 are recommended for use under the conditions stated in Sections 4.6.1 - 4.6.3.

7.3.2 Place the ZHE piston within the body of the ZHE (it may be helpful first to moisten the piston O-rings slightly with extraction fluid). Adjust the piston within the ZHE body to a height that will minimize the distance the piston will have to move once the ZHE is charged with sample (based upon sample size requirements determined from Section 7.3, Section 7.1.1 and/or 7.1.2). Secure the gas inlet/outlet flange (bottom flange) onto the ZHE body in accordance with the manufacturer's instructions. Secure the glass fiber filter between the support screens and set aside. Set liquid inlet/outlet flange (top flange) aside.

7.3.3 If the waste is 100% solid (see Section 7.1.1), weigh out a subsample (25 gram maximum) of the waste, record weight, and proceed to Section 7.3.5.

7.3.4 If the waste contains < 0.5% dry solids (Section 7.1.2), the liquid portion of waste, after filtration, is defined as the TCLP extract. Filter enough of the sample so that the amount of filtered liquid will support all of the volatile analyses required. For wastes containing ≥ 0.5% dry solids (Sections 7.1.1 and/or 7.1.2), use the percent solids information obtained in Section 7.1.1 to determine the optimum sample size to charge into the ZHE. The recommended sample size is as follows:

7.3.4.1 For wastes containing < 5% solids (see Section 7.1.1), weigh out a 500 gram subsample of waste and record the weight.

7.3.4.2 For wastes containing ≥ 5% solids (see Section 7.1.1), determine the amount of waste to charge into the ZHE as follows:

$$\text{Weight of waste to charge ZHE} = \frac{25}{\text{percent solids (Section 7.1.1)}} \times 100$$

Weigh out a subsample of the waste of the appropriate size and record the weight.

7.3.5 If particle size reduction of the solid portion of the waste was required in Section 7.1.3, proceed to Section 7.3.6. If

particle size reduction was not required in Section 7.1.3, proceed to Section 7.3.7.

7.3.6 Prepare the waste for extraction by crushing, cutting, or grinding the solid portion of the waste to a surface area or particle size as described in Section 7.1.3. Wastes and appropriate reduction equipment should be refrigerated, if possible, to 4 °C prior to particle size reduction. The means used to effect particle size reduction must not generate heat in and of itself. If reduction of the solid phase of the waste is necessary, exposure of the waste to the atmosphere should be avoided to the extent possible.

NOTE: Sieving of the waste is not recommended due to the possibility that volatiles may be lost. The use of an appropriately graduated ruler is recommended as an acceptable alternative. Surface area requirements are meant for filamentous (e.g., paper, cloth) and similar waste materials. Actual measurement of surface area is not recommended.

When the surface area or particle size has been appropriately altered, proceed to Section 7.3.7.

7.3.7 Waste slurries need not be allowed to stand to permit the solid phase to settle. Do not centrifuge wastes prior to filtration.

7.3.8 Quantitatively transfer the entire sample (liquid and solid phases) quickly to the ZHE. Secure the filter and support screens onto the top flange of the device and secure the top flange to the ZHE body in accordance with the manufacturer's instructions. Tighten all ZHE fittings and place the device in the vertical position (gas inlet/outlet flange on the bottom). Do not attach the extract collection device to the top plate.

NOTE: If waste material (>1% of original sample weight) has obviously adhered to the container used to transfer the sample to the ZHE, determine the weight of this residue and subtract it from the sample weight determined in Section 7.3.4 to determine the weight of the waste sample that will be filtered.

Attach a gas line to the gas inlet/outlet valve (bottom flange) and, with the liquid inlet/outlet valve (top flange) open, begin applying gentle pressure of 1-10 psi (or more if necessary) to force all headspace slowly out of the ZHE device into a hood. At the first appearance of liquid from the liquid inlet/outlet valve, quickly close the valve and discontinue pressure. If filtration of the waste at 4 °C reduces the amount of expressed liquid over what would be expressed at room temperature, then allow the sample to warm up to room temperature in the device before filtering. If the waste is 100% solid (see Section 7.1.1), slowly increase the pressure to a maximum of 50 psi to force most of the headspace out of the device and proceed to Section 7.3.12.

7.3.9 Attach the evacuated pre-weighed filtrate collection container to the liquid inlet/outlet valve and open the valve. Begin applying gentle pressure of 1-10 psi to force the liquid phase of the sample into the filtrate collection container. If no additional liquid has passed through the filter in any 2 minute interval, slowly increase the pressure in 10 psi increments to a maximum of 50 psi. After each incremental increase of 10 psi, if no additional liquid has passed through the filter in any 2 minute interval, proceed to the next 10 psi increment. When liquid flow has ceased such that continued pressure filtration at 50 psi does not result in any additional filtrate within a 2 minute period, stop the filtration. Close the liquid inlet/outlet valve, discontinue pressure to the piston, and disconnect and weigh the filtrate collection container.

NOTE: Instantaneous application of high pressure can degrade the glass fiber filter and may cause premature plugging.

7.3.10 The material in the ZHE is defined as the solid phase of the waste and the filtrate is defined as the liquid phase.

NOTE: Some wastes, such as oily wastes and some paint wastes, will obviously contain some material that appears to be a liquid. Even after applying pressure filtration, this material will not filter. If this is the case, the material within the filtration device is defined as a solid and is carried through the TCLP extraction as a solid.

If the original waste contained <0.5% dry solids (see Section 7.1.2), this filtrate is defined as the TCLP extract and is analyzed directly. Proceed to Section 7.3.15.

7.3.11 The liquid phase may now be either analyzed immediately (See Sections 7.3.13 through 7.3.15) or stored at 4 °C under minimal headspace conditions until time of analysis. Determine the weight of extraction fluid #1 to add to the ZHE as follows:

$$\text{Weight of extraction fluid} = \frac{20 \times \text{percent solids (Section 7.1.1)} \times \text{weight of waste filtered (Section 7.3.4 or 7.3.8)}}{100}$$

7.3.12 The following Sections detail how to add the appropriate amount of extraction fluid to the solid material within the ZHE and agitation of the ZHE vessel. Extraction fluid #1 is used in all cases (See Section 5.7).

7.3.12.1 With the ZHE in the vertical position, attach a line from the extraction fluid reservoir to the liquid inlet/outlet valve. The line used shall contain fresh extraction fluid and should be preflushed with fluid to eliminate any air pockets in the line. Release gas pressure on the ZHE piston (from the gas inlet/outlet valve), open the liquid inlet/outlet valve,

and begin transferring extraction fluid (by pumping or similar means) into the ZHE. Continue pumping extraction fluid into the ZHE until the appropriate amount of fluid has been introduced into the device.

7.3.12.2 After the extraction fluid has been added, immediately close the liquid inlet/outlet valve and disconnect the extraction fluid line. Check the ZHE to ensure that all valves are in their closed positions. Manually rotate the device in an end-over-end fashion 2 or 3 times. Reposition the ZHE in the vertical position with the liquid inlet/outlet valve on top. Pressurize the ZHE to 5-10 psi (if necessary) and slowly open the liquid inlet/outlet valve to bleed out any headspace (into a hood) that may have been introduced due to the addition of extraction fluid. This bleeding shall be done quickly and shall be stopped at the first appearance of liquid from the valve. Re-pressurize the ZHE with 5-10 psi and check all ZHE fittings to ensure that they are closed.

7.3.12.3 Place the ZHE in the rotary agitation apparatus (if it is not already there) and rotate at 30 $\pm$ 2 rpm for 18 $\pm$ 2 hours. Ambient temperature (i.e., temperature of room in which extraction occurs) shall be maintained at 23 $\pm$ 2 °C during agitation.

7.3.13 Following the 18 $\pm$ 2 hour agitation period, check the pressure behind the ZHE piston by quickly opening and closing the gas inlet/outlet valve and noting the escape of gas. If the pressure has not been maintained (i.e., no gas release observed), the device is leaking. Check the ZHE for leaking as specified in Section 4.2.1, and perform the extraction again with a new sample of waste. If the pressure within the device has been maintained, the material in the extractor vessel is once again separated into its component liquid and solid phases. If the waste contained an initial liquid phase, the liquid may be filtered directly into the same filtrate collection container (i.e., TEDLAR® bag) holding the initial liquid phase of the waste. A separate filtrate collection container must be used if combining would create multiple phases, or there is not enough volume left within the filtrate collection container. Filter through the glass fiber filter, using the ZHE device as discussed in Section 7.3.9. All extract shall be filtered and collected if the TEDLAR® bag is used, if the extract is multiphasic, or if the waste contained an initial liquid phase (see Sections 4.6 and 7.3.1).

NOTE: An in-line glass fiber filter may be used to filter the material within the ZHE if it is suspected that the glass fiber filter has been ruptured.

7.3.14 If the original waste contained no initial liquid phase, the filtered liquid material obtained from Section 7.3.13 is defined as the TCLP extract. If the waste contained an initial liquid phase, the

filtered liquid material obtained from Section 7.3.13 and the initial liquid phase (Section 7.3.9) are collectively defined as the TCLP extract.

7.3.15 Following collection of the TCLP extract, immediately prepare the extract for analysis and store with minimal headspace at 4 °C until analyzed. Analyze the TCLP extract according to the appropriate analytical methods. If the individual phases are to be analyzed separately (i.e., are not miscible), determine the volume of the individual phases (to 0.5%), conduct the appropriate analyses, and combine the results mathematically by using a simple volume-weighted average:

$$\text{Final Analyte Concentration} = \frac{(V_1)\ (C_1) + (V_2)\ (C_2)}{V_1 + V_2}$$

where:

V_1 = The volume of the first phases (L).
C_1 = The concentration of the analyte of concern in the first phase (mg/L).
V_2 = The volume of the second phase (L).
C_2 = The concentration of the analyte of concern in the second phase (mg/L).

7.3.16 Compare the analyte concentrations in the TCLP extract with the levels identified in the appropriate regulations. Refer to Section 8.0 for quality assurance requirements.

8.0 QUALITY ASSURANCE

8.1 A minimum of one blank (using the same extraction fluid as used for the samples) must be analyzed for every 20 extractions that have been conducted in an extraction vessel.

8.2 A matrix spike shall be performed for each waste type (e.g., wastewater treatment sludge, contaminated soil, etc.) unless the result exceeds the regulatory level and the data are being used solely to demonstrate that the waste property exceeds the regulatory level. A minimum of one matrix spike must be analyzed for each analytical batch. As a minimum, follow the matrix spike addition guidance provided in each analytical method.

8.2.1 Matrix spikes are to be added after filtration of the TCLP extract and before preservation. Matrix spikes should not be added prior to TCLP extraction of the sample.

8.2.2 In most cases, matrix spikes should be added at a concentration equivalent to the corresponding regulatory level. If the analyte concentration is less than one half the regulatory level, the spike concentration may be as low as one half of the analyte concentration, but may not be not less than five times the method detection limit. In order to avoid differences in matrix effects, the matrix spikes must be

added to the same nominal volume of TCLP extract as that which was analyzed for the unspiked sample.

8.2.3 The purpose of the matrix spike is to monitor the performance of the analytical methods used, and to determine whether matrix interferences exist. Use of other internal calibration methods, modification of the analytical methods, or use of alternate analytical methods may be needed to accurately measure the analyte concentration in the TCLP extract when the recovery of the matrix spike is below the expected analytical method performance.

8.2.4 Matrix spike recoveries are calculated by the following formula:

$$\%R\ (\%Recovery) = 100\ (X_s - X_u)/K$$

where:
X_s = measured value for the spiked sample,
X_u = measured value for the unspiked sample, and
K = known value of the spike in the sample.

8.3 All quality control measures described in the appropriate analytical methods shall be followed.

8.4 The use of internal calibration quantitation methods shall be employed for a metallic contaminant if: (1) Recovery of the contaminant from the TCLP extract is not at least 50% and the concentration does not exceed the regulatory level, and (2) The concentration of the contaminant measured in the extract is within 20% of the appropriate regulatory level.

8.4.1. The method of standard additions shall be employed as the internal calibration quantitation method for each metallic contaminant.

8.4.2 The method of standard additions requires preparing calibration standards in the sample matrix rather than reagent water or blank solution. It requires taking four identical aliquots of the solution and adding known amounts of standard to three of these aliquots. The forth aliquot is the unknown. Preferably, the first addition should be prepared so that the resulting concentration is approximately 50% of the expected concentration of the sample. The second and third additions should be prepared so that the concentrations are approximately 100% and 150% of the expected concentration of the sample. All four aliquots are maintained at the same final volume by adding reagent water or a blank solution, and may need dilution adjustment to maintain the signals in the linear range of the instrument technique. All four aliquots are analyzed.

8.4.3 Prepare a plot, or subject data to linear regression, of instrument signals or external-calibration-derived concentrations as the dependant variable (y-axis) versus concentrations of the additions of standard as the independent variable (x-axis). Solve for the intercept of

the abscissa (the independent variable, x-axis) which is the concentration in the unknown.

8.4.4 Alternately, subtract the instrumental signal or external-calibration-derived concentration of the unknown (unspiked) sample from the instrumental signals or external-calibration-derived concentrations of the standard additions. Plot or subject to linear regression of the corrected instrument signals or external-calibration-derived concentrations as the dependant variable versus the independent variable. Derive concentrations for unknowns using the internal calibration curve as if it were an external calibration curve.

8.5 Samples must undergo TCLP extraction within the following time periods:

SAMPLE MAXIMUM HOLDING TIMES [Days]				
	From: Field collection To: TCLP extraction	From: TCLP extraction To: Preparative extraction	From: Preparative extraction To: Determinative analysis	Total elapsed time
Volatiles	14	NA	14	28
Semi-volatiles	14	7	40	61
Mercury	28	NA	28	56
Metals, except mercury	180	NA	180	360

NA = Not applicable

If sample holding times are exceeded, the values obtained will be considered minimal concentrations. Exceeding the holding time is not acceptable in establishing that a waste does not exceed the regulatory level. Exceeding the holding time will not invalidate characterization if the waste exceeds the regulatory level.

9.0 METHOD PERFORMANCE

9.1 Ruggedness. Two ruggedness studies have been performed to determine the effect of various perturbations on specific elements of the TCLP protocol. Ruggedness testing determines the sensitivity of small procedural variations which might be expected to occur during routine laboratory application.

9.1.1 Metals - The following conditions were used when leaching a waste for metals analysis:

Varying Conditions	
Liquid/Solid ratio	19:1 vs. 21:1
Extraction time	16 hours vs. 18 hours
Headspace	20% vs. 60%
Buffer #2 acidity	190 meq vs. 210 meq
Acid-washed filters	yes vs. no
Filter type	0.7 μm glass fiber vs. 0.45 μm vs. polycarbonate
Bottle type	borosilicate vs. flint glass

Of the seven method variations examined, acidity of the extraction fluid had the greatest impact on the results. Four of 13 metals from an API separator sludge/electroplating waste (API/EW) mixture and two of three metals from an ammonia lime still bottom waste were extracted at higher levels by the more acidic buffer. Because of the sensitivity to pH changes, the method requires that the extraction fluids be prepared so that the final pH is within ± 0.05 units as specified.

9.1.2 Volatile Organic Compounds - The following conditions were used when leaching a waste for VOC analysis:

Varying Conditions	
Liquid/Solid ratio	19:1 vs. 21:1
Headspace	0% vs. 5%
Buffer #1 acidity	60 meq vs. 80 meq
Method of storing extract	Syringe vs. Tedlar® bag
Aliquotting	yes vs. no
Pressure behind piston	0 psi vs. 20 psi

None of the parameters had a significant effect on the results of the ruggedness test.

9.2 Precision. Many TCLP precision (reproducibility) studies have been performed, and have shown that, in general, the precision of the TCLP is comparable to or exceeds that of the EP toxicity test and that method precision is adequate. One of the more significant contributions to poor precision appears to be related to sample homogeneity and inter-laboratory variation (due to the nature of waste materials).

9.2.1 Metals - The results of a multi-laboratory study are shown in Table 6, and indicate that a single analysis of a waste may not be adequate for waste characterization and identification requirements.

9.2.2 Semi-Volatile Organic Compounds - The results of two studies are shown in Tables 7 and 8. Single laboratory precision was excellent with greater than 90 percent of the results exhibiting an RSD less than 25 percent. Over 85 percent of all individual compounds in the multi-laboratory study fell in the RSD range of 20 - 120 percent. Both studies concluded that the TCLP provides adequate precision. It was also determined that the high acetate content of the extraction fluid did not present problems (i.e., column degradation of the gas chromatograph) for the analytical conditions used.

9.2.3 Volatile Organic Compounds - Eleven laboratories participated in a collaborative study of the use of the ZHE with two waste types which were fortified with a mixture of VOCs. The results of the collaborative study are shown in Table 9. Precision results for VOCs tend to occur over a considerable range. However, the range and mean RSD compared very closely to the same collaborative study metals results in Table 6. Blackburn and Show concluded that at the 95% level of significance: 1) recoveries among laboratories were statistically similar, 2) recoveries did not vary significantly between the two sample types, and 3) each laboratory showed the same pattern of recovery for each of the two samples.

10.0 REFERENCES

1. Blackburn, W.B. and Show, I. "Collaborative Study of the Toxicity Characteristics Leaching Procedure (TCLP)." Draft Final Report, Contract No. 68-03-1958, S-Cubed, November 1986.

2. Newcomer, L.R., Blackburn, W.B., Kimmell, T.A. "Performance of the Toxicity Characteristic Leaching Procedure." Wilson Laboratories, S-Cubed, U.S. EPA, December 1986.

3. Williams, L.R., Francis, C.W.; Maskarinec, M.P., Taylor D.R., and Rothman, N. "Single-Laboratory Evaluation of Mobility Procedure for Solid Waste." EMSL, ORNL, S-Cubed, ENSECO.

Table 1.
Volatile Analytes[1,2]

Compound	CAS No.
Acetone	67-64-1
Benzene	71-43-2
n-Butyl alcohol	71-36-3
Carbon disulfide	75-15-0
Carbon tetrachloride	56-23-5
Chlorobenzene	108-90-7
Chloroform	67-66-3
1,2-Dichloroethane	107-06-2
1,1-Dichloroethylene	75-35-4
Ethyl acetate	141-78-6
Ethyl benzene	100-41-4
Ethyl ether	60-29-7
Isobutanol	78-83-1
Methanol	67-56-1
Methylene chloride	75-09-2
Methyl ethyl ketone	78-93-3
Methyl isobutyl ketone	108-10-1
Tetrachloroethylene	127-18-4
Toluene	108-88-3
1,1,1,-Trichloroethane	71-55-6
Trichloroethylene	79-01-6
Trichlorofluoromethane	75-69-4
1,1,2-Trichloro-1,2,2-trifluoroethane	76-13-1
Vinyl chloride	75-01-4
Xylene	1330-20-7

[1] When testing for any or all of these analytes, the zero-headspace extractor vessel shall be used instead of the bottle extractor.

[2] Benzene, carbon tetrachloride, chlorobenzene, chloroform, 1,2-dichloroethane, 1,1-dichloroethylene, methyl ethyl ketone, tetrachloroethylene, and vinyl chloride are toxicity characteristic constituents.

Table 2.
Suitable Rotary Agitation Apparatus[1]

Company	Location	Model No.
Analytical Testing and Consulting Services, Inc.	Warrington, PA (215) 343-4490	4-vessel extractor (DC20S) 8-vessel extractor (DC20) 12-vessel extractor (DC20B) 24-vessel extractor (DC24C)
Associated Design and Manufacturing Company	Alexandria, VA (703) 549-5999	2-vessel (3740-2-BRE) 4-vessel (3740-4-BRE) 6-vessel (3740-6-BRE) 8-vessel (3740-8-BRE) 12-vessel (3740-12-BRE) 24-vessel (3740-24-BRE)
Environmental Machine and Design, Inc.	Lynchburg, VA (804) 845-6424	8-vessel (08-00-00) 4-vessel (04-00-00)
IRA Machine Shop and Laboratory	Santurce, PR (809) 752-4004	8-vessel (011001)
Lars Lande Manufacturing	Whitmore Lake, MI (313) 449-4116	10-vessel (10VRE) 5-vessel (5VRE) 6-vessel (6VRE)
Millipore Corp.	Bedford, MA (800) 225-3384	4-ZHE or 4 2-liter bottle extractor (YT310RAHW)

[1] Any device that rotates the extraction vessel in an end-over-end fashion at 30 ± 2 rpm is acceptable.

Table 3.
Suitable Zero-Headspace Extractor Vessels[1]

Company	Location	Model No.
Analytical Testing & Consulting Services, Inc.	Warrington, PA (215) 343-4490	C102, Mechanical Pressure Device
Associated Design and Manufacturing Company	Alexandria, VA (703) 549-5999	3745-ZHE, Gas Pressure Device
Lars Lande Manufacturing[2]	Whitmore Lake, MI (313) 449-4116	ZHE-11, Gas Pressure Device
Millipore Corporation	Bedford, MA (800) 225-3384	YT30090HW, Gas Pressure Device
Environmental Machine and Design, Inc.	Lynchburg, VA (804) 845-6424	VOLA-TOX1, Gas Pressure Device
Gelman Science	Ann Arbor, MI (800) 521-1520	15400 Gas Pressure Device

[1] Any device that meets the specifications listed in Section 4.2.1 of the method is suitable.

[2] This device uses a 110 mm filter.

Table 4.
Suitable Filter Holders[1]

Company	Location	Model/ Catalogue No.	Size
Nucleopore Corporation	Pleasanton, CA (800) 882-7711	425910 410400	142 mm 47 mm
Micro Filtration Systems	Dublin, CA (800) 334-7132 (415) 828-6010	302400 311400	142 mm 47 mm
Millipore Corporation	Bedford, MA (800) 225-3384	YT30142HW XX1004700	142 mm 47 mm

[1] Any device capable of separating the liquid from the solid phase of the waste is suitable, providing that it is chemically compatible with the waste and the constituents to be analyzed. Plastic devices (not listed above) may be used when only inorganic analytes are of concern. The 142 mm size filter holder is recommended.

Table 5.
Suitable Filter Media[1]

Company	Location	Model	Pore Size (μm)
Millipore Corporation	Bedford, MA (800) 225-3384	AP40	0.7
Nucleopore Corporation	Pleasanton, CA (415) 463-2530	211625	0.7
Whatman Laboratory Products, Inc.	Clifton, NJ (201) 773-5800	GFF	0.7
Micro Filtration Systems	Dublin, CA (800) 334-7132 (415) 828-6010	GF75	0.7
Gelman Science	Ann Arbor, MI (800) 521-1520	66256 (90mm) 66257 (142mm)	0.7

[1] Any filter that meets the specifications in Section 4.4 of the Method is suitable.

Table 6. Multi-Laboratory TCLP Metals, Precision

Waste	Extraction Fluid	Metal	$\bar{X}$	S	%RSD
Ammonia Lime Still Bottoms	#1	Cadmium	0.053	0.031	60
	#2		0.023	0.017	76
	#1	Chromium	0.015	0.0014	93
	#2		0.0032	0.0037	118
	#1	Lead	0.0030	0.0027	90
	#2		0.0032	0.0028	87
API/EW Mixture	#1	Cadmium	0.0046	0.0028	61
	#2		0.0005	0.0004	77
	#1	Chromium	0.0561	0.0227	40
	#2		0.105	0.018	17
	#1	Lead	0.0031	0.0031	100
	#2		0.0124	0.0136	110
Fossil Fuel Fly Ash	#1	Cadmium	0.080	0.069	86
	#2		0.093	0.067	72
	#1	Chromium	0.017	0.014	85
	#2		0.070	0.040	57
	#1	Lead	0.0087	0.0074	85
	#2		0.0457	0.0083	18
				%RSD Range = 17 - 118 Mean %RSD = 74	

NOTE: $\bar{X}$ = Mean results from 6 - 12 different laboratories
Units = mg/L
Extraction Fluid #1 = pH 4.9
#2 = pH 2.9

Table 7. Single-Laboratory Semi-Volatiles, Precision

Waste	Compound	Extraction Fluid	$\bar{X}$	S	%RSD
Ammonia Lime Still Bottoms	Phenol	#1	19000	2230	11.6
		#2	19400	929	4.8
	2-Methylphenol	#1	2000	297	14.9
		#2	1860	52.9	2.8
	4-Methylphenol	#1	7940	1380	17.4
		#2	7490	200	2.7
	2,4-Dimethylphenol	#1	321	46.8	14.6
		#2	307	45.8	14.9
	Naphthalene	#1	3920	413	10.5
		#2	3827	176	4.6
	2-Methylnaphthalene	#1	290	44.8	15.5
		#2	273	19.3	7.1
	Dibenzofuran	#1	187	22.7	12.1
		#2	187	7.2	3.9
	Acenaphthylene	#1	703	89.2	12.7
		#2	663	20.1	3.0
	Fluorene	#1	151	17.6	11.7
		#2	156	2.1	1.3
	Phenanthrene	#1	241	22.7	9.4
		#2	243	7.9	3.3
	Anthracene	#1	33.2	6.19	18.6
		#2	34.6	1.55	4.5
	Fluoranthrene	#1	25.3	1.8	7.1
		#2	26.0	1.8	7.1
API/EW Mixture	Phenol	#1	40.7	13.5	33.0
		#2	19.0	1.76	9.3
	2,4-Dimethylphenol	#1	33.0	9.35	28.3
		#2	43.3	8.61	19.9
	Naphthalene	#1	185	29.4	15.8
		#2	165	24.8	15.0
	2-Methylnaphthalene	#1	265	61.2	23.1
		#2	200	18.9	9.5
				%RSD Range = 1 - 33 Mean %RSD = 12	

NOTE: Units = μg/L
Extractions were performed in triplicate
All results were at least 2x the detection limit
Extraction Fluid #1 = pH 4.9
#2 = pH 2.9

Table 8. Multi-Laboratory Semi-Volatiles, Precision

Waste	Compound	Extraction Fluid	$\bar{X}$	S	%RSD
Ammonia Lime	BNAs	#1	10043	7680	76.5
Still Bottoms (A)		#2	10376	6552	63.1
API/EW	BNAs	#1	1624	675	41.6
Mixture (B)		#2	2074	1463	70.5
Fossil Fuel	BNAs	#1	750	175	23.4
Fly Ash (C)		#2	739	342	46.3
					Mean %RSD = 54

NOTE: Units = μg/L
$\bar{X}$ = Mean results from 3 - 10 labs
Extraction Fluid #1 = pH 4.9
#2 = pH 2.9

%RSD Range for Individual Compounds

A, #1	0 - 113
A, #2	28 - 108
B, #1	20 - 156
B, #2	49 - 128
C, #1	36 - 143
C, #2	61 - 164

Table 9. Multi-Laboratory (11 Labs) VOCs, Precision

Waste	Compound	$\bar{X}$	S	%RSD
Mine Tailings	Vinyl chloride	6.36	6.36	100
	Methylene chloride	12.1	11.8	98
	Carbon disulfide	5.57	2.83	51
	1,1-Dichloroethene	21.9	27.7	127
	1,1-Dichloroethane	31.4	25.4	81
	Chloroform	46.6	29.2	63
	1,2-Dichloroethane	47.8	33.6	70
	2-Butanone	43.5	36.9	85
	1,1,1-Trichloroethane	20.9	20.9	100
	Carbon tetrachloride	12.0	8.2	68
	Trichloroethene	24.7	21.2	86
	1,1,2-Trichloroethene	19.6	10.9	56
	Benzene	37.9	28.7	76
	1,1,2,2-Tetrachloroethane	34.9	25.6	73
	Toluene	29.3	11.2	38
	Chlorobenzene	35.6	19.3	54
	Ethylbenzene	4.27	2.80	66
	Trichlorofluoromethane	3.82	4.40	115
	Acrylonitrile	76.7	110.8	144
Ammonia Lime Still Bottoms	Vinyl chloride	5.00	4.71	94
	Methylene chloride	14.3	13.1	92
	Carbon disulfide	3.37	2.07	61
	1,1-Dichloroethene	52.1	38.8	75
	1,1-Dichloroethane	52.8	25.6	49
	Chloroform	64.7	28.4	44
	1,2-Dichloroethane	43.1	31.5	73
	2-Butanone	59.0	39.6	67
	1,1,1-Trichloroethane	53.6	40.9	76
	Carbon tetrachloride	7.10	6.1	86
	Trichloroethene	57.3	34.2	60
	1,1,2-Trichloroethene	6.7	4.7	70
	Benzene	61.3	26.8	44
	1,1,2,2-Tetrachloroethane	3.16	2.1	66
	Toluene	69.0	18.5	27
	Chlorobenzene	71.8	12.0	17
	Ethylbenzene	3.70	2.2	58
	Trichlorofluoromethane	4.05	4.8	119
	Acrylonitrile	29.4	34.8	118
			%RSD Range = 17 - 144 Mean %RSD = 75	

NOTE: Units = μg/L

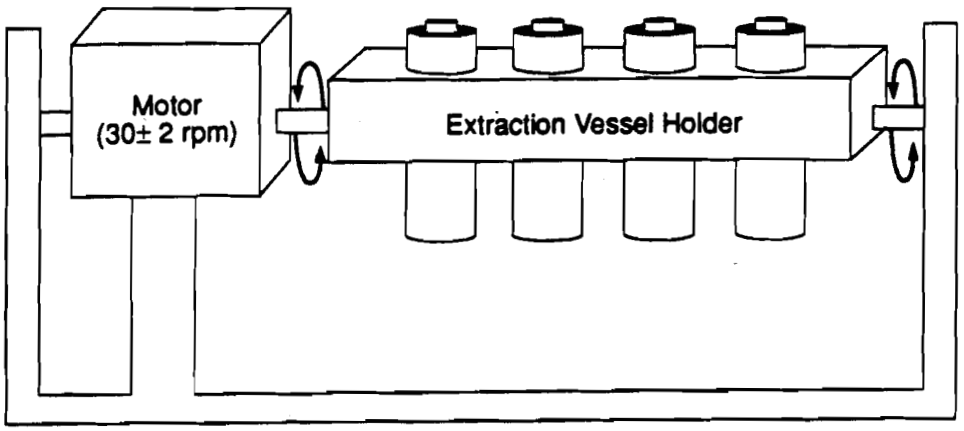

Figure 1. Rotary Agitation Apparatus

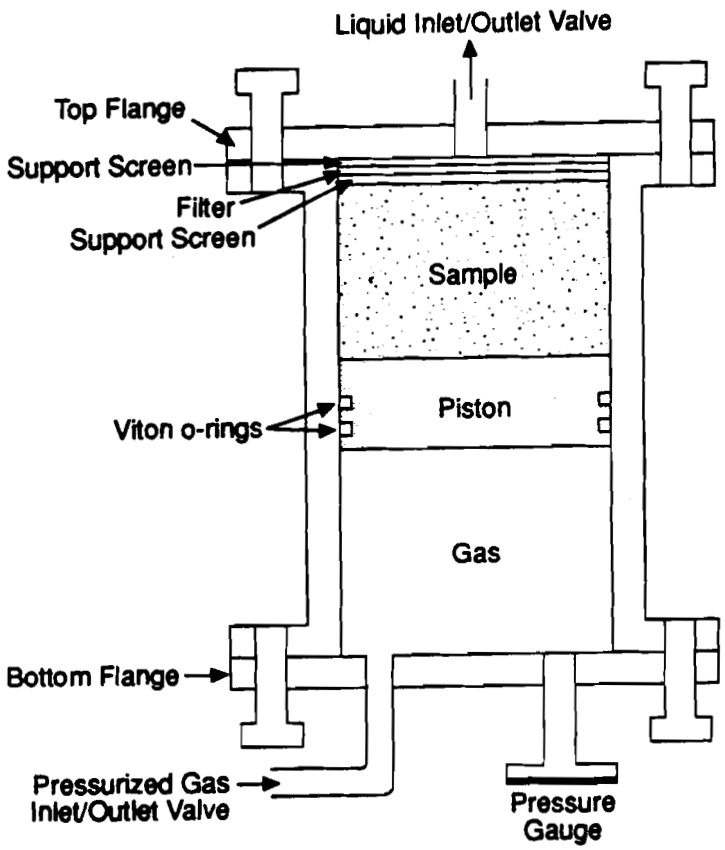

Figure 2. Zero-Headspace Extractor (ZHE)

METHOD 1311

TOXICITY CHARACTERISTIC LEACHATE PROCEDURE

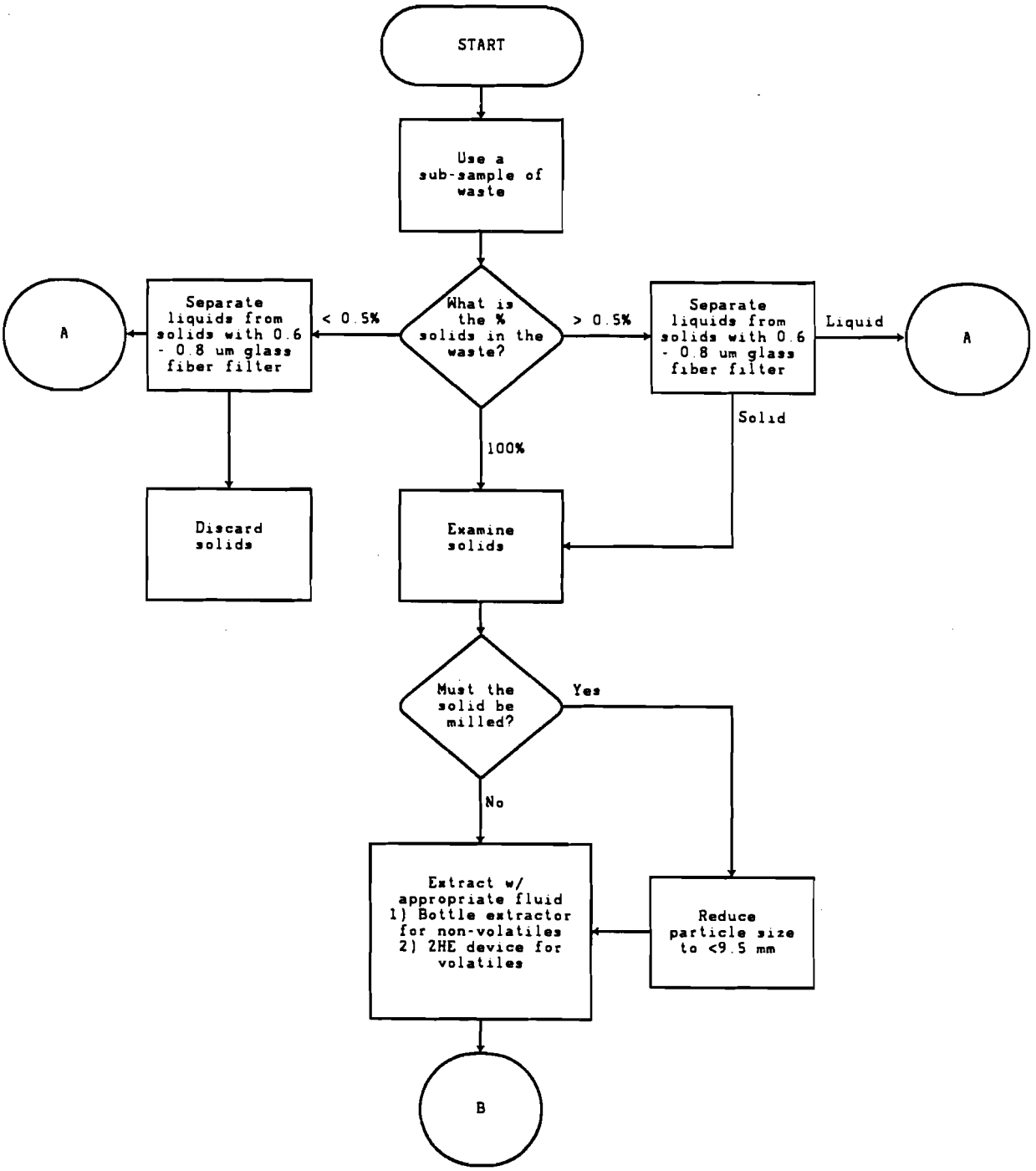

METHOD 1311 (CONTINUED)

TOXICITY CHARACTERISTIC LEACHATE PROCEDURE

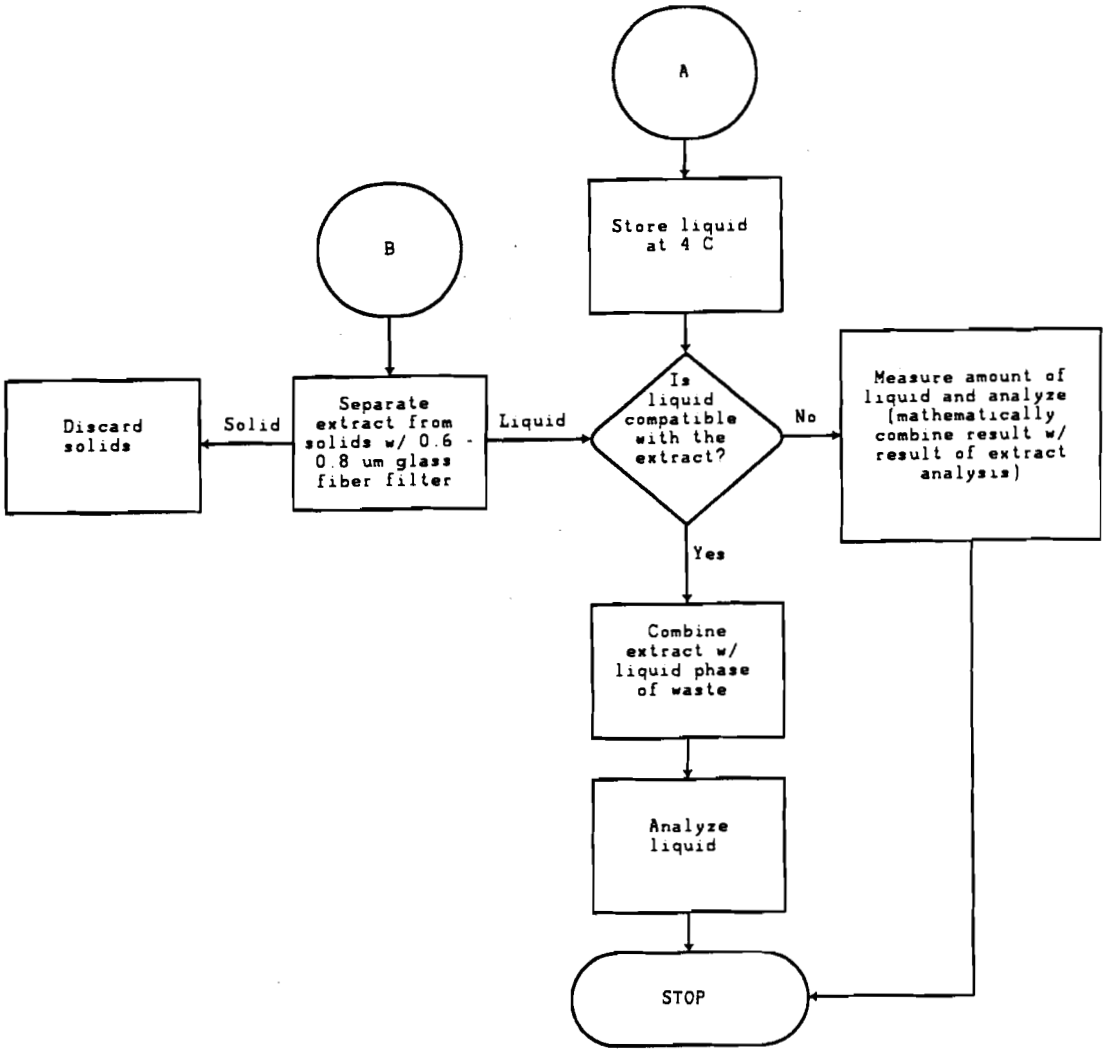

APPENDIX

COMPANY REFERENCES

The following listing of frequently-used addresses is provided for the convenience of users of this manual. No endorsement is intended or implied.

Ace Glass Company
1342 N.W. Boulevard
P.O. Box 688
Vineland, NJ 08360
(609) 692-3333

Aldrich Chemical Company
Department T
P.O. Box 355
Milwaukee, WI 53201

Alpha Products
5570 - T W. 70th Place
Chicago, IL 60638
(312) 586-9810

Barneby and Cheney Company
E. 8th Avenue and N. Cassidy Street
P.O. Box 2526
Columbus, OH 43219
(614) 258-9501

Bio - Rad Laboratories
2200 Wright Avenue
Richmond, CA 94804
(415) 234-4130

Burdick & Jackson Lab Inc.
1953 S. Harvey Street
Muskegon, MO 49442

Calgon Corporation
P.O. Box 717
Pittsburgh, PA 15230
(412) 777-8000

Conostan Division
Conoco Speciality Products, Inc.
P.O. Box 1267
Ponca City, OK 74601
(405) 767-3456

Corning Glass Works
Houghton Park
Corning, NY 14830
(315) 974-9000

Dohrmann, Division of Xertex Corporation
3240 - T Scott Boulevard
Santa Clara, CA 95050
(408) 727-6000
(800) 538-7708

E. M. Laboratories, Inc.
500 Executive Boulevard
Elmsford, NY 10523

Fisher Scientific Co.
203 Fisher Building
Pittsburgh, PA 15219
(412) 562-8300

General Electric Corporation
3135 Easton Turnpike
Fairfield, CT 06431
(203) 373-2211

Graham Manufactory Co., Inc.
20 Florence Avenue
Batavia, NY 14020
(716) 343-2216

Hamilton Industries
1316 18th Street
Two Rivers, WI 54241
(414) 793-1121

ICN Life Sciences Group
3300 Hyland Avenue
Costa Mesa, CA 92626

Johns - Manville Corporation
P.O. Box 5108
Denver, CO 80217

Kontes Glass Company
8000 Spruce Street
Vineland, NJ 08360

Millipore Corporation
80 Ashby Road
Bedford, MA 01730
(617) 275-9200
(800) 225-1380

National Bureau of Standards
U.S. Department of Commerce
Washington, DC 20234
(202) 921-1000

Pierce Chemical Company
Box 117
Rockford, IL 61105
(815) 968-0747

Scientific Glass and Instrument, Inc.
7246 - T Wynnwood
P.O. Box 6
Houston, TX 77001
(713) 868-1481

Scientific Products Company
1430 Waukegon Road
McGaw Park, IL 60085
(312) 689-8410

Spex Industries
3880 - T and Park Avenue
Edison, NJ 08820

Waters Associates
34 - T Maple Street
Milford, MA 01757
(617) 478-2000
(800) 252-4752

Whatman Laboratory Products, Inc.
Clifton, NJ 07015
(201) 773-5800

☆ U.S. GOVERNMENT PRINTING OFFICE:1994-381-495