Class 1* Permit Modification Notification

Change to Closure Schedule for Panels 1, 2, and 3

Waste Isolation Pilot Plant
Carlsbad, New Mexico

WIPP HWFP #NM4890139088-TSDF

November 2006

DRAFT

Table of Contents

Table of Contents i

Acronyms and Abbreviations ii

Overview of the Permit Modification Notification 1

Attachment A A-1
Table 1. Class 1* Hazardous Waste Facility Permit Modification Notification A-2

Item 1 . . . . . A-3
Description A-3
Basis A-3
Discussion A-3
Revised Permit Text A-4

Item 2 . . . . . A-6
Description A-6
Basis A-6
Discussion A-6
Revised Permit Text A-7

Attachment B A-9
Further Assessment of the Short-term Stability of the 12 Foot Explosion Isolation Wall

Acronyms and Abbreviations

CCD	Compliance Certification Decision
CFR	Code of Federal Regulations
DOE	Department of Energy
EPA	Environmental Protection Agency
HWDU	Hazardous Waste Disposal Unit
HWFP	Hazardous Waste Facility Permit
NMAC	New Mexico Administrative Code
NMED	New Mexico Environment Department
PCS	Panel Closure System
PMN	Permit Modification Notification
SMC	Salado Mass Concrete
VOC	Volatile Organic Compound
WPC	WIPP Panel Closure
WIPP	Waste Isolation Pilot Plant

Overview of the Permit Modification Notification

This document contains a Class 1* Permit Modification Notification (**PMN**) to the Hazardous Waste Facility Permit (**HWFP**) at the Waste Isolation Pilot Plant (**WIPP**), Permit Number NM4890139088-TSDF hereinafter referred to as the WIPP HWFP. This notification requires approval of the New Mexico Environment Department (**NMED**) prior to implementation

This PMN is being submitted by the U.S. Department of Energy (**DOE**) and Washington TRU Solutions, LLC, collectively referred to as the Permittees, in accordance with the WIPP HWFP, Condition I.B.1, 20.4.1.900 New Mexico Administrative Code (**NMAC**), Title 40 of the Code of Federal Regulations (**CFR**) § 270.42(a)). This change does not reduce the ability of the Permittees to continue to protect human health and the environment.

The modification to the WIPP HWFP and related supporting documents are provided in this PMN. The proposed modification to the text of the WIPP HWFP has been identified using a double underline and revision bar in the right hand margin for added information, and a ~~strikeout~~ font for deleted information. All direct quotations are indicated by *italicized* text.

Attachment A

Description of the Class 1* Permit Modification Notification

Table 1. Class 1* Hazardous Waste Facility Permit Modification Notification

No.	Affected Permit Section	Item	Category	Attach A Page #
1	a.1. Attachment I, Table I-1	Extension of the closure period for Panel Closure for Panel 3. Revise Table I-1 to update current anticipated operations end date, closure start date, and closure end date for Panel 3.	D.1.b	A-3
2	b.1. Attachment I, Table I-1	Further extension of the closure period for Panels 1 and 2. Revise Table I-1 to update current anticipated operations end date, closure start date, and closure end date for Panels 1 and 2 . Provides documentation that further extension of the closure period is protective of human health and the environment.	D.1.b	A-7

Item 1

Description:

This permit modification notification requiring approval of the NMED prior to implementation requests approval of an extension in the closure schedule for Panel 3.

Basis:

Panel 3 is the third hazardous waste disposal unit (**HWDU**) that will be closed under the WIPP HWFP. It is anticipated that the closure activities will not be completed within the 180 days provided in the Closure Plan (HWFP Attachment I).

Section 20.4.1.900 NMAC (incorporating 40 CFR § 270.42, Appendix I, Item D.1.b) classifies changes to the closure schedule, including extensions of the closure period, for any unit as a Class 1* consistent with 20.4.1.900 NMAC, incorporating 40 CFR § 270.42(a)(2).

Discussion:

The Closure Plan (Attachment I, Figure I-2) provides a general schedule for closing each WIPP HWDU (i.e., panel). The schedule estimates closing each panel 180 days after the completion of waste disposal operations in the panel. In addition, Attachment I, Table I-1, *Anticipated Earliest Closure Dates for the Underground HWDUs*, provides anticipated operations end, closure start, and closure end dates for each of the panels. The Permittees have identified the need to adjust these dates as discussed below.

Closure of Panels 1 and 2 has begun and 12 foot explosion isolation walls have been emplaced in the access drifts of the respective panels. Based on current schedules, disposal operations in Panel 3 will be completed in January of 2007. Therefore, this PMR proposes an extension in the closure period for Panel 3 by modifying Attachment I, Table I-1 to indicate the anticipated dates for the end of operations, the beginning of closure, and the end of closure for Panels 3 through 8.

As stated in Attachment I-1d(1), and in the schedule in Figure I-2, notification of intent to close occurs thirty (30) days before placing the final waste in a panel. Once a panel is full, the Permittees will initially block ventilation through the panel as described in Permit Attachment M2 and then will assess the closure area for ground conditions and contamination so that a definitive schedule and closure design can be determined.

The panel closure system (**PCS**) in the HWFP is also subject to the regulatory authority of the U.S. Environmental Protection Agency (**EPA**), which issued the WIPP Compliance Certification Decision (**CCD**), 63 Federal Register, 27354, May 18, 1998. The approved PCS, known as “Option D”, requires emplacing a 12-foot explosion isolation wall and a 26-foot monolith composed of Salado Mass Concrete (**SMC**). The DOE developed a design for a new PCS and submitted the proposed design as a Class 3 Permit Modification Request (**PMR**) to the NMED and a Planned Change Request to the EPA on October 7, 2002. The new PCS, referred to as the WIPP Panel Closure (**WPC**), consists of a substantial 30-foot mortared concrete block explosion isolation wall and emplacement of 100 feet of run of mine salt (salt obtained from routine mining activities in the WIPP

underground) as backfill. The new design is equally protective, less impactive to facility operations, and has a higher certainty of successful installation.

Simultaneous with this request for a schedule delay for Panel 3 the Permittees are submitting a new Class 3 PMR with provisions which allow for monitoring of explosive gases (e.g., methane) in filled panels behind a bulkhead ventilation barrier prior to installation of a panel closure. This PMN proposes to modify Attachment I, Table I-1 to reflect the proposed revision to the WIPP Panel Closure Schedule until such time as the NMED and EPA complete action on both the existing and new Class 3 PMRs and Planned Change Request respectively. It is anticipated that these decisions will occur within three (3) years of the submittal of the Class 3 PMR (November, 2006) and that three year period is reflected in the revised Attachment I, Table I-1.

The primary reason for the schedule change in this PMN is to reflect the time required for the NMED to evaluate and act upon the existing Class 3 PMR for the revised panel closure design and the new Class 3 Amended Closure Plan PMR and for EPA to assess impacts of the new design on its CCD.

Current shipping schedules indicate that Panel 3 will likely be ready for closure in January of 2007. The Permittees propose to initiate closure by installing the brattice cloth and chain link room barricade to block ventilation and conduct surveys of the openings as required in Attachment I, Section I-1d(1). This will continue to protect human health and the environment until NMED issues decisions on the Class 3 PMR. This protection is afforded by:

preventing access into Panel 3 and closing it to receipt of additional waste,

restricting releases of materials from the panel into the underground atmosphere,

continuing to monitor for volatile organic compounds in all of the closed rooms incorporating the existing action levels as specified in Permit Condition IV.F.3.b.

Note that this modification only addresses changes to the Panel 3 closure schedule. It does not specifically request a modification to the Closure Plan to include the bulkhead ventilation barrier and to perform monitoring for gases. That request is being made in the Class 3 PMR for the Amended Closure Plan.

Revised Permit Text:

a.1. Table I-1

TABLE I-1
ANTICIPATED EARLIEST CLOSURE DATES FOR
THE UNDERGROUND HWDUs

HWDU	OPERATIONS START	OPERATIONS END	CLOSURE START	CLOSURE END
PANEL 1	3/99	2/03	3/03	~~9/03~~ SEE NOTE 5
PANEL 2	3/03	6/05	7/05	~~1/06~~ SEE NOTE 5
PANEL 3	7/05	~~11/06~~ 1/07	~~12/06~~ 2/07	~~6/07~~ SEE NOTE 6
PANEL 4	~~11/06~~ 1/07	~~6/08~~ 9/08	~~7/08~~ 10/08	~~1/09~~ 4/09
PANEL 5	~~6/08~~ 7/08	~~11/09~~ 8/10	~~12/09~~ 9/10	~~6/10~~ 3/11
PANEL 6	~~11/09~~ 6/10	~~2/11~~ 8/12	~~3/11~~ 9/12	~~9/11~~ 3/13
PANEL 7	~~2/11~~ 6/12	~~6/12~~ 5/15	~~7/12~~ 6/15	~~1/13~~ 12/15
PANEL 8	~~6/12~~ 1/15	~~1/14~~ 2/19	~~2/14~~ 3/19	~~8/14~~9/19
PANEL 9	1/14	1/28	2/28	SEE NOTE 4
PANEL 10	1/28	9/30	10/30	SEE NOTE 4

NOTE 1: Only Panels 1 to 7 will be closed under the permit covered by this application. Closure schedules for Panels 8 through 10 are projected assuming new permits will be issued in 2009 and 2019.

NOTE 2: The point of closure start is defined as sixty (60) days following notification to the NMED of closure.

NOTE 3: The point of closure end is defined as one hundred eighty (180) days following placement of final waste in the panel.

NOTE 4: The time to close these areas may be extended depending on the nature and extent of the disturbed rock zone. The excavations that constitute these panels will have been opened for as many as forty (40) years so that the preparation for closure may take longer than the time allotted in Figure I-2. If this extension is needed, it will be requested as an amendment to the Closure Plan.

NOTE 5: The anticipated closure end date for Panels 1 and 2 is for installation of the 12-foot explosion isolation wall. Final closure of Panels 1 and 2 will be completed as specified in this Permit ~~no later than five years after completion of their respective explosion isolation wall.~~

NOTE 6: The anticipated closure end date for Panel 3 is for initially blocking ventilation through the closed panel. Final Closure of Panel 3 shall be completed as specified in this Permit.

Item 2

Description:

This permit modification notification requests approval of an extension of the closure schedule for Panels 1 and 2.

Basis:

Panels 1 and 2 are the first two hazardous waste disposal units (**HWDU**s) that will be closed under the WIPP HWFP. It is anticipated that the closure activities will not be completed within the 180 days provided in the Closure Plan (HWFP Attachment I).

Section 20.4.1.900 NMAC (incorporating 40 CFR § 270.42, Appendix I, Item D.1.b) classifies changes to the closure schedule, including extension in the schedule for closure for any unit as a Class 1* consistent with 20.4.1.900 NMAC, incorporating 40 CFR § 270.42(a)(2).

Discussion:

The Closure Plan (Attachment I, Figure I-2) provides a general schedule for closing each WIPP HWDU (i.e., panel). The schedule estimates closing each panel 180 days after the completion of waste disposal operations in the panel. In addition, Attachment I, Table I-1, *Anticipated Earliest Closure Dates for the Underground HWDUs*, provides operations end, closure start, and closure end dates for each of the panels.

Closure of Panels 1 and 2 has begun with the construction of 12 foot explosion isolation walls which have been emplaced in the access drifts of the respective panels. Two previous, individual permit modification notifications requesting approval of an extension in the closure schedule for Panels 1 and 2 were approved by the NMED. These permit modification notifications requested extension in the closure schedule between completion of the 12-foot explosion isolation wall and the completion of panel closure. This extension provided the NMED and EPA time to consider a Class 3 permit modification request and Planned Change Request respectively proposing a redesign of the panel closure system (**PCS**). The 12' explosion isolation walls have been constructed in the respective panels.

In granting the previous closure schedule delays for Panels 1 and 2, the NMED allowed for five years upon completion of the 12' explosion isolation wall for the Permittees to complete final panel closure. It does not appear the final agency action will be completed before the end of these five year periods Therefore, the Permittees are seeking additional time to complete final panel closure as proposed in the attached modification to Attachment I, Table I-1. The attached report (Attachment B) entitled:"*Further Assessment of the Short Term Stability of the 12 Foot Explosion Isolation Wall*", dated June 30, 2006, indicates that the explosion isolation will be stable for at least three more years. This should be a sufficient amount of time for the agencies to act upon both Class 3 PMRs and Planned Change Request respectively. Therefore, the Permittees are requesting a three year extension from the date of this submittal prior to initiating final closure in Panels 1 and 2.

Revised Permit Text:

b.1 Table I-1

TABLE I-1
ANTICIPATED EARLIEST CLOSURE DATES FOR THE UNDERGROUND HWDUs

HWDU	OPERATIONS START	OPERATIONS END	CLOSURE START	CLOSURE END
PANEL 1	3/99	2/03	3/03	~~9/03~~ SEE NOTE 5
PANEL 2	3/03	6/05	7/05	~~1/06~~ SEE NOTE 5
PANEL 3	7/05	~~11/06~~ 1/07	~~12/06~~ 2/07	~~6/07~~ SEE NOTE 6
PANEL 4	~~11/06~~ 1/07	~~6/08~~ 9/08	~~7/08~~ 10/08	~~1/09~~ 4/09
PANEL 5	~~6/08~~ 7/08	~~11/09~~ 8/10	~~12/09~~ 9/10	~~6/10~~ 3/11
PANEL 6	~~11/09~~ 6/10	~~2/11~~ 8/12	~~3/11~~ 9/12	~~9/11~~ 3/13
PANEL 7	~~2/11~~ 6/12	~~6/12~~ 5/15	~~7/12~~ 6/15	~~1/13~~ 12/15
PANEL 8	~~6/12~~ 1/15	~~1/14~~ 2/19	~~2/14~~ 3/19	~~8/14~~9/19
PANEL 9	1/14	1/28	2/28	SEE NOTE 4
PANEL 10	1/28	9/30	10/30	SEE NOTE 4

NOTE 1: Only Panels 1 to 7 will be closed under the permit covered by this application. Closure schedules for Panels 8 through 10 are projected assuming new permits will be issued in 2009 and 2019.

NOTE 2: The point of closure start is defined as sixty (60) days following notification to the NMED of closure.

NOTE 3: The point of closure end is defined as one hundred eighty (180) days following placement of final waste in the panel.

NOTE 4: The time to close these areas may be extended depending on the nature and extent of the disturbed rock zone. The excavations that constitute these panels will have been opened for as many as forty (40) years so that the preparation for closure may take longer than the time allotted in Figure I-2. If this extension is needed, it will be requested as an amendment to the Closure Plan.

NOTE 5: The anticipated closure end date for Panels 1 and 2 is for installation of the 12-foot explosion isolation wall. Final closure of Panels 1 and 2 will be completed as specified in this Permit ~~no later than five years after completion of their respective explosion isolation wall.~~

NOTE 6: The anticipated closure end date for Panel 3 is for initially blocking ventilation through the closed panel. Final Closure of Panel 3 shall be completed as specified in this Permit.

Attachment B

Further Assessment of the Short-term Stability of the 12 Foot Explosion Isolation Wall

(Report Attached in the pdf Version of This Modification)

Further Assessment of the Short-term Stability of the 12 Foot Explosion Isolation Wall

June 30, 2006

Prepared for

Washington TRU Solutions, LLC
Waste Isolation Pilot Plant
Carlsbad, New Mexico

Prepared by

RockSol Consulting Group, Inc.
Boulder, Colorado

Certification

I certify under penalty of law that this document was prepared under my supervision for Washington TRU Solutions, LLC, under the RockSol Consulting Group, Inc. Quality Assurance Program. This quality assurance program is designed to assure that qualified personnel properly gather and evaluate the information submitted. Based on my inquiry of the persons directly responsible for gathering the information, the information submitted is, to the best of my knowledge and belief, true, accurate, and complete.

Saeid Saeb, Ph.D., P.E.
New Mexico
Certification No. 11777
Expires December 31, 2007

1 Introduction

The Waste Isolation Pilot Plant (WIPP), located near Carlsbad, New Mexico, was established for the safe disposal of defense-generated transuranic waste. One important repository operation of the WIPP is the closure of waste disposal panels. Each panel consists of access drifts and seven rooms (Figure 1). The closure of individual panels during the operational period must be accomplished within conditions stated in the Hazardous Waste Facility Permit (HWFP).

The original panel closure system design is contained in a report entitled "Detailed Design Report for an Operational Phase Panel-Closure System" (DOE, 1996). This report was attached to the HWFP Application as Attachment I1. The HWFP issued in October 1999 reflects Option D as described in DOE, 1996, with certain changes in the Technical Specifications. Option D consists of a 12 foot long explosion isolation wall and a concrete monolith. The explosion isolation wall was intended to provide isolation from the temperature and pressure effects of a methane gas explosion during installation of the monolith portion of Option D.

A Class 3 Permit Modification Request (PMR) for a revision of the panel closure system design has been submitted. The revised WIPP Panel Closure (WPC) system (DOE, 2002) consists of a 30 foot long mortared concrete block, explosion isolation wall and 100 feet of run of mine salt backfill. The implementation of the WPC design requires submittal and approval of this PMR for the HWFP, and was determined through discussions with the New Mexico Environment Department (NMED) and interested parties that a period of up to five years may be required to complete the PMR process.

Waste disposal operations in Panel 1 finished in early March 2003 and a Class 1* PMR was submitted in November 2002 requesting an extension of time to perform closure of Panel 1 while NMED acted upon the Class 3 PMR. In the Class 1* PMR, it was proposed to emplace the 12 foot explosion isolation wall component of the Option D design that is in the current HWFP using 5000 psi concrete blocks. A December, 2002 report entitled "Assessment of the Short-term Stability of the 12 Foot Explosion Isolation Wall" which included a structural analysis of the stability of the walls in Panel One for a period of 5 years was provided in support of the Class 1* PMR. The Class 1* PMR was approved in December 2002 for a period of 5 years and explosion isolation walls were built to the configuration in the current HWFP using the mortared 5000 psi concrete block specifications from the WPC design. NMED has since stated that it will not be able to complete the PMR process for the revised Panel Closure system within the initial five year period.

This report extends the structural analysis of the walls to ten years after installation. In addition, the performance to date of the wall is also analyzed and incorporated into the assessment.

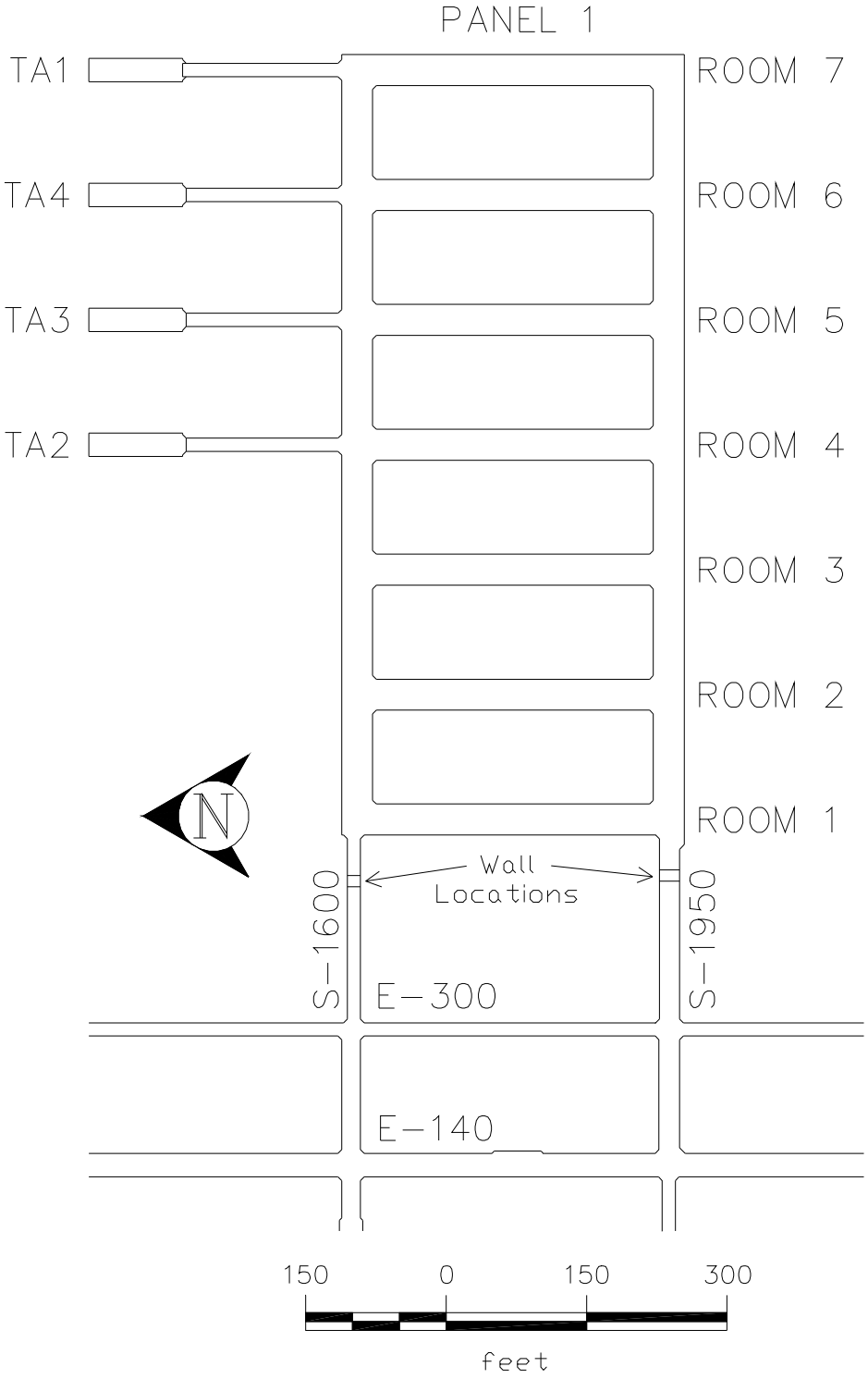

Figure 1. Panel 1 layout with wall locations.

2 Stability Assessment

The American Concrete Institute (ACI) publication ACI 318, Building Code and Commentary, provides guidance for Strength Evaluation of Existing Structures in Part 6, Chapter 20. The ACI Code allows for extended service life of a concrete structure if it is periodically re-evaluated. The ACI calls for performing load testing, numerical analyses, and monitoring to determine the acceptability for service of existing structures such as the temporary explosion walls constructed for the closed WIPP underground panels. Because of the difficulties involved in monitoring the physical performance of the walls, for example coring them to obtain stress measurements, the assessment is essentially limited to analyses and field monitoring. However, the detailed and comprehensive specifications, the intensive construction inspection, and external verification give confidence that necessary calculations can be performed based on actual field conditions.

2.1 Stress Analysis

The purpose of performing a stress analysis is to evaluate the interaction of the explosion isolation wall with the surrounding salt. Stresses are expected to develop in the wall due to continued creep closure of the air-intake and air-exhaust drifts after installation of the wall. The wall may also be subjected to stresses from a postulated methane explosion.

2.1.1 Previous Modeling

For the 2002 analysis, detailed two-dimensional axisymmetric representations of the explosion isolation wall were developed using the FLAC (Itasca, 2000) computer code. The models did not account for the local geologic features such as clay seams and the thick anhydrite MB139 in the floor. The effects of nearby excavations, such as Room 1, were also ignored. Finally, the wall was modeled as a cylinder equivalent to its true shape. These simplifications were necessary because development and execution of a three-dimensional model was not practical or economic at that time.

Three cases were run for the 2002 exercise with different loadings as called for by the ACI Ultimate Strength Design Method (ACI 318-02). The results of these cases showed that while some failure occurs on the exposed surfaces of the explosion isolation wall, the wall maintains a sizeable intact confined core in every case.

2.1.2 New Modeling

In the current exercise, FLAC3D (Itasca, 2004) was used to develop three-dimensional representations of the walls and the surrounding excavations. The as-built locations of the walls in the South 1600 and South 1950 drifts were used. Clay seams E, G, and H were modeled along with Marker Bed 139. The rest of the rock was modeled as halite. Because the continued stability of an existing structure is assessed, only the service load (in-situ loading) case was run for each wall. A strength reduction factor of 0.8 was used, as in the previous models. The nominal postulated methane explosion based on likely gas accumulation in a closed panel (DOE, 2002) was applied to each wall at five and ten

years after wall installation. Figures 2 and 3 show the geometry of the South 1950 and South 1600 drift wall models. The models use the same material properties presented in Appendix C of the WPC report.

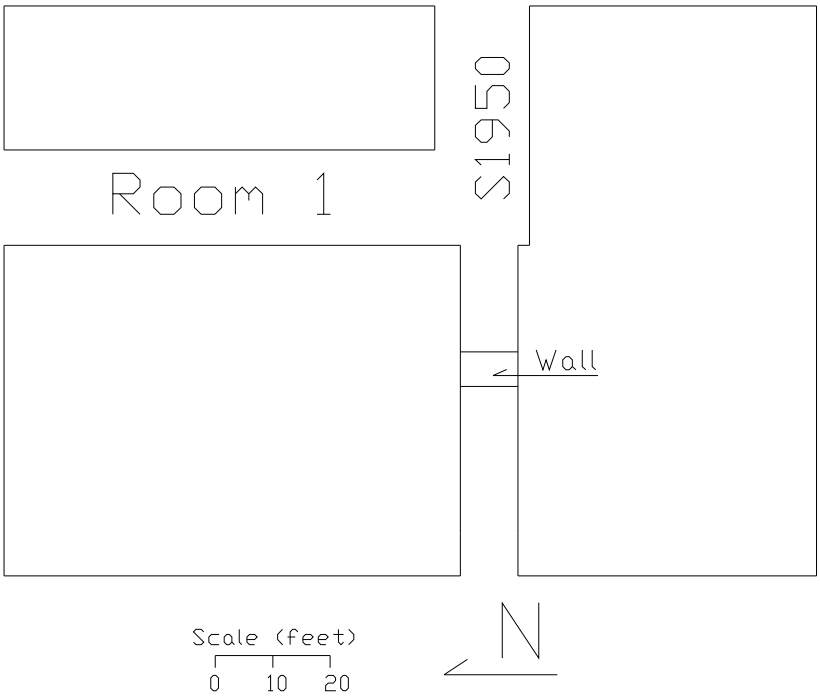

Figure 2. South 1950 wall model extents.

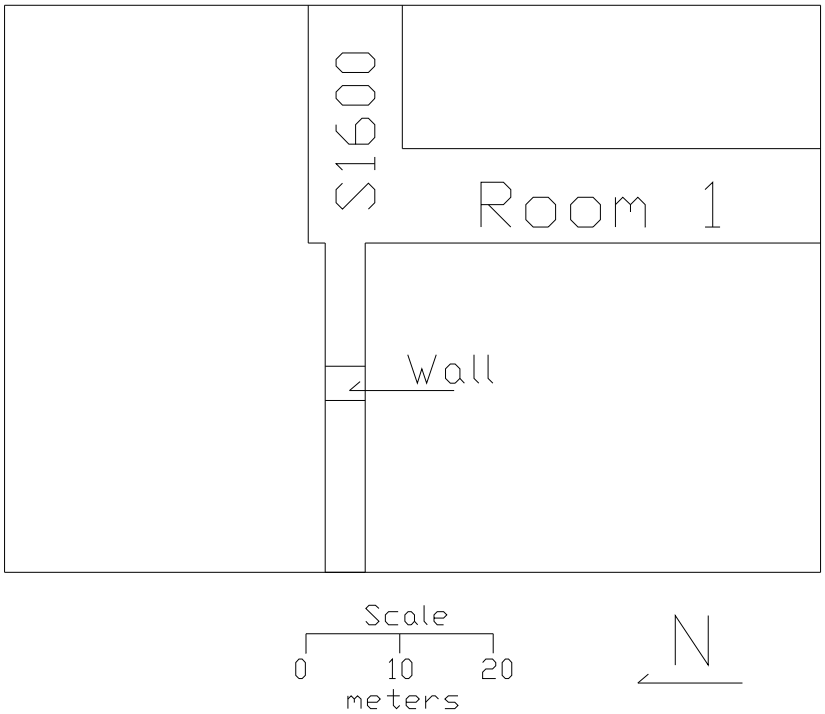

Figure 3. South 1600 wall model extents.

2.1.2.1 New Model Results

The results from the new models are similar to those of the 2002 cases. After wall installation, stress builds up over several years as the creep pressures increase. Plots of maximum principal stress at each end and in the center of the walls are shown in Figures 4 and 5. Stresses on the outside edges of the walls are higher than at the center due to edge effects. Figures 6 to 11 show plasticity shear failure state in the walls. In the figures the walls are cut on east-west cross-sections through the center of the two walls and only half the wall is shown for clarity. The dark blue zones have not failed. All other zones are either failed at the model time shown or have failed in the past. In all cases there is a thin zone of failure near the ribs and free faces that slowly migrates inward with time. Figures 8 and 11 show the state at ten years combined with the nominal explosion. Even in the cases with explosions, more than half the width of the walls remains intact after ten years. Also note that the conditions for three years after installation closely match field observations as discussed in Section 2.2.

Because more than half the width of the walls is still intact after ten years, the model results indicate that the wall will continue to perform its design functions for at least ten years after installation.

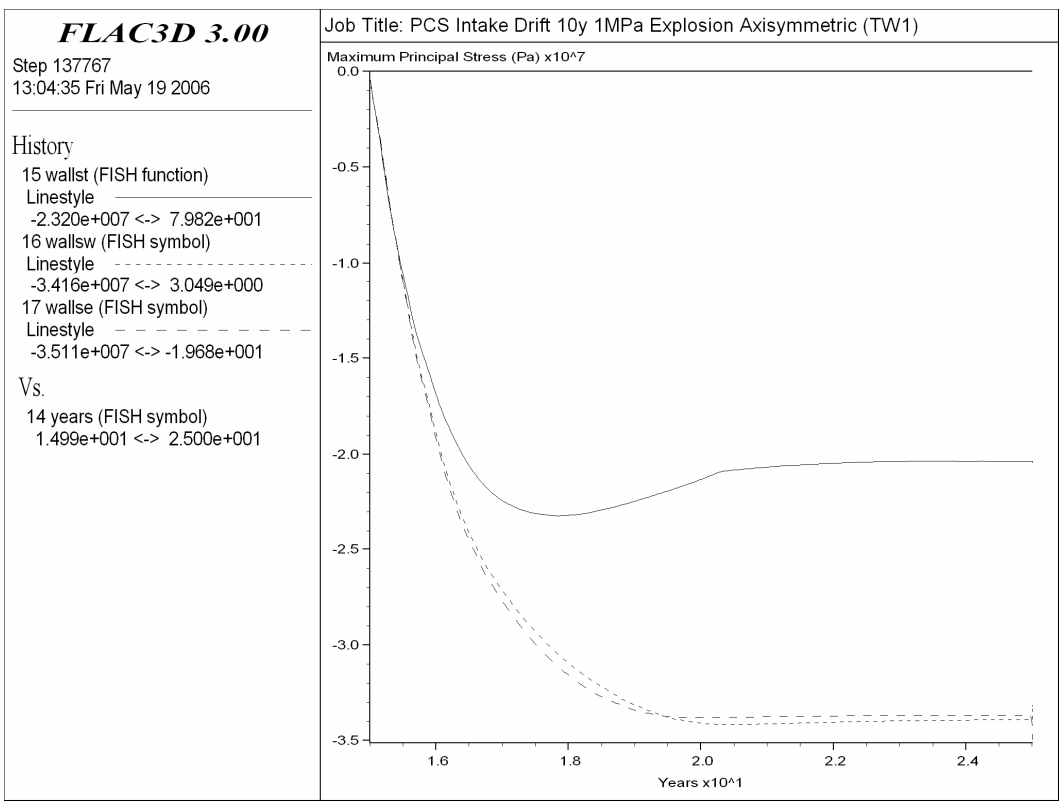

Figure 4. Maximum principal stress histories at the center of the wall (wallst), center of the west face (wallstw) and center of the east face (wallste).

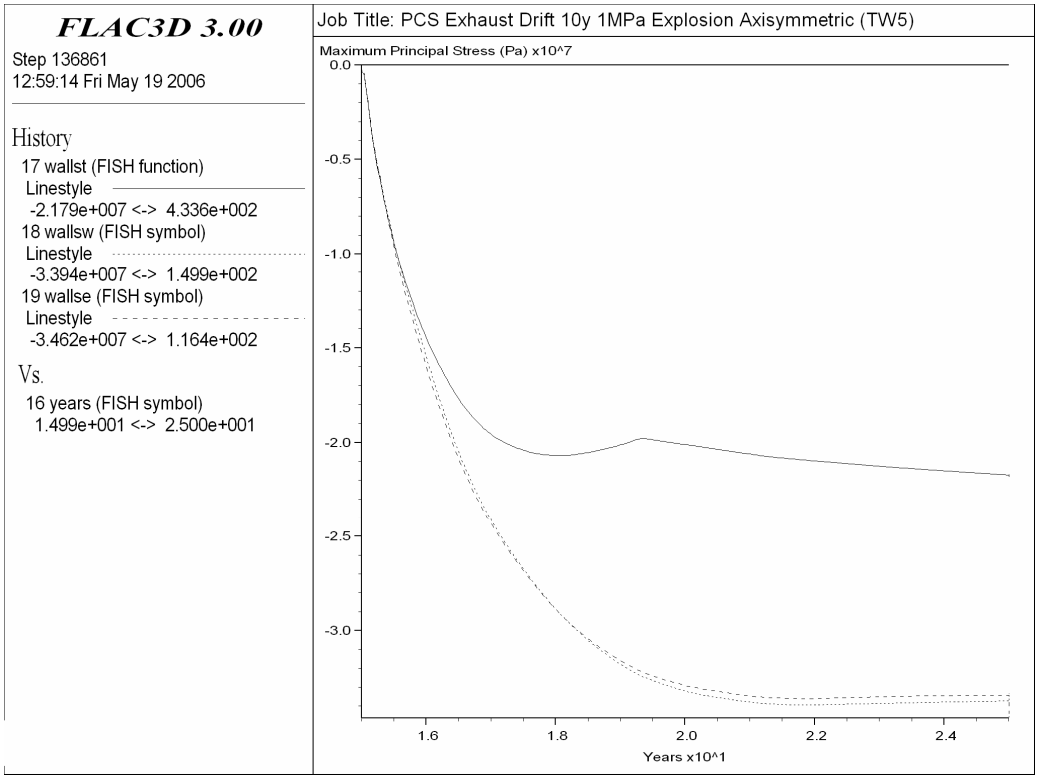

Figure 5. Maximum principal stress histories at the center of the wall (wallst), center of the west face (wallstw) and center of the east face (wallste)

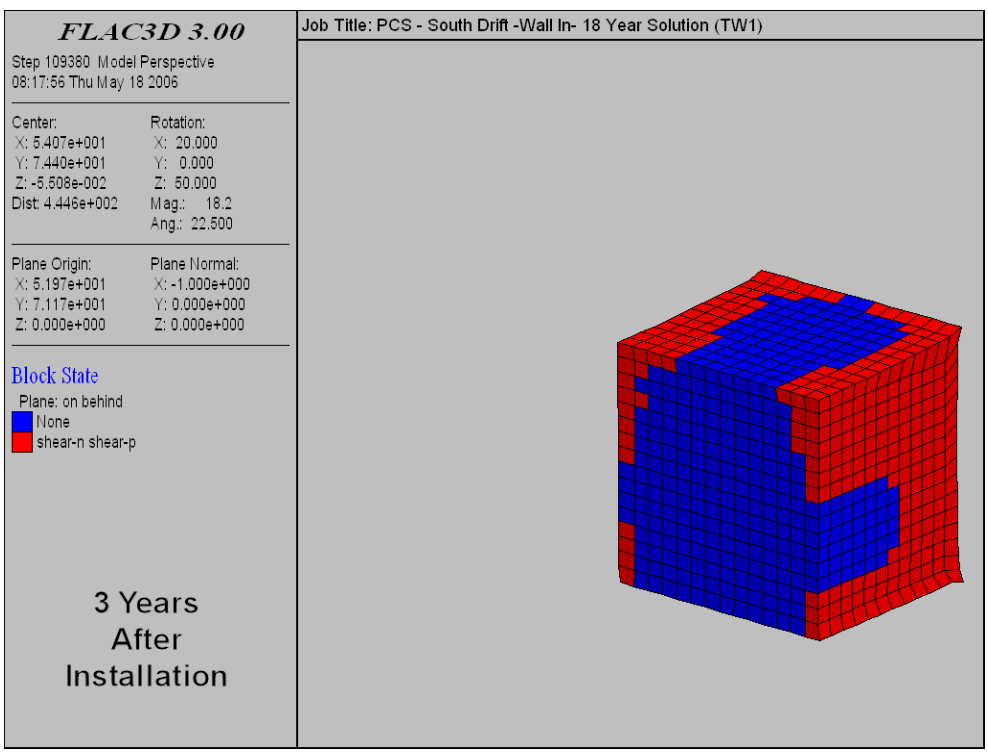

Figure 6. Shear failure in South 1950 wall three years after installation.

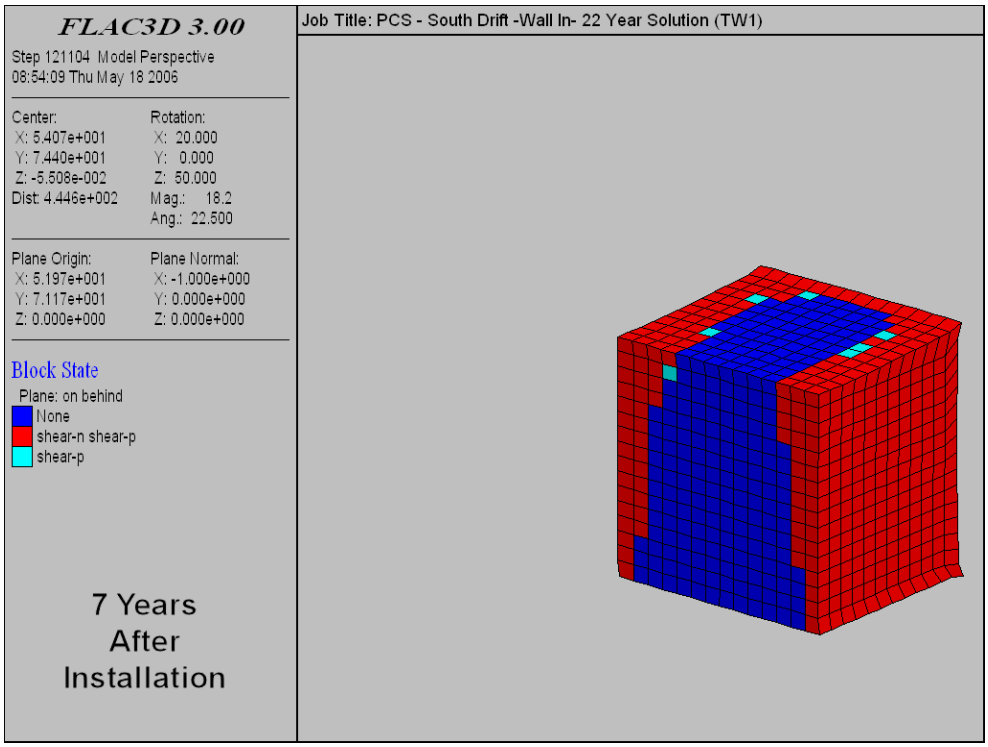

Figure 7. Shear failure in South 1950 wall seven years after installation.

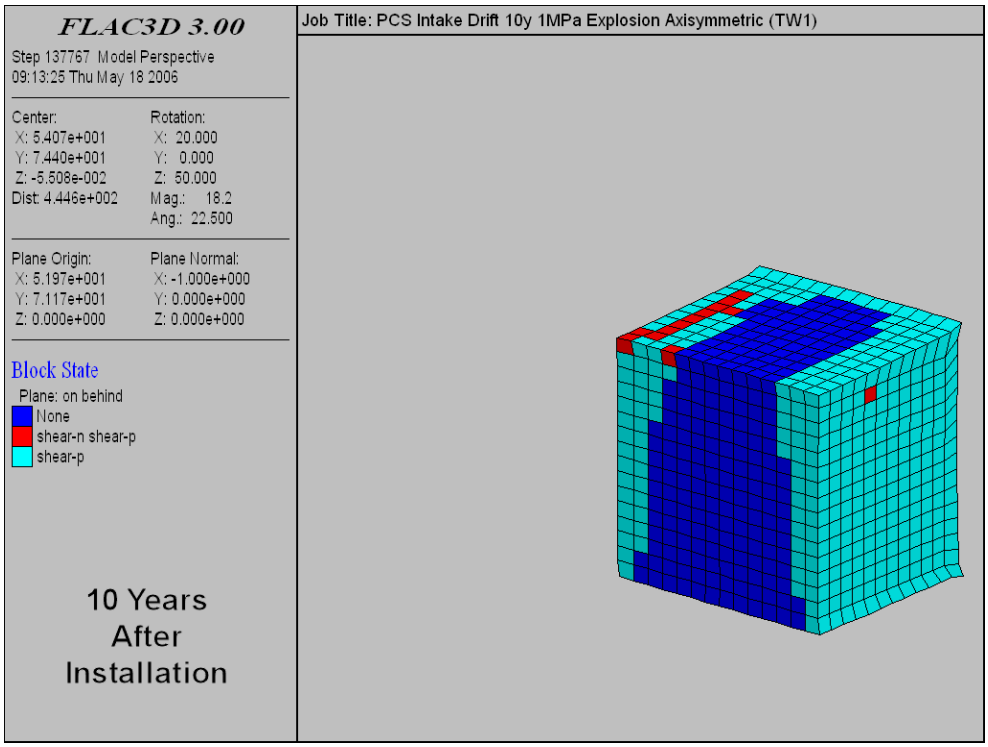

Figure 8. Shear failure in South 1950 wall with explosion at ten years after installation.

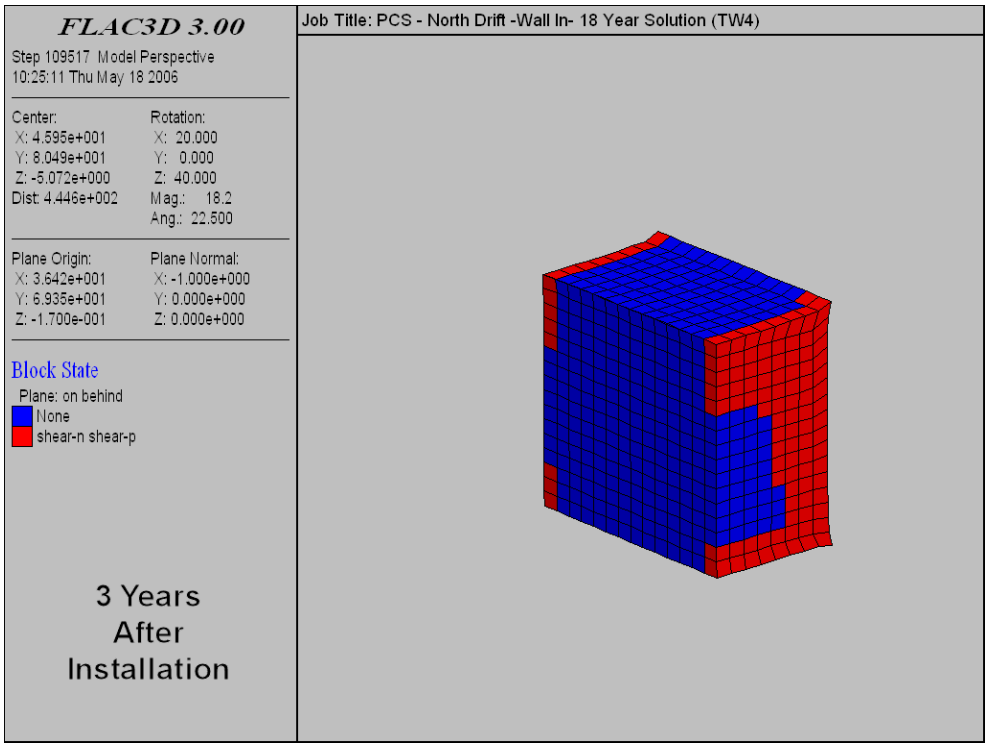

Figure 9. Shear failure in South 1600 wall three years after installation.

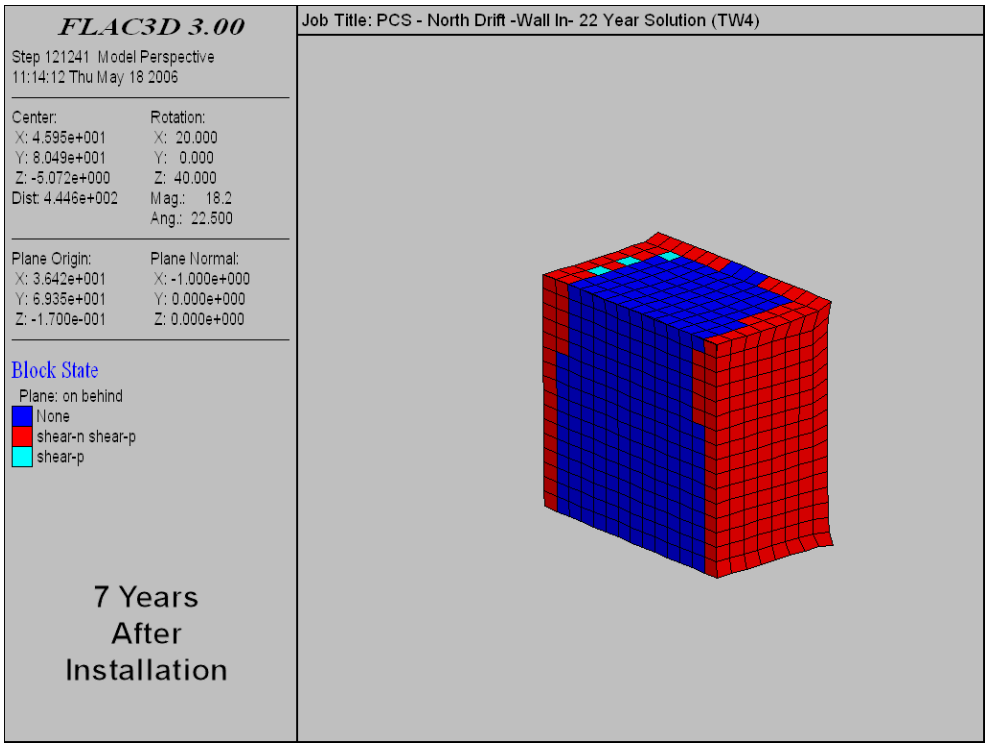

Figure 10. Shear failure in South 1600 wall seven years after installation.

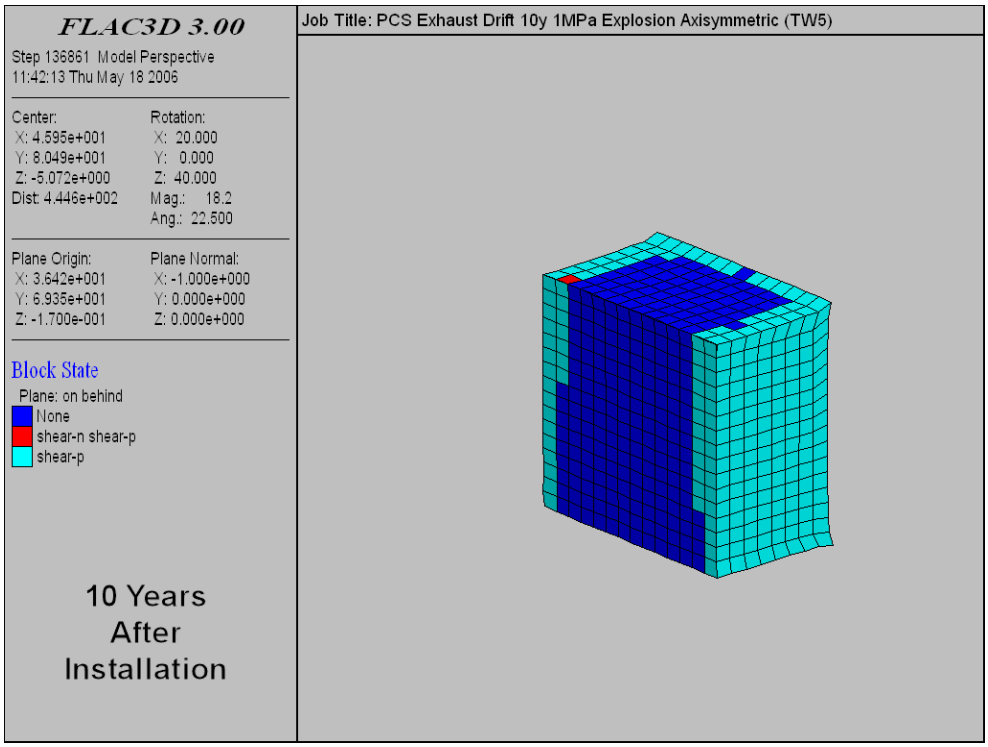

Figure 11. Shear failure in South 1600 wall with explosion at ten years after installation.

2.2 Assessment of Field Data

To assess the stability of existing concrete structures, ACI recommends regular observation and tracking of fractures on the surface of the structures. The location and aperture of all fractures on the wall should be noted. The ACI code states that any indication of shear displacement along the fractures should be noted as this is indicative of potential failure.

At an inspection held on May 22, 2006, the walls were found to have minor cracking at some corners and a few surficial spalls were also noted. These are most likely a result of differential loading caused by a non-perfect initial contact and would be expected to stabilize quickly after the initial cracking occurred. Otherwise, the walls show no signs of bulging or spalling away from the edges. On the basis of direct observations, the walls appear to be in near pristine condition with no signs of failure.

Closure data from radial convergence (RC) points near the wall indicate that the walls are in a state of equilibrium with the rock. After a settling in period of a few months (during which the edge cracks probably formed as the block to rock interface was established), rock displacement rates near the wall have remained steady since wall installation. These steady convergence rates (i.e. the lack of variation or trend toward increasing convergence) indicate that there is little if any change in the load that is borne by the wall as opposed to the rock pillars, which again is an indication that there has been no wall

failure to date. Figures 12 to 15 show closure data from the field compared to FLAC3D model results.

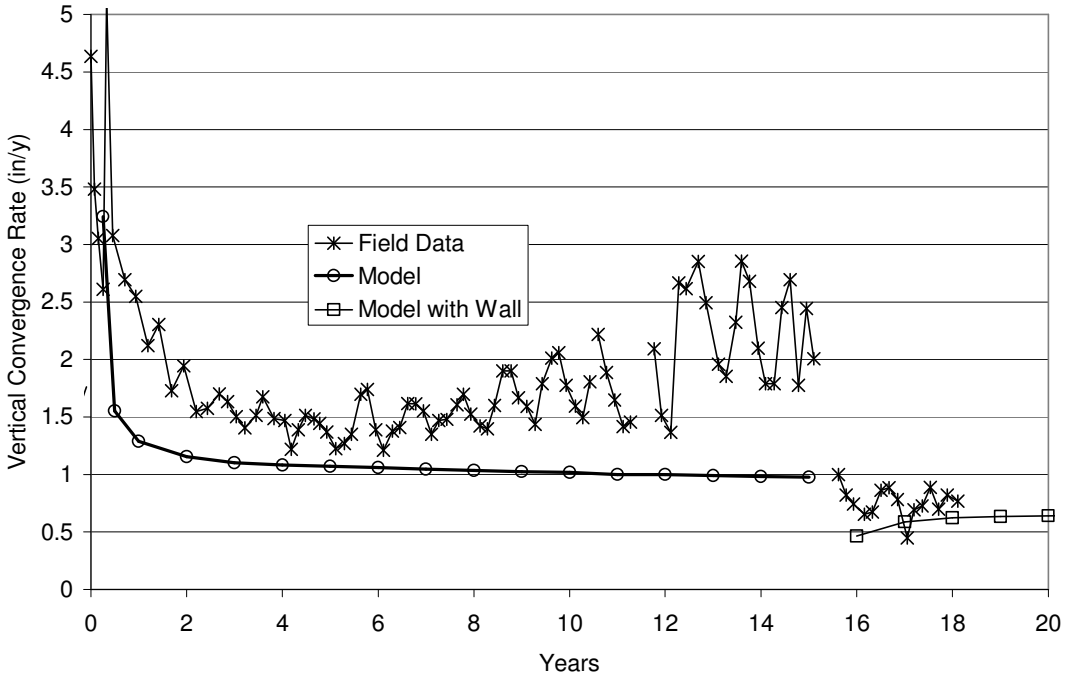

Figure 12. Field and model vertical convergence from RC 5' west of S1950 wall

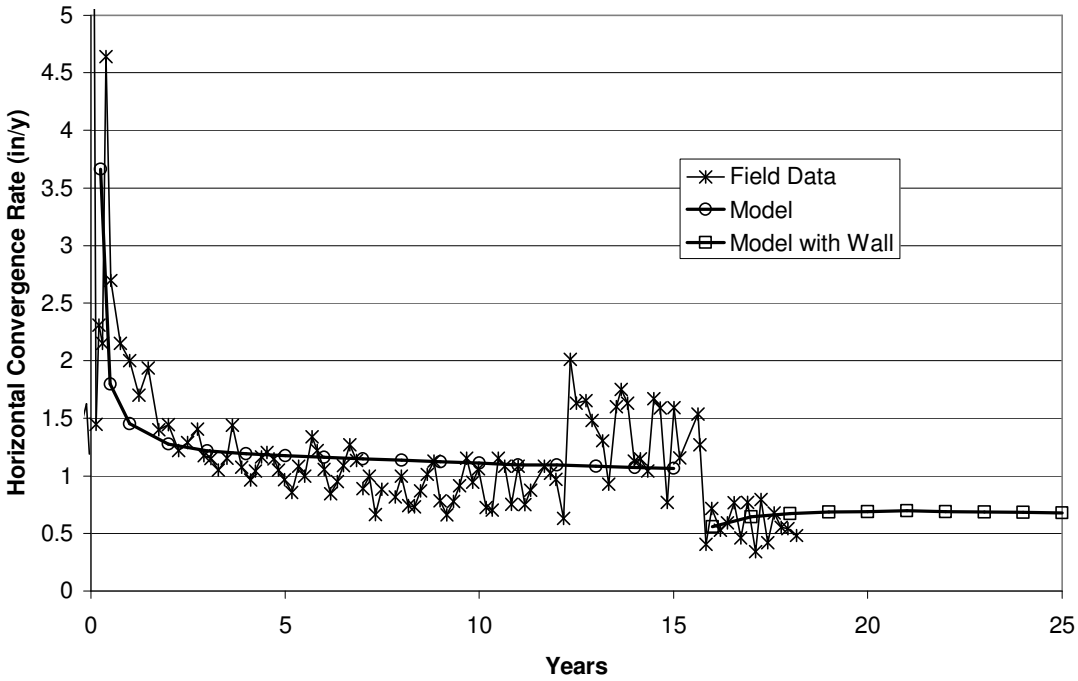

Figure 13. Field and model horizontal convergence from RC 5' west of S1950 wall.

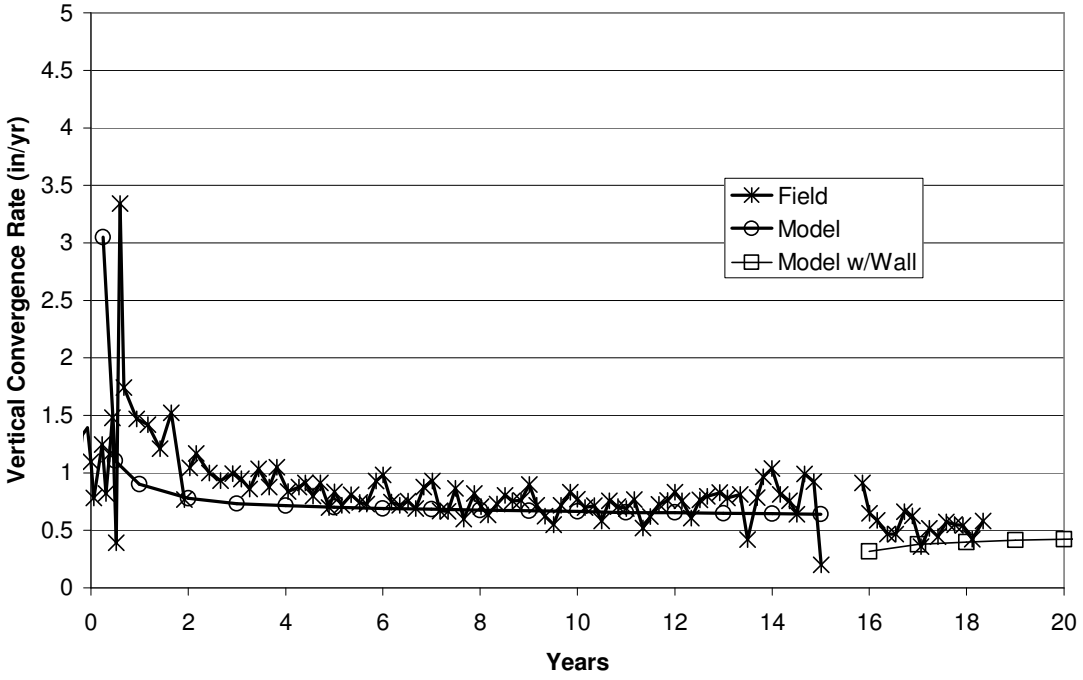

Figure 14. Field and model vertical convergence from RC 5' west of S1600 wall.

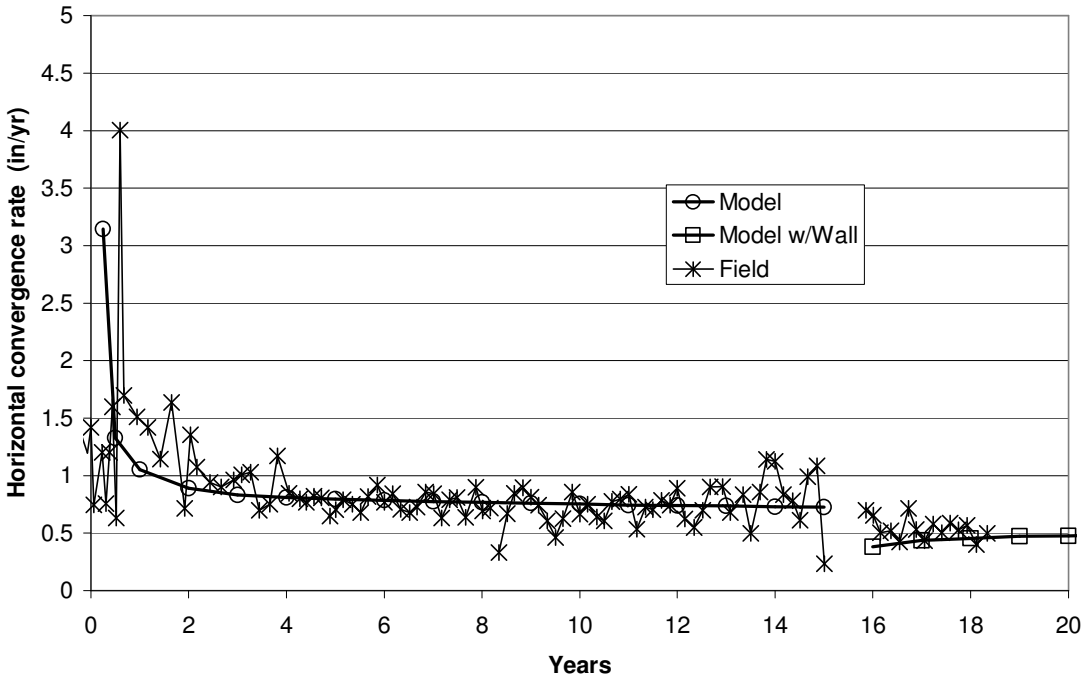

Figure 15. Field and model horizontal convergence from RC 5' west of S1600 wall.

The fracture and closure field data indicate that the wall currently is stable. After three years there is only superficial damage. This indicates that the wall is meeting or exceeding its designed performance. The model results for the wall state at three years after installation are very similar to the field performance, only showing superficial damage at that time. The current field performance of the wall supports the conclusion from the model results that the wall will remain stable for at least ten years total. However, the field data should be regularly reassessed to ascertain that this remains true.

3 Monitoring

Until such time as final closures are installed, the walls should be regularly inspected and re-evaluated by a professional engineer. This can be incorporated into the Geotechnical Engineering monitoring programs using existing procedures for fracture mapping and RC reading. Reporting of the inspections can also be incorporated into existing periodical Geotechnical Engineering reports such as the "Geotechnical Analysis Report."

4 Conclusions

This report assesses performance to date and the likely future performance of the explosion isolation walls for Panel 1 over a period of up to ten years using the ACI guidance for assessing the stability of existing concrete structures. The explosion isolation walls currently installed in Panel 1 continue to perform their design function and are expected to remain stable and perform their intended functions for at least ten years total (seven additional years). Because wall conditions may vary from the model results in the future due to unforeseen circumstances, as well as to provide a margin of safety, the wall should be re-evaluated within three years --- sooner if field performance varies from the past. The three year period is based on the performance of the wall over the last three years. The wall is therefore accepted through this assessment as competent at this time only for three more years, at which point it will be re-evaluated. Future evaluations will likely further extend the life of the wall. This is based on numerical analyses using the as-built conditions and on field measurements and observations.

5 References

American Concrete Institute (ACI), 2002, "Building Code Requirements for Structural Concrete and Commentaries," ACI 318-02, American Concrete Institute, Farmington Hills, Michigan.

Itasca Consulting Group, Inc. (Itasca), 2003, "FLAC3D User's Guide," Itasca Consulting Group, Inc., Minneapolis, Minnesota.

Itasca Consulting Group, Inc. (Itasca), 2000, "FLAC User's Manual, "Itasca Consulting Group, Inc., Minneapolis, Minnesota.

U.S. Department of Energy, 1996, "Detailed Design Report for an Operational Phase Panel-Closure System," DOE/WIPP 96-2150.

U.S. Department of Energy, 2002, "Design Report for a Revised Panel Closure System at the Waste Isolation Pilot Plant," Report Prepared for Westinghouse TRU Solutions, LLC by RockSol Consulting Group, Inc. under Purchase Order Number 3164.