Department of Energy
Carlsbad Field Office
P. O. Box 3090
Carlsbad, New Mexico 88221

July 5, 2012

Mr. John Kieling, Chief
Hazardous Waste Bureau
New Mexico Environment Department
2905 Rodeo Park Drive East, Building 1
Santa Fe, New Mexico 87505-6303

Subject: Notification of Class 2 Permit Modification Request to the Hazardous Waste Facility Permit, Number: NM4890139088-TSDF

Dear Mr. Kieling:

Enclosed is the following Class 2 Permit Modification Request:

- Addition of a Shielded Container

We certify under penalty of law that this document and the attachments were prepared under our direction or supervision in accordance with a system designed to assure that qualified personnel properly gather and evaluate the information submitted. Based on our inquiry of the person or persons who manage the system, or those persons directly responsible for gathering the information, the information submitted is, to the best of our knowledge and belief, true, accurate, and complete. We are aware that there are significant penalties for submitting false information, including the possibility of fine and imprisonment for knowing violations.

If you have any questions, please contact Mr. George T. Basabilvazo at (575) 234-7488.

Sincerely,

//signature on file//

Jose R. Franco, Manager
Carlsbad Field Office

//signature on file//

M. F. Sharif, General Manager
Washington TRU Solutions LLC

Enclosure

cc: w/enclosure

T. Kliphuis, NMED	*ED
J. Davis, NMED	ED
C. Walker, Trinity Engineering	ED

*ED denotes electronic distribution

Class 2 Permit Modification Request

Addition of a Shielded Container

Waste Isolation Pilot Plant
Carlsbad, New Mexico

WIPP Permit Number - NM4890139088-TSDF

July 2012

Table of Contents

Transmittal Letter

Table of Contents.....ii
Acronyms/Abbreviations/Units iii
Overview of the Permit Modification Request..... 1
Regulatory Crosswalk 14
Appendix A Table of Changes.....A-1
Table of Changes.....A-3
Appendix B Proposed Revised Permit Text.....B-1
Proposed Revised Permit Text:.....B-3
Appendix C C-1
Appendix D D-1

Acronyms/Abbreviations/Units

AK	Acceptable Knowledge
CFR	Code of Federal Regulations
CH	Contact-Handled
DAC	Drum Age Criteria
DOE	U.S. Department of Energy
DOT	U.S. Department of Transportation
EPA	U.S. Environmental Protection Agency
ft	feet
gal	gallon
HWDU	Hazardous Waste Disposal Unit
L	Liter
lbs	pounds
LWA	Land Withdrawal Act
m^3	cubic meters
mrem/h	millirem per hour
NMAC	New Mexico Administrative Code
NMED	New Mexico Environment Department
NRC	Nuclear Regulatory Commission
Permit	Hazardous Waste Facility Permit
PMR	Permit Modification Request
RCRA	Resource Conservation and Recovery Act
RH	Remote-Handled
TRU	transuranic
TSDF	Treatment, Storage and Disposal Facility
VHS	Vent Hood System
WHB	Waste Handling Building
WIPP	Waste Isolation Pilot Plant
WTS	Washington TRU Solutions LLC
WWIS	WIPP Waste Information System

Overview of the Permit Modification Request

This document contains one Class 2 Permit Modification Request (**PMR**) for the Waste Isolation Pilot Plant (**WIPP**) Hazardous Waste Facility Permit (**Permit**) Number NM4890139088-TSDF.

This PMR is being submitted by the U.S. Department of Energy (**DOE**) Carlsbad Field Office and Washington TRU Solutions LLC (**WTS**), collectively referred to as the Permittees, in accordance with the Permit, Part 1, Section 1.3.1. (20.4.1.900 New Mexico Administrative Code (**NMAC**) incorporating Title 40 Code of Federal Regulations (**CFR**) §270.42(b)). The modification provides for the following changes:

- addition of a new shielded container for managing Remote-Handled (**RH**) transuranic (**TRU**) mixed waste as Contact-Handled (**CH**) TRU mixed waste since it meets the surface dose rate of CH TRU mixed waste,
- description of how the volume of RH TRU mixed waste which is disposed in shielded containers will be tracked, and,
- related changes to waste handling descriptions.

The shielded container will be used to package RH TRU mixed waste that is approved for shipment to the WIPP facility for disposal and meets the surface dose requirements, once packaged, of CH TRU mixed waste.

These changes do not reduce the ability of the Permittees to provide continued protection to human health and the environment.

The requested modification to the Permit and related supporting documents are provided in this PMR. The proposed modification to the text of the Permit has been identified using red text and a double underline and a ~~strikeout~~ font for deleted information. All direct quotations are indicated by italicized text. The following information specifically addresses how compliance has been achieved with the Permit Part 1, Section 1.3.1. for submission of this Class 2 PMR.

1. 20.4.1.900 NMAC (incorporating 40 CFR 270.42(b)(1)(i)) requires the applicant to describe the exact change to be made to the permit conditions and supporting documents referenced by the Permit.

The Permittees are proposing to add a new payload container to the Permit which is designated as a shielded container (shown in Figure 1). This container is similar in size to a standard 55-gallon drum. The shielded container body side wall is constructed of an approximately 3/16-in. inner steel shell, an approximately 1-in. middle layer of lead, and an approximately 1/8-in. outer steel shell. The shielded container lid and base are each constructed of approximately 3-in. steel plate. The lid is bolted on. A gasket of silicone rubber is utilized for lid closure. The empty weight of the shielded container is approximately 1,726 pounds. The shielded container accommodates a 30-gallon steel drum which will contain RH TRU mixed waste. Both the shielded container and its 30-gallon steel drum are vented in accordance with transportation requirements. The shielded container vent port includes a lead shield plug. Although the 30-gallon drum will be packaged with RH TRU mixed waste, the lead construction of the shielded

container will reduce the surface dose rate at the outer surface to less than 200 millirem per hour (mrem/hr), allowing the container to be handled as CH TRU mixed waste.

The WIPP Land Withdrawal Act (**LWA**) also referred to as Public Law 102-579 defined CH TRU mixed waste in Section 2, item 3 as follows: "*The term "contact-handled transuranic waste" means transuranic waste with a surface dose rate not greater than 200 millirem per hour*." This same definition of CH TRU mixed waste (mixed or non-mixed) was incorporated into the Permit Part 1, Section 1.5.1. When Congress included this definition in the Land Withdrawal Act, they codified a definition established by the DOE. The following plain language definitions for Contact-Handled and Remote-Handled transuranic waste are found in Section 7 of DOE N 435.1, *Contact-Handled and Remote-Handled Transuranic Waste Packaging*:

a. Contact-handled Transuranic (CH-TRU) Waste. Waste containing more than 100 nanocuries of alpha emitting transuranic isotopes per gram of waste with half-lives greater than 20 years and a payload surface dose rate not greater than 200 millirem per hour.

b. Remote-handled Transuranic (RH-TRU) Waste. Waste containing more than 100 nanocuries of alpha emitting transuranic isotopes per gram of waste with half-lives greater than 20 years and a payload surface dose rate of 200 millirem per hour or greater.

It is clear from these definitions that the designation of CH TRU or RH TRU is based solely on the dose rate at the surface of the payload container and not the dose rate of the waste before final packaging. Therefore, waste with high surface dose rates may be required to be managed as RH TRU mixed waste at a generator site. However, if that very same waste is packaged into a shielded container payload container such that the surface dose rate is below 200 mrem/hr, it can be managed and stored as CH TRU mixed waste after packaging.

Whenever transuranic waste is shipped in the shielded container payload container and the resulting surface dose rate is not greater than 200 mrem/hr then it is, by statute and DOE policy, CH TRU mixed waste.

The management and storage requirements for CH TRU mixed waste in the Permit will apply to the waste that arrives at the WIPP facility in shielded containers because the surface dose rate is less than 200 millirems/hr at the time of shipment. In this context, management of TRU mixed waste includes receipt, unloading, handling in the Waste Handling Building (**WHB**), hoisting, handling in the underground, emplacement, inspections, monitoring, and associated record keeping. Modification to the Permit is required to include shielded containers as approved containers. In developing this Class 2 PMR the Permittees addressed only those items which impact the addition of this new container at the WIPP facility.

The conditions for managing RH TRU mixed waste were established when the Permit was modified in 2006. These conditions assure the safety of the public and workers during management, storage and disposal at the WIPP facility. This PMR is not proposing a change to these conditions for managing RH TRU mixed waste. The Permittees are proposing a change to the way a portion of the RH TRU mixed waste inventory is managed if it is packaged in shielded containers and has a surface dose rate of less than 200 mrem/hr. In this case, the RH TRU mixed waste may be managed, stored, and disposed at the WIPP facility as CH TRU

mixed waste. Management and storage of shielded containers as CH TRU mixed waste in accordance with the Permit is also protective of human health and the environment. This is because the management and storage of shielded containers can be accomplished within the existing operating framework (e.g., standard operating procedures, equipment, systems, and personnel) which has been demonstrated to be protective over more than a decade of operation.

Because the quantity of RH TRU mixed waste that can be successfully shielded to a surface dose rate of less than 200 mrem/hr is small, no increase in the volume of CH or RH TRU mixed waste which is permitted to be stored or emplaced at the WIPP facility is needed to accommodate this volume of waste. Therefore, changes in the maximum storage capacity or amount of storage area indicated in Permit Part 3, Section 3.1.1 and Section 3.1.2 or disposal volumes in Permit Part 4, Section 4.1.1, are **not** necessary since shielded containers will be managed, stored, and disposed within the existing operating envelope established for CH TRU mixed waste in the Permit. With one exception (i.e., the RH Hot Cell which does not apply to CH TRU mixed waste storage), the storage time limitations in Permit Part 3, Section 3.1.1 for TRU mixed waste is the same (i.e., 60 days) regardless of surface dose rate. Therefore, the limitations that currently apply to CH TRU mixed waste will also apply to waste contained in shielded containers, and no changes to these time limits are necessary. The management of shielded containers does not alter the potential exposure to hazardous waste and, therefore, does not increase the risk to human health and the environment. This is because the limits established for the facility and the operations specified in the Permit have been demonstrated to be protective and are unchanged to accommodate shielded containers.

The quantity of RH TRU mixed waste that can be shipped to the WIPP facility is limited to 4% of the total TRU mixed waste capacity. Only a portion of that waste has been identified as potentially eligible for shipment in Shielded Containers. Therefore, there is an insufficient quantity of RH TRU mixed waste to impact the overall capacity of the facility. This is illustrated in the following example calculation:

> According to Crawford, et.al., 2007[1], 1,922 m^3 of RH TRU mixed waste could potentially qualify for shipment in a shielded container. If the 30-gallon inner container is completely filled (0.11 m^3) then this will result in 17,473 shielded containers (1,922 m^3/ 0.11m^3 = 17,473 shielded containers). This represents about 6% of the floor space in Panels 7 – 10 (17,473 container / 3 containers per assembly / 2 assemblies per stack / 12,000 stacks per panel / 4 panels remaining = 0.06 or 6%). 12,000 stacks per panel is based on a footprint of a 7-pack assembly of TRU waste containers.

Some interested stakeholders asked for a more recent evaluation relative to the RH inventory. However, the Permittees have not performed an analysis relative to the most current RH TRU inventory in support of this modification simply because volume changes are not being proposed in this PMR and it is not within the scope of the PMR. The above referenced report is to illustrate that only a fraction of the 4% total capacity of RH TRU mixed waste is available for

[1] http://www.epa.gov/radiation/docs/wipp/simpleanalysisreport.pdf

use in shielded containers and therefore only a portion of that will take up floor space. The Permittees have clearly stated the need for the PMR is for the addition of the shielded container for use by the generator sites for managing certain RH TRU mixed wastes. In addition, benefits to the Permittees in terms of simplified waste management are discussed in the overview of the PMR. The Resource Conservation and Recovery Act (**RCRA**) does not require container-specific inventory projections as part of the regulatory process for including descriptions of containers used for managing hazardous waste. The topic of inventory, and its relationship to the capacity of the WIPP repository to dispose of up to 7,080 cubic meters of RH TRU waste, is best discussed in another forum because this PMR does not alter the volume to accommodate any more or less RH TRU mixed waste than what is currently allowed by the Permit.

This PMR is needed to add another container to the list of acceptable containers in Permit Part 3, Section 3.3.1. The Permittees believe that this container may further expedite the cleanup and disposal of TRU mixed waste from throughout the United States.

The Nuclear Regulatory Commission (**NRC**) has authorized the use of the HalfPACT transportation package for the shipment of shielded containers. The shielded containers comply with the U.S. Department of Transportation (**DOT**) Type 7A specifications.

The RH TRU mixed waste that is included in the current inventory for disposal at the WIPP facility was evaluated for packaging in shielded containers. Candidate RH TRU mixed waste streams for shipment and disposal in shielded containers will be selected based on the requirement to keep the radiation surface dose rate at the external surface of the shielded container below 200 mrem/hr in accordance with Permit Part 1, Section 1.5.1. The characterization being performed on waste being shipped in shielded containers will be no different than the waste characterization that is now required for RH TRU mixed waste in the Permittees' Waste Analysis Plan. Waste placed into shielded containers will have been characterized per the requirements of the Permit Attachments C-C6 and will have undergone confirmation per the Permit requirements specified in Permit Attachment C7.

Specifically, the requirements for characterizing RH TRU mixed waste apply to RH TRU mixed waste that will be placed into shielded containers. This assures that the radiography or visual examination record required by Permit Attachment C, Section C-3c for RH TRU mixed waste is available for confirmation. Characterization information will be available for confirmation for the 30-gallon drum. The Permit requirements specified in Permit Attachment C7 regarding confirmation apply equally to both CH TRU and RH TRU mixed waste regardless of the payload container used for shipment and management.

RH TRU mixed waste emplaced at the WIPP facility in shielded containers will remain designated as RH TRU mixed waste in the WIPP Waste Information System (**WWIS**). The emplaced volume will be counted against the RH TRU mixed waste volume limits specified in the Permit. The shielded container allows the Permittees to manage the shipment in a manner consistent with management of a CH TRU mixed waste shipment.

In the unlikely event that shielded containers have surface contamination or container integrity issues which may require decontamination/repair/patch/overpacking, the Permittees may overpack the shielded container into a standard waste box or ten drum overpack. Because the

surface dose rate is less than 200 mrem/hr, this overpacking will occur in the CH Bay of the WHB and not in the RH Bay, consistent with overpacking other containers that are managed and stored as CH TRU mixed waste. Even if the damage to the shielded container resulted in a breach of the shielding, it would still be handled in the CH Bay in accordance with Permit Attachment D, Section D-4d(6). Facility radiological control programs will dictate how a container breach will be mitigated and may include the use of supplemental shielding, overpacks, or other methods to manage radiological hazards beyond the scope of this Permit.

The shielded containers will be assembled for shipment from the generator site in a three-pack configuration on a triangular pallet surrounded by radial and axial dunnage components. These components are designed to keep the load from shifting during transportation. They will be transported as a single three-pack configuration within the HalfPACT packaging. Currently, RH TRU mixed waste is transported in RH 72-B packaging. The shielded containers will be transported in HalfPACTs with no more than three HalfPACTs per shipment. Not all RH TRU mixed waste will be packaged in shielded containers. Therefore, both RH 72-B and HalfPACTs will be shipped to the WIPP facility. Using shielded containers has the potential to reduce the number of shipments so, therefore, there is no additional risk. Furthermore, regardless of the number of shipments, the Permittees are not requesting an increase in the storage capacity of the Parking Area Unit or WHB or disposal capacity for RH TRU mixed waste in the underground. The maximum amount of waste managed and stored at the WIPP facility will remain unchanged, thereby posing no additional risk.

Upon arrival at the WIPP facility, the shielded containers will be processed as CH TRU mixed waste using CH TRU mixed waste handling equipment and operating procedures. After receipt at the WIPP facility, the HalfPACT transportation container will be opened using existing lifting fixtures and equipment in the CH Bay portion of the Waste Handling Building. Once accessible after the HalfPACT lids have been removed, the top axial dunnage will be removed prior to removing the three-pack assembly from the HalfPACT (see Figure 2). Next, the three-pack assembly, the radial dunnage, the bottom slipsheet and the triangular pallet will be lifted from the HalfPACT using the installed guide tubes and placed on a facility pallet. A plastic reinforcing plate may be used for ease of handling and stacking purposes. When in storage in the Waste Handling Building, RH TRU mixed waste in shielded containers is subject to the more stringent visual inspection requirements for CH TRU mixed waste. The facility pallet will then be moved to the repository in the same manner as other CH TRU mixed waste. The three-pack assembly will be placed singly on the floor using the slipsheet. The triangular pallet will not be emplaced. The three-pack will be placed in the interstitial spaces among the CH TRU mixed waste (see Figure 3). In order to meet the stacking stability requirements of Permit Attachment A2, Section A2-2b, shielded containers will not be stacked more than two high, and no other waste assemblies or backfill MgO sacks will be placed on top of three-pack assemblies of shielded containers[2]. Emplacement of the three-pack assembly of shielded containers will be performed using existing waste handling equipment and fixtures.

---

[2] http://www.epa.gov/radiation/docs/wipp/shielded_container/shieldedcontainers_090810.pdf;

http://www.epa.gov/radiation/docs/wipp/shielded_container/shieldedcontainers_090810_att1.pdf

The Permittees will track waste components, packaging, transportation and emplacement information using the same method as other waste that is transported and emplaced at the WIPP facility. The shielded container waste volume will be reported as the volume of RH TRU mixed waste in the inner waste container (i.e., 30 gallons). Quantities of RH TRU mixed waste that arrive in canisters are currently counted based on the canister internal volume (0.89 m^3) specified in the Permit. Therefore, shielded containers and canisters will have a common volume reporting basis in the WWIS.

The volume of the shielded container is specified as 0.11 m^3, which is the internal volume of the 30-gallon inner container. Accordingly, the volume of the shielded container is based on the maximum amount of waste that can be placed into the container. This is the same basis for the other containers in the Permit. This is the appropriate volume for this container because shielded containers are only being approved for use with 30-gallon inner containers (i.e., shielded containers will not be used without a 30-gallon inner container).

The Permittees are also proposing an administrative change by requesting the removal of the "Container Equivalency" column in Permit Part 4, Table 4.1.1 since this column is not used to meet any compliance requirements. The columns that do have compliance implications are only "Maximum Capacity" and "Final Waste Volume". Container Equivalency is not tracked in the WWIS nor is it used to calculate any final waste volumes. Converting shielded containers to RH canister equivalence will result in fractions of "equivalent containers" which is meaningless since fractions of containers are not disposed.

The Permittees have evaluated the Drum Age Criteria (**DAC**) for the shielded container packaging configuration using the same VDRUM model that was used for other container DAC calculations (Drum Age Criteria Values for the Shielded Container, September 2011). A conservative packaging configuration was used in the evaluation (Appendix C). The evaluation indicates that existing 55-gallon DAC values bound the values for the shielded container. This calculation takes into account the open-top coated and woven polypropylene bag used to hold the 30-gallon drum. In modeling, the Permittees considered this woven, open-topped bag as if it were a closed (via twist and tape) liner bag serving as another layer of confinement. The calculations indicate that the DAC is bounded by the current 55-gallon drum DAC.

The Permittees are proposing the following changes in this PMR:

1. Add a new container in Permit Part 3, Section 3.3.18.; Permit Part 4, Table 4.1.1; Permit Part 4, Section 4.3.1.8.; Permit Attachment A1, Section A1-1b(2); Section A1-1d(3); Section A1-1d(4); Table A1-2; Figure A1-37; Permit Attachment A2, Section A2-2a(1); Section A2-2b, Table A2-1; Permit Attachment A4, Section A4-3; Permit Attachment C1, Section C1-1a, Section C1-1a(1), Table C1-8 and footnote; Permit Attachment D, Section D-1d, Section D-1e(1); Permit Attachment E,

Section E-1b(1); Permit Attachment G3, Section G3-4a; and Permit Attachment H1, Introduction.

2. Revise Permit Part 4, Table 4.1.1 to remove the container equivalent column since RH TRU mixed waste will be disposed of in both canisters and shielded containers. This is the same approach used for CH TRU mixed waste which can arrive in six different containers. Furthermore, this table is a volume based limitation and not a container limitation. Thus it is not necessary to have the number of equivalent containers since the volume is not being changed. The use of Container Equivalency is not a means by which neither the Permittees nor the NMED can show compliance with Panel volumes or repository volumes nor is it used to calculate any final volumes.

3. Add a figure of the shielded container (Permit Attachment A1, Figure A1-37).

4. Add "Shielded Containers" to Permit Attachment C1, Sections C1-1a and C1-1a (1) and revise Permit Attachment C1, Table C1-8 indicating that the 55-gallon drum DAC bounds the shielded container.

Appendix A, Table of Changes, provides a detailed list of changes by Permit section. Proposed text changes are included in Appendix B of this PMR.

2. 20.4.1.900 NMAC (incorporating 40 CFR §270.42(b)(1)(ii)), requires the applicant to identify that the modification is a Class 2 modification.

This PMR proposes to add a new container to the Permit. The shielded container will contain hazardous waste already approved for disposal at the WIPP facility; however, that waste (RH TRU mixed waste) is approved for management in the RH Complex and not in the CH Bay, and therefore, as discussed below, it is a different waste in a particular unit. This type of modification is similar to what the Environmental Protection Agency (**EPA**) described when they added this item (F.3.b) to the RCRA regulations in 1988[3].

The Permit distinguishes between CH TRU mixed waste and RH TRU mixed waste even though both types of waste contain similar hazardous waste constituents. The reason for distinguishing between the two types is due to the presence of radioactivity as measured by the radioactive dose rate on the surface of the container. Excessive exposure to radioactivity (i.e., radioactivity at high levels) can be hazardous to workers. To mitigate the hazard, the Permittees use the categories CH TRU and RH TRU to dictate the management practices used for each container, thereby minimizing exposure to radioactivity for the purpose of protecting workers. For example, it is not possible to visually inspect the surface of a RH TRU mixed waste container or a RH TRU mixed waste container storage area except remotely using cameras. On the other

[3] 53 FR 37927, September 28, 1988.

hand, CH TRU mixed waste containers and storage areas can be (and must be) inspected visually. Even though both RH TRU mixed waste and CH TRU mixed waste contain the same hazardous waste, they are considered to be different waste by the Permittees because they are managed and stored differently (remotely versus not remotely) and have different RCRA requirements applied to them (remote inspection versus visual inspection). Remote-Handled TRU mixed waste without sufficient shielding cannot be managed and stored in the CH TRU storage unit since the CH TRU mixed waste storage unit is not equipped to perform the needed remote management. Likewise, CH TRU mixed waste cannot be managed and stored in the RH TRU storage unit since visual inspection would be impractical. In this modification, the Permittees are proposing to manage hazardous waste that is defined as RH TRU mixed waste by the generator in the CH TRU mixed waste management areas by using the shielded container. Because RH TRU mixed waste has not been managed and stored in the CH TRU portion of the facility, the Permittees consider this Class 2 PMR as the appropriate modification request to authorize this activity. Since modification of the facility is not needed, and the imposition of different waste management practices is not needed, this modification is not classified as a Class 3 Permit Modification. This is because the management of RH TRU mixed waste in shielded containers can be done using existing CH TRU mixed waste practices in the CH TRU portion of the facility.

Unlike the SLB2 and TRUPACT III, there is no need for specialized waste management equipment nor is there any increase in the proposed storage area in the Waste Handling Building for managing shielded containers. NMED processed and approved these containers and shipping packages as Class 2 PMRs. Therefore, this is a Class 2 as specified in 20.4.1.900 NMAC (incorporating 40 CFR, §270.42(b)), Appendix I, Item F.3.b which states: "*Storage of different wastes in containers,…. That do not require additional or different management practices from those authorized in the permit."*

Although RH TRU mixed waste has been shipped to the WIPP facility previously, this waste has not been managed and stored in the CH TRU mixed waste management portion of the facility. Therefore, this classification is appropriate and will allow for NMED evaluation of the proposal and public comment on this requested change.

The Permittees have added other containers and shipping packages. The basis for these changes was determined in accordance with 20.4.1.900 NMAC (incorporating 40 CFR 270.42 Appendix I) depending on the portions of the Permit that were affected by the change. Although the basis for classification was different in some cases, these have been approved by the New Mexico Environment Department (NMED) as Class 2 Permit Modifications. These include the following:

- Direct loaded ten drum overpack (approved 11-25-2002) 40 CFR 270.42 Appendix I Item # F.a.2.
- Direct loaded 85-gallon drums (approved 11-25-2002) 40 CFR 270.42 Appendix I Item # F.a.2.
- Addition of 100-gallon drums (approved 11-25-2002) 40 CFR 270.42 Appendix I Item # F.a.2.

- Addition of a standard large box 2 (SLB2) (approved 4-15-2011) 40 CFR 270.42 Appendix I Item # F.a.2.
- Addition of a HalfPACT shipping package (approved 11-25-2002) Based upon an August 30, 2001, NMED letter that indicates that the addition of waste management containers is not a “non-substantive” change and, therefore, should be processed as a Class 2 Permit Modification.
- Addition of a TRUPACT III shipping package (approved 4-15-2011) 40 CFR 270.42 Appendix I Item # F.a.2.

This PMR also proposes some changes to the waste analysis plan relative to the drum age criteria to be used for the shielded container. Therefore, 40 CFR, §270.42(b), Appendix I, item B. General Facility Standards 1. Changes to waste sampling or analysis methods: d. Other changes…2, also applies”

It has been suggested by some stakeholders that this modification should be processed as a Class 3 modification. A regulatory analysis of why it is inappropriate for the Permittees to request a Class 3 process for a modification that is clearly defined in 20.4.1.900 NMAC (incorporating 40 CFR 270.42 Appendix I) as Class 2 is attached as Appendix D.

3. 20.4.1.900 NMAC (incorporating 40 CFR 270.42(b)(1)(iii)), requires the applicant to explain why the modification is needed.

This PMR is necessary to add a shielded container as an acceptable waste container at the WIPP facility.

Shielded containers have been developed as one method for generator sites to facilitate the packaging and shipment of RH TRU mixed waste. For example, a generator site using shielded containers may be able to avoid the need of some new RH waste handling and storage facilities once the waste is packaged. Consequently, in order to anticipate usage by TRU waste generators, the Permittees have identified the need to include these containers in the Permit. Shielded containers are expected to reduce the time and personnel necessary for the packaging of RH TRU mixed waste at generator sites and the management, storage, and disposal of that waste at the WIPP facility. Only waste that meets the definitions of TRU mixed waste in Permit Part 1, Section 1.5.7 and that can be packaged to meet the surface dose rate limitations for CH TRU mixed waste will be managed, stored, and disposed at the WIPP facility in shielded containers. The shielded container will be transported to the WIPP facility in the HalfPACT transportation package and will be managed, stored, and subsequently emplaced in the rooms of the repository as CH TRU mixed waste as discussed in Section 1 of this Overview. The containers comply with DOT Type 7A specifications and they will have a surface dose rate of less than 200 mrem/h.

The Permittees believe the use of shielded containers will be beneficial because the shipment of RH TRU mixed waste in shielded containers in the HalfPACT may be more efficient than shipment in canisters using the RH 72-B Cask. This is because a single RH 72-B Cask shipment holds a single canister which typically will contain three 55-gallon drums or three 30-gallon drums. A shipment in HalfPACT may contain up to three HalfPACTs each containing

three shielded containers for a total of nine which is three times the amount in a single canister shipment. However, even if a single HalfPACT is used in a shipment with no other waste, the shipment is no less efficient than using a canister with the same payload. Furthermore, a pallet of shielded containers containing two three-packs can be managed from unloading to disposal in about two hours versus the eight to ten hours needed for RH TRU mixed waste in a canister. This is a significant saving in waste processing time. Handling as CH TRU mixed waste is inherently less complex than handling waste as RH TRU mixed waste as required by Permit Attachments A1 and A2.

The RH TRU mixed waste that will be packaged in shielded containers is waste that is or may be designated for disposal in the WIPP facility and will have undergone the required characterization as RH TRU mixed waste specified in the WIPP Waste Analysis Plan. No change in the permitted aboveground hazardous waste storage or underground disposal unit capacity is required. Candidate RH TRU mixed waste streams for shipment and disposal in shielded containers will be selected based on the requirement to keep the radiation surface dose rate at the external surface of the shielded containers below 200 mrem/hr. The volume of waste emplaced in shielded containers will remain designated as RH TRU mixed waste in the WWIS and will be counted against the RH TRU mixed waste underground hazardous waste disposal unit disposal limits in the Permit.

Additional explanations of why the changes are needed are provided in Item 1 above.

4. 20.4.1.900 NMAC (incorporating 40 CFR §270.42 (b)(1)(iv)) requires the applicant to provide the applicable information required by 40 CFR §270.13 through §270.21, §270.62 and §270.63.

The attached regulatory crosswalk describes those portions of the Permit that are affected by this PMR. Where applicable, regulatory citations in this modification reference Title 20, Chapter 4, Part 1, NMAC, revised March 2009, incorporating the CFR, Title 40 (40 CFR Parts 264 and 270). 40 CFR §270.16 through §270.22, §270.62, §270.63 and §270.66 are not applicable at WIPP. Consequently, they are not listed in the regulatory crosswalk table. 40 CFR §270.23 is applicable to the WIPP Hazardous Waste Disposal Units (**HWDUs**). This modification does not impact the conditions associated with the HWDUs.

5. 20.4.1.900 NMAC (incorporating 40 CFR §270.11(d)(1) and 40 CFR §270.30(k)) require that any person signing under paragraph a and b must certify the document in accordance with 20.4.1.900 NMAC.

The transmittal letter for this PMR contains the signed certification statement in accordance with Permit Part 1, Section 1.9. of the Permit.

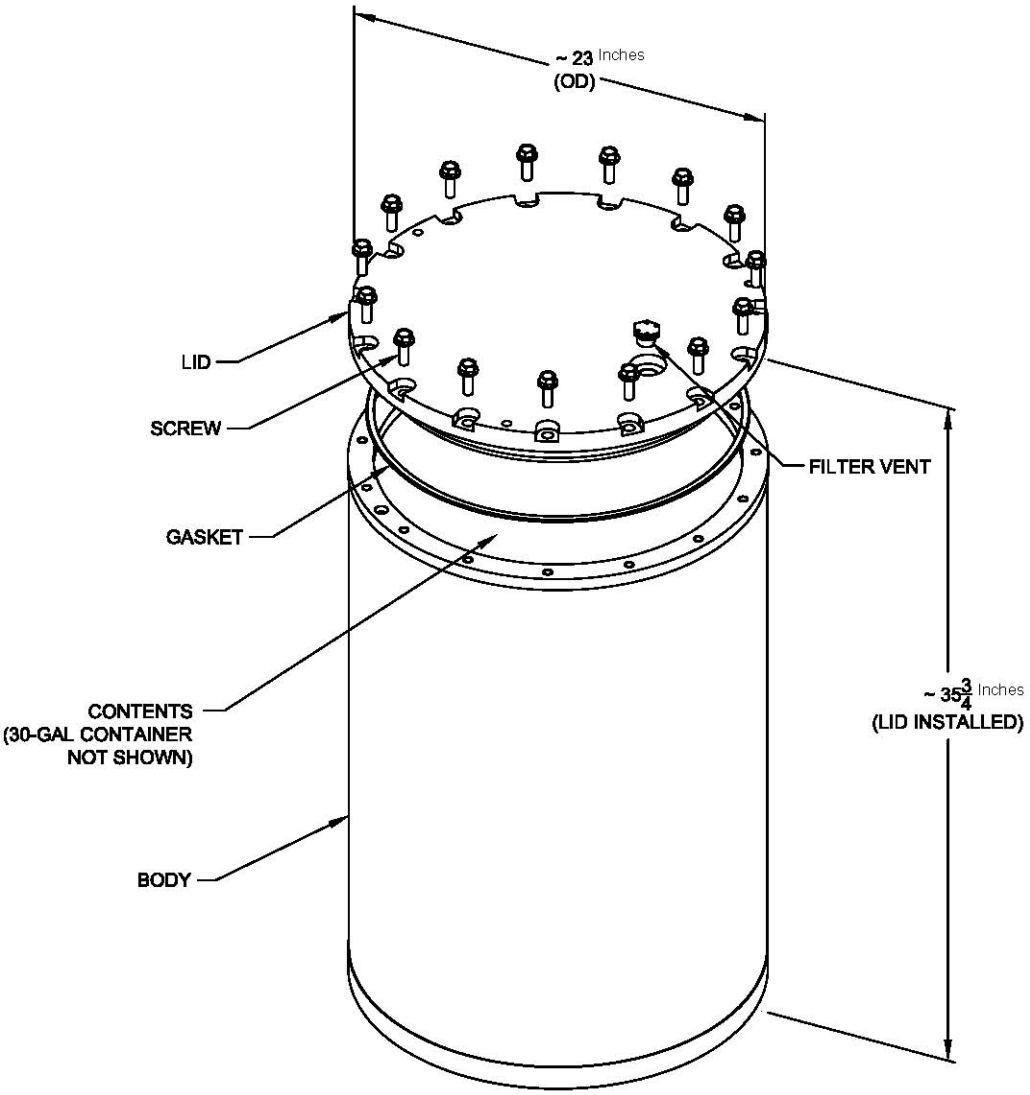

Figure 1
Shielded Container

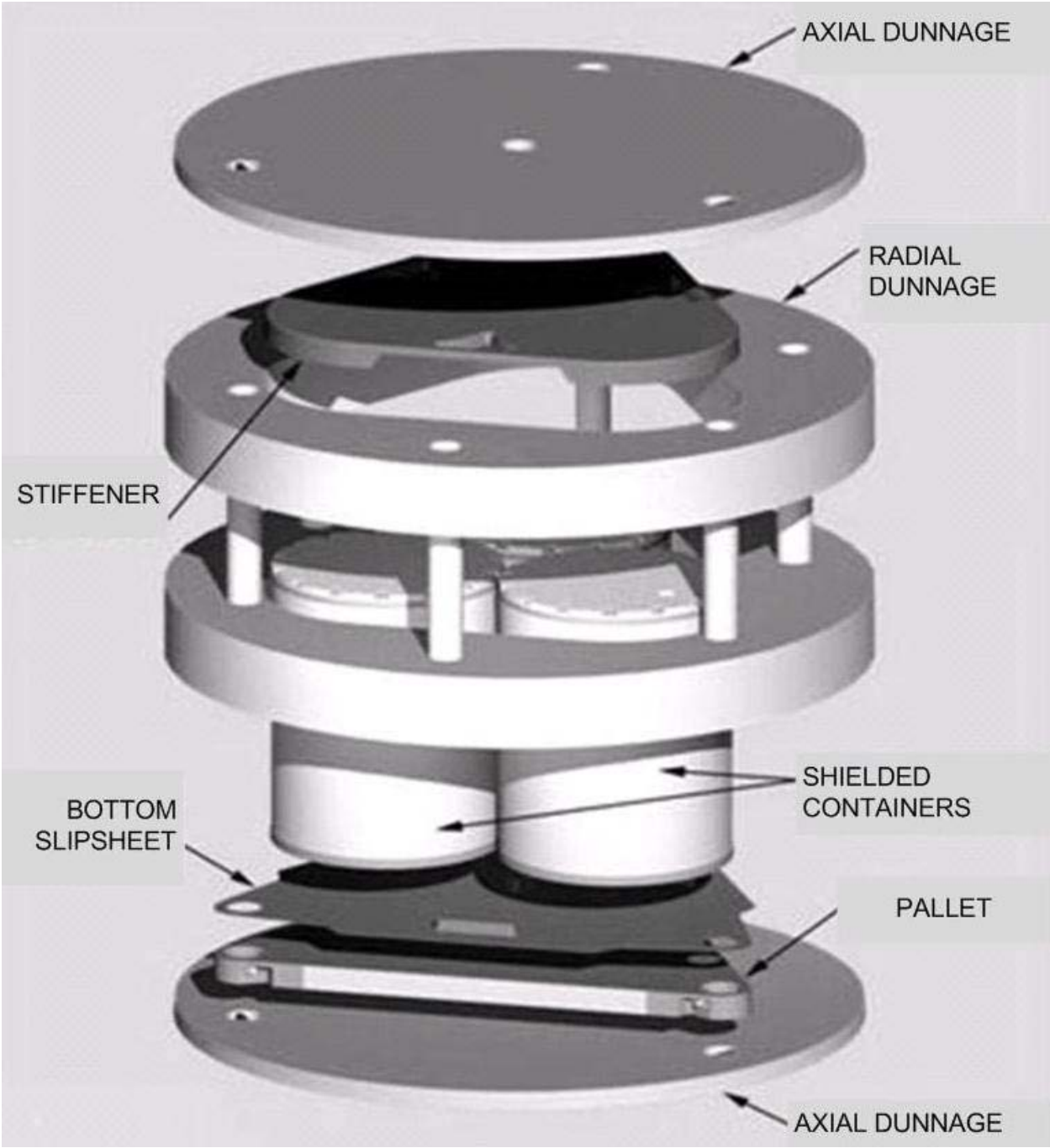

Figure 2
Three-Pack Assembly of Shielded Containers with Axial and Radial Dunnage

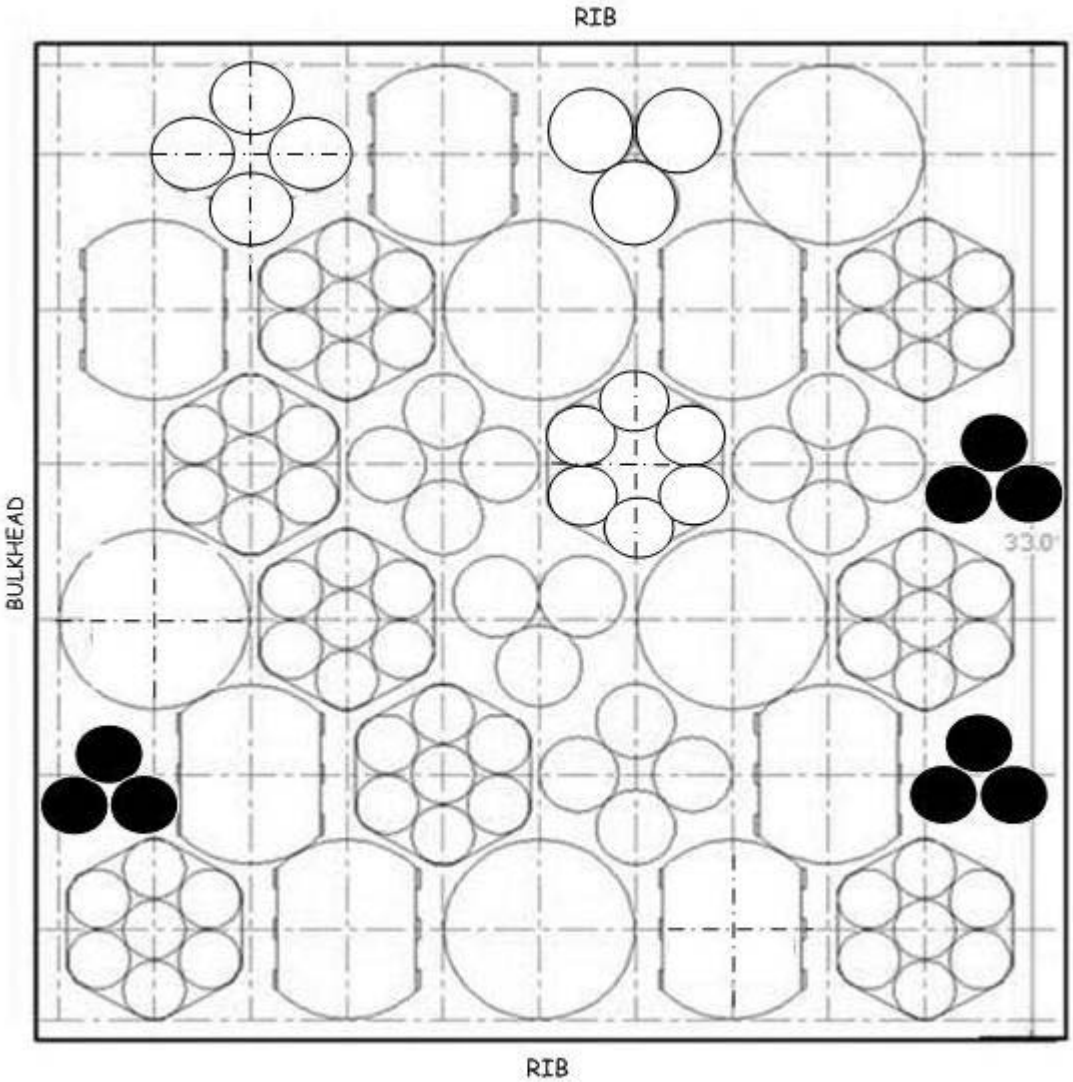

Figure 3
Shielded Containers – Randomly Placed in the Interstitial Spaces in Waste Rows

Regulatory Crosswalk

Regulatory Citation(s) 20.4.1.900 NMAC (incorporating 40 CFR Part 270)	Regulatory Citation(s) 20.4.1.500 NMAC (incorporating 40 CFR Part 264)	Description of Requirement	Added or Clarified Information		
			Section of the Permit or Permit Application	Yes	No
§270.13		Contents of Part A permit application	Attachment B, Part A		✓
§270.14(b)(1)		General facility description	Attachment A		✓
§270.14(b)(2)	§264.13(a)	Chemical and physical analyses	Attachment C		✓
§270.14(b)(3)	§264.13(b)	Development and implementation of waste analysis plan	Attachment C		✓
	§264.13(c)	Off-site waste analysis requirements	Attachment C		✓
§270.14(b)(4)	§264.14(a-c)	Security procedures and equipment	Part 2.6		✓
§270.14(b)(5)	§264.15(a-d)	General inspection requirements	Attachment E		✓
	§264.174	Container inspections	Attachment E	✓	
§270.23(a)(2)	§264.602	Miscellaneous units inspections	Attachment E		✓
§270.14(b)(6)		Request for waiver from preparedness and prevention requirements of Part 264 Subpart C	NA		
§270.14(b)(7)	264 Subpart D	Contingency plan requirements	Attachment D		✓
	§264.51	Contingency plan design and implementation	Attachment D		✓
	§264.52 (a) & (c-f)	Contingency plan content	Attachment D	✓	
	§264.53	Contingency plan copies	Attachment D		✓
	§264.54	Contingency plan amendment	Attachment D		✓
	§264.55	Emergency coordinator	Attachment D		✓
	§264.56	Emergency procedures	Attachment D		✓
§270.14(b)(8)		Description of procedures, structures or equipment for:	Part 2.10		✓
§270.14(b)(8)(i)		Prevention of hazards in unloading operations (e.g., ramps and special forklifts)	Part 2.10		✓
§270.14(b)(8)(ii)		Runoff or flood prevention (e.g., berms, trenches, and dikes)	Part 2.10		✓
§270.14(b)(8)(iii)		Prevention of contamination of water supplies	Part 2.10		✓
§270.14(b)(8)(iv)		Mitigation of effects of equipment failure and power outages	Part 2.10		✓
§270.14(b)(8)(v)		Prevention of undue exposure of personnel (e.g., personal protective equipment)	Part 2.10		✓
§270.14(b)(8)(vi) §270.23(a)(2)	§264.601	Prevention of releases to the atmosphere	Part Part 4 Attachment A2 Attachment N		✓
	264 Subpart C	Preparedness and Prevention	Part 2.10		✓
	§264.31	Design and operation of facility	Part 2.10		✓
	§264.32	Required equipment	Part 2.10 Attachment D		✓
	§264.33	Testing and maintenance of equipment	Attachment E		✓
	§264.34	Access to communication/alarm system	Part 2.10		✓
	§264.35	Required aisle space	Part 2.10		✓
	§264.37	Arrangements with local authorities	Attachment D		✓

Regulatory Citation(s) 20.4.1.900 NMAC (incorporating 40 CFR Part 270)	Regulatory Citation(s) 20.4.1.500 NMAC (incorporating 40 CFR Part 264)	Description of Requirement	Added or Clarified Information		
			Section of the Permit or Permit Application	Yes	No
§270.14(b)(9)	§264.17(a-c)	Prevention of accidental ignition or reaction of ignitable, reactive, or incompatible wastes	Part 2.10		✓
§270.14(b) (10)		Traffic pattern, volume, and controls, for example: Identification of turn lanes Identification of traffic/stacking lanes, if appropriate Description of access road surface Description of access road load-bearing capacity Identification of traffic controls	Attachment A4	✓	
§270.14(b) (11)(i) and (ii)	§264.18(a)	Seismic standard applicability and requirements	Part B, Rev. 6 Chapter B		✓
§270.14(b) (11)(iii-v)	§264.18(b)	100-year floodplain standard	Part B, Rev. 6 Chapter B		✓
	§264.18(c)	Other location standards	Part B, Rev. 6 Chapter B		✓
§270.14(b) (12)	§264.16(a-e)	Personnel training program	Part 2 Attachment F		✓
§270.14(b) (13)	264 Subpart G	Closure and post-closure plans	Attachment G & H		✓
§270.14(b)(13)	§264.111	Closure performance standard	Attachment G		✓
§270.14(b)(13)	§264.112(a), (b)	Written content of closure plan	Attachment G		✓
§270.14(b)(13)	§264.112(c)	Amendment of closure plan	Attachment G		✓
§270.14(b)(13)	§264.112(d)	Notification of partial and final closure	Attachment G		✓
§270.14(b)(13)	§264.112(e)	Removal of wastes and decontamination/dismantling of equipment	Attachment G		✓
§270.14(b)(13)	§264.113	Time allowed for closure	Attachment G		✓
§270.14(b)(13)	§264.114	Disposal/decontamination	Attachment G		✓
§270.14(b)(13)	§264.115	Certification of closure	Attachment G		✓
§270.14(b)(13)	§264.116	Survey plat	Attachment G		✓
§270.14(b)(13)	§264.117	Post-closure care and use of property	Attachment H		✓
§270.14(b)(13)	§264.118	Post-closure plan; amendment of plan	Attachment H		✓
§270.14(b)(13)	§264.178	Closure/ containers	Attachment G		✓
§270.14(b)(13)	§264.601	Environmental performance standards-Miscellaneous units	Attachment G		✓
§270.14(b)(13)	§264.603	Post-closure care	Attachment G		✓
§270.14(b)(14)	§264.119	Post-closure notices	Attachment H		✓
§270.14(b)(15)	§264.142	Closure cost estimate	NA		✓
	§264.143	Financial assurance	NA		✓
§270.14(b)(16)	§264.144	Post-closure cost estimate	NA		✓
	§264.145	Post-closure care financial assurance	NA		✓
§270.14(b)(17)	§264.147	Liability insurance	NA		✓
§270.14(b)(18)	§264.149-150	Proof of financial coverage	NA		✓
§270.14(b)(19)(i), (vi), (vii), and (x)		Topographic map requirements Map scale and date Map orientation	Attachment B Part A		✓

Regulatory Citation(s) 20.4.1.900 NMAC (incorporating 40 CFR Part 270)	Regulatory Citation(s) 20.4.1.500 NMAC (incorporating 40 CFR Part 264)	Description of Requirement	Added or Clarified Information		
			Section of the Permit or Permit Application	Yes	No
		Legal boundaries Buildings Treatment, storage, and disposal operations Run-on/run-off control systems Fire control facilities			
§270.14(b)(19)(ii)	§264.18(b)	100-year floodplain	Attachment B Part A		✓
§270.14(b)(19)(iii)		Surface waters	Attachment B Part A		✓
§270.14(b)(19)(iv)		Surrounding Land use	Attachment B Part A		✓
§270.14(b)(19)(v)		Wind rose	Attachment B Part A		✓
§270.14(b)(19)(viii)	§264.14(b)	Access controls	Attachment B Part A		✓
§270.14(b)(19)(ix)		Injection and withdrawal wells	Attachment B Part A		✓
§270.14(b)(19)(xi)		Drainage on flood control barriers	Attachment B Part A		✓
§270.14(b)(19)(xii)		Location of operational units	Attachment B Part A		✓
§270.14(b)(20)		Other federal laws Wild and Scenic Rivers Act National Historic Preservation Act Endangered Species Act Coastal Zone Management Act Fish and Wildlife Coordination Act Executive Orders	Attachment B Part A		✓
§270.15	§264 Subpart I	Containers	Attachment A1 Part 3 Section 3.3.1.8.	✓	
	§264.171	Condition of containers	Attachment A1		✓
	§264.172	Compatibility of waste with containers	Attachment A1		✓
	§264.173	Management of containers	Attachment A1	✓	
	§264.174	Inspections	Attachment E Attachment A1		✓
§270.15(a)	§264.175	Containment systems	Attachment A1		✓
§270.15(c)	§264.176	Special requirements for ignitable or reactive waste	Part 2		✓
§270..15(d)	§264.177	Special requirements for incompatible wastes	Part 2		✓
	§264.178	Closure	Attachment G		✓
§270.15(e)	§264.179	Air emission standards	Part 4 Attachment N		✓
§270.23	264 Subpart X	Miscellaneous units	Attachment A2	✓	

Regulatory Citation(s) 20.4.1.900 NMAC (incorporating 40 CFR Part 270)	Regulatory Citation(s) 20.4.1.500 NMAC (incorporating 40 CFR Part 264)	Description of Requirement	Added or Clarified Information		
			Section of the Permit or Permit Application	Yes	No
§270.23(a)	§264.601	Detailed unit description	Permit Part 4, Section 4.3.1.8. Table 4.1.1 Attachment A2	✓	
§270.23(b)	§264.601	Hydrologic, geologic, and meteorologic assessments	Part 5 Attachment L		✓
§270.23(c)	§264.601	Potential exposure pathways	Part 4 Attachment A2 Attachment N		✓
§270.23(d)		Demonstration of treatment effectiveness	NA		✓
	§264.602	Monitoring, analysis, inspection, response, reporting, and corrective action	Part 2 Part 4 Part 5 Attachment A2 Attachment N		✓
	§264.603	Post-closure care	Attachment H Attachment H1	✓	
	264 Subpart E	Manifest system, record keeping, and reporting	Part 2 Attachment C		✓

Appendix A
Table of Changes

THIS PAGE IS INTENTIONALLY LEFT BLANK

Table of Changes

Affected Permit Section	Explanation of Change	Page Number
Permit Part 3, Section 3.3.1.8.	Add "3.3.1.8. Shielded Container Each shielded container contains a 30-gallon inner container with gross internal volume of 4.0 ft^3 (0.11 m^3). Shielded containers contain RH TRU mixed waste, but the shielding will allow it to be managed and stored as CH TRU mixed waste. For the purpose of this Permit, shielded containers will be managed, stored, and disposed as CH TRU mixed waste, but will be counted towards the volume limits associated with RH TRU mixed waste. Shielded containers may be overpacked into a standard waste box or ten drum overpack.	B-3
Permit Part 4, Table 4.1.1.	Remove "container equivalent" column since the RH TRU mixed waste may now be disposed at the WIPP facility in containers other than canisters.	B-4
Permit Part 4, Section 4.3.1.8	Add Section "4.3.1.8 Shielded Container" and "Shielded containers are configured as a three-pack."	B-5
Permit Attachment A1, Section A1-1b(2)	Add "shielded containers, which are received in HalfPACTs," Add "Shielded Container Remote-Handled TRU mixed waste received at the WIPP facility in shielded containers will be arranged as three-packs. A summary description of the shielded container is provided below. The shielded container meets the requirements for DOT specification 7A (Figure A1-37). Shielded containers consist of a 30-gallon inner container with a gross internal volume of 4.0 ft^3 (0.11 m3). One or more filter vents will be installed in the shielded container lid to prevent the escape of radioactive particulates and to prevent internal pressurization. The shielded container is constructed with approximately one inch of lead shielding on the sides and approximately three inches of steel on the top and bottom of the container and will be used to emplace RH TRU mixed waste. The shielding will allow it to be managed and stored as CH TRU mixed waste."	B-6
Permit Attachment A1, Section A1-1d(3)	Add "that is not in a shielded container" Add "Remote-Handled TRU mixed waste received in shielded containers will be managed and stored as CH TRU mixed waste."	B-6
Permit Attachment A1, Section A1-1d(4)	Add "A1-1d(4) Handling Waste in Shielded Containers Remote-Handled TRU mixed waste received at the WIPP facility in shielded containers will be managed, stored, and emplaced as CH TRU mixed waste using the CH TRU mixed waste handling equipment described in this Permit. Shielded containers with RH TRU mixed waste will arrive by tractor-trailer at the WIPP facility in sealed HalfPACTs, at which time they will undergo security and radiological checks and shipping documentation reviews. Consistent with the handling of HalfPACT shipping packages in Section A1-1d(2), a	B-6,B-7

Affected Permit Section	Explanation of Change	Page Number
	forklift will remove the HalfPACT and transport it into the WHB and place the HalfPACT at either one of the two TRUDOCKs in the TRUDOCK Storage Area of the WHB Unit. An external survey of the HalfPACT inner vessel will be performed as the outer containment vessel lid is removed. The inner vessel lid or closure lid will be lifted under the VHS, and the contents will be surveyed during and after this process is complete. A description of the VHS and criteria that are applied if radiological contamination is detected are discussed in Section A1-1d(2). Shielded containers will be received as three-pack assemblies in HalfPACTs. An overhead bridge crane will be used to remove the contents of the shielded container assembly and place them on a facility pallet. The containers will be visually inspected for physical damage (severe rusting, apparent structural defects, signs of pressurization, etc.) and leakage to ensure they are in good condition prior to storage. Waste containers will also be checked for external surface contamination. If a primary waste container is not in good condition, the Permittees will overpack the container, repair/patch the container in accordance with 49 CFR §173 and §178 (e.g., 49 CFR §173.28), or return the container to the generator. Once the shielded container assembly is on the facility pallet, the TRU mixed waste container identification numbers will be verified against the Uniform Hazardous Waste Manifest and the WWIS. Inconsistencies will be resolved as discussed in Section A1-1d(2). Up to two three-pack assemblies of shielded containers will be placed on a facility pallet. The use of facility pallets will elevate the waste at least 6 in. (15 cm) from the floor surface. Pallets of waste will then be relocated to the CH Bay Storage Area of the WHB Unit for normal storage or will be transported to the conveyance loading room as described in Section A1-1d(2).”	
Permit Attachment A1, Table A1-2	Revise Table A1-2 to add “Shielded container” and a “Three pack of shielded containers” to the table with those weights being “2,260 lbs.” and “7,000 lbs.” respectively.	B-8
Permit Attachment A1, Figure A1-37	Add “Figure A1-37 Typical Shielded Container”	B-9
Permit Attachment A2, Section A2-2a(1)	Add “two 3-packs of shielded containers” Delete “or”	B-10
Permit Attachment A2, Section A2-2b	Add “and shielded containers” Delete “(e.g., TRUPACT IIs or HalfPACTs),” Add “one 3-pack of shielded containers,” Add “or shielded containers”	B-10
Permit Attachment A2,	Revise Table A2-1 to add “Shielded container” and a	B-11

Affected Permit Section	Explanation of Change	Page Number
Table A2-1	"Three-pack of shielded containers" to the table with those weights being "2,260 lbs." and "7,000 lbs." respectively.	
Permit Attachment A4, Section A4-3	Add "one shielded container 3-pack," Add "two shielded container 3-packs,"	B-12
Permit Attachment C1, Section C1-1a	Add "and shielded containers"	B-13
Permit Attachment C1, Section C1-1a(1)	Add "and shielded containers" Delete "and" Add ", and shielded containers"	B-13,B-14
Permit Attachment C1, Table C1-8	Add "and shielded containers" Add "and shielded containers" to footnote [a]	B-15,B-16
Permit Attachment D, Section D-1d	Add "Remote-Handled TRU mixed waste may arrive in shielded containers with an internal capacity of 4.0 ft^3 (0.11 m^3). Shielded containers will be arranged as three-packs."	B-17
Permit Attachment D, Section D-1e(1)	Add "3-pack of shielded containers," Delete "or"	B-17
Permit Attachment D, Section D-4d(1)	Add "that is not managed in shielded containers"	B-17
Permit Attachment D, Section D-4d(6)	Add "that are managed as" and delete "of"	B-17 B-18
Permit Attachment E, Section E-1b(1)	Delete "CH TRU mixed" Add "that will be managed and stored as CH TRU mixed waste" Add "," and delete "or" Add "or shielded containers as (3)-packs" Add "off-site waste that will be managed and stored as" Add "Off-site waste that will be managed and stored as" Delete "handled" Add "managed"	B-19
Permit Attachment G3, Section G3-4a	Add "TRU mixed waste, including RH TRU mixed waste in shielded containers"	B-20
Permit Attachment H1, Introduction	Add "Some RH TRU mixed waste may arrive in shielded containers as described in Permit Attachment A1."	B-21

This page is intentionally left blank

Appendix B
Proposed Revised Permit Text

This page is intentionally left blank

Proposed Revised Permit Text:

3.3.1. Acceptable Storage Containers

The Permittees shall use containers that comply with the requirements for U.S. Department of Transportation shipping container regulations (49 CFR §173 - Shippers - General Requirements for Shipment and Packaging, and 49 CFR §178 - Specifications for Packaging) for storage of TRU mixed waste at WIPP. The Permittees are prohibited from storing TRU mixed waste in any container not specified in Permit Attachment A1, Section A1-1b, as set forth below:

3.3.1.8. Shielded Container

Each shielded container contains a 30-gallon inner container with a gross internal volume of 4.0 ft^3 (0.11 m^3). Shielded containers contain RH TRU mixed waste, but the shielding will allow it to be managed and stored as CH TRU mixed waste. For the purpose of this Permit, shielded containers will be managed, stored, and disposed as CH TRU mixed waste, but will be counted towards the volume limits associated with RH TRU mixed waste. Shielded containers may be overpacked into a standard waste box or ten drum overpack.

Table 4.1.1 - Underground HWDUs				
Description[1]	**Waste Type**	**Maximum Capacity[2]**	**~~Container Equivalent~~**	**Final Waste Volume**
Panel 1	CH TRU	636,000ft^3 (18,000 m^3)		370,800 ft^3 (10,500 m^3)
Panel 2	CH TRU	636,000 ft^3 (18,000 m^3)		635,600 ft^3 (17,998 m^3)
Panel 3	CH TRU	662,150 ft^3 (18,750 m^3)		603,600 ft^3 (17,092 m^3)
Panel 4	CH TRU	662,150 ft^3 (18,750 m^3)		503,500 ft^3 (14,258 m^3)
	RH TRU	12,570 ft^3 (356 m^3)	~~400 RH TRU Canisters~~	6,200 ft^3 (176 m^3)
Panel 5	CH TRU	662,150 ft^3 (18,750 m^3)		
	RH TRU	15,720 ft^3 (445 m^3)	~~500 RH TRU Canisters~~	
Panel 6	CH TRU	662,150 ft^3 (18,750 m^3)		
	RH TRU	18,860 ft^3 (534 m^3)	~~600 RH TRU Canisters~~	
Panel 7	CH TRU	662,150 ft^3 (18,750 m^3)		
	RH TRU	22,950 ft^3 (650 m^3)	~~730 RH TRU Canisters~~	
Panel 8	CH TRU	662,150 ft^3 (18,750 m^3)		
	RH TRU	22,950 ft^3 (650 m^3)	~~730 RH TRU Canisters~~	
Total	**CH TRU**	**5,244,900 ft^3 (148,500 m^3)**		
	RH TRU	**93,050 ft^3 (2,635 m^3)**	**~~2960 RH TRU Canisters~~**	

[1] The area of each panel is approximately 124,150 ft^2 (11,533 m^2).

[2] "Maximum Capacity" is the maximum volume of TRU mixed waste that may be emplaced in each panel. The maximum repository capacity of "6.2 million cubic feet of transuranic waste" is specified in the WIPP Land Withdrawal Act (Pub. L. 102-579, as amended).

4.3. DISPOSAL CONTAINERS

4.3.1 Acceptable Disposal Containers

The Permittees shall use containers that comply with the requirements for U.S. Department of Transportation shipping container regulations (49 CFR §173 - Shippers - General Requirements for Shipment and Packaging, and 49 CFR §178 - Specifications for Packaging) for disposal of TRU mixed waste at WIPP. The Permittees are prohibited from disposing TRU mixed waste in any container not specified in Permit Attachment A1 (Container Storage), Section A1-1b, as set forth below:

4.3.1.8. Shielded Container

Shielded containers are configured as a three-pack.

A1-1b(2) RH TRU Mixed Waste Containers

Remote-Handled (**RH**) TRU mixed waste containers include RH TRU Canisters, which are received at WIPP loaded singly in an RH-TRU 72-B cask, shielded containers, which are received in HalfPACTs, and 55-gallon drums, which are received in a CNS 10-160B cask.

Shielded Container

Remote-Handled TRU mixed waste received at the WIPP facility in shielded containers will be arranged as three-packs. A summary description of the shielded container is provided below. The shielded container meets the requirements for DOT specification 7A (Figure A1-37).

Shielded containers consist of a 30-gallon inner container with a gross internal volume of 4.0 ft^3 (0.11 m^3). One or more filter vents will be installed in the shielded container lid to prevent the escape of radioactive particulates and to prevent internal pressurization. The shielded container is constructed with approximately one inch of lead shielding on the sides and approximately three inches of steel on the top and bottom of the container and will be used to emplace RH TRU mixed waste. The shielding will allow it to be managed and stored as CH TRU mixed waste.

A1-1d(3) RH TRU Mixed Waste Handling

The RH TRU mixed waste that is not in a shielded container will be received in the RH-TRU 72-B cask or CNS 10-160B cask loaded on a trailer, as illustrated in process flow diagrams in Figures A1-26 and A1-27, respectively. These are shown schematically in Figures A1-28 and A1-29. Remote-Handled TRU mixed waste received in shielded containers will be managed and stored as CH TRU mixed waste. Upon arrival at the gate, external radiological surveys, security checks, shipping documentation reviews are performed and the Uniform Hazardous Waste Manifest is signed. The generator's copy of the Uniform Hazardous Waste Manifest is returned to the generator. Should the results of the contamination survey exceed acceptable levels, the shipping cask and transport trailer remain outside the WHB in the Parking Area Unit, and the appropriate radiological boundaries (i.e., ropes, placards) are erected around the shipping cask and transport trailer. A determination will be made whether to return the cask to the originating site or to decontaminate the cask.

A1-1d(4) Handling Waste in Shielded Containers

Remote-Handled TRU mixed waste received at the WIPP facility in shielded containers will be managed, stored, and emplaced as CH TRU mixed waste using the CH TRU mixed waste handling equipment described in this Permit. Shielded containers with RH TRU mixed waste will arrive by tractor-trailer at the WIPP facility in sealed HalfPACTs, at which time they will undergo security and radiological checks and shipping documentation reviews. Consistent with the handling of HalfPACT shipping packages in Section A1-1d(2), a forklift will remove the HalfPACT and transport it into the WHB and place the HalfPACT at either one of the two TRUDOCKs in the TRUDOCK Storage Area of the WHB Unit.

An external survey of the HalfPACT inner vessel will be performed as the outer containment vessel lid is removed. The inner vessel lid or closure lid will be lifted under the VHS, and the contents will be surveyed during and after this process is complete. A description of the VHS and criteria that are applied if radiological contamination is detected are discussed in Section A1-1d(2).

Shielded containers will be received as three-pack assemblies in HalfPACTs. An overhead bridge crane will be used to remove the contents of the shielded container assembly and place them on a facility pallet. The containers will be visually inspected for physical damage (severe rusting, apparent structural defects, signs of pressurization, etc.) and leakage to ensure they are in good condition prior to storage. Waste containers will also be checked for external surface contamination. If a primary waste container is not in good condition, the Permittees will overpack the container, repair/patch the container in accordance with 49 CFR §173 and §178 (e.g., 49 CFR §173.28), or return the container to the generator.

Once the shielded container assembly is on the facility pallet, the TRU mixed waste container identification numbers will be verified against the Uniform Hazardous Waste Manifest and the WWIS. Inconsistencies will be resolved as discussed in Section A1-1d(2). Up to two three-pack assemblies of shielded containers will be placed on a facility pallet. The use of facility pallets will elevate the waste at least 6 in. (15 cm) from the floor surface. Pallets of waste will then be relocated to the CH Bay Storage Area of the WHB Unit for normal storage or will be transported to the conveyance loading room as described in Section A1-1d(2).

Table A1-2
Waste Handling Equipment Capacities

CAPACITIES FOR EQUIPMENT	
CH Bay overhead bridge crane	12,000 lbs.
Surface forklifts	26,000 lbs. (CH Bay forklift) 70,000 lbs. (TRUPACT-III Handler forklift)
Facility Pallet	25,000 lbs.
Adjustable center-of-gravity lift fixture	10,000 lbs.
Facility Transfer Vehicle	30,000 lbs.
Yard Transfer Vehicle	60,000 lbs.
MAXIMUM GROSS WEIGHTS OF CONTAINERS	
Seven-pack of 55-gallon drums	7,000 lbs.
Four-pack of 85-gallon drums	4,500 lbs.
Three-pack of 100-gallon drums	3,000 lbs.
Ten-drum overpack	6,700 lbs.
Standard waste box	4,000 lbs.
Standard large box 2	10,500 lbs.
Shielded container	2,260 lbs.
Three-pack of shielded containers	7,000 lbs.
MAXIMUM NET EMPTY WEIGHTS OF EQUIPMENT	
TRUPACT-II	13,140 lbs.
HalfPACT	10,500 lbs.
TRUPACT-III	43,600 lbs.
Adjustable center of gravity lift fixture	2,500 lbs.
Facility pallet	4,120 lbs.

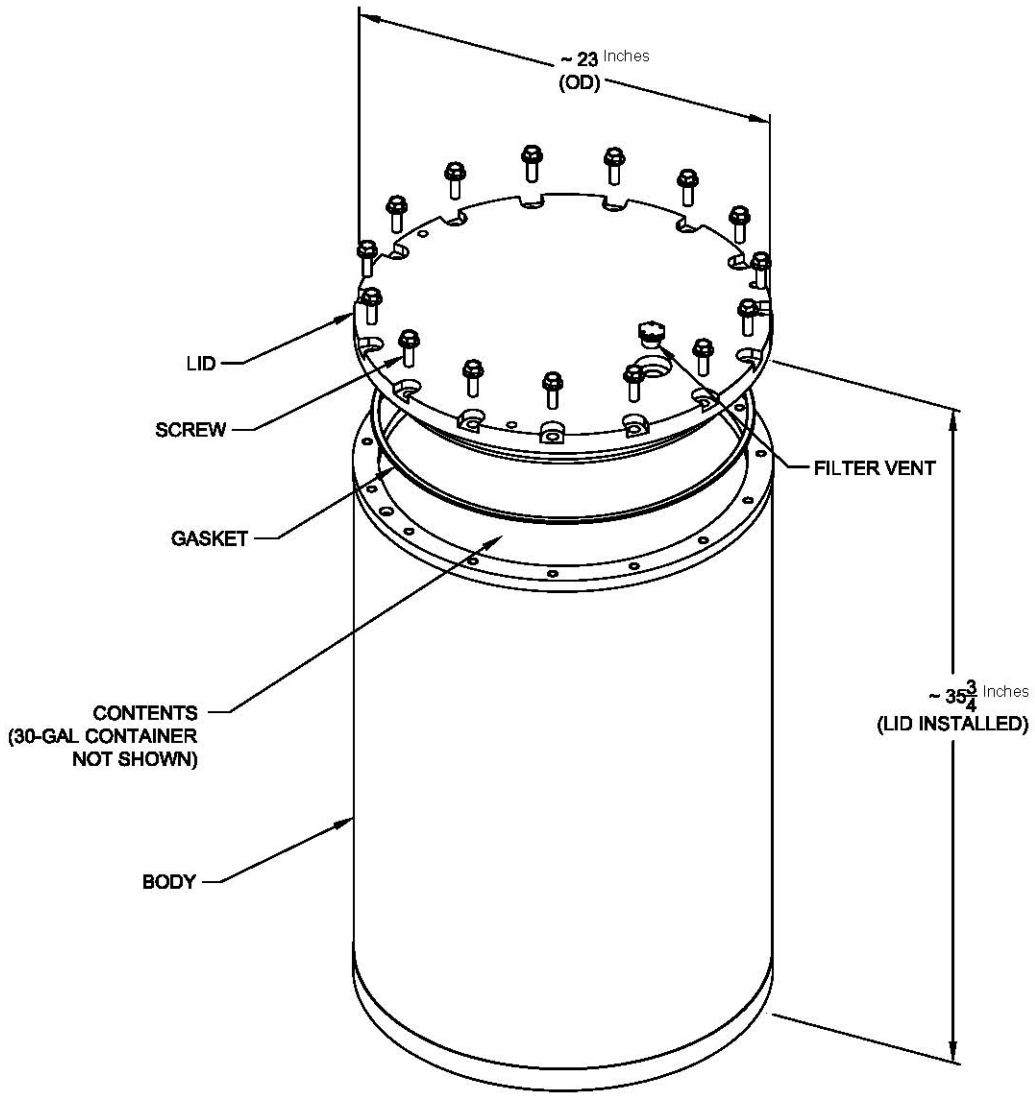

Figure A1-37
Typical Shielded Container

A2-2a(1) CH TRU Mixed Waste Handling Equipment

Facility Pallets

The facility pallet is a fabricated steel unit designed to support 7-packs, 3-packs, or 4-packs of drums, standard waste boxes (**SWBs**), ten-drum overpacks (**TDOPs**), or a standard large box 2 (**SLB2**), and has a rated load of 25,000 pounds (lbs.) (11,430 kilograms (kg)). The facility pallet will accommodate up to four 7-packs, four 3-packs, two 3-packs of shielded containers, ~~or~~ four 4-packs of drums, four SWBs (in two stacks of two units), two TDOPs, or one SLB2. Loads are secured to the facility pallet during transport to the emplacement area. Facility pallets are shown in Figure A2-3. Fork pockets in the side of the pallet allow the facility pallet to be lifted and transferred by forklift to prevent direct contact between TRU mixed waste containers and forklift tines. This arrangement reduces the potential for puncture accidents. WIPP facility operational documents define the operational load of the facility pallet to ensure that the rated load of a facility pallet is not exceeded.

A2-2b Geologic Repository Process Description

CH TRU Mixed Waste Emplacement

CH TRU mixed waste containers and shielded containers will arrive by tractor-trailer at the WIPP facility in sealed shipping containers ~~(e.g., TRUPACT-IIs or HalfPACTs),~~ at which time they will undergo security and radiological checks and shipping documentation reviews. The trailers carrying the shipping containers will be stored temporarily at the Parking Area Container Storage Unit (Parking Area Unit). A forklift will remove the Contact Handled Packages from the transport trailers and a forklift or Yard Transfer Vehicle will transport them into the Waste Handling Building Container Storage Unit for unloading of the waste containers. Each TRUPACT-II may hold up to two 7-packs, two 4-packs, two 3-packs, two SWBs, or one TDOP. Each HalfPACT may hold up to seven 55-gal (208 L) drums, one SWB, one 3-pack of shielded containers, or four 85-gal (322 L) drums. Each TRUPACT-III will hold one SLB2. An overhead bridge crane or Facility Transfer Vehicle with transfer table will be used to remove the waste containers from the Contact Handled Packaging and place them on a facility or containment pallet. Each facility pallet has two recessed pockets to accommodate two sets of 7-packs, two sets of 3-packs, two sets of 4-packs, two SWBs stacked two-high, two TDOPs, or one SLB2. Each stack of waste containers will be secured prior to transport underground (see Figure A2-3). A forklift or the facility transfer vehicle will transport the loaded facility pallet to the conveyance loading room adjacent to the Waste Shaft. The facility transfer vehicle will be driven onto the waste shaft conveyance deck, where the loaded facility pallet will be transferred to the waste shaft conveyance, and the facility transfer vehicle will be backed off. Containers of CH TRU mixed waste (55-gal (208 L) drums, SWBs, 85-gal (322 L) drums, 100-gal (379 L) drums, and TDOPs) or shielded containers can be handled individually, if needed, using the forklift and lifting attachments (i.e., drum handlers, parrot beaks).

Table A2-1
CH TRU Mixed Waste Handling Equipment Capacities

Capacities for Equipment	
Facility Pallet	25,000 lbs.
Facility Transfer Vehicle	26,000 lbs.
Underground transporter	28,000 lbs.
Underground forklift	12,000 lbs.
Maximum Gross Weights of Containers	
Seven-pack of 55-gallon drums	7,000 lbs.
Four-pack of 85-gallon drums	4,500 lbs.
Three-pack of 100-gallon drums	3,000 lbs.
Ten-drum overpack	6,700 lbs.
Standard waste box	4,000 lbs.
Standard large box 2	10,500 lbs.
Shielded container	2,260 lbs.
Three-pack of shielded containers	7,000 lbs.
Maximum Net Empty Weights of Equipment	
TRUPACT-II	13,140 lbs.
HalfPACT	10,500 lbs.
TRUPACT-III	43,600 lbs.
Facility pallet	4,120 lbs.

A4-3 Waste Handling Building Traffic

The TRUPACT-II may hold up to two 55-gallon drum seven-packs, two 85-gallon drum four-packs, two 100-gallon drum three-packs, two standard waste boxes (SWB), or one ten-drum overpack (**TDOP**). A HalfPACT may hold seven 55-gallon drums, one SWB, one shielded container 3-pack, or four 85-gallon drums. The TRUPACT-III holds a single SLB2. A six-ton overhead bridge crane or Facility Transfer Vehicle with a transfer table will be used to remove the contents of the Contact Handled Package. Waste containers will be surveyed for radioactive contamination and decontaminated or returned to the Contact Handled Package as necessary.

Each facility pallet will accommodate four 55-gallon drum seven-packs, four SWBs, four 85-gallon drum four-packs, four 100-gallon drum three-packs, two shielded container 3-packs, two TDOPs, or an SLB2. Waste containers will be secured to the facility pallet prior to transfer. A forklift or facility transfer vehicle will transport the loaded facility pallet the air lock at the Waste Shaft (Figures A4-3, A4-3a, and A4-3b). The facility transfer vehicle will be driven onto the waste shaft conveyance deck, where the loaded facility pallet will be transferred to the waste shaft conveyance and downloaded for emplacement.

C1-1a Method Requirements

For those waste streams without an acceptable knowledge (**AK**) Sufficiency Determination approved by the U.S. Department of Energy (**DOE**), containers shall be randomly selected from waste streams designated as summary category S5000 (Debris waste) and shall be categorized under one of the sampling scenarios shown in Table C1-5 and depicted in Figure C1-1. If the container is categorized under Scenario 1, the applicable drum age criteria (**DAC**) from Table C1-6 must be met prior to headspace gas sampling. If the container is categorized under Scenario 2, the applicable Scenario 1 DAC from Table C1-6 must be met prior to venting the container and then the applicable Scenario 2 DAC from Table C1-7 must be met after venting the container. The DAC for Scenario 2 containers that contain filters or rigid liner vent holes other than those listed in Table C1-7 shall be determined using footnotes “a” and “b” in Table C1-7. Containers that have not met the Scenario 1 DAC at the time of venting must be categorized under Scenario 3. Containers categorized under Scenario 3 must be placed into one of the Packaging Configuration Groups listed in Table C1-8. If a specific packaging configuration cannot be determined based on the data collected during packaging and/or repackaging (Attachment C, Section C-3d(1)), a conservative default Packaging Configuration Group of 3 for 55-gallon drums and shielded containers, 6 for Standard Waste Boxes (**SWBs**) ten-drum overpacks (**TDOPs**), and standard larged box 2s (**SLB2s**), and 8 for 85-gallon and 100-gallon drums must be assigned, provided the drums do not contain pipe component packaging. If a container is designated as Packaging Configuration Group 4 (i.e., a pipe component), the headspace gas sample must be taken from the pipe component headspace. Drums, TDOPs, SLB2s, or SWBs that contain compacted 55-gallon drums containing a rigid liner may not be disposed of under any packaging configuration unless headspace gas sampling was performed before compaction in accordance with this waste analysis plan (**WAP**). The DAC for Scenario 3 containers that contain rigid liner vent holes that are undocumented during packaging, repackaging, and/or venting (Section C1-1a[4][ii]) shall be determined using the default conditions in footnote “b” in Table C1-9.The DAC for Scenario 3 containers that contain filters that are either undocumented or are other than those listed in Table C1-9 shall be determined using footnote ‘a’ in Table C1-9. Each of the Scenario 3 containers shall be sampled for headspace gas after waiting the DAC in Table C1-9 based on its packaging configuration (note: Packaging Configuration Groups 4, 5, 6, 7, and 8 are not summary category group dependent, and 85-gallon drum, 100-gallon drum, SWB, TDOP, and SLB2 requirements apply when the 85-gallon drum, 100-gallon drum, SWB, TDOP, or SLB2 is used for the direct loading of waste).

C1-1a(1) General Requirements

For all retrievably stored waste containers, the rigid liner vent hole diameter must be assumed to be 0.3 inches unless a different size is documented during drum venting or repackaging. For all retrievably stored waste containers, the filter hydrogen diffusivity must be assumed to be the most restrictive unless container-specific information clearly identifies a filter model and/or diffusivity characteristic that is less restrictive. For all retrievably stored waste containers that have not been repackaged, acceptable knowledge shall not be used to justify any packaging configuration less conservative than the default (i.e., Packaging Configuration Group 3 for 55-gallon drums and shielded containers, 6 for SWBs TDOPs, and SLB2s, and 8 for 85-gallon and

100-gallon drums). For information reporting purposes listed above, sites may report the default packaging configuration for retrievably stored waste without further verification.

Drum age criteria apply only to 55-gallon drums, 85-gallon drums, 100-gallon drums, SWBs, TDOPs, ~~and~~ SLB2s, and shielded containers. Drum age criteria for all other container types must be established through permit modification prior to performing headspace gas sampling.

Table C1-8
Scenario 3 Packaging Configuration Groups

Packaging Configuration Group	Covered S5000 Packaging Configuration Groups
Packaging Configuration Group 1, 55-gal drums [a]	• No layers of confinement, filtered inner lid [b] • No inner bags, no liner bags (bounding case)
Packaging Configuration Group 2, 55-gal drums [a]	• 1 inner bag • 1 filtered inner bag • 1 liner bag • 1 filtered liner bag • 1 inner bag, 1 liner bag • 1 filtered inner bag, 1 filtered liner bag • 2 inner bags • 2 filtered inner bags • 2 inner bags, 1 liner bag • 2 filtered inner bags, 1 filtered liner bag • 3 inner bags • 3 filtered inner bags • 3 filtered inner bags, 1 filtered liner bag • 3 inner bags, 1 liner bag (bounding case)
Packaging Configuration Group 3, 55-gal drums and shielded containers [a]	• 2 liner bags • 2 filtered liner bags • 1 inner bag, 2 liner bags • 1 filtered inner bag, 2 filtered liner bags • 2 inner bags, 2 liner bags • 2 filtered inner bags, 2 filtered liner bags • 3 filtered inner bags, 2 filtered liner bags • 4 inner bags • 3 inner bags, 2 liner bags • 4 inner bags, 2 liner bags (bounding case)
Packaging Configuration Group 4, pipe components	• No layers of confinement inside a pipe component • 1 filtered inner bag, 1 filtered metal can inside a pipe component • 2 inner bags inside a pipe component • 2 filtered inner bags inside a pipe component • 2 filtered inner bags, 1 filtered metal can inside a pipe component • 2 inner bags, 1 filtered metal can inside a pipe component (bounding case)
Packaging Configuration Group 5, Standard Waste Box, Ten-Drum Overpack, or Standard Large Box 2 [a]	• No layers of confinement • 1 SWB liner bag (bounding case)

Packaging Configuration Group	Covered S5000 Packaging Configuration Groups
Packaging Configuration Group 6, Standard Waste Box, Ten-Drum Overpack, or Standard Large Box 2 [a]	• any combination of inner and/or liner bags that is less than or equal to 6 • 5 inner bags, 1 SWB liner bag (bounding case)
Packaging Configuration Group 7, 85-gal. drums and 100-gal. drums [a]	• No inner bags, no liner bags, no rigid liner, filtered inner lid (bounding case) [b] • No inner bags, no liner bags, no rigid liner
Packaging Configuration Group 8, 85-gal. drums and 100-gal. drums [a]	• 4 inner bags and 2 liner bags, no rigid liner, filtered inner lid (bounding case) [b]

[a] If a specific Packaging Configuration Groups cannot be determined based on the data collected during packaging and/or repackaging, a conservative default Packaging Configuration Group of 3 for 55-gallon drums and shielded containers, 6 for SWBs, TDOPs, and SLB2s, and 8 for 85-gallon and 100-gallon drums must be assigned provided the drums do not contain pipe component packaging. If pipe components are present as packaging in the drums, the pipe components must be sampled following the requirements for Packaging Configuration Group 4.

[b] A “filtered inner lid” is the inner lid on a double lid drum that contains a filter.

Definitions:

Liner Bags: One or more optional plastic bags that are used to control radiological contamination. Liner bags for drums have a thickness of approximately 11 mils. Liner bags are typically similar in size to the container. SWB liner bags have a thickness of approximately 14 mils. TDOPs and SLB2s use SWB liner bags.

Inner Bags: One or more optional plastic bags that are used to control radiological contamination. Inner bags have a thickness of approximately 5 mils and are typically smaller than liner bags.

D-1d Description of Containers

Remote-Handled TRU mixed waste may arrive in shielded containers with an internal capacity of 4.0 ft^3 (0.11 m^3). Shielded containers will be arranged as three-packs.

D-1e(1) CH Bay Operations

Once unloaded from the Contact-Handled Package, CH TRU mixed waste containers (3-pack of shielded containers, 7-packs of 55-gal drums, 3-packs of 100-gal drums, 4-packs of 85-gal drums, SWBs, TDOPs, or one SLB2) are placed on the facility pallet. The waste containers are stacked on the facility pallets (one- or two-high, depending on weight considerations). The use of facility pallets will elevate the waste at least 6 inches (in.) (15 centimeters [cm]) from the floor surface. Pallets of waste will then be stored in the CH bay. This storage area will be clearly marked to indicate the lateral limits of the storage area. This storage area will have a maximum capacity of thirteen facility pallets of waste during normal operations. These pallets will typically be in the CH Bay storage area for a period of up to five days.

D-4d(1) All Emergencies

For RH TRU mixed waste that is not managed in shielded containers, the detection of contamination on or damage to a RH TRU mixed waste canister or a facility canister may occur outside the Hot Cell during cask to cask transfer of the canister or during loading of the Shielded Insert in the Transfer Cell. When such contamination or damage is found, the Permittees have the option to decontaminate or return the canister to the generator/storage site or another site for remediation. In the case of a damaged facility canister, the Shielded Insert may be used as an overpack to facilitate further management. Contamination may also be detected within the Hot Cell during the unloading of the CNS 10-160B shipping cask. In this case, the Permittees may decontaminate the 55-gallon drums or return them to the generator/storage site or another site for remediation. Spills or releases that occur within the RH Complex or the underground as the result of RH TRU mixed waste handling will be mitigated by using appropriate measures which may include the items above.

D-4d(6) Control of Spills or Leaking or Punctured Containers of CH and RH TRU Mixed Waste

CH TRU Mixed Waste

Prior to the re-entry following an event involving containers that are managed as ~~of~~ CH TRU mixed waste, a Radiological Work Permit (**RWP**) is written for personnel to enter with protective clothing to assess the conditions, take surveys and samples, and mitigate problems that could compound the hazards in the area (cover up spilled material with plastic material sheeting and

or any approved fixatives such as polyvinyl alcohol (**PVA**) or paint, place equipment in a safe configuration, etc.). During the re-entry phase, smears and air sample filters are taken and counted. This information is used by cognizant managers, RC personnel, and As Low As Reasonably Achievable (**ALARA**) Committee representatives to determine an appropriate course of action to recover the area. A plan to decontaminate and recover affected areas and equipment will be approved with a separate RWP written to establish the radiological controls required for the recovery.

E-1b(1) Container Inspection

Containers are used to manage TRU mixed waste at the WIPP facility. These containers are described in Permit Part 3. Off-site ~~CH TRU mixed~~ waste that will be managed and stored as CH TRU mixed waste will arrive in 55-gallon drums arranged as seven (7)-packs, in Ten Drum Overpacks (**TDOP**), in 85-gallon drums arranged as four (4) packs, in 100-gallon drums arranged as three (3) packs, in standard waste boxes (**SWB**), ~~or~~ in standard large box 2s (**SLB2s**) or shielded containers as (3)-packs. The waste containers will be visually inspected to ensure that the waste containers are in good condition and that there are no signs that a release has occurred. This visual inspection shall not include the center drums of 7-packs and waste containers positioned such that visual observation is precluded due to the arrangement of waste assemblies on the facility pallets. If CH TRU mixed waste handling operations should stop for any reason with containers located on the TRUPACT-II Unloading Dock (**TRUDOCK** storage area of the WHB Unit) or in room 108 while still in the Contact-Handled Packages, primary waste container inspections could not be accomplished until the containers of waste are removed from the shipping containers.

As described in Permit Attachment A1, Section A1-1d(3), off-site waste that will be managed and stored as RH TRU mixed waste will arrive in containers inside Nuclear Regulatory Commission (**NRC**)-certified casks designed to provide shielding and facilitate safe handling. Canisters, will be loaded singly into an RH-TRU 72-B cask. Drums will be loaded into a CNS 10-160B cask. The cask will be visually inspected upon arrival. Because RH TRU mixed waste is stored in the Parking Area Unit in sealed casks, there are no additional requirements for engineered secondary containment systems. Following removal of the canisters and drums, the interior of the cask will be inspected and surveyed for evidence of contamination that may have occurred during transport.

Off-site waste that will be managed and stored as RH TRU mixed waste is ~~handled~~ managed and stored in the RH Complex of the WHB. The RH Complex includes the following: RH Bay, the Cask Unloading Room, the Hot Cell, the Transfer Cell, and the Facility Cask Loading Room. As RH TRU mixed waste is held in canisters within a canister rack the physical inspection of the drum or canister is not possible. Inspections of RH TRU mixed waste in these areas occurs remotely via closed-circuit cameras a minimum of once weekly when stored waste is present. Because RH TRU mixed waste is in sealed casks, there are no additional requirements for engineered secondary containment systems. However, the floors in the RH Complex (including the RH Bay, Facility Cask Loading Room and Cask Unloading Room) are coated concrete and during normal operations (i.e., when waste is present), the floor of the RH Complex is inspected visually or by using close-circuit cameras on a weekly basis to verify that it is in good condition and free of visible cracks and gaps.

G3-4a TRU Mixed Waste Processing

Tables G3-2 and G3-3 specify the various steps in the process of receiving and disposing containers of CH TRU mixed waste, including RH TRU mixed waste in shielded containers and RH TRU mixed waste, respectively, where radiological surveys will be performed by the Permittees. WIPP Procedure WP 12-HP1100 provides the detailed description of methods and equipment used when performing surface contamination surveys, dose rate surveys, and large area wipes.

ATTACHMENT H1

ACTIVE INSTITUTIONAL CONTROLS DURING POST-CLOSURE

Introduction

Upon receipt of the necessary certifications and permits from the EPA and the New Mexico Environment Department, the Permittees will begin disposal of contact-handled (**CH**) and remote-handled (**RH**) TRU and TRU mixed waste in the WIPP. This waste emplacement and disposal phase will continue until the regulated capacity of the repository of 6,200,000 cubic feet (175,588 cubic meters) of TRU and TRU mixed waste has been reached, and as long as the Permittees comply with the requirements of the Permit. For the purposes of this Permit Attachment, this time period is assumed to be 25 years. The waste will be shipped from DOE facilities across the country in specially designed transportation containers certified by the Nuclear Regulatory Commission. The transportation routes from these facilities to the WIPP have been predetermined. The CH TRU mixed waste will be packaged in 55-gallon (208-liter), 85-gallon (322-liter), 100-gallon (379-liter) steel drums, standard waste boxes (**SWBs**), ten drum overpacks (**TDOPs**), and/or standard large box 2s (**SLB2s**). An SWB is a steel container having a free volume of 66.3 cubic feet (1.88 cubic meters). Figure H1-2 shows the general arrangement of a seven-pack of drums and an SWB as received in a Contact-Handled Package. RH TRU mixed waste inside a Remote-Handled Package is contained in one or more of the allowable containers described in Permit Attachment A1. Some RH TRU mixed waste may arrive in shielded containers as described in Permit Attachment A1.

Appendix C

This page is intentionally left blank

EVALUATION OF DRUM AGE CRITERIA FOR THE SHIELDED CONTAINER

April 2012
Revision 3

Prepared for:
Washington TRU Solutions, LLC
PO Box 2078
4021 National Parks Highway
Carlsbad, New Mexico 88221

Prepared by:
Shaw Environmental, Inc.
2440 Louisiana Blvd. NE
Suite 300
Albuquerque, New Mexico 87110

Table of Contents

List of Figures i
List of Appendices i
Acronyms and Abbreviations ii

1.0 Background and Purpose 1
2.0 Methodology 3
3.0 Results 7
4.0 References 8

List of Figures

Figure 1 Shielded Container
Figure 2 VDRUM Model of Shielded Container Packaging Configuration

List of Appendices

Appendix A Input and Output Files Associated with the Shielded Container and 30-Gallon Drum DAC Value Determination

Acronyms and Abbreviations

atm	atmosphere
CH-TRU	contact-handled transuranic
DAC	drum age criterion
K	Kelvin
mol/s/mol fraction	mole/second/mole fraction
TRU	transuranic
VOC	volatile organic compound

1.0 Background and Purpose

Containers of transuranic (TRU) waste must meet a minimum age criterion before a volatile organic compound (VOC) gas sample collected from the waste container headspace is considered representative of the VOCs within the container. The drum age criterion (DAC) is the time required after container closure, or after container closure and container venting, before a headspace gas sample can be collected. The methodology described in "Determination of Drum Age Criteria and Prediction Factors Based on Packaging Configurations" (BWXT, 2000) is the basis for the packaging-specific DAC values for debris waste (summary category S5000) currently approved in the Hazardous Waste Facility Permit for the Waste Isolation Pilot Plant ("Permit") (NMED, current version).

The shielded container is a new waste container that has been proposed for disposal at the WIPP. The shielded container is a vented carbon steel and lead cylindrical assembly with a removable lid. It is approved for the shipment of transuranic (TRU) waste in the HalfPACT package. Up to three (3) shielded containers can be shipped within a HalfPACT package.

The shielded container is designed to carry one 30-gallon payload drum. A partially exploded view of the shielded container, including its 30-gallon payload drum, is provided in Figure 1. In addition to the 30-gallon payload drum, the shielded container may contain an optional 30-gallon drum handling bag, which is cylindrical in shape with an open top. The bag is made of a coated and woven polypropylene fabric with an internal diameter of approximately 20.25 inches and a height of 25 inches. The surface area associated with a bag holding the 30-gallon drum is approximately 1,590 square inches (10,261 square centimeters). The drum handling bag has a thickness of approximately 24 mil. The bottom portion of the bag is lined with 8-ounce geo-textile material. An alternative to the 30-gallon drum handling bag is a sling that is open at both the top and bottom and is approximately 8-mil thick. Two continuous loops of nylon webbing intersect each other at the bottom center of the sling to support the bottom of the 30-gallon drum.

The shielded container and 30-gallon drum must each be installed with a filter vent. Contact-handled TRU (CH-TRU) waste is placed into a vented 30-gallon drum, which is then loaded into the shielded container.

Packaging-specific DAC values were previously determined for a number of packaging configurations (BWXT, 2000, Shaw 2003). The DAC for each packaging configuration was determined using the computer program VDRUM that solved a series of differential equations describing the VOC transport phenomena within the waste container (BWXT, 2000 and Connolly et al, 1998). Model input parameters include the physical properties of VOCs, the initial concentration profile in the waste container, physical dimensions of each confinement

layer (thickness, surface area, void volume), and the hydrogen diffusion characteristics of filter vents installed on the waste containers (BWXT, 2000 and Connolly et al, 1998). Model parameters and assumptions used in determining the DAC values have also been documented (Shaw 2003, BWXT, 2000 and Connolly et al, 1998).

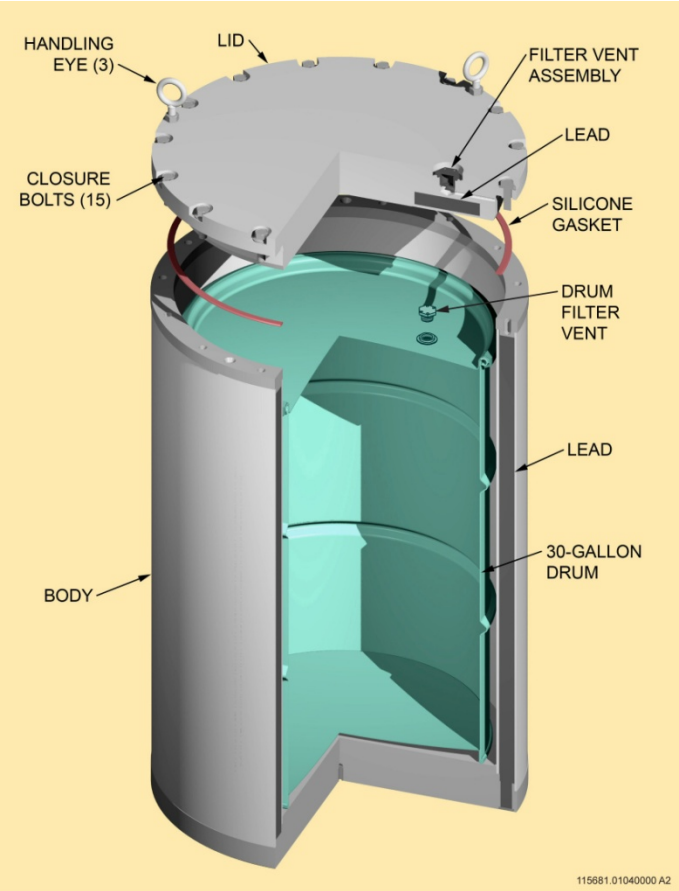

Figure 1
Shielded Container

The purpose of this report is to demonstrate that separate DAC values are not required for the shielded container or the 30-gallon drum (to allow for headspace sampling of stand-alone 30-gallon drum before being placed in the shielded container) because the existing 55-gallon drum default DAC values under Scenario 3, Packaging Configuration Group 3 (debris waste, summary category S5000) serve as reference upper bounds for the shielded container and 30-gallon drum packaging configurations, and therefore can be conservatively applied to the shielded container or 30-gallon drum. The inside volume of an empty shielded container is approximately 159 liters (Day, 2008) compared to 208 liters for an empty 55-gallon drum. As

the waste will be loaded in a 30-gallon drum, a shielded container packaging configuration (and, by definition, the 30-gallon drum configuration) will hold less waste and has less available void volume than a typical 55-gallon drum loaded with debris waste. In addition, the shielded container packaging configurations will not use a rigid drum liner. Based on sensitivity studies (BWXT, 2000) these differences should result in lower DACs for the shielded container, and therefore the default 55-gallon drum DACs under Scenario 3, Packaging Configuration Group 3, should serve as conservative upper bounds. The next sections demonstrate that the DAC value for the shielded container (and the stand-alone 30-gallon drum) is indeed bounded by the existing 55-gallon drum packaging configuration DAC.

2.0 Methodology

All assumptions and parameters used in previous DAC calculations have been documented (Shaw 2003, BWXT, 2000). The VDRUM code was used to determine the DAC for a shielded container packaging configuration and 30-gallon drum configuration comparable to that of the 55-gallon drum. Parameter values specific to the shielded container DAC evaluation are discussed below and are listed in the input file included in Appendix A. Additional assumptions used in determining the DAC value for the shielded container are presented in this section.

A conservative inner packaging configuration was selected for the shielded container for this analysis. The packaging configuration consists of debris waste packaged in six plastic bags (i.e., four inner bags packaged in two liner bags). The optional 30-gallon drum handling bag (if used) is completely open at the top and made of a permeable mesh fabric and the sling (if used) is open at both the top and bottom. As a conservative measure in the DAC calculation for the shielded container packaging configuration, the 30-gallon drum handling bag is modeled by the VDRUM code as an additional drum liner bag with a twist-and-tape (closed) closure, which is conservative with regard to VOC equilibrium. Selection of this configuration is conservative as it will result in a longer DAC than the likely shielded container configuration with fewer bags. The bags are placed in a vented 30-gallon drum that is then placed inside a vented shielded container. There is no rigid drum liner in this packaging configuration. Both the 30-gallon drum and the shielded container are each assumed to be fitted with a filter vent with a hydrogen diffusivity characteristic of 1.85E-5 mole/second/mole fraction (mol/s/mol fraction). This filter is commonly used for new packaging configurations. The modeling of the shielded container packaging configuration is depicted in Figure 2. The calculated DAC for the shielded container configuration, as well as the DAC for the stand-alone 30-gallon drum, will be compared to the default Scenario 3, Packaging Configuration Group 3 DAC in Table C1-9 of the Permit (NMED, current version) for a 55-gallon drum with 4 inner bags, 2 liner bags, no rigid drum liner and a filter hydrogen diffusivity value of 3.7E-6 mol/s/mol fraction. The size and thickness of the bags

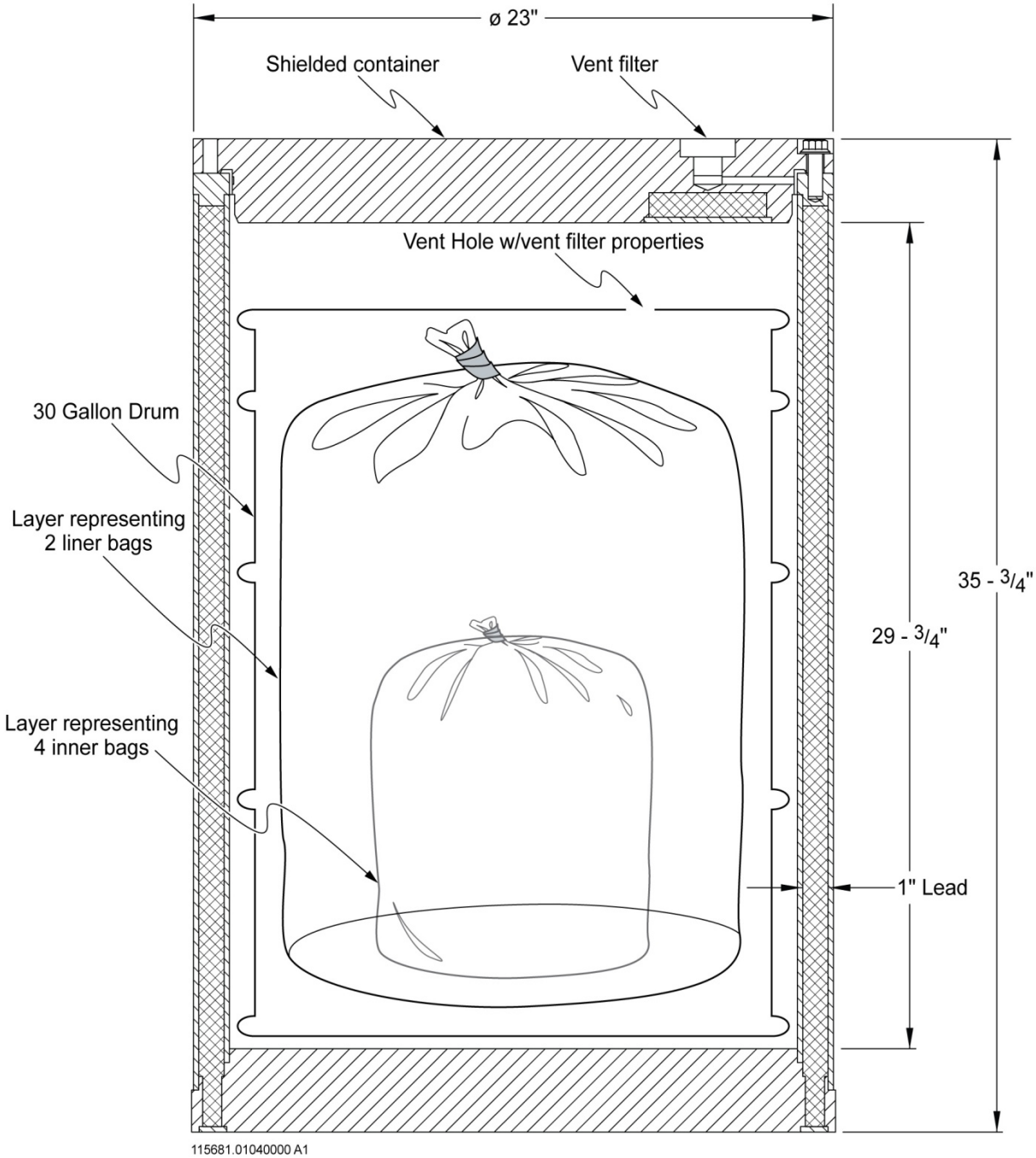

Note: Optional 30-gallon drum handling bag not shown.

Figure 2
VDRUM Model of Shielded Container Packaging Configuration

is assumed to be the same as for the 55-gallon drum. Other parameter values are documented in Appendix A.

VOCs permeate across the inner and liner bags, diffuse out of the 30-gallon drum vent, into the shielded container headspace, and finally diffuse out through the shielded container filter vent.

In this and all previous DAC calculations (Shaw 2003, BWXT, 2000 and Connolly et al, 1998), it is conservatively assumed that the VOC concentration within the innermost confinement layer is constant due to thermodynamic equilibrium of the gas phase surrounding the VOC-contaminated waste matrix.

To model this configuration using VDRUM, the hydrogen diffusion value of the 30-gallon drum filter vent is expressed as an equivalent surface area of the opening in the lid. If the transport rate of a VOC across a filter vent and an opening are set equal to each other (BWXT, 2000), then an equivalent opening surface area can be defined in terms of the VOC diffusivity across the filter vent:

$$D^*_{VOC}\Delta y = \frac{D_{VOC} A_d c}{x_d}\Delta y \tag{1}$$

where

D^*_{VOC} = VOC diffusivity across filter vent, mole s^{-1}

D_{VOC} = VOC diffusivity in air, cm^2 s^{-1}

A_d = surface area of opening in confinement layer, cm^2

c = gas concentration, mole cm^{-3}

x_d = thickness of confinement layer at opening, cm

Δy = VOC mole fraction difference across confinement layer

Rearranging Equation (1) yields

$$A_d = \frac{D^*_{VOC} x_d}{D_{VOC} c} \tag{2}$$

From Shaw, 2003 the ratio of VOC diffusivity across a filter vent to that across air is assumed equivalent to the ratio of hydrogen across a filter vent to that of hydrogen in air:

$$\frac{D^*_{VOC}}{D_{VOC}} = \frac{D^*_{H_2}}{D_{H_2}} \tag{3}$$

where

D^*_{H2} = Hydrogen diffusivity across filter vent, mole s^{-1}

D_{H2} = Hydrogen diffusivity in air, cm^2 s^{-1}

Therefore, the equivalent surface area of an opening in a confinement layer can be expressed in terms of hydrogen diffusivity across the filter vent in the confinement layer

$$A_d = \frac{D^*_{H_2} x_d}{D_{H_2} c} \tag{4}$$

The ideal gas law estimates the gas concentration:

$$c = \frac{P_{atm}}{RT} \tag{5}$$

where

P_{atm} = pressure, atmosphere (atm)

T = temperature, Kelvin (K)

R = gas constant = 82.06 cm^3 atm/(g-mole) K

Hydrogen diffusivity is estimated using the Fuller, Schettler, and Giddings equation (Shaw, 2003):

$$D_{H_2} = \frac{0.00143T^{1.75}}{PM^{0.5}_{H_2,air}\left[(\Sigma_v)^{1/3}_{H_2} + (\Sigma_v)^{1/3}_{air}\right]^2} \tag{6}$$

where

T = gas temperature, K

P = pressure, bar

$M_{H2,air} = 2\,[1/M_{H2} + 1/M_{air}]^{-1}$

M_i = molecular weight of component i, gram (gram-mole)$^{-1}$

$(\Sigma_v)_i$ = atomic diffusion volume of component i

where

$M_{H2} = 2.016$ $(\Sigma_v)_i = 6.12$

$M_{air} = 28.97$ $(\Sigma_v)_i = 19.7$ (BWXT, 2000)

In the case of hydrogen-air system at T = 298.2 K and P = 1 atmosphere = 1.01325 bar, the diffusivity is:

$$D_{H2} = 0.758\ cm^2\ s^{-1}$$

Assuming an area thickness of 1.0 cm, the equivalent surface area for the 30-gallon drum filter vent of 1.85 x 10^{-5} mol/s/mol fraction diffusivity is the following:

$$A_d = \frac{1.85x10^{-5}(82.06)(298.2)}{0.758} = 0.597\ cm^2$$

3.0 Results

The DAC calculated using an established methodology (BWXT, 2000) for a representative shielded container packaging configuration is documented in the output file included in Appendix A. The longest DAC is 16 days based on the VOC methyl isobutyl ketone. This DAC is equivalent to the Scenario 3, Packaging Configuration Group 3 DAC of 16 days in Table C1-9 of the Permit (NMED, current version) for a 55-gallon drum with 4 inner bags, 2 liner bags (bounding case), no rigid drum liner, and a filter hydrogen diffusivity value of 3.7E-6 mol/s/mol fraction. Thus, the analysis has demonstrated that separate DAC values are not required for the representative shielded container packaging configuration because the existing default 55-gallon drum DACs under Packaging Configuration Group 3 serve as upper bounds and should be used.

The DAC for directly sampling the headspace of the 30-gallon drum, prior to placing in a shielded container, was also evaluated. This DAC, calculated as 10 days, is also bounded by the Packaging Configuration Group 3 DAC of 16 days in Table C1-9 of the Permit (NMED, current version) for a 55-gallon drum. The input and output files for the 30-gallon drum configuration are also presented in Appendix A.

4.0 References

BWXT, see Liekhus, K.J., S.M. Djordjevic, M. Devarakonda, and M.J. Connolly.

Connolly, M.J. et al., 1998, *Position for Determining Gas Phase Volatile Organic Concentrations in Transuranic Waste Containers*, INEEL-95/0109, Rev. 2, Idaho National Engineering Laboratory, Idaho Falls, ID (1998).

Day, B., 2008, *Calculation of Void Volume Inside a Shielded Container Loaded with a 30-gal Drum using a Polypropylene Drum Handling Bag*, Washington TRU Solutions LLC, Carlsbad, New Mexico.

Liekhus, K.J., S.M. Djordjevic, M. Devarakonda, and M.J. Connolly (BWXT), 2000, *Determination of Drum Age Criteria and Prediction Factors Based on Packaging Configurations*, INEEL/EXT-2000-01207, Idaho National Engineering and Environmental Laboratory, Idaho Falls, Idaho.

New Mexico Environment Department (NMED), current version, *Waste Isolation Pilot Plant Hazardous Waste Facility Permit*, NM4890139088-TSDF, New Mexico Environment Department, Santa Fe, New Mexico.

NMED, see New Mexico Environment Department

Shaw, see Shaw Environmental and Infrastructure, Inc.

Shaw Environmental and Infrastructure, Inc. (Shaw), 2003, Determination of Drum Age Criteria Values for Ten-Drum Overpacks, 85-Gallon Drums, and 100-Gallon Drums, Revision 1, Shaw Environmental and Infrastructure, Inc, Albuquerque, New Mexico.

Appendix A
Input and Output Files Associated with the Shielded Container and 30-Gallon Drum DAC Value Determination

This appendix includes the input and output files for the shielded container and the 30-gallon drum that document the calculation of DAC values using the methodology described in BWXT (2000).

The computer program VDRUM used for deriving DAC values in BWXT (2000) employs input files of required data and reports the time for volatile organic compounds (VOCs) to reach at least 90 percent of their steady state concentrations. The input file for each packaging configuration includes the same data structure beginning with the input and output file names and the number of VOCs evaluated. Each VOC included in the analysis has two lines of input data, the initial concentrations in the layers of confinement and the physical and chemical properties. The physical characteristics, such as thickness and surface area, of each type of confinement layer are entered.

To determine the drum age criteria, the greatest time in days is selected from the VOCs (shown in bold in the output data listing). The data structures for the input and output files are shown in the following sections.

Input File Format

Line 1: Input file name, output file name, number of VOCs evaluated

Line 2: Name of VOC #1, $[IB]_0$, $[LB]_0$, $[LHS]_0$, $[DHS]_0$

Where:

$[IB]_0$ – Initial VOC concentration (ppmv) in inner bags
$[LB]_0$ – Initial VOC concentration (ppmv) in liner bags
$[LHS]_0$ – Initial VOC concentration (ppmv) in drum liner headspace
$[DHS]_0$ – Initial VOC concentration (ppmv) in drum headspace

Line 3: MW, ρ, D, T_c, P_c, D*, H, k, G (see Reference 1 for VOC-specific values)

Where:

MW – VOC molecular weight (g/gmol)
ρ – VOC permeability in polyethylene @ 25ºC, cm^3(STP) cm^{-1} sec^{-1} $(cmHg)^{-1}$
D – VOC diffusivity in air @ 25ºC, cm^2 s^{-1}
T_c – VOC critical temperature, K
P_c – VOC critical pressure, atm
D* – VOC diffusivity across filter vent, mol/s/mol fraction
H – VOC Henrys constant for polyethylene drum liner, (cm^3 polymer) atm/(cm^3 (STP) gas)
k – VOC mass transfer coefficient at drum liner surface, s^{-1}
G – VOC generate rate (always set to 0 (zero)).

Lines (2n, 2n+1): Information for n^{th} (last) VOC

Line (2n+2): $A_p(1)$, $A_d(1)$, $V(1)$, $x_p(1)$, $x_d(1)$

Line (2n+3): $A_p(2)$, $A_d(2)$, $V(2)$, $x_p(2)$, $x_d(2)$

Line (2n+4): $A_p(3)$, $A_d(3)$, $V(3)$, $x_p(3)$, $x_d(3)$

Line (2n+5): $A_p(4)$, $A_d(4)$, $V(4)$, $x_p(4)$, $x_d(4)$

Where:

A_p – permeable surface area, cm^2
A_d – diffusional cross-sectional area, cm^2
V – void volume inside layer of confinement, cm^3
x_p – layer thickness, cm
x_d – length of diffusional path length, cm
1 – inner bag
2 – drum liner bag
3 – drum liner headspace
4 – drum headspace

Line (2n+6): T, P, D_v*

Where:

T – gas temperature = 25°C
P – gas pressure = 76 cm Hg
D_v* – hydrogen diffusion characteristic across drum filter vent, mol/s/mol fraction

Output File Format

Line 1: Input file name

Lines 2, n+1: VOC, DAC, [DAC], [SS]

Where:

VOC – name of VOC
DAC – drum age criterion, days
[DAC] – VOC concentration at the time of the DAC value, ppmv
[SS] – VOC concentration at steady-state conditions, ppmv

Specific information about data input includes the following:

- The hydrogen release rate across the 30-gallon drum is defined by the hydrogen diffusivity of the filter vent. The DAC value was calculated for a diffusivity value of 1.85E-5 mol/s/mol fraction for the 30-gallon drum filter vent.

- T_c, P_c are required if D = 0 (i.e., when VOC diffusivity in air is not specified).
- T_c, P_c, D_v* are required if D* = 0 (i.e., when VOC diffusivity across filter vent is not specified) and the drum is vented.
- If D > 0 and D* > 0 (i.e., when diffusivities are specified), T_c and P_c can equal zero.
- No VOC gas generation is assumed; therefore, g equals zero.
- Only gas permeation across bags is considered, so $A_d = x_d = 0$ (for bags only).
- Although a rigid drum liner is not included in the packaging configuration, the VDRUM model includes a rigid drum liner layer in the input file and specification of A_p and x_p is required to estimate the volume of liner material. In order to nullify the effects of resistance to permeation of the non-existent rigid drum liner, x_p is set to a very small, non-zero value as shown in the input file, making the resistance to permeation of VOCs through this layer negligible.
- The shielded container packaging configuration parameter values are assumed to be the same as those for the corresponding 55-gallon drum (BWXT, 2000) values of bag thickness and surface area.
- The 30-gallon drum handling bag, though open at the top, is conservatively modeled as a liner bag with twist and tape closure. The bag adds a thickness of 0.028 cm for 0.084 cm total. These values are shown in the corresponding input file.
- Assumptions for void volumes between the inner and liner bags and within the 30-gallon drum headspace are scaled by a factor of 30/55 from the corresponding 55-gallon drum void volumes previously used (BWXT, 2000). Thus, the void volume between inner and liner bags is 10,900 cm^3 (scaled from the 55-gallon drum value of 20,000 cm^3). The void volume in the 30-gallon drum headspace is 15,300 cm^3 (scaled from the 55-gallon drum value of 28,000 cm^3)
- The void volume between the 30-gallon drum and the shielded container is 37,284 cm^3 (Day, 2008).
- The release rate from the shielded container filter vent was set to a diffusivity of 1.85E-5 mol/s/mol fraction. Because VDRUM only allows entry of one filtered layer of confinement, the filter on the 30-gallon drum was accounted for by adjusting the parameter values for diffusion through the rigid drum liner layer hole to match the characteristics of the 30-gallon drum filter diffusion (the rigid drum liner layer is required in the VDRUM model). The modeled dimensions of the rigid drum liner hole are adjusted so the effective release rate equals the diffusivity value of 1.85E-5 mol/s/mol fraction 30-gallon drum filter vent. The 1.85E-5 mol/sec/mol fraction filter vent is modeled as a hole with an area of 0.597 cm^2 through a 1.0 cm thick layer.

Input File for Shielded Container DAC Evaluation

```
'shieldcontvdrum','shieldcontvdrum.out',12
'carbon tetrachloride',1000.,0.,0.,0.
153.82,193.e-10,0.0,556.4,45.0,0.,0.0217,6.e-5,0.
'methanol',1000.,0.,0.,0.
32.0,135.e-10,0.,513.2,78.5,0.,0.0272,2.4e-7,0.
'dichloromethane',1000.,0.,0.,0.
84.9,263.e-10,0.,510.,62.2,0.,0.0431,2.e-6,0.
'toluene',1000.,0.,0.,0.
92.1,669.e-10,0.0,591.8,40.5,0.,0.002857,7.e-6,0.
'trichloroethylene',1000.,0.,0.,0.
131.4,583.e-10,0.0,572.0,49.8,0.,0.00640,6.e-5,0.
'butanol',1000.,0.,0.,0.
74.1,300.e-10,0.,563.1,43.6,0.,0.02273,8.e-6,0.
'chloroform',1000.,0.,0.,0.
119.4,260.e-10,0.,536.4,53.0,0.,0.04545,8.e-6,0.
'1,1-dichloroethene',1000.,0.,0.,0.
96.9,110.e-10,0.,513.0,47.5,0.,0.09091,8.e-6,0.
'methyl ethyl ketone',1000.,0.,0.,0.
72.1,165.e-10,0.,536.8,41.5,0.,0.03704,8.e-6,0.
'methyl isobutyl ketone',1000.,0.,0.,0.
100.2,130.e-10,0.,571.0,32.3,0.,0.01724,8.e-6,0.
'1,1,2,2-tetrachloroethane',1000.,0.,0.,0.
167.9,2300.e-10,0.,661.2,57.6,0.,0.003846,8.e-6,0.
'chlorobenzene',1000.,0.,0.,0.
112.6,600.e-10,0.,632.4,44.6,0.,0.007692,8.e-6,0.
14000.,0.,0.,0.050,0.
14000.,0.,10900.,0.084,0.
12800.,0.597,15300.,0.00005,1.0
0.,0.,37284.,0.,0.
25.,76.,1.85e-5

c       shielded container, w/30-gal drum, each w/ filter vent, 4 inner bags, 2 liner bags
c         30-gallon drum handling bag modeled as a twist and tape liner bag even though
c         bag is open at top. The bag adds a thickness of 0.028 cm for 0.084 cm total.
c       Value for volume within innermost bags not required.
c       Void volume between bags: 10,900 cm3 (scaled from 55-gal drum value of 20,000 cm3)
c       Bag thickness same as Scenario 3
c       Void volume in 30-gal drum headspace = 15,300 cm3 (scaled from 55-gal drum value of 28,000 cm3)
c       Void volume between 30-gal and shielded container: 37,284 cm3
c       No liner so no solubility for VOCs (thus, 30-gal drum as  "liner thickness" xp = 0.00005 cm)
c       Effective surface area across 30-gal drum filter (assuming xd = 1.0 cm): Ad = 0.597 cm2
c       so effective H2 release rate equals 30-gal drum filter vent, D*(H2) = 1.85e-5 mol/s/mol fraction
c       D*H2 = total H2 diff. char. across shielded container filter vent = 1.85e-5 mol/s/mol fr
c       VOC diff. char. estimated knowing D*H2, VOC Tc, VOC Pc
```

Output File for Shielded Container DAC Evaluation

shieldcontvdrum

carbon tetrachloride	14	399.5111	438.5642
methanol	11	346.9043	379.4464
dichloromethane	11	403.0082	443.6181
toluene	12	436.2250	480.7493
trichloroethylene	12	436.7753	477.0292
butanol	12	412.6895	456.2111
chloroform	12	406.4105	448.6669
1,1-dichloroethene	15	359.0007	392.9815
methyl ethyl ketone	14	389.6570	425.0542
methyl isobutyl ketone	**16**	**380.5107**	**419.6800**
1,1,2,2-tetrachloroethane	11	444.8763	493.8665
chlorobenzene	12	431.7012	479.1213

Input File for 30-Gallon Drum DAC Evaluation

```
'30galdrum','30galdrum.out',12
'carbon tetrachloride',1000.,0.,0.,0.
153.82,193.e-10,0.0,556.4,45.0,0.,0.0217,6.e-5,0.
'methanol',1000.,0.,0.,0.
32.0,135.e-10,0.,513.2,78.5,0.,0.0272,2.4e-7,0.
'dichloromethane',1000.,0.,0.,0.
84.9,263.e-10,0.,510.,62.2,0.,0.0431,2.e-6,0.
'toluene',1000.,0.,0.,0.
92.1,669.e-10,0.0,591.8,40.5,0.,0.002857,7.e-6,0.
'trichloroethylene',1000.,0.,0.,0.
131.4,583.e-10,0.0,572.0,49.8,0.,0.00640,6.e-5,0.
'butanol',1000.,0.,0.,0.
74.1,300.e-10,0.,563.1,43.6,0.,0.02273,8.e-6,0.
'chloroform',1000.,0.,0.,0.
119.4,260.e-10,0.,536.4,53.0,0.,0.04545,8.e-6,0.
'1,1-dichloroethene',1000.,0.,0.,0.
96.9,110.e-10,0.,513.0,47.5,0.,0.09091,8.e-6,0.
'methyl ethyl ketone',1000.,0.,0.,0.
72.1,165.e-10,0.,536.8,41.5,0.,0.03704,8.e-6,0.
'methyl isobutyl ketone',1000.,0.,0.,0.
100.2,130.e-10,0.,571.0,32.3,0.,0.01724,8.e-6,0.
'1,1,2,2-tetrachloroethane',1000.,0.,0.,0.
167.9,2300.e-10,0.,661.2,57.6,0.,0.003846,8.e-6,0.
'chlorobenzene',1000.,0.,0.,0.
112.6,600.e-10,0.,632.4,44.6,0.,0.007692,8.e-6,0.
14000.,0.,0.,0.050,0.
14000.,0.,10900.,0.056,0.
12800.,150.,40000.,0.00005,1.4
0.,0.,15300.,0.,0.
25.,76.,185.e-7
c     30-gal drum w/ filter vent, 4 inner bags, 2 liner bags
c     Value for volume within innermost bags not required.
c     Void volume between bags: 10,900 cm3 (scaled from 55-gal drum value of 20,000 cm3)
c      Bag thickness same as Scenario 3
c      Void volume in 30-gal drum headspace = 15,300 cm3 (scaled from 55-gal drum value of 28,000 cm3)
c     No liner (estimated by Ad=150 cm2, xd=1.4 cm, xp=0.00005)
c     30-gal drum filter vent = 1.85e-5 mol/s/mol fr
c     VOC diff. char. estimated knowing D*H2, VOC Tc, VOC Pc
```

Output File for 30-Gallon Drum DAC Evaluation

30galdrum			
carbon tetrachloride	7	756.5144	814.9987
methanol	8	612.8073	663.1251
dichloromethane	5	762.1498	828.8836
toluene	3	904.2119	935.8895
trichloroethylene	3	878.6143	924.7414
butanol	5	809.4791	864.1644
chloroform	5	769.9742	842.9145
1,1-dichloroethene	**10**	**639.2377**	**696.2681**
methyl ethyl ketone	7	704.3638	778.6090
methyl isobutyl ketone	9	696.7892	764.4190
1,1,2,2-tetrachloroethane	1	950.9211	976.5667
chlorobenzene	3	887.4651	930.9960

Appendix D

WHY THE SHIELDED CONTAINER MODIFICATION IS NOT A CLASS 3 MODIFICATION

This page is intentionally left blank

WHY THE SHIELDED CONTAINER MODIFICATION IS NOT A CLASS 3 MODIFICATION

PART 1 REGULATORY ANALYSIS

In 1988 the Environmental Protection Agency (EPA) codified the process for modifying Resource Conservation and Recovery Act (RCRA) permits. The EPA established a tiered system that assured that modifications received a proper level of public involvement. The system consists of two fundamental parts: the process for modifying Permits based on the Classification of a modification; and the Classification process. This paper focuses on the classification of a modification.

In the Rulemaking, the EPA stated the following fundamental premise for the classification system"

> *As defined in revised § 270.42, Class 1 and 2 permittee-requested modifications do not substantially alter existing permit conditions or significantly affect the overall operation of the facility. Class 1 covers routine changes, such as changing typographical errors, upgrading plans and records maintained by the facility, or replacing equipment with functionally equivalent equipment. Class 2 modifications address common or frequently occurring changes needed to maintain a facility's capability to manage wastes safely or to conform with new regulatory requirements. Class 3 modifications cover major changes that substantially alter the facility or its operations.* (53 FR 37912-01, p. 37913).

There are no facility alterations being proposed by this modification and the changes are descriptive in nature mostly duplicating information relevant to containers already in the Permit.

The EPA's determination of how the various changes in Appendix I of 40 CFR 270.42 are to be classified clearly reflects this philosophy. The shielded container modification does not substantially alter the facility or its operations as is evident from the descriptions in the Overview and the limited number of changes in the Permit.

Also in the Rulemaking, the EPA allows the Permittee to elect to follow the procedures of a Class 2 modification for a Class 1 modification if the regulatory agency is notified.

> *Several commenters asked for a specified timeframe for Agency decisions for the Class 1 modifications that require prior approval. Therefore, in today's rule a new provision has been added at § 270.42(a)(3) that allows the permittee to elect to follow the Class 2 process instead of the Class 1 procedures. As discussed in the following section, the Class 2 process will assure that an Agency decision will be made on the modification request within established timeframes (generally 90 to 120 days). This approach will also result in additional public participation regarding the permittee's request. Furthermore, the deadlines in the Class 2 process balance the concerns of the Agency, the public, and the permittee, and are readily adaptable to the types of facility changes encompassed in Class 1.* (53 FR 37912-01, p. 37915)

The EPA realized that there would be times when a Permittee would seek a modification that is not included in Appendix I. They addressed this in the Rulemaking:

> *Although EPA has sought to provide a complete list of possible permit modifications and their classifications in Appendix I, there will undoubtedly be permit modification requests that are not included in Appendix I. Therefore, EPA today is establishing procedures that permittees can use under § 270.42(d) where a permittee wishing to make a permit modification not included in Appendix I can submit a Class 3 modification request, or alternatively ask the Agency for a determination that Class 1 or 2 modification procedures should apply. In making this determination, the Agency will consider the similarity of the requested modification to modifications listed in Appendix I, and will also apply the general definitions of Class 1, 2, and 3 modifications. It should be noted that EPA intends to monitor decisions by permitting authorities (both EPA Regional offices and authorized States) on modification request classifications and will periodically amend Appendix I of this regulation to include new classifications.* (53 FR 37912-01, p. 37919)

The plain meaning of this is that because the Shielded Container modification is covered by at least one entry in Appendix I of 40 CFR 270.42, then the classification is appropriate and correct. This is reinforced by the NMED's own ruling on August 30, 2001 when they stated:

> *5. If the Permittees decide to submit another modification request addressing additional containers, new uses for existing containers, and the impacts on facility storage capacity, they should provide sufficient information to determine whether the modification would be considered a Class 2 or a Class 3 modification. This determination would be based upon calculations demonstrating the percent increase in the facility's container storage capacity, considering the impact on both the Parking Area Unit and the WHB Unit."* (Letter from Gregory J Lewis to Dr. Ines Triay and Mr. John Lee, August 30, 2001)

The NMED supported this policy with a response to classify a modification to add a new container to the Permit in the following letter:

2. Class 2 modification: Add Waste Containers

This modification is related to several earlier permit modification requests (November 15, 1999, Item 4; July 20, 2000, Item2.d; April 27, 2001, Item 1) regarding additional waste containers that NMED previously rejected or denied (August 4, 2000; August 30, 2001). The current modification request seeks to allow the direct loading of ten drum overpacks (TDOPs), direct loaded 85-gallon drums, and 100-gallon drums in addition to the currently permitted containers for waste management at WIPP. In requesting a class determination, the Permittees cite 40 CFR §270.42 Appendix I, Item F.2.a (modification of a container unit without increasing the capacity of the unit) as the most analogous modification, which is considered a Class 2 modification according to the regulations.

NMED agrees, and has determined that this item [new containers] *is a Class 2 modification, subject to the permit modification requirements of 20 NMAC 4.1.900 (incorporating 40 CFR §270.42(b)).* (Letter from James Bearzi to Dr. Ines Triay and Mr. John Lee, July 22, 2002)

In conclusion, the Permittees have the following factors that indicate this is a Class 2 modification:

REGULATIONS: 40 CFR 270.42, Appendix I, Item F.3.b . covers the precise situation that the Permittees are proposing. In addition, the Permittees are making an "other change" to the Waste Analysis Plan (Item B.1.d.), also a Class 2.

GUIDANCE: The letters from the NMED of August 30, 2001 and July 22, 2002 clearly put this modification in Class 2 space.

PRECEDENT: New Mexico Environment Department (NMED) has approved the following modifications as Class 2 Permit Modifications:

- Direct loaded ten drum overpack (approved 11-25-2002) 40 CFR 270.42 Appendix I Item # F.a.2.
- Direct loaded 85-gallon drums (approved 11-25-2002) 40 CFR 270.42 Appendix I Item # F.a.2.
- Addition of 100-gallon drums (approved 11-25-2002) 40 CFR 270.42 Appendix I Item # F.a.2.
- Addition of a standard large box 2 (SLB2) (approved 4-15-2011) 40 CFR 270.42 Appendix I Item # F.a.2.
- Addition of a HalfPACT shipping package (approved 11-25-2002) based upon an August 30, 2001, NMED letter that indicates that the addition of waste management containers is not a "non-substantive" change and, therefore, should be processed as a Class 2 Permit Modification.
- Addition of a TRUPACT III shipping package (approved 4-15-2011) 40 CFR 270.42 Appendix I Item # F.a.2

PART 2 DISCUSSION OF STAKEHOLDER'S REQUESTS FOR CLASS 3

Some stakeholders have indicated that the modification should follow the procedures of a Class 3 due to substantial public interest because this PMR is related to RH TRU mixed waste and this makes it a complex modification. The EPA built in the option that the regulatory agency can elevate the modification to a Class 3 under certain specific conditions as follows:

> *At the same time, the safeguards built into today's rule will ensure that Class 2 modifications receive sufficient review and that risks are limited under automatic authorizations. These safeguards include: (1) Limitations on the types of modifications that can be made under Class 2 procedures, (2) the Agency's authority to reject Class 2 modification requests because the applications are incomplete, or to require that they undergo Class 3 procedures (a new requirement in this final rule), (3) the fact that the Agency has up to 300 days to revoke an automatic authorization, if human health or environmental concerns are identified, and (4) the requirement that activities under automatic authorizations comply with Part 265 requirements.*
>
> *As noted above, these safeguards include one significant new requirement, which EPA has included in response to commenters' concerns about the default provision. Section 270.42(b)(6) has been amended to allow the Director to determine that a Class 2 modification request should instead follow the Class 3 modification procedures. The Director may make this determination by the 90-day deadline (or 120-day deadline, if extended) required for Class 2 modifications, provided that there is significant public concern about the proposed modification or if he believes that the nature of the change warrants the more extensive procedures of Class 3. Therefore, if members of the public feel strongly that a Class 2 modification request should be subject to the Part 124*

> *approval procedures contained in Class 3, they can raise this issue with the Agency during the comment period and express the reasons why the Class 2 process is not appropriate in the particular case.* (53 FR 37912-01, p. 37917)

Substantial public interest simply because this is related to RH TRU mixed waste does not justify making this modification request a Class 3. The permitting process allowed significant public participation in the process of approving the WIPP Permit and modifying it to include RH TRU waste, consistent with the intent of the EPA and the New Mexico Hazardous Waste Act. However, the rules do not automatically parlay that substantial public interest into each modification that is requested. In fact, as seen above, the tiered modification system is established to promote acceptable levels of public participation in changes to the facility prior to making those changes. Furthermore, this change does not impact RH TRU mixed waste management since shielded containers will be managed as CH TRU mixed waste. The changes being proposed are few and simple. The proposed changes are fewer and much less complex than the TRUPACT-III changes that were recently adjudicated as a class 2 PMR. In fact, managing RH TRU waste as CH TRU waste greatly simplifies the handling process and allows it to be handled in a quarter of the time.