DRAFT 08-11-16

Class 3 Permit Modification Request

Addition of a Concrete Overpack Container Storage Unit

Waste Isolation Pilot Plant
Carlsbad, New Mexico

WIPP Permit Number - NM4890139088-TSDF

August 2016

Table of Contents

Transmittal Letter

Table of Contents i

Acronyms and Abbreviations ii

Overview of the Permit Modification Request 1

Regulatory Crosswalk 20

Appendix A Table of Changes A-1
Table of Changes A-2

Appendix B Proposed Revised Permit Text B-1

Appendix C Waste Isolation Pilot Plant Above Ground Storage Capability (AGSC) Design Drawings C-1

Appendix D Supplemental Information D-1

Acronyms and Abbreviations

AGSC	Above Ground Storage Capacity
ASTM	American Society of Testing and Materials
CFR	Code of Federal Regulations
CH	contact-handled
DOE	U.S. Department of Energy
DSA	Documented Safety Analysis
FHA	Fire Hazard Analysis
LFL	lower flammability limit
NPH	natural phenomenon hazards
NMAC	New Mexico Administrative Code
Overpack Unit	Concrete Overpack Container Storage Unit
Parking Area Unit	Parking Area Container Storage Unit
Permit	Waste Isolation Pilot Plant Hazardous Waste Facility Permit
Permittee	U.S. Department of Energy and Management and Operating Contractor
PMR	Permit Modification Request
PPA	Property Protection Area
RCRA	Resource Conservation and Recovery Act
RH	remote-handled
SWB	standard waste box
TDOP	ten-drum overpack
TRU	transuranic
TRUDOCK	TRUPACT-II Unloading Dock
TRUPACT	Transuranic Package Transporter
TRUPACT-II	Transuranic Package Transporter-II
TSDF-WAC	Treatment, Storage and Disposal Facility Waste Acceptance Criteria
WHB	Waste Handling Building
WHB Unit	Waste Handling Building Container Storage Unit
WIPP	Waste Isolation Pilot Plant

Overview of the Permit Modification Request

This document contains a Class 3 Permit Modification Request (**PMR**) for the Waste Isolation Pilot Plant (**WIPP**) Hazardous Waste Facility Permit (**Permit**) Number NM4890139088-TSDF.

This PMR is being submitted by the U.S. Department of Energy (**DOE**) and Nuclear Waste Partnership LLC, collectively referred to as the Permittees, in accordance with the Permit Part 1, Section 1.3.1 (20.4.1.900 New Mexico Administrative Code (**NMAC**) incorporating Title 40 Code of Federal Regulations (**CFR**) §270.42[c]). The modification proposes the following changes:

- Provides the Permittees the ability to store additional contact-handled (**CH**) transuranic (**TRU**) mixed waste (65,280 cubic feet) on the surface of the WIPP facility in a permitted hazardous waste container storage unit during times when the facility is undergoing a maintenance activity or during an event that delays waste emplacement. This additional CH TRU mixed waste storage capacity includes remote-handled (**RH**) waste in shielded containers that is managed and stored as CH waste pursuant to Permit Part 3, Section 3.3.1.8.

- Provides the Permittees the ability to store CH TRU mixed waste (65,280 cubic feet) in a permitted hazardous waste container storage unit for up to one year. The one year storage time only applies to the proposed new Concrete Overpack Container Storage Unit (**Overpack Unit**). The current storage times for the Waste Handling Building Container Storage Unit (**WHB Unit**) and the Parking Area Container Storage Unit (**Parking Area Unit**) will remain unchanged.

The Permittees are proposing changes to the following Permit Parts and Attachments:

- Revise Part 3, Container Storage, Section 3.1., Designated Container Storage Units

- Revise Part 3, Container Storage, Section 3.1.1., Waste Handling Building Container Storage Unit, Table 3.1.1 – WHB Unit

- Revise Part 3, Container Storage, Section 3.1.1.5., Storage on Pallets

- Revise Part 3, Container Storage, Section 3.1.1.8., Minimum Aisle Space

- Revise Part 3, Container Storage, Section 3.1., Designated Container Storage Units to add new Section 3.1.3., Concrete Overpack Container Storage Unit

- Revise Part 3, Container Storage, Section 3.6., Containment Systems

- Revise Part 3, Container Storage, Section 3.7., Inspection Schedules and Procedures

- Revise Part 3, Container Storage, Section 3.7., Inspection Schedules and Procedures to add new Section 3.7.3., Inspection of Closed Concrete Overpacks

- Revise Part 6, Closure Requirements, Section 6.9., Closure of Permitted Container Storage Units

- Revise Attachment A, General Facility Description and Process Information, A-3, Property Description

- Revise Attachment A, General Facility Description and Process Information, A-4, Facility Type

- Revise Attachment A1, Container Storage, Introduction

- Revise Attachment A1, Container Storage, A1-1c, Description of the Container Storage Units to add new Section A1-1c(3), Concrete Overpack Container Storage Unit (Overpack Unit) to describe the new concrete overpack container storage unit

- Revise Attachment A1, Container Storage, A1-1d, Container Management Practices

- Revise Attachment A1, Container Storage, A1-1d(4), Handling Waste in Shielded Containers

- Revise Attachment A1, Container Storage, A1-1e(2), Parking Area Unit

- Revise Attachment A1, Container Storage, A1-1e, Inspections to add new Section A1-1e(3), Overpack Unit to delineate the inspection requirements for the new concrete overpack container storage unit

- Revise Attachment A1, Container Storage, A1-1f(2), Secondary Containment Description

- Revise Attachment A1, Container Storage, A1-1i, Control of Run On

- Revise Attachment A1, Container Storage, Table A1-2, Waste Handling Equipment Capacities

- Revise Attachment A1, Container Storage, Figures to add two figure drawings: A1-38 for the concrete overpack unit area and A1-39 for the concrete overpack container)

- Revise Attachment A2, Geologic Repository, A2-2b, Geologic Repository Process Description, CH TRU Mixed Waste Emplacement

- Revise Attachment A2, Geologic Repository, Table A2-1, CH TRU Mixed Waste Handling Equipment Capacities

- Revise Attachment A2, Geologic Repository, Figure A2-12, WIPP Facility Surface and Underground CH Transuranic Mixed Waste Process Flow Diagram

- Revise Attachment A4, Traffic Patterns, to add new Section A4-5, Concrete Overpack Container Storage Unit Traffic

- Revise Attachment A4, Traffic Patterns, Figures add two new figures, Figure A4-8 and Figure A4-9 to show traffic patterns for the new concrete overpack container storage unit)

- Revise Attachment B, Hazardous Waste Permit Application Part A

- Revise Attachment B, Hazardous Waste Permit Application Part A, Appendix B2 Maps to replace Figure B2-2 with a more legible figure and Figure B2-2a Note 1 is being revised to change the Property Protection Area (**PPA**) from approximately 35 acres to approximately 40 acres.

- Revise Attachment B, Hazardous Waste Permit Application Part A, Appendix B3 Facilities to add Figure B3-5 to show the Concrete Overpack Container Storage Unit

- Revise Attachment D, RCRA Contingency Plan, D-1e, Description of Surface Hazardous Waste Management Units

- Revise Attachment D, RCRA Contingency Plan, D-1f, Off-Normal Events to delete section

- Revise Attachment E, Inspection Schedule, Process and Forms, E-1b(1), Container Inspection

- Revise Attachment E, Inspection Schedule, Process and Forms, Table E-1 (Continued), Inspection Schedule/Procedures Notes

- Revise Attachment G, Closure Plan, Introduction

- Revise Attachment G, Closure Plan, G-1, Closure Plan

- Revise Attachment G, Closure Plan, G-1a(1), Container Storage Units

- Revise Attachment G, Closure Plan, G-1b, Requirements

- Revise Attachment G, Closure Plan, G-1c, Maximum Waste Inventory

- Revise Attachment G, Closure Plan, G-1e(2)(b), Decontamination Activities, Surface Container Storage Units

- Revise Attachment G, Closure Plan, Table G-2, Anticipated Overall Schedule for Closure Activities

- Revise Attachment J, Hazardous Waste Management Unit Tables, to add new Table J-3 for the new concrete overpack container storage unit

These changes do not reduce the ability of the Permittees to provide continued protection to human health and the environment.

The requested modification to the Permit and related supporting documents are provided in this PMR. The proposed modification to the text of the Permit has been identified using red text and a double underline and a ~~strikeout~~ font for deleted information. All direct quotes are indicated by italicized text. The following information specifically addresses how compliance has been achieved with the Permit Part 1, Section 1.3.1, for submission of this Class 3 PMR.

1. 20.4.1.900 NMAC, incorporating 40 CFR §270.42(c)(1)(i), requires the applicant to describe the exact change to be made to the permit conditions and supporting documents referenced by the permit.

The proposed action is to permit an additional hazardous waste container storage unit at the WIPP facility for storage of 65,280 cubic feet of TRU mixed waste for up to one year prior to disposal. This additional CH TRU mixed waste storage capacity includes RH waste in shielded containers that is managed and stored as CH waste pursuant to Permit Part 3, Section 3.3.1.8.

The new Above Ground Storage Capacity (**AGSC**) project will add capacity to the WIPP facility to store TRU mixed waste on the surface prior to disposal in the underground. Storage will be accomplished using concrete overpacks placed on an outdoor concrete storage area. This new hazardous waste container storage unit provides the Permittees the ability to safely store additional CH TRU mixed waste on the surface of the WIPP facility in a permitted hazardous waste container storage unit during times when the facility is undergoing a planned or unplanned maintenance activity, an event that delays waste emplacement, or an event that delays shipments to the WIPP (e.g., inclement weather). For example, this change will allow the Permittees to continue processing waste when inclement weather delays shipments to the WIPP (such as snowfall in northern New Mexico). In these situations the Permittees will have the ability to process the waste that will be in storage in the new storage unit. This is a significant waste processing efficiency. The current Permit requires shipments of waste from the generator sites to be stopped in any event which results in an interruption to normal waste handling operations that exceeds three days. This use of the concrete overpacks/concrete overpack storage unit will eliminate the need for this stoppage and allow generator storage sites to continue shipments.

Upon completion of the AGSC project, the Permittees will have the capability and space to store up to eight weeks of CH TRU mixed waste shipments at a rate of 17 shipments per week.

According to 20.4.1.900 NMAC, incorporating 40 CFR §270.15, Specific part B information requirements for containers, owners or operators of facilities that store containers of hazardous waste must provide a description of the containment system to demonstrate compliance with 20.4.1.500 NMAC, incorporating 40 CFR §264.175, showing at least the following information:

- Basic design parameters, dimensions, and materials of construction,
- How the design promotes drainage or how containers are kept from contact with standing liquids in the containment system,
- Capacity of the containment system relative to the number and volume of containers to be stored,
- Provisions for preventing or managing run-on, and
- How accumulated liquids can be analyzed and removed to prevent overflow.

The following paragraphs and Table 1 below address specific requirements from 20.4.1.900 NMAC, incorporating 40 CFR §270.15.

The concrete Overpack Unit is sized to store up to 408 concrete overpacks. Each concrete overpack is sized to hold either 14 55-gallon drums (2 7-packs), 2 standard waste boxes

(**SWBs**), or 1 ten-drum overpack (**TDOP**). This provides capacity to store up to 8 weeks of shipments at 17 shipments per week of three Transuranic Package Transporter-II (**TRUPACT-II**) containers per shipment. The concrete overpacks are of robust design. They are made of steel reinforced concrete with a removable concrete lid. They are designed to function as the secondary containment barrier when loaded with TRU mixed waste. Aisles between the concrete overpacks provide area access and egress paths and shall be a minimum of 48 inches. The nominal dimensions of the Overpack Unit cement pad and berm are shown below:

- Length: 712 feet
- Width: 135.5 feet
- Slab thickness: 14 inches minimum
- Berm height: 8 inches
- Berm width: 12 inches

The concrete overpack is constructed of 4,000-pounds per square inch concrete and it has two layers of #3 rebar spaced at 6 inches between bars. The nominal wall thickness of the overpack is 8 inches and the nominal base and lid thickness is 6 inches. The concrete overpack has a nominal interior diameter of 80 inches and an interior height of 78 inches. The concrete overpack has a nominal exterior diameter of 96 inches (8 feet) and a nominal exterior height of 90 inches (7.5 feet) without the lid in place. The empty concrete overpack weighs approximately 27,000 pounds. The lid weighs approximately 5,100 pounds and is designed to seat securely in an overlap joint atop the concrete overpack body. This lid design prevents rainwater from entering the concrete overpack, therefore covers and/or enclosures are not required. The total weight of the concrete overpack with lid is approximately 32,100 pounds. The concrete overpacks are procured to the applicable American Concrete Institute standard for reinforced concrete. The nominal dimension and approximate weight of the concrete overpack are shown below:

- Wall thickness: 8 inches
- Base and lid thickness: 6 inches
- Interior diameter: 80 inches (6.7 feet)
- Interior height: 78 inches (6.5 feet)
- Exterior diameter: 96 inches (8 feet)
- Exterior height: 90 inches (7.5 feet)
- Empty weight: 27,000 pounds
- Lid weight: 5,100 pounds
- Total weight: 32,100 pounds

Similar to waste being stored in Type B packaging (Permit Attachment A, Section A1-1e(2)), inspection of waste containers is not possible when the containers are in concrete overpacks. Inspections can be accomplished by bringing the concrete overpacks into the WHB Unit and opening them and lifting the waste containers out for inspection when they are ready to be removed for emplacement underground. Removing containers strictly for the purposes of inspection results in unnecessary worker radiological exposures and subjects the waste to additional handling. The waste containers do not need to be inspected until they are ready to be removed from the concrete overpacks for emplacement underground. Because the concrete overpacks are closed and are of robust design, waste containers are protected from standing liquids that may be present due to rain water. In addition, the design of the concrete overpack prevents the migration of hazardous waste to the environment.

The Overpack Unit, approximately 96,500 square feet, will be constructed to the south of the Waste Handling Building (**WHB**) with the majority of work performed outside the existing PPA fence. Prior to use for storing TRU mixed waste in the Overpack Unit, the PPA fence will be re-routed to include the unit. It will be surrounded by a permanent 7 foot high chain link fence, topped by three strands of barbed wire, for a total of 8 feet in height. The regularly inspected chain link fencing at the WIPP facility will completely surround the Overpack Unit. The additional area needed for the Overpack Unit will result in an increase to the PPA of approximately 5.3 acres. Changes are being proposed to Permit Attachment A, Sections A-3 and A-4 and Permit Attachment B, Hazardous Waste Permit Application for Part A, to reflect the proposed Overpack Unit. The changes to Section A-3 will revise the area of the PPA from 34.16 acres to approximately 40 acres and Section A-4 will briefly describe the Overpack Unit and location. The changes to Part A include the following:

- 7. Process-Codes and Design Capacities is being revised to add a third storage unit with respective Process Code S01, its respective storage volume, and to add 50 concrete overpacks to the storage unit

- Figure B2-2 is being replaced with a more legible figure and Note 1 is being revised to change the PPA from approximately 35 acres to approximately 40 acres

- New Figure B3-5 is being added to depict the Concrete Overpack Container Storage Unit

These changes are depicted in the redline strikeout of this PMR. Note that revised pages to Form OMB#: 2050-0024 (RCRA Hazardous Waste Part A Application forms) are not included. These will be provided once the Permit modification is adjudicated as a Class 1 Permit Modification Notification.

The Overpack Unit is a steel reinforced concrete pad that is engineered to contain and collect any liquid spills from waste handling operations. Floor drains and curbs will direct liquids to a collection tank for sampling, as needed based on inspection of the Overpack Unit, if the liquids are contaminated. The liquid collection system for the Overpack Unit consists of steel pipe leading from the unit low point (i.e., sump drain) to a sump. The sump is constructed of metal or concrete. The disposition of liquids collected in the sump is administratively controlled. During rain periods, the rainwater could be diverted to existing on-site holding ponds. A provision shall be made to bypass rainwater from the sample tank directly to the site settling pond when there is no overpack transport or handling activity on the Overpack Unit slab. A fire water line shall be provided to feed approximately 500 gallons per minute of water to a fire hydrant. The Overpack Unit will be configured to provide safe driving paths for forklifts handling overpacks.

The safety strategy for the AGSC is based on the WIPP Documented Safety Analysis (**DSA**), (Revision 5b), and applicable analyses and design requirements performed and implemented at the Savannah River Site Solid Waste Management Facilities. The concrete overpacks and the Overpack Unit represent a robust design that is based on the physical and functional description below. The calculations and analysis found in Appendix D, Supplemental Information, of this PMR use radiological information to bound the design basis accidents. Therefore, if the radiological release criteria are met by the design, then the hazardous release criteria will also be bounded by the design.

To support the hazard and accident analysis, certain concrete overpack attributes are necessary to ensure that the concrete overpack performs its intended safety significant functions. These overpack attributes are associated with hazards involving impacts, fire, and explosion. The safety functions performed by closed concrete overpacks are:

- The overpacks will provide a secondary confinement for waste and protect the primary waste packages from operational (vehicle crashes, drops), natural phenomena (high winds/tornadoes), and external hazards (lightning protection and radiation shielding).

- Does not contribute to the facility fire loading, and protect containers inside from external fires because they are made of noncombustible material.

- Provides a thermal barrier to protect internal containers from an external fire and prevents the spread of fire within concrete overpacks.

- Does not fail due to internal fires.

- Provides confinement during various events where the concrete overpack limits the release of radiological inventory.

- Provides a substantial mass to prevent tipping over or sliding during design basis tornado/high wind events.

- Does not fail or suffer lid loss due to differential pressures caused by design basis tornadoes or high winds.

- Prevents tipping over during a design basis seismic event.

- Provides sufficient permeability to prevent the accumulation of flammable gases such as hydrogen above applicable limits inside the overpack and accumulations of any other filtered releases from the primary confinements (waste containers).

- Absorbs the energy of an internal explosion or releases the energy by vertical displacement of the drum lid, with no damage to adjacent containers. The most likely missile generated by an internal explosion is an ejected drum lid, which will not penetrate the concrete overpack.

- Resists impacts during natural phenomenon hazard (**NPH**) events such that a collapse of light and moderate structures or falling structural objects (e.g., light fixtures, cable trays, or conduits) and the collapse of substantial structures have limited impact on the inventory inside the concrete overpack.

The AGSC will be incorporated into the WIPP hazard analysis and the DSA. The functional classification for AGSC components has been established using DOE Standard DOE-STD-3009-2014, Preparation Guide for U.S. Department of Energy Nonreactor Nuclear Facility Documented Safety Analyses. The safety design criteria to be applied to the AGSC aligns with DOE Order 420.1C, Facility Safety and DOE Guide 420.1-1A, Nonreactor Nuclear Safety Design Guide. The concrete overpacks will need to perform the Safety Significant or Safety Class functions credited to Transuranic Package Transporters (**TRUPACTs**) and the WHB in protecting TRU waste packages from NPH and man-made external events. In doing so, the design and associated safety related calculations are similar to those employed at the Savannah River Site Solid Waste Management Facility. Specific Safety Significant functions of the concrete overpacks are discussed below.

The DOE's Fire Protection Standard, DOE-STD-1066-2012, defines the Fire Hazards Analysis (**FHA**) as follows: "The purpose of a Fire Hazard Analysis (FHA) is to conduct a comprehensive assessment of the risk from fire in a facility to verify that fire safety objectives are met. The FHA may also incorporate facilities, other than buildings when they are exposed or are integral to the building operations. The FHA usually is broken down by building, but may be further broken down into fire areas. The FHA is also a tool for incorporating appropriate fire protection criteria into designs in accordance with DOE-STD-1189-2008, and for demonstrating compliance with DOE orders and standards, building codes requirements, and fire protection standards. A FHA may also be required for facilities other than buildings if the value and hazard warrant."

The Permittees maintain a FHA for the entire WIPP facility which includes buildings and systems, both surface and underground. However, it is based on the current WIPP TRU handling and storage methods and not on above ground storage outdoors. This PMR addresses the new capability for above ground storage of TRU mixed waste at the WIPP facility.

Key features and attributes of the new Overpack Unit include:

- The concrete overpack will serve dual functions as a fire barrier for external fire events, and prevent the buildup of flammable gasses above applicable limits.
- The Overpack Unit concrete pad for TRU mixed waste loaded overpacks will have a floor that allows for the collection of a potential spill in the sampling tank.
- A fire water supply line with hydrant is provided in the Overpack Unit.
- Access space will be provided between stored concrete overpacks to allow access for personnel performing inspections and by Fire Department personnel as needed.
- In accordance with the FHA, 20 feet minimum cleared area will be maintained around the storage area to protect from wild fires.
- Concrete overpacks will be manufactured with pockets for forklift tines eliminating the need for pallets on the above ground storage pad.

Construction and operation of the Overpack Unit will not introduce new hazardous materials to the WIPP facility nor increase the final disposal volume of the WIPP facility. It will increase the inventory of hazardous waste allowed in storage above ground at the WIPP facility at any one time. Potential impacts of the increased above ground inventory will be mitigated by the use of concrete overpacks to provide secondary containment and protect the waste packages from

NPHs, fire, and physical insult. By extension, the Overpack Unit will not change the hazards or consequences that a worker or the public might be exposed to. The Overpack Unit does not introduce any new chemical hazards. However, the Overpack Unit will increase the inventory of radionuclides in above ground storage at the WIPP facility and a revision to the DSA is anticipated.

The WIPP facility does not lie within an area listed in Appendix VI of 20.4.1.500 NMAC (incorporating 40 CFR 264 Appendix VI) and does not have to comply with the seismic standard.

The primary containment for TRU mixed waste during transport to the WIPP facility, and while the waste is being handled at the WIPP facility prior to emplacement, is the waste container. Secondary containment is provided by a Type B shipping container (e.g., TRUPACT-II) during movement to the WIPP facility and while at the WIPP facility prior to being unloaded in the WHB (limited to 60 days after sealing a Type B shipping container). Secondary containment at the CH Bay Storage Area inside the WHB Unit is provided by the WHB Unit floor (See Permit Attachment A, Section A1-1f). The concrete overpack provides secondary containment when waste is stored in the Overpack Unit and in transit between the WHB and the Overpack Unit.

The fire protection strategy ensures a closed concrete overpack will provide a thermal barrier to protect stored waste packages from credible fires. The strategy will prevent fires inside a concrete overpack from propagating beyond the concrete overpack. Analyses performed at Savannah River Site have demonstrated that concrete overpacks similar to those to be used for the Overpack Unit, will provide a 3-hour barrier for anticipated fire events. Similar analyses and calculations indicate the concrete overpack design to be used for the Overpack Unit will provide adequate protection from credible fires.

The likelihood and severity of fires affecting Overpack Unit concrete overpacks is minimized through design features and operational restrictions. Concrete overpacks will be manufactured with pockets for forklift tines eliminating the need for pallets on the above ground storage pad. The storage pad will be constructed with sloped floors leading to drains and a collection tank to minimize the possibility that combustible liquids (for example, forklift diesel fuel) could collect and support a large pool fire. Existing WIPP facility fire protection program requirements minimize the presence of other combustibles in the Overpack Unit. The WIPP facility fire water supply system will be extended to the Overpack Unit and a new fire hydrant adjacent to the Overpack Unit will be installed.

The TRU mixed waste storage process begins with the WIPP Operations transporting an empty concrete overpack into the WHB using a forklift and positioning it in front of the TRUPACT-II Unloading Dock (**TRUDOCK**). Next, Operations will remove the empty overpack lid and set it aside on the designated stand. TRU mixed waste containers are removed from the CH packaging on the TRUDOCK. As the waste is removed from the CH packaging, the payload containers will be inspected, restarting the annual inspection requirement. The waste will be lowered into the empty overpack using the Adjustable Center of Gravity Lift Fixture. The lid is then placed back on the overpack. This provides the secondary containment for the TRU mixed waste. Using a forklift, Operations will then transport the loaded overpack containing the TRU mixed waste outside of the airlocks. An all-terrain forklift will then transport the loaded concrete overpack onto the storage pad (Overpack Unit).

When it is time to emplace the TRU mixed waste into the WIPP underground, Operations will retrieve the loaded concrete overpack containing the TRU mixed waste from the outdoor

concrete storage area (Overpack Unit) and move it using the all-terrain forklift outside the WHB. The overpack is then carried into the WHB using the electric forklift and placed on the TRUDOCK. The overpack lid is removed and radiological surveys are performed as required. The TRU mixed waste is removed from the overpack, inspected for spills or leaks, and, if found to be in good condition, placed on a facility pallet and readied for emplacement in the WIPP underground. The empty overpack is then ready to receive other TRU mixed waste for temporary storage or it can be moved out of the WHB and staged for future use.

Table 1 below provides a hazardous waste regulatory framework compliance summary for the proposed concrete Overpack Unit. This table also provides additional description of the changes being proposed.

Regulatory Framework for Hazardous Waste Containers & Hazardous Waste Container Storage Units						
Regulatory Citation(s) 20.4.1.900 NMAC (incorporating 40 CFR Part 270)	Regulatory Citation(s) 20.4.1.500 NMAC (incorporating 40 CFR Part 264)	Description of Requirement	Above Ground Surface Storage Unit (Overpack Unit) Compliance			
			Yes	No	N/A	Comments

Regulatory Framework for Hazardous Waste Containers & Hazardous Waste Container Storage Units						
Regulatory Citation(s) 20.4.1.900 NMAC (incorporating 40 CFR Part 270)	**Regulatory Citation(s) 20.4.1.500 NMAC (incorporating 40 CFR Part 264)**	**Description of Requirement**	**Above Ground Surface Storage Unit (Overpack Unit) Compliance**			
			Yes	**No**	**N/A**	**Comments**
§270.15(a)(1)		*Basic design parameters, dimensions, and materials of construction.*	✓			The nominal dimensions of the Overpack Unit cement pad and berm are shown below: • Length: 712 feet • Width: 135.5 feet • Slab thickness: 14 inches minimum • Berm height: 8 inches • Berm width: 12 inches The concrete overpack is constructed of 4,000-pounds per square inch concrete and it has two layers of #3 rebar spaced at 6 inches between bars. The nominal wall thickness of the overpack is 8 inches and the nominal base and lid thickness is 6 inches. The overpack has a nominal interior diameter of 80 inches and an interior height of 78 inches. The empty overpack weighs approximately 27,000 pounds. The lid weighs approximately 5,100 pounds and is designed to seat securely in an overlap joint atop the overpack body. The total weight of the concrete overpack with lid is approximately 32,100 pounds. The overpacks are procured to the applicable American Concrete Institute standards for reinforced concrete. The nominal dimensions and approximate weight of the concrete overpack are shown below: • Wall thickness: 8 inches • Base and lid thickness: 6 inches • Interior diameter: 80 inches (6.7 feet) • Interior height: 78 inches (6.5 feet) • Exterior diameter: 96 inches (8 feet) • Exterior height: 90 inches (7.5 feet) • Empty weight: 27,000 pounds • Lid weight: 5,100 pounds • Total weight: 32,100 pounds

Regulatory Framework for Hazardous Waste Containers & Hazardous Waste Container Storage Units						
Regulatory Citation(s) 20.4.1.900 NMAC (incorporating 40 CFR Part 270)	**Regulatory Citation(s) 20.4.1.500 NMAC (incorporating 40 CFR Part 264)**	**Description of Requirement**	**Above Ground Surface Storage Unit (Overpack Unit) Compliance**			
			Yes	**No**	**N/A**	**Comments**
§270.15(a)(2)		*How the design promotes drainage or how containers are kept from contact with standing liquids in the containment system.*	✓			The storage area is a steel reinforced concrete pad that is engineered to contain and collect any liquid spills from waste handling operations. Floor drains and curbs will direct liquids to a collection tank for sampling. The liquid collection system for the overpack unit consists of steel pipe leading from the unit low point (i.e., sump drain) to a sump. The sump is constructed of metal or concrete. The disposition of liquids collected in the sump is administratively controlled. The waste containers are stored on the concrete pad within the concrete overpacks; therefore, they are kept from contact with standing liquids in the containment system.
§270.15(a)(3)		*Capacity of the containment system relative to the number and volume of containers to be stored.*	✓			The concrete pad/berm storage area is approximately 96,490 square feet made up of reinforced concrete to store up to 408 concrete overpacks. It is designed to hold 65,280 cubic feet of TRU mixed waste.
§270.15(a)(4)		*Provisions for preventing or managing run-on.*	✓			The storage area is a steel reinforced concrete pad with a berm that will prevent run-on and is engineered to contain and collect any liquid spills from waste handling operations. Floor drains and curbs will direct liquids to a collection tank for sampling. The liquid collection system for the overpack unit consists of steel pipe leading from the unit low point (i.e., sump drain) to a sump. The sump is constructed of metal or concrete. The disposition of liquids collected in the sump is administratively controlled using WIPP standard operating procedures.

Regulatory Framework for Hazardous Waste Containers & Hazardous Waste Container Storage Units						
Regulatory Citation(s) 20.4.1.900 NMAC (incorporating 40 CFR Part 270)	**Regulatory Citation(s) 20.4.1.500 NMAC (incorporating 40 CFR Part 264)**	**Description of Requirement**	**Above Ground Surface Storage Unit (Overpack Unit) Compliance**			
			Yes	**No**	**N/A**	**Comments**
§270.15(a)(5)		*How accumulated liquids can be analyzed and removed to prevent overflow.*	✓			The storage area is a steel reinforced concrete pad that is engineered to contain and collect any liquid spills from waste handling operations. Floor drains and curbs will direct liquids to a collection tank for sampling, as needed based on inspection of the Overpack Unit, if the liquids are contaminated. The liquid collection system for the overpack unit consists of steel pipe leading from the unit low point (i.e., sump drain) to a sump. The sump is constructed of metal or concrete. The disposition of liquids collected in the sump is administratively controlled using WIPP Standard Operating Procedures.
§270.15(b)(1)		*Test procedures and results or other documentation or information show that the wastes do not contain free liquids; and*	✓			Real Time Radiography and Visual Examination is a current practice that is proceduralized to document that the wastes do not contain prohibited quantities of free liquids.
§270.15(b)(2)		*A description of how the storage area is designed or operated to drain and remove liquids or how the containers are kept from contact with standing liquids.*	✓			The storage area is a steel reinforced concrete pad that is engineered to contain and collect any liquid spills from waste handling operations. Floor drains and curbs will direct liquids to a collection tank for sampling. The liquid collection system for the overpack unit consists of steel pipe leading from the unit low point (i.e., sump drain) to a sump. The sump is constructed of metal or concrete. The disposition of liquids collected in the sump is administratively controlled using WIPP standard operating procedures. The containers are within the concrete overpacks; therefore, they are kept from contact with standing liquids that may be present due to rainfall in the concrete/berm containment system.
§270.15(c)		*Sketches, drawings, or data demonstrating compliance with §264.176 (location of buffer zone and containers holding ignitable or reactive wastes) and §264.177(c) (location of incompatible wastes), where applicable.*	✓			DOE/WIPP-02-3122, Transuranic Waste Acceptance Criteria for The Waste Isolation Pilot Plant, does not allow ignitable or reactive waste to be shipped to the WIPP facility.
	§264.176	*Containers holding ignitable or reactive waste must be located at least 15 meters (50 feet) from the facility's property line.*			✓	DOE/WIPP-02-3122, Transuranic Waste Acceptance Criteria for The Waste Isolation Pilot Plant, does not allow ignitable or reactive waste to be shipped to the WIPP facility.

Regulatory Framework for Hazardous Waste Containers & Hazardous Waste Container Storage Units						
Regulatory Citation(s) 20.4.1.900 NMAC (incorporating 40 CFR Part 270)	**Regulatory Citation(s) 20.4.1.500 NMAC (incorporating 40 CFR Part 264)**	**Description of Requirement**	**Above Ground Surface Storage Unit (Overpack Unit) Compliance**			
			Yes	**No**	**N/A**	**Comments**
	§264.177(c)	*A storage container holding hazardous waste that is incompatible with any waste or other materials stored nearby in other containers, piles, open tanks, or surface impoundments must be separated from the other materials or protected from them by means of a dike, berm, wall, or other device.*			✓	DOE/WIPP-02-3122, Transuranic Waste Acceptance Criteria for The Waste Isolation Pilot Plant, does not allow ignitable or reactive waste to be shipped to the WIPP facility. The waste containers are stored within the concrete overpacks, which are designed to hold up to 1 TDOP, 2 SWBs, or 14 55-gallon drums. The overpacks are procured to the applicable American Society for Testing and Materials (**ASTM**) standards for pre-cast reinforced concrete manhole sections (ASTM C478-93), and reinforced concrete wall (ASTM C76-89).
§270.15(d)		*Where incompatible wastes are stored or otherwise managed in containers, a description of the procedures used to ensure compliance with §§264.177 (a) and (b), and §264.17(b) and (c).*	✓			Acceptable Knowledge procedures used ensure that radiography and visual examination include a list of prohibited items that the operator shall verify are not present in each container (e.g., liquid exceeding Treatment, Storage and Disposal Facility Waste Acceptance Criteria (**TSDF-WAC**) limits, corrosive, ignitable, reactive, and incompatible wastes).
§270.15(e)		*Information on air emission control equipment as required in §270.27.*			✓	Air emission control equipment is not required. This is because the Subpart CC – Air Emissions Standards for Tanks, Surface Impoundments, and Containers does not apply to "*A waste management unit that is used solely for the management of radioactive mixed waste in accordance with applicable regulations under the authority of the Atomic Energy Act and Nuclear Waste Policy Act*" pursuant to 264.1080(b)(6). Furthermore, air emission control equipment is not required because the waste containers are stored within the concrete overpacks. The concrete overpack design allows venting of flammable gasses such as hydrogen through permeation to maintain concentration below applicable limits (e.g., the Lower Flammability Limit (**LFL**) for hydrogen is 4% concentration).

Regulatory Framework for Hazardous Waste Containers & Hazardous Waste Container Storage Units						
Regulatory Citation(s) 20.4.1.900 NMAC (incorporating 40 CFR Part 270)	**Regulatory Citation(s) 20.4.1.500 NMAC (incorporating 40 CFR Part 264)**	**Description of Requirement**	**Above Ground Surface Storage Unit (Overpack Unit) Compliance**			
			Yes	**No**	**N/A**	**Comments**
	§264.175(a)	*Container storage areas must have a containment system that is designed and operated in accordance with paragraph (b) of this section, except as otherwise provided by paragraph (c) of this section.*	✓			The storage area is a steel reinforced concrete pad that is engineered to contain and collect any liquid spills from waste handling operations. Floor drains and curbs will direct liquids to a collection tank for sampling. The liquid collection system for the overpack unit consists of steel pipe leading from the unit low point (i.e., sump drain) to a sump. The sump is constructed of metal or concrete. The disposition of liquids collected in the sump is administratively controlled. The containers are within the concrete overpacks; therefore, they are kept from contact with standing liquids in the containment system.
	§264.175(b)(1)	*A base must underline the containers which is free of cracks or gaps and is sufficiently impervious to contain leaks, spills, and accumulated precipitation until the collected material is detected and removed;*	✓			The storage area is a steel reinforced concrete pad that is engineered to contain and collect any liquid spills from waste handling operations. Floor drains and curbs will direct liquids to a collection tank for sampling. The liquid collection system for the overpack unit consists of steel pipe leading from the unit low point (i.e., sump drain) to a sump. The sump is constructed of metal or concrete. The disposition of liquids collected in the sump is administratively controlled. The containers are within the concrete overpacks; therefore, they are kept from contact with standing liquids in the containment system.
	§264.175(b)(2)	*The base must be sloped or the containment system must be otherwise designed and operated to drain and remove liquids resulting from leaks, spills, or precipitation, unless the containers are elevated or otherwise protected from contact with accumulated liquids;*	✓			The storage area is a steel reinforced concrete pad that is sloped and engineered to contain and collect any liquid spills from waste handling operations. Floor drains and curbs will direct liquids to a collection tank for sampling. The liquid collection system for the overpack unit consists of steel pipe leading from the unit low point (i.e., sump drain) to a sump. The sump is constructed of metal or concrete. The disposition of liquids collected in the sump is administratively controlled. The containers are within the concrete overpacks; therefore, they are kept from contact with standing liquids in the containment system.

Regulatory Framework for Hazardous Waste Containers & Hazardous Waste Container Storage Units						
Regulatory Citation(s) 20.4.1.900 NMAC (incorporating 40 CFR Part 270)	**Regulatory Citation(s) 20.4.1.500 NMAC (incorporating 40 CFR Part 264)**	**Description of Requirement**	**Above Ground Surface Storage Unit (Overpack Unit) Compliance**			
			Yes	**No**	**N/A**	**Comments**
	§264.175(b)(3)	*The containment system must have sufficient capacity to contain 10% of the volume of containers or the volume of the largest container, whichever is greater. Containers that do not contain free liquids need not be considered in this determination;*			✓	Liquid waste is not acceptable at the WIPP facility. No containers will have more than 1% observable liquid. The storage area is a steel reinforced concrete pad with an 8 inch berm that is engineered to prevent run-on and to contain and collect any liquid spills from waste handling operations. The concrete pad is raised above the surrounding surface. Floor drains and curbs will direct liquids to a collection tank for sampling. The liquid collection system for the overpack unit consists of steel pipe leading from the unit low point (i.e., sump drain) to a sump. The sump is constructed of metal or concrete. The disposition of liquids collected in the sump is administratively controlled. The containers are within the concrete overpacks; therefore, they are kept from contact with standing liquids in the containment system.
	§264.175(b)(4)	*Run-on into the containment system must be prevented unless the collection system has sufficient excess capacity in addition to that required in paragraph (b)(3) of this section to contain any run-on which might enter the system; and*	✓			The storage area is a steel reinforced concrete pad with a berm that will prevent run-on. The nominal dimensions of the berm are 8 inches high and 12 inches wide. Furthermore, the waste containers are within the concrete overpacks; therefore, they are kept from contact with run-on that may overtop the concrete berm and standing liquids in the containment system.
	§264.175(b)(5)	*Spilled or leaked waste and accumulated precipitation must be removed from the sump or collection area in a timely manner as is necessary to prevent overflow of the collection system.*	✓			The storage area is a steel reinforced concrete pad that is engineered to contain and collect any liquid spills from waste handling operations. Floor drains and curbs will direct liquids to a collection tank for sampling. The liquid collection system for the overpack unit consists of steel pipe leading from the unit low point (i.e., sump drain) to a sump. The sump is constructed of metal or concrete. The disposition of liquids collected in the sump is administratively controlled using WIPP standard operating procedures. The containers are within the concrete overpacks; therefore, they are kept from contact with standing liquids in the containment system.

Regulatory Framework for Hazardous Waste Containers & Hazardous Waste Container Storage Units						
Regulatory Citation(s) 20.4.1.900 NMAC (incorporating 40 CFR Part 270)	**Regulatory Citation(s) 20.4.1.500 NMAC (incorporating 40 CFR Part 264)**	**Description of Requirement**	**Above Ground Surface Storage Unit (Overpack Unit) Compliance**			
			Yes	**No**	**N/A**	**Comments**
	§264.175(c)(1)	*The storage area is sloped or otherwise designed and operated to drain and remove liquid resulting from precipitation, or*			✓	The storage area is a steel reinforced concrete pad that is engineered to contain and collect any liquid spills from waste handling operations. Floor drains and curbs will direct liquids to a collection tank for sampling. The liquid collection system for the overpack unit consists of steel pipe leading from the unit low point (i.e., sump drain) to a sump. The sump is constructed of metal or concrete. The disposition of liquids collected in the sump is administratively controlled. The containers are within the concrete overpacks; therefore, they are kept from contact with standing liquids in the containment system.
	§264.175(c)(2)	*The containers are elevated or otherwise protected from contact with accumulated liquid.*			✓	The containers are within the concrete overpacks; therefore, they are kept from contact with standing liquids in the containment system.
	§264.175(d)(1)	*Storage areas that store containers holding the wastes listed below that do not contain free liquids must have a containment system defined by paragraph (b) of this section: (1) F020, F021, F022, F023, F026, and F027.*			✓	These F listed EPA Hazardous Waste Numbers do not apply (i.e. these are not Permitted at the WIPP facility). The storage area is a steel reinforced concrete pad that is engineered to contain and collect any liquid spills from waste handling operations. Floor drains and curbs will direct liquids to a collection tank for sampling. The liquid collection system for the overpack unit consists of steel pipe leading from the unit low point (i.e., sump drain) to a sump. The sump is constructed of metal or concrete. The disposition of liquids collected in the sump is administratively controlled. The containers are within the concrete overpacks; therefore, they are kept from contact with standing liquids in the containment system.

2. 20.4.1.900 NMAC, incorporating 40 CFR §270.42(c)(1)(ii), requires the applicant to identify that the modification is a Class 3 modification.

The current WIPP facility container storage capacity includes two permitted storage units: the WHB Unit and the Parking Area Unit. The WHB Unit is permitted for up to 6,854 cubic feet of TRU mixed waste and the Parking Area Unit is permitted for up to 6,734 cubic feet of TRU mixed waste for a total facility storage capacity of 13,588 cubic feet of TRU mixed waste.

20.4.1.900, incorporating 40 CFR §270.42, Appendix I, Item F.1.a states that a modification or addition of container units resulting in greater than a 25% increase in the facility container storage capacity meets the definition of a Class 3 PMR.

Twenty five percent of the WIPP facility storage capacity = (0.25) × (13,588 cubic feet) = 3,397 cubic feet

The proposed action will add 65,280 cubic feet of TRU mixed waste to the WIPP facility container storage capacity, which is greater than a 25% increase in the current storage capacity; therefore, this modification is a Class 3.

3. 20.4.1.900 NMAC, incorporating 40 CFR §270.42(c)(1)(iii), requires the applicant to explain why the modification is needed.

The new AGSC project will add the capability to store TRU mixed waste on the surface prior to disposal in the underground. This will enhance the DOE capability to manage TRU mixed waste by limiting interruptions in shipping activities when it is necessary to stop emplacement activities at the WIPP facility for maintenance or other event that delays waste emplacement. Storage will be accomplished using concrete overpacks placed in the Overpack Unit.

Upon completion of the AGSC project, the Permittees will have the capability and space to store up to 8 weeks of CH TRU mixed waste shipments at 17 shipments per week for up to one year. Eight weeks was used because this was the approximate duration of previously planned maintenance outages at the facility. The volume requested is based on the nominal volume of the TDOP (160 cubic feet [4.5 cubic meters]) pursuant to Permit Part 3, Section 3.3.1.3. The TDOP overpack volume is used because it is the largest container that will be stored in a concrete overpack. The following summarizes how the proposed volume was calculated:

> 8 weeks × 17 shipments/week × 3 CH packages/shipment × 160 cubic feet/TDOP × 1 TDOP/package = 65,280 cubic feet [1,836 cubic meters]

This additional CH TRU mixed waste storage capacity includes RH waste in shielded containers that is managed and stored as CH waste pursuant to Permit Part 3, Section 3.3.1.8. Because the shielded containers are managed and stored as CH TRU mixed waste pursuant to the Permit Part 3, Section 3.3.1.8, no special provisions are required or proposed for storing shielded containers in concrete overpacks.

Increased storage capabilities (increased volume and one year storage time) through the lifetime of WIPP facility would effectively manage and refine operational and support capabilities for TRU mixed waste shipments and disposal operations with the following outcomes:

- Continued CH TRU mixed waste receipt during normal operational variability including short-term maintenance outages;
- Allowing for optimization of CH TRU mixed waste emplacement activities;
- Allowing the storage and management of CH TRU mixed waste for inventory and material at risk considerations.

The one year storage time is needed to optimize CH TRU mixed waste emplacement activities as described above. The one year storage time is typical of RCRA Treatment Storage and Disposal facilities pursuant to 20.4.1.800 NMAC, incorporating 40 CFR §268.50.

Changes to the Permit Attachment B, Hazardous Waste Permit Application for Part A, are needed to reflect the proposed Overpack Unit.

The change to Permit Attachment A1, Section A1-1d and Attachment D, Section D-1f to remove the requirements to stop shipments "in any event which results in an interruption to normal waste handling operations that exceeds three days" is being made because the Overpack Unit will provide sufficient storage capacity to accommodate this type of event/interruption.

Changes are being made to Permit Attachment G, Closure Plan including Table G-2, Anticipated Overall Schedule for Closure Activities, to ensure that the proposed Overpack Unit is addressed upon facility closure. Note however, that the dates in the schedule are not being updated at this time. Updates will be included in a future PMR.

4. 20.4.1.900 NMAC (incorporating 40 CFR §270.42(c)(1)(iv)), requires the applicant to provide the applicable information required by 40 CFR §§270.13 through 270.22, 270.62, 270.63, and 270.66.

The regulatory crosswalk describes those portions of the Permit that are affected by this PMR. Where applicable, regulatory citations in this reference Title 20, Chapter 4, Part 1, NMAC, revised March 1, 2009, incorporating the CFR, Title 40 (40 CFR Parts 264 and 270). Title 40 CFR §§270.16 through 270.22, 270.62, 270.63 and 270.66 are not applicable at the WIPP. Consequently, they are not listed in the regulatory crosswalk table.

5. 20.4.1.900 NMAC (incorporating 40 CFR §270.11[d][1] and 40 CFR §270.30[k]), requires any person signing under paragraphs a and b must certify the document in accordance with 20.4.1.900 NMAC.

The transmittal letter for this PMR contains the signed certification statement in accordance with Permit Part 1, Section 1.9.

Regulatory Crosswalk

Regulatory Citation(s) 20.4.1.900 NMAC (incorporating 40 CFR Part 270)	Regulatory Citation(s) 20.4.1.500 NMAC (incorporating 40 CFR Part 264)	Description of Requirement	Added or Clarified Information		
			Section of the WIPP Permit	Yes	No
§270.13		Contents of Part A permit application	Attachment B, Part A	✓	
§270.14(b)(1)		General facility description	Attachment A	✓	
§270.14(b)(2)	§264.13(a)	Chemical and physical analyses	Attachment C		✓
§270.14(b)(3)	§264.13(b)	Development and implementation of waste analysis plan	Attachment C		✓
	§264.13(c)	Off-site waste analysis requirements	Attachment C		✓
§270.14(b)(4)	§264.14(a-c)	Security procedures and equipment	Part 2.6		✓
§270.14(b)(5)	§264.15(a-d)	General inspection requirements	Attachment E	✓	
	§264.174	Container inspections	Attachment E	✓	
§270.23(a)(2)	§264.602	Miscellaneous units inspections	Attachment E	✓	
§270.14(b)(6)		Request for waiver from preparedness and prevention requirements of Part 264 Subpart C	NA		✓
§270.14(b)(7)	264 Subpart D	Contingency plan requirements	Attachment D	✓	
	§264.51	Contingency plan design and implementation	Attachment D	✓	
	§264.52 (a) & (c-f)	Contingency plan content	Attachment D	✓	
	§264.53	Contingency plan copies	Attachment D		✓
	§264.54	Contingency plan amendment	Attachment D	✓	
	§264.55	Emergency coordinator	Attachment D		✓
	§264.56	Emergency procedures	Attachment D	✓	
§270.14(b)(8)		Description of procedures, structures or equipment for:	Part 2.10		✓
§270.14(b)(8)(i)		Prevention of hazards in unloading operations (e.g., ramps and special forklifts)	Part 2.10	✓	
§270.14(b)(8)(ii)		Runoff or flood prevention (e.g., berms, trenches, and dikes)	Part 2.10	✓	
§270.14(b)(8)(iii)		Prevention of contamination of water supplies	Part 2.10		✓
§270.14(b)(8)(iv)		Mitigation of effects of equipment failure and power outages	Part 2.10		✓
§270.14(b)(8)(v)		Prevention of undue exposure of personnel (e.g., personal protective equipment)	Part 2.10		✓
§270.14(b)(8)(vi) §270.23(a)(2)	§264.601	Prevention of releases to the atmosphere	Part 4 Attachment A2 Attachment N	✓	
	264 Subpart C	Preparedness and Prevention	Part 2.10	✓	
	§264.31	Design and operation of facility	Part 2.10		✓
	§264.32	Required equipment	Part 2.10 Attachment D	✓	
	§264.33	Testing and maintenance of equipment	Attachment E	✓	

Regulatory Citation(s) 20.4.1.900 NMAC (incorporating 40 CFR Part 270)	Regulatory Citation(s) 20.4.1.500 NMAC (incorporating 40 CFR Part 264)	Description of Requirement	Added or Clarified Information		
			Section of the WIPP Permit	Yes	No
	§264.34	Access to communication/alarm system	Part 2.10		✓
	§264.35	Required aisle space	Part 2.10	✓	
	§264.37	Arrangements with local authorities	Attachment D		✓
§270.14(b)(9)	§264.17(a-c)	Prevention of accidental ignition or reaction of ignitable, reactive, or incompatible wastes	Part 2.10		✓
§270.14(b) (10)		Traffic pattern, volume, and controls, for example: Identification of turn lanes Identification of traffic/stacking lanes, if appropriate Description of access road surface Description of access road load-bearing capacity Identification of traffic controls	Attachment A4	✓	
§270.14(b) (11)(i) and (ii)	§264.18(a)	Seismic standard applicability and requirements	Part B, Rev. 6 Chapter B		✓
§270.14(b) (11)(iii-v)	§264.18(b)	100-year floodplain standard	Part B, Rev. 6 Chapter B		✓
	§264.18(c)	Other location standards	Part B, Rev. 6 Chapter B		✓
§270.14(b) (12)	§264.16(a-e)	Personnel training program	Part 2 Attachment F		✓
§270.14(b) (13)	264 Subpart G	Closure and post-closure plans	Attachment G & H	✓	
§270.14(b)(13)	§264.111	Closure performance standard	Attachment G	✓	
§270.14(b)(13)	§264.112(a), (b)	Written content of closure plan	Attachment G	✓	
§270.14(b)(13)	§264.112(c)	Amendment of closure plan	Attachment G		✓
§270.14(b)(13)	§264.112(d)	Notification of partial and final closure	Attachment G		✓
§270.14(b)(13)	§264.112(e)	Removal of wastes and decontamination/dismantling of equipment	Attachment G	✓	
§270.14(b)(13)	§264.113	Time allowed for closure	Attachment G	✓	
§270.14(b)(13)	§264.114	Disposal/decontamination	Attachment G	✓	
§270.14(b)(13)	§264.115	Certification of closure	Attachment G		✓
§270.14(b)(13)	§264.116	Survey plat	Attachment G		✓
§270.14(b)(13)	§264.117	Post-closure care and use of property	Attachment H		✓
§270.14(b)(13)	§264.118	Post-closure plan; amendment of plan	Attachment H		✓
§270.14(b)(13)	§264.178	Closure/ containers	Attachment G	✓	
§270.14(b)(13)	§264.601	Environmental performance standards-Miscellaneous units	Attachment G		✓
§270.14(b)(13)	§264.603	Post-closure care	Attachment G	✓	
§270.14(b)(14)	§264.119	Post-closure notices	Attachment H		✓

Regulatory Citation(s) 20.4.1.900 NMAC (incorporating 40 CFR Part 270)	Regulatory Citation(s) 20.4.1.500 NMAC (incorporating 40 CFR Part 264)	Description of Requirement	Added or Clarified Information		
			Section of the WIPP Permit	Yes	No
§270.14(b)(15)	§264.142	Closure cost estimate	NA		✓
	§264.143	Financial assurance	NA		✓
§270.14(b)(16)	§264.144	Post-closure cost estimate	NA		✓
	§264.145	Post-closure care financial assurance	NA		✓
§270.14(b)(17)	§264.147	Liability insurance	NA		✓
§270.14(b)(18)	§264.149-150	Proof of financial coverage	NA		✓
§270.14(b)(19)(i), (vi), (vii), and (x)		Topographic map requirements Map scale and date Map orientation Legal boundaries Buildings Treatment, storage, and disposal operations Run-on/run-off control systems Fire control facilities	Attachment B Part A	✓	
§270.14(b)(19)(ii)	§264.18(b)	100-year floodplain	Attachment B Part A		✓
§270.14(b)(19)(iii)		Surface waters	Attachment B Part A		✓
§270.14(b)(19)(iv)		Surrounding Land use	Attachment B Part A		✓
§270.14(b)(19)(v)		Wind rose	Attachment B Part A		✓
§270.14(b)(19)(viii)	§264.14(b)	Access controls	Attachment B Part A		✓
§270.14(b)(19)(ix)		Injection and withdrawal wells	Attachment B Part A		✓
§270.14(b)(19)(xi)		Drainage on flood control barriers	Attachment B Part A		✓
§270.14(b)(19)(xii)		Location of operational units	Attachment B Part A	✓	
§270.14(b)(20)		Other federal laws Wild and Scenic Rivers Act National Historic Preservation Act Endangered Species Act Coastal Zone Management Act Fish and Wildlife Coordination Act Executive Orders	Attachment B Part A		✓
§270.15	§264 Subpart I	Containers	Attachment A1	✓	
	§264.171	Condition of containers	Attachment A1		✓
	§264.172	Compatibility of waste with containers	Attachment A1		✓
	§264.173	Management of containers	Attachment A1	✓	
	§264.174	Inspections	Attachment E Attachment A1	✓	
§270.15(a)	§264.175	Containment systems	Attachment A1	✓	

Regulatory Citation(s) 20.4.1.900 NMAC (incorporating 40 CFR Part 270)	Regulatory Citation(s) 20.4.1.500 NMAC (incorporating 40 CFR Part 264)	Description of Requirement	Added or Clarified Information		
			Section of the WIPP Permit	Yes	No
§270.15(c)	§264.176	Special requirements for ignitable or reactive waste	Part 2		✓
§270..15(d)	§264.177	Special requirements for incompatible wastes	Part 2		✓
	§264.178	Closure	Attachment G	✓	
§270.15(e)	§264.179	Air emission standards	Part 4 Attachment N		✓
§270.23	264 Subpart X	Miscellaneous units	Attachment A2 Attachment O		✓
§270.23(a)	§264.601	Detailed unit description	Attachment A2 Attachment O	✓	
§270.23(b)	§264.601	Hydrologic, geologic, and meteorologic assessments	Part 5 Attachment L		✓
§270.23(c)	§264.601	Potential exposure pathways	Part 4 Attachment A2 Attachment N		✓
§270.23(d)		Demonstration of treatment effectiveness	NA		✓
	§264.602	Monitoring, analysis, inspection, response, reporting, and corrective action	Part 2 Part 4 Part 5 Attachment A2 Attachment N Attachment O	✓	
	§264.603	Post-closure care	Attachment H Attachment H1		✓
	264 Subpart E	Manifest system, record keeping, and reporting	Part 2 Attachment C		✓

Appendix A
Table of Changes

Table of Changes

Affected Permit Section	Explanation of Change	Page Number
Part 3, Section 3.1.	Delete “and” after Building and added “, and Concrete Overpack” after Parking Area.	B-2
Part 3, Section 3.1.1. Table 3.1.1	Added note to table to clarify possible combinations of container configurations with an asterisk indicator in the heading row in the “Container Equivalent” column. Added “or any combination of the above with loaded concrete overpacks not to exceed a total of 4 loaded concrete overpacks” to the CH Bay Storage Area row in the Container Equivalent column.	B-2
Part 3, Section 3.1.1.5.	Added “and Storage in Concrete Overpacks” to the heading. Added “or inside closed concrete overpacks as described in Permit Attachment A1” to end of paragraph.	B-3
Part 3, Section 3.1.1.8.	Added “or concrete overpacks” after pallets.	B-3
Part 3, Section 3.1.3.	Added new section “3.1.3. Concrete Overpack Container Storage Unit” describing the concrete overpack container storage unit.	B-3
Part 3, Section 3.6.	Replaced “and” with “, the” after WHB Unit and added “, and the Overpack Unit” after Area Unit.	B-5
Part 3, Section 3.7.	Replaced “and” with “, the” after WHB Unit and added “, and the Overpack Unit” after Area Unit.	B-5
Part 3, Section 3.7.3.	Added new section “3.7.3 Inspection of Closed Concrete Overpacks” describing inspection of overpacks.	B-5
Part 3 Table of Contents	Added entries for new Sections 3.1.3., 3.1.3.1., 3.1.3.2., 3.1.3.3., 3.1.3.4., 3.1.3.5., 3.1.3.6. and 3.7.3.	B-6
Part 6, Section 6.9.	Replaced “and” with “, the” after WHB Unit and added “, and the Overpack Unit” after Area Unit.	B-8
Attachment A, A-3	Replaced “34.16” with “approximately 40” after encompasses.	B-9
Attachment A, A-4	Replaced “two” with “three” in two places Added “The third area designated for managing and storing TRU mixed waste is the Concrete Overpack Container Storage Unit (**Overpack Unit**), an outside container storage area which extends south from the rail siding. The Overpack Unit provides storage space for loaded concrete overpacks on a steel reinforced concrete pad.” after concrete surface. Replaced “and” with “,” after WHB Unit and added “, and the Overpack Unit” after Area Unit.	B-9
Attachment A1, Table of Contents	Added entries for new Sections A1-1c(3) and A1-1e(3).	B-10
Attachment A1, List of Figures	Added entries for new Figures A1-38 and A1-39	B-11
Attachment A1, Introduction	Deleted “and” after (Figure A1-1), and added “, and the Concrete Overpack Container Storage Unit (**Overpack Unit**) (Figure A1-38)” after (Figure A1-2).	B-13
Attachment A1, A1-1c	Added new section “A1-1c(3) Concrete Overpack Container Storage Unit (Overpack Unit) describing the overpack unit.	B-13
Attachment A1, A1-1d	Replaced “Shipments” with “The Overpack Unit will allow the	B-13

Affected Permit Section	Explanation of Change	Page Number
	Permittees to continue shipments" at start of paragraph after bullets. Added "until the Overpack Unit reaches its capacity at which time shipments" after generator sites. Deleted "in any event which results in an interruption to normal waste handling operations that exceeds three days"	
Attachment A1, A1-1d(4)	Replaced "on" to "onto either" and added "for downloading to the underground or they are placed into a concrete overpack for storage in the Overpack Unit" after the word pallet.	B-14
Attachment A1, A1-1e(2)	Deleted the sentence "The DOE will stop shipments of waste for any equipment outage that will extend beyond three days." at the end of the paragraph.	B-14
Attachment A1, A1-1e(3)	Added new section describing the inspection requirements of the Overpack Unit.	B-14
Attachment A1, A1-1f(2)	Added new heading and paragraph describing how containers are stored inside of the Overpack Unit.	B-15
Attachment A1, A1-1i	Added a third paragraph "In the Overpack Unit, the containers of TRU mixed waste are always in closed concrete overpacks on a concrete/berm pad which protect them from precipitation and run on. Therefore, the WIPP container storage unit will comply with the requirements of 20.4.1.500 NMAC (incorporating 40 CFR §264.175(b)(4))."	B-15
Attachment A1, Table A1-2	Added "46,100 lbs. (Concrete overpack forklift)" to second column of row for surface forklifts. Added row with "Concrete overpack with lid" in first column and "46,100 lbs." in second column. Added row with "Concrete overpack with lid" in first column and "32,100 lbs." in second column.	B-16
Attachment A1, Figure A1-38	Added new figure showing a Concrete Overpack Container Storage Unit.	B-17
Attachment A1, Figure A1-39	Added new figure showing a Typical Concrete Overpack.	B-18
Attachment A2-2b	Replaced "on" to "onto either" and added "for downloading to the underground or they will be placed into a concrete overpack for storage in the Overpack Unit. If the waste containers are placed onto a facility pallet, each stack of waste containers will be secured prior to transport underground (see Figure A2-3)" after pallet in first paragraph. Deleted "Each stack of waste containers will be secured prior to transport underground (see Figure A2-3)." in first paragraph. Added two paragraphs to A2-2b describing the basic operations for the Overpack Unit storage area.	B-19
Attachment A2, Table A2-1	Added row with "Concrete overpack forklift" in first column and "46,100 lbs." in second column. Added row with "Concrete overpack with lid" in first column and "46,100 lbs." in second column. Added row with "Concrete overpack with lid" in first column and "32,100 lbs." in second column.	B-22
Attachment A2, Figure A2-12	Updated both pages of this figure to show the updated process for mixed waste.	B-23

Affected Permit Section	Explanation of Change	Page Number
Attachment A4, Table of Contents	Added entry for “A4-5 Concrete Overpack Container Storage Unit Traffic” to the Table of Contents.	B-25
Attachment A4, List of Figures	Added two new entries for “Figure A4-8 Waste Transport Routes in WHB – Concrete Overpack Loading and Unloading” and “Figure A4-9 Waste Transport Routes Designated for the Concrete Overpack Container Storage Unit” to the List of Figures.	B-26
Attachment A4, A4-5	Added new section A4-5 describing the “Concrete Overpack Container Storage Unit Traffic and Process Summary”	B-27
Attachment A4, Figures	Added two new figures “Figure A4-8 Waste Transport Routes in WHB – Concrete Overpack Loading and Unloading” and “Figure A4-9 Waste Transport Routes Designated for the Concrete Overpack Container Storage Unit”.	B-28 and B-29
Attachment B, Table of Contents	Added new entry “Figure B3-5 Concrete Overpack Container Storage Unit” to Table of Contents.	B-30
Attachment B, Part A	Replaced “two” with “three” in third paragraph under 7. Processes—Codes and Design Capacities. Added “The third S01 HWMU is the Concrete Overpack Container Storage Unit south of the rail siding where closed concrete overpacks will be stored awaiting waste handling operations. The capacity of this S01 unit is 1,821 m^3, based on 1 TDOP stored in one each of 408 concrete overpacks.” to third paragraph under 7. Processes—Codes and Design Capacities. Deleted “and” and added “, and B3-5” to end of third paragraph.	B-31
Attachment B, Figure B2-2	Replaced figure to a more legible figure and extended the Property Protection Area	B-32
Attachment B, Figure B2-2a	Replaced figure to a more legible figure and replaced “35” with “40” in Note 1	B-34
Attachment B, Figure B3-5	Added new figure “Figure B3-5 Concrete Overpack Container Storage Unit”	B-36
Attachment D, D-1e	Deleted the sentence “These areas are being permitted as container storage units.” Added “The Concrete Overpack Container Storage Unit, south of the rail siding, will be used for storage of waste in closed concrete overpacks. This area is a container storage unit. The closed concrete overpacks provide secondary containment in this HWMU.	B-37
Attachment D, D-1f	Deleted section in its entirety.	B-37
Attachment E, E1-b(1)	Made the following changes to the first paragraph. Added “and the Concrete Overpack Container Storage Unit” in two places. Added “or loaded concrete overpacks” in four places. Added the word “either” in one place. Added “and inspections of the loaded concrete overpacks” in one place. Replaced “and” with “, the” after Area Unit and added “, and the Overpack Unit” after WHB Unit in second paragraph.	B-38
Attachment E, Table E-1	Added “the Overpack Unit,” to note designator k under Inspection Schedule/Procedures Notes.	B-39

Affected Permit Section	Explanation of Change	Page Number
Attachment G, Introduction	Replaced “and” with “,” and added “, and the Concrete Overpack Container Storage Unit (**Overpack Unit**)” in the first paragraph. Added “the Overpack Unit” in two places in both paragraphs of the Introduction.	B-40
Attachment G-1	Replaced “and” with “,” in two places, added “and the Overpack Unit” in one place and added ‘, and Overpack Unit” in one place.	B-40
Attachment G-1a(1)	Replaced “and” with “,” and added “and the Overpack Unit	B-40
Attachment G-1b	Replaced “and in” with “,” and added “, and in the Overpack Unit”	B-41
Attachment G-1c	Deleted “and” and added “, and the Overpack Unit” in second paragraph.	B-41
Attachment G-1e(2)(b)	Added “, soil in the Overpack Unit”	B-42
Attachment G, Table G-2	Replaced “both” with “the” in three places in the table.	B-43
Attachment J, List of Tables	Added entry for new table “Table J-3 Concrete Overpack Container Storage Unit and renumbered “Table J-3” to “Table J-4” in the List of Tables.	B-44
Attachment J	Added new table “Table J-3 Concrete Overpack Container Storage Unit” and renumbered “Table J-3” to “Table J-4”	B-45

Appendix B
Proposed Revised Permit Text

PART 3 - CONTAINER STORAGE

3.1 DESIGNATED CONTAINER STORAGE UNITS

This Part authorizes the storage and management of transuranic (**TRU**) mixed waste containers in the Waste Handling Building, ~~and~~ Parking Area, and Concrete Overpack Container Storage Units described below. Specific facility and process information for the storage and management of TRU mixed waste in these Container Storage Units is incorporated in Permit Attachment A1 (Container Storage).

Table 3.1.1 - WHB Unit

Description	Area	Maximum Capacity	Container Equivalent*
CH Bay Storage Area	32,307ft^2 (3,001 m^2)	4,800 ft^3 (135.9 m^3)	13 loaded facility pallets and 4 CH Packages at the TRUDOCKS or any combination of the above with loaded concrete overpacks not to exceed a total of 4 loaded concrete overpacks
CH Bay Surge Storage Area	included in CH Bay Storage Area	1,600 ft^3 (45.3 m^3)	5 loaded facility pallets
Derived Waste Storage Area	included in CH Bay Storage Area	66.3 ft^3 (1.88 m^3)	1 Standard Waste Box
Total for CH Waste	32,307 ft^2 (3,001 m^2)	**6,466.3 ft^3 183.1 m^3**	
RH Bay	12,552 ft^2 (1,166 m^2)	156 ft^3 (4.4 m^3)	2 loaded casks and 1 drum of derived waste
Cask Unloading Room	382 ft^2 (36 m^2)	74 ft^3 (2.1 m^3)	1 loaded cask
Hot Cell	1,841 ft^2 (171 m^2)	94.9 ft^3 (2.7 m^3)	12 drums and 1 drum of derived waste
Transfer Cell	1,003 ft^2 (93 m^2)	31.4 ft^3 (0.89 m^3)	1 canister
Facility Cask Loading Room	1,625 ft^2 (151 m^2)	31.4 ft^3 (0.89 m^3)	1 canister
Total for RH Waste	**17,403 ft^2 (1,617 m^2)**	**387.7 ft^3 (11.0 m^3)**	

Facility Total	**49,710 ft^2 (4,618 m^2)**	**6,854 ft^3 (194.1 m^3)**	

*The container equivalent listed for CH Bay Storage Area are examples of possible combinations of container configurations. This is not an exhaustive list and other container combinations are possible.

3.1.1.5 Storage on Pallets and Storage in Concrete Overpacks

The Permittees shall store TRU mixed waste containers unloaded from the Contact-Handled Packages (**TRUPACT-II, HalfPACT, or TRUPACT III** shipping containers) on pallets in the WHB Unit, as described in Permit Attachment A1, Section A1-1c(1), or inside closed concrete overpacks as described in Permit Attachment A1.

3.1.1.8 Minimum Aisle Space

The Permittees shall maintain a minimum aisle space of 44 inches (1.1 m) between facility pallets or concrete overpacks in the CH Bay of the WHB Unit. The Permittees shall maintain adequate aisle space of 44 inches (1.1 m) between loaded casks in the RH Bay of the WHB Unit. For other locations within the RH Complex, sufficient aisle space will be maintained to assure that emergency equipment can be accessed or moved to the necessary locations.

3.1.3 Concrete Overpack Container Storage Unit

The Concrete Overpack Container Storage Unit (**Overpack Unit**) is a concrete surface extending south of the rail sidings, within the Controlled Area. The storage area is a steel reinforced concrete pad that is engineered to contain and collect any liquid spills from waste handling operations. Floor drains and curbs will direct liquids to a collection tank for sampling as needed. The storage area will also be configured to provide safe drive-through access for forklifts handling overpacks. Provisions shall be made to direct rainwater from the sample tank directly to the site settling pond when there is no overpack transport, handling, or storage activity on the Overpack Unit. A fire water line shall be provided to feed approximately 500 gallons per minute to a fire hydrant. The Overpack Unit shall be enclosed by chain link fence. The Overpack Unit shall comprise a surface area of no more than 96,490 ft^2 (8,964 m^2), as depicted in Permit Attachment A1, Figure A1-38.

The Permittees may store and manage TRU mixed waste in the Overpack Unit, provided the Permittees comply with the following conditions:

3.1.3.1 Storage Containers

The Permittees shall store TRU mixed waste in containers specified in Permit Section 3.3.1. These TRU mixed waste containers shall be stored within concrete overpacks as described in Permit Attachment A1.

3.1.3.2 Storage Locations and Quantities

The Permittees shall store TRU mixed waste containers in any location within the Overpack Unit, as specified in Table 3.1.3 below. The Permittees may store quantities of TRU mixed waste containers within the Overpack Unit not to exceed the maximum capacities specified in Table 3.1.3 below.

Table 3.1.3 - Overpack Unit

Description	**Area**	**Maximum Waste Capacity**	**Container Equivalent**
Overpack Unit	96,490 ft^2 (8,964 m^2)	65,280 ft^3 (1,836 m^3)	408 loaded concrete overpacks

3.1.3.3 Prohibition on Opening the Concrete Overpacks

The Permittees shall keep the concrete overpacks closed at all times while in the Overpack Unit. Waste will be loaded and unloaded into the concrete overpacks in the WHB only.

3.1.3.4 Storage Time Limit

The Permittees shall not store TRU mixed waste containers in concrete overpacks for more than 365 days after the date the concrete overpack was loaded with TRU mixed waste containers.

3.1.3.5 Minimum Aisle Space

The Permittees shall maintain a minimum spacing of 4 ft. (1.2 m) between loaded concrete overpacks.

3.1.3.6 Marking

Overpacks will be marked in accordance with Permit Part 3, Section 3.7.2.

3.6 CONTAINMENT SYSTEMS

The Permittees shall maintain the secondary containment systems for all containers managed in the WHB Unit, ~~and~~ the Parking Area Unit, and the Overpack Unit as specified in Permit Attachment A1, Section A1-1f, and as required by 20.4.1.500 NMAC (incorporating 40 CFR §264.175).

3.7 INSPECTION SCHEDULES AND PROCEDURES

The Permittees shall inspect the WHB Unit, ~~and~~ the Parking Area Unit, and the Overpack Unit TRU mixed waste container storage and management areas at least weekly, in accordance with Permit Attachment E (Inspection Schedule, Process and Forms), Tables E-1 and E-1a, and Permit Attachment A1, Section A1-1e, to detect leaking containers and deterioration of containers and the containment system caused by corrosion and other factors, as required by 20.4.1.500 NMAC (incorporating 40 CFR §264.174).

3.7.3. Inspection of Closed Concrete Overpacks

The Permittees shall not be required to inspect the contents of closed concrete overpacks stored in compliance with Permit Section 3.1.3 and Permit Attachment A1, Section A1-1e(3).

PART 3 - CONTAINER STORAGE .....
3.1. DESIGNATED CONTAINER STORAGE UNITS .....
3.1.1. Waste Handling Building Container Storage Unit .....
3.1.1.1. Storage Containers .....
3.1.1.2. Storage Locations and Quantities .....
3.1.1.3. Use of CH Bay Surge Storage .....
3.1.1.4. Notification of CH Bay Surge Storage Use .....
3.1.1.5. Storage on Pallets .....
3.1.1.6. Storage of Derived Waste .....
3.1.1.7. CH TRU Mixed Waste Storage Time Limit .....
3.1.1.8. Minimum Aisle Space .....
3.1.1.9. Storage of RH TRU Mixed Waste Containers .....
3.1.1.10. RH TRU Mixed Waste Storage Time Limit .....
3.1.1.11. Hot Cell RH TRU Mixed Waste Processing Capacity .....
3.1.2. Parking Area Container Storage Unit .....
3.1.2.1. Storage Containers .....
3.1.2.2. Storage Locations and Quantities .....
3.1.2.3. Use of Parking Area Surge Storage .....
3.1.2.4. Notification of Parking Area Surge Storage Use .....
3.1.2.5. Prohibition on Opening Shipping Containers .....
3.1.2.6. Storage Time Limit .....
3.1.2.7. Minimum Aisle Space .....
3.1.3. Concrete Overpack Container Storage Unit .....
3.1.3.1. Storage Containers .....
3.1.3.2. Storage Locations and Quantities .....
3.1.3.3. Prohibition of Opening the Concrete Overpacks .....
3.1.3.4. Storage Time Limits .....
3.1.3.5. Minimum Aisle Space .....
3.1.3.6. Marking .....
3.2. PERMITTED AND PROHIBITED WASTE IDENTIFICATION .....
3.2.1. Permitted Waste .....
3.2.1.1. Waste Analysis Plan .....
3.2.1.2. TSDF Waste Acceptance Criteria .....
3.2.1.3. Hazardous Waste Numbers .....
3.2.2. Prohibited Waste .....
3.3. CONDITION OF CONTAINERS .....
3.3.1. Acceptable Storage Containers .....
3.3.1.1. Standard 55-gallon (208-liter) Drum .....
3.3.1.2. Standard Waste Box (**SWB**) .....
3.3.1.3. Ten-drum Overpack (**TDOP**) .....
3.3.1.4. 85-gallon (322-liter) Drum .....
3.3.1.5. 100-gallon (379-liter) Drum .....
3.3.1.6. RH TRU Canister .....
3.3.1.7. Standard Large Box 2 (**SLB2**) .....
3.3.1.8. Shielded Container* .....
3.3.2. Derived Waste Containers .....

3.4. COMPATIBILITY OF WASTE WITH CONTAINERS .....
3.5. MANAGEMENT OF CONTAINERS .....
3.6. CONTAINMENT SYSTEMS .....
3.7. INSPECTION SCHEDULES AND PROCEDURES .....
3.7.1. Inspection of 55-Gallon Drum Seven-Packs.....
3.7.2. Inspection of Sealed Contact-Handled or Remote-Handled Packages .....
3.7.3. Inspection of Closed Concrete Overpacks.....
3.8. RECORDKEEPING .....

PART 6 – CLOSURE REQUIREMENTS

6.9 CLOSURE OF PERMITTED CONTAINER STORAGE UNITS

At closure of the WHB Unit, ~~and~~ the Parking Area Unit, and the Overpack Unit, the Permittees shall remove all hazardous waste and hazardous waste residues from the containment system, in accordance with the procedures in Permit Attachment G, as required by 20.4.1.500 NMAC (incorporating 40 CFR §§264.111 and 264.178).

ATTACHMENT A

GENERAL FACILITY DESCRIPTION AND PROCESS INFORMATION

A-3 Property Description

The WIPP property has been divided into functional areas. The Property Protection Area (**PPA**), surrounded by a chain-link security fence, encompasses ~~34.16~~ approximately 40 acres and provides security and protection for all major surface structures. The DOE Off Limits Area encloses the PPA, and is approximately 1,454 acres. These areas define the DOE exclusion zone within which certain items and material are prohibited. The final zone is marked by the WIPP Site Boundary (WIPP Land Withdrawal Area), a 16-section Federal land area under the jurisdiction of the DOE.

A-4 Facility Type

There are three basic groups of structures associated with the WIPP facility: surface structures, shafts and underground structures. The surface structures accommodate the personnel, equipment, and support services required for the receipt, preparation, and transfer of TRU mixed waste from the surface to the underground. There are ~~two~~ three surface locations where TRU mixed waste is managed and stored. The first area is the Waste Handling Building (**WHB**) Container Storage Unit (**WHB Unit**) for TRU mixed waste management and storage. The WHB Unit consists of the WHB contact-handled (**CH**) Bay and the remote-handled (**RH**) Complex. The second area designated for managing and storing TRU mixed waste is the Parking Area Container Storage Unit (**Parking Area Unit**), an outside container storage area which extends south from the WHB to the rail siding. The Parking Area Unit provides storage space for up to 50 loaded Contact-Handled Packages and 14 loaded Remote-Handled Packages on an asphalt and concrete surface. The third area designated for managing and storing TRU mixed waste is the Concrete Overpack Container Storage Unit (**Overpack Unit**), an outside container storage area which extends south from the rail siding. The Overpack Unit provides storage space for loaded concrete overpacks on a steel reinforced concrete pad. Part 3 of the permit authorizes the storage and management of CH and RH TRU mixed waste containers in these ~~two~~ three surface locations. The technical requirements of 20.4.1.500 NMAC (incorporating 40 CFR §§264.170 to 264.178) are applied to the operation of the WHB Unit, ~~and~~ the Parking Area Unit, and the Overpack Unit. Permit Attachment A1 describes the container storage units, the TRU mixed waste management facilities and operations, and compliance with the technical requirements of 20.4.1.500 NMAC.

ATTACHMENT A1

CONTAINER STORAGE

TABLE OF CONTENTS

Introduction .....

A1-1 Container Storage .....
- A1-1a Containers with Liquid .....
- A1-1b Description of Containers .....
  - A1-1b(1) CH TRU Mixed Waste Containers .....
  - A1-1b(2) RH TRU Mixed Waste Containers .....
  - A1-1b(3) Container Compatibility.....
- A1-1c Description of the Container Storage Units .....
  - A1-1c(1) Waste Handling Building Container Storage Unit (WHB Unit) .....
  - A1-1c(2) Parking Area Container Storage Unit (Parking Area Unit) .....
  - A1-1c(3) Concrete Overpack Container Storage Unit (Overpack Unit) .....
- A1-1d Container Management Practices .....
  - A1-1d(1) Derived Waste .....
  - A1-1d(2) CH TRU Mixed Waste Handling .....
  - A1-1d(3) RH TRU Mixed Waste Handling .....
  - A1-1d(4) Handling Waste in Shielded Containers .....
- A1-1e Inspections .....
  - A1-1e(1) WHB Unit .....
  - A1-1e(2) Parking Area Unit.....
  - A1-1e(3) Overpack Unit .....
- A1-1f Containment .....
  - A1-1f(1) Secondary Containment Requirements for the WHB Unit .....
  - A1-1f(2) Secondary Containment Description .....
- A1-1g Special Requirements for Ignitable, Reactive, and Incompatible Waste .....
- A1-1h Closure .....
- A1-1i Control of Run On .....

References.....

LIST OF TABLES

Table	Title
Table A1-1	Basic Design Requirements, Principal Codes, and Standards
Table A1-2	Waste Handling Equipment Capacities
Table A1-3	RH TRU Mixed Waste Handling Equipment Capacities

LIST OF FIGURES

Figure	Title
Figure A1-1	Waste Handling Building - CH TRU Mixed Waste Container Storage and Surge Areas
Figure A1-1a	Waste Handling Building Plan (Ground Floor)
Figure A1-1b	Waste Handling Building Plan (Room 108 Detail)
Figure A1-2	Parking Area - Container Storage and Surge Areas
Figure A1-3	Standard 55-Gallon Drum (Typical)
Figure A1-4	Standard Waste Box
Figure A1-5	Ten-Drum Overpack
Figure A1-6	85-Gallon Drum
Figure A1-8a	TRUPACT-II Shipping Container for CH Transuranic Mixed Waste (Schematic)
Figure A1-8b	Typical HalfPACT Shipping Container for CH Transuranic Mixed Waste (Schematic)
Figure A1-10	Facility Pallet for Seven-Pack of Drums
Figure A1-10a	Typical Containment Pallet
Figure A1-11	Facility Transfer Vehicle, Facility Pallet, and Typical Pallet Stand
Figure A1-12	TRUPACT-II Containers on Trailer
Figure A1-13	WIPP Facility Surface and Underground CH Transuranic Mixed Waste Process Flow Diagram
Figure A1-14a	RH Bay Ground Floor
Figure A1-15	100-Gallon Drum
Figure A1-16	Facility Canister Assembly
Figure A1-16a	RH-TRU 72-B Canister Assembly
Figure A1-17a	RH Bay, Cask Unloading Room, Hot Cell, Facility Cask Loading Room
Figure A1-17b	RH Hot Cell Storage Area
Figure A1-17c	RH Canister Transfer Cell Storage Area
Figure A1-17d	RH Facility Cask Loading Room Storage Area
Figure A1-18	RH-TRU 72-B Shipping Cask on Trailer
Figure A1-19	CNS 10-160B Shipping Cask on Trailer
Figure A1-20	RH-TRU 72-B Shipping Cask for RH Transuranic Waste (Schematic)
Figure A1-21	CNS 10-160B Shipping Cask for RH Transuranic Waste (Schematic)
Figure A1-22a	RH-TRU 72-B Cask Transfer Car
Figure A1-22b	CNS 10-160B Cask Transfer Car
Figure A1-23	RH Transuranic Waste Facility Cask
Figure A1-24	RH Facility Cask Transfer Car (Side View)
Figure A1-25	CNS 10-160B Drum Carriage
Figure A1-26	Surface and Underground RH Transuranic Mixed Waste Process Flow Diagram for RH-TRU 72-B Shipping Cask

Figure A1-27 Surface and Underground RH Transuranic Mixed Waste Process Flow Diagram for CNS 10-160B Shipping Cask
Figure A1-28 Schematic of the RH Transuranic Mixed Waste Process for RH-TRU 72-B Shipping Cask
Figure A1-29 Schematic of the RH Transuranic Mixed Waste Process for CNS 10-160B Shipping Cask
Figure A1-30 RH Shielded Insert Assembly
Figure A1-31 Transfer Cell Shuttle Car
Figure A1-32 Facility Rotating Device
Figure A1-33 Typical TRUPACT-III
Figure A1-34 Typical Standard Large Box 2
Figure A1-35 Typical Yard Transfer Vehicle
Figure A1-36 Payload Transfer Station
Figure A1-37 Typical Shielded Container
Figure A1-38 Concrete Overpack Container Storage Unit
Figure A1-39 Typical Concrete Overpack

ATTACHMENT A1

CONTAINER STORAGE

Introduction

Management and storage of transuranic (**TRU**) mixed waste in the Waste Isolation Pilot Plant (**WIPP**) facility is subject to regulation under 20.4.1.500 NMAC. The technical requirements of 20.4.1.500 NMAC (incorporating 40 CFR §§264.170 to 264.178 are applied to the operation of the Waste Handling Building Container Storage Unit (**WHB Unit**)(Figure A1-1), ~~and~~ the Parking Area Container Storage Unit (**Parking Area Unit**)(Figure A1-2), and the Concrete Overpack Container Storage Unit (**Overpack Unit**) (Figure A1-38). This Permit Attachment describes the container storage units, the TRU mixed waste management facilities and operations, and compliance with the technical requirements of 20.4.1 NMAC. The configuration of the WIPP facility consists of completed structures, including all buildings and systems for the operation of the facility.

A1-1c Description of the Container Storage Units

A1-1c(3) Concrete Overpack Container Storage Unit (Overpack Unit)

The area south of the rail siding (see Figure A1-38) will be used for storage of TRU mixed waste containers within concrete overpacks. The Overpack Unit provides storage space for up to 65,280 ft^3 (1,836 m^3) of TRU mixed waste, contained in up to 408 loaded engineered concrete overpacks. Secondary containment and protection of the waste containers from standing liquid are provided by the concrete overpacks. Concrete overpacks placed in the Overpack Unit will remain closed while in this area. The maximum residence time for waste stored in concrete overpacks is 365 days from the date TRU mixed waste containers were placed into the concrete overpack.

The concrete overpacks are made of steel reinforced concrete with a removable concrete lid. They are designed to function as the secondary containment barrier when loaded with TRU mixed waste. Each overpack is sized to hold up to fourteen (14) 55-gallon TRU mixed waste drums or equivalent sized TRU waste containers (i.e., SWBs or TDOPs).

A1-1d Container Management Practices

20.4.1.500 NMAC (incorporating 40 CFR §264.173) requires that containers be managed in a manner that does not result in spills or leaks. Containers are required to be closed at all times, unless waste is being placed in the container or removed. Because containers at the WIPP will contain radioactive waste, safety concerns require that containers be continuously vented to obviate the buildup of gases within the container. These gases could result from radiolysis, which is the breakdown of moisture by radiation. The vents, which are nominally 0.75 in. (1.9 centimeters [cm]) in diameter, are generally installed on or near the lids of the containers. These vents are filtered so that gas can escape while particulates are retained.

TRU mixed waste containers, containing off-site waste, are never opened at the WIPP facility. Derived waste containers are kept closed at all times unless waste is being added or removed.

Off-normal events could interrupt normal operations in the waste management process line. These off normal events fall into the following categories:

- Waste management system equipment malfunctions
- Waste shipments with unacceptable levels of surface contamination
- Hazardous Waste Manifest discrepancies that are not immediately resolved
- A suspension of emplacement activities for regulatory reasons

The Overpack Unit will allow the Permittees to continue ~~Shipments~~ shipments of waste from the generator sites until the Overpack Unit reaches its capacity, at which time shipments will be stopped ~~in any event which results in an interruption to normal waste handling operations that exceeds three days~~.

A1-1d(4) Handling Waste in Shielded Containers

Remote-Handled TRU mixed waste received at the WIPP facility in shielded containers will be managed, stored, and emplaced as CH TRU mixed waste using the CH TRU mixed waste handling equipment described in this Permit. Shielded containers with RH TRU mixed waste will arrive by tractor-trailer at the WIPP facility in sealed HalfPACTs. Prior to unloading the packages from the trailer, they will undergo security and radiological checks and shipping documentation reviews. Consistent with the handling of HalfPACT shipping packages in Section A1-1d(2), a forklift will remove the HalfPACT and transport it into the WHB and place the HalfPACT at either one of the two TRUDOCKs in the TRUDOCK Storage Area of the WHB Unit.

An external survey of the HalfPACT ICV will be performed as the OCV lid is removed. The ICV lid or closure lid will be lifted under the VHS, and the contents will be surveyed during and after this process is complete. A description of the VHS and criteria that are applied if radiological contamination is detected are discussed in Section A1-1d(2).

Shielded containers will be received as three-pack assemblies in HalfPACTs. An overhead bridge crane will be used to remove the contents of the shielded container assembly and place them on~~to~~ either a facility pallet for downloading to the underground or into a concrete overpack for storage in the Overpack Unit. The containers will be visually inspected for physical damage (severe rusting, apparent structural defects, signs of pressurization, etc.) and leakage to ensure they are in good condition prior to storage. Waste containers will also be checked for external surface contamination. If a primary waste container is not in good condition, the Permittees will overpack the container, repair/patch the container in accordance with 49 CFR §173 and §178 (e.g., 49 CFR §173.28), or return the container to the generator.

A1-1e Inspections

A1-1e(2) Parking Area Unit

The DOE believes that this strategy minimizes both the amount of shipping that is necessary and the amount of waste handling, while maintaining a reasonable inspection schedule. ~~The DOE will stop shipments of waste for any equipment outage that will extend beyond three days~~.

A1-1e(3) Overpack Unit

Inspections will be conducted in the Overpack Unit (Figure A1-3) at a frequency not less than once weekly when waste is present. These inspections are applicable to loaded, stored

concrete overpacks. Inspections of the concrete overpacks stored in the Overpack Unit will focus on the inventory (number of concrete overpacks present) and integrity of the overpacks and the spacing between overpacks. This spacing will be maintained at a minimum of four feet.

A1-1f Containment

A1-1f(2) Secondary Containment Description

Derived Waste Storage Area

The derived waste containers in the Derived Waste Storage Area will be stored on standard drum pallets, which provides approximately 50 gal (190 L) of secondary containment capacity. Thus the secondary containment capacity of the standard drum pallet is sufficient to contain a release of ten percent of one percent of the largest container (4.96 gal or 18.8 L).

Parking Area Unit

Containers of TRU mixed waste to be stored in the Parking Area Unit will be in Contact-Handled or Remote-Handled Packages. There will be no additional requirements for engineered secondary containment systems.

Overpack Unit

Containers of TRU mixed waste to be stored in the Overpack Unit will be inside concrete overpacks. There will be no additional requirements for engineered secondary containment systems.

A1-1i Control of Run On

The WHB Unit is located indoors which prevents run-on from a precipitation event. In addition, the CH TRU containers are stored on facility pallets, containment pallets, or standard drum pallets, which elevate the CH TRU mixed waste containers at least 6 in. (15 cm) off the floor, or in Contact-Handled or Remote-Handled Packages, so that any firewater released in the building will not pool around containers. Within the RH Bay, Cask Unloading Room, Transfer Cell, and Facility Cask Loading Room, waste containers are stored in casks or Shielded Inserts and protected from any potential run on. Any firewater released in the building will not pool around the waste containers as they are stored in casks, or Shielded Inserts. Within the Hot Cell, there is no source of water during operations. However, control of run-on is provided by the Lower Hot Cell, which lies below a sloped floor surrounded by a grating and canister sleeves in the Hot Cell above.

In the Parking Area Unit, the containers of TRU mixed waste are always in Contact-Handled or Remote-Handled Packages which protect them from precipitation and run on. Therefore, the WIPP container storage units will comply with the requirements of 20.4.1.500 NMAC (incorporating 40 CFR §264.175(b)(4)).

In the Overpack Unit, the containers of TRU mixed waste are always in closed concrete overpacks on a concrete/berm pad which protect them from precipitation and run on. Therefore, the WIPP container storage unit will comply with the requirements of 20.4.1.500 NMAC (incorporating 40 CFR §264.175(b)(4)).

Table A1-2
Waste Handling Equipment Capacities

CAPACITIES FOR EQUIPMENT	
CH Bay overhead bridge crane	12,000 lbs.
Surface forklifts	26,000 lbs. (CH Bay forklift) 70,000 lbs. (TRUPACT-III Handler forklift) 46,100 lbs. (concrete overpack forklift)
Facility Pallet	25,000 lbs.
Adjustable center-of-gravity lift fixture	10,000 lbs.
Facility Transfer Vehicle	30,000 lbs.
Yard Transfer Vehicle	60,000 lbs.
MAXIMUM GROSS WEIGHTS OF CONTAINERS	
Seven-pack of 55-gallon drums	7,000 lbs.
Four-pack of 85-gallon drums	4,500 lbs.
Three-pack of 100-gallon drums	3,000 lbs.
Ten-drum overpack	6,700 lbs.
Standard waste box	4,000 lbs.
Standard large box 2	10,500 lbs.
Shielded container	2,260 lbs.
Three-pack of shielded containers	7,000 lbs.
Concrete overpack with lid	46,100 lbs.
MAXIMUM NET EMPTY WEIGHTS OF EQUIPMENT	
TRUPACT-II	13,140 lbs.
HalfPACT	10,500 lbs.
TRUPACT-III	43,600 lbs.
Adjustable center of gravity lift fixture	2,500 lbs.
Facility pallet	4,120 lbs.
Concrete overpack with lid	32,100 lbs.

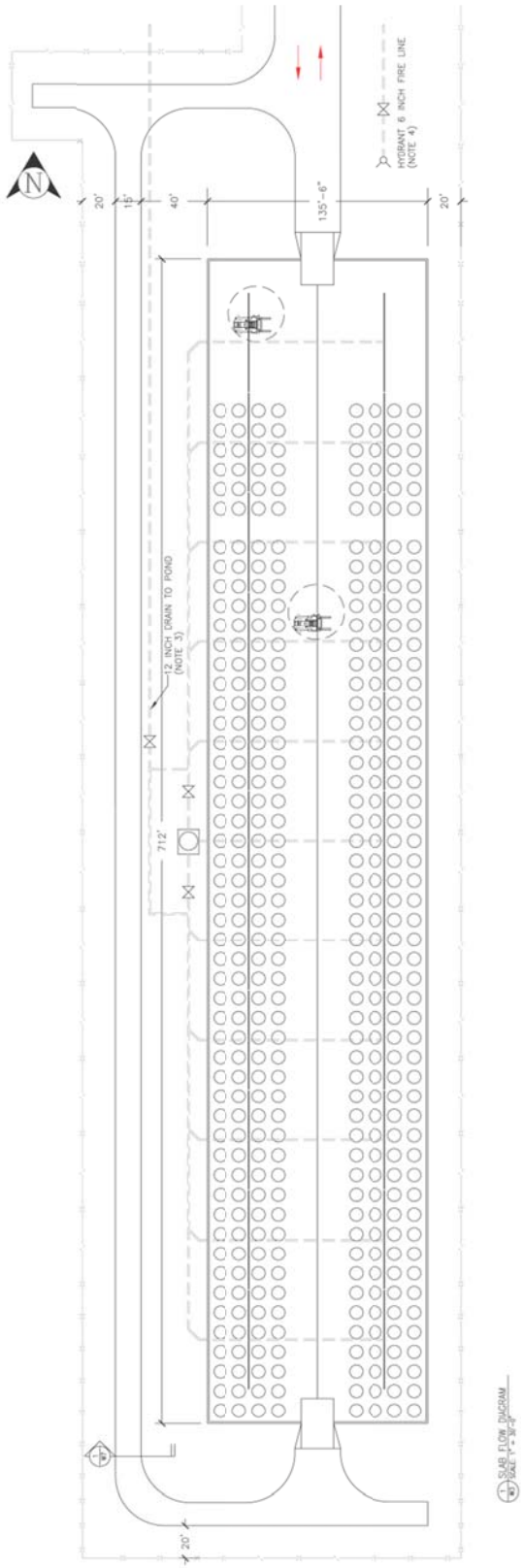

Figure A1-38
Concrete Overpack Container Storage Unit

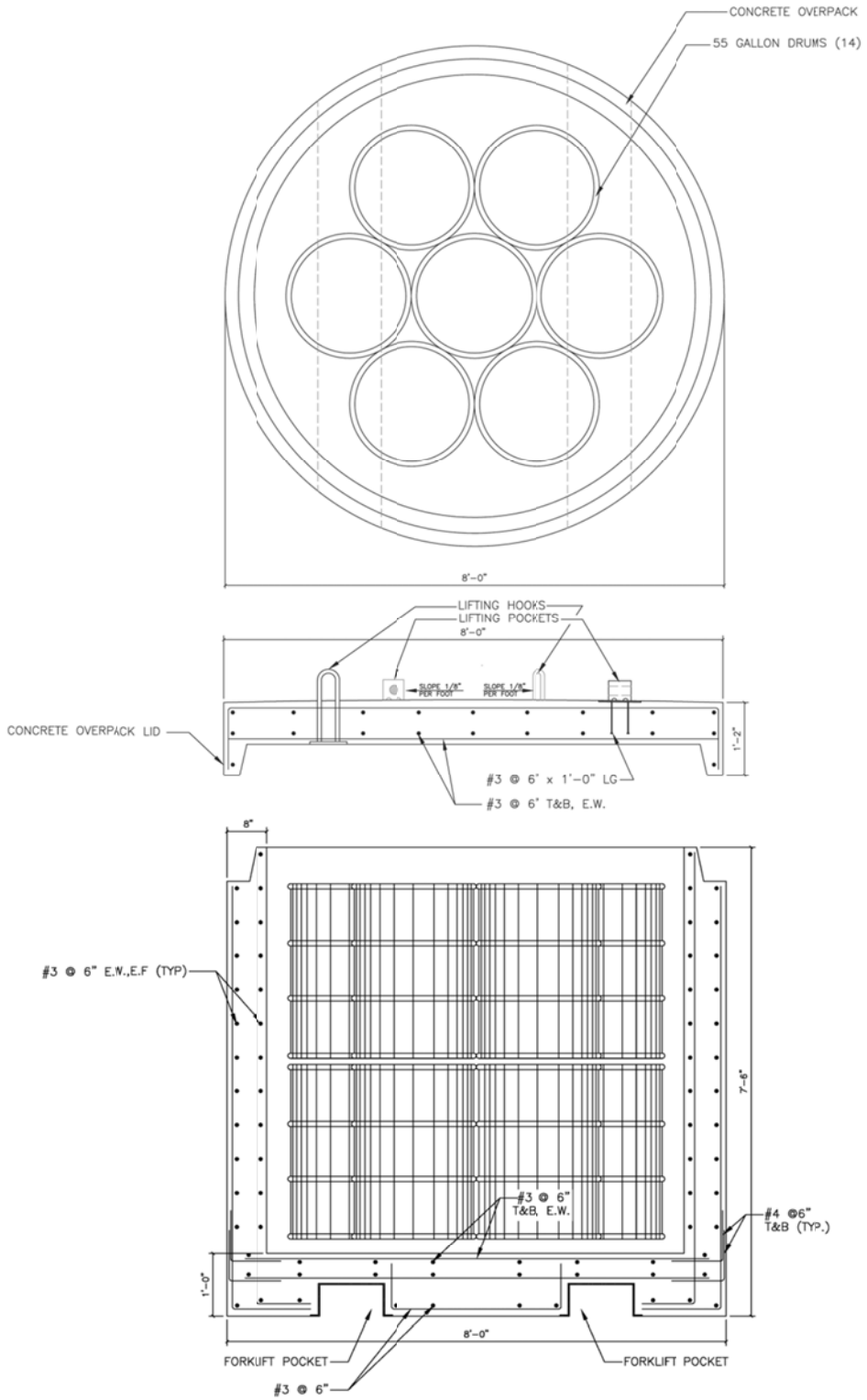

Figure A1-39
Typical Concrete Overpack

ATTACHMENT A2

GEOLOGIC REPOSITORY

A2-2b Geologic Repository Process Description

CH TRU Mixed Waste Emplacement

CH TRU mixed waste containers and shielded containers will arrive by tractor-trailer at the WIPP facility in sealed shipping containers. Prior to unloading the packages from the trailer, they will undergo security and radiological checks and shipping documentation reviews. The trailers carrying the shipping containers will be stored temporarily at the Parking Area Container Storage Unit (Parking Area Unit). A forklift will remove the Contact Handled Packages from the transport trailers and a forklift or Yard Transfer Vehicle will transport them into the Waste Handling Building Container Storage Unit for unloading of the waste containers. Each TRUPACT-II may hold up to two 7-packs, two 4-packs, two 3-packs, two SWBs, or one TDOP. Each HalfPACT may hold up to seven 55-gal (208 L) drums, one SWB, one three-pack of shielded containers or four 85-gal (322 L) drums. Each TRUPACT-III will hold one SLB2. An overhead bridge crane or Facility Transfer Vehicle with transfer table will be used to remove the waste containers from the Contact Handled Packaging and place them onto either a facility or containment pallet for downloading to the underground, or into a concrete overpack for storage in the Concrete Overpack Container Storage Unit (**Overpack Unit**). If the waste containers are placed onto a facility pallet, each stack of waste containers will be secured prior to transport underground (see Figure A2-3). Each facility pallet has two recessed pockets to accommodate two sets of 7-packs, two sets of 3-packs, two sets of 4-packs, two SWBs stacked two-high, two TDOPs, or one SLB2. ~~Each stack of waste containers will be secured prior to transport underground (see Figure A2-3).~~ A forklift or the facility transfer vehicle will transport the loaded facility pallet to the conveyance loading room adjacent to the Waste Shaft. The facility transfer vehicle will be driven onto the waste shaft conveyance deck, where the loaded facility pallet will be transferred to the waste shaft conveyance, and the facility transfer vehicle will be backed off. Containers of CH TRU mixed waste (55-gal (208 L) drums, SWBs, 85-gal (322 L) drums, 100-gal (379 L) drums, and TDOPs) or shielded containers can be handled individually, if needed, using the forklift and lifting attachments (i.e., drum handlers, parrot beaks).

The waste shaft conveyance will lower the loaded facility pallet to the underground. At the waste shaft station, the CH TRU underground transporter will back up to the waste shaft conveyance, and the facility pallet will be transferred from the waste shaft conveyance onto the transporter (see Figure A2-6). The transporter will then move the facility pallet to the appropriate Underground HWDU for emplacement. The underground waste transporter is equipped with a fire suppression system, rupture-resistant diesel fuel tanks, and reinforced fuel lines to minimize the potential for a fire involving the fuel system.

A forklift in the HWDU near the waste stack will be used to remove the waste containers from the facility pallets and to place them in the waste stack using a push-pull attachment or, in the case of an SLB2, the SLB2 will be lifted from the facility pallet and placed directly on the floor of the emplacement room. The waste will be emplaced room by room in Panels 1 through 8. Each panel will be closed off when filled. If a waste container is damaged during the Disposal Phase, it will be immediately overpacked or repaired. CH TRU mixed waste containers will be continuously vented. The filter vents will allow aspiration, preventing internal pressurization of the container and minimizing the buildup of flammable gas concentrations.

Once a waste panel is mined and any initial ground control established, flow regulators will be constructed to assure adequate control over ventilation during waste emplacement activities. The first room to be filled with waste will be Room 7, which is the one that is farthest from the main access ways. A ventilation control point will be established for Room 7 just outside the exhaust side of Room 6. This ventilation control point will consist of a bulkhead with a ventilation regulator. When RH TRU mixed waste canister emplacement is completed in a room, CH TRU mixed waste emplacement can begin in that room. Stacking of CH waste will begin at the ventilation control point and proceed down the access drift, through the room and up the intake access drift until the entrance of Room 6 is reached. At that point, a brattice cloth and chain link barricade and, if necessary, bulkheads will be emplaced. This process will be repeated for Room 6, and so on until Room 1 is filled. At that point, the panel closure system will be constructed.

The emplacement of CH TRU mixed waste into the HWDUs will typically be in the order received and unloaded from the Contact Handled Packaging. There is no specification for the amount of space to be maintained between the waste containers themselves, or between the waste containers and the walls. Containers will be stacked in the best manner to provide stability for the stack (which is up to three containers high) and to make best use of available space. It is anticipated that the space between the wall and the container could be from 8 to 18 in. (20 to 46 cm). This space is a function of disposal room wall irregularities, container type, and sequence of emplacement. Bags of backfill will occupy some of this space. Space is required over the stacks of containers to assure adequate ventilation for waste handling operations. A minimum of 16 in. (41 cm) was specified in the Final Design Validation Report (Appendix D1, Chapter 12 of the WIPP RCRA Part B Permit Application (DOE, 1997)) to maintain air flow. Typically, the space above a stack of containers will be 36 to 48 in. (90 to 122 cm). However 18 in. (0.45 m) will contain backfill material consisting of bags of Magnesium Oxide (MgO). Figure A2-8 shows a typical container configuration, although this figure does not mix containers on any row. Such mixing, while inefficient, will be allowed to assure timely movement of waste into the underground. No aisle space will be maintained for personnel access to emplaced waste containers. No roof maintenance behind stacks of waste is planned.

The anticipated schedule for the filling of each of the Underground HWDUs known as Panels 1 through 8 is shown in Permit Attachment G, Table G-1. Panel closure in accordance with the Closure Plan in Permit Attachment G and Permit Attachment G1 is estimated to require an additional 150 days.

When the waste containers are placed into concrete overpacks for surface storage, the following basic operations will be carried out. The TRU mixed waste storage process begins with WIPP Operations transporting an empty concrete overpack into the WHB using a forklift and positioning it in front of the TRUDOCK. Next, Operations will remove the overpack lid from the empty overpack and set it aside on the designated stand. TRU mixed waste containers are removed from the Contact Handled Packaging on the TRUDOCK. As the waste is removed from the Contact Handled Packaging, the payload containers will be inspected, restarting the annual inspection requirement. The waste will be lowered into the overpack using the Adjustable Center of Gravity Lift Fixture. The lid is then placed back on the overpack. This provides the secondary containment for the TRU mixed waste. Using a forklift, Operations will then transport the overpack containing the TRU mixed waste outside of the airlocks. An all-terrain forklift will then transport the overpack onto the storage pad (Overpack Unit).

When it is time to emplace the TRU mixed waste into the WIPP underground, Operations will retrieve the overpack containing the TRU mixed waste from the Overpack Unit and move it

outside the WHB using the all-terrain forklift. The overpack is then carried into the WHB using the electric forklift and placed on the TRUDOCK. The overpack lid is removed and radiological surveys are performed as required. The TRU mixed waste is removed from the overpack, placed on a facility pallet, and readied for emplacement in the WIPP underground. The empty overpack is ready to receive other TRU mixed waste for temporary storage or it can be moved out of the WHB and staged for future use.

Figure A2-12 is a flow diagram of the CH TRU mixed waste handling process.

Table A2-1
CH TRU Mixed Waste Handling Equipment Capacities

Capacities for Equipment	
Facility Pallet	25,000 lbs.
Facility Transfer Vehicle	26,000 lbs.
Underground transporter	28,000 lbs.
Underground forklift	12,000 lbs.
Concrete overpack forklift	46,1000 lbs.
Maximum Gross Weights of Containers	
Seven-pack of 55-gallon drums	7,000 lbs.
Four-pack of 85-gallon drums	4,500 lbs.
Three-pack of 100-gallon drums	3,000 lbs.
Ten-drum overpack	6,700 lbs.
Standard waste box	4,000 lbs.
Standard large box 2	10,500 lbs.
Shielded container	2,260 lbs.
Three-pack of shielded containers	7,000 lbs.
Concrete overpack with lid	46,100 lbs.
Maximum Net Empty Weights of Equipment	
TRUPACT-II	13,140 lbs.
HalfPACT	10,500 lbs.
TRUPACT-III	43,600 lbs.
Facility pallet	4,120 lbs.
Concrete overpack with lid	32,100 lbs.

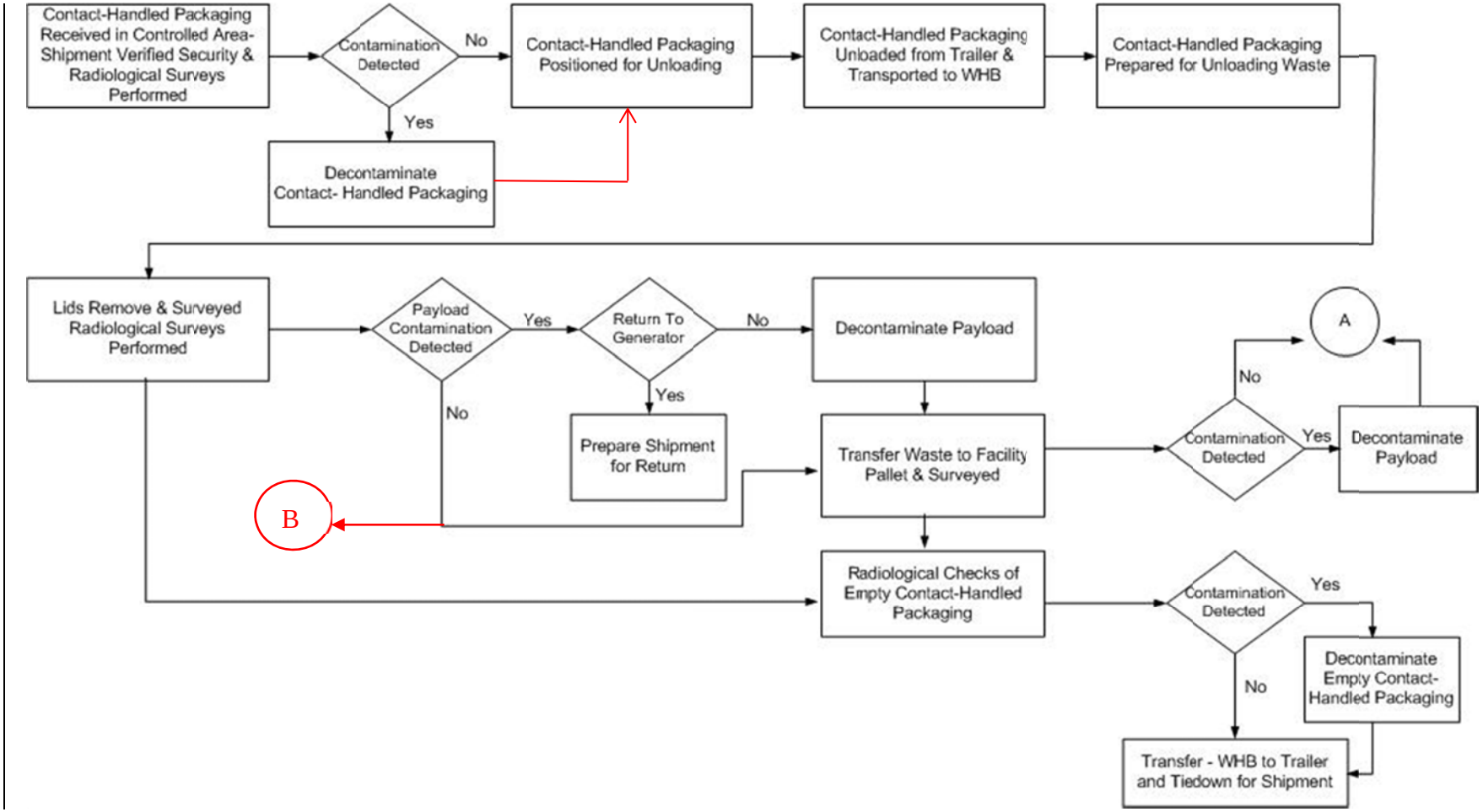

Figure A2-12
WIPP Facility Surface and Underground CH Transuranic Mixed Waste Process Flow Diagram

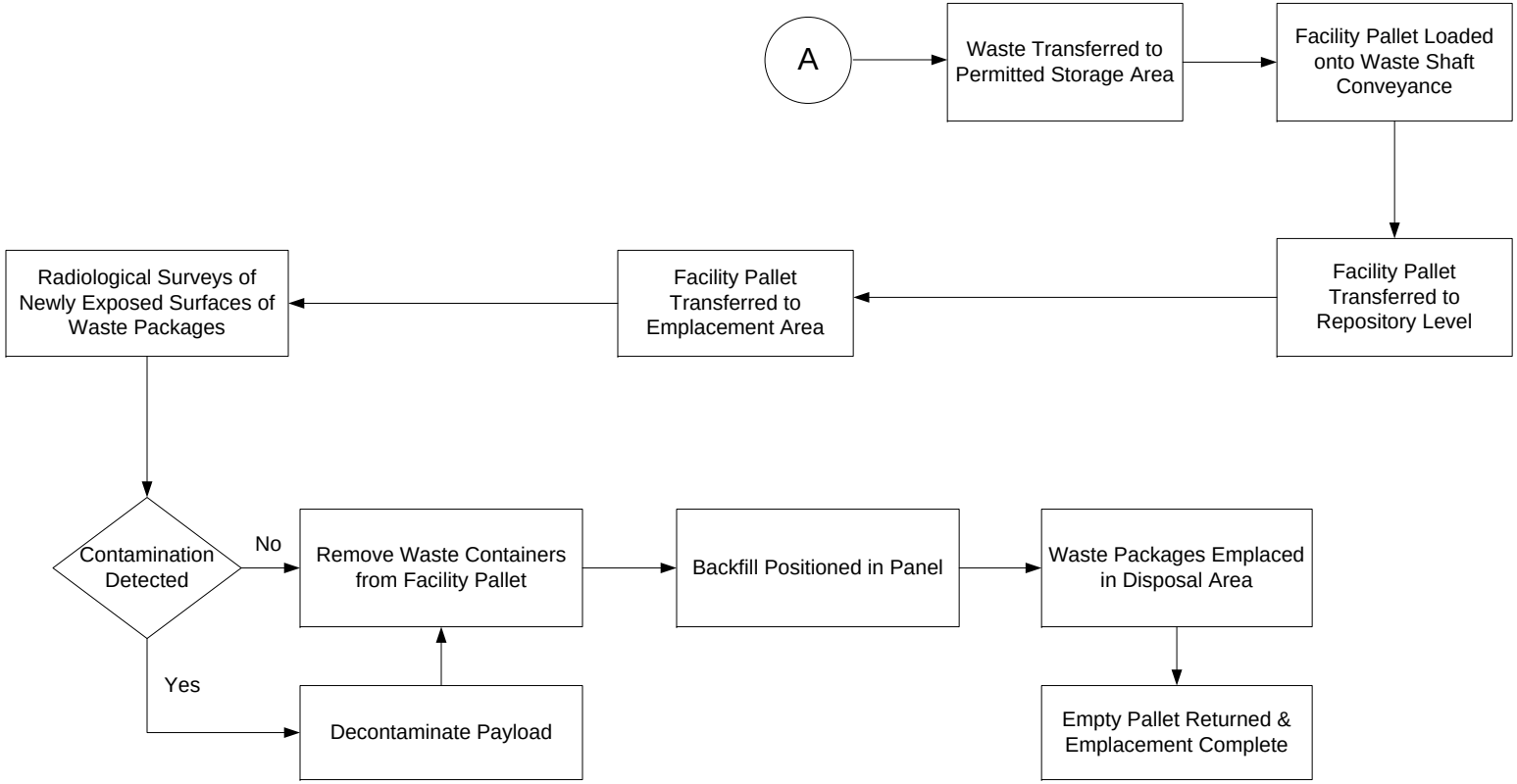

Figure A2-12
WIPP Facility Surface and Underground CH Transuranic Mixed Waste Process Flow Diagram (Continuation A~~ed~~)

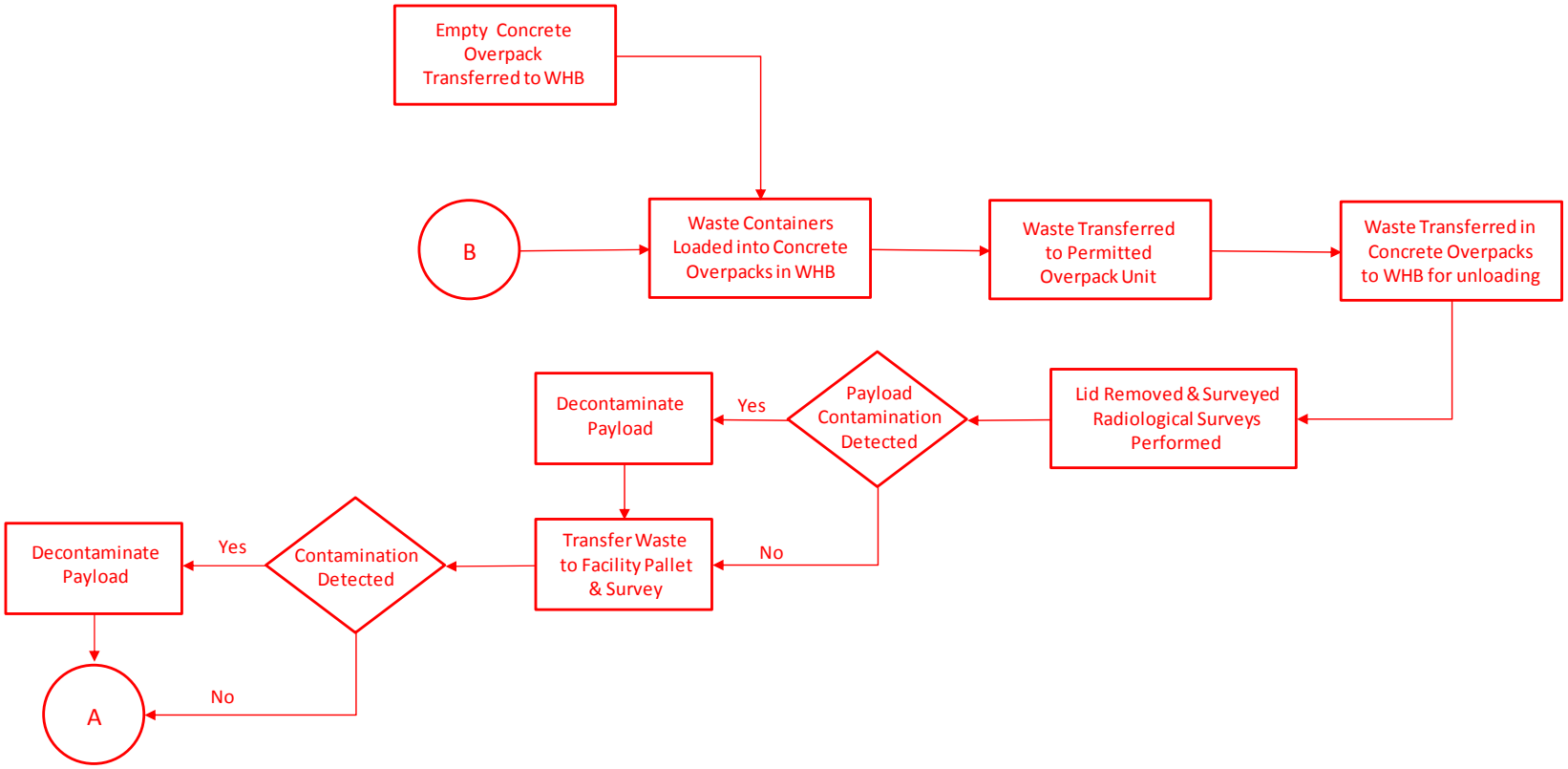

Figure A2-12
WIPP Facility Surface and Underground CH Transuranic Mixed Waste Process Flow Diagram (Continuation B)

ATTACHMENT A4

TRAFFIC PATTERNS

TABLE OF CONTENTS

A4-1 Traffic Information and Traffic Patterns .....
A4-2 Facility Access and Traffic .....
A4-3 Waste Handling Building Traffic .....
A4-4 Underground Traffic .....
A4-5 Concrete Overpack Container Storage Unit Traffic.....

LIST OF TABLES

Table	Title
Table A4-1	Waste Isolation Pilot Plant Site Design Designation Traffic Parameters [a]

LIST OF FIGURES

Figure	Title
Figure A4-1	General Location of the WIPP Facility
Figure A4-2	WIPP Traffic Flow Diagram
Figure A4-3	Waste Transport Routes in Waste Handling Building - Container Storage Unit
Figure A4-3a	Typical Transport Route for TRUPACT-II and Standard Large Box 2
Figure A4-3b	Typical Transport Route for TRUPACT-II and Standard Large Box 2 in Room 108
Figure A4-4	Typical Underground Transport Route Using E-140
Figure A4-4a	Typical Underground Transport Route Using W-30
Figure A4-5	RH Bay Waste Transport Routes
Figure A4-6	RH Bay Cask Loading Room Waste Transport Route
Figure A4-7	RH Bay Canister Transfer Cell Waste Transport Route
Figure A4-8	Waste Transport Routes in WHB – Concrete Overpack Loading and Unloading
Figure A4-9	Waste Transport Routes Designated for the Concrete Overpack Container Storage Unit

ATTACHMENT A4

TRAFFIC PATTERN

A4-5 Concrete Overpack Container Storage Unit Traffic and Process Summary

The basic traffic flow and operations for storage of waste containers in the Concrete Overpack Container Storage Unit (**Overpack Unit**) include the following. The TRU mixed waste storage process begins with WIPP Operations transporting an empty concrete overpack into the WHB using a forklift and positioning it in front of the TRUDOCK. Next, Operations will remove the overpack lid from the empty overpack and set it aside on the designated stand. TRU mixed waste containers are removed from the Contact-Handled Packaging on the TRUDOCK. As the waste is removed from the Contact-Handled Packaging, the payload containers will be inspected, restarting the annual inspection requirement. The waste will be lowered into the overpack using the Adjustable Center of Gravity Lift Fixture. The lid is then placed back on the overpack. This provides the secondary containment for the TRU mixed waste. Using a forklift, Operations then transports the overpack containing the TRU mixed waste outside of the airlocks. An all-terrain forklift will then transport the overpack onto the storage pad (Overpack Unit).

When it is time to emplace the TRU mixed waste into the WIPP underground, Operations will retrieve the overpack containing the TRU mixed waste from the Overpack Unit and move it outside the WHB using the all-terrain forklift. The overpack is carried into the WHB using the electric forklift and placed on the TRUDOCK. The overpack lid is removed and radiological surveys are performed as required. The TRU mixed waste is removed from the overpack and placed on a facility pallet and readied for emplacement in the WIPP underground. The empty overpack is ready to receive other TRU mixed waste for temporary storage or can be moved out of the WHB and staged for future use.

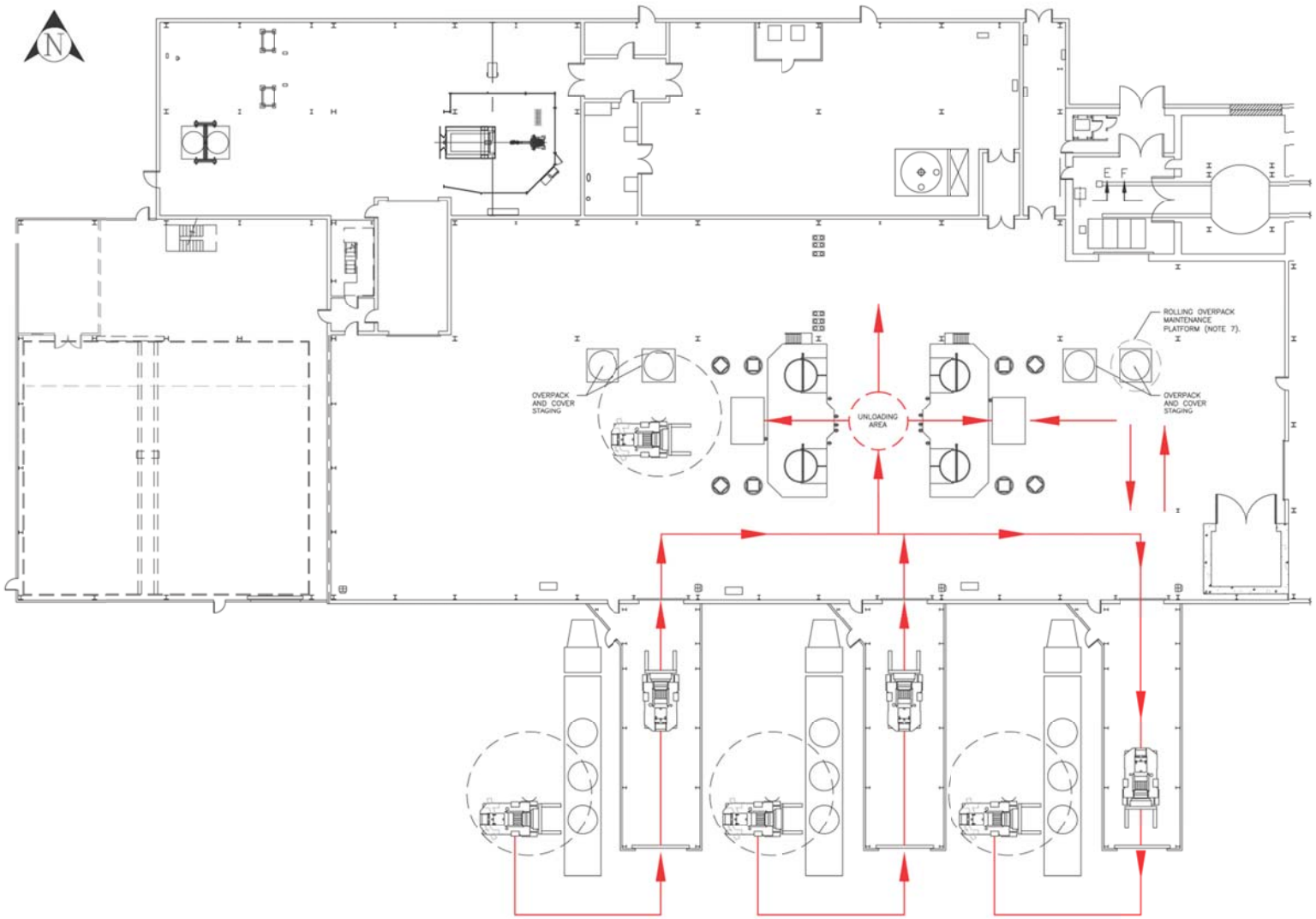

Figure A4-8
Waste Transport Routes in WHB – Concrete Overpack Loading and Unloading

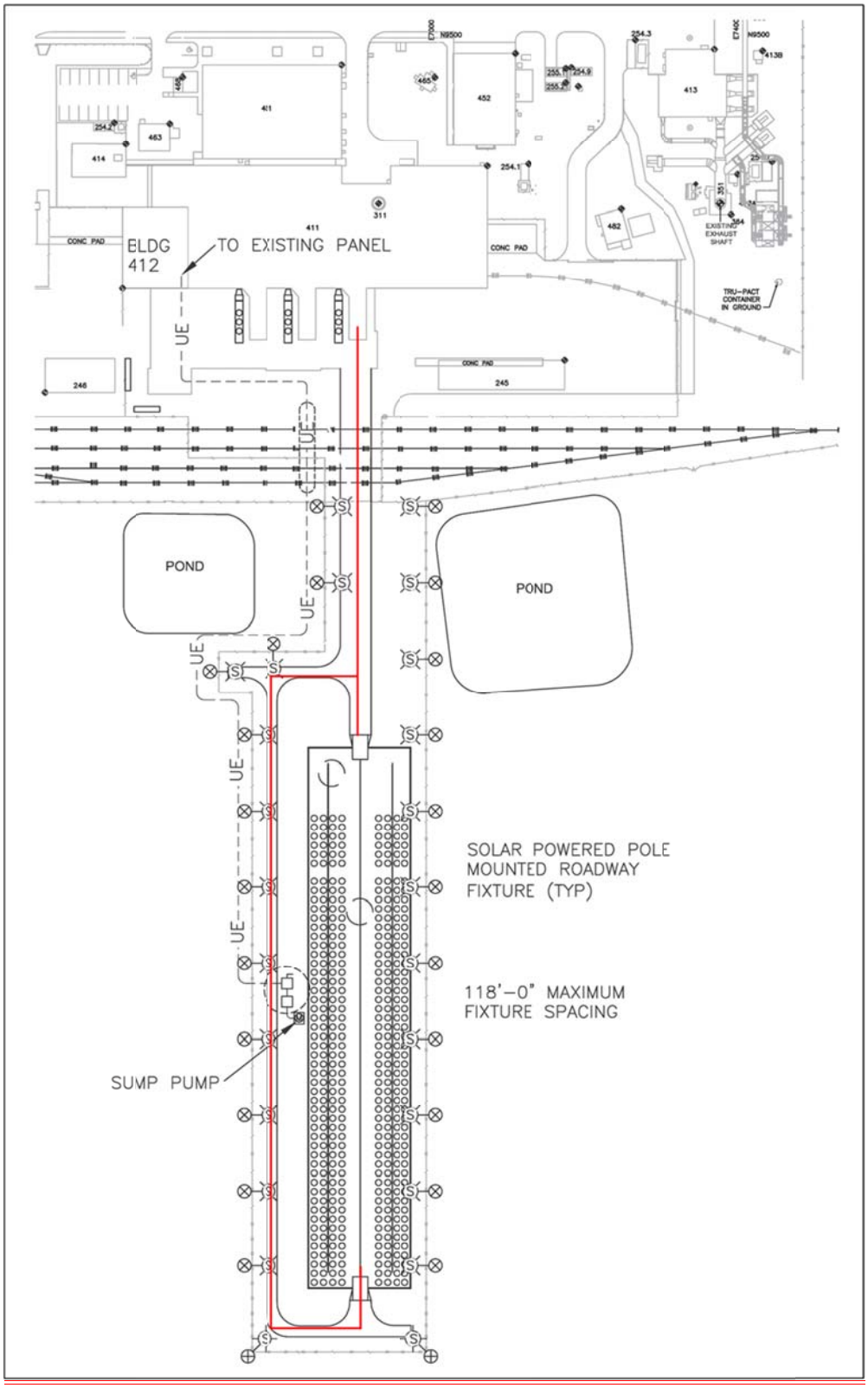

Figure A4-9
Waste Transport Routes Designated for the Concrete Overpack Container Storage Unit

ATTACHMENT B

HAZARDOUS WASTE PERMIT APPLICATION PART A

TABLE OF CONTENTS

PART A - HAZARDOUS WASTE PERMIT APPLICATION .....

RCRA PART A APPLICATION CERTIFICATION.....

APPENDIX B1 OTHER ENVIRONMENTAL PERMITS .....

APPENDIX B2 MAPS .....
- Figure B2-1 General Location of the WIPP Facility .....
- Figure B2-2 Planimetric Map - WIPP Facility Boundaries .....
- Figure B2-2a Legend to Figure B2-2 .....
- Figure B2-3 Topographic Map.....

APPENDIX B3 FACILITIES .....
- Figure B3-1 Spatial View of the WIPP Facility.....
- Figure B3-2 Repository Horizon .....
- Figure B3-3 Waste Handling Building - CH TRU Mixed Waste Container Storage and Surge Areas.....
- Figure B3-4 Parking Area-Container Storage and Surge Areas.....
- Figure B3-5 Concrete Overpack Container Storage Unit .....

APPENDIX B4 PHOTOGRAPHS.....
- Figure B4-1 Aerial Photograph of the Waste Isolation Pilot Plant .....
- Figure B4-2 Underground - Panel One - Waste Disposal Room.....
- Figure B4-3 Aerial Photograph of the Waste Handling Building.....
- Figure B4-4 TRUDOCKs in CH Bay of the Waste Handling Building.....
- Figure B4-5 NE Corner of CH Bay of the Waste Handling Building .....
- Figure B4-6 Westward View of CH Bay of the Waste Handling Building .....
- Figure B4-7 Waste Shaft Conveyance - Loading Facility Pallet with CH Waste, Waste Handling Building.....
- Figure B4-8 RH Bay (Photo Taken July 2000) .....
- Figure B4-9 Cask Unloading Room and Bridge Crane.....
- Figure B4-10 Hot Cell.....
- Figure B4-11 Transfer Cell .....
- Figure B4-12 Facility Cask Loading Room and Facility Cask Rotating Device .....

7. PROCESS—CODES AND DESIGN CAPACITIES (continued)

The Waste Isolation Pilot Plant (WIPP) geologic repository is defined as a “miscellaneous unit” under 40 CFR §260.10. “Miscellaneous unit” means a hazardous waste management unit where hazardous waste is treated, stored, or disposed of and that is not a container, tank, surface impoundment, waste pile, land treatment unit, landfill, incinerator, containment building, boiler, industrial furnace, or underground injection well with appropriate technical standards under 40 CFR Part 146, corrective action management unit, or unit eligible for research, development, and demonstration permit under 40 CFR §270.65. The WIPP is a geologic repository designed for the disposal of defense-generated transuranic (TRU) waste. Some of the TRU wastes disposed of at the WIPP contain hazardous wastes as co-contaminants. More than half the waste to be disposed of at the WIPP also meets the definition of debris waste. The debris categories include manufactured goods, biological materials, and naturally occurring geological materials. Approximately 120,000 cubic meters (m^3) of the 175,600 m^3 of WIPP wastes is categorized as debris waste. The geologic repository has been divided into ten discrete hazardous waste management units (HWMU) which are being permitted under 40 CFR Part 264, Subpart X.

During the Disposal Phase of the facility, which is expected to last 25 years, the total amount of waste received from off-site generators and any derived waste will be limited to 175,600 m^3 of TRU waste of which up to 7,080 m^3 may be remote-handled (RH) TRU mixed waste. For purposes of this application, all TRU waste is managed as though it were mixed.

The process design capacity for the miscellaneous unit (composed of ten underground HWMUs in the geologic repository) shown in Section 7 B, is for the maximum amount of waste that may be received from off-site generators plus the maximum expected amount of derived wastes that may be generated at the WIPP facility. In addition, ~~two~~ three HWMUs have been designated as container storage units (S01) in Section 7 B. One is inside the Waste Handling Building (WHB) and consists of the contact-handled (CH) bay, waste shaft conveyance loading room, waste shaft conveyance entry room, RH bay, cask unloading room, hot cell, transfer cell, and facility cask loading room. This HWMU will be used for waste receipt, handling, and storage (including storage of derived waste) prior to emplacement in the underground geologic repository. No treatment or disposal will occur in this S01 HWMU. The capacity of this S01 unit for storage is 194.1 m^3, based on 36 ten-drum overpacks on 18 facility pallets, four CH Packages at the TRUDOCKs, one standard waste box of derived waste, two loaded casks and one 55-gallon drum of derived waste in the RH Bay, one loaded cask in the Cask Unloading Room, 13 55-gallon drums in the Hot Cell, one canister in the Transfer Cell and one canister in the Facility Cask Unloading Room. The second S01 HWMU is the parking area outside the WHB where the Contact- and Remote-Handled Package trailers and the road cask trailers will be parked awaiting waste handling operations. The capacity of this unit is 50 Contact-Handled Packages and twelve Remote-Handled Packages with a combined volume of 242 m^3. The third S01 HWMU is the Concrete Overpack Container Storage Unit south of the rail siding where closed concrete overpacks will be stored awaiting waste handling operations. The capacity of this S01 unit is 1,821 m^3, based on one TDOP stored in each of 408 concrete overpacks. The HWMUs are shown in Figures B3-2, B3-3, ~~and~~ B3-4, and B3-5.

During the ten year period of the permit, up to 148,500 m^3 of CH TRU mixed waste could be emplaced in Panels 1 to 8 and up to 2,635 m^3 of RH TRU mixed waste could be emplaced in Panels 4 to 8. Panels 9 and 10 will be constructed under the initial term of this permit. These latter areas will not receive waste for disposal under this permit.

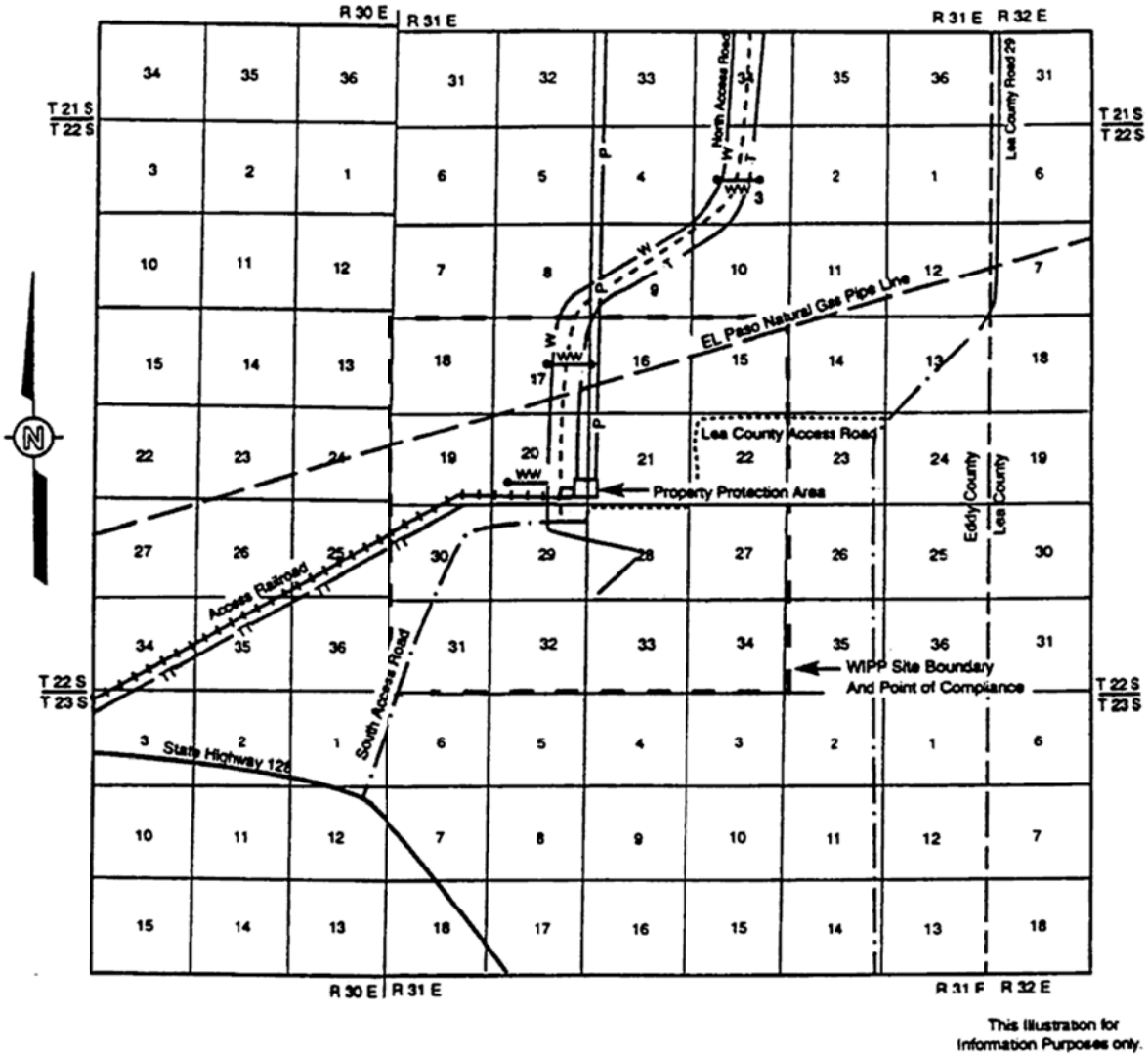
R 30 E
R 31 E
R 31 E
R 32 E
T 21 S
T 22 S
T 22 S
T 23 S
North Access Road
Lea County Road 29
El Paso Natural Gas Pipe Line
Lea County Access Road
Property Protection Area
Eddy County
Lea County
Access Railroad
South Access Road
State Highway 128
WIPP Site Boundary
And Point of Compliance
This Illustration for
Information Purposes only.

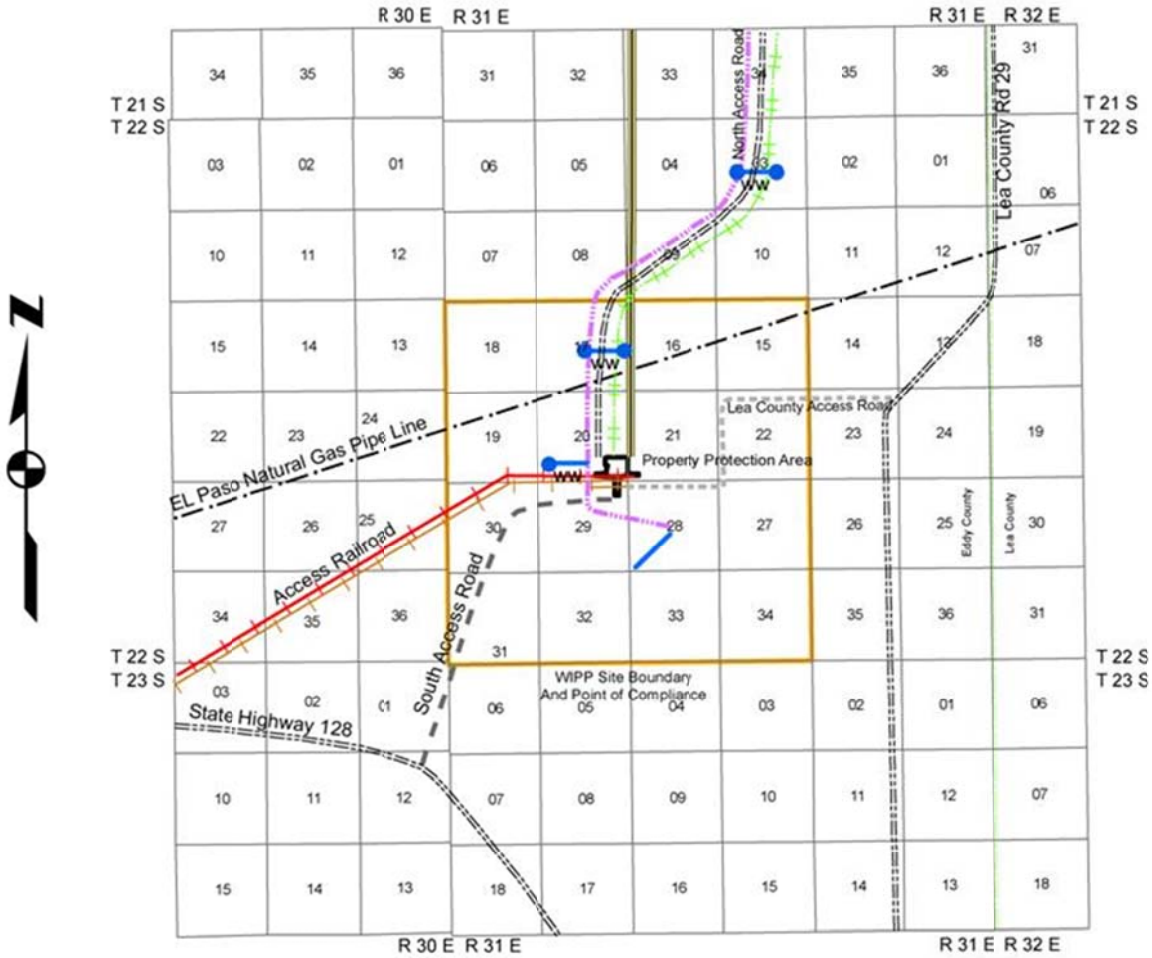

Figure B2-2
Planimetric Map - WIPP Facility Boundaries

LEGEND

— — · WIPP Site Boundary 10,240 Acres.

— W — U.S. DOE Right of Way Number NM-53809. For Waterline, 50 Feet Wide. The DOE had Agreed with the City of Carlsbad to Allow the Individuals to Tap this Line Located within the North Access Road Right of Way.

—WW— Stock Water Tanks and Tap Lines Connected to the Main WIPP Waterline.

—P— Southwestern Public Service Company Right of Way Number NM-43203 for Power 60 Feet Wide.

—T— General Telephone of the Southwest Right of Way for Telephone Line, 30 Feet Wide, Located within the North access Road Right of Way.

—TT— General Telephone of the Southwest Right of Way Number NM-60174 for Telephone Line, 30 Feet Wide, Located within the Railroad Right of Way.

····· U.S. DOE Right of Way Number NM-55675 for North Access Road, 170 Feet Wide.

— — El Paso Natural Gas company Right of Way for Gas Pipeline, 30 Feet Wide in Section 16, 50 Feet Wide Elsewhere.

+ + + + U.S. DOE Right of Way Number NM-55699 for Access Railroad, 150 Feet Wide.

— · — U.S. DOE Right of Way for Access Roads Includes Right of Way Number NM-123703 for the South Access Road which is 140 Feet Wide.

NOTES

1. The Property Protection Area is a fenced area of approximately 35 acres. It contains all surface facilities with the exception of salt storage piles, parking lot, landfill and waste water stabilization lagoons.

2. Zone II overlies the maximum extent of the Area available for underground development.

3. WIPP site boundary (WSB) provides a one mile buffer area around the area available for underground development.

Legend

WIPP Site Boundary 10,240 Acres.

U.S. DOE Right of Way Number NM-53809. For Waterline, 50 Feet Wide. The DOE had Agreed with the City of Carlsbad to Allow the Individuals to Tap this Line Located within the North Access Road Right of Way.

Tap Lines Connected to the Main WIPP Waterline.

Stock Water Tanks.

Southwestern Public Service Company Right of Way Number NM-43203 for Power 60 Feet Wide.

General Telephone of the Southwest Right of Way for Telephone Line, 30 Feet Wide, Located within the North Access Road Right of Way.

General Telephone of the Southwest Right of Way Number NM-60174 for Telephone Line, 30 Feet Wide, Located within the Railroad Right of Way.

U.S. DOE Right of Way Number NM-55675 for North Access Road, 170 Feet Wide.

U.S. DOE Right of Way for Access Roads Includes Right of Way Number NM-123703 for the South Access Road, 140 Feet Wide.

El Paso Natural Gas Company Right of Way for Gas Pipeline, 30 Feet Wide in Section 16, 50 Feet Wide Elsewhere.

U.S. DOE Right of Way Number NM-55699 for Access Railroad, 150 Feet Wide.

NOTES

1. The Property Protection Area is a fenced area of approximately 40 acres. It contains all surface facilities with the exception of salt storage piles, parking lot, landfill and waste water stabilization lagoons.

2. Zone II overlies the maximum extent of the Area available for underground development.

3. WIPP Site Boundary (WSB) provides a one mile buffer area around the area available for underground development.

Figure B2-2a
Legend to Figure B2-2

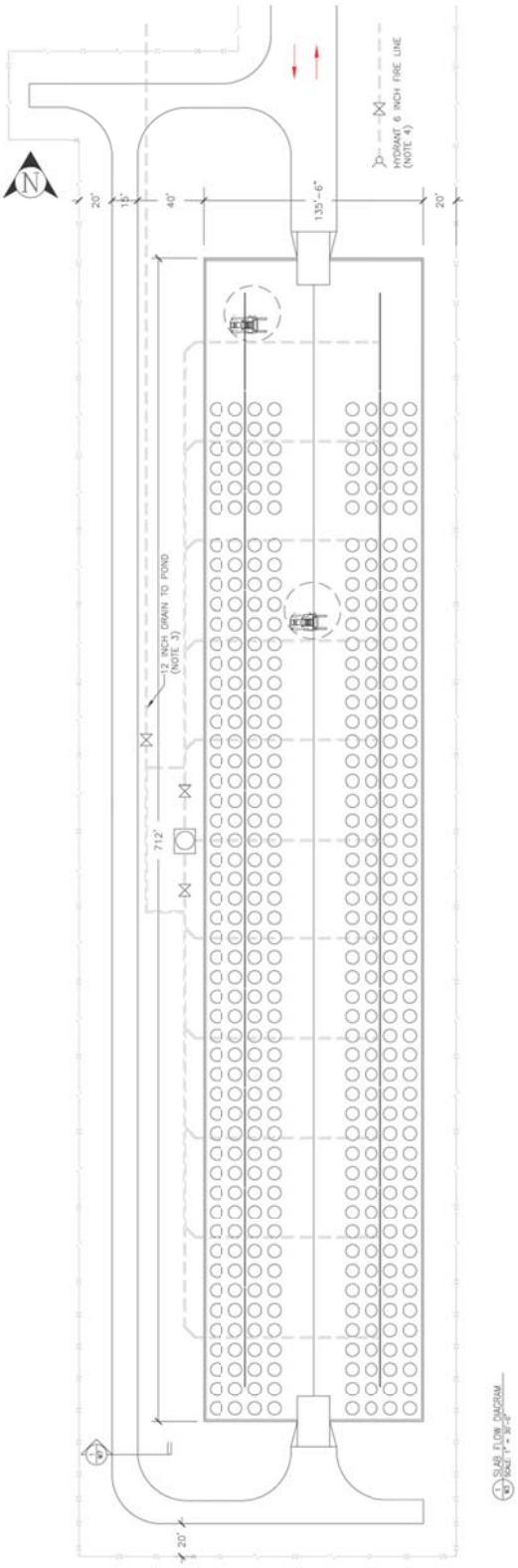

Figure B3-5
Concrete Overpack Container Storage Unit

ATTACHMENT D

RCRA CONTINGENCY PLAN

D-1e Description of Surface Hazardous Waste Management Units

The WHB is the surface facility where waste handling activities will take place. The WHB has a total area of approximately 84,000 square feet (ft^2) (7,804 square meters [m^2]) of which 49,710 ft^2 (4,618 m^2) are designated as the WHB Unit for TRU mixed waste management. Within the WHB Unit, 32,307 ft^2 (3,001 m^2) are designated for the waste handling and container storage of CH TRU mixed waste and 17,403 ft^2 (1,617 m^2) are designated for the handling and storage of RH TRU mixed waste. ~~These areas are being permitted as container storage units.~~ The concrete floors within the WHB Unit are sealed with an impermeable coating that has excellent resistance to the chemicals in TRU mixed waste and, consequently, provide secondary containment for TRU mixed waste.

~~In addition, a~~The Parking Area Unit south of the WHB is~~will be~~ used for storage of waste in sealed shipping containers awaiting unloading. ~~This area is also being permitted as a container storage unit.~~ The sealed shipping containers provide secondary containment in this hazardous waste management unit (**HWMU**).

The Concrete Overpack Container Storage Unit (**Overpack Unit**), south of the rail siding, will be used for storage of waste in closed concrete overpacks. This area is a container storage unit. The closed concrete overpacks provide secondary containment in this HWMU.

~~D-1f Off-Normal Events~~

~~Off-normal events could interrupt normal operations in the waste management process line Shipments of waste from the generator sites will be stopped in any event which results in an interruption to normal waste handling operations that exceeds three days.~~

ATTACHMENT E

INSPECTION SCHEDULE, PROCESS AND FORMS

E-1b(1) Container Inspection

Inspections will be conducted in the Parking Area Unit and the Concrete Overpack Container Storage Unit (**Overpack Unit**) at a frequency not less than once weekly when waste is present. These inspections are applicable to loaded Contact- Handled and Remote-Handled Packages or loaded concrete overpacks. The perimeter fence located at the lateral limit of the Parking Area Unit, coupled with personnel access restrictions into the WHB Unit, will provide the needed security. The perimeter fence and the southern border of the WHB shall mark the lateral limit of the Parking Area Unit. Radiologically controlled areas can be established temporarily with barricades. More permanent structures can be installed. The western boundary can be established with temporary barricades since this area is within the perimeter fence. Access to radiologically controlled areas will only be permitted to personnel who have completed General Employee Radiological Training (**GERT**), a program defined by the Permittees, or escorted by personnel who have completed GERT. This program ensures that personnel have adequate knowledge to understand radiological posting they may encounter at the WIPP site. The fence of the Radiologically Controlled Area, south from the WHB airlocks, was moved to provide more maneuvering space for the trucks delivering waste. Since TRU mixed waste to be stored in the Parking Area Unit and the Overpack Unit will either be in sealed Contact-Handled or Remote-Handled Packages or loaded concrete overpacks, there will be no additional requirements for engineered secondary containment systems. Inspections of the Contact-Handled and Remote-Handled Packages stored in the Parking Area Unit and inspections of the loaded concrete overpacks shall be conducted at a frequency no less than once weekly and will focus on the inventory and integrity of the shipping containers or loaded concrete overpacks and the spacing between trailers carrying the Contact-Handled or Remote-Handled Packages or loaded concrete overpacks. This spacing will be maintained at a minimum of four feet.

Container inspections will be included as part of the surface TRU mixed waste handling areas (i.e., Parking Area Unit, ~~and~~ the WHB Unit, and the Overpack Unit) inspections described in Tables E-1 and E-1a. These inspections will also include the Derived Waste Storage Areas of the WHB Unit. The Derived Waste Storage Areas will consist of containers of 55 or 85-gallon drums or SWBs for CH TRU mixed waste and 55-gallon drums for RH TRU mixed waste. A Satellite accumulation area (**SAA**) may be required in an area adjacent to the TRUDOCKs for CH TRU mixed waste. A SAA may also be required in the RH Bay and Hot Cell for RH TRU mixed waste. These SAAs will be set up on an as needed basis at or near the point of generation and the derived waste will be discarded into the active derived waste container. All SAAs will be inspected in accordance with 20.4.1.300 NMAC (incorporating 40 CFR §262.34).

Table E-1 (Continued)
Inspection Schedule/Procedures Notes

[a] Inspection may be accomplished as part of or in addition to regularly scheduled preventive maintenance inspections for each item or system. Certain structural systems of the WHB, Waste Hoist and Station A are also subject to inspection following severe natural events including earthquakes, tornados, and severe storms. Structural systems include columns, beams, girders, anchor bolts and concrete walls.

[b] Deterioration includes: obvious visible cracks, erosion, salt build-up, damage, corrosion, loose or missing parts, malfunctions, and structural deterioration.

[c] "Preoperational" signifies that inspections are required prior to the first use during a calendar day. For calendar days in which the equipment is not in use, no inspections are required. For an area this includes: area is clean and free of obstructions (for emergency equipment); adequate aisle space; emergency and communications equipment is readily available, properly located and sign-posted, visible, and operational. For equipment, this includes: checking fluid levels, pressures, valve and switch positions, battery charge levels, pressures, general cleanliness, and that all functional components and emergency equipment is present and operational.

[e] These weekly inspections apply to container storage areas when containers of waste are present for a week or more.

[g] In addition, the water tank levels are maintained by the CMR and level readouts are available at any time.

[h] This organization is responsible for obtaining licenses for radios and frequency assignments. They do periodic checks of frequencies and handle repairs which are performed by a vendor.

[i] Radios are not routinely "inspected." They are operated daily and many are used in day-to-day operations. They are used until they fail, at which time they are replaced and repaired. Radios are used routinely by Emergency Services, Security, Environmental Monitoring, and Facility Operations.

[j] Fire extinguisher inspection is paperless. Information is recorded into a database using barcodes. The database is then printed out.

[k] Surface CH TRU mixed waste handling areas include the Parking Area Unit, the WHB unit, the Overpack Unit, and unloading areas.

[l] No log forms are used for daily readings. However, readings that are out of tolerance are reported to the CMR and logged by CMR operator. Inspection includes daily functional checks of portable equipment.

[m] Mechanical Operability means that the equipment has been checked and is operating in accordance with site safety requirements (e.g. proper fluid levels and tire pressure; functioning lights, alarms, sirens, and power/battery units; and belts, cables, nuts/bolts, and gears in good condition), as appropriate.

[n] Required Equipment means that the equipment identified in Table D-6 is available and usable (i.e. not expired/depleted and works as designed).

[o] Mine pager phones in non-essential locations are not routinely "inspected". Many are used in day-to-day operations. They are used until they fail, at which time they are repaired. Mine pager phones are used routinely by Underground Operations.

* Positions are not considered RCRA positions (i.e., personnel do not manage TRU mixed waste).

ATTACHMENT G

CLOSURE PLAN

Introduction

This Permit Attachment contains the Closure Plan that describes the activities necessary to close the Waste Isolation Pilot Plant (**WIPP**) individual units and facility. Since the current plans for operations extend over several decades, the Permittees will periodically reapply for an operating permit in accordance with 20.4.1.900 NMAC (incorporating 40 CFR §270.10(h)). Consequently, this Closure Plan describes several types of closures. The first type is panel closure, which involves constructing closures in each of the underground hazardous waste disposal units (**HWDUs**) after they are filled. The second type is partial closure, which can be less than the entire facility and therefore less than an entire unit as described herein for the Waste Handling Building (**WHB**) Unit, ~~and~~ the Parking Area Unit (**PAU**), and the Concrete Overpack Container Storage Unit (**Overpack Unit**). The third type of closure is final facility closure at the end of the Disposal Phase, which will entail "clean" closure of all remaining surface storage units and construction of the four shaft seal systems. Finally, in the event a new permit is not issued prior to expiration of an existing permit, a modification to this Closure Plan will be sought to perform contingency closure. Contingency closure defers the final closure of waste management facilities such as the Waste Handling Building Container Storage Unit (**WHB Unit**), the Overpack Unit, the conveyances, the shafts, and the haulage ways because these will be needed to continue operations with non-mixed Transuranic (**TRU**) waste.

The hazardous waste management units (**HWMUs**) addressed in this Closure Plan include the aboveground HWMU in the WHB, the parking area HWMU, the Overpack Unit, and Panels 1 through 8, each consisting of seven rooms.

G-1 Closure Plan

This Closure Plan is prepared in accordance with the requirements of 20.4.1.500 NMAC (incorporating 40 CFR §264 Subparts G, I, and X), Closure and Post-Closure, Use and Management of Containers, and Miscellaneous Units. The WIPP underground HWDUs, including Panels 1 through 8 on Figure G-1, will be closed under this permit to meet the performance standards in 20.4.1.500 NMAC (incorporating 40 CFR §264.601). The WIPP surface facilities, including Waste Handling Building Container Storage Unit, ~~and~~ the Parking Area Container Storage Unit, and the Overpack Unit will be closed in accordance with 20.4.1.500 NMAC (incorporating 40 CFR §264.178). The Permittees may perform partial closure of the WHB, ~~and~~ PAU, and Overpack Unit HWMUs prior to final facility closure and certification. For final facility closure, this plan also includes closure of future waste disposal areas including Panels 9 and 10 and closure and sealing of the facility shafts in accordance with 20.4.1.500 NMAC (incorporating 40 CFR §264.601).

G-1a Closure Performance Standard

G-1a(1) Container Storage Units

Final or partial closure of the permitted container storage units (the Waste Handling Building Unit, ~~and~~ Parking Area Unit, and the Overpack Unit) will be accomplished by removing all waste and waste residues. Indication of waste contamination will be based, among other techniques, on the use of radiological surveys as described in Permit Attachment G3. Radiological surveys

use very sensitive radiation detection equipment to indicate if there has been a potential release of TRU mixed waste, including hazardous waste components, from a container. This allows the Permittees to indicate potential releases that are not detectable from visible evidence such as stains or discoloration. Visual inspection and operating records will also be used to identify areas where decontamination is necessary. Contaminated surfaces will be decontaminated until radioactivity is below free release limits[1]. Once surfaces are determined to be free of radioactive waste constituents, they will be tested for hazardous waste contamination. These surface decontamination activities will ensure the removal of waste residues to levels protective of human health and the environment. The facility is expected to require no decontamination at closure because any waste spilled or released during operations will be contained and removed immediately. Solid waste management units listed in Attachment K, Table K-4 will be subject to closure. In the event portions of these units which require decontamination cannot be decontaminated, these portions will be removed and the resultant wastes will be managed as appropriately.

G-1b Requirements

The Permit specifies a sequential process for the closure of individual HWMUs at the WIPP. Each underground HWDU will undergo panel closure when waste emplacement in that panel is complete. Following waste emplacement in each underground HWDU, construction-side ventilation will be terminated and waste-disposal-side ventilation will be established in the next underground HWDU to be used, and the underground HWDU containing the waste will be closed. The Permittees will notify the NMED of the closure of each of the underground HWDUs as they are sequentially filled on a HWDU-by-HWDU basis. The HWMUs in the WHB, ~~and in~~ the parking area, and in the Overpack Unit will be closed as part of final facility closure of the WIPP facility.

G-1c Maximum Waste Inventory

The WIPP will receive no more than 6.2 million ft^3 (175,564 m^3) of TRU mixed waste, which may include up to 250,000 ft^3 (7,079 m^3) of remote-handled (**RH**) TRU mixed waste. Excavations are mined as permitted when needed during operations to maintain a reserve of disposal areas. The amount of waste placed in each room is limited by structural and physical considerations of equipment and design. Waste volumes include waste received from off-site generator locations as well as derived waste from disposal and decontamination operations. The maximum volume of TRU mixed waste in a disposal panel is established in Permit Part 4, Table 4.1.1. For closure planning purposes, a maximum achievable volume of 685,100 ft^3 (19,400 m^3) of TRU mixed waste per panel is used. This equates to 662,150 ft^3 (18,750 m^3) of contact-handled (**CH**) TRU mixed waste and 22,950 ft^3 (650 m^3) of RH TRU mixed waste per panel.

The maximum extent of operations during the term of this permit is expected to be Panels 1 through 8 as shown on Figure G-1, the WHB Container Storage Unit, ~~and~~ the Parking Area Container Storage Unit, and the Overpack Unit. Note that panels 9 and 10 are scheduled for excavation only under this permit. If other waste management units are permitted during the Disposal Phase, this Closure Plan will be revised to include the additional waste management units. At any given time during disposal operations, it is possible that multiple rooms may be receiving TRU mixed waste for disposal at the same time. Underground HWDUs in which

[1] The free release criteria for items, equipment, and areas is < 20 dpm/100 cm^2 for alpha radioactivity and < 200 dpm/100 cm^2 for beta-gamma radioactivity.

disposal has been completed (i.e., in which CH and RH TRU mixed waste emplacement activities have ceased) will undergo panel closure.

G-1e Closure Activities

G-1e(2) Decontamination and Decommissioning

G-1e(2)(b) Decontamination Activities

Surface Container Storage Units

The procedures employed for waste receipt at the WIPP facility minimize the likelihood for any waste spillage to occur outside the WHB. TRU mixed waste is shipped to the WIPP facility in approved shipping containers (i.e., Contact-Handled or Remote-Handled Packages) that are not opened until they are inside the WHB. Therefore, it is unlikely that soil in the Parking Area Unit, soil in the Overpack Unit, or elsewhere in the vicinity of the WHB will become contaminated with TRU mixed waste constituents as a result of TRU mixed waste management activities. An evaluation of the soils in the vicinity of the WHB will only be necessary if a documented event resulting in a release has occurred outside the WHB.

Table G-2
Anticipated Overall Schedule for Closure Activities

ACTIVITY	FINAL FACILITY CLOSURE	
	START	STOP
Notify NMED of Intent to Close WIPP (or to Implement Contingency Closure)	October 2030	N/A
Perform Contamination Surveys in ~~both~~ the Surface Storage Areas	October 2030	April 2031
Sample Analysis	December 2030	July 2031
Decontamination as Necessary of ~~both~~ the Surface Storage Areas	June 2031	January 2032
Final Contamination Surveys of ~~both~~ the Surface Storage Areas	February 2032	September 2032
Sample Analysis	June 2032	January 2033
Prepare and Submit Container Management Unit Closure Certification	February 2033	May 2033
Dispose of Closure-Derived Waste	November 2030	January 2032
Closure of Open Underground HWDU panel	February 2032*	September 2032
Install Borehole Seals	October 2032	September 2033
Install Repository Seals	June 2033	September 2037
Recontour and Revegetate	October 2037	May 2038
Prepare and Submit Final (Contingency) Closure Certification	October 2037	May 2038
Post-closure Monitoring	July 2038	N/A

N/A--Not Applicable

Refer to Figures G-3 and G-4 for precise activity titles.

*This assumes the final waste is placed in this unit in January 2032 and notification of closure for this HWDU is submitted to the NMED in December 2031.

ATTACHMENT J

HAZARDOUS WASTE MANAGEMENT UNIT TABLES

LIST OF TABLES

Table	Title
Table J-1	Waste Handling Building (WHB) Container Storage Unit
Table J-2	Parking Area Container Storage Unit
Table J-3	Concrete Overpack Container Storage Unit
Table J-4~~3~~	Underground Hazardous Waste Disposal Units

Table J-3
Concrete Overpack Container Storage Unit

Description	Area	Maximum Waste Capacity	Container Equivalent
Overpack Unit	96,490 ft^2 (8,964 m^2)	65,280 ft^3 (1,836 m^3)	408 Concrete Overpacks

Table J-4~~3~~
Underground Hazardous Waste Disposal Units

Description[1]	Waste Type	Maximum Capacity[2]	Container Equivalent
Panel 1	CH TRU	636,000ft^3 (18,000 m^3)	86,500 55-Gallon Drums
Panel 2	CH TRU	636,000 ft^3 (18,000 m^3)	86,500 55-Gallon Drums
Panel 3	CH TRU	662,150 ft^3 (18,750 m^3)	90,150 55-Gallon Drums
Panel 4	CH TRU	662,150 ft^3 (18,750 m^3)	90,150 55-Gallon Drums
	RH TRU	12,570 ft^3 (356 m^3)	400 RH TRU Canisters
Panel 5	CH TRU	662,150 ft^3 (18,750 m^3)	90,150 55-Gallon Drums
	RH TRU	15,720 ft^3 (445 m^3)	500 RH TRU Canisters
Panel 6	CH TRU	662,150 ft^3 (18,750 m^3)	90,150 55-Gallon Drums
	RH TRU	18,860 ft^3 (534 m^3)	600 RH TRU Canisters
Panel 7	CH TRU	662,150 ft^3 (18,750 m^3)	90,150 55-Gallon Drums
	RH TRU	22,950 ft^3 (650 m^3)	730 RH TRU Canisters
Panel 8	CH TRU	662,150 ft^3 (18,750 m^3)	90,150 55-Gallon Drums
	RH TRU	22,950 ft^3 (650 m^3)	730 RH TRU Canisters
Total	**CH TRU**	**5,244,900 ft^3 (148,500 m^3)**	**713,900 55-Gallon Drums**
	RH TRU	**93,050 ft^3 (2,635 m^3)**	**2960 RH TRU Canisters**

1 The area of each panel is approximately 124,150 ft^2 (11,533 m^2).

2 "Maximum Capacity" is the maximum volume of TRU mixed waste that may be emplaced in each panel. The maximum repository capacity of "6.2 million cubic feet of transuranic waste" is specified in the WIPP Land Withdrawal Act (Pub. L. 102-579, as amended)

Appendix C
Waste Isolation Pilot Plant Above Ground Storage Capability (AGSC) Design Drawings

45-Z-032-W0

WASTE ISOLATION PILOT PLANT (WIPP)
ABOVE GROUND STORAGE CAPABILITY (AGSC)

OVER PACK STORAGE ON SLAB

NWP
Nuclear Waste Partnership LLC
An AECOM-led partnership with BWXT and AREVA

CONTACT INFORMATION:

RON GILL
FEDERAL PROJECT DIRECTOR
575-234-7343

CB&I FEDERAL SERVICES, LLC
2410 CHERAHALA BLVD KNOXVILLE, TN 37932

PROJECT NO. 500405

PROJECT LOCATION

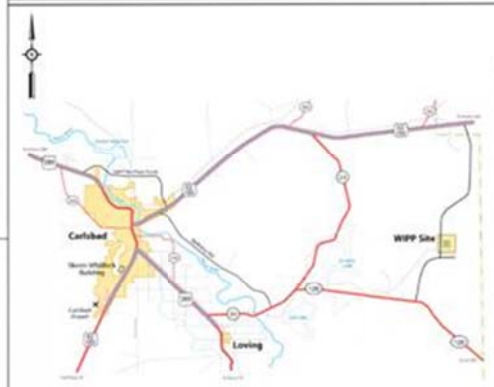

DRAWING INDEX

- COVER SHEET 45-Z-032-W0
- SITE DRAWING ABOVE GROUND STORAGE 45-Z-032-W1
- FLOW DIAGRAM LAYOUT- WASTE HANDLING BUILDING 45-Z-032-W2
- FLOW DIAGRAM LAYOUT- NEW SLAB 45-Z-032-W3
- STRUCTURAL SLAB DRAWING 45-Z-032-W4
- STRUCTURAL SLAB NOTES AND DETAILS 45-Z-032-W5
- CONCRETE OVERPACK STRUCTURAL DRAWINGS AND NOTES 45-Z-032-W6
- SITE DETAILS 45-Z-032-W7
- SUMP PLAN AND SECTION 45-Z-032-W8
- ELECTRICAL LAYOUT, ONE LINE DIAGRAM, SECTIONS AND DETAILS 45-Z-032-W9

PROJECT INFORMATION

APPLICABLE BUILDING CODES:

NFPA 101, LIFE SAFETY CODE, 2012

IBC, INTERNATIONAL BUILDING CODE, 2009
(PER STATE OF NEW MEXICO)

SLAB DATA:

BUILDING S.F. ..... 96,410 S.F.

FOR PERMITTING ONLY! – NOT FOR CONSTRUCTION

PERMIT DRAWINGS ARE NOT FOR CONSTRUCTION OR FABRICATION. BILL OF MATERIALS, SHOP DRAWINGS, ETC. CREATED FROM THESE DRAWINGS MAY BE REVISED AT THE EXPENSE OF THE CONTRACTOR.

PROFESSIONAL SEAL
06/15/2016
CB&I FEDERAL SERVICES, LLC
2410 CHERAHALA BLVD
KNOXVILLE, TN 37932
(865) 560-7800

INDEX CODE NUMBER

SYSTEM	WBS	DWG TYPE	CL	VENDOR
XXXX	XXX	XXXXXX	XXX	XXX

THIS DRAWING IS UP-TO-DATE AND LATEST REVISION VERIFIED WITH THE FOLLOWING OUTSTANDING ENGINEERING CHANGE ORDERS:

SIGNATURE AND DATE: _____

THIS DRAWING OBSOLETE FIVE DAYS FROM THIS DATE.

A	ISSUED FOR CONCEPTUAL DESIGN	EDA 07/07/16	CAW 07/07/16	N/A	N/A

THIS DRAWING CREATED BY ENGINEERING CHANGE ORDER (ECO): NO.

MFN/EDA 06/07/16

CARLSBAD FIELD OFFICE

NWP
Nuclear Waste Partnership LLC
An AECOM-led Partnership with BWXT and AREVA
Waste Isolation Pilot Plant — Carlsbad, New Mexico

COVER SHEET

SCALE: N.T.S.
WORKPRODUCT DWG REF WBS V12

SIZE D | CODE XXXX | DWG NO. 45-Z-032-W0 | REV A

THIS DRAWING TAKEN FROM: N/A
VENDOR: N/A

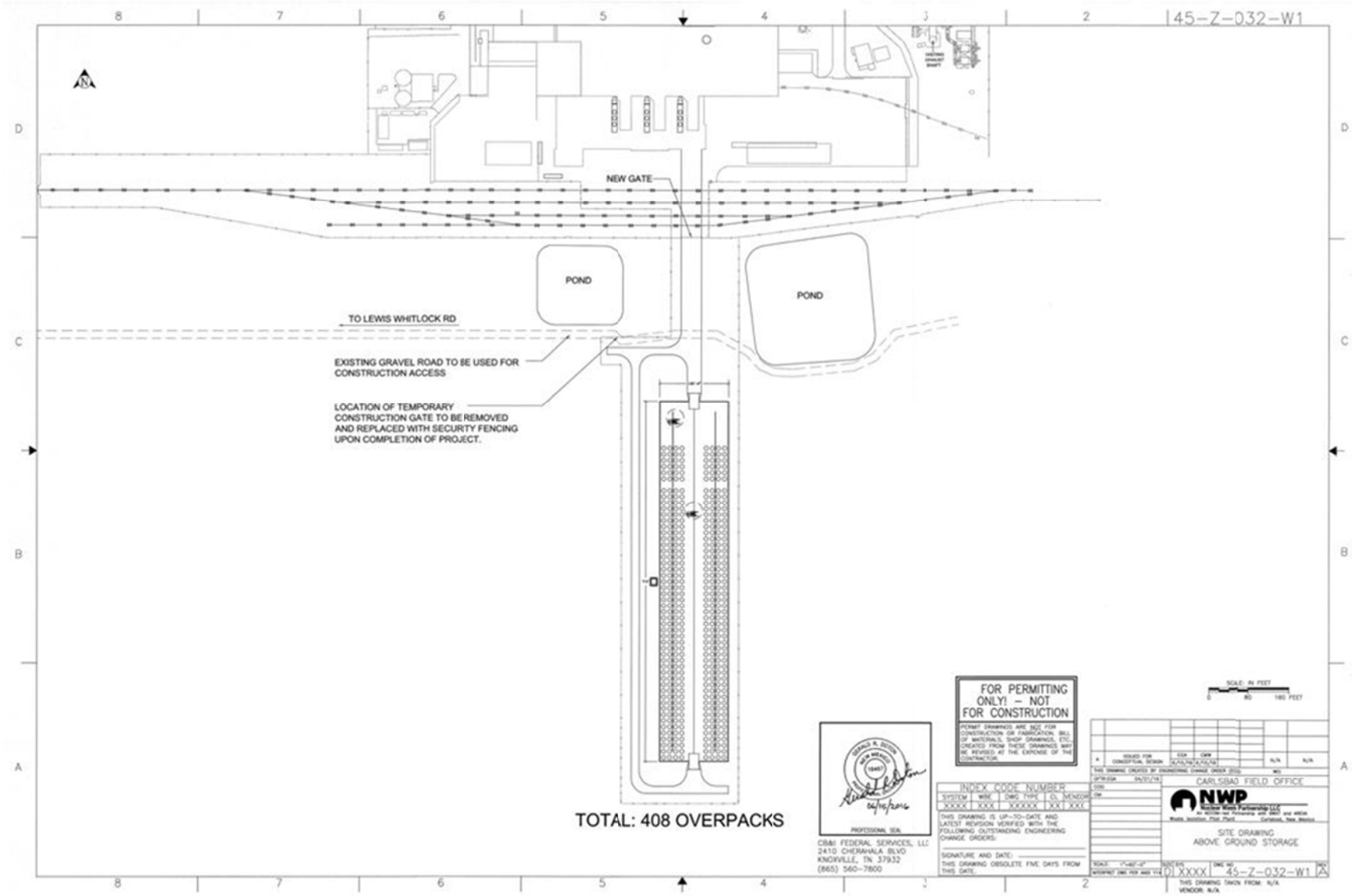
45-Z-032-W1
NEW GATE
POND
POND
TO LEWIS WHITLOCK RD
EXISTING GRAVEL ROAD TO BE USED FOR CONSTRUCTION ACCESS
LOCATION OF TEMPORARY CONSTRUCTION GATE TO BE REMOVED AND REPLACED WITH SECURITY FENCING UPON COMPLETION OF PROJECT.
TOTAL: 408 OVERPACKS
FOR PERMITTING ONLY! – NOT FOR CONSTRUCTION
PERMIT DRAWINGS ARE NOT FOR CONSTRUCTION OR FABRICATION. BILL OF MATERIALS, SHOP DRAWINGS, ETC. CREATED FROM THESE DRAWINGS MUST BE REVISED AT THE EXPENSE OF THE CONTRACTOR.
SCALE: IN FEET
0 80 160 FEET
PROFESSIONAL SEAL
CB&I FEDERAL SERVICES, LLC
2410 CHERAHALA BLVD
KNOXVILLE, TN 37932
(865) 560-7800
INDEX CODE NUMBER
SYSTEM WBS DWG TYPE CL MENCOR
XXXX XXX XXXXXX XX XXX
THIS DRAWING IS UP-TO-DATE AND LATEST REVISION VERIFIED WITH THE FOLLOWING OUTSTANDING ENGINEERING CHANGE ORDERS:
SIGNATURE AND DATE:
THIS DRAWING OBSOLETE FIVE DAYS FROM THIS DATE
ISSUED FOR CONCEPTUAL DESIGN
CARLSBAD FIELD OFFICE
NWP
SITE DRAWING
ABOVE GROUND STORAGE
01 XXXX
45-Z-032-W1
THIS DRAWING TAKEN FROM: N/A
VENDOR: N/A

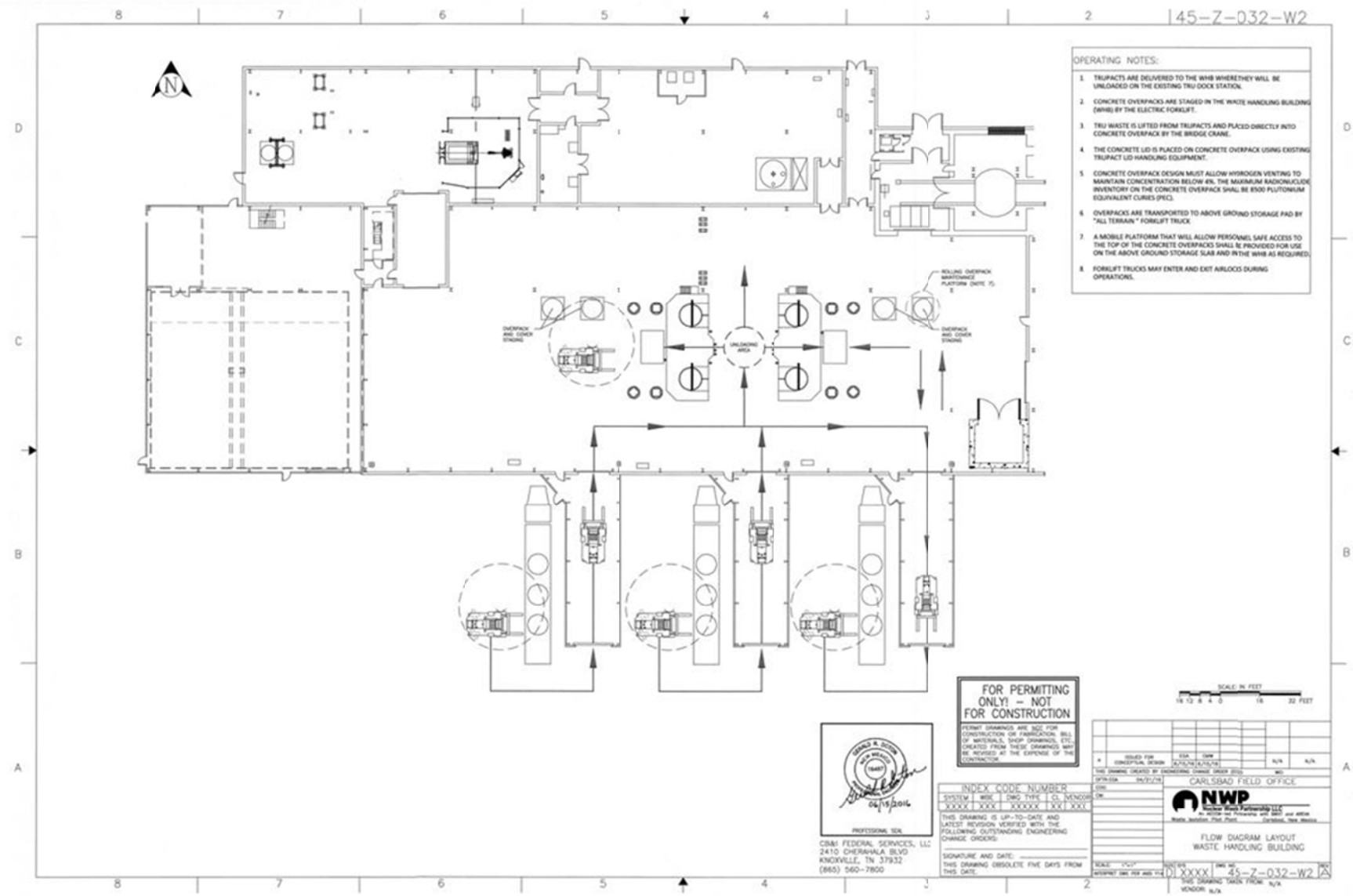
45-Z-032-W2
OPERATING NOTES:
1. TRUPACTS ARE DELIVERED TO THE WHB WHERE THEY WILL BE UNLOADED ON THE EXISTING TRU DOCK STATION.
2. CONCRETE OVERPACKS ARE STAGED IN THE WASTE HANDLING BUILDING (WHB) BY THE ELECTRIC FORKLIFT.
3. TRU WASTE IS LIFTED FROM TRUPACTS AND PLACED DIRECTLY INTO CONCRETE OVERPACK BY THE BRIDGE CRANE.
4. THE CONCRETE LID IS PLACED ON CONCRETE OVERPACK USING EXISTING TRUPACT LID HANDLING EQUIPMENT.
5. CONCRETE OVERPACK DESIGN MUST ALLOW HYDROGEN VENTING TO MAINTAIN CONCENTRATION BELOW 4%. THE MAXIMUM RADIONUCLIDE INVENTORY ON THE CONCRETE OVERPACK SHALL BE 8500 PLUTONIUM EQUIVALENT CURIES (PEC).
6. OVERPACKS ARE TRANSPORTED TO ABOVE GROUND STORAGE PAD BY "ALL TERRAIN" FORKLIFT TRUCK
7. A MOBILE PLATFORM THAT WILL ALLOW PERSONNEL SAFE ACCESS TO THE TOP OF THE CONCRETE OVERPACKS SHALL BE PROVIDED FOR USE ON THE ABOVE GROUND STORAGE SLAB AND IN THE WHB AS REQUIRED.
8. FORKLIFT TRUCKS MAY ENTER AND EXIT AIRLOCKS DURING OPERATIONS.
ROLLING OVERPACK MAINTENANCE PLATFORM (NOTE 7).
OVERPACK AND COVER STAGING
UNLOADING AREA
OVERPACK AND COVER STAGING
FOR PERMITTING ONLY! – NOT FOR CONSTRUCTION
PERMIT DRAWINGS ARE NOT FOR CONSTRUCTION OR FABRICATION. BILL OF MATERIALS, SHOP DRAWINGS, ETC. CREATED FROM THESE DRAWINGS MAY BE REVISED AT THE EXPENSE OF THE CONTRACTOR.
SCALE: IN FEET
16 12 8 4 0 16 32 FEET
PROFESSIONAL SEAL
CB&I FEDERAL SERVICES, LLC
2410 CHERAHALA BLVD
KNOXVILLE, TN 37932
(865) 560-7800
INDEX CODE NUMBER
SYSTEM | MISC | DWG TYPE | CL | VENDOR
XXXXX | XXXX | XXXXXX | XXX | XXXX
THIS DRAWING IS UP-TO-DATE AND LATEST REVISION VERIFIED WITH THE FOLLOWING OUTSTANDING ENGINEERING CHANGE ORDERS:
SIGNATURE AND DATE:
THIS DRAWING OBSOLETE FIVE DAYS FROM THIS DATE.
ISSUED FOR CONCEPTUAL DESIGN
CARLSBAD FIELD OFFICE
NWP
Nuclear Waste Partnership LLC
FLOW DIAGRAM LAYOUT
WASTE HANDLING BUILDING
01 XXXX 45-Z-032-W2
THIS DRAWING TAKEN FROM: N/A
VENDOR: N/A

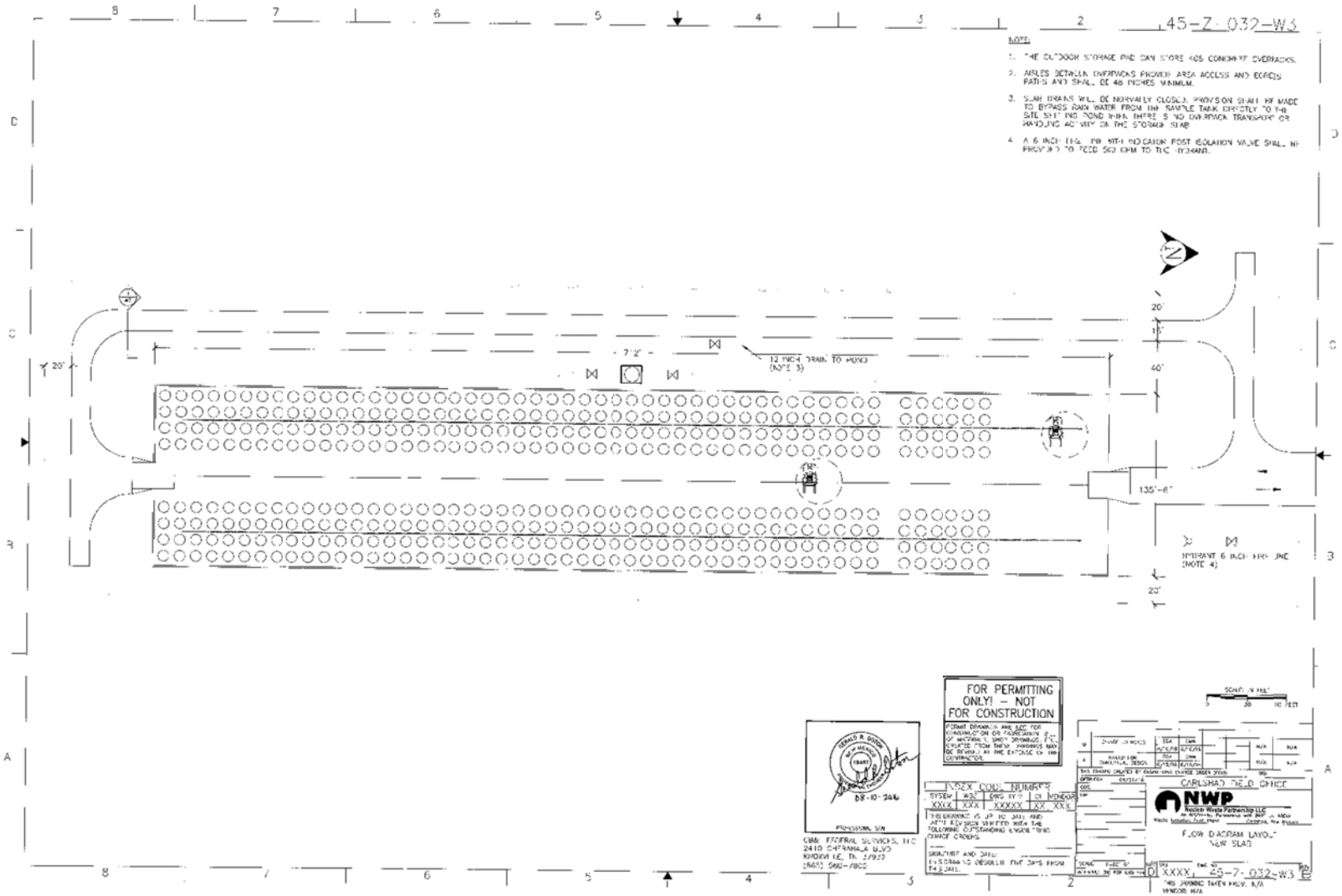
45-Z-032-W3
NOTE:
1. THE OUTDOOR STORAGE PAD CAN STORE 405 CONTAINER OVERPACKS.
2. AISLES BETWEEN OVERPACKS PROVIDE AREA ACCESS AND EGRESS PATHS AND SHALL BE 48 INCHES MINIMUM.
3. SLAB DRAINS WILL BE NORMALLY CLOSED. PROVISION SHALL BE MADE TO BYPASS RAIN WATER FROM THE SAMPLE TANK DIRECTLY TO THE SITE SETTLING POND WHEN THERE IS NO OVERPACK TRANSPORT OR HANDLING ACTIVITY ON THE STORAGE SLAB
4. A 6 INCH FIRE LINE WITH INDICATOR POST ISOLATION VALVE SHALL BE PROVIDED TO TEED 500 GPM TO THE HYDRANT.
12 INCH DRAIN TO POND (NOTE 3)
HYDRANT 6 INCH FIRE LINE (NOTE 4)
135'-6"
FOR PERMITTING ONLY! – NOT FOR CONSTRUCTION
CARLSBAD FIELD OFFICE
NWP
FLOW DIAGRAM LAYOUT NEW SLAB
XXXX-25-7-032-W3

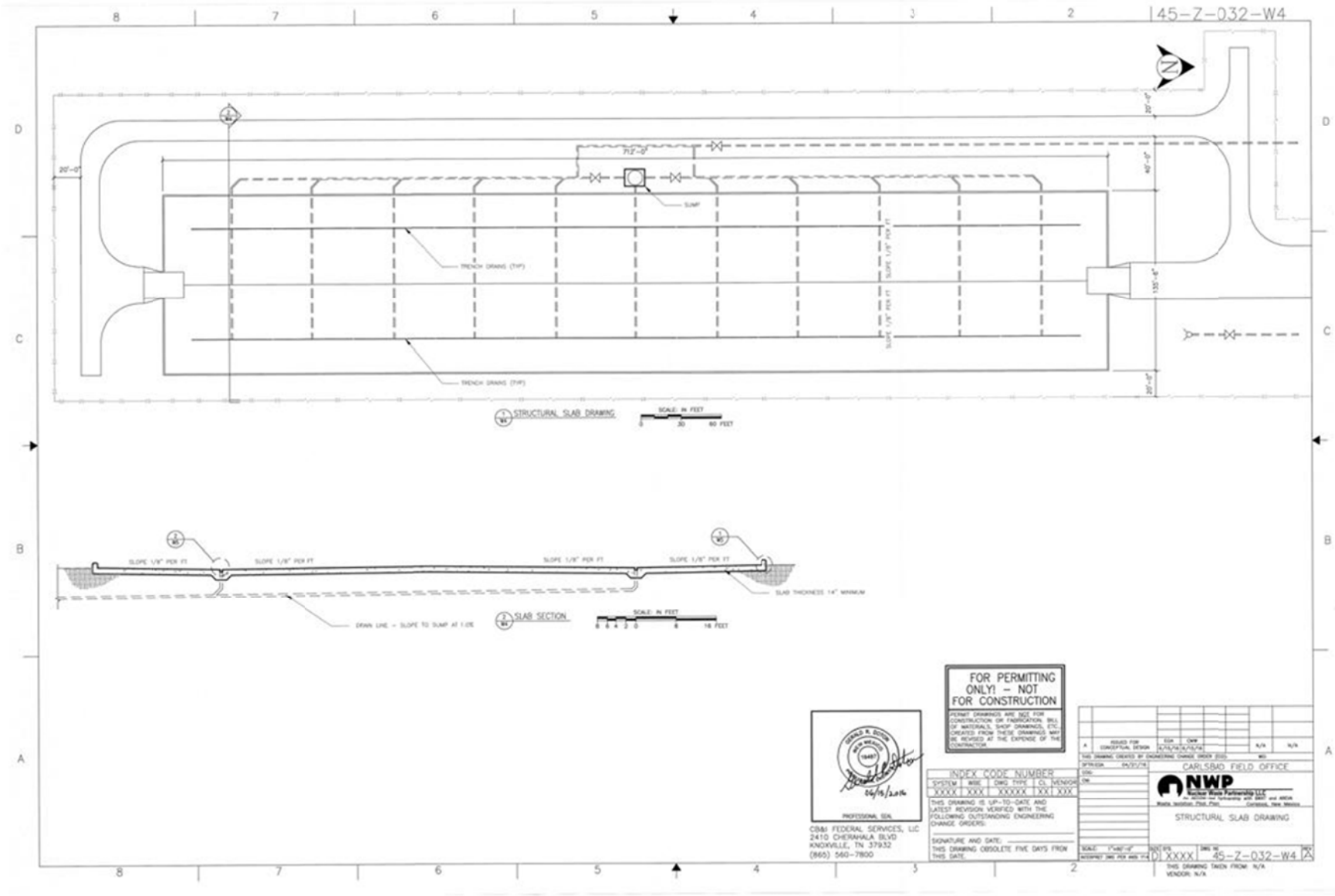
45-Z-032-W4
712'-0"
SUMP
TRENCH DRAINS (TYP)
SLOPE 1/8" PER FT
20'-0"
40'-0"
132'-6"
STRUCTURAL SLAB DRAWING
SCALE: IN FEET
0 30 60 FEET
SLOPE 1/8" PER FT
SLAB THICKNESS 14" MINIMUM
DRAIN LINE - SLOPE TO SUMP AT 1.0%
SLAB SECTION
SCALE: IN FEET
8 6 4 2 0 8 16 FEET
FOR PERMITTING ONLY! - NOT FOR CONSTRUCTION
PERMIT DRAWINGS ARE NOT FOR CONSTRUCTION OR FABRICATION. BILL OF MATERIALS, SHOP DRAWINGS, ETC. CREATED FROM THESE DRAWINGS MAY BE REVISED AT THE EXPENSE OF THE CONTRACTOR.
PROFESSIONAL SEAL
CB&I FEDERAL SERVICES, LLC
2410 CHERAHALA BLVD
KNOXVILLE, TN 37932
(865) 560-7800
INDEX CODE NUMBER
SYSTEM | WBS | DWG TYPE | CL | VENDOR
XXXX | XXX | XXXXX | XX | XXX
THIS DRAWING IS UP-TO-DATE AND LATEST REVISION VERIFIED WITH THE FOLLOWING OUTSTANDING ENGINEERING CHANGE ORDERS:
SIGNATURE AND DATE:
THIS DRAWING OBSOLETE FIVE DAYS FROM THIS DATE.
A ISSUED FOR CONCEPTUAL DESIGN
CARLSBAD FIELD OFFICE
NWP
Nuclear Waste Partnership LLC
Waste Isolation Pilot Plant
Carlsbad, New Mexico
STRUCTURAL SLAB DRAWING
D XXXX 45-Z-032-W4
THIS DRAWING TAKEN FROM: N/A
VENDOR: N/A

45-Z-032-W5

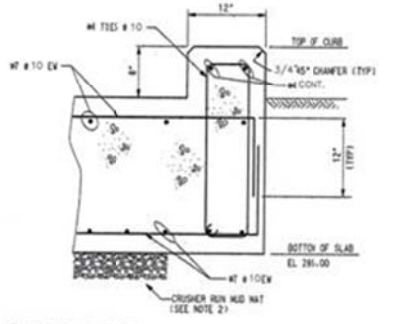

1/M3 STRUCTURAL SLAB DETAIL
SCALE: N.T.S.

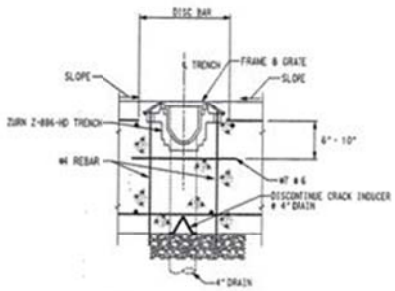

2/M3 STRUCTURAL SLAB DETAIL
SCALE: N.T.S.

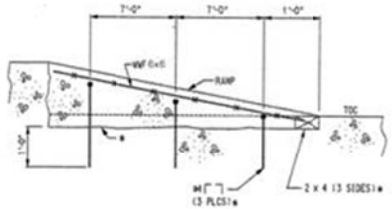

* OPTIONAL CONSTRUCTION JOINT AND DOWEL FOR SECONDARY STAGE PLACEMENT

3/M3 STRUCTURAL SLAB DETAIL
SCALE: N.T.S.

GENERAL

1. STRUCTURAL DRAWINGS SHALL BE USED IN CONJUNCTION WITH THE MECHANICAL, ELECTRICAL DRAWINGS, SHOP DRAWINGS AND SPECIFICATIONS.
2. THE CONTRACTOR SHALL REVIEW ALL CONSTRUCTION DOCUMENTS AND SPECIFICATIONS AND IS ENTIRELY RESPONSIBLE FOR COORDINATING THE WORK OF ALL TRADES, VERIFYING ALL EXISTING SITE CONDITIONS, CONFIRMING ALL DIMENSIONS, ELEVATIONS, AND MEASUREMENTS. THE CONTRACTOR SHALL NOTIFY THE ENGINEER OF ANY DISCREPANCIES FOR CLARIFICATIONS BEFORE PROCEEDING WITH THE WORK.
3. THE STRUCTURAL DRAWINGS HEREIN REPRESENTS THE FINISHED STRUCTURE. THE CONTRACTOR SHALL PROVIDE ALL TEMPORARY SHORING, GUYING, AND BRACING REQUIRED TO ERECT AND HOLD THE STRUCTURE IN PROPER ALIGNMENT UNTIL ALL STRUCTURAL WORK AND CONNECTIONS HAVE BEEN COMPLETED. THE DESIGN, SAFETY, ADEQUACY AND INSPECTION OF ERECTION SHORING, BRACING, TEMPORARY SUPPORTS, ETC. IS THE SOLE RESPONSIBILITY OF THE CONTRACTOR.
4. ALL DETAILS, NOTES, ETC. INDICATED ON THE DRAWINGS ARE TO BE CONSIDERED TYPICAL FOR SIMILAR CONDITIONS U.O.N.
5. DIMENSIONS SHOWN ON PLANS TAKES PRECEDENCE OVER SCALED DIMENSIONS.
6. THE CONTRACTOR IS RESPONSIBLE FOR TEMPORARY BRACING AND SUPPORT, AND IS RESPONSIBLE FOR THE PROTECTION OF ALL ADJACENT AND NEARBY STRUCTURES FROM DAMAGE DURING CONSTRUCTION. ALL DAMAGE SHALL BE REPAIRED TO THE SATISFACTION OF THE ENGINEER AT THE CONTRACTOR'S EXPENSE.
7. SHOP DRAWINGS SHALL BE SUBMITTED TO THE ENGINEER FOR REVIEW PRIOR TO FABRICATION. ALL SHOP DRAWINGS SHALL BE REVIEWED BY THE CONTRACTOR BEFORE SUBMITTAL. THE ENGINEER'S REVIEW IS TO BE FOR CONFORMANCE WITH THE DESIGN CONCEPT AND GENERAL COMPLIANCE WITH THE RELEVANT CONTRACT DOCUMENTS. THE ENGINEER'S REVIEW DOES NOT RELIEVE THE CONTRACTOR OF THE SOLE RESPONSIBILITY TO REVIEW, CHECK, AND COORDINATE THE SHOP DRAWINGS PRIOR TO SUBMISSION. THE CONTRACTOR REMAINS SOLELY RESPONSIBLE FOR THE CORRECTNESS, COMPLETENESS AND ACCURACY OF THE SHOP DRAWINGS.
8. THE USE OF THE CONCRETE OVERPACKS TO SATISFY THE REQUIRED SAFETY SIGNIFICANT FUNCTIONS OF THIS PROJECT ENABLES THE CONCRETE SLAB TO BE CLASSIFIED AS A COMMERCIAL GRADE STRUCTURE.

REINFORCED CONCRETE

1. CONCRETE WORK SHALL CONFORM TO BUILDING CODE REQUIREMENTS FOR REINFORCED CONCRETE (ACI 318) AND SPECIFICATIONS FOR STRUCTURAL CONCRETE (ACI 301).
2. CONCRETE SHALL HAVE A MINIMUM 28 DAY COMPRESSIVE STRENGTH OF 4,000 PSI. ALL CONCRETE USED FOR CONSTRUCTION SHALL HAVE A MAXIMUM WATER-CEMENT RATIO OF 0.45. ALL CONCRETE EXPOSED TO WEATHER SHALL BE 5.5% AIR-ENTRAINED.
3. COLD WEATHER CONCRETING SHALL BE IN ACCORDANCE WITH ACI 306. HOT WEATHER CONCRETING SHALL BE IN ACCORDANCE WITH ACI 305.
4. STEEL REINFORCEMENT SHALL HAVE A MINIMUM YIELD STRENGTH OF 60,000 PSI CONFORMING TO ASTM A615, GR 60.
5. ALL REINFORCING SHALL BE DETAILED IN ACCORDANCE WITH ACI 315. DETAILS AND DETAILING OF CONCRETE REINFORCEMENT. PROVIDE CLASS B SPLICE FOR ALL CONTINUOUS REINFORCEMENT UNLESS OTHERWISE NOTED. MINIMUM ANCHORAGE AND SPLICE REQUIREMENTS FOR REINFORCING BARS SHALL CONFORM TO ACI 318.
6. EXPOSED CORNERS OF CONCRETE SHALL HAVE A ¾" CHAMFER U.O.N.
7. FORMWORK FOR CONCRETE SHALL CONFORM TO AO 347, GUIDE TO FORMWORK FOR CONCRETE.
8. CONCRETE REINFORCING MUST BE COVERED BY 2" OF CONCRETE MINIMUM.

CODES AND STANDARDS

1. IBC 2009, INTERNATIONAL BUILDING CODE
2. ASCE 7-05, MINIMUM DESIGN LOADS FOR BUILDING AND OTHER STRUCTURES
3. ACI 318-08, BUILDING CODE REQUIREMENTS FOR STRUCTURAL CONCRETE

FOUNDATION NOTES

1. ALL FOUNDATION DESIGN AND CONSTRUCTION SHALL CONFORM TO THE REQUIREMENTS OF THE INTERNATIONAL BUILDING CODE 2009.
2. ALL FOOTINGS SHALL BE FOUNDED ON NATURAL UNDISTURBED MATERIAL OR ON COMPACTED STRUCTURAL FILL HAVING A MINIMUM BEARING CAPACITY OF 2 TONS PER SQUARE FOOT UNLESS OTHERWISE SHOWN ON THE DRAWINGS. STRUCTURAL FILL SHALL BE PLACED AND COMPACTED OVER THE NATURAL UNDISTURBED MATERIAL. STRUCTURAL FILL SHALL BE PLACED IN LIFTS HAVING A COMPACTED THICKNESS OF SIX INCHES AND BE COMPACTED TO 95% OF MAXIMUM DRY DENSITY.
3. THE CONTRACTOR SHALL RETAIN THE SERVICES OF A QUALIFIED GEOTECHNICAL ENGINEER, LICENSED IN NEW MEXICO, TO INSPECT ALL FOUNDATIONS BEFORE CONCRETE PLACED, AND SHALL CERTIFY THAT THE ACTUAL ON SITE SOIL CONDITIONS ARE EQUAL TO OR GREATER THAN THOSE ASSUMED FOR THE DESIGN OF THE FOUNDATIONS (SLAB).
4. THE CONTRACTOR SHALL INVESTIGATE ACTUAL LOCATION OF EXISTING UNDERGROUND LINES AND UTILITIES BEFORE EXCAVATING AND ADVISE THE ENGINEER OF ANY INTERFERENCE. ALL EXCAVATIONS NEAR EXISTING LINES SHALL BE PERFORMED WITH EXTREME CAUTION.
5. THE CONTRACTOR SHALL TAKE ALL NECESSARY PRECAUTIONS TO INSURE THAT THE ADJACENT EXISTING BUILDING IS NOT DAMAGED DURING EXCAVATION AND CONSTRUCTION OF NEW FOUNDATIONS (SLABS).
6. FOOTING ELEVATIONS SHOWN ON DRAWINGS REPRESENT MINIMUM DEPTHS AND ARE NOT TO BE CONSTRUED AS LIMITING THE AMOUNT OF EXCAVATION REQUIRED TO REACH GOOD BEARING MATERIAL.
7. NO CONCRETE SHALL BE PLACED IN WATER OR ON FROZEN GROUND.
8. AT A MINIMUM THE FOLLOWING ITEMS SHALL BE SUBMITTED TO THE ENGINEER FOR REVIEW AND APPROVAL PRIOR TO PLACEMENT OF CONCRETE FOUNDATIONS:
   - CONCRETE MIX DESIGN
   - REINFORCING STEEL SHOP DRAWINGS
   - MANUFACTURER'S INFORMATION ON CONCRETE ADMIXTURES AND OTHER PROPRIETARY MATERIALS.
9. THE STRUCTURAL DRAWINGS SHALL BE USED IN CONJUNCTION WITH THE DRAWINGS OF OTHER DISCIPLINES. THE CONTRACTOR SHALL VERIFY THE REQUIREMENTS OF OTHER TRADES AS TO SLEEVES, INSERTS, ANCHORS, AND OTHER ITEMS TO BE PLACED OR SET IN THE CONCRETE.

FOR PERMITTING ONLY! – NOT FOR CONSTRUCTION

PERMIT DRAWINGS ARE NOT FOR CONSTRUCTION OR FABRICATION. BILL OF MATERIALS, SHOP DRAWINGS, ETC. CREATED FROM THESE DRAWINGS MAY BE REVISED AT THE EXPENSE OF THE CONTRACTOR.

PROFESSIONAL SEAL
06/16/2010

CB&I FEDERAL SERVICES, LLC
2410 CHERAHALA BLVD
KNOXVILLE, TN 37932
(865) 560-7800

INDEX CODE NUMBER				
SYSTEM	WBS	DWG TYPE	CL	VENDOR
XXXX	XXX	XXXXX	XX	XXX

THIS DRAWING IS UP-TO-DATE AND LATEST REVISION VERIFIED WITH THE FOLLOWING OUTSTANDING ENGINEERING CHANGE ORDERS:

SIGNATURE AND DATE:

THIS DRAWING OBSOLETE FIVE DAYS FROM THIS DATE:

A	ISSUED FOR CONCEPTUAL DESIGN					N/A	N/A

THIS DRAWING CREATED BY ENGINEERING CHANGE ORDER (ECO): NO

DFTR-EGA 06/01/10
CHD
DR

CARLSBAD FIELD OFFICE

NWP
Nuclear Waste Partnership LLC
An AECOM-led Partnership with BWXT and AREVA
Waste Isolation Pilot Plant Carlsbad, New Mexico

STRUCTURAL SLAB NOTES AND DETAILS

SCALE: 1"=NOT-0" | SUBSYSTEM: 01 XXXX | DWG NO: 45-Z-032-W5 | REV: A

INTERPRET DWG PER WBS 1114

THIS DRAWING TAKEN FROM: N/A
VENDOR: N/A

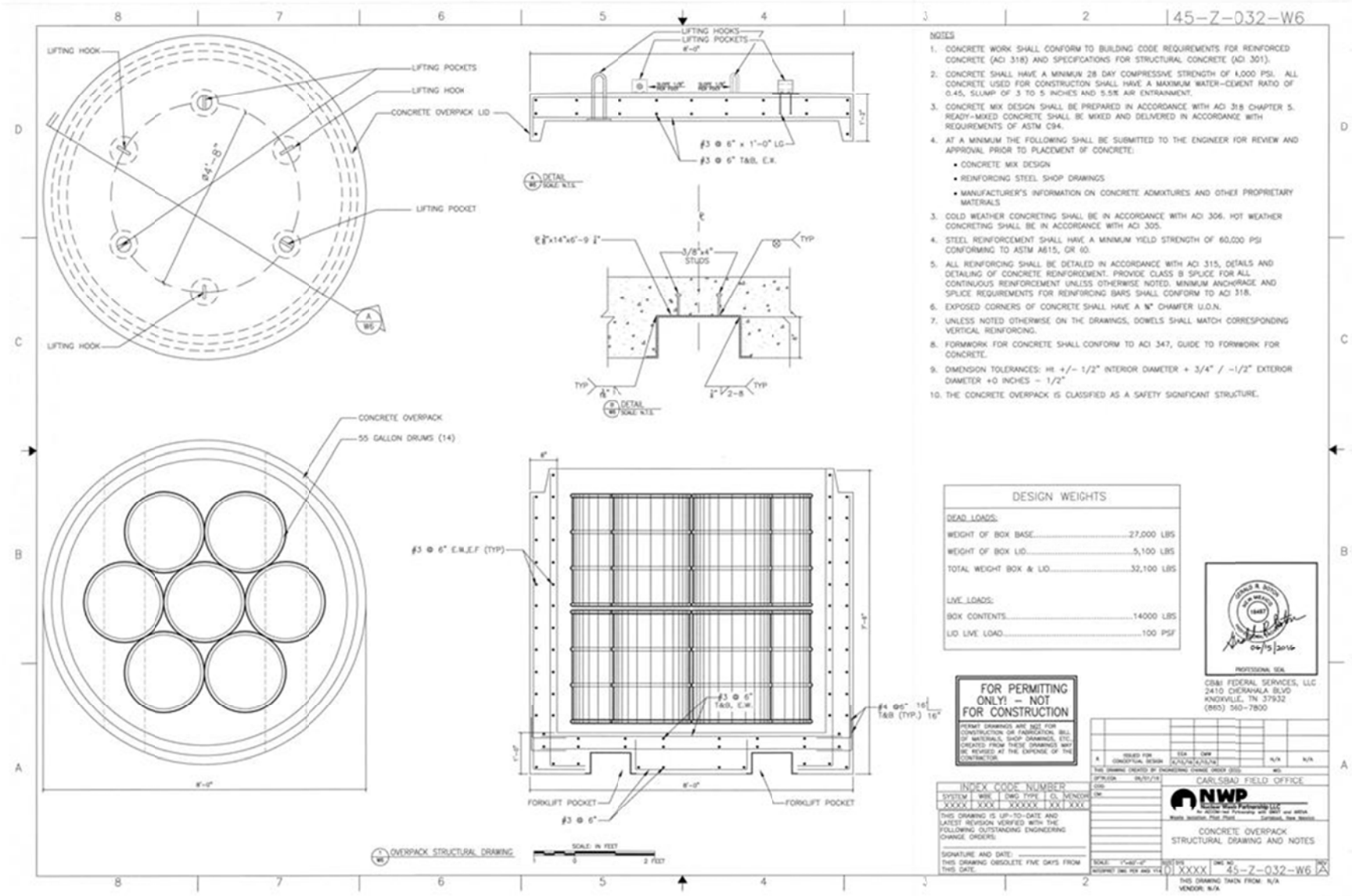
45-Z-032-W6
LIFTING HOOK
LIFTING POCKETS
LIFTING HOOK
CONCRETE OVERPACK LID
LIFTING POCKET
LIFTING HOOK
LIFTING HOOKS
LIFTING POCKETS
#3 @ 6" x 1'-0" LG
#3 @ 6" T&B, E.W.
DETAIL
3/8"x4" STUDS
TYP
CONCRETE OVERPACK
55 GALLON DRUMS (14)
#3 @ 6" E.W.,E.F (TYP)
#3 @ 6" T&B, E.W.
#4 @6" T&B (TYP.)
FORKLIFT POCKET
FORKLIFT POCKET
#3 @ 6"
OVERPACK STRUCTURAL DRAWING
SCALE: IN FEET
NOTES
1. CONCRETE WORK SHALL CONFORM TO BUILDING CODE REQUIREMENTS FOR REINFORCED CONCRETE (ACI 318) AND SPECIFICATIONS FOR STRUCTURAL CONCRETE (ACI 301).
2. CONCRETE SHALL HAVE A MINIMUM 28 DAY COMPRESSIVE STRENGTH OF 4,000 PSI. ALL CONCRETE USED FOR CONSTRUCTION SHALL HAVE A MAXIMUM WATER-CEMENT RATIO OF 0.45, SLUMP OF 3 TO 5 INCHES AND 5.5% AIR ENTRAINMENT.
3. CONCRETE MIX DESIGN SHALL BE PREPARED IN ACCORDANCE WITH ACI 318 CHAPTER 5. READY-MIXED CONCRETE SHALL BE MIXED AND DELIVERED IN ACCORDANCE WITH REQUIREMENTS OF ASTM C94.
4. AT A MINIMUM THE FOLLOWING SHALL BE SUBMITTED TO THE ENGINEER FOR REVIEW AND APPROVAL PRIOR TO PLACEMENT OF CONCRETE:
• CONCRETE MIX DESIGN
• REINFORCING STEEL SHOP DRAWINGS
• MANUFACTURER'S INFORMATION ON CONCRETE ADMIXTURES AND OTHER PROPRIETARY MATERIALS
3. COLD WEATHER CONCRETING SHALL BE IN ACCORDANCE WITH ACI 306. HOT WEATHER CONCRETING SHALL BE IN ACCORDANCE WITH ACI 305.
4. STEEL REINFORCEMENT SHALL HAVE A MINIMUM YIELD STRENGTH OF 60,000 PSI CONFORMING TO ASTM A615, GR 60.
5. ALL REINFORCING SHALL BE DETAILED IN ACCORDANCE WITH ACI 315, DETAILS AND DETAILING OF CONCRETE REINFORCEMENT. PROVIDE CLASS B SPLICE FOR ALL CONTINUOUS REINFORCEMENT UNLESS OTHERWISE NOTED. MINIMUM ANCHORAGE AND SPLICE REQUIREMENTS FOR REINFORCING BARS SHALL CONFORM TO ACI 318.
6. EXPOSED CORNERS OF CONCRETE SHALL HAVE A ¾" CHAMFER U.O.N.
7. UNLESS NOTED OTHERWISE ON THE DRAWINGS, DOWELS SHALL MATCH CORRESPONDING VERTICAL REINFORCING.
8. FORMWORK FOR CONCRETE SHALL CONFORM TO ACI 347, GUIDE TO FORMWORK FOR CONCRETE.
9. DIMENSION TOLERANCES: HT +/- 1/2" INTERIOR DIAMETER + 3/4" / -1/2" EXTERIOR DIAMETER +0 INCHES - 1/2"
10. THE CONCRETE OVERPACK IS CLASSIFIED AS A SAFETY SIGNIFICANT STRUCTURE.
DESIGN WEIGHTS
DEAD LOADS:
WEIGHT OF BOX BASE....27,000 LBS
WEIGHT OF BOX LID....5,100 LBS
TOTAL WEIGHT BOX & LID....32,100 LBS
LIVE LOADS:
BOX CONTENTS....14000 LBS
LID LIVE LOAD....100 PSF
FOR PERMITTING ONLY! - NOT FOR CONSTRUCTION
PERMIT DRAWINGS ARE NOT FOR CONSTRUCTION OR FABRICATION. BILL OF MATERIALS, SHOP DRAWINGS, ETC., CREATED FROM THESE DRAWINGS MAY BE REVISED AT THE EXPENSE OF THE CONTRACTOR.
PROFESSIONAL SEAL
CB&I FEDERAL SERVICES, LLC
2410 CHERAHALA BLVD
KNOXVILLE, TN 37932
(865) 560-7800
INDEX CODE NUMBER
SYSTEM | WBS | DWG TYPE | CL | MENSOR
XXXXX | XXX | XXXXXX | XX | XXX
THIS DRAWING IS UP-TO-DATE AND LATEST REVISION VERIFIED WITH THE FOLLOWING OUTSTANDING ENGINEERING CHANGE ORDERS.
SIGNATURE AND DATE:
THIS DRAWING OBSOLETE FIVE DAYS FROM THIS DATE
ISSUED FOR CONCEPTUAL DESIGN
CARLSBAD FIELD OFFICE
NWP
CONCRETE OVERPACK
STRUCTURAL DRAWING AND NOTES
SCALE: 1"=0'-0"
0 XXXX
45-Z-032-W6
THIS DRAWING TAKEN FROM: N/A
VENDOR: N/A

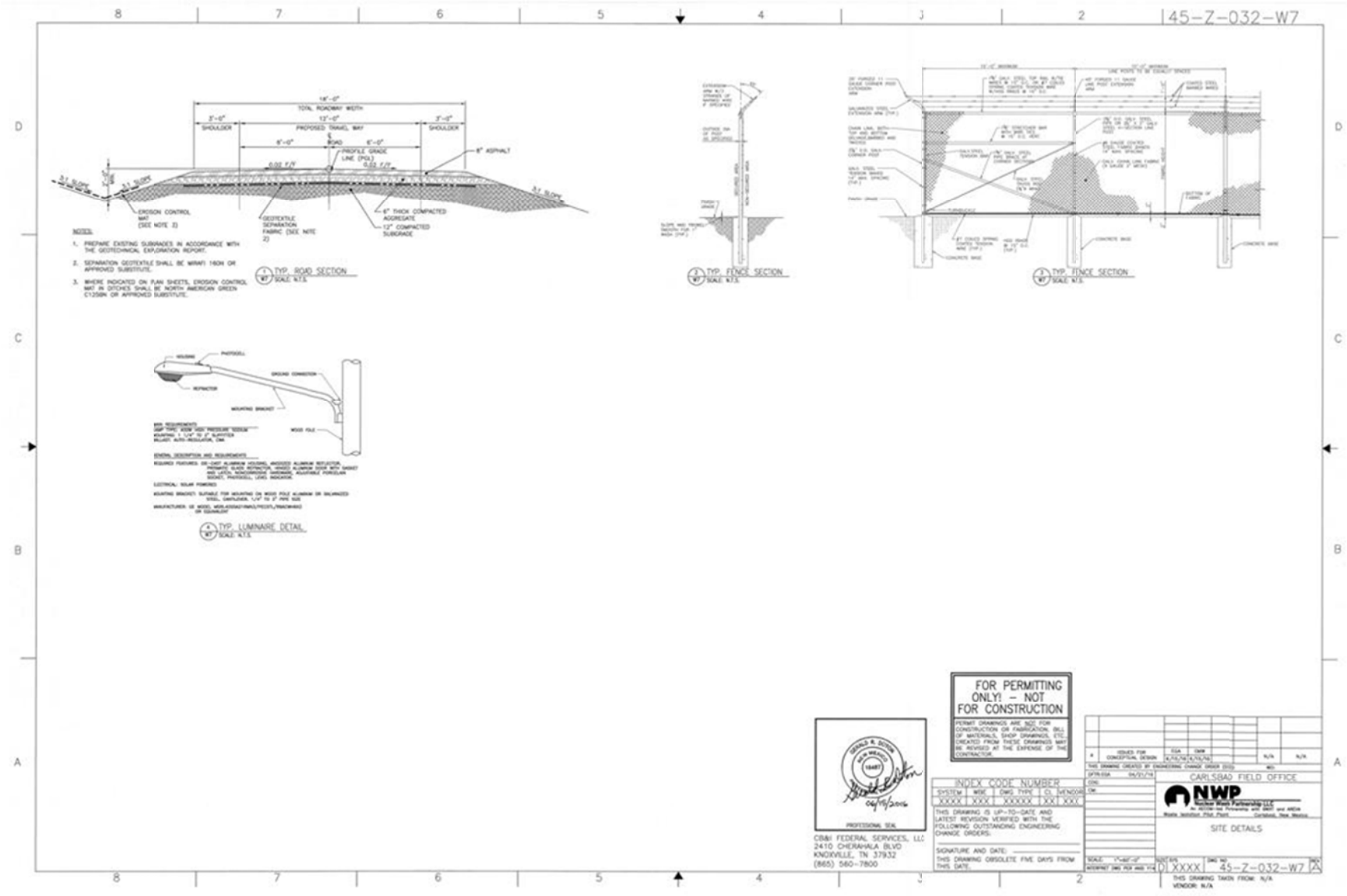
45-Z-032-W7
TYP. ROAD SECTION
TYP. FENCE SECTION
TYP. FENCE SECTION
TYP. LUMINAIRE DETAIL
FOR PERMITTING ONLY! - NOT FOR CONSTRUCTION
INDEX CODE NUMBER
CARLSBAD FIELD OFFICE
NWP
SITE DETAILS
CB&I FEDERAL SERVICES, LLC
2410 CHERAHALA BLVD
KNOXVILLE, TN 37932
(865) 560-7800

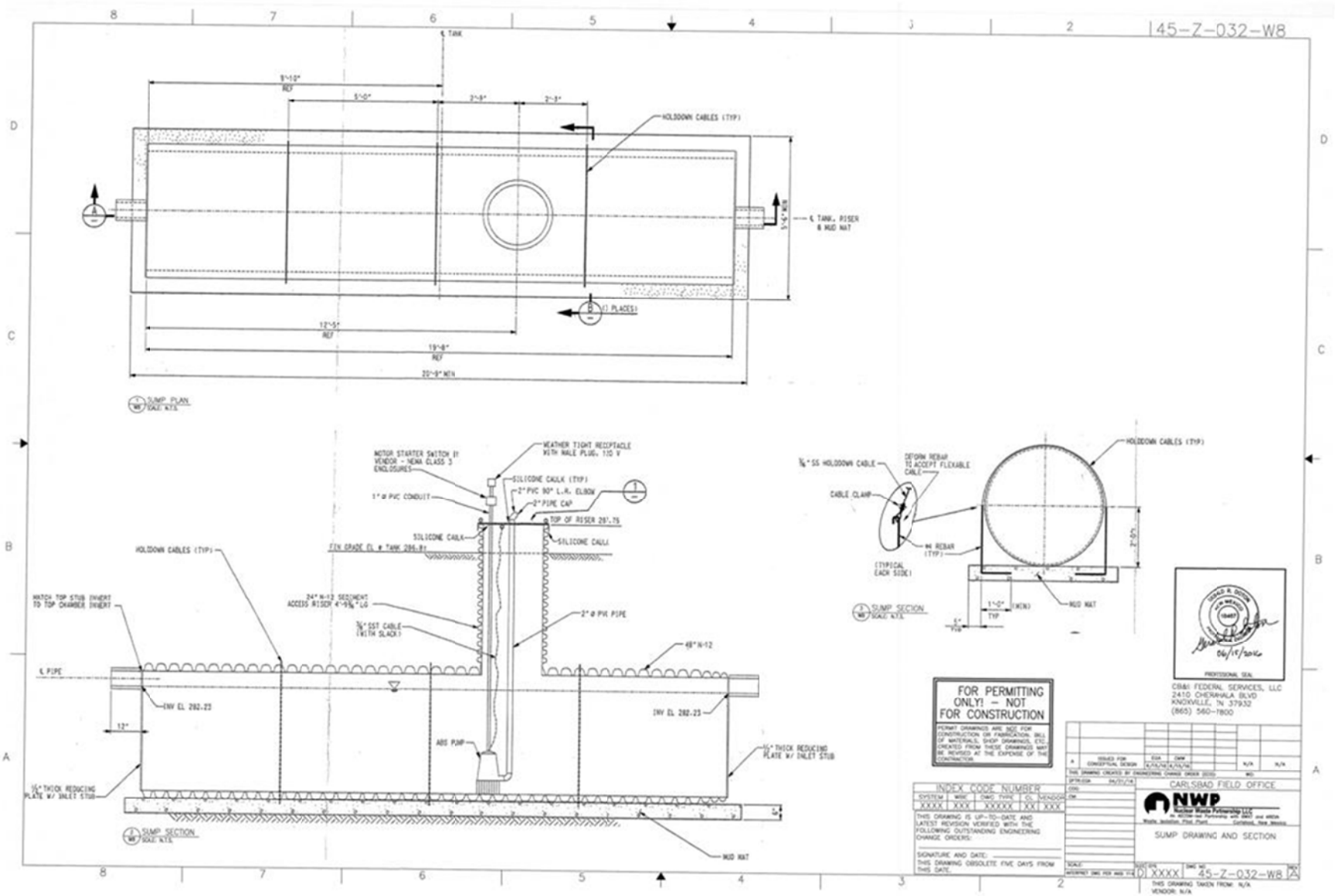
45-Z-032-W8
℄ TANK
9'-10" REF
5'-0"
2'-8"
2'-3"
HOLDOWN CABLES (TYP)
℄ TANK, RISER & MUD MAT
(1 PLACES)
12'-5" REF
19'-8" REF
20'-9" MIN
SUMP PLAN
SCALE: N.T.S.
MOTOR STARTER SWITCH IN VENDOR - NEMA CLASS 3 ENCLOSURES
WEATHER TIGHT RECEPTACLE WITH MALE PLUG, 110 V
SILICONE CAULK (TYP)
1" ø PVC CONDUIT
2" PVC 90° L.R. ELBOW
2" PIPE CAP
TOP OF RISER 287.75
SILICONE CAULK
SILICONE CAULK
FIN GRADE EL @ TANK 286.81
HOLDOWN CABLES (TYP)
MATCH TOP STUB INVERT TO TOP CHAMBER INVERT
24" N-12 SEGMENT ACCESS RISER 4'-9 3/8" LG
3/8" SST CABLE (WITH SLACK)
2" ø PVC PIPE
48" N-12
℄ PIPE
INV EL 282.23
INV EL 282.23
12"
ABS PUMP
1/2" THICK REDUCING PLATE W/ INLET STUB
1/2" THICK REDUCING PLATE W/ INLET STUB
MUD MAT
SUMP SECTION
SCALE: N.T.S.
3/8" SS HOLDOWN CABLE
DEFORM REBAR TO ACCEPT FLEXIBLE CABLE
CABLE CLAMP
#4 REBAR (TYP)
(TYPICAL EACH SIDE)
HOLDOWN CABLES (TYP)
2'-0"
1'-0" (MIN) TYP
MUD MAT
SUMP SECTION
SCALE: N.T.S.
PROFESSIONAL SEAL
06/17/2016
CB&I FEDERAL SERVICES, LLC
2410 CHERAHALA BLVD
KNOXVILLE, TN 37932
(865) 560-7800
FOR PERMITTING ONLY! - NOT FOR CONSTRUCTION
PERMIT DRAWINGS ARE NOT FOR CONSTRUCTION OR FABRICATION. BILL OF MATERIALS, SHOP DRAWINGS, ETC. CREATED FROM THESE DRAWINGS MAY BE REVISED AT THE EXPENSE OF THE CONTRACTOR.
A ISSUED FOR CONCEPTUAL DESIGN
INDEX CODE NUMBER
SYSTEM MISC DWG TYPE CL VENDOR
XXXX XXX XXXXXX XX XXX
THIS DRAWING IS UP-TO-DATE AND LATEST REVISION VERIFIED WITH THE FOLLOWING OUTSTANDING ENGINEERING CHANGE ORDERS:
SIGNATURE AND DATE:
THIS DRAWING OBSOLETE FIVE DAYS FROM THIS DATE.
CARLSBAD FIELD OFFICE
NWP
SUMP DRAWING AND SECTION
D XXXX 45-Z-032-W8 A
THIS DRAWING TAKEN FROM: N/A
VENDOR: N/A

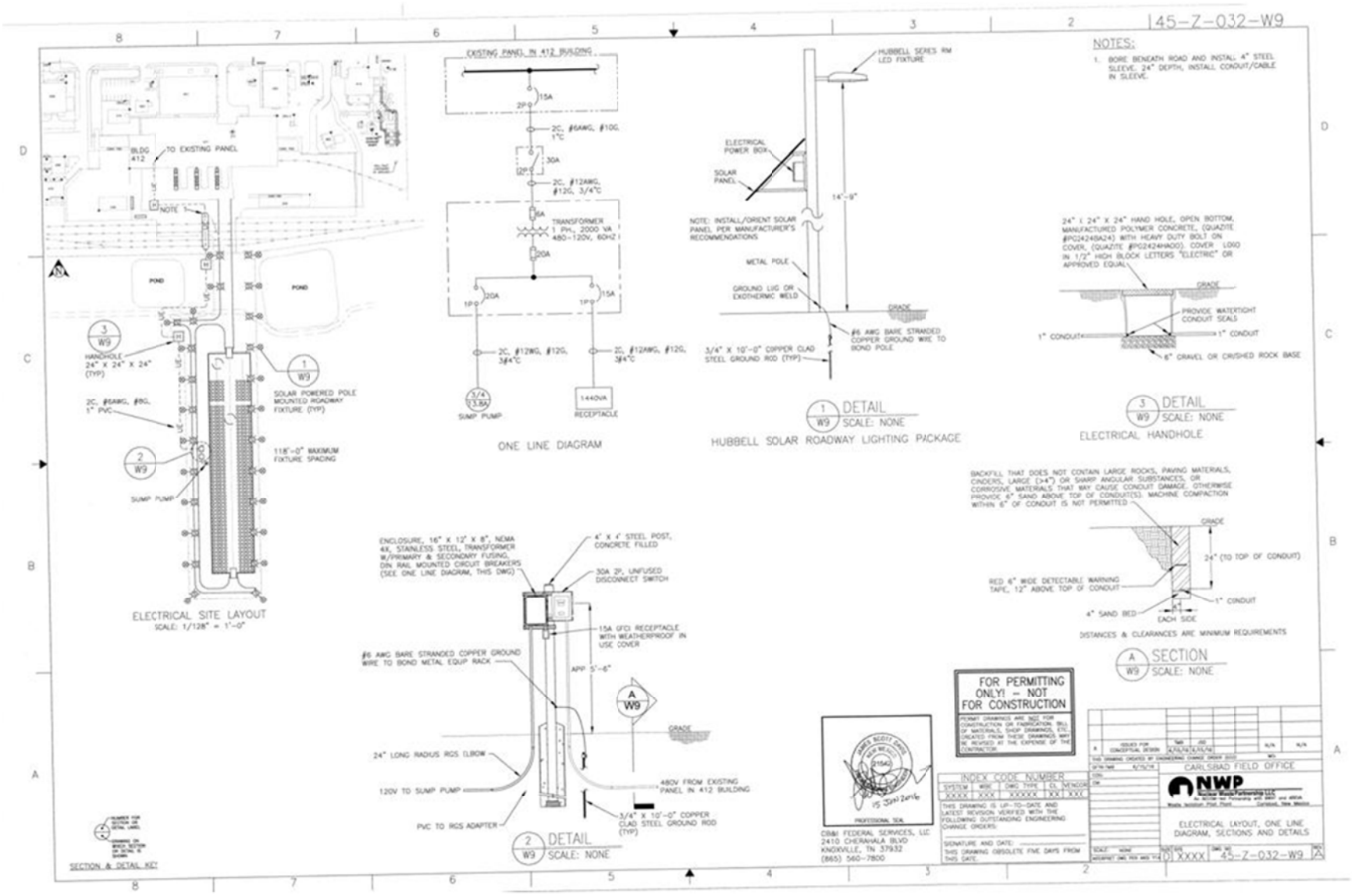
145-Z-032-W9
NOTES:
1. BORE BENEATH ROAD AND INSTALL 4" STEEL SLEEVE. 24" DEPTH, INSTALL CONDUIT/CABLE IN SLEEVE.
BLDG 412
TO EXISTING PANEL
POND
POND
HANDHOLE 24" X 24" X 24" (TYP)
2C, #8AWG, #8G, 1" PVC
SUMP PUMP
SOLAR POWERED POLE MOUNTED ROADWAY FIXTURE (TYP)
118'-0" MAXIMUM FIXTURE SPACING
ELECTRICAL SITE LAYOUT
SCALE: 1/128" = 1'-0"
EXISTING PANEL IN 412 BUILDING
15A
2P
2C, #6AWG, #10G, 1"C
30A
2P
2C, #12AWG, #12G, 3/4"C
6A
TRANSFORMER 1 PH., 2000 VA 480-120V, 60HZ
20A
1P
20A
1P
15A
2C, #12AWG, #12G, 3/4"C
2C, #12AWG, #12G, 3/4"C
SUMP PUMP
1440VA
RECEPTACLE
ONE LINE DIAGRAM
HUBBELL SERIES RM LED FIXTURE
ELECTRICAL POWER BOX
SOLAR PANEL
14'-9"
NOTE: INSTALL/ORIENT SOLAR PANEL PER MANUFACTURER'S RECOMMENDATIONS
METAL POLE
GROUND LUG OR EXOTHERMIC WELD
GRADE
#6 AWG BARE STRANDED COPPER GROUND WIRE TO BOND POLE
3/4" X 10'-0" COPPER CLAD STEEL GROUND ROD (TYP)
DETAIL
SCALE: NONE
HUBBELL SOLAR ROADWAY LIGHTING PACKAGE
24" L 24" X 24" HAND HOLE, OPEN BOTTOM, MANUFACTURED POLYMER CONCRETE, (QUAZITE #PG2424BA24) WITH HEAVY DUTY BOLT ON COVER, (QUAZITE #PG2424HA00). COVER : LOGO IN 1/2" HIGH BLOCK LETTERS "ELECTRIC" OR APPROVED EQUAL
GRADE
PROVIDE WATERTIGHT CONDUIT SEALS
1" CONDUIT
1" CONDUIT
6" GRAVEL OR CRUSHED ROCK BASE
DETAIL
SCALE: NONE
ELECTRICAL HANDHOLE
BACKFILL THAT DOES NOT CONTAIN LARGE ROCKS, PAVING MATERIALS, CINDERS, LARGE (>4") OR SHARP ANGULAR SUBSTANCES, OR CORROSIVE MATERIALS THAT MAY CAUSE CONDUIT DAMAGE. OTHERWISE PROVIDE 6" SAND ABOVE TOP OF CONDUIT(S). MACHINE COMPACTION WITHIN 6" OF CONDUIT IS NOT PERMITTED
GRADE
24" (TO TOP OF CONDUIT)
RED 6" WIDE DETECTABLE WARNING TAPE, 12" ABOVE TOP OF CONDUIT
1" CONDUIT
4" SAND BED
EACH SIDE
DISTANCES & CLEARANCES ARE MINIMUM REQUIREMENTS
SECTION
SCALE: NONE
ENCLOSURE, 16" X 12" X 8", NEMA 4X, STAINLESS STEEL, TRANSFORMER W/PRIMARY & SECONDARY FUSING, DIN RAIL MOUNTED CIRCUIT BREAKERS (SEE ONE LINE DIAGRAM, THIS DWG)
4" X 4" STEEL POST, CONCRETE FILLED
30A 2P, UNFUSED DISCONNECT SWITCH
15A GFCI RECEPTACLE WITH WEATHERPROOF IN USE COVER
#6 AWG BARE STRANDED COPPER GROUND WIRE TO BOND METAL EQUIP RACK
APP 5'-6"
GRADE
24" LONG RADIUS RGS ELBOW
120V TO SUMP PUMP
480V FROM EXISTING PANEL IN 412 BUILDING
PVC TO RGS ADAPTER
3/4" X 10'-0" COPPER CLAD STEEL GROUND ROD (TYP)
DETAIL
SCALE: NONE
SECTION & DETAIL KEY
FOR PERMITTING ONLY! -- NOT FOR CONSTRUCTION
PERMIT DRAWINGS ARE NOT FOR CONSTRUCTION OR FABRICATION. BILL OF MATERIALS, SHOP DRAWINGS, ETC. CREATED FROM THESE DRAWINGS MAY BE REVISED AT THE EXPENSE OF THE CONTRACTOR
PROFESSIONAL SEAL
CB&I FEDERAL SERVICES, LLC
2410 CHERAHALA BLVD
KNOXVILLE, TN 37932
(865) 560-7800
INDEX CODE NUMBER
SYSTEM | WBS | DWG TYPE | CL | SEQUENCE
XXXX | XXX | XXXXXX | XX | XXX
THIS DRAWING IS UP-TO-DATE AND LATEST REVISION VERIFIED WITH THE FOLLOWING OUTSTANDING ENGINEERING CHANGE ORDERS:
SIGNATURE AND DATE:
THIS DRAWING OBSOLETE FIVE DAYS FROM THIS DATE
CARLSBAD FIELD OFFICE
NWP
ELECTRICAL LAYOUT, ONE LINE DIAGRAM, SECTIONS AND DETAILS
SCALE: NONE
SIZE D
XXXX
145-Z-032-W9

Appendix D
Supplemental Information

Design Criteria/Requirements

Item	Design Criteria/Requirement	Source/Reference	Remarks
1.0 General Requirements			
1.1	**Concept Design Alternatives:** **Overpack Storage on a Slab** –This approach will include storage of the TRU waste containers in reinforced concrete over-packs, commonly referred to as culverts.	Analysis of Alternatives For Above Ground Storage Capability for Transuranic Waste (AGSC) at the Waste Isolation Pilot Plant (WIPP) M&O contractor direction	
1.2	**Safety Classification:** The additional storage capability will be designed to operate to all applicable DOE nuclear safety, safeguards and security, and operational safety requirements. The project or series of activities will apply the requirements of DOE-STD-1189-2008 "Integration of Safety into the Design Process" to modify or develop new nuclear safety documentation, and the design and oversight requirements in DOE Order 420.1C Change 1 "Facility Safety." To support the hazard and accident analysis, certain concrete overpack attributes are necessary to ensure that the concrete overpack performs its intended safety significant functions. These overpack attributes are associated with hazards involving impacts, fire, and explosion. The safety functions performed by a closed concrete overpacks are: • The overpacks will provide a secondary confinement for waste and protect the primary waste packages from operational (vehicle crashes, drops), natural phenomena (high winds/tornadoes) and external hazards (lightning protection and radiation shielding). • Do not contribute to the facility fire loading, and protect containers inside from external fires because they are made of non-combustible material. • Provides a thermal barrier to protect internal containers from an external fire and prevents the spread of fire within concrete overpacks. • Do not fail due to internal fires. • Provides confinement during various events where the concrete overpack limits the release of radiological inventory. • Provides a substantial mass to prevent tipping over or sliding during design basis tornado/high wind events. • Do not fail or suffer lid loss due to differential pressures caused by design basis tornadoes or high winds.	Definition from DOE-STD-3009-2014	Use of the Over-packs to satisfy the listed Safety Significant Functions enables the Concrete Slab to be Classified as commercial grade. Non-Safety significant and Non NQA-1 quality construction.

Item	Design Criteria/Requirement	Source/Reference	Remarks
	• Prevents tipping over during a design basis seismic event. • Provides sufficient permeability permeable to prevent the accumulation of hydrogen and VOC concentrations above the LFL inside the overpack and accumulations of any other filtered releases from the primary confinements (waste containers. • Absorbs the energy of an internal explosion or releases the energy by vertical displacement of the drum lid, with no damage to adjacent containers. The most likely missile generated by an internal explosion is an ejected drum lid, which will not penetrate the concrete overpack. • Resists impacts during natural phenomenon hazard events such that a collapse of light and moderate structures or falling structural objects (e.g., light fixtures, cable trays, or conduits) and the collapse of substantial structures have limited impact on the inventory inside the concrete overpack.		
1.3	**Requirements, Codes, And Standards** DOE O 420.1C Attachment 3 for "Safety Class or Safety Significant" SSCs will be reviewed.		
1.4	**Seismic and Other Natural Phenomena Design Categorization** DOE-STD-1189 Appendix A provides seismic design criteria. The capability would be designed that take into account DOE-STD-1020-2012 "Natural Phenomena Hazards Analysis and Design Criteria for Department of Energy Facilities."	CDR project statement of work	Use of the Over-packs to satisfy the listed Safety Significant Functions enables the Concrete Slab to be classified as Conventional Seismic
1.5	Need to comply with a DSA and RCRA hazardous waste permit		Common project practice to ensure quality gradation.
1.6	Enable storage for CH TRU, TRU mixed waste storage, and shielded containers		
2.0 Building Architectural and Structural Design Requirements			
2.1	Capacity to store up to 17 shipments per week, or 3 TRUPACT II containers for up to 8 weeks of storage	Analysis Of Alternatives For Above Ground Storage For Transuranic Waste (AGSC)at the Waste Isolation Pilot Plant (WIPP) M&O contractor direction	The slab will sized to hold up to 408 concrete over-packs.

Item	Design Criteria/Requirement	Source/Reference	Remarks
2.2	Aisles providing area access and egress paths shall be 48 inches minimum.	The Permit states the following requirement for aisle space in the Parking Area Unit 3.1.2.7. Minimum Aisle Space: *The Permittees shall maintain a minimum spacing of 4 ft. (1.2 m) between loaded Contact-Handled Packages.*	RCRA 40 CFR 264.35, Required aisle space state: "The owner or operator must maintain aisle space to allow the unobstructed movement of personnel, fire protection equipment, spill control equipment, and decontamination equipment to any area of facility operation in an emergency, unless it can be demonstrated to the Regional Administrator that aisle space is not needed for any of these purposes."
2.3	Up to 1-year storage time limit (RCRA) Placement of Concrete Overpacks shall facilitate 1st in - 1st out storage sequencing.	Client Request	Concrete Overpacks will be placed in rows four deep. The maximum number of Concrete Overpacks to be moved to access a particular item will only be three.
2.4	Gross Weights: Surface forklifts 26,000 lbs. (CH Bay forklift) Facility Pallet 25,000 lbs. Seven-pack of 55-gallon drums 7,000 lbs. Four-pack of 85-gallon drums 4,500 lbs. Three-pack of 100-gallon drums 3,000 lbs. Ten-drum overpack 6,700 lbs. Standard waste box 4,000 lbs. TRUPACT-II – 13,140 lbs. + 7265 lbs. = 20,405 lbs. Adjustable center of gravity lift fixture = 2500 lbs. TRUPACT-II lid weight - 7500 lbs. Concrete Over pack wt. – Approx. 32,100 lbs. 3 TRUPACT-II containers on transport tractor trailer – 80,000 lbs.	Hazardous waste permit Table A1-2 and page A1-8 U.S. Department of Transportation (DOT) weight restrictions.	
2.5	High Sustainability & LEED Status: While it is assumed that the AGSC project would not seek LEED certification, it is not exempt sustainability requirements.		Sustainable design features will be included where applicable.
2.6	The slab area shall be designed per IBC 2009 and 2012 Life Safety Code.	DOE G 420.1-1A, State of New Mexico Adopted building codes.	14.7.2 NMAC

Item	Design Criteria/Requirement	Source/Reference	Remarks
2.7	The perimeter fence shall be extended to include the new slab. The fence needs to be at least 20 feet from the slab. Access shall be provided through gates in the fence for forklift trucks. Access is required for forklift from the slab area to Waste Handling Building		
2.8	The storage slab will need a raised perimeter, floor drains and a collection tank to control any water incursion.		Ramps will be required for forklift access over curbs.
2.9	Curbing/bollards/rails shall be provided to protect the stored over-packs from a forklift collision.		This will facilitate alignment of overpacks in predetermined locations.
2.10	The slab and access roads are not to be NQA-1 construction. But the slab needs increased QA to control cracks/leaks, etc.		
3.0 Mechanical and Process Requirements			
3.1	The concrete over-pack shall be designed to accommodate the safe use of TRUDOCK lid lifting equipment.	Client operations request	The concrete over-packs are not included in AGSC project scope
3.2	The outside diameter of the over-pack to be no more than 8 feet so they can use the TRUDOCKs in the Waste Handling Building for final unloading.	Client operations request	This dimension sets the geometry of the Slab.
3.3	A mobile platform that will allow personnel safe access to the top of the concrete over-packs shall be provided for use on the slab and in the WHB as required	Client request	
3.4	Floor Drain trenches flow to tanks for sampling and then disposal.	M&O contractor direction	Floor Drains will be normally closed. Provision shall be made to bypass rain water from the sample tank directly to site settling pond when there is no transport storage or handling activity on the storage slab.
3.5	Forklift Truck – “Big Red” T-450S Rated Capacity 45,000-lbs or equivalent.	WIPP M&O direction	See Attachment A
4.0 Modes of Operation			
4.1	Type B shipping packages are delivered to the WHB where they will be unloaded on the existing TRUDOCKs		
4.2	Concrete Overpacks are staged in the WHB by the electric forklift		
4.3	TRU waste is lifted from Type B shipping packages and place directly in to Concrete Overpack by the Bridge crane.		
4.4	The concrete lid is placed on the Concrete Overpack using existing TRUDOCK handling equipment.		Concrete Over-pack lids shall have lifting pockets Identical to TRUPACT

Item	Design Criteria/Requirement	Source/Reference	Remarks
			lids. Conventional lifting hooks are also provided to allow for handling during manufacture and shipping of over-packs.
4.5	Concrete overpack design must allow hydrogen venting to maintain concentration below 4%, prevent the accumulation of other flammable gasses above applicable limits and accumulations of any other filtered releases from the primary confinements (waste containers). The Maximum Radionuclide inventory on the Concrete Over-pack shall 8500 plutonium equivalent curies (PE-Ci)	Design information	The proposed Concrete Over-packs are very close in size (80 in. D x 78 in. H) to design in the reference calculation (72 in. D x 78 in. H). They will have more internal surface area, but will be thicker at 8 in. vs 7 in. at SRS. The Hydrogen venting capability for the proposed design is very close to the SRS. (1.57%).
4.6	Loaded Concrete Overpacks are transported to the Overpack Unit slab by all terrain forklift for storage.		
5.0 Electrical Requirements			
5.1	Electrical power and communications will be needed. Lighting can be solar powered.		Power is provided for the submersible sump pump and service use.
5.2	**Nominal System Voltages:** • 208V/120V Panel boards for general distribution	SDD ED00, Section 1.1	
5.3	Lighting shall be provided for perimeter fencing		
6.0 Fire Protection Requirements			
6.1	The facility will be of noncombustible or limited combustible construction as defined in the IBC. Structural materials will be noncombustible	DOE-STD-1066 DOE O 420.1C	The slab is an outside structure.
6.2	Fire Protection shall be in accordance with applicable NFPA Codes and Standards and the applicable building code.	DOE-STD-1066 DOE O 420.1C	
6.5	A Fire hydrant shall be provided.	DOE-STD-1066	The slab is an outside structure. A fire line shall be provided to feed approximately 500 gpm to the hydrant.

Design Basis Accidents

This section provides the accident analysis for the WIPP facility. Accident analysis entails the formal quantification of a limited subset of accidents otherwise referred to as design basis events (**DBAs**). These accidents represent a complete set of bounding conditions for the WIPP facility. Whenever possible, DBAs are analyzed using the simplest applicable deterministic, phenomenogical calculations. The frequencies for the DBAs analyzed were similarly simplified, when appropriate, by estimating frequencies for initiator or overall sequences for categorizing into broad frequency bins.

Natural Phenomena Hazards (**NPHs**) and external events are special cases. Natural Phenomena Hazards DBAs are those events with a phenomenon initiating frequency as specified in DOE-STD-1020-2012. External events are analyzed as DBAs if their frequency of occurrence is estimated to exceed 1E-06/yr. conservatively calculated, or 1E-07/yr. realistically calculated. The discussion for each DBA includes scenario development, frequency determination, and consequence analysis.

Operational Fires

Two types of operational fires may occur within the WIPP facility: Combustible liquid pool fires and ordinary combustible propagating fires. The most intense and rapid fire is a postulated pool fire. A pool fire is formed when a combustible liquid forms a burning pool that is large enough and sufficiently intense to engulf containers and heat them up rapidly. Rapid heating of containers such as debris waste drums vaporizes some of the organic material in the drums and pressurizes the drum faster than the degrading drum seal can relieve pressure, resulting in ejection of the lid along with some of the waste in the drum. The ejected waste subsequently burns external to the drum. This burning of the loose or unpackaged waste is a major contributor to the radiological source term and subsequent dose. Containers in the pool that heat up less rapidly do not eject their lids, but the pool fire may cause the lid seal to fail, resulting in some of this waste burning also.

A much less rapid and much less intense fire is the propagating fire. This fire is initiated where there are combustible materials within the storage unit. The fire propagates slowly through the unit. As a result, some of the waste can burn. This propagating fire takes place over a much longer time period than pool fire and the waste burns at a slower rate.

Although the large pool fire bounds the offsite consequences for a credible external waste container operational fire, both pool fires and propagating fires represent a significant radiological hazard for facility and site workers. The primary control strategy employed to protect facility and co-located workers in either a pool fire or a propagating fire is to limit the radiological inventory that can be engulfed in a combustible liquid pool. The engineered closed concrete overpacks provide a thermal barrier that limits the radiological inventory available for release during certain accident scenarios thereby limiting the material at risk assumed in the accident analyses by ensuring fire does not propagate to internal material during a fire.

Operational Explosions

Waste containers serve as the primary means for preventing the release of radioactive materials and/or hazardous chemical materials. Under some conditions, unvented or inadequately vented closed waste containers may develop a flammable atmosphere due to the buildup of hydrogen, flammable volatile organic compounds (**VOCs**), or waste decomposition products such as

methane. Containers with high radioactive inventories are of particular concern due to radiolytic generation of hydrogen from hydrogenous material, including water that may be present in the waste container causing energy release through deflagration or detonation. The energy release and the duration of the energy release is a function of the explosive reaction. When the fuel and oxidant are present in a gaseous state, the flammable mixtures deflagrate (fast burning) but under special conditions (proper concentration of the component gases, turbulent mixing, strong ignition source, an adequate length/diameter ratio) a deflagration can transition into a detonation. For the containers, enclosures, and conditions with the WIPP facility, a detonation is not possible; therefore, deflagration events are evaluated.

Waste containers that develop a flammable atmosphere represent a physical and radiological hazard to onsite workers and potentially a radiological hazard to the public during handling and storage. Flammable containers are postulated to deflagrate during routine handling or storage activities, intrusive sampling, and during operational upsets (e.g., container drops).

The closed concrete overpacks are sufficiently permeable to prevent the accumulation of hydrogen concentrations above the lower flammability limit (**LFL**) and accumulation of other flammable gases above applicable limits. The overpack limits the radiological inventory available for release during certain accident scenarios thereby limiting the material at risk assumed in the accident analyses by maintain overpack headspace hydrogen concentrations below LFL to prevent deflagrations for closed overpacks.

Confinement

A performance criterion imposed on the closed concrete overpacks is that it has the ability to absorb or deflect the forces associated with an internal deflagration such that no damage occurs to adjacent containers that results in the release of additional material at risk. This performance criterion is supported in a backfit analysis performed at Savannah River Site in 2005, which is based upon actual concrete overpack testing that measured the consequences of a hydrogen deflagration in an empty overpack. The results of the explosion test performed at SRS in 1986 indicated that when a drum failed, it failed by blowing off the drum lid. The testing also documented the average drum lid velocity as 74 mph, which is insufficient energy to penetrate the concrete overpack lid or wall.

Permeability

A performance criteria imposed on the closed concrete overpacks is that it shall allow hydrogen to migrate through the concrete walls and lid. The permeability of the closed concrete overpacks also allows migration of VOCs through the overpack walls and lid.

Calculation Cover Sheet and Table of Contents

CLIENT: USACE PROJECT NAME: WIPP AGSC	PAGE COUNT SUMMARY	CALC BODY LAST PAGE#
CALCULATION TITLE: Over Pack Storage Slab and Concrete Culvert Conceptual Design	TOTAL CALC BODY PAGES : 23 TOTAL ATTACH. PAGES : 11 **TOTAL PAGES : 34**	23

CALCULATION NUMBER

Project No.		Area Unit ID		Discipline Code		Document Type		Document No.
500405	-	AGS	-	S	-	CAL	-	0001

REVISION HISTORY

REV NO.	REV DATE	PREPARER PRINTED NAME, SIGNATURE & DATE	REVIEWER / CHECKER PRINTED NAME, SIGNATURE & DATE	REVISION DESCRIPTION (See Project Procedure EIP-EN-003 for requirements.) (Add additional pages and reference them as needed.)	CONFIRMATION REQUIRED YES	CONFIRMATION REQUIRED NO
A	04/18/16	D.Dolor	E. Johnston	Conceptual Design	☒	☐
--					☐	☒
--					☐	☐
--					☐	☐

TABLE OF CONTENTS

Section		Page #
1.0	Calculation Cover Sheet	1
2.0	Table Of Contents	2
3.0	Calculation Objective/Purpose	3
4.0	References	3
5.0	Inputs	3
6.0	Assumptions	4
7.0	Basis/Methodology	4
8.0	Confirmations Required	5
9.0	Computer Code Identification	5
10.0	Calculation	5
11.0	Results & Conclusions	5

Attachments	Number of Pages	Last Page Number
A – "Big Red" Truck by Taylor Cut Sheet	5	A5
B – NRC Regulatory Guide 1.76 Figure 1, and Tables 1 & 2	4	B4
C – Spectral Acceleration Parameters	2	C2

3.0 CALCULATION OBJECTIVE/PURPOSE

The purpose of this calculation is to provide conceptual design for a proposed slab-on-grade to be used as Over Pack storage and conceptual design for Closed Concrete Culvert with sufficient structural integrity to resist tipping, sliding, fail or suffer lid loss during an internal explosion, seismic event and tornado at the WIPP Facility, NM.

4.0 REFERENCES

4.1 IBC 2009 International Building Code

4.2 ASCE 7-05 Minimum Design Loads for Buildings and Other Structures

4.3 ACI 318-08 Building Code Requirement for Structural Concrete

4.4 ACI 360-06 Design of Slabs-on-Ground

4.5 UFC 3-320-06A Concrete Floor Slabs on Grade Subjected To Heavy Loads

4.6 PCA Slab Thickness Design for Industrial Concrete Floors on Grade 1983

4.7 NRC Regulatory Guide 1.76 Design-Basis Tornado and Tornado Missiles for Nuclear Power Plants

4.8 NRC NUREG-0800, Section 3.5.3 Barrier Design Procedure

4.9 DR-22-V-01, Rev 2 WIPP Project Soils Design Report

4.10 U.S. Deparment of Energy Order 420.1C

4.11 ANS-2.3 – 2011 estimating tornado, hurricane, and extreme straight line wind characteristics at nuclear facility sites

4.12 DOE-STD-1020-2012 Natural Phenomena Hazards Analysis and Design Criteria for DOE Facilities

4.13 SRS Calculation G-CLC-E-00308 Physical Integrity Calculations for Closed Concrete Culverts or Equivalent Concrete Box Overpacks

5.0 INPUTS

5.1 Dead Load

5.1.1	Concrete	150 pcf

5.2 Wind load

5.2.1	Wind Speed	90 mph
5.2.2	Exposure Category	C
5.2.3	Risk Category	III

5.3 Tornado

5.3.1	Tornado speed	180 mph (Reference 4.11)
5.3.2	Region	III

5.4 Earthquake

5.4.1	Spectral Acceleration parameters	Ss = 0.207, S1 = 0.045 (See Att. C)
5.4.2	Risk Category	III
5.4.3	Site Class	D

5.5 Concrete 4,000 psi

6.0 ASSUMPTIONS

6.1 Soil parameters approximated from DR-22-V-01, Rev 2 WIPP Project Soils Design Report. Allowable Soil Bearing Capacity of 4 KSF and Subgrade Modulus of 100 KCF were assumed. For calculation of Design Spectral Response Acceleration, Site Class 'D' assumed.

6.2 Requirements unique in 2009 New Mexico Building Code and ACI 349 Code Requirements for Nuclear Safety-Related Concrete Structures will be assumed negligible in obtaining preliminary member sizes for this conceptual design and that requirements contained in International Building Code (IBC) 2009 and ACI 318 Building Code Requirements for Structural Concrete will be assumed adequate.

6.3 To determine the required thickness of the slab-on-grade, the "Big Red" truck by Taylor will be assumed as the design vehicle.

6.4 Culvert conceptual reinforcement design does not require review of handling and pressure increase due to internal explosion loads.

7.0 BASIS/METHODOLOGY

Slab-on-Grade - The thickness of the slab-on-grade was obtained using the procedure discussed in UFC 3-320-06A, Chapter 5 using a maximum axle load from the "Big Red" truck of 113 kips (Static with rated load – front) and assuming a soil subgrade modulus of 100 kcf. The thickness of the slab-on-grade was also checked using the PCA Method which is one of the methods recommended in ACI 360-06.

Concrete Culvert – The Concrete Culvert was designed with sufficient structural integrity to not tip, slide, fail, or suffer lid loss during an internal explosion, seismic event, tornado or other Natural Phenomena Hazard (NPH). The Site Design Citeria invokes DOE-STD-1020-2012 for definition of Natural Phenomena Hazard which invokes ANS 2.3 and specifies a maximum 3-sec gust tornado wind speed of 180 mph. ANS 2.3, Table 2 defines the wind event of 180 mph and 0.70 psi pressure drop. ANS 2.3 Table 4 defines the tornado wind generated missiles.

8.0 CONFIRMATIONS REQUIRED

Assumptions listed in Section 6 require confirmation.

9.0 COMPUTER CODE IDENTIFICATION

None.

10.0 CALCULATION

See pages 6 to 23.

11.0 RESULTS & CONCLUSIONS

See slab-on-grade detail on page 12 and the close concrete culvert detail on page 23.

By	Date 03/14/16 Subject	Sheet No. 6 of 23
Checked By	Date	Project No.

SLAB-ON-GRADE

FOR THIS CONCEPT DESIGN THE FOLLOWING ASSUMPTIONS WILL BE MADE TO DETERMINE THE THICKNESS OF THE SLAB-ON-GRADE:

1. DESIGN FORK LIFT:
   DESIGN FORK LIFT WILL BE BASED ON TAYLOR "BIG RED" T-450S/T-520S TRUCK, SEE ATTACHMENT.
2. SOIL INFORMATION:
   SIMILAR TO THE WIDP FILTRATION BUILDING CONCEPT DESIGN THE FOLLOWING SOIL PARAMETERS WILL BE USED.
   a. ALLOW. SOIL BEARING CAPACITY = 4,000 PSF
   b. SUBGRADE MODULUS = 100 KCP OR 58 PCI
3. CONCRETE STRENGTH
   $f'c = 4{,}000$ psi

MAXIMUM AXLE LOAD (SEE ATTACHMENT)

$W = 112{,}290$ lbs SAY 113,000 lbs

CONCRETE FLEXURAL STRENGTH (MODULUS OF RUPTURE):

$f_r = 9\sqrt{f'c}$ (ACI 360-10, SECTION A4.2)

$= 9\sqrt{4000}$

$= 569.20$ psi

By	Date 03/14/16 Subject	Sheet No. 7 of 23
Checked By	Date	Project No.

UFC 3-320-06A METHOD (CHAP. 5, REF. 4.5)

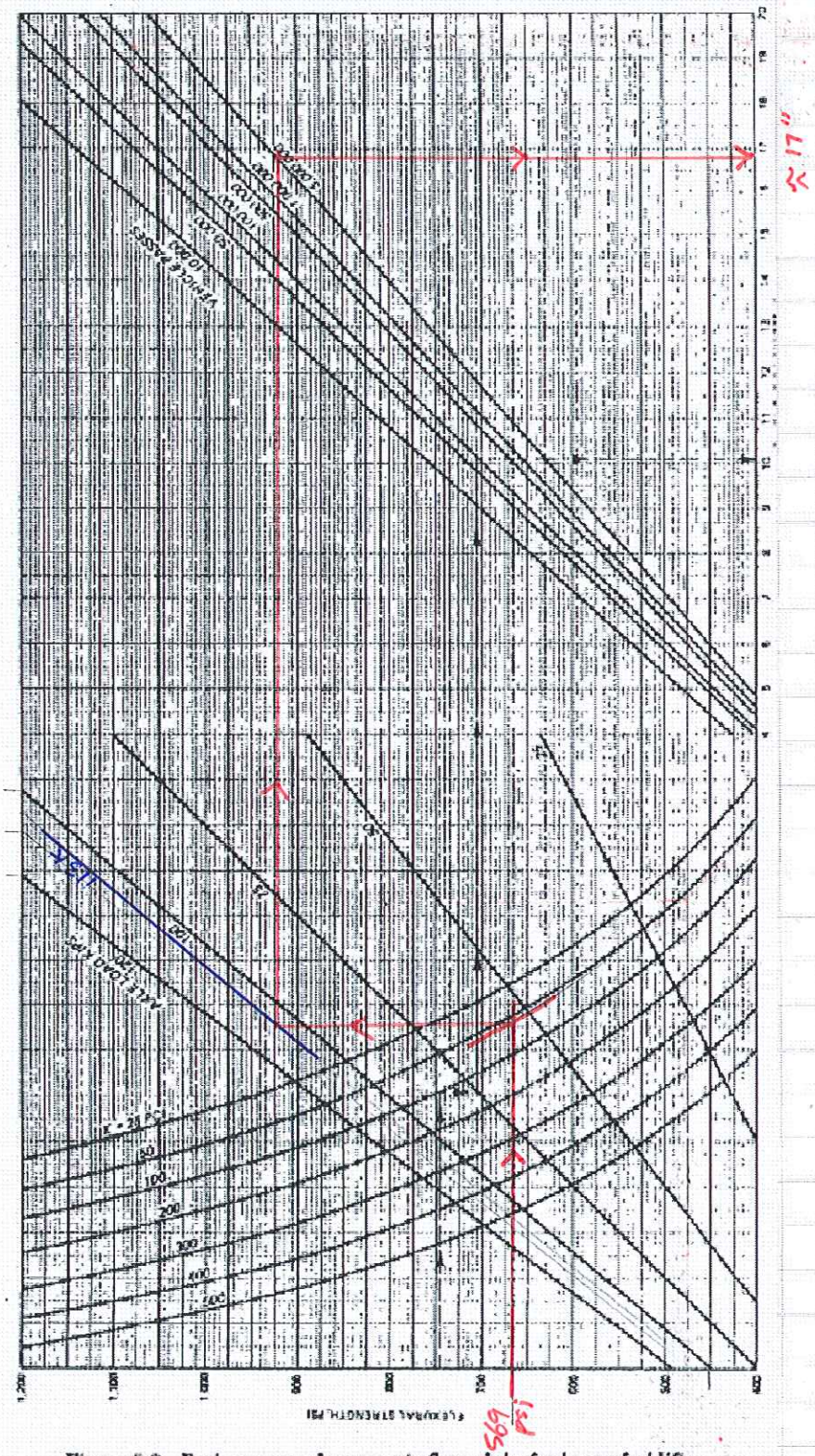

Figure 5-2. Design curves for concrete floor slabs for heavy forklifts.

By	Date 03/14/16 Subject	Sheet No. 8 of 23
Checked By	Date	Project No.

TRY 14" REINF. CONC., $A_s = 0.72\ in^2/FT$

USING #7, $s = \frac{0.60(12)}{0.72} = 10"$

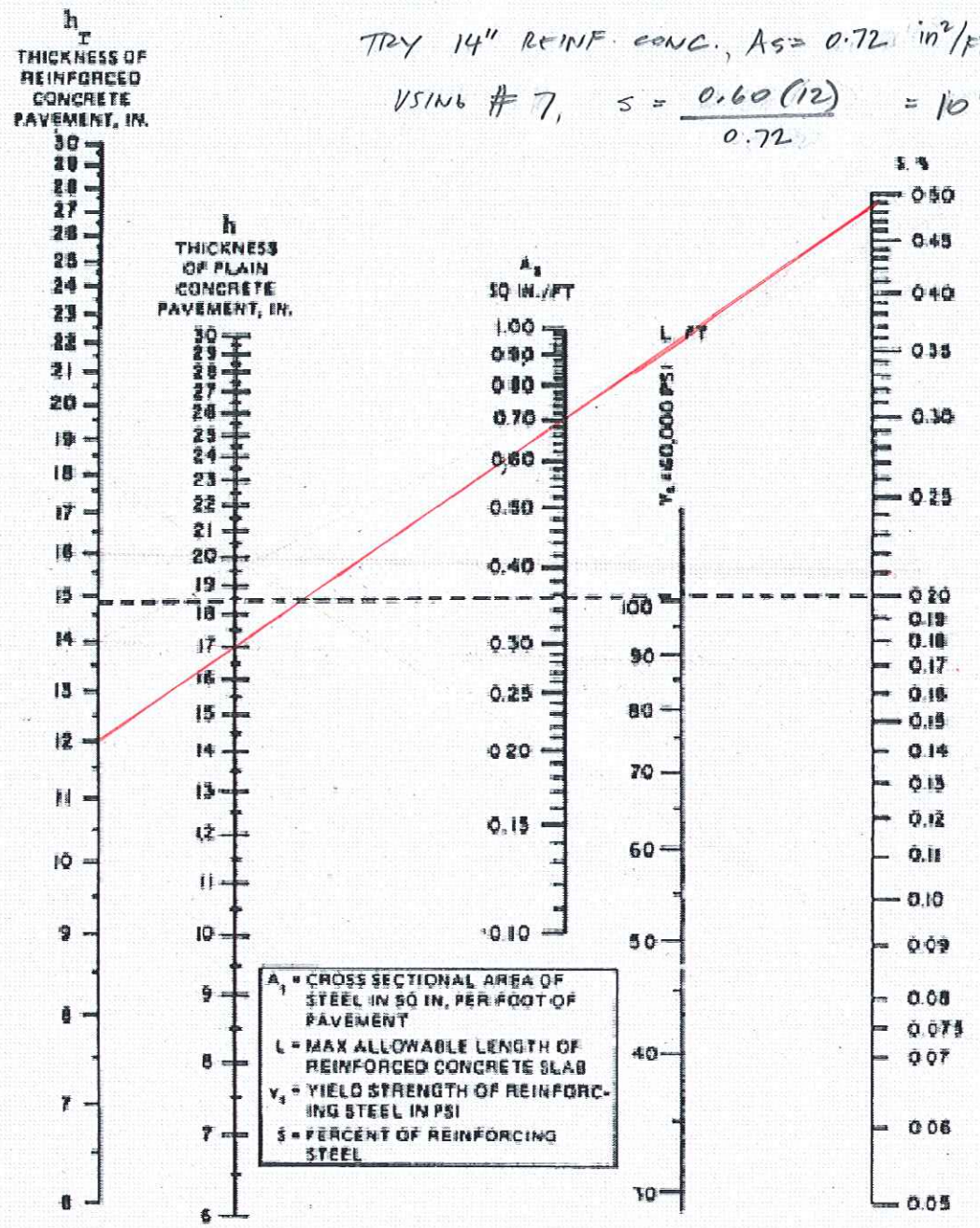

REINFORCED CONCRETE PAVEMENT DESIGN

NOTE: MINIMUM THICKNESS OF REINFORCED CONCRETE FLOOR SLABS WILL BE 6 IN.

∴ 1'-0" THK CONC. SLAB w/ #7@10" T&B E.W. REINF.

Figure 5-4. Design thickness for reinforced floor slabs.

3

By	Date 03/30/16 Subject	Sheet No. 9 of 23
Checked By	Date	Project No.

PCA METHOD

REF: ACI 360-10, APPENDIX 1

DESIGN VEHICLE - "BIG RED" T-450S/T-520S TRUCK BY TAYLOR

AXLE LOAD (FRONT, LOADED) - 113 K

WHEEL SPACING:

$S_D = 18''$ (ASSUME)

$S = 104.5''$

NOS. OF TIRES ON FRONT AXLE = 4

TIRE INFLATION ASSUME 250 psi (CONSERVATIVE PER PCA TABLE 3)

$$\text{TIRE CONTACT AREA} = \frac{\text{WHEEL LOAD}}{\text{INFLATION PRESSURE}}$$

$$= \frac{113{,}000/4 \text{ TIRES}}{250 \text{ psi}}$$

$$= 113 \text{ in}^2$$

TO BE CONSERVATIVE, USE TIRE CONTACT AREA OF 100 in^2

MODULUS OF RUPTURE, f_r:

ACI 360-10 SECTION A4.2 USES A $f_r = 9\sqrt{f'_c}$

$$f_r = 9\sqrt{4000} = 570 \text{ psi}$$

CONCRETE WORKING STRESS, WS:

$$WS = \frac{f_r}{SF} = \frac{570}{1.4} = 407.14 \text{ psi}$$ PER PCA SF = 1.4 TO 2.0

By	Date 03/30/16 Subject	Sheet No. 10 of 23
Checked By	Date	Project No.

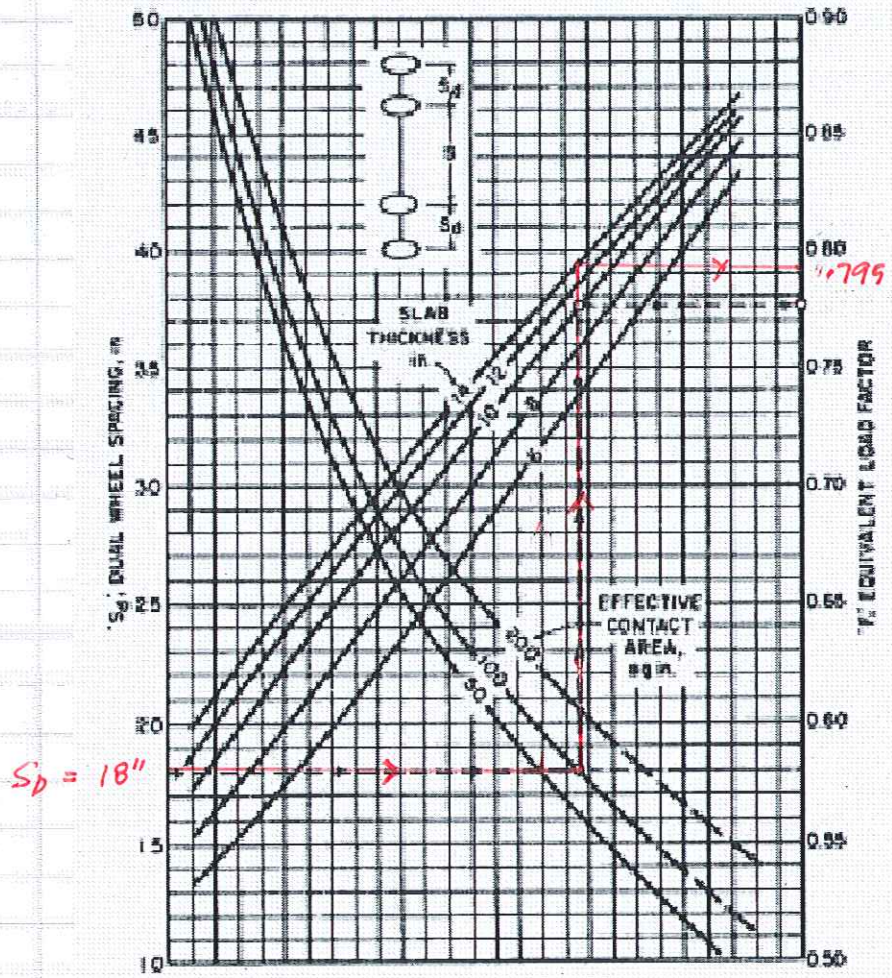

(ASSUME t = 14")

Fig. A1.3—The PCA design chart for axles with dual wheels.

FROM FIG A1.3 ABOVE THE EQUIV. SINGLE-WHEEL AXLE LOAD FACTOR, F = 0.795

= 0.795 × 113 K

= 89.8 K

By	Date 03/30/16 Subject	Sheet No. 11 of 23
Checked By	Date	Project No.

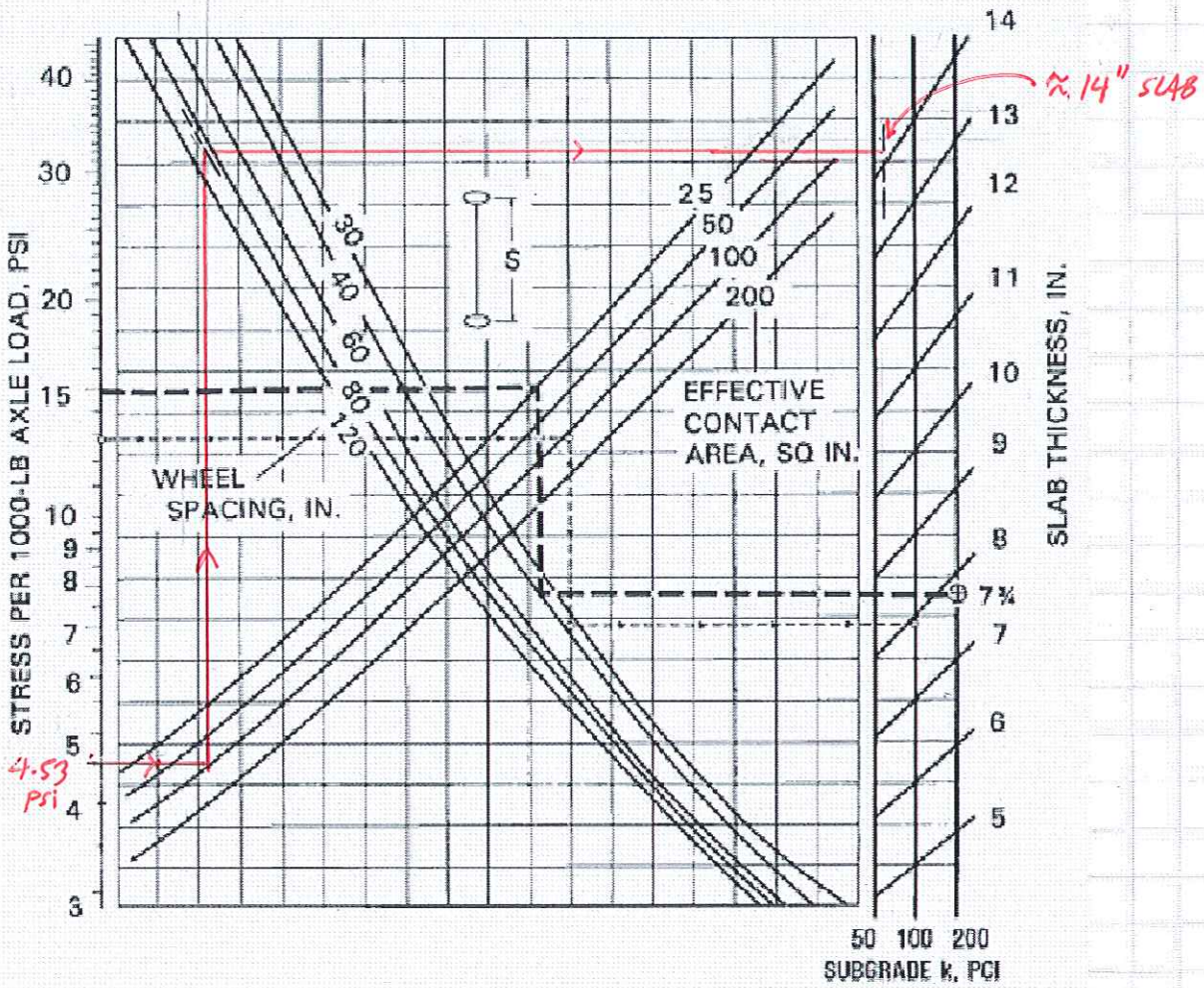

Fig. A1.1—The PCA design chart for axles with single wheels.

SLAB STRESS PER 1000 lb OF AXLE LOAD:

$$= \frac{WS}{\text{AXLE LOAD}}$$

$$= \frac{407.14}{89.8}$$

$$= 4.53 \text{ psi}$$

SUBGRADE MODULUS ASSUME @ 100 KCF OR 58 pci

FROM FIG. A1.1 $t \approx 14''$

THICKNESS DERIVED USING PCA METHOD IS UNREINFORCED. BY INSPECTION, REINFORCED THICKNESS OF 1'-0" W/ #7@10" T&B.E.W. REINF. DERIVED USING UFC MTD. IS OKAY

By	Date 03/30/16 Subject	Sheet No. 12 of 23
Checked By	Date	Project No.

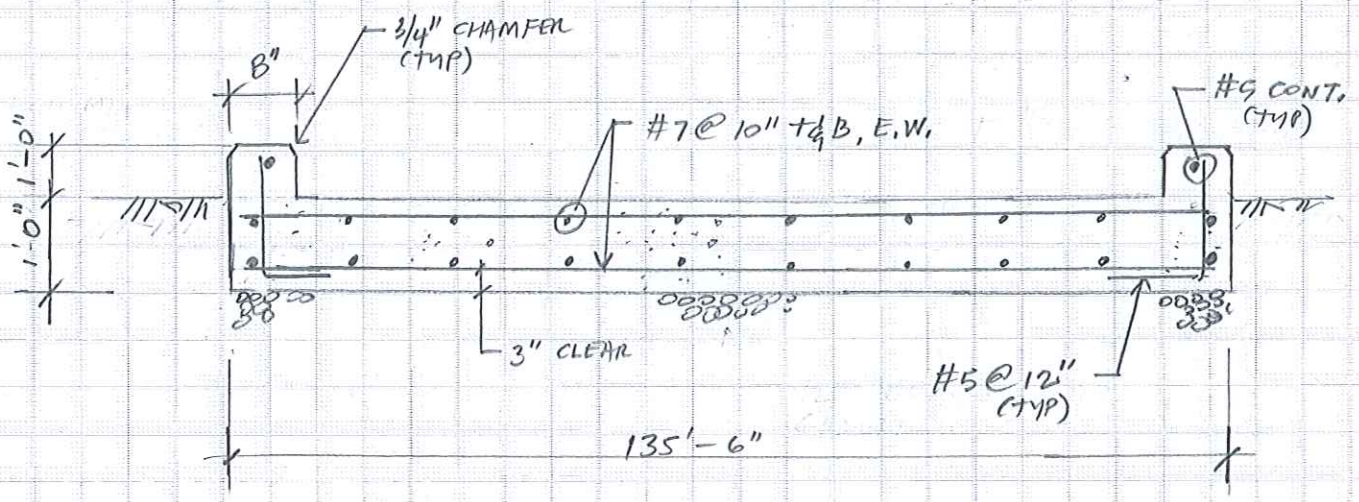

SLAB-ON-GRADE DETAIL

N.T.S.

By	Date 03/31/16 Subject	Sheet No. 13 of 23
Checked By	Date	Project No.

CONCRETE CULVERT

THIS CALCULATION ADDRESSES THE STRUCTURAL INTEGRITY REQMNTS FOR A CONCRETE CULVERT OVERPACK. THE CONCRETE CULVERT MUST BE DESIGNED/FABRICATED WITH SUFFICIENT STRUCTURAL INTEGRITY TO NOT TIP, SLIDE, FAIL OR SUFFER LID LOSS DURING AN INTERNAL EXPLOSION, SEISMIC EVENT & TORNADO.

CONCRETE CULVERT DIMENSIONS:

OUTER DIAMETER = 8.0' OR 96"
HEIGHT = 8.0' OR 96"
WALL THICKNESS = 8"
COVER THICKNESS = 8"

1. ASSESMENT OF CULVERT SLIDING DURING TORNADO:

TORNADO SPEED = 180 MPH (REF. 4.9)

$K_z = 0.85$ VELOCITY PRESSURE EXP. COEFF.
$K_d = 0.95$ WIND DIRECTIONALITY FACTOR
$K_{zt} = 1.0$ TOPOGRAPHIC FACTOR
$I = 1.15$ IMPORTANCE FACTOR
$G = 0.85$ GUST EFFECT FACTOR

VELOCITY PRESSURE, $q = 0.00256\, K_z\, K_{zt}\, K_d\, V^2 I$

$= 0.00256(0.85)(1.0)(0.95)(180)^2(1.15)$

$= 77$ PSF

FORCE COEFF, C_f:

$D\sqrt{qz} = 8.0'\sqrt{77} = 70 > 2.5$

$h/D = 8.0'/8.0' = 1.0$

$C_f = 0.50$ USE MODERATELY SMOOTH

By	Date 03/31/16 Subject	Sheet No. 14 of 23
Checked By	Date	Project No.

DESIGN WIND PRESSURE, F:

$F = q_z G C_f A_f$

$= 77 (0.85)(0.5)(8.0' \times 8.0')$

$= 2094.4$ lbs SAY 2,100 lbs

MIN. FORCE REQ'D FOR CULVERT TO SLIDE

$F_f = F_N \mu$ F_N = NORMAL FORCE EQUAL TO WEIGHT OF CULVERT

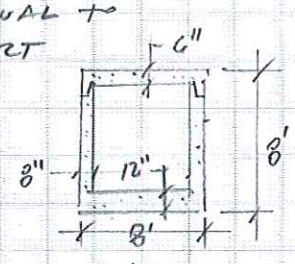

VOL. OF CYLINDER, $V = \pi r^2 h$

$V_{BIG} = \pi (4)^2 (8.0) = 402.12$ CF

$V_{SMALL} = \pi (3.33)^2 (6.5) = 226.44$ CF 8" THK. WALL

$V_{NET} = 402.12 - 226.44 = 175.68$ CF

$F_n = 150$ PCF $(175.68) = 26352$ lbs

μ = COEFF. OF FRICTION FOR CONC. ON CONC. = 0.30 (REF. 4.13)

$F_f = 26,352 (0.30) = 7905$ lbs $>$ F OK

$FS = \frac{7905}{2100} = 3.76$

THEREFORE, CULVERT WILL NOT SLIDE

2. ASSESSMENT OF CULVERT TIPPING DURING TORNADO:

$F = 2,100$ lbs

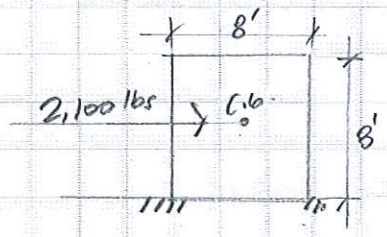

MOMENT APPLIED BY WIND:

$M_w = F (\frac{1}{2} H)$

$= 2100 (4.0')$

$= 8400$ FT-lbs

By	Date 04/01/16 Subject	Sheet No. 15 of 23
Checked By	Date	Project No.

RESISTING MOMENT:

$$M_R = W\left(\frac{D}{2}\right)$$

$$= 26{,}352\left(\frac{8.0'}{2}\right)$$

$$= 105{,}408 \text{ ft-lbs} > M_W \quad \underline{\underline{OK}}$$

$$FS = \frac{105{,}408}{8{,}400} = 12.6$$

THEREFORE, CULVERT WILL NOT OVERTURN

3. ASSESSMENT OF CULVERT LID LOSS DURING TORNADO:

PER ANS 2.3-2011 (REFERENCE 4.11) THE MAXIMUM PRESSURIZATION CHANGE WITH TORNADO (REGION III) IS 0.70 psi OR 100.80 PSF SAY 102 PSF

TOTAL LIFTING FORCE ON LID

$$F = (\Delta P)A$$

$$A = \frac{\pi}{4}(I.D.)^2 = \frac{\pi}{4}(6.67')^2 = 34.94 \text{ SF SAY } 35 \text{ SF}$$

$$F = (102 \text{ PSF})(35 \text{ SF}) = 3570 \text{ lbs}$$

WEIGHT OF LID:

$$V = \frac{\pi}{4}(d)^2 t_{LID}$$

$$= \frac{\pi}{4}(8)^2\left(\frac{8}{12}\right)$$

$$= 33.5 \text{ CF}$$

$$W = 150 \frac{lb}{ft^3}(33.5) = 5025 \text{ lbs} > F \quad \underline{OK}$$

$$FS = \frac{5025}{3570} = 1.41$$

THEREFORE, LID WILL NOT LIFT OFF DURING TORNADO

By	Date 04/01/16 Subject	Sheet No. 16 of 23
Checked By	Date	Project No.

4. ASSESSMENT OF CULVERT TIPPING DURING SEISMIC EVENT:

SPECTRAL ACCELERATION PARAMETERS

$S_S = 0.207$ (SEE ATT. C)

$S_1 = 0.045$

SITE COEFFICIENTS

$F_a = 1.6$

$F_v = 2.4$

$S_{MS} = F_a S_S = 0.331$

$S_{M1} = F_v S_1 = 0.108$

DESIGN SPECTRAL ACCELERATION

$S_{DS} = 2/3\, S_{MS} = 0.221g$ ← USE

$S_{D1} = 2/3\, S_{M1} = 0.072g$

$F_H = 0.221 W = 0.221(26{,}352) = 5824$ lbs

$F_V = 0.20 S_{DS} W = 0.20(0.221)(26{,}352) = 1165$ lbs

ASSUME C.G. @ MID HEIGHT.

$M_{SEISMIC} = 5824\left(\frac{8.0'}{2}\right) + 1165\left(\frac{8.0}{2}\right) = 27{,}956$ FT-lbs

RESISTING MOMENT:

$M_R = W\left(\frac{D}{2}\right) = 26{,}352\left(\frac{8.0'}{2}\right) = 105{,}408$ FT-lbs

$> M_{SEISMIC}$

OK

$FS = \frac{105{,}408}{27{,}956} = 3.77$

THEREFORE, CULVERT WILL NOT OVERTURN

5. ASSESSMENT OF CULVERT SLIDING DURING SEISMIC:

SLIDING FORCE, $F = 5,824$ lbs
(PREVIOUS PAGE)

SLIDING RESISTANCE, $F_f = W\mu$
$= 26,352(0.30)$
$= 7,905$ lbs $> F$ OK

$FS = \frac{7905}{5824} = 1.36$

THEREFORE, CULVERT WILL NOT SLIDE

6. ASSESMENT OF CULVERT FOR TORNADO MISSILE IMPACT:

PER ANS 2.3-2011 THE DESIGN BASIS TORNADO MISSILE SPECTRUM (REGION III):

6.1 A 6" ϕ 287 lbs SCHED 40 PIPE TRAVELLING AT 72MPH (105.6 FT/S)
6.2 A 1" ϕ 0.147 lbs SOLID STEEL SPHERE AT 18MPH (26.4 FT/S)
6.3 A 4000 lbs AUTOMOBILE TRAVELLING AT 72MPH (105.6 FT/S)

PERFORATION DEPTH OF A MISSILE INTO A CONCRETE WALL ARE APPROXIMATED BY SEVERAL EMPIRICAL EQUATIONS, ONE OF WHICH IS THE MODIFIED NATIONAL DEFENSE RESEARCH COUNCIL (NRDC) FORMULA WHICH IS RECOMMENDED IN NRC NUREG-0800.

PENETRATION DEPTH, X:

$$X = \left[4KNWd\left[\frac{V}{1000d}\right]^{1.8}\right]^{0.50} \quad \text{FOR } \frac{X}{d} \leq 2.0$$

$$X = KNW\left[\frac{V}{1000d}\right]^{1.8} + d \quad \text{FOR } \frac{X}{d} > 2.0$$

By	Date 04/01/16 Subject	Sheet No. 18 of 23
Checked By	Date	Project No.

6.1. MISSILE TYPE – 6" ϕ SCHED. 40 PIPE:

$W = 287$ lbs — MISSILE WT.
$d = 6.625$ in — DIAMETER
$N = 0.84$ — SHAPE FACTOR
$f_{ic} = 4$ ksi — CONC. STRENGTH
$V = 180$ MPH — TORNADO SPEED

0.72 FLAT
1.0 SPHERICAL END
0.84 BLUNT END
1.14 VERY SHARP END

HORIZONTAL IMPACT VELOCITY, V_{mh}:
PER ANS 2.3 – 1983

$$V_{mh} = 0.40V = 0.40(180) = 72 \text{ MPH OR } 105.6 \text{ FT/s}$$

MAT'L COEFF. FOR PENETRATION, k:

$$k = 180/\sqrt{f_{ic}} = 2.846$$

ASSUME $x/d < 2.0$

$$x = \left[4(2.846)(0.84)(287)(6.625)\left[\frac{105.6}{1000(6.625)}\right]^{1.8}\right]^{0.50}$$

$$= 3.25''$$

$x/d = 3.49 < 2.0$ CORRECT ASSUMPTION

$x = 3.25''$ THICKNESS OF WALL PROVIDED IS 8" OK

By	Date 04/01/16 Subject	Sheet No. 19 of 23
Checked By	Date	Project No.

6.2 MISSILE TYPE - 1" ϕ SOLID STEEL SPHERE

$W = 0.147$ lbs

$d = 1.0$ in

HORIZ. IMPACT VELOCITY, V_{mh}:

$V_{mh} = 0.10V = 0.10(180) = 18$ MPH OR 26.4 FT/S

MATL COEFF., k:

$k = 180/\sqrt{f'_c} = 2.846$

ASSUME $X/d < 2.0$

$$X = \left[4(2.846)(1)(0.147)(1.0)\left[\frac{26.4}{1000(1)}\right]^{1.8}\right]^{0.50}$$

$= 0.049''$

$X/d = 0.049 < 2.0$ CORRECT ASSUMPTION

$X = 0.049''$ THICKNESS OF WALL IS 8" OK

By	Date 04/01/16 Subject	Sheet No. 20 of 23
Checked By	Date	Project No.

6.3. MISSILE TYPE - 4000 lbs AUTOMOBILE

PER ANS 2.3 THE CONTACT AREA OF A 4,000 lbs AUTOMOBILE CAN BE TAKEN AS 20 FT^2 W/C EQUATES TO 5.05' OR 60.6" DIAMETER AREA

$W = 4{,}000$ lbs
$d = 60.6$

HORIZ. IMPACT VELOCITY, V_{mh}:

$V_{mh} = 0.40V = 72$ MPH OR 105.6 FT/S

MAT'L COEFF, $K = 2.846$

ASSUME $X/d < 2.0$:

$$X = \left[4(2.846)(0.72)(4000)(60.6)\left[\frac{105.6}{1000(60.6)}\right]^{1.8}\right]^{0.50}$$

$= 4.64"$

$X/d = 0.08 < 2.0$ CORRECT ASSUMPTION

$X = 4.64"$ THICKNESS OF WALL IS 8" OK

8

By	Date 04/01/16 Subject	Sheet No. 21 of 23
Checked By	Date	Project No.

6.4 ASSESSMENT OF CULVERT TO RESIST INTERNAL EXPLOSION:

SRS PHYSICAL INTEGRITY CALCULATIONS FOR CLOSED CONCRETE CULVERTS OR EQUIVALENT CONCRETE BOX OVERPACKS CALC NOS. G-CLC-E-00308 USED A DRUM LID EJECTION VELOCITY OF 74 MPH (108.5 FT/S). FOR THIS CONCEPT THE SAME EJECTION VELOCITY WILL BE ASSUMED.

DRUM LID RADIUS = 12"

LID THICKNESS = 0.0635" (ASSUME 16 GA)

DENSITY OF STEEL, ρ = 490 lbs/FT^3

WEIGHT OF LID, $W = \pi(12)^2(0.0635)\left(490 \frac{\text{lbs}}{\text{FT}^3} \times \frac{1\text{ FT}^3}{1728\text{ in}^3}\right)$

$= 8.2$ lbs SAY 10 lbs

MAT'L COEFF, K = 2.846

ASSUME X/d < 2.0:

$$X = \left[4(2.846)(0.72)(10)(24)\left[\frac{108.5}{1000(24)}\right]^{1.8}\right]^{0.50}$$

$= 0.34"$

X/d = 0.014 < 2.0 CORRECT ASSUMPTION

X = 0.34" THICKNESS IS 8" ok

By	Date 04/01/16 Subject	Sheet No. 22 of 23
Checked By	Date	Project No.

WALL REINFORCEMENT:

PROVIDED MIN. REINF PER ACI 318; CHAPTER 14.

VERTICAL REINF. PER 1 FT STRIP:

$$A_{ST} = 0.0012(12)(8)\left(\tfrac{1}{2} - 2\ \text{FACE}\right)$$
$$= 0.058 \quad in^2/FT$$

USING #3 bar: $A_{\#3} = 0.11\ in^2$

$$S = \frac{A_{s\,prov}(12)}{A_{ST}} = \frac{0.11(12)}{0.058} = 22.8''$$

HORIZ. REINF. PER 1-FT STRIP:

$$A_{ST} = 0.0020(12)(8)\left(\tfrac{1}{2}\right)$$
$$= 0.096 \quad in^2/FT$$

USING #3 bar:

$$S = \frac{0.11(12)}{0.096} = 13.8''$$

USE #3 @ 6" E.W. E.F. REINF FOR WALL & LID.

NOTE: CONCRETE CULVERT WAS NOT CHECKED FOR INCREASED PRESSURE DURING INTERNAL EXPLOSION AS WELL AS ADD'L STRESSES WHEN CULVERT IS BEING TRANSPORTED BY FORK LIFT (UNBALANCED DRUM LOADS, CONC. FORCE ON FORK LIFT POCKET). THESE REQUIRE DETAILED ENG'G AND IS OUTSIDE THE SCOPE FOR OF THIS CONCEPT DESIGN.

By	Date 04/01/16 Subject	Sheet No. 23 of 23
Checked By	Date	Project No.

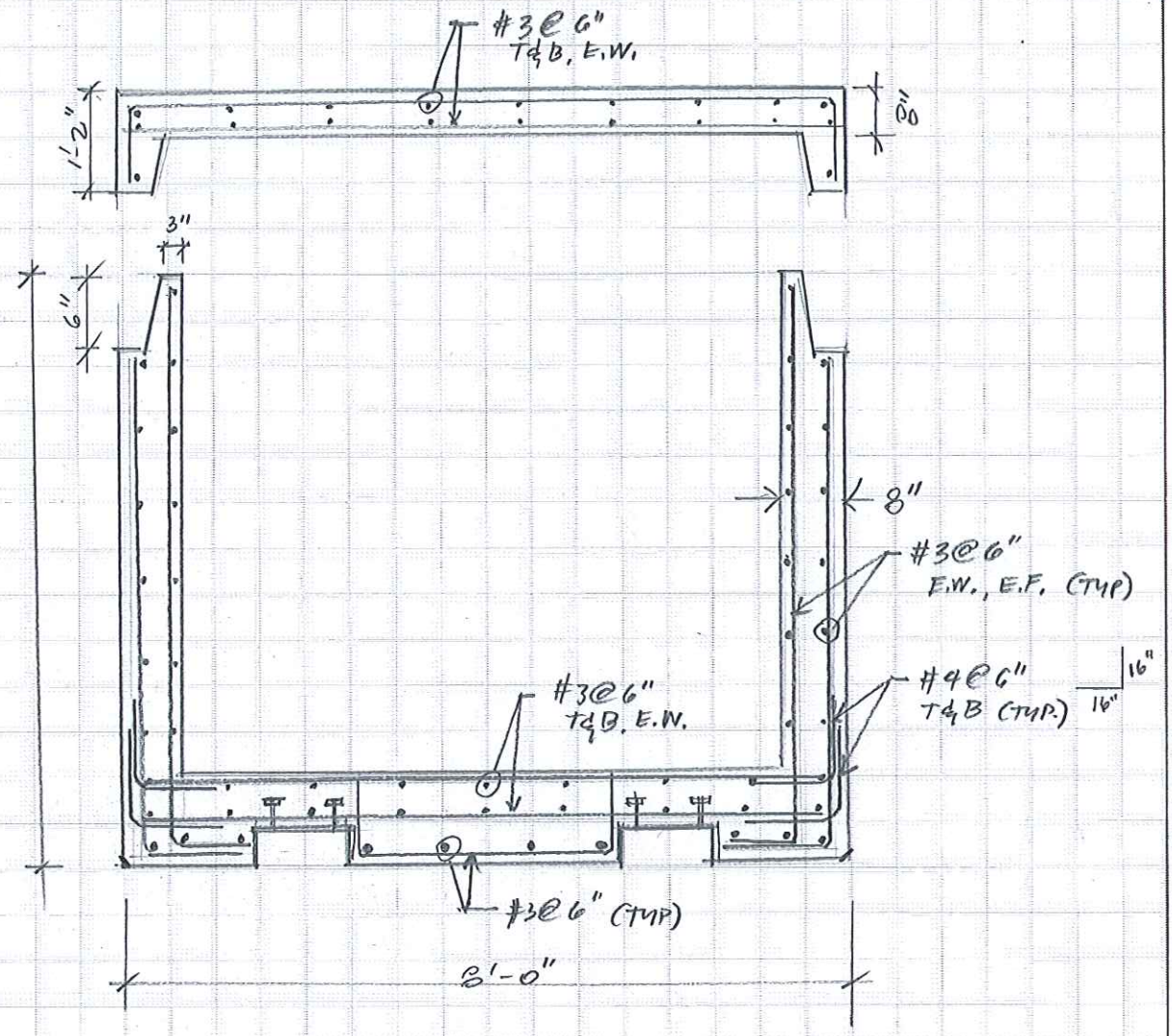

WIPP Above Ground Storage Capability (AGSC)

Attachment A: "Big Red" Truck by Taylor Cut Sheet

A2

"Big Red"
T-450S / T-520S

Taylor Industrial Trucks
Standard Specifications

T-450S Rated Capacity 45,000-lbs. (20,412 kg)
T-520S Rated Capacity 52,000-lbs. (23,587 kg)

36-in. (914 mm) Load Center
130-in. (3,302 mm) Wheelbase

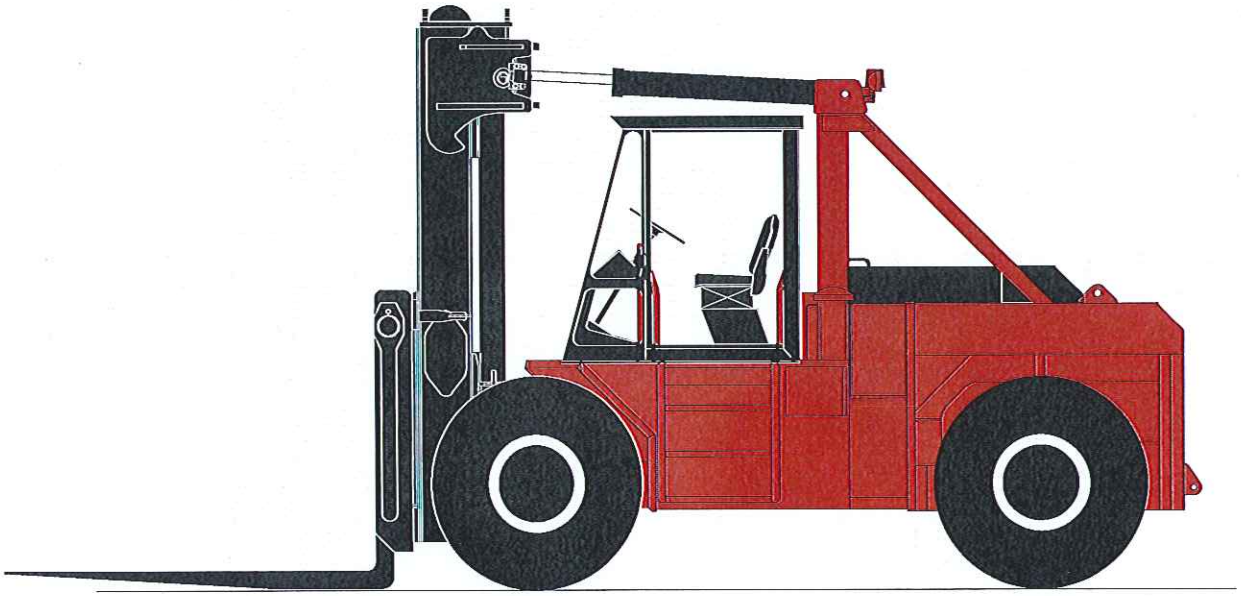

"Big Red" T-450S / T-520S

GENERAL	1	Manufacturer	Manufacturer's Name		TAYLOR		TAYLOR	
	2	Model	Manufacturer's Designation		T-450S		T-520S	
					English	Metric	English	Metric
	3	Capacity	Rated Capacity	lb (kg)	45,000	20,412	52,000	23,587
	4	Load Center	Distance	in (mm)	36	914	36	914
	5	Power Type	Gas, LPG, Or Diesel		Diesel		Diesel	
	6	Tire Type	Cushion, Pneumatic Front / Rear		Pneumatic / Pneumatic		Pneumatic / Pneumatic	
	7	Wheels	Number (X = Driven) Front / Rear		4X / 2		4X / 2	
DIMENSIONS	8	Upright Lift	Standard Lift (Top Of Fork)	in (mm)	136.5	3,467	137	3,480
	9	Forks	Thickness	in (mm)	4.5	114	5	127
	9A		Width	in (mm)	8.5	216	10	254
	9B		Length	in (mm)	72	1,829	72	1,829
	10	Tilt Angle	Standard Upright - Forward / Backward	deg.°	15 / 10		15 / 10	
	11	Overall Dimensions	Length To Face Of Forks	in (mm)	211	5,359	212.25	5,391
	12		Width (Standard Tires)	in (mm)	120	3,048	120	3,048
	13		Height, Standard Upright Lowered	in (mm)	155	3,937	155	3,937
	14		Height, Standard Upright Extended	in (mm)	221	5,613	221	5,613
	15		Height To Top Of Counterweight	in (mm)	72	1,829	72	1,829
	16		Height To Top Of A-Frame	in (mm)	129	3,277	129	3,277
	17	Turning Radius	Minimum Outside	in (mm)	198	5,029	198	5,029
	17A		Minimum Inside	in (mm)	15	381	15	381
	18	Load Distance	Center Of Wheel To Face Of Forks	in (mm)	40.75	1,035	42.25	1,073
	19	Aisle Width	(Add Load Length For 90° Stacking)	in (mm)	238.75	6,064	240.25	6,102
PERF †	20	Stability	Comply With ANSI?		Yes		Yes	
	21	Speeds	Travel Speed - Maximum Forward	mph (km/h)	15.7	25.3	15.7	25.3
	22		Lift Speed - No Load	fpm (m/s)	56	0.28	56	0.28
	22A		Lift Speed - With Load	fpm (m/s)	49	0.25	49	0.25
	23		Lowering Speed - No Load / With Load	fpm (m/s)	60	.3	60	.3
	24	Drawbar Pull	Powershift (Maximum At Stall)	lb (kN)	35,425	158	35,300	157
	25	Gradeability	Powershift (Maximum At Stall) No Load	%	26		30.2	
	25A		Powershift (Maximum At Stall) With Load	%	32		28.4	
WT	26	Ttl. Apprx. Wt.	Standard Truck	lb (kg)	67,200	30,482	73,700	33,430
	27	Axle Loading	Static With Rated Load - Front	lb (kg)	100,740	45,696	112,290	50,935 ←
	27A		Static With Rated Load - Rear	lb (kg)	11,460	5,198	13,410	6,083
	27B		Static With No Load - Front	lb (kg)	29,000	13,154	29,000	13,154
	27C		Static With No Load - Rear	lb (kg)	38,200	17,328	44,700	20,276
WHLS/TIRES	28	Tires	Number - Front / Rear		4 / 2		4 / 2	
	29		Size - Front		14.00 x 25 - 20 PR		14.00 x 25 - 20 PR	
	30		Size - Rear		14.00 x 25 - 20 PR		14.00 x 25 - 20 PR	
	31	Wheelbase	Distance	in (mm)	130	3,302	130	3,302
	32	Tread	Center Of Outside (Dual) Tires - Front	in (mm)	104.5	2,654	104.5	2,654
	32A		Center Of Tires - Rear	in (mm)	91	2,311	91	2,311
	33	Ground Clearance	No Load At Lowest Point	in (mm)	12	305	12	305
	34		No Load At Center Of Wheelbase	in (mm)	18	457	18	457
	35	Brakes	Service / Parking - Method Of Control		Foot / Hand		Foot / Hand	
	36		Service / Parking - Method Of Operation		Air / Spring		Air / Spring	
PWR UNIT/XMSN	37	Battery	Volts / Ampere Hours (2 Batteries)	V/Ah	12 / 2300		12 / 2300	
	38	Internal Combustion Engine	Make / Model		Cummins QSC8.3-C230		Cummins QSC8.3-C230	
	39		Output - Intermittent Per SAE Standards	hp (kW)	230	172	230	172
	40		Governed Speed - With Load	rpm	2200		2200	
	41		Cycle / Number Of Cylinders / Displacement	cu-in (L)	4 / 6 / 506	4 / 6 / 8.3	4 / 6 / 506	4 / 6 / 8.3
	42	Clutch	Type		Declutch		Declutch	
	43	Gear Change	Type		Hand		Hand	
	44	Transmission	Number Of Speeds - Forward / Reverse		3 / 3		3 / 3	
	45		Type		Powershift		Powershift	
	46	Relief Press.	For Attachments	psi (bar)	1500	103	1500	103
	47		Width Across Counterweight	in (mm)	108	2,743	108	2,743
	48		Standard Fork Spread	in (mm)	100	2,540	100	2,540
	49		Ground To Top Of Carriage	in (mm)	76.5	1,943	79	2,007
	50		Load Moment	in-lbs (m-kg)	3,453,750	39,792	4,069,000	46,881

† **NOTE:** Performance specifications are for trucks equipped as described on the back page of this specification sheet. Performance specifications are affected by the condition of the vehicle, its components, and the nature and condition of the operating area. If these specifications are critical, the proposed application should be discussed with your Taylor sales representative.

"Big Red" T-450S / T-520S

Mast Dimensions (inches / millimeters)								
	Optional Lift Height (8)				OAHL (13)		OAHR (14)	
	T-450S		T-520S					
2-Stage ULTRA-VU Telescopic Mast	English	Metric	English	Metric	English	Metric	English	Metric
	136.5	3,467	137	3,480	155	3,937	221	5,613
	160.5	4,077	161	4,089	167	4,242	245	6,223
	184.5	4,686	185	4,699	179	4,547	269	6,833
	220.5	5,601	221	5,613	197	5,004	305	7,747

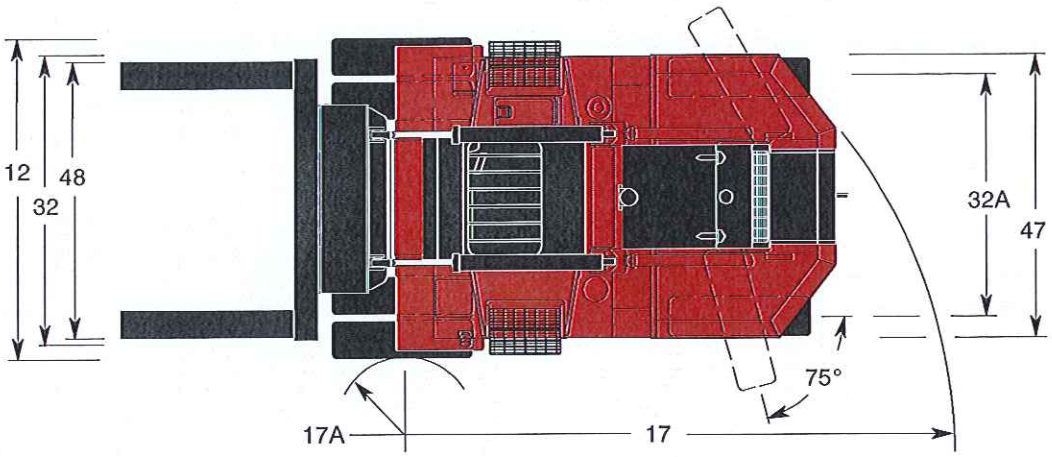

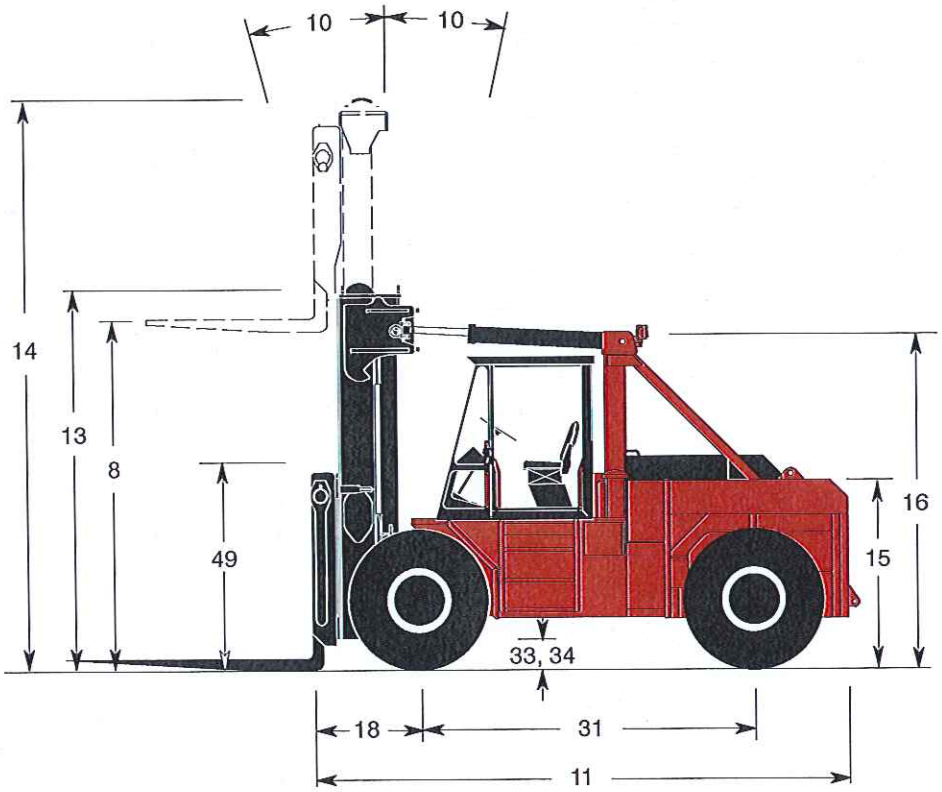

"Big Red" T-450S / T-520S

Engine
Cummins QSC8.3-C230, 6-cylinder electronic turbocharged,charge air after cooled (air to air) diesel engine has 506 cu-in. (8.3 L) displacement, 4.49-in. (114 mm) bore x 5.31-in. (135 mm) stroke. Rated power 230-hp (172 kW) at 2200 rpm (all engine ratings are based on SAE standard ambient conditions). Maximum power of 250-hp (186 kW) at 2000 rpm. Peak torque is 800 ft-lbs. (1,085 N-m) at 1500 rpm. Emission certification: US EPA Tier III, Carb Tier III, EU Stage III.

Standard features are electronic diagnostic, maintenance monitor, fuel/water separator, engine/transmission protection system, fuel economy and reduced emissions.

Fuel tank capacity is 60 gallons (227 L).

Air Cleaner
The dry air cleaner has a safety element and restriction indicator.

Cooling System
The coolant recovery cooling system has an extra large, down flow radiator for maximum efficiency. The wide fin spacing reduces dirt build-up and provides optimum engine cooling.

Electrical, Instrumentation, and Accessories
The one-piece instrument panel flips down for easy servicing and is pre-wired to accommodate heavy-duty accessories. All wiring is color coded.

The unit has a 12-volt electrical system. Standard equipment includes a key-type anti-restart ignition system, 2 heavy-duty batteries, 100-amp alternator, mechanical pressure gauges, electrical temperature gauges, reset circuit breakers, lighted instruments, horn, key-switch actuated amber strobe light, reverse-actuated warning alarm and tilt steering.

Gauges include fuel level, ammeter, hourmeter, air pressure, engine oil pressure, engine coolant temperature, transmission oil pressure, and transmission oil temperature. Lights included are seat belt light, low air light, parking brake light, and step lights.

Transmission
The three-speed, fully reversing, modulated, powershift transmission has declutch and electric shift control. Brakes behind declutch. The filler pipe dipstick and large, heavy-duty oil filter are easily accessible. Separate air-to-oil cooler. The integrally built torque converter has constant-mesh gear sets actuated by hydraulic clutch packs. An automatic powershift control is standard.

Drive Axle
The heavy-duty planetary type housing is welded to the frame; the axle utilizes a hypoid ring gear and pinion.

Steer Axle
The single hydraulic cylinder design steer axle, with heavy-duty links from the cylinder ram directly to tapered roller bearing mounted spindles, has tapered wheel and kingpin bearings. All joints are sealed, can be lubricated, and never need adjusting.

Brake System
The force cooled, wet disc, air/hydraulic actuated, service brakes are mounted on the drive axle. The transmission is equipped with a spring applied drum brake for parking.

Chassis
The all welded frame has an integral, sloped, counterweight and tubular A-frame. A spring-assisted hood and hinged doors provide easy access to service points.

The canopy is integral with the operator station base. The center mount operator station is standard and can be optionally located offset to the left side of the vehicle. The tinted, unbreakable, Lexan top with steel crossbars provides maximum visibility and protection. The suspension seat with an operator seat belt is adjustable.

Hydraulic System
The large capacity hydraulic tank has a spin-on tank breather, suction strainers, return line filters and replaceable elements in the tank. The hydraulic system utilizes transmission-driven gear type pumps. The tank refill capacity is 72 gallons (273 L). The tilt lock valve prevents mast drift and reduces torsional stress. Dual lift cylinders have chrome-plated rods and self-adjusting packing. Control levers are conveniently located. Valves are controlled with hydraulic remotes.

Mast, Carriage, and Rollers
The 11-ft. (3.4 m) ULTRA-VU telescopic, nested-channel mast, with two nested, hidden multiple-leaf lift chains, is constructed of high-strength steel for minimal weight. The two lifting eyes and bolt-on caps permit safe, easy removal of the mast.

The 100-in. (2,540 mm) "C" type carriage is high strength-to-weight ratio. The forks are pin-mounted and fully adjustable from 100-in. (2,540 mm) outside to 2-in. (51 mm) inside the center brace.

Main rollers and chain rollers have shielded, tapered, roller bearings. The carriage side wear pads are adjustable to compensate for wear. All rollers can be lubricated.

Forks
The forks are hammer forged from heat treated alloy steel.
Size for T-450S:
4.5-in. x 8.5-in. x 72-in. (114 mm x 216 mm x 1,829 mm)
Size for T-520S:
5-in. x 10-in. x 72-in. (127 mm x 254 mm x 1,829 mm)

This vehicle is certified to meet the applicable design and performance criteria required for Powered Industrial Trucks in OSHA Safety and Health Standards, Title 29 CFR. Part 1910.178, and the applicable design and performance requirements in ANSI B56.1 that were in effect at the time of manufacture. These standards also apply to the user and should be adhered to while operating this vehicle.

All specifications are subject to change without notice. Some operating data may be affected by the condition of the operating area. If these specifications are critical, contact the factory.

Taylor Machine Works, Inc.
650 North Church Avenue
Louisville, Mississippi 39339-2017
Phone (662) 773-3421 Fax (662) 773-9146

EE, EF (1/08)
Printed in U.S.A.

WIPP Above Ground Storage Capability (AGSC)

Attachment B: ANS-2.3-2011 Figure 1, and Tables 2 & 4

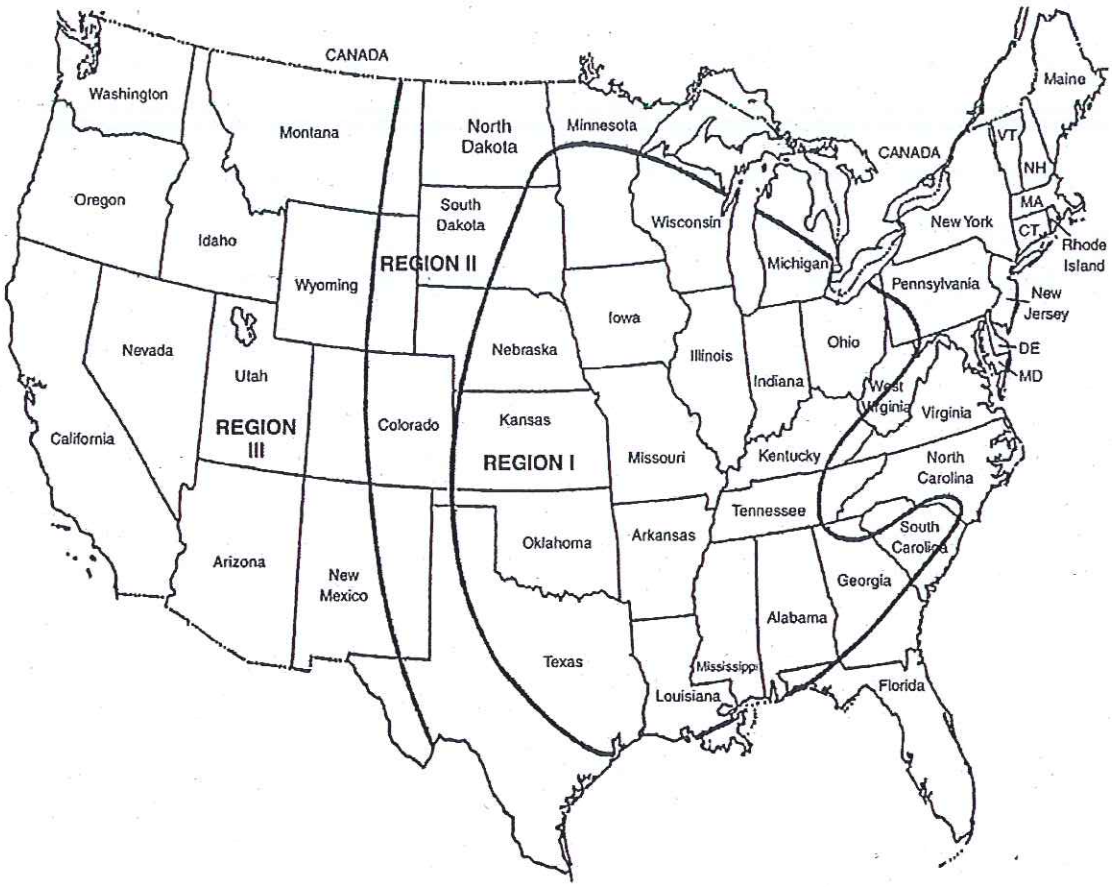

Figure 1 – Regionalization of extreme and rare wind events

R is the radius of tangential wind speed;

R_m is the radius of maximum tangential wind speed;

Δp is the maximum atmospheric pressure drop;

ρ is the air density.

The tangential (V_{tr}), radial (V_r), and vertical (V_z) wind fields vary with height and radius but may be assumed constant with height for design purposes. The maximum radial wind speed is assumed to be 0.7 times the maximum tangential wind. The height of the radial inflow layer shall be at least 0.35 R. Above this height, the radial wind is assumed to be zero or to flow outward. The vertical wind field is assumed to be mass consistent with the radial wind field.

The maximum radial wind and the height of the radial inflow layer are prescribed based on theoretical work. Numerical and analytical models were evaluated and compared with known physical principals and observational data. The most representative numerical models [8], [9] and analytical models [10] agree concerning the location and magnitude of these two parameters.

The minimum vortex translational speed is defined to be >5 mph (2.2 m/s). The atmospheric pressure drop shall be determined by integrating the cyclostrophic equation using a Rankine combined vortex.

The maximum tangential wind speed shall be defined as

$$V_{tr} = V - V_t \ . \tag{3}$$

Copyright American Nuclear Society
Provided by IHS under license with ANS
No reproduction or networking permitted without license from IHS

Sold to:CB&I FS, Canton, MA, 888267
Not for Resale,04/12/2016 08:22:39 MDT

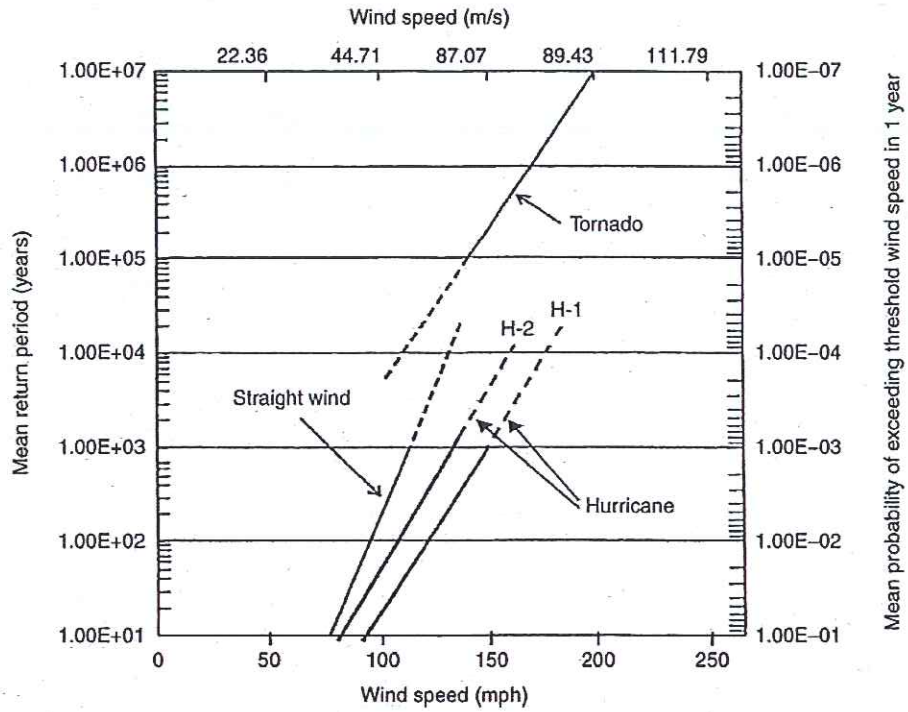

Figure 3 – Wind speeds at a Region II wind hazard site

Table 2 – Design basis tornado wind field characteristics

Maximum tornado wind speed V	Translational wind speed T	Radius R_m	Maximum atmospheric pressure drop ΔP [1)]
250 mph (112 ms^{-1})	55 mph (24 ms^{-1})	435 ft (133 m)	1.35 psi (9.1 kPa)
200 mph (89 ms^{-1})	45 mph (20 ms^{-1})	355 ft (108 m)	0.85 psi (5.8 kPa)
180 mph (80 ms^{-1})	40 mph (18 ms^{-1})	320 ft (98 m)	0.70 psi (4.8 kPa)
150 mph (67 ms^{-1})	33 mph (16 ms^{-1})	270 ft (82 m)	0.49 psi (3.3 kPa)
140 mph (63 ms^{-1})	32 mph (14 ms^{-1})	253 ft (77 m)	0.41 psi (2.8 kPa)
100 mph (45 ms^{-1})	25 mph (11 ms^{-1})	185 ft (56 m)	0.20 psi (1.4 kPa)

[1)] $\delta \Delta P = \rho V_{tr}^2 = 3.546 \times 10^{-5} V_{tr}^2$ [where V_{tr} is in miles per hour (mph)],

where:

ΔP = psi [kilopascal (kPa)];

$\rho = 3.546 \times 105^5$ density constant to convert wind velocity in mph to pressure in psi;

V_{tr} = maximum rotational or tangetial wind speed = $(V - T)$;

1.0 psi = 6.8 kPa.

Copyright American Nuclear Society
Provided by IHS under license with ANS
No reproduction or networking permitted without license from IHS

Sold to:CB&I FS, Canton, MA, 888267
Not for Resale,04/12/2016 08:22:39 MDT

Table 4 – Standard design missile spectrum for tornado- and hurricane-type winds*

		Missile Horizontal Velocity Coefficient[1), 2)]	
Missile[3)]	**Horizontal wind velocity range greater than V or V_h**	**Tornado (V) coefficient, k_1**	**Hurricane (V_h) coefficient, k_1**
	Weight 4000 lb (1810 kg)[2)]		
Impact type: automobile, 20.0-ft^2 (2.0-mi^2) contact area	250 mph (400 kmph)	0.4	0.7
	200 mph (325 kmph)	0.4	0.6
	150 mph (245 kmph)	0.3	0.6
	100 mph (160 kmph)	0.3	0.5
	Weight 287 lb (130 kg)[1)]		
Penetrating-type, Schedule 40 pipe, 6.0-in. (150-mm) diameter, 15-ft (4.58-m) length	250 mph (400 kmph)	0.4	0.5
	200 mph (325 kmph)	0.4	0.5
	150 mph (245 kmph)	0.4	0.5
	100 mph (160 kmph)	0.4	0.5
	Weight 0.147 lb (0.0669 kg)[1)]		
Solid steel sphere, structural opening 1.0-in. (25-mm)-diameter	250 mph (400 kmph)	0.1	0.5
	200 mph (325 kmph)	0.1	0.4
	150 mph (245 kmph)	0.1	0.4
	100 mph (160 kmph)	0.0	0.3

* ft^2 = square feet; mi^2 = square miles; mph = miles per hour; kmph = kilometers per hour; k_1 = missile velocity coefficient as shown in note 2).

1) Vertical velocity taken as 0.67 of horizontal velocity.

2) Missile velocity = $k_1(V \text{ or } V_h)$.

3) Automobile missile impact limited to elevation ≤30 ft (9.14 m) above plant grade.

(1) constant or gradations of velocity along and across the tornado path;

(2) meteorological conditions affecting the site;

(3) topographical features surrounding the site;

(4) biases in reporting occurrence and velocity of tornadoes on target structures considered as a point source as well as a standardized size of structures [e.g., 300 × 300 ft (96 × 96 m)], any part of which can be struck by a tornado.

Determination of a design basis wind based on a site-specific study should consider historical wind statistics at a site or a localized region with similar spatially representative wind characteristics based on meteorological and topographical conditions. The extreme wind speed selected for the site from such a study shall be

Copyright American Nuclear Society
Provided by IHS under license with ANS
No reproduction or networking permitted without license from IHS

Sold to:CB&I FS, Canton, MA, 888267
Not for Resale,04/12/2016 08:22:39 MDT

WIPP Above Ground Storage Capability (AGSC)

Attachment C: USGS Spectral Acceleration Parameters

USGS Seismic Design Map Tool

http://earthquake.usgs.gov/designmaps/us/application.php

IBC 2009
SITE CLASS D
OCCUPANCY III

Site location: 33 Miles South East, Carlsbad, NM 88220

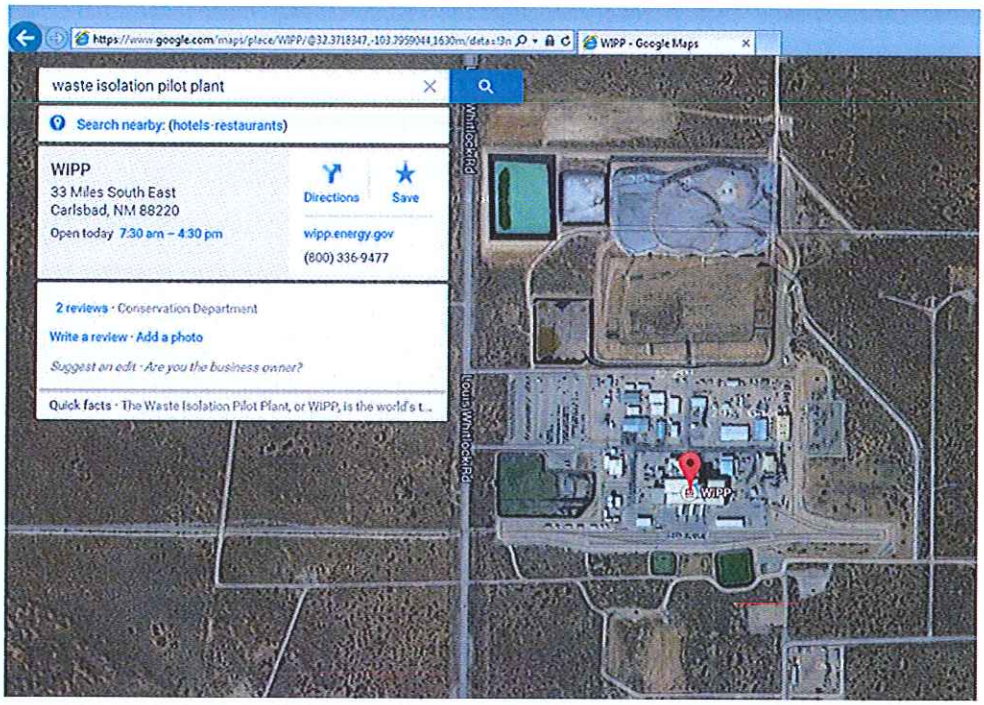

Latitude: 32.3715 degrees North
Longitude: 103.79029 degrees West

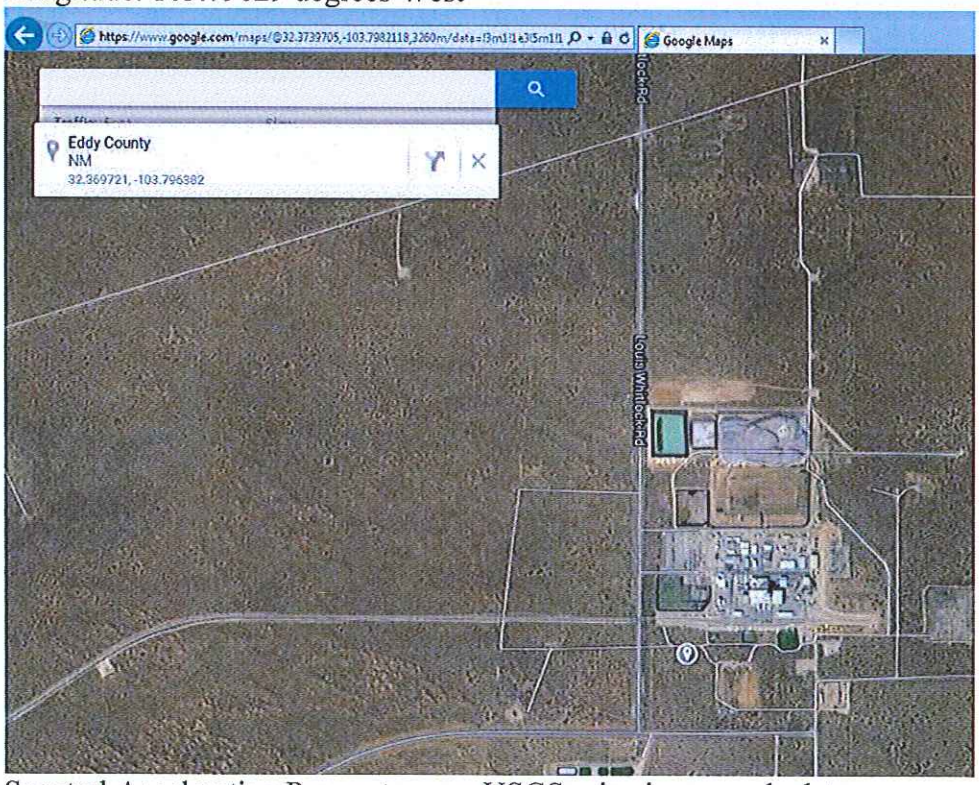

Spectral Acceleration Parameters per USGS seismic map calculator:
S_S = 0.207, S_1=0.045

Project/Task: N/A	**Calculation Number:** G-CLC-E-00308	**Project/Task Number:** N/A
Title: Physical Integrity Calculations for Closed Concrete Culverts or Equivalent Concrete Box Overpacks	**Functional Classification:** SS **Discipline:** Solid Waste	**Sheet:** 1 of 35
Calculation Type: [X] Type 1 [ ] Type 2	**Type 1 Calc Status:** [ ] Preliminary [X] Confirmed	
Computer Program No: N/A	**Version/Release No.:** N/A	

Purpose and Objective:

The Purpose and Objective of this calculation is to demonstrate compliance with container physical integrity Functional Requirements (Reference 1) of Closed Concrete Culverts and Concrete Box Overpacks.

Summary of Conclusion

Reference 1 identifies 6 Functional Requirements for a Closed Concrete Culvert or Equivalent (Section 4.4.2.3). Requirements 1- 5 identify structural integrity attributes such that the radiological inventory inside the container is not available for release during identified accident scenarios.

These calculations demonstrate a SRS Closed Concrete Culvert (References 6 and 7) satisfies Reference 1, Section 4.4.2.3 Functional Requirements 1-5.

These calculations demonstrate a SRS Concrete Box Overpack (Reference 8) satisfies Reference 1, Section 4.4.2.3 Functional Requirements 1-5.

The Purpose and Objectives of this calculation have been met.

Revisions

Rev #	Revision Description
0	Initial Release
1	Revision to Reference 8. Added manufacturing tolerance to internal and external dimensions of concrete box overpack.

Sign Off

Rev No.	Originator(s) (Print) Sign/Date	Verification/Checking Method	Verifier/Checker (Print) Sign/Date	Manager (Print) Sign/Date
0	D. Burns	☐ Design Check (GS/PS only) ☐ Document Review ☐ Qualification Testing ☐ Alternate Calculation ☐ Operational Testing		
1	D. Burns 12/18/13	☐ Design Check (GS/PS only) ☑ Document Review ☐ Qualification Testing ☐ Alternate Calculation ☐ Operational Testing	D.A. GRACY 12/18/13	PN FAIRCHILD 12/18/13

Additional Reviewer (Print) STEVEN E CROOK	Signature	Date 12/18/13
Design Authority (Print) STEVE J MERTRUP	Signature S J Mertrup	Date 12/18/13
Release to Outside Agency (Print) N/A	Signature N/A	Date N/A

Security Classification of the Calculation: Not Required by 7Q

REVIEWER(S):

NAME (PRINT OR TYPE)	SIGNATURE	DATE
D.A. GRACY	D A Gracy	12/18/13

		CIRCLE ONE		
1.	Are the Subject and/or Purpose clearly stated?	Yes	No	
2.	Are the required Input Data and their references and source provided and are they consistent with the Calc-note purpose?	Yes	No	
3.	Are the Assumptions clearly identified, valid, and consistent with the Calc-note purpose?	Yes	No	
4.	Is the Analytical Method or Approach Used clearly identified?	Yes	No	
5.	Are all pages consecutively numbered and identified by the Calc-note number?	Yes	No	
6.	Is/are the version(s) of the computer program(s) used identified and QA'd adequately?	Yes	No	N/A
7.	Are input listings for all computer programs documented in this Calc-note, and are they V&Vd and appropriate for the intended use?	Yes	No	N/A
8.	Are the Results and Conclusions clearly stated?	Yes	No	
9.	Are all OUTPUT documents included (or if not part of the calculation, clearly referenced in the Results section?) grammatically correct, clear and consistent with the main Calc-note text?	Yes	No	N/A
10.	Are the results, methods, input, and assumptions compatible with the stated purpose?	Yes	No	

IF NO TO ANY OF THE ABOVE, LIST SHEET NUMBER (S) WITH JUSTIFICATION AND OBTAIN MANAGER'S SIGNATURE BELOW:

NO ENTRY

Manager's Signature

REVIEWER'S NOTES (use additional pages as necessary)

Review method used: document review

Alternate calculation: ___ Attached: Y___ N___ N/A

Approximated Originator's steps: _____

NO ENTRY

TABLE OF CONTENTS

Section Sheet

References…….4

Introduction……..5

Open Items……....5

Inputs...…….5

Assumptions…….6

Analytical Methods and Computations……....6

Figure 1 – High Wind Culvert Tipping Force Diagram.....9

Figure 2 – Seismic Event Culvert Tipping Force Diagram.....12

Figure 3 – High Wind CBO Tipping Force Diagram.....22

Figure 4 – Seismic Event CBO Tipping Force Diagram.....24

Table 1 – Factory Mutual Concrete Wall Fire Ratings.....26

Conservatisms.....29

Results.....29

Conclusion.....31

Attachment 1…….....32

Attachment 2…….....34

References:

1. WSRC-SA-22, "Savannah River Site Solid Waste Management Facility Documented Safety Analysis," Revision 20, May 2013.
2. WSRC-TS-95-16, "Solid Waste Management Facility Technical Safety Requirements," Revision 21, September 2012.
3. M-SPP-G-00250, Procurement Specification for Concrete Storage Containers, Revision 5, August 29, 2000.
4. SRNS Purchase Order # 0000123102, Precast Concrete Box Storage Container with Lid, October 1, 2013.
5. WSRC-TM-95-1, Structural Design Criteria, Engineering Standard 01060, Revision 10, August 12, 2010.
6. Drawing # C-CP-E-0006, "Transuranic Waste Storage Container Without Trunions Plan, Sections, and Details Concrete (U)," Revision 0, June 7, 1995.
7. Drawing # S5-2-9097, "Alpha Waste Concrete Burial Container," Revision 8, September 17, 1991.
8. Drawing # SRNS-1 VLT, Precast Concrete Waste Storage Box, Revision 6, December 17, 2013.
9. OSR19-287 Replacement Item Evaluation / Commercial Grade Item Dedication G-CGD-E-00001, Concrete Box Overpack, Revision 1.
10. S-CLC-E-00050, "Seismic and Tornado Analysis of TRU Pads, Revision 0, March 15, 1995.
11. Unit Operations of Chemical Engineering, McCabe, Smith, and Harriott, Fourth Edition, McGraw-Hill Chemical Engineering Series, 1985.
12. CRC Handbook of Chemistry and Physics, 68th Edition, CRC Press, 1988.
13. WSRC-TM-95-1, Structural Design Criteria, Engineering Standard 01060, Section 5.2.2.5.1, Revision 10, August 12, 2010.
14. F-CLC-E-00011, "Performance of a Culvert During an External Fire," Revision 0, February 20, 2007.
15. FM Global Property Loss Prevention Data Sheets: Fire Resistance of Building Assemblies, FM 1-21, Factory Mutual Insurance Company, Norwood, MA, 2006, January 2012.
16. DOE-STD-5506-2007, Preparation of Safety Basis Documents for Transuranic (TRU) Waste Facilities, April 2007.
17. S-CLC-E-00207, "Solid Waste Management Facility (SWMF) Inputs and Assumptions," Revision 14, October 10, 2012.

Introduction:

The Solid Waste Management Facility (SWMF) Documented Safety Analysis (DSA) (Reference 1) identifies the safety function of a Closed Concrete Culvert or Equivalent (CCCoE) as limiting the radiological inventory available for release during identified SWMF accident scenarios. The DSA specifies six functional requirements of a CCCoE such that the safety function can be fulfilled. The SWMF Technical Safety Requirements (TSR) (Reference 2) also defines the five safety functions of a CCCoE. Both the DSA and TSR require that a CCCoE must be designed/fabricated with sufficient structural integrity to not tip, slide, fail, or suffer lid loss during an internal explosion, seismic event, tornado, or other defined Natural Phenomena Hazard (NPH). Also, a CCCoE should serve as a 3-hour fire barrier during an external fire event. These structural integrity Functional Requirements are identified in Reference 1, Section 4.4.2.3, Requirements 1-5. This calculation addresses these structural integrity requirements for a closed SRS concrete culvert (References 6 and 7) and a SRS closed Concrete Box Overpack (CBO) (Reference 8).

Open Items:

None

Inputs:

Input 1

The physical dimensions of an SRS concrete culvert with fork pockets in the base are identified in drawing C-CP-E-0006 (Reference 6). The physical dimensions of an SRS concrete culvert without fork pockets in the base are identified in drawing S5-2-9097 (Reference 7).

Basis For Why This Input Is Valid:

References 6 and 7 are the currently approved versions of controlled drawings for SRS concrete culverts.

Input 2

The physical dimensions of an SRS Concrete Box Overpack (CBO) are identified in drawing S1, included as Attachment 1 (Reference 8).

Basis For Why This Input Is Valid:

Reference 8 is the approved fabrication drawings for manufacture of the SRS Concrete Box Overpack (CBO). Container dimensions are verified through receipt inspection per

the applicable Commercial Grade Dedication (CGD) G-CGD-E-00001 (Reference 9) for procurement of these CBOs.

Assumptions:

None

Analytical Methods and Computations:

The objective of this calculation is to use the physical dimensions and weight of a closed concrete culvert and closed Concrete Box Overpack (CBO) to calculate compliance with Functional Requirements (FR) 1-5 of Reference 1. These requirements are summarized below.

FR1. During external fire events, the CCCoE functions as a 3-hour thermal barrier.

FR2. During internal explosion events, the CCCoE provides a confinement function by limiting the release of material by absorbing or deflecting the forces associated with an internal deflagration.

FR3. During seismic events, the CCCoE must be of sufficient mass and dimensions to prevent tipping.

FR4. During tornado/high wind events, the CCCoE must be of sufficient mass and dimensions to prevent tipping, sliding, or lid loss.

FR5. During NPH events, the CCCoE must be impact resistant such that the collapse of light/moderate structures or falling structural objects (e.g. light fixtures, cable trays, or conduits) do not impact the Material At Risk (MAR) inside the CCCoE.

Reference 1 specifies that Performance Category 3 (PC-3) natural phenomena hazards criteria should be used for the considered NPH events. Reference 5 defines the specific conditions that are associated with PC-3 events addressed in this calculation.

<u>SRS Closed Concrete Culvert Physical Integrity Calculations</u>

There are two types of concrete culverts in use at SRS. One type has a uniform 6” thick flat bottom (Reference 7). The second type has two 5” deep fork-truck tine pockets cut into the 12” thick bottom (Reference 6). The concrete culverts with tine pockets have an 88” outer diameter (OD), 96” external height (H), and a tare weight of 22,000 lbs. The concrete culverts without pockets were fabricated with outer diameters of 86” and 88”. The H of both of these culverts is 90”, and the minimum tare weight for these two designs is 19,200 lbs. (Reference 10)

1. Assessment of Culvert Sliding during Tornado/High Wind Event (FR 4)

Input Variables:

Maximum Wind Speed for high wind event = 133 mph	[Reference 5]
Maximum Wind Speed for tornado event = 180 mph	[Reference 5]
Maximum Culvert Outer Diameter = 88”	[References 6 and 7]
Minimum Culvert Outer Diameter = 86”	[References 6 and 7]
Maximum Culvert Height = 96”	[References 6 and 7]
Minimum Culvert Height = 84”	[References 6 and 7]
Minimum Culvert Weight = 19,200 lbs	[Reference 10]
Assumed Air Density, ρ_{air} saturated @20°C= 1.194 kg/m^3	[Reference 11]
Assumed Air Viscosity, μ_{air} @20°C = 1.8E-5 kg/m*sec	[Reference 10]

The force produced by the wind, incident upon the face of the culvert, during this event is given by the following equation that is derived from the definition of Drag Coefficient (Reference 11):

$$F_{wind} = \left(\frac{0.5}{g_c}\right)\left(C_{drag}\right)(D_{air})(A)(V)^2 \qquad \text{[Reference 11] (Eq. 1)}$$

Where:

F_{wind} = Force of Wind, N

C_{drag} = Drag Coefficient, *dimensionless*

D_{air} = Air Density, $\frac{kg}{m^3}$

A = Area presented to the wind, m^2

V = Air Velocity, $\frac{m}{sec}$

g_c = Force Conversion Factor, 1 $\frac{kg*m}{N*\,sec^2}$

Reference 10 provides a table of C_{drag} as a function of the Reynolds number for an object in a fluid, $N_{Re,p}$. The Reynolds number can be calculated with the following equation:

$$N_{Re,p} = \frac{V*\rho_{air}*D_p}{\mu_{air}} \qquad \text{[Reference 10]}$$

Where,

D_p = Characteristic Length of Object = Diameter for a cylinder [Reference 10]

Solving for $N_{Re,p}$; with V = 180 miles/hr = 80.46 m/sec

$$N_{Re,p} = \left(\frac{80.46\ m}{sec}\right)\left(\frac{1.194\ kg}{m^3}\right)\left(\frac{88\ inches}{}\right)\left(\frac{1\ m}{39.37\ inches}\right)\left(\frac{m * sec}{1.8E-5\ kg}\right)$$

$N_{Re,p}$ = 1.19E+7

The figure in Reference 10 gives values for C_{drag} as a function of $N_{Re,p}$ for Reynolds numbers up to 1.0E+6. For a cylinder, $C_{drag} = 0.38$ @ $N_{Re,p} = 1.0E+6$. However, at Reynolds numbers above 3.0E+5, the drag coefficient is nearly constant (Reference 10). Thus, for this condition, the following conservative value for the drag coefficient will be used;

C_{drag} = 0.50

The area of the culvert presented to the wind is given by the following equation;

A = (Maximum Culvert Outer Diameter) * (Maximum Culvert Height)

$$A = \left(\frac{88\ inches}{}\right)\left(\frac{96\ inches}{}\right)\left(\frac{1\ m}{39.37\ inches}\right)^2$$

A = 5.36 m^2

Using these values for the drag coefficient, the area presented to the wind, and the maximum wind speed of 180 mph (80.46 m/s), the equation for the force of the wind on the culvert (Eq. 1) can be solved.

$$F_{wind} = \left(\frac{0.5\ N * sec^2}{kg * m}\right)(0.50)\left(\frac{1.194\ kg}{m^3}\right)(5.36\ m^2)\left(\frac{80.46\ m}{sec}\right)^2$$

$$\boldsymbol{F_{wind} = 10,360\ N}$$

An alternate methodology to calculate the force of wind on the culvert (F_{wind}) is outlined in Reference 5, Section 5.2.1.7. Using this alternate methodology (Reference 5 recommends using the methodology of Section 28.4.1 of ASCE/SEI 7 Minimum Design Loads For Buildings and Other Structures), the resultant F_{wind} is approximately 30% lower. Since Equation 1 resulted in a higher (i.e. more conservative) estimate of the wind force on a culvert, the methodology of Equation 1 was used for this calculation.

The minimum force required for a culvert to slide can be calculated using the following equation;

$$F_{min} = (m_{cul})(g)(C_{friction})$$ [Reference 12]

Where,

F_{min} = Minimum force required to slide a culvert, N

m_{cul} = Mass of culvert (conservative empty weight used) = 19,200 lbs = 8709 kg

g = Acceleration of gravity, 9.8066 m/s^2

$C_{friction}$ = Coefficient of friction for concrete on concrete = 0.3 [Reference 13]

Therefore,

$$F_{min} = (8709\ kg)\left(\frac{9.8066\ m}{s^2}\right)(0.3)$$

$$\boldsymbol{F_{min} = 25,620\ N}$$

Thus, it takes at least 25,620 N of force to slide/move a culvert. Since the force of the tornado/high wind on the culvert (e.g. 10,360 N) is less than the force needed to slide the culvert, the culvert will not slide/move during a tornado/high wind event.

2. Assessment of Culvert Tipping during Tornado/High Wind Event (FR4)

The force diagram in Figure 1 illustrates the forces/torques that apply in a culvert tipping event.

Figure 1

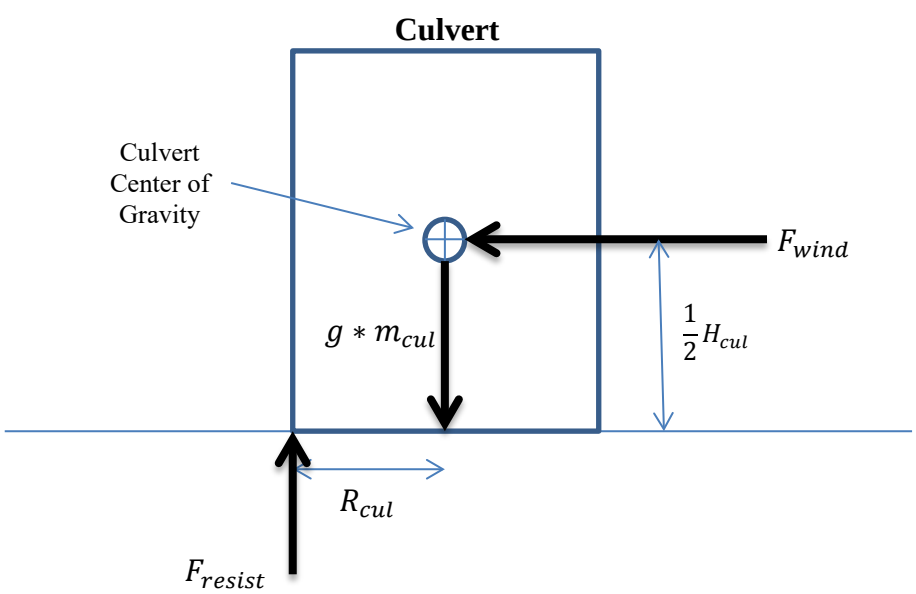

Conducting a force balance on Figure 1, it can be seen that the moment that must be exceeded to overturn a culvert is given by the following equation;

$$M_{OT} = (R_{cul})(F_{resist}) = (R_{cul})(m_{cul})(g)$$

Where,

M_{OT} = Moment required to overturn a culvert, N*m

F_{resist} = Minimum force to prevent tipping, N

R_{cul} = Radius of culvert (conservative minimum radius) = 43 inches = 1.09 m

m_{cul} = Mass of culvert (conservative empty weight used) = 19,200 lbs = 8709 kg

g = Acceleration of gravity, 9.8 m/s^2

Solving for overturning moment,

$$M_{OT} = (1.09\ m)(8709\ kg)\left(\frac{9.8\ m}{s^2}\right)$$

$$\boldsymbol{M_{OT} = 93{,}030\ N * m}$$

The moment applied to the culvert by the calculated maximum force applied to the culvert by the wind ($F_{wind} = 10{,}360\ N$) is given by the following equation (See Figure 1);

$$M_{wind} = \left(\frac{1}{2}\right)(F_{wind})(H_{cul})$$

Where,

H_{cul} = Height of culvert (conservative maximum height) = 96 inches = 2.44 m

Solving for moment applied to the culvert by the maximum wind,

$$M_{wind} = \left(\frac{1}{2}\right)(10{,}360\ N)(2.44\ m)$$

$$\boldsymbol{M_{wind} = 12{,}640\ N * m}$$

Thus, it takes a moment of at least 93,030 N*m to overturn a culvert. Since the moment on the culvert from the force of the maximum wind on the culvert (e.g. 12,640 N*m) is less than the moment needed to overturn the culvert, the culvert will not overturn during a tornado/high wind event.

3. Assessment of Culvert Lid Loss during Tornado/High Wind Event (FR4)

The maximum pressurization change associated with a PC-3 tornado ($\Delta P_{tornado}$) is 70 lbs/ft^2 (Reference 1). The total lifting force exerted on the culvert lid during this pressurization change ($F_{\Delta press}$) can be calculated as follows;

$$F_{\Delta press} = (\Delta P_{tornado})(A)$$

Where,

A = Area of Culvert Lid exposed to $\Delta P_{tornado}$, ft^2

The maximum ID of a culvert is 74" = 6.2 ft [References 6 and 7]

$A = \pi(r_{lid})^2 = \pi\left(\frac{6.2\ ft}{2}\right)^2 = 30.2$ ft^2

Solving for $F_{\Delta press}$,

$$F_{\Delta press} = \left(\frac{70\ lbs}{ft^2}\right)(30.2\ ft^2)$$

$$\boldsymbol{F_{\Delta press} = 2,114\ lbs}$$

Thus, the lifting force on the culvert lid during a PC-3 tornado is 2,114 lbs. The minimum weight of a culvert lid is 2600 lbs (Reference 10). Since the maximum lifting force of a PC-3 tornado is less than the weight of a culvert lid, the lid will not lift off the culvert.

4. Assessment of Culvert Tipping during Seismic Event (FR 3)

A PC-3 seismic event will impart a maximum acceleration of 0.375*g (Reference 5), where g = acceleration of gravity (9.8 m/sec^2). Thus, the maximum horizontal force imparted to the culvert is given below;

$$F_{hor} = Horizontal\ Seismic\ Force = (0.375)\left(9.8\ \frac{N}{kg}\right) = 3.675\ \frac{N}{kg}$$

This horizontal seismic force is applied to the culvert in a lateral direction through the center of gravity as shown in Figure 2 below.

Figure 2

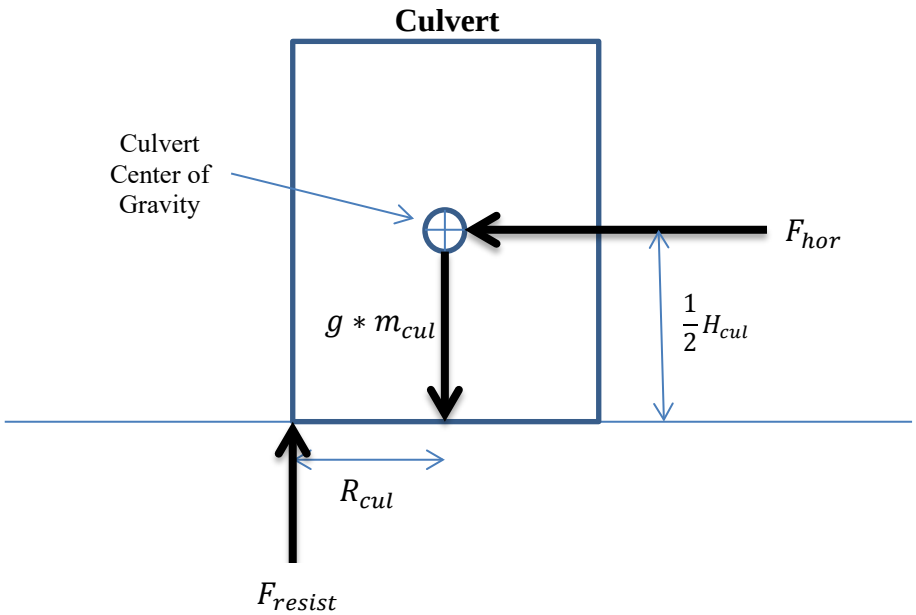

Where;

H_{cul} = Height of culvert (conservative maximum height) = 96 inches = 2.44 m

R_{cul} = Radius of culvert (conservative minimum radius) = 43 inches = 1.09 m

m_{cul} = Mass of culvert (assume empty culvert) = 19,200 lbs = 8709 kg

g = force of gravity = 9.8 m/sec^2

F_{resist} = Restoring force (prevents culvert from tipping)

A force balance of Figure 2 reveals that seismic overturning moment is equal to:

$$M_{seismic} = (F_{hor})(m_{cul})\left(\frac{1}{2}H_{cul}\right)$$

The moment that resists overturning (i.e. results from F_{resist}) is equal to:

$$M_{resist} = (m_{cul})(g)(R_{cul})$$

As long as M_{resist} is greater than $M_{seismic}$, the culvert will not overturn.

Solving the two moment values for a culvert in a PC-3 seismic event yields;

$M_{seismic} = \left(3.675\ \frac{N}{kg}\right)(8709\ kg)\left(\frac{1}{2}\right)(2.44\ m)$ = 39,047 N∗m

$M_{resist} = (8709\ kg)\left(9.8\frac{m}{sec^2}\right)(1.09\ m)$ = 93,030 N∗m

Since the overturning moment of a PC-3 seismic event on the culvert (e.g. 39,047 N*m) is less than the calculated culvert resisting moment, the culvert will not overturn during a PC-3 seismic event.

5. Assessment of Culvert as a 3 Hour Thermal Barrier (FR 1)

The fire rating of SRS concrete culverts is analyzed and addressed in Reference 14. This Engineering calculation concludes that the fire endurance rating for the concrete culvert is greater than 3 hours.

6. Assessment of Culvert to resist external impacts during NPH event (FR 5)

A PC-3 tornado event includes three tornado missiles that should be considered (Reference 1).

6.1 Timber plank weighing 15 lbs. and traveling a maximum of 100 mph,
6.2 A 3" diameter steel pipe, 75 lbs., traveling a maximum of 75 mph,
6.3 A 3,000 lbs. automobile rolling and tumbling at 19 mph.

If a culvert resists these PC-3 tornado missile impacts (i.e. does not breach the culvert wall), it is judged that a closed concrete culvert, impacted by collapse of a light or moderate structure, will remain intact such that the contents do not contribute to the event MAR.

Perforation depth of a missile into a concrete wall is calculated by the following equation;

$$P = \frac{427}{\sqrt{f_c'}}\left(\frac{W}{(D_m)^{1.8}}\right)\left(\frac{V}{1000}\right)^{1.33}$$ [Reference 10] (Eq. 2)

Where,

P = Perforation thickness, inches

f_c' = compressive strength of concrete, psi

W = Missile weight, lbs.

D_m = Diameter of missile, inches

V = Missile strike velocity, ft/sec

Each of the three PC-3 tornado missile impact events is evaluated for a closed concrete culvert in Sections 6.1 – 6.3.

6.1 Impact of a timber plank on a concrete wall

The equation for perforation of a missile into a concrete wall (P) (Eq. 2) will be solved for a wooden 2x4. The actual dimensions of a wooden 2x4 are 1.5" x 3.5". The equivalent diameter of a 1.5" x 3.5" missile is 2.6" (Reference 10). The timber is assumed to strike on the end of the timber, perpendicular to the culvert wall. Solving for perforation depth for a 2x4 is shown below.

W = Missile weight, 15 lbs.

D_m = Diameter of missile, 2.6 inches

V = Missile strike velocity, 100 mph = 146.7 ft/sec

f_c' = compressive strength of concrete, 4000 psi [References 6 and 7]

$$P = \frac{427}{\sqrt{4000}}\left(\frac{15}{(2.6)^{1.8}}\right)\left(\frac{146.7}{1000}\right)^{1.33} = 1.41 \text{ inches}$$

Therefore a 2x4 timber plank weighing 15 lbs. and traveling a maximum of 100 mph will create a 1.41" deep perforation when impacting a 4000 psi compressive strength concrete wall. Since a concrete culvert has a 7" thick wall, the timber will not penetrate through the culvert wall.

6.2 Impact of a 3" steel pipe on a concrete wall

The equation for perforation of a missile into a concrete wall (P) (Eq. 2) will be solved for a 3" steel pipe. A nominal 3" steel pipe is assumed to have an outer diameter of 3.5". The pipe is assumed to strike on the end of the pipe, perpendicular to the culvert wall. Solving for perforation depth for a 3" steel pipe is shown below.

W = Missile weight, 75 lbs.

D_m = Diameter of missile, 3.5 inches

V = Missile strike velocity, 75 mph = 110.0 ft/sec

f_c' = compressive strength of concrete, 4000 psi [References 6 and 7]

$$P = \frac{427}{\sqrt{4000}}\left(\frac{75}{(3.5)^{1.8}}\right)\left(\frac{110.0}{1000}\right)^{1.33} = 2.82 \text{ inches}$$

Therefore a 3" steel pipe weighing 75 lbs. and traveling a maximum of 75 mph will create a 2.82" deep perforation when impacting a 4000 psi compressive strength concrete wall. Since a concrete culvert has a 7" thick wall, the steel pipe will not penetrate through the culvert wall.

6.3 Impact of a tumbling automobile on a concrete wall

The equation for perforation of a missile into a concrete wall (P) (Eq. 2) will be solved for a tumbling automobile. The tumbling automobile is traveling at 19 mph. However, the automobile total kinetic energy has both translational and rotational components. The total energy (E_t) of the rolling/tumbling automobile can be expressed by the following equation;

$$E_t = \frac{1}{2}mv^2 + \frac{1}{2}I_o\omega^2$$

Where,

m = Automobile mass

v = Automobile translational velocity

I_o = Automobile rotational moment of inertia

ω = Automobile rotational angular velocity

By setting the above equation equal to an equivalent total kinetic energy, an equivalent velocity can be calculated (this equivalent velocity includes both the translational and rotational energy).

$$E_t = \frac{1}{2}mv^2 + \frac{1}{2}I_o\omega^2 = \frac{1}{2}m\left(v_{eq}\right)^2$$

Where,

v_{eq} = Automobile equivalent translational velocity

Making the simplifying assumption that the tumbling automobile can be represented by a rolling, solid cylinder (i.e. the cylinder is rolling as it moves forward), the following relationships can be made.

$$v = r\omega \rightarrow \omega = \frac{v}{r}$$
$$I_o = \frac{1}{2}mr^2$$

Where,

r = Radius of cylinder

Substituting these relationships into the equation for equivalent translational velocity yields;

$$\frac{1}{2}m(v_{eq})^2 = \frac{1}{2}mv^2 + \frac{1}{2}\left(\frac{1}{2}mr^2\right)\left(\frac{v}{r}\right)^2$$

Solving for v_{eq} yields;

$$v_{eq} = \sqrt{\left\{v^2 + \left(\frac{v^2}{2}\right)\right\}}$$

Where,

v = translational velocity, 19 mph = 27.9 ft/sec

Therefore,

$$v_{eq} = \sqrt{\left\{\left(27.9\,\frac{ft}{s}\right)^2 + \left(\frac{(27.9\,ft/sec)^2}{2}\right)\right\}}$$

$$v_{eq} = 34.2\,\frac{ft}{s} \quad (23.3\,mph)$$

In order to solve the perforation depth equation (Eq. 2), the 3000 lb. automobile will be assumed to have the same perforation depth as a 12" diameter, 3000 lb. solid cylinder striking on the end of the cylinder, perpendicular to the culvert wall. Solving for perforation depth (P) is shown below.

W = Missile weight, 3000 lbs

D_m = Diameter of missile, 12 inches
[Note: For the purpose of solving the perforation depth equation, the automobile is modeled as an object with a 12" diameter impact area. This provides a more conservative result as compared to a large, 6' diameter impact area.]

V = Missile strike velocity, 23.3 mph = 34.2 ft/sec

f_c' = compressive strength of concrete, 4000 psi [References 6 and 7]

$$P = \frac{427}{\sqrt{4000}}\left(\frac{3000}{(12)^{1.8}}\right)\left(\frac{34.2}{1000}\right)^{1.33} = 2.60 \text{ inches}$$

Therefore, a 3000 lbs. rolling/tumbling automobile traveling a maximum of 19 mph will create a 2.60" deep perforation when impacting a 4000 psi compressive strength concrete wall. Since a concrete culvert has a 7" thick wall, the tumbling automobile will not penetrate through the culvert wall.

The above three calculations demonstrate that a culvert will resists the PC-3 tornado missile impacts (i.e. does not breach the culvert wall); therefore, it is judged that a closed concrete culvert, impacted by collapse of a light or moderate structure, will remain intact such that the contents do not contribute to the event MAR.

7. Assessment of Culvert to resist internal explosion events (FR 2)

A closed concrete culvert is required to provide containment (i.e. no breaching or removal of culvert wall/lid) of all contents in the event of an internal explosion/deflagration of an overpacked waste container. There are two types of waste containers that could be placed into a closed concrete culvert overpack;

- Drum,
- Standard Waste Box (SWB).

Reference 16 states that lid loss will not occur from deflagration in an SWB because the lid is very heavy and bolted onto the body of the box. Only failure of the SWB lid seal would result from a fire/deflagration in an SWB. Thus, ejection of an SWB is not a scenario that needs to be considered.

Reference 1 states that actual explosion testing performed in 1986 indicated that deflagration in a drum resulted in drum lid loss. This testing measured the drum lid ejection velocity to be 74 mph. The weight of a 55-gallon drum lid (W) is estimated below.

$$W = (\pi)(r)^2(t)(\rho)$$

Where,

r = Lid radius, 12"
t = Lid thickness, 0.05998" (16 gauge steel)
ρ = Material density, 500 lbs/ft^3 (maximum steel density)

Solving for W;

$$W = (\pi)(12\ in)^2(0.05998\ in)\left(\frac{500\ lbs}{ft^3}\right)\left(\frac{ft^3}{1728\ in^3}\right) = 7.85\ lbs$$

Since this is a calculated value for drum lid weight, to add conservatism to this calculation, the drum lid weight is assumed to be 10.0 lbs.

The energy imparted to the culvert lid as a result of ejection of a drum lid (E_{lid}) can be calculated by the following equation;

$$E_{lid} = \frac{1}{2}mv^2$$

Where,

m = drum lid mass, 10 lbs_m

v = drum lid translational velocity, 74 mph = 108.5 ft/sec

$$E_{lid} = \frac{1}{2}(10\ lbs_m)\left(\frac{108.5\ ft}{sec}\right)^2\left(\frac{lbs_f * sec^2}{32.174\ lbs_m * ft}\right) = 1{,}829\ lbs_f$$

The minimum weight of a culvert lid is 2600 lbs_m (Reference 10). The amount of force (lbs_f) it would take to move/displace the culvert lid (E_{move}) is calculated below.

$$E_{move} = (2600\ lbs_m)\left(\frac{1\ lbs_f}{1\ lbs_m}\right) = 2{,}600\ lbs_f$$

Since the energy imparted to the culvert lid from the ejected drum lid (E_{lid}) is less than the energy necessary to move the culvert lid (E_{move}), the culvert lid is not displaced during a drum lid ejection event.

The perforation depth of a drum lid impact into the culvert lid can be calculated using the equation 2 (Eq. 2);

$$P = \frac{427}{\sqrt{f_c'}}\left(\frac{W}{(D_m)^{1.8}}\right)\left(\frac{V}{1000}\right)^{1.33}$$ [Reference 10] (Eq. 2)

Where,

P = Perforation depth, inches

f_c' = compressive strength of concrete, 4000 psi

W = Drum Lid weight, 10 lbs

D_m = Diameter of lid impact, inches

V = Drum lid strike velocity, 108.5 ft/sec

The maximum perforation depth would occur if the drum lid impacted the culvert lid in a perpendicular orientation. Since the drum lid has a 0.5" radius rolled edge, the diameter of impact is assumed to be 1.0". This is a very conservative since the impact would result in significant deformation to the drum lid, resulting a larger lid impact area and adsorption of impact energy.

Solving for perforation depth;

$$P = \frac{427}{\sqrt{4000}}\left(\frac{10}{(1.0)^{1.8}}\right)\left(\frac{108.5}{1000}\right)^{1.33} = 3.52 \text{ inches}$$

Since the lid thickness is 6" (References 6 and 7), the culvert lid will not be breached in the event of a drum deflagration and subsequent drum lid ejection into the culvert lid.

In summary, a closed concrete culvert will provide containment (i.e. no breaching or removal of culvert wall/lid) in the event of an internal explosion/deflagration of an overpacked waste container. An SWB deflagration does not cause a lid ejection and would therefore be completely contained by the closed concrete culvert. A drum deflagration does result in a drum lid ejection, however, the energy imparted from the drum lid to the concrete culvert lid is insufficient to move or breach the lid.

Closed Concrete Box Overpack (CBO) Physical Integrity Calculations

The closed Concrete Box Overpack (CBO) is a large concrete box designed as a CCCoE that can accommodate a SLB-2 waste container. The dimensions and physical characteristics of the CBO are identified in Input 2 (design drawing included as Attachment 1). To provide conservatism to these calculations, dimensional tolerances of +0.75" / -0.5" will be applied to both the internal and external box dimensions. These values will be applied to the nominal dimension used in these calculations (i.e. 0.75" added for a maximum dimension, 0.5" subtracted for a minimum dimension).

8. Assessment of CBO Sliding during Tornado/High Wind Event (FR 4)

Input Variables:

Maximum Wind Speed for high wind event = 133 mph	[Reference 5]
Maximum Wind Speed for tornado event = 180 mph	[Reference 5]
Max CBO Length = 132.75"	[Reference 8]
Max CBO Width = 93.75"	[Reference 8]
Max CBO Height = 105.75"	[Reference 8]
Empty CBO Weight = 32,100 lbs	[Reference 8]
Assumed Air Density, ρ_{air} saturated @20°C= 1.194 kg/m^3	[Reference 11]

Assumed Air Viscosity, μ_{air} @20°C = 1.8E-5 kg/m*sec [Reference 10]

The force produced by the wind, incident upon the face of the CBO, during this event is given by the following equation that is derived from the definition of Drag Coefficient (Reference 11):

$$F_{wind} = \left(\frac{0.5}{g_c}\right)\left(C_{drag}\right)(D_{air})(A)(V)^2$$ [Reference 11] (Eq. 1)

Where:

F_{wind} = Force of Wind, N

C_{drag} = Drag Coefficient, *dimensionless*

D_{air} = Air Density, $\frac{kg}{m^3}$

A = Area presented to the wind, m^2

V = Air Velocity, $\frac{m}{sec}$

g_c = Force Conversion Factor, 1 $\frac{kg*m}{N*sec^2}$

Attachment 2 includes a table of C_{drag} for several common shapes. The C_{drag} for a cube would be appropriate to assign to the CBO. Therefore, C_{drag} for the CBO is equal to 1.10. Note the table in Attachment 2 is consistent with Reference 10 which was used to estimate C_{drag} for the concrete culvert (calculated to be 0.38, conservatively assigned a value of 0.5 for the culvert).

The maximum area of the CBO presented to the wind is given by the following equation;

A = (CBO Length) * (CBO Height)

$$A = \left(\frac{132.75\ inches}{}\right)\left(\frac{105.75\ inches}{}\right)\left(\frac{1\ m}{39.37\ inches}\right)^2$$

A = 9.06 m^2

Using these values for the drag coefficient, the area presented to the wind, and the maximum wind speed of 180 mph (80.46 m/s), the equation for the force of the wind on the CBO (Eq. 1) can be solved.

$$F_{wind} = \left(\frac{0.5\ N*sec^2}{kg*m}\right)(1.10)\left(\frac{1.194\ kg}{m^3}\right)(9.06\ m^2)\left(\frac{80.46\ m}{sec}\right)^2$$

$\boldsymbol{F_{wind} = 38,517\ N}$

An alternate methodology to calculate the force of wind on the CBO (F_{wind}) is outlined in Reference 5, Section 5.2.1.7. Using this alternate methodology (Reference 5 recommends using the methodology of Section 28.4.1 of ASCE/SEI 7 Minimum Design Loads For Buildings and Other Structures), the resultant F_{wind} is approximately 30% lower. Since Equation 1 resulted in a higher (i.e. more conservative) estimate of the wind force on a culvert, the methodology of Equation 1 was used for this calculation.

The minimum force required for a CBO to slide can be calculated using the following equation;

$$F_{min} = (m_{CBO})(g)(C_{friction})$$ [Reference 12]

Where,

F_{min} = Minimum force required to slide a CBO, N

m_{CBO} = Mass of CBO (conservative empty weight used) = 32,100 lbs = 14,560 kg

g = Acceleration of gravity, 9.8066 m/s^2

$C_{friction}$ = Coefficient of friction for concrete on concrete = 0.3 [Reference 13]

Therefore,

$$F_{min} = (14{,}560\ kg)\left(\frac{9.8066\ m}{s^2}\right)(0.3)$$

$\boldsymbol{F_{min} = 42,835\ N}$

Thus, it takes at least 42,850 N of force to slide/move a CBO. Since the force of the wind on the CBO (e.g. 38,517 N) is less than the force needed to slide the CBO, the CBO will not slide/move during a tornado/high wind event. This conclusion is valid for a CBO fabricated to the dimensional tolerances of Reference 8.

9. Assessment of CBO Tipping during Tornado/High Wind Event (FR4)

The force diagram in Figure 3 illustrates the forces/moments that apply in a CBO tipping/overturning event.

Figure 3

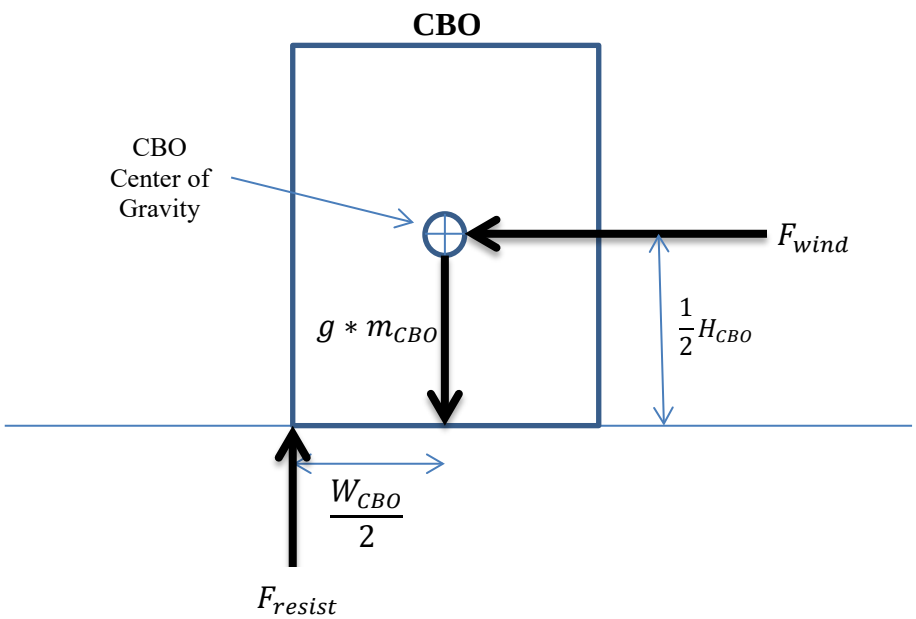

Conducting a force balance on Figure 3, it can be seen that the moment that must be exceeded to overturn a CBO (M_{OT}) is given by the following equation;

$$M_{OT} = \left(\frac{W_{CBO}}{2}\right)(F_{restore}) = \left(\frac{W_{CBO}}{2}\right)(m_{CBO})(g)$$

Where,

M_{OT} = Minimum moment required to overturn a CBO, N*m

F_{resist} = Minimum force to prevent overturning, N

W_{CBO} = Min Width of CBO = 92.5 inches = 2.35 m

m_{CBO} = Mass of CBO (conservative empty weight used) = 32,100 lbs = 14,560 kg

g = Acceleration of gravity, 9.8 m/s^2

Solving for minimum overturning moment,

$$M_{OT} = \left(\frac{2.35\ m}{2}\right)(14{,}560\ kg)\left(\frac{9.8\ m}{s^2}\right)$$

$$\boldsymbol{M_{OT} = 167{,}658\ N * m}$$

The overturning moment applied by the calculated maximum force applied to the CBO by the wind ($F_{wind} = 38{,}517\ N$) is given by the following equation (See Figure 3);

$$M_{wind} = \left(\frac{1}{2}\right)(F_{wind})(H_{CBO})$$

Where,

H_{CBO} = Max Height of CBO = 105.75 inches = 2.69 m

Solving for moment applied to the CBO by the maximum wind,

$M_{wind} = (0.5)(38{,}517\ N)(2.69\ m)$

$\boldsymbol{M_{wind} = 51{,}805\ N * m}$

Thus, it takes a moment of at least 167,658 N∗m to overturn a CBO. Since the moment of the wind on the CBO (e.g. 51,805 N∗m) is less than the moment needed to overturn the CBO, the CBO will not overturn during a tornado/high wind event. This conclusion is valid for a CBO fabricated to the dimensional tolerances of Reference 8.

10. Assessment of CBO Lid Loss during Tornado/High Wind Event (FR4)

The maximum pressurization change associated with a PC-3 tornado ($\Delta P_{tornado}$) is 70 lbs_f/ft^2 (Reference 1). The total lifting force exerted on the CBO lid during this pressurization change ($F_{\Delta press}$) can be calculated as follows;

$$F_{\Delta press} = (\Delta P_{tornado})(A)$$

Where,

A = Area of CBO Lid exposed to $\Delta P_{tornado}$, m^2

The max inner length of a CBO is 120.75" = 10.06 ft [Reference 8]
The max inner width of a CBO is 81.75" = 6.81 ft [Reference 8]

$A = (CBO\ Inner\ Length)(CBO\ Inner\ Width) = (10.06\ ft)(6.81\ ft) = 68.51\ ft^2$

Solving for $F_{\Delta press}$,

$$F_{\Delta press} = \left(\frac{70\ lbs_f}{ft^2}\right)(68.51\ ft^2)$$

$\boldsymbol{F_{\Delta press} = 4{,}796\ lbs_f}$

Thus, the lifting force on the CBO lid during a PC-3 tornado is 4,796 lbs_f. The weight of a CBO lid is 5,100 lbs (Reference 8). Converting lbs_f to lbs_m, (1 lbs_f = 1 lbs_m), the weight of the lid is more than the tornado lifting force. Since the maximum lifting force of a PC-3 tornado is less than the weight of a CBO lid, the lid will not lift off the CBO. This conclusion is valid for a CBO fabricated to the dimensional tolerances of Reference 8.

11. Assessment of CBO Overturning during Seismic Event (FR 4)

A PC-3 seismic event will impart a maximum acceleration of 0.375 g (Reference 5), where g = acceleration of gravity (9.8 m/sec^2). Thus, the maximum horizontal force imparted to the CBO is given below;

$$F_{hor} = Horizontal\ Seismic\ Force = (0.375)\left(9.8\ \frac{N}{kg}\right) = 3.675\ \frac{N}{kg}$$

This horizontal seismic force is applied to the CBO in a lateral direction through the center of gravity as shown in Figure 4 below.

Figure 4

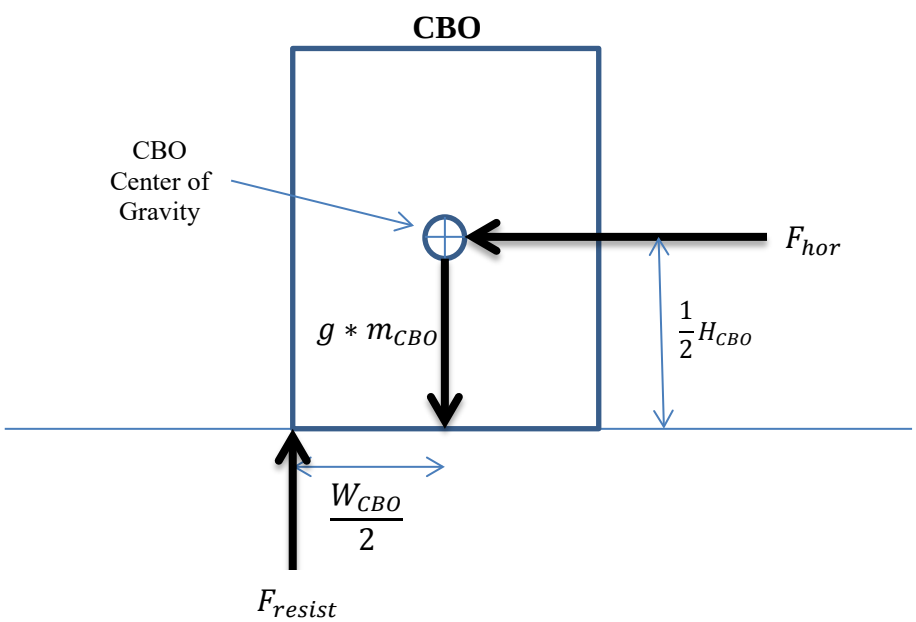

Where;

H_{CBO} = Max Height of CBO = 105.75 inches = 2.69 m

W_{CBO} = Min Width of CBO = 92.5 inches = 2.35 m

m_{CBO} = Mass of CBO (conservative empty weight used) = 32,100 lbs = 14,560 kg

g = force of gravity = 9.8 m/sec^2

F_{resist} = Resisting force (prevents CBO from overturning)

A force balance of Figure 4 reveals that seismic overturning moment is equal to:

$$M_{seismic} = (F_{hor})(m_{CBO})\left(\frac{1}{2}H_{CBO}\right)$$

The moment that resists overturning (results from F_{resist}) is equal to:

$$M_{resist} = (m_{CBO})(g)\left(\frac{W_{CBO}}{2}\right)$$

As long as M_{resist} is greater than $M_{seismic}$, the CBO will not overturn.

Solving the two torque moment for a CBO in a PC-3 seismic event yields;

$M_{seismic} = \left(3.675\ \frac{N}{kg}\right)(14560\ kg)\left(\frac{1}{2}\right)(2.69\ m)$ = 71,968 N∗m

$M_{resist} = (14560\ kg)\left(9.8\frac{m}{sec^2}\right)\left(\frac{2.35\ m}{2}\right)$ = 167,658 N∗m

Since the overturning moment of a PC-3 seismic event on the CBO (e.g. 71,968 N∗m) is less than the calculated CBO resisting moment, the CBO will not overturn during a PC-3 seismic event. This conclusion is valid for a CBO fabricated to the dimensional tolerances of Reference 8.

12. Assessment of CBO as a 3 Hour Thermal Barrier (FR 1)

Table 1 (Reference 15) presents the Factory Mutual equivalent fire ratings for reinforced concrete walls.

The fire rating of a reinforced concrete wall is dependent on the wall thickness and the aggregate used in the concrete. Reference 8 reports that CBO is fabricated with a lightweight concrete that contains Stalite lightweight aggregate. Since Reference 9 allows a CBO to have a minimum wall, lid, and bottom thickness of 5.5”, the CBO fire endurance rating is greater than 3 hours. This conclusion is valid for a CBO fabricated to the dimensional tolerances of Reference 8.

Table 1
Fire Endurance and Minimum Thickness of Concrete Walls

Concrete Aggregate Type	Fire Endurance (Hours)									
	1		1.5		2		3		4	
	Minimum Thickness									
	in.	mm	in.	mm	in.	mm	in.	mm	in.	mm
Siliceous	3.5	89	4.3	109	5.0	127	6.2	157	7.0	178
Calcerous	3.2	81	4.0	102	4.6	117	5.7	145	6.6	168
Lightweight	2.7	69	3.3	84	3.8	97	4.6	117	5.4	137

Note: Where combustible members frame into the wall, the fire endurance rating is governed by the thickness of solid concrete material between the end of each member and the opposite face of the wall or between members set in from opposite sides.

13. Assessment of CBO to resist external impacts during NPH event (FR 5)

A PC-3 tornado event includes three tornado missiles that should be considered (Reference 1).

13.1 Timber plank weighing 15 lbs. and traveling a maximum of 100 mph,
13.2 A 3" diameter steel pipe, 75 lbs., traveling a maximum of 75 mph,
13.3 A 3,000 lbs. automobile rolling and tumbling at 19 mph.

If a CBO resists these PC-3 tornado missile impacts (i.e. does not breach the CBO wall), it is judged that a closed CBO, impacted by collapse of a light or moderate structure, will remain intact such that the contents do not contribute to the event MAR.

Perforation depth of a missile into a concrete wall is calculated by the following equation;

$$P = \frac{427}{\sqrt{f_c'}}\left(\frac{W}{(D_m)^{1.8}}\right)\left(\frac{V}{1000}\right)^{1.33}$$ [Reference 10] (Eq. 2)

Where,

P = Perforation thickness, inches

f_c' = compressive strength of concrete, psi

W = Missile weight, lbs

D_m = Diameter of missile, inches

V = Missile strike velocity, ft/sec

Each of the three PC-3 tornado missile impacts is evaluated for a closed CBO in Sections 13.1 – 13.3.

13.1 Impact of a timber plank on a concrete wall

The equation for perforation of a missile into a concrete wall (P) (Eq. 2) was solved for a wooden 2x4 in the detailed calculation for a closed concrete culvert fabricated with 4000 psi compressive strength concrete (Section 6.1). The CBO is also fabricated with 4000 psi compressive strength concrete (Reference 8). Thus the calculated perforation depth is the same.

P = 1.41 inches

Therefore, a 2x4 timber plank weighing 15 lbs. and traveling a maximum of 100 mph will create a 1.41" deep perforation when impacting a 4000 psi compressive strength concrete wall. Since Reference 9 allows a CBO minimum wall thickness of 5.5", the timber will not penetrate through the CBO wall. This conclusion is valid for a CBO fabricated to the dimensional tolerances of Reference 8.

13.2 Impact of a 3" steel pipe on a concrete wall

The equation for perforation of a missile into a concrete wall (P) (Eq. 2) was solved for a 3" steel pipe in the detailed calculation for a closed concrete culvert fabricated with 4000 psi compressive strength concrete (Section 6.2). The CBO is also fabricated with 4000 psi compressive strength concrete (Reference 8). Thus the calculated perforation depth is the same.

$P = 2.82$ inches

Therefore, a 3" steel pipe weighing 75 lbs. and traveling a maximum of 75 mph will create a 2.82" deep perforation when impacting a 4000 psi compressive strength concrete wall. Since Reference 9 allows a CBO minimum wall thickness of 5.5", the steel pipe will not penetrate through the CBO wall. This conclusion is valid for a CBO fabricated to the dimensional tolerances of Reference 8.

13.3 Impact of a tumbling automobile on a concrete wall

The equation for perforation of a missile into a concrete wall (P) (Eq. 2) was solved for a tumbling automobile in the detailed calculation for a closed concrete culvert fabricated with 4000 psi compressive strength concrete (Section 6.3). The CBO is also fabricated with 4000 psi compressive strength concrete (Reference 8). Thus the calculated perforation depth is the same.

$P = 2.60$ inches

Therefore, a 3000 lbs. rolling/tumbling automobile traveling a maximum of 19 mph will create a 2.60" deep perforation when impacting a 4000 psi compressive strength concrete

wall. Since Reference 9 allows a CBO minimum wall thickness of 5.5", the tumbling automobile will not penetrate through the CBO wall. This conclusion is valid for a CBO fabricated to the dimensional tolerances of References 8 and 9.

The above three calculations demonstrate that a CBO fabricated in accordance with Reference 8 will resist the PC-3 tornado missile impacts (i.e. does not breach the CBO wall); therefore, it is judged that a closed CBO, impacted by collapse of a light or moderate structure, will remain intact such that the contents do not contribute to the event MAR.

14. Assessment of CBO to resist internal explosion events (FR 2)

A closed CBO is required to provide containment (i.e. no breaching or opening of CBO wall/lid) of all contents in the event of an internal explosion/deflagration of an overpacked waste container. There are three types of containers that could be placed into a closed CBO;

- Drum,
- Standard Waste Box (SWB),
- Standard Large Box (SLB-2).

Reference 16 states that lid loss will not occur from deflagration in an SWB because the lid is very heavy and bolted onto the body of the box. Only failure of the SWB lid seal will result from a fire/deflagration in an SWB. Thus, ejection of an SWB is not a scenario that needs to be considered.

Reference 17 (I&A# I CO LSB 1) states that due to the similarity between an SWB and SLB-2, the SLB-2 will not experience lid loss during small pool fires. The fact that an SLB-2 lid is heavier and is fastened in a similar manner, as compared to an SWB, is the basis for this DSA Input & Assumption. Due to the similarity in SWB and SLB-2 lid and closure design, it is also reasonable to conclude that an SLB-2 would not experience lid ejection during a container deflagration (since the SWB does not experience lid loss during container deflagration per Reference 16). Only failure of the SLB-2 lid seal will result from a fire/deflagration in an SLB-2. Thus, ejection of an SLB-2 lid is not a scenario that needs to be considered.

The energy imparted from an ejected drum lid to a concrete culvert lid was calculated to be (see Section 7);

$$E_{lid} = 1{,}829\ lbs_f$$

The weight of a CBO lid is 5,100 lbs_m (Reference 8). The amount of force (lbs_f) it would take to move/displace the CBO lid (E_{move}) is calculated below.

$$E_{move} = (5100\ lbs_m)\left(\frac{1\ lbs_f}{1\ lbs_m}\right) = 5{,}100\ lbs_f$$

Since the energy imparted to the CBO lid from the ejected drum lid (E_{lid}) is less than the energy necessary to move the CBO lid (E_{move}), the CBO lid is not displaced during a drum lid ejection event.

The perforation depth of a drum lid impact into the culvert lid was calculated to be (see Section 7);

P =3.52 inches

Since Reference 9 allows a CBO minimum wall thickness of 5.5", the CBO lid will not be breached in the event of a drum deflagration and subsequent drum lid ejection into the CBO lid.

In summary, a closed CBO will provide containment (i.e. no breaching or removal of CBO wall/lid) in the event of an internal explosion/deflagration of an overpacked waste container. Neither SWB nor SLB-2 deflagrations would result in a lid ejection and would therefore be completely contained by the closed CBO. A drum deflagration does result in a drum lid ejection, however, the energy imparted from the drum lid to the CBO lid is insufficient to move or breach the CBO lid. These conclusions are valid for a CBO fabricated to the dimensional tolerances of References 8 and 9.

Conservatisms

All conservative assumptions utilized are identified in each respective calculation. In general, a universal conservative assumption is use of the empty culvert/box weight for all calculations. This is a conservative assumption since higher container weights require greater forces to slide or tip.

Results

This calculation uses the physical dimensions and weight of a closed concrete culvert and closed CBO to calculate compliance with Functional Requirements (FR) 1-5 of Reference 1. The results for each FR is summarized below

FR1. During external fire events, the CCCoE functions as a 3-hour thermal barrier

- Based on Reference 14, the concrete culvert fire endurance rating is greater than 3 hours.
- Based on Reference 15, the CBO fire endurance rating is greater than 3 hours.

FR2. During internal explosion events, the CCCoE provides a confinement function by limiting the release of material by absorbing or deflecting the forces associated with an internal deflagration.

- A closed concrete culvert was shown to provide containment (i.e. no breaching or removal of culvert wall/lid) in the event of an internal explosion/deflagration of an overpacked waste container. A SWB deflagration does not result in a lid ejection and would be completely contained by the closed concrete culvert. The energy imparted from an ejected drum lid is insufficient to move or breach the culvert lid.
- A closed CBO was shown to provide containment (i.e. no breaching or removal of CBO wall/lid) in the event of an internal explosion/deflagration of an overpacked waste container. A SWB or SLB-2 deflagration does not result in a lid ejection and would be completely contained by the closed CBO. The energy imparted from an ejected drum lid is insufficient to move or breach the CBO lid.

FR3. During seismic events, the CCCoE must be of sufficient mass and dimensions to prevent tipping.

- The tipping torque of a PC-3 seismic event on a culvert is less than the calculated culvert restoring torque; therefore a culvert will not tip during a PC-3 seismic event.
- The tipping torque of a PC-3 seismic event on a CBO is less than the calculated CBO restoring torque; therefore a CBO will not tip during a PC-3 seismic event.

FR4. During tornado/high wind events, the CCCoE must be of sufficient mass and dimensions to prevent tipping, sliding, or lid loss.

- The force from a tornado/high wind event on the culvert is less than the force needed to slide the culvert; therefore, the culvert will not slide/move during a tornado/high wind event.
- The torque from a tornado/high wind event on the culvert is less than the torque needed to tip the culvert; therefore the culvert will not tip during a tornado/high wind event.
- The maximum lifting force of a PC-3 tornado is less than the weight of a culvert lid; therefore the lid will not lift off a culvert during a tornado/high wind event.
- The force from a tornado/high wind event on a CBO is less than the force needed to slide the CBO; therefore, the CBO will not slide/move during a tornado/high wind event.
- The torque from a tornado/high wind event on a CBO is less than the torque needed to tip the CBO; therefore the CBO will not tip during a tornado/high wind event.
- The maximum lifting force of a PC-3 tornado is less than the weight of a CBO lid; therefore the lid will not lift off a culvert during a tornado/high wind event.

FR5. During NPH events, the CCCoE must be impact resistant such that the collapse of light/moderate structures or falling structural objects (e.g. light fixtures, cable trays, or conduits) do not impact the Material At Risk (MAR) inside the CCCoE.

- A culvert was shown to resist the three specified PC-3 tornado missile impacts (i.e. does not breach the culvert wall); therefore, it is judged that a closed concrete culvert, impacted by collapse of a light or moderate structure, will remain intact such that the contents do not contribute to the event MAR.
- A CBO was shown to resist the three specified PC-3 tornado missile impacts (i.e. does not breach the culvert wall); therefore, it is judged that a closed CBO, impacted by collapse of a light or moderate structure, will remain intact such that the contents do not contribute to the event MAR.

Conclusion

This analysis outlined in this Engineering calculation demonstrates the the physical dimensions and weight of a closed concrete culvert (as described by Reference 6 and 7) and closed Concrete Box Overpack (as described by Reference 8 and 9) comply with Functional Requirements (FR) 1-5 of Reference 1. The Purpose and Objectives of this calculation have been met.

Attachment 1

Concrete Box Overpack Fabrication Drawing

Calculation Number	Sheet No.	Rev.
G-CLC-E-00308	33 of 35	1

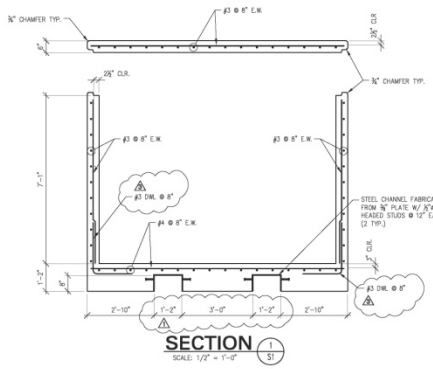

SECTION 1/S1
SCALE: 1/2" = 1'-0"

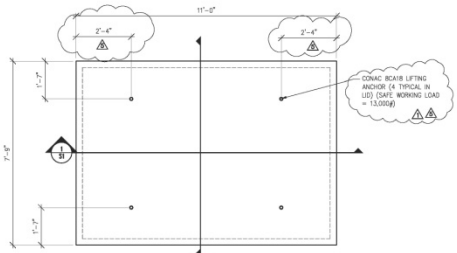

TOP PLAN
SCALE: 1/2" = 1'-0"

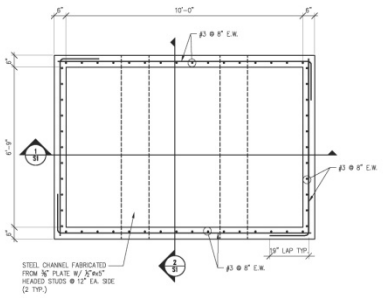

BOTTOM PLAN
SCALE: 1/2" = 1'-0"

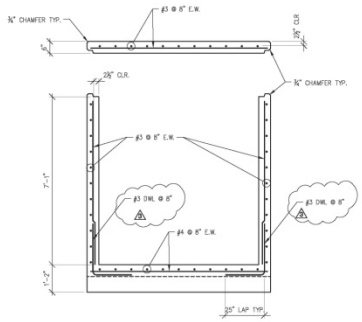

SECTION 2/S1
SCALE: 1/2" = 1'-0"

NOTES:

1. ALL CONCRETE AND REBAR AND THEIR INSTALLATION SHALL COMPLY WITH THE STANDARDS OF ACI-318, ACI-301 AND ASTM C-913 LATEST EDITIONS.
2. SUBMITALS:

   CONCRETE MIX DESIGNS PREPARED IN COMPLIANCE WITH ACI 318 ARTICLE 5.3 OR 5.4.

   MANUFACTURER'S INFORMATION ON CONCRETE ADMIXTURES AND OTHER PROPRIETARY MATERIALS
3. CONCRETE TESTING:

   MAKE ONE SET OF FOUR TEST CYLINDERS FOR EACH 20 CUBIC YARDS, OR PORTION THEREOF, OF CONCRETE PLACED. A QUALIFIED TESTING LAB SHALL PERFORM ALL TESTING. FOR EACH SET OF CYLINDERS, BREAK 1 CYLINDER AT 7 DAYS, 2 CYLINDERS AT 28 DAYS, AND HOLD 1 RESERVE CYLINDER.
4. REINFORCING STEEL SHALL CONFORM TO ASTM A-706-05a, GRADE 60. 11-18-13
5. THE 28 DAY MINIMUM COMPRESSIVE STRENGTH OF CONCRETE SHALL BE 4000 PSI LIGHTWEIGHT.
6. CONCRETE MIXES SHALL BE DESIGNED IN ACCORDANCE WITH ACI 301 AND THE FOLLOWING:

	MAX W/C RATIO	SLUMP
4000 PSI	0.45	3" TO 5"

   CONCRETE SHALL BE READY MIXED IN ACCORDANCE WITH ASTM C-94. SUBMIT CONCRETE MIX DESIGNS TO THE OWNER FOR APPROVAL.
7. CONCRETE MATERIALS SHALL COMPLY WITH THE FOLLOWING SPECIFICATIONS:

PORTLAND CEMENT:	ASTM C-150 TYPE I OR II
FLY ASH:	ASTM C-618
AGGREGATE (NORMAL WT.):	ASTM C-33
COARSE AGGREGATE:	ASTM C-330 STALITE
ADMIXTURES:	ASTM C-494, C-260, C989, & C-1017
8. FLY ASH SHALL BE NOT MORE THAN 25% OF TOTAL CEMENTITIOUS MATERIALS. DO NOT USE ADMIXTURES CONTAINING CALCIUM CHLORIDE.
9. CONCRETE DENSITIES SHALL BE AS FOLLOWS:

   LIGHTWEIGHT WEIGHT CONCRETE: 120 PCF
10. PROVIDE 5.5% AIR ENTRAINMENT.
11. UNLESS NOTED OTHERWISE ON THE DRAWINGS, ALL REINFORCING SPLICES SHALL BE ACI CLASS B TENSION LAPS. THE LAP LENGTH SHALL BE DETERMINED BY THE SIZE OF THE LARGER BAR PLACED.
12. UNLESS NOTED OTHERWISE ON THE DRAWINGS, DOWELS SHALL MATCH CORRESPONDING VERTICAL REINFORCING.
13. ALL REINFORCEMENT SHALL BE CONTINUOUS THROUGH CONSTRUCTION JOINTS UNLESS NOTED OTHERWISE.
14. PROVIDE 3/4" CHAMFER AT ALL EXPOSED EDGES OF CONCRETE WORK UNLESS NOTED OTHERWISE.
15. TOLERANCES FOR BOX DIMENSIONS ARE AS FOLLOWS:

INTERIOR DIMENSIONS:	+0.75" / −0.50"
ALL OTHER DIMENSIONS:	±0.25"
16. NO PAINTING OR COATINGS TO BE APPLIED TO INTERIOR OR EXTERIOR SURFACES OF THE BOX.

TENSION LAP SPLICE LENGTHS FOR GRADE 60 REINFORCING

BAR SIZE	4000 PSI CONCRETE LAP LENGTH CLASS B LAP
3	19"
4	25"

DESIGN WEIGHTS

DEAD LOADS:	
WEIGHT OF BOX (BASE)	27,000 #
WEIGHT OF BOX LID	5,100 #
TOTAL WEIGHT BOX & LID	32,100 #
LIVE LOADS:	
BOX CONTENTS (PER P.R.)	10,500 #
LID LIVE LOAD:	100 PSF

11-18-13 LIFTING ANCH
12-17-13 TOLERANCE

REVISIONS:

NO.	DATE	DESCRIPTION
1	10-18-13	OWNER COMMENTS
2	11-5-13	LIGHTWT. CONC.
3	11-12-13	DOWELS
4	11-13-13	MISC.

SEALS:

K & P ENGINEERING, INC. No.C01491 — NORTH CAROLINA — CERTIFICATE OF AUTHORIZATION

No.12395 10-15-13 — NORTH CAROLINA PROFESSIONAL ENGINEER SEAL — DAVID A. HILL

PROJECT TITLE:
PRECAST CONCRETE WASTE STORAGE BOX
FOR
BLDG. 704-58E
SAVANNAH RIVER SITE
AIKEN, SC

GEORGIA-LINA PRECAST
100 Woodward Lake Road
Trenton, SC 29847

K & P ENGINEERING, INC.
STRUCTURAL ENGINEERS
478 Highway 378 West
Lexington, SC 29072
Telephone: (803) 359-6800
FAX: (803) 359-8022

SHEET TITLE:
WASTE STORAGE BOX PLANS & SECTIONS

SCALE:	1/2" = 1'-0"
DATE:	10-15-13
JOB NUMBER:	13-212
DWG NO.:	SRNS-1 VLT
DESIGNED BY:	DAH
DRAWN BY:	DAH
CHECKED BY:	DAH

SHEET NUMBER
S1
OF 1

Attachment 2
Drag Coefficients

Formulas for Mechanical and Structural Shock and Impact
Gregory Szuladzinski
CRC Press 2009
Page 747

Appendix C Aerodynamic Drag Coefficients

When a body is immersed in a steady fluid flow with a velocity v, the resultant aerohydrodynamic force, applied in the direction of the undisturbed flow is

$$W_D = \frac{1}{2}\rho v^2 C_D A \tag{C.1}$$

where
- ρ is the fluid density
- C_D is the drag coefficient
- A is the reference area, usually the frontal area or section area normal to the flow

The drag coefficients for common shapes are tabulated below.

Drag Coefficient C_D for Common Shapes

Object	C_D
Sphere	0.47
Cube, face-on	1.10
Cube, edge-on	0.80
Circular cylinder, side-on	0.75
Square cylinder, side-on	2.00
Square cylinder, long edge-on	1.60
Triangular, 60° cylinder, face-on	2.20
Triangular, 60° cylinder, edge-on	1.39
Long circular cylinder, side-on, laminar	1.20
Long circular cylinder, side-on, turbulent	0.30
Long circular cylinder, end-on	1.00
Long, thin plate, face-on	1.40
Long, thin plate, edge-on	1.50
Open hemisphere, concave against wind	1.40
Open hemisphere, convex against wind	0.40
Disk, face-on	1.10

Sources: Douglas, J.F. et al., *Fluid Mechanics*, 2nd Edn. Longman Scientific & Technical, 1985; Streeter, V.L. et al., *Fluid Mechanics*, 9th Edn. WCB. McGraw-Hill, New York, 1998.

Note: There is a dependence of C_D on Reynolds number *Re*, most visible, perhaps, in case of a long circular cylinder, side-on, with a low value of 0.3 and a high of 1.2. The average is given above. For other shapes, typically much less sensitive, the values of C_D were given for $Re = 10{,}000$. For a long, thin plate the value is quoted for the side ratio of 15.

Project/Task: N/A	**Calculation Number:** G-CLC-E-00306	**Project/Task Number:** N/A
Title: Hydrogen Concentration in Closed Concrete Culverts or Equivalent Concrete Box Overpacks with TRU Waste Containers	**Functional Classification:** SS **Discipline:** Solid Waste	**Sheet:** 1 of 15
Calculation Type: [X] Type 1 [ ] Type 2	**Type 1 Calc Status:** [ ] Preliminary [X] Confirmed	
Computer Program No: N/A	**Version/Release No.:** N/A	

Purpose and Objective:

The Purpose of this calculation is to determine the maximum concentration of hydrogen in a Closed Concrete Culverts or Equivalent (CCCOE) being used to overpack TRU waste container(s) with a maximum of 8500 total PEC.

The Objective of this calculation is to demonstrate that the headspace gas in a closed concrete culvert and a closed concrete box overpack will not exceed the Lower Flammability Limit (LFL) during storage of a TRU waste container(s) with a maximum of 8500 total PEC.

Summary of Conclusion

The steady-state concentration of hydrogen in the headspace of a closed concrete culvert with 8500 PEC of TRU waste is 1.56 mol%.

The steady-state concentration of hydrogen in the headspace of a closed concrete box overpack with 8500 PEC of TRU waste is 0.629 mol%.

This calculation demonstrates the headspace gas of these two analyzed configurations will not reach the Lower Flammability Limit (LFL).

The Purpose and Objectives of this calculation have been met.

	Revisions
Rev #	Revision Description
0	Initial Release

Sign Off

Rev No.	Originator(s) (Print) Sign/Date	Verification/Checking Method	Verifier/Checker (Print) Sign/Date	Manager (Print) Sign/Date
0	D. Burns 10/23/13	☐ Design Check (GS/PS only) ☑ Document Review ☐ Qualification Testing ☐ Alternate Calculation ☐ Operational Testing	D.A. GRACY 10/29/13	P.N. FAIRCHILD 11/4/13
		☐ Design Check (GS/PS only) ☐ Document Review ☐ Qualification Testing ☐ Alternate Calculation ☐ Operational Testing		

Additional Reviewer (Print) STEVEN CROOK	Signature	Date 10/31/13
Design Authority (Print) S.J. Montrup	Signature S.J. Montrup	Date 10/31/13
Release to Outside Agency (Print) N/A	Signature N/A	Date N/A

Security Classification of the Calculation: Not Required by 7Q

REVIEWER(S):

NAME (PRINT OR TYPE)	SIGNATURE	DATE
D.A. Gracy	D.A. Gracy	10/29/13

		CIRCLE ONE		
1.	Are the Subject and/or Purpose clearly stated?	Yes	No	
2.	Are the required Input Data and their references and source provided and are they consistent with the Calc-note purpose?	Yes	No	
3.	Are the Assumptions clearly identified, valid, and consistent with the Calc-note purpose?	Yes	No	
4.	Is the Analytical Method or Approach Used clearly identified?	Yes	No	
5.	Are all pages consecutively numbered and identified by the Calc-note number?	Yes	No	
6.	Is/are the version(s) of the computer program(s) used identified and QA'd adequately?	Yes	No	N/A
7.	Are input listings for all computer programs documented in this Calc-note, and are they V&Vd and appropriate for the intended use?	Yes	No	N/A
8.	Are the Results and Conclusions clearly stated?	Yes	No	
9.	Are all OUTPUT documents included (or if not part of the calculation, clearly referenced in the Results section?) grammatically correct, clear and consistent with the main Calc-note text?	Yes	No	N/A
10.	Are the results, methods, input, and assumptions compatible with the stated purpose?	Yes	No	

IF NO TO ANY OF THE ABOVE, LIST SHEET NUMBER (S) WITH JUSTIFICATION AND OBTAIN MANAGER'S SIGNATURE BELOW:

N/A

JS 10/29/13

Manager's Signature

REVIEWER'S NOTES (use additional pages as necessary)

Review method used: document review

~~Alternate~~ calculation: ___ ~~Attached~~: Y___ N___

Approximated Originator's steps: NA JS 10/29/13

N/A

JS 10/29/13

TABLE OF CONTENTS

Section Sheet

References…….4

Introduction……...5

Open Items……....5

Inputs...……..5

Assumptions……..7

Analytical Methods and Computations…….....7

Figure 1 – Hydrogen Pressure Gradient Schematic.....8

Conservatisms.....13

Results.....13

Conclusion.....13

Attachment 1 – Concrete Box Overpack Drawing.....14

References:

1. WSRC-SA-22, "Savannah River Site Solid Waste Management Facility Documented Safety Analysis," Revision 20, May 2013.
2. WSRC-TS-95-16, "Solid Waste Management Facility Technical Safety Requirements," Revision 21, September 2012.
3. WSRC-RP-90-303, "Permeability and Porosity of SRS Concrete Culverts (U)," March 12, 1990.
4. M-SPP-G-00250, Procurement Specification for Concrete Storage Containers, Revision 5, August 29, 2000.
5. SRNS Purchase Order # 0000123102, Precast Concrete Box Storage Container with Lid, October 1, 2013.
6. S-CLC-E-00146, "Frequency of a Drum Breach in SWMF," Revision 0, January 16, 2013.
7. Drawing # C-CP-E-0006, "Transuranic Waste Storage Container Without Trunions Plan, Sections, and Details Concrete (U)," Revision 0, June 7, 1995.
8. Drawing # S5-2-9097, "Alpha Waste Concrete Burial Container," Revision 8, September 17, 1991.
9. Drawing # S1, Precast Concrete Waste Storage Box, Revision 1, October 18, 2013.
10. OSR19-287 Replacement Item Evaluation / Commercial Grade Item Dedication G-CGD-E-00001, Concrete Box Overpack, Revision 1.

Introduction:

The Solid Waste Management Facility (SWMF) Documented Safety Analysis (DSA) (Reference 1) identifies the safety function of a Closed Concrete Culvert or Equivalent (CCCoE) as limiting the radiological inventory available for release during identified SWMF accident scenarios. The DSA specifies six functional requirements of a CCCoE such that the safety function can be fulfilled. The SWMF Technical Safety Requirements (TSR) (Reference 2) also defines the five safety functions of a CCCoE. Both the DSA and TSR require that a CCCoE must be designed/fabricated such that the overpack headspace gas hydrogen concentration cannot exceed the Lower Flammability Limit (LFL). Reference 1 identifies the hydrogen LFL as 40,000 ppm (= 4.0 vol%). Fabrication of a CCCoE from a sufficiently permeable material of construction and limiting the maximum Plutonium Equivalent Curies (PEC) that can be overpacked into a CCCoE can ensure flammable headspace gas concentrations will not exceed the LFL. This calculation addresses the expected headspace flammable gas concentration in two CCCoE configurations.

Open Items:

None

Inputs:

Input 1

A conservative permeability (k) for SRS concrete culverts and concrete box overpacks that compensates for permeability reduction due to water and debris entrapment under actual field conditions is use of the lowest measured Klinkenberg permeability (k_∞) of SRS concrete culvert core-drilled samples ($k_\infty = 0.0382$ millidarcies).

Basis For Why This Input Is Valid:

Reference 3 documents laboratory gas permeability measurements of actual SRS concrete culvert core-drilled samples and samples of laboratory-prepared concrete mixes. The most conservative (i.e. lowest) Klinkenberg gas permeability value measured was 0.0382 millidarcies. The concrete box overpacks are fabricated with the same wall thickness and a similar concrete specification (i.e. 4,000 psi compressive strength with stone aggregate) that was used in the manufacture of the SRS concrete culverts (Reference 4 and 5). Therefore, gas permeability of the concrete box overpacks should be comparable to the SRS concrete culverts.

Input 2

The radiolytic hydrogen generation rate in SRS legacy TRU waste is 0.22 (millimoles H_2) / (day * PEC).

Basis For Why This Input Is Valid:

Reference 6 is an approved SRS Engineering Calculation that identified 0.22 millimoles / day / PEC as the radiolytic hydrogen generation rate in SRS TRU waste containers.

Input 3

Fluid Flow through porous media is described by the Darcy equation (Reference 3, Equation 1).

$$Q = \left(\frac{k}{\mu}\right)(A)\left(\frac{dP}{dL}\right)$$

Q = Volumetric Flow Rate, m^3 / hr

k = Permeability = darcy, $\frac{(cc/sec)(cp)}{(sq\ cc)(atm)/cm}$

μ = Viscosity, kg / (m * hr)

A = Area, m^2

$\frac{dP}{dL}$ = Pressure Gradient, (kg * m) / (hr^2 * m^2) (m)

Basis For Why This Input Is Valid:

Reference 3 is an approved Savannah River Laboratory technical report that calculated hydrogen concentrations in SRS culverts containing 1000 curies of high G-value (i.e. 4.0 molecules /100 eV) waste. Although the assumptions G-value and curie content are not applicable to this calculation, the gas permeability equations are applicable. The applicability of the Darcy Equation and the use of the measured Klinkenberg permeability is appropriate for this application and discussed in Reference 3.

Input 4

The physical dimensions of an SRS concrete culvert with fork pockets in the base are identified in drawing C-CP-E-0006 (Reference 7). The physical dimensions of an SRS concrete culvert without fork pockets in the base are identified in drawing S5-2-9097 (Reference 8).

Basis For Why This Input Is Valid:

References 7 and 8 are the currently approved versions of controlled drawings for SRS concrete culverts.

Input 5

The physical dimensions of an SRS concrete box overpack are identified in drawing S1, included as Attachment 1 (Reference 9).

Basis For Why This Input Is Valid:

Reference 9 is the approved fabrication drawings for manufacture of the SRS concrete box overpack. Container dimensions are verified through receipt inspection per the applicable Commercial Grade Dedication (CGD) G-CGD-E-00001 (Reference 10) for procurement of these container concrete box overpacks.

Input 6

The maximum radionuclide inventory in a CCCoE is 8,500 PEC.

Basis For Why This Input Is Valid:

Reference 1 identifies 8,500 PEC as the maximum radionuclide inventory allowed in a concrete overpack (i.e. CCCoE).

Assumptions:

None

Analytical Methods and Computations:

The objective of this calculation is calculate the concentration of hydrogen in the headspace of two closed concrete container overpacks (a closed concrete culvert and a closed concrete box overpack) containing a maximum radiologic content of 8,500 PEC.

The concentration of hydrogen gas in the overpack headspace is calculated by solving for the Darcy equation (Input 3) pressure gradient ($\frac{dP}{dL}$) with the volumetric flow rate of hydrogen (Q) equal to the hydrogen gas generation rate (Input 2). When the radiolytic generation of hydrogen equals the steady-state flow of hydrogen exiting the porous walls of the closed concrete container overpack steady-state is established. At this condition (see Figure 1), the pressure gradient ($\frac{dP}{dL}$) is solved across the concrete wall of the

overpack. dL is defined as the thickness of the porous wall. dP is the difference between the hydrogen partial pressure inside the overpack and outside the overpack. By making the simplifying assumption that the hydrogen partial pressure outside the overpack is equal to zero, dP is the equal to the hydrogen partial pressure inside the culvert. Also, assuming the pressure inside the culvert is always atmospheric pressure (i.e. the culvert does not pressurize as a result of radiolytic gas generation), and ideal gas law assumptions apply, the hydrogen partial pressure equals the hydrogen mol fraction in the overpack headspace gas.

Figure 1
Schematic of Hydrogen Pressure Gradient Across Overpack Wall

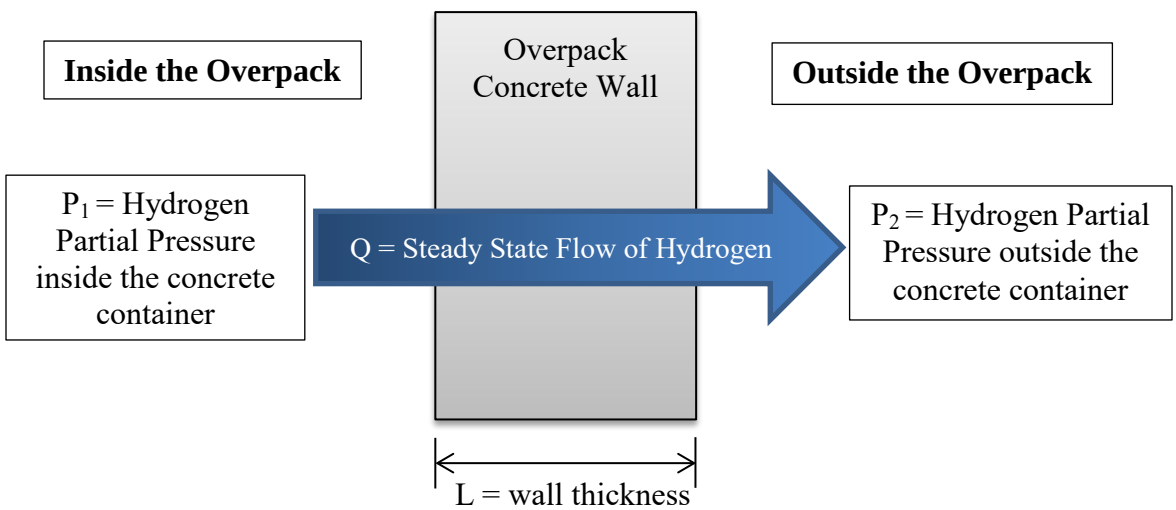

Radiolytic Hydrogen Concentration in a Closed Concrete Culvert

There are two types of concrete culverts in use at SRS. One type has a uniform 6" thick flat bottom (Reference 8). The second type has two 5" deep fork truck tine pockets cut into the 12" thick bottom (Reference 7). The concrete culverts with pockets have a 74" internal diameter (ID) and 6.5' internal height (H). The concrete culverts without pockets were fabricated with IDs of 74" and 72". The H of both of these culverts is 6.5'.

To solve the Darcy equation (Input 3) for $\frac{dP}{dL}$ in a closed concrete culvert, values for the following input variables are required:

Q = Volumetric Flow Rate, m^3 / hr

k = Hydrogen Permeability = darcy, $\frac{(cc/sec)(cp)}{(sq\ cc)(atm)/cm}$

μ = Hydrogen Viscosity, kg / (m * hr)

A = Porous Area, m^2

The value for hydrogen volumetric flow (Q) is calculated using the maximum inventory of isotopes that can generate hydrogen (8,500 PEC - Assumption 1) and the radiolytic generation rate for SRS TRU waste (0.22 (millimoles H_2) / (day * PEC) - Input 2).

$$Q = \left(\frac{0.22\ mmols\ H_2}{day*PEC}\right)\left(\frac{day}{24\ hours}\right)\left(\frac{8{,}500\ PEC}{}\right) = 77.9\ \frac{mmols\ H_2}{hour}$$

Assuming ideal gas behavior at standard temperature (T_s = 273°K) and pressure (P_s = 1 atm); 1 mol gas (n_s) = 22.4 liters (V_s)

$$\frac{PV}{P_sV_s} = \frac{nT}{n_sT_s}$$

Therefore, at 298°K,

$$\frac{(1\ atm)(V)}{(1\ atm)(22.4\ liters)} = \frac{(1\ mol)(298°K)}{(1\ mol)(273°K)}$$

V = 24.45 liters @ 298°K

Solving for Q @ 298°K;

$$Q = \left(\frac{77.9\ mmols\ H_2}{hour}\right)\left(\frac{mol}{1000\ mmols}\right)\left(\frac{24.45\ liters}{mol}\right)\left(\frac{m^3}{1000\ liters}\right) = 0.00190\ \frac{m^3}{hour}$$

k = 0.0382 millidarcies = 3.82E-5 $\frac{(cc/sec)(cp)}{(sq\ cc)(atm)/cm}$ [Input 1]

μ = hydrogen viscosity @ 1 atm and 298°K, kg / (m * hr) = 0.0089 centipoise [Ref. 3]

The porous area available for hydrogen diffusion out of a concrete culvert will be conservatively calculated by assuming all culverts have an internal diameter of 72" (results in minimum area) and the area of the bottom of the culvert will not be included (since the culvert bottom could be placed on a solid surface preventing diffusion to the atmosphere). Normal culvert labeling/marking does not have a significant impact on culvert porous area, particularly in light of other conservative assumptions in this calculation.

$$A_{cul} = \pi(ID)(H) + \frac{\pi}{4}(ID)^2$$

$$A_{cul} = \pi(72")(78") + \frac{\pi}{4}(72)^2$$

$$A_{cul} = \pi(72")(78") + \frac{\pi}{4}(72)^2 = 21{,}715 \text{ in}^2$$

$$A_{cul} = \left(\frac{21{,}715\ in^2}{}\right)\left(\frac{1\ m}{39.37\ in}\right)^2 = 14.01\ m^2$$

Inputting these values into the Darcy equation (Input 3), the steady-state hydrogen pressure gradient of a concrete culvert with 8,500 PEC of radiological loading can be determined.

$$Q = \left(\frac{k}{\mu}\right)\ (A)\ \left(\frac{dP}{dL}\right),$$

Therefore,

$$\left(\frac{dP}{dL}\right) = \left(\frac{Q}{A}\right)\left(\frac{\mu}{k}\right)$$

$$\left(\frac{dP}{dL}\right) = \left(\frac{0.00190\ m^3}{hr}\right)\left(\frac{1}{14.01\ m^2}\right)\left(\frac{0.0089\ cp}{}\right)\left(\frac{sec*atm}{3.82E{-}5\ cm^2*cp}\right)\left(\frac{100\ cm}{m}\right)^2\left(\frac{hr}{3600\ sec}\right)$$

$$\left(\frac{dP}{dL}\right) = 0.0878\ \frac{atm}{m}$$

The culvert wall is 7" thick. The culvert lid is 6" thick. To simplify the calculation (and add conservatism), all permeable walls are assumed to be 7" thick (7" = 0.178 m),

$$dL = 0.178 \text{ m}$$

Therefore,

$$dP = \left(0.0878\frac{atm}{m}\right)(0.178\ m) = 0.0156\ atm$$

As stated earlier, given the simplifying assumption the partial pressure of H_2 outside the culvert is zero; the partial pressure of H_2 in the culvert equals the calculated dP. Also, since, the total pressure inside the culvert equals 1 atmosphere, the concentration of H2 in the culvert is,

Culvert H_2 concentration = $\frac{0.0156\ atm\ H_2}{1\ atm}$ = 0.0156 mol fraction = 1.56 mol % H_2

<u>Radiolytic Hydrogen Concentration in a Closed Concrete Box Overpack</u>

To solve the Darcy equation (Input 3) for $\frac{dP}{dL}$ in a closed concrete box overpack, values for the following input variables are required:

Q = Volumetric Flow Rate, m^3 / hr

k = Hydrogen Permeability = darcy, $\frac{(cc/sec)(cp)}{(sq\ cc)(atm)/cm}$

μ = Hydrogen Viscosity, kg / (m * hr)

A = Porous Area, m^2

The value for hydrogen volumetric flow (Q) is calculated using the maximum inventory of isotopes that can generate hydrogen (8,500 PEC - Assumption 1) and the radiolytic generation rate for SRS TRU waste (0.22 (millimoles H_2) / (day * PEC) - Input 2).

$$Q = \left(\frac{0.22\ mmols\ H_2}{day*PEC}\right)\left(\frac{day}{24\ hours}\right)\left(\frac{8{,}500\ PEC}{}\right) = 77.9\ \frac{mmols\ H_2}{hour}$$

Assuming ideal gas behavior at standard temperature (T_s = 273°K) and pressure (P_s = 1 atm); 1 mol gas (n_s) = 22.4 liters (V_s)

$$\frac{PV}{P_sV_s} = \frac{nT}{n_sT_s}$$

Therefore, at 298°K,

$$\frac{(1\ atm)(V)}{(1\ atm)(22.4\ liters)} = \frac{(1\ mol)(298°K)}{(1\ mol)(273°K)}$$

V = 24.45 liters @ 298°K

Solving for Q @ 298°K;

$$Q = \left(\frac{77.9\ mmols\ H_2}{hour}\right)\left(\frac{mol}{1000\ mmols}\right)\left(\frac{24.45\ liters}{mol}\right)\left(\frac{m^3}{1000\ liters}\right) = 0.00190\ \frac{m^3}{hour}$$

k = 0.0382 millidarcies = 3.82E-5 $\frac{(cc/sec)(cp)}{(sq\ cc)(atm)/cm}$ [Input 1]

μ = hydrogen viscosity @ 1 atm and 298°K, kg / (m * hr) = 0.0089 centipoise [Ref. 3]

The porous area available for hydrogen diffusion out of a closed concrete box overpack will be calculated using the dimensions reported in Reference 9. The area of the bottom of the box will not be included (since the box bottom will be placed on a solid surface limiting diffusion to the atmosphere). Normal box labeling/marking does not have a

significant impact on concrete box porous area, particularly in light of other conservative assumptions in this calculation.

Box Internal Width (W) = 6.75 feet [Reference 9]
Box Internal Length (L) = 10.0 feet [Reference 9]
Box Internal Height (H) = 7.08 feet [Reference 9]

$$W = \left(\frac{6.75\ ft}{}\right)\left(\frac{1\ m}{3.2808\ ft}\right) = 2.06\ m$$

$$L = \left(\frac{10.0\ ft}{}\right)\left(\frac{1\ m}{3.2808\ ft}\right) = 3.28\ m$$

$$H = \left(\frac{7.08\ ft}{}\right)\left(\frac{1\ m}{3.2808\ ft}\right) = 2.16\ m$$

$$A_{box} = 2 * (W * H) + 2 * (H * L) + (W * L)$$

$$A_{box} = 2 * (2.06\ m * 2.16\ m) + 2 * (2.16\ m * 3.28\ m) + (2.06\ m * 3.28\ m)$$

$$A_{box} = 2 * (W * H) + 2 * (H * L) + (W * L)$$

$$A_{box} = 29.8\ m^2$$

Inputting these values into the Darcy equation (Input 3), the steady-state hydrogen pressure gradient of a closed concrete box overpack with 8,500 PEC of radiological loading can be determined.

$$Q = \left(\frac{k}{\mu}\right)\ (A)\ \left(\frac{dP}{dL}\right),$$

Therefore,

$$\left(\frac{dP}{dL}\right) = \left(\frac{Q}{A}\right)\left(\frac{\mu}{k}\right)$$

$$\left(\frac{dP}{dL}\right) = \left(\frac{0.00190\ m^3}{hr}\right)\left(\frac{1}{29.8\ m^2}\right)\left(\frac{0.0089\ cp}{}\right)\left(\frac{sec*atm}{3.82E{-}5\ cm^2*cp}\right)\left(\frac{100\ cm}{m}\right)^2\left(\frac{hr}{3600\ sec}\right)$$

$$\left(\frac{dP}{dL}\right) = 0.0413\ \frac{atm}{m}$$

The concrete box overpack wall and lid is 6” thick (6” = 0.1524 m),

dL = 0.1524 m

Therefore,

$$dP = \left(0.0413\,\frac{atm}{m}\right)(0.1524\ m) = 0.00629\ atm$$

As stated earlier, given the simplifying assumption the partial pressure of H_2 outside the concrete box is zero, the partial pressure of H_2 in the concrete box equals the calculated dP. Also, since, the total pressure inside the concrete box equals 1 atmosphere, the concentration of H_2 inside the concrete box is,

$$\mathbf{H_2\ concentration} = \frac{\mathbf{0.00629\ atm\ H_2}}{\mathbf{1\ atm}} = \mathbf{0.00629\ mol\ fraction = 0.629\ mol\ \%\ H_2}$$

Conservatisms

The conservatisms incorporated into this calculation are listed below:

- Use of the lowest measured Klinkenberg permeability provides a conservative estimate for permeability of hydrogen through the concrete container walls
- The porous wall surface area calculation omitted the bottom of the concrete container.
- Container "breathing" (aka diurnal cycling) due to daily temperature fluctuations would result in additional flammable gas venting.
- This calculation assumes the container is sealed.

Results

The steady-state concentration of hydrogen in the headspace of a closed concrete culvert with 8,500 PEC of TRU waste is 1.56 mol%.

The steady-state concentration of hydrogen in the headspace of a closed concrete box overpack with 8,500 PEC of TRU waste is 0.629 mol%.

Conclusion

This analysis demonstrates the headspace gas in the analyzed closed concrete overpack containers will not exceed the LFL when used to overpack TRU waste containers with a maximum total radiological inventory of 8,500 PEC. The Purpose and Objectives of this calculation have been met.

Attachment 1

Concrete Box Overpack Fabrication Drawing

Calculation Number	Sheet No.	Rev.
G-CLC-E-00306	15 of 15	0

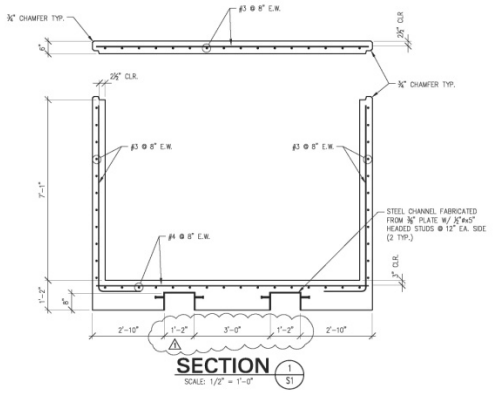

SECTION 1/S1
SCALE: 1/2" = 1'-0"

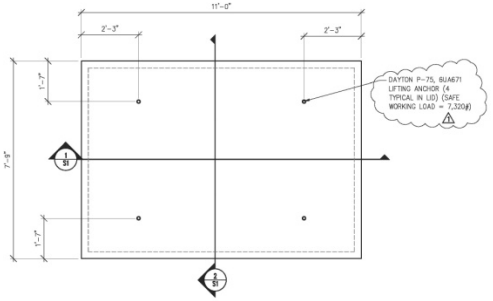

TOP PLAN
SCALE: 1/2" = 1'-0"

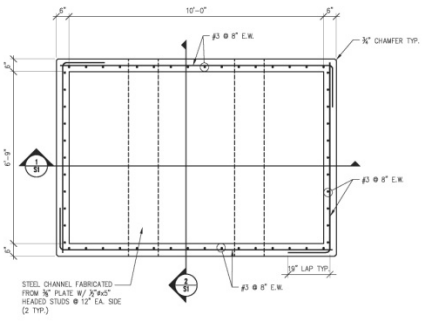

BOTTOM PLAN
SCALE: 1/2" = 1'-0"

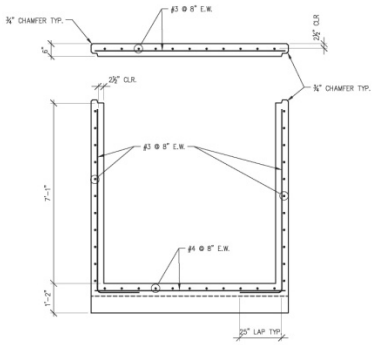

SECTION 2/S1
SCALE: 1/2" = 1'-0"

NOTES:

1. ALL CONCRETE AND REBAR AND THEIR INSTALLATION SHALL COMPLY WITH THE STANDARDS OF ACI-318, ACI-301 AND ASTM C-913 LATEST EDITIONS.
2. SUBMITALS:

   CONCRETE MIX DESIGNS PREPARED IN COMPLIANCE WITH ACI 318 ARTICLE 5.3 OR 5.4.

   MANUFACTURER'S INFORMATION ON CONCRETE ADMIXTURES AND OTHER PROPRIETARY MATERIALS
3. CONCRETE TESTING:

   MAKE ONE SET OF FOUR TEST CYLINDERS FOR EACH 20 CUBIC YARDS, OR PORTION THEREOF, OF CONCRETE PLACED. A QUALIFIED TESTING LAB SHALL PERFORM ALL TESTING. FOR EACH SET OF CYLINDERS, BREAK 1 CYLINDER AT 7 DAYS, 2 CYLINDERS AT 28 DAYS, AND HOLD 1 RESERVE CYLINDER.
4. REINFORCING STEEL SHALL CONFORM TO ASTM A-615, GRADE 60.
5. THE 28 DAY MINIMUM COMPRESSIVE STRENGTH OF CONCRETE SHALL BE 4000 PSI.
6. CONCRETE MIXES SHALL BE DESIGNED IN ACCORDANCE WITH ACI 301 AND THE FOLLOWING:

	MAX W/C RATIO	SLUMP
4000 PSI	0.45	3" TO 5"

   CONCRETE SHALL BE READY MIXED IN ACCORDANCE WITH ASTM C-94. SUBMIT CONCRETE MIX DESIGNS TO THE OWNER FOR APPROVAL.
7. CONCRETE MATERIALS SHALL COMPLY WITH THE FOLLOWING SPECIFICATIONS:

PORTLAND CEMENT:	ASTM C-150 TYPE I OR II
FLY ASH:	ASTM C-618
AGGREGATE (NORMAL WT.):	ASTM C-33
COARSE AGGREGATE:	#67 STONE
ADMIXTURES:	ASTM C-494, C-260, C989, & C-1017

8. FLY ASH SHALL BE NOT MORE THAN 25% OF TOTAL CEMENTITIOUS MATERIALS. DO NOT USE ADMIXTURES CONTAINING CALCIUM CHLORIDE.
9. CONCRETE DENSITIES SHALL BE AS FOLLOWS:

   NORMAL WEIGHT CONCRETE: 145 PCF
10. PROVIDE 5.5% AIR ENTRAINMENT.
11. UNLESS NOTED OTHERWISE ON THE DRAWINGS, ALL REINFORCING SPLICES SHALL BE ACI CLASS B TENSION LAPS. THE LAP LENGTH SHALL BE DETERMINED BY THE SIZE OF THE LARGER BAR PLACED.
12. UNLESS NOTED OTHERWISE ON THE DRAWINGS, DOWELS SHALL MATCH CORRESPONDING VERTICAL REINFORCING.
13. ALL REINFORCEMENT SHALL BE CONTINUOUS THROUGH CONSTRUCTION JOINTS UNLESS NOTED OTHERWISE.
14. PROVIDE 3/4" CHAMFER AT ALL EXPOSED EDGES OF CONCRETE WORK UNLESS NOTED OTHERWISE.
15. TOLERANCES FOR BOX DIMENSIONS ARE AS FOLLOWS:

INTERIOR DIMENSIONS:	+0.75" / -0.0"
ALL OTHER DIMENSIONS:	±0.25"

16. NO PAINTING OR COATINGS TO BE APPLIED TO INTERIOR OR EXTERIOR SURFACES OF THE BOX.

TENSION LAP SPLICE LENGTHS FOR GRADE 60 REINFORCING

BAR SIZE	4000 PSI CONCRETE LAP LENGTH CLASS B LAP
3	19"
4	25"

DESIGN WEIGHTS

DEAD LOADS:	
WEIGHT OF BOX (BASE)	32,652 #
WEIGHT OF BOX LID	6,180 #
TOTAL WEIGHT BOX & LID	38,832 #
LIVE LOADS:	
BOX CONTENTS (PER P.R.)	10,500 #
LID LIVE LOAD:	100 PSF

REVISIONS:

NO.	DATE	DESCRIPTION
1	10-18-13	OWNER COMMENTS

SEALS:

SOUTH CAROLINA K&P ENGINEERING, INC. No.C01491 CERTIFICATE OF AUTHORIZATION

SOUTH CAROLINA REGISTERED PROFESSIONAL ENGINEER No.12293 10-15-13 CHRISTOPHER T. KNAPP

PROJECT TITLE:
PRECAST CONCRETE WASTE STORAGE BOX
FOR
BLDG. 704-58E
SAVANNAH RIVER SITE
AIKEN, SC

GEORGIA-LINA PRECAST
100 Woodward Lake Road
Trenton, SC 29847

K & P ENGINEERING, INC.
STRUCTURAL ENGINEERS
478 Highway 378 West
Lexington, SC 29073
Telephone: (803) 808-8020
FAX: (803) 808-8022

SHEET TITLE:
WASTE STORAGE BOX PLANS & SECTIONS

SCALE:	1/2" = 1'-0"
DATE:	10-15-13
JOB NUMBER:	13-212
DESIGNED BY:	CTK
DRAWN BY:	CTK
CHECKED BY:	CTK

SHEET NUMBER
S1
OF 1