Waste Isolation Pilot Plant

. . . a critical step toward solving the nation's nuclear waste disposal problem

Transuranic Waste Transportation Containers

In 1980, the U.S. Department of Energy (DOE) committed to transporting transuranic radioactive waste to the Waste Isolation Pilot Plant (WIPP) in U.S. Nuclear Regulatory Commission (NRC)-certified Type B containers. DOE chose to have NRC approve these containers even though it is not a requirement. To obtain NRC approval, DOE must submit a safety analysis report for each transportation container, demonstrating compliance with applicable regulations.

Three Types of Containers

Container	Waste Type	Status of Certification
TRUPACT-II	Contact-Handled	Approved by NRC, August 1989
HalfPACT	Contact-Handled	Approved by NRC, November 2000
RH-72B	Remote-Handled	Approved by NRC, March 2000

Three different types of containers were proposed and approved for transporting transuranic waste to WIPP. The Transuranic Package Transporter Model 2 (TRUPACT-II) and HalfPACT were designed to carry contact-handled transuranic radioactive waste. The RH-72B will be used to facilitate remote-handled waste transportation.

TRUPACT-II

Each stainless steel TRUPACT-II is approximately eight feet in diameter, 10 feet high, and constructed with leaktight inner and outer containment vessels. The TRUPACT-II can hold up to 14 fifty-five gallon waste drums, two standard waste boxes (63 cubic feet capacity each), or one 10-drum overpack (a container designed to provide additional protection for older, deteriorating drums). The TRUPACT-II underwent extensive testing (*See page 4 for specifics*) at Sandia National Laboratories in Albuquerque, New Mexico.

TRUPACT-II Testing 20 Times More Severe Than Average Traffic Accident

According to the Vehicle Research Center, a division of the Insurance Institute for Highway Safety, the 30-foot drop test the TRUPACT-II design withstood is more severe than any conceivable highway accident.

The amount of force the TRUPACT-II can withstand is nearly 20 times more severe than an average highway accident.

In vehicle testing, a passenger car hitting a portion of a solid barrier at 30 miles per hour creates a force of approximately 20 times greater than gravity (g).

During free-drop testing, the TRUPACT-II collision with the concrete pad generated about 385 g and remained intact.

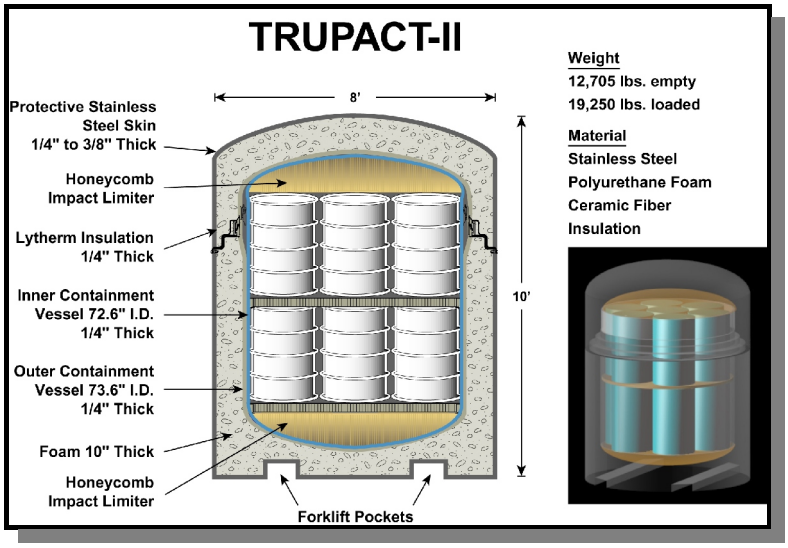

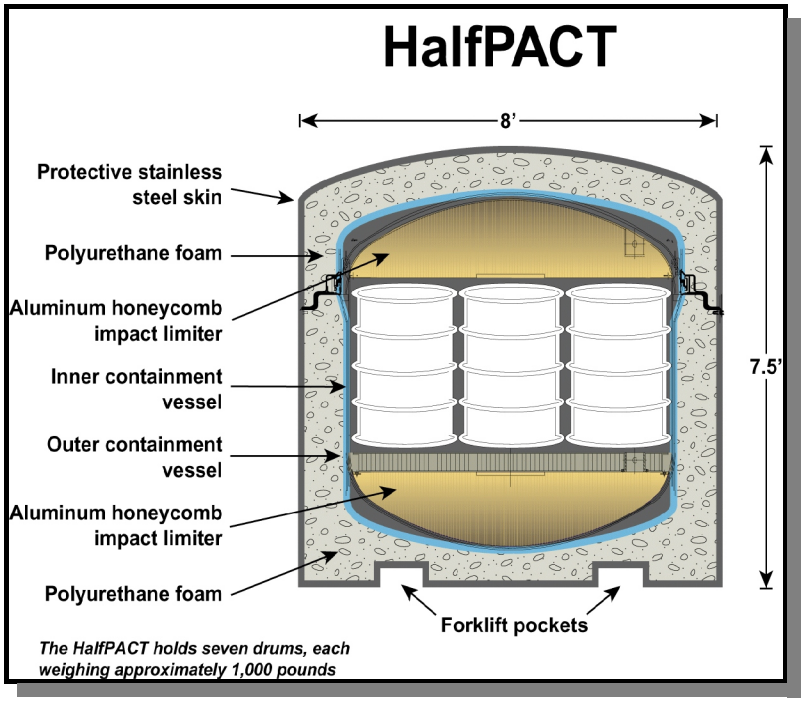

Some shipments to WIPP will consist of 55-gallon drums of contact-handled transuranic waste weighing as much as 1,000 pounds each. Although the TRUPACT-II transportation containers are designed to hold as many as 14 drums, the total shipment (including the truck and trailer) can weigh no more than 80,000 pounds under U.S. Department of Transportation (DOT) weight restrictions. To comply with these restrictions, shippers of heavier-than-average drums of transuranic waste would have to reduce the number of drums per container below the TRUPACT-II's 14-drum capacity.

To improve shipment efficiency for heavy drums of transuranic waste, DOE designed the HalfPACT, a container for contact-handled waste that is shorter, and therefore lighter, than the TRUPACT-II. Each HalfPACT can carry up to seven 1,000-pound waste drums, and each WIPP transport truck can haul up to three HalfPACTs. Because using the HalfPACT would allow a greater volume of heavy waste to be transported in each shipment, the number of shipments necessary – and, therefore, the potential for accidents – would be reduced. The HalfPACT is expected to eliminate about 2,000 shipments of transuranic waste over the 35-year operating life of WIPP.

Each HalfPACT, like the TRUPACT-II, is leaktight and constructed with inner and outer containment vessels. It is approximately seven and one-half feet high and about eight feet in diameter. The HalfPACT is designed to hold seven 55-gallon drums, four 85-gallon drums, or one standard waste box.

The NRC issued a certificate of compliance on November 2, 2000 for the HalfPACT transportation container.

Types of Transuranic Waste

Contact-Handled
About 96 percent of the volume of transuranic waste to be disposed of at WIPP is contact handled. This waste emits primarily alpha and beta radiation, which can be safely handled under controlled conditions without special shielding. The 55-gallon metal drums and boxes are ample protection from this kind of radiation.

Remote-Handled
Remote-handled transuranic waste emits penetrating gamma radiation that must be handled and transported in lead and steel-shielded transportation containers.

RH-72B

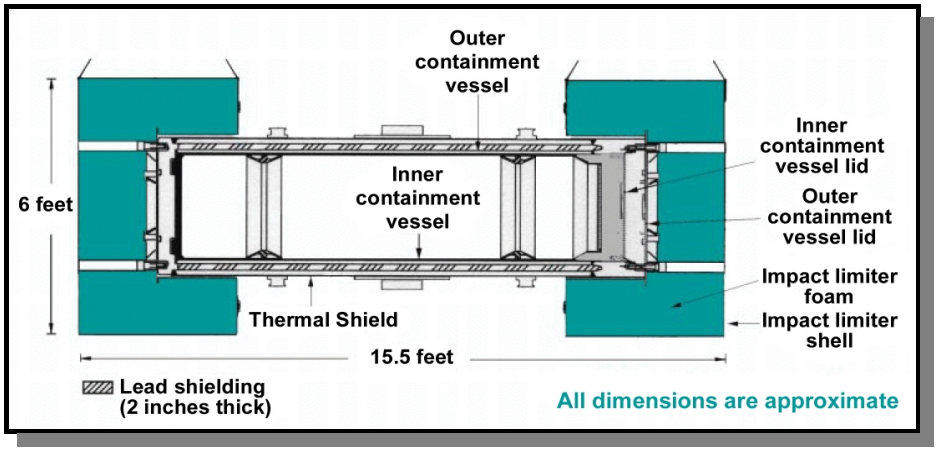

RH-72B

Some transuranic waste emits large amounts of penetrating gamma radiation. This "remote-handled" waste must be shipped in different containers that provide more shielding. The RH-72B was designed to safely transport these wastes. Like the TRUPACT-II and the HalfPACT, the RH-72B is leaktight and constructed with inner and outer containment vessels. It is a large cylinder approximately 12 feet long and about 3.5 feet in diameter. The cylinder fits into circular impact limiters, similar to shock absorbers, designed to protect the container and its contents in the event of an accident. The RH-72B has a one-and-5/8-inch-thick lead liner to shield people from gamma rays. It also has an outer thermal shield to protect the container against potential fire damage. Remote-handled shipments are expected to begin in 2002.

Pipe Overpack

In some cases, another container called a "pipe overpack" is used within the TRUPACT-II or HalfPACT to contain wastes contaminated with higher concentrations of plutonium and americium (*see drawing at right*). The filled pipe overpack is placed inside a 55-gallon drum, which, in turn, is placed inside the TRUPACT-II. The pipe overpack has three key functions:

- To maintain separation of fissile material (materials whose atomic nucleus has the ability to split into two or more nuclei, releasing large amounts of energy) to prevent an inadvertent uncontrolled nuclear chain reaction from occurring;
- To provide shielding from radiation; and
- To immobilize fine particulate waste material.

DOE estimates the pipe overpack will be used in less than five percent of contact-handled transuranic waste shipments.

NRC approved the use of pipe overpack as part of the TRUPACT-II. Pipe overpacks cannot be used to transport transuranic waste unless they are inside TRUPACT-IIs or HalfPACTs.

Pipe overpack testing at Sandia National Laboratories included a top-impact drop test, a side-impact drop test, and a leak test. There was no loss of container contents during these tests.

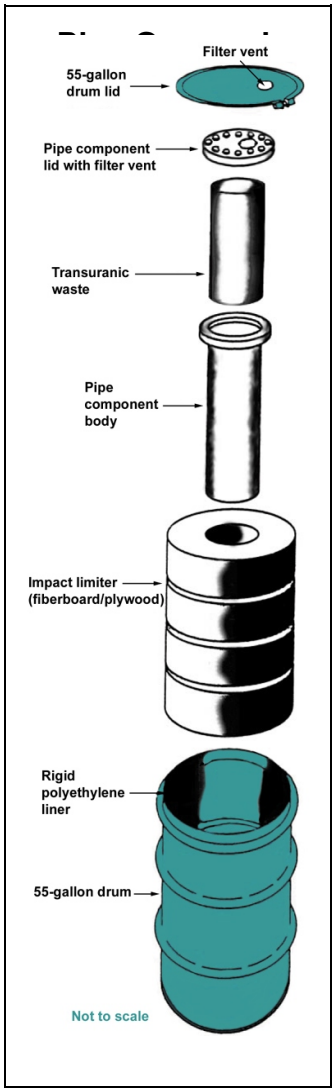

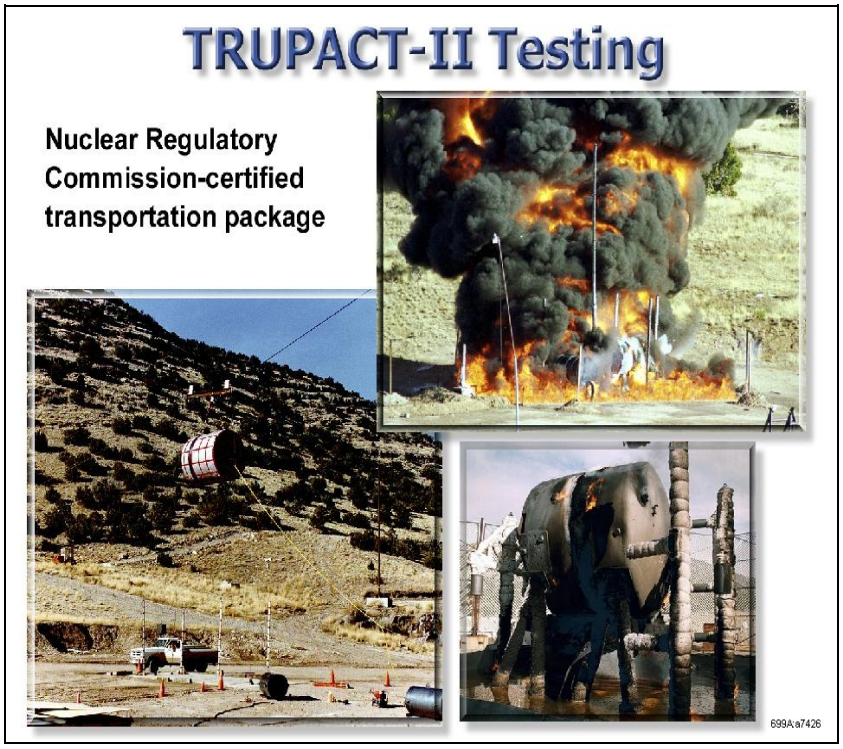

Testing and Certification

The TRUPACT-II, the HalfPACT, and the RH-72B are all known as Type B transportation containers. Type B transportation containers are double containment packages and must meet NRC design, fabrication, operation, and maintenance requirements. Designs for Type B transportation containers must withstand normal transportation conditions, such as exposure to high and low temperatures ranging from 100 degrees Fahrenheit to minus 40 degrees Fahrenheit, varying external pressure, vibration, heavy rainfall, drops during handling, drops onto each corner of the transportation container, compression of approximately five times the weight of the transportation container for 24 hours, and impact from debris.

In addition, NRC certification requires each Type B transportation container to withstand a series of hypothetical accidents to demonstrate its ability to withstand extreme conditions without breaking open or releasing radiation. The NRC regulations (10 Code of Federal Regulations Part 71) allow computer-simulated, scale-model, or full-scale model testing to demonstrate a transportation container's suitability for certification. A combination of these methods is commonly used. To gauge their cumulative effects on transportation container designs that are candidates for Type B certification, several tests, or analyses, are performed in the following sequence:

- Free-Drop Test. The transportation container is dropped from 30 feet onto a flat, unyielding surface (such as a steel-reinforced concrete pad), striking the surface at the container's weakest point.
- Puncture Test. Next, the transportation container is subjected to a 40-inch free drop onto a six-inch diameter steel bar at least eight inches long.
- Burn Test. The transportation container is drenched with jet fuel and ignited, subjecting it to a temperature of 1,475 degrees Fahrenheit for 30 minutes.
- Immersion Test. Using specialized analyses, a separate transportation container of the same design is subjected to external pressure equivalent to being immersed under 50 feet of water.

When all the requirements for design and testing are met, NRC issues a Certificate of Compliance for the design of the transportation container. The certificate specifies procedures for the manufacture, operation, and maintenance of the transportation container. It also defines the container's authorized contents. The certificate is valid for five years. At the end of this period, DOE may apply to renew a container's certification.

For More Information on WIPP:

U.S. Department of Energy
Carlsbad Field Office
P.O. Box 3090
Carlsbad, NM 88221
Phone: 1-800-336-WIPP (9477)
E-mail: Infocntr@wipp.ws
Internet: http://www.wipp.ws