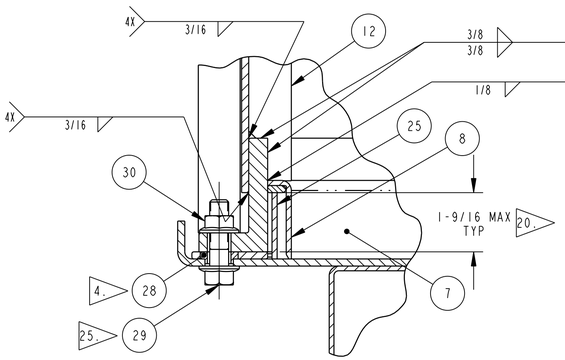

SECTION A-A
SCALE 1:2

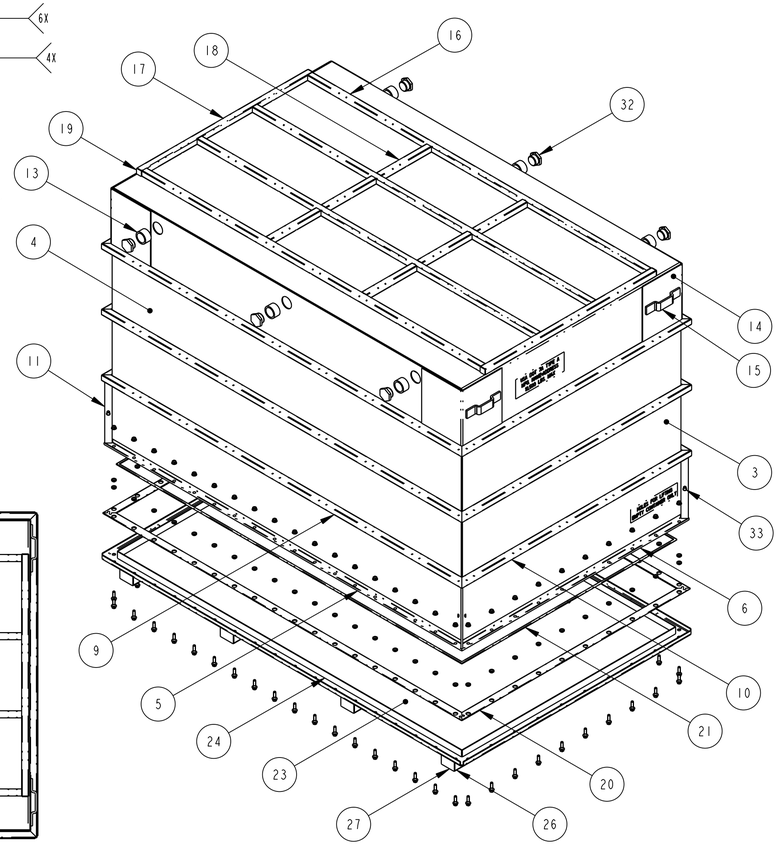

REFERENCE VIEW

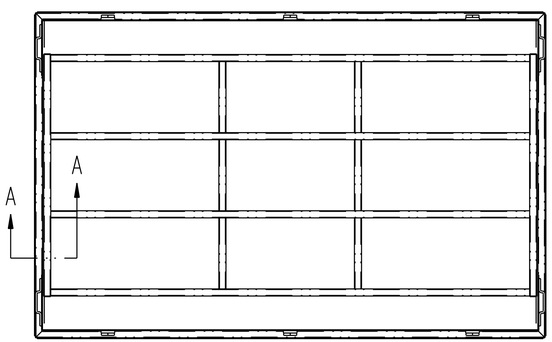

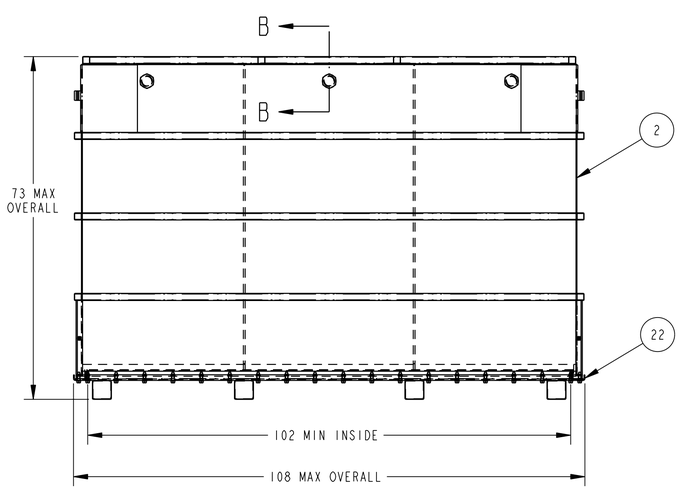

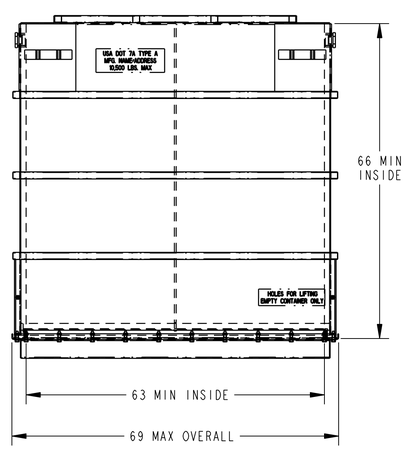

1 STANDARD LARGE BOX 2 ASSEMBLY

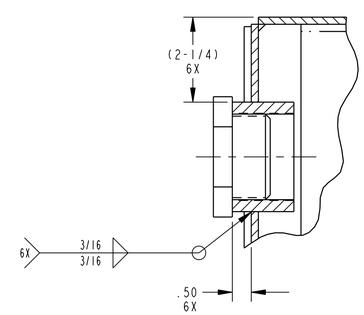

SECTION B-B
SCALE 1:2

LIST OF MATERIAL

TYPE/LEVEL	QTY REQ'D	ITEM NO.	NAME/DESCRIPTION	NOTE NO.	DRAWING NUMBER OR PART ID. NUMBER	MATERIAL SPECIFICATION MATERIAL	MATERIAL SPECIFICATION STD/NUMBER
ASM	1	1	STANDARD LARGE BOX 2 ASSEMBLY		165-F-017-W1	-	-
ASM	1	2	BODY ASSEMBLY		165-F-017-W2	-	-
PRT	1	3	BODY SHELL		165-F-017-W3	-	ASTM A-36
PRT	2	4	BODY WALL		165-F-017-W3	-	ASTM A-36
PRT	2	5	BODY FLANGE, SIDE		165-F-017-W4	-	ASTM A-36
PRT	2	6	BODY FLANGE, END		165-F-017-W4	-	ASTM A-36
PRT	2	7	BODY LABYRINTH, SIDE	9	165-F-017-W4	-	ASTM A-1011, GR 30, MIN
PRT	2	8	BODY LABYRINTH, END	9	165-F-017-W4	-	ASTM A-1011, GR 30, MIN
PRT	6	9	BODY BUMPER, SIDE		165-F-017-W4	-	ASTM A-500 OR A-513
PRT	6	10	BODY BUMPER, END		165-F-017-W4	-	ASTM A-500 OR A-513
PRT	4	11	BODY GUSSET		165-F-017-W5	-	ASTM A-36
PRT	6	12	BODY VERTICAL SPACER		165-F-017-W5	-	ASTM A-36
PRT	6	13	PIPE COUPLING, HALF		165-F-017-W5	CS	ASTM A-865
PRT	4	14	BODY CORNER BRACE		165-F-017-W5	-	ASTM A-36
PRT	4	15	BODY LIFT CLIP		165-F-017-W5	-	ASTM A-36
PRT	4	16	BUMPER, SIDE		165-F-017-W4	-	ASTM A-500 OR A-513
PRT	2	17	BUMPER, END		165-F-017-W4	-	ASTM A-500 OR A-513
PRT	6	18	BUMPER BRACE		165-F-017-W4	-	ASTM A-500 OR A-513
PRT	4	19	BUMPER CAP	9	165-F-017-W5	-	ASTM A-1011, GR 30, MIN
PRT	1	20	FLANGE GASKET W/ PSA BACKING	2	165-F-017-W5	-	SEE NOTE 2
PRT	1	21	LABYRINTH GASKET W/O PSA BACKING	2	165-F-017-W5	-	SEE NOTE 2
ASM	1	22	LID ASSEMBLY		165-F-017-W3	-	-
PRT	1	23	LID PANEL		165-F-017-W3	-	ASTM A-36
PRT	2	24	LID LABYRINTH, SIDE	9	165-F-017-W4	-	ASTM A-1011, GR 30, MIN
PRT	2	25	LID LABYRINTH, END	9	165-F-017-W4	-	ASTM A-1011, GR 30, MIN
PRT	4	26	LID SKID		165-F-017-W4	-	ASTM A-500 OR A-513
PRT	8	27	LID SKID CAP	9	165-F-017-W4	-	ASTM A-1011, GR 30, MIN
PRT	56	28	GASKET COMPRESSION LUG		165-F-017-W5	-	ASTM A-108, GR 1018
PRT	56	29	HEX FLANGE BOLT, SERRATED, 1/2-13UNC-2A X 1.75 LG	7	-	-	SAE GR 5
PRT	56	30	HEX FLANGE NUT, SERRATED, 1/2-13UNC-2B	7	-	-	SAE GR 5
BLK	AR	31	SEALANT		-	RTV SILICONE	-
PRT	6	32	COUPLING PIPE PLUG, ∅2	B	6JL16	CS/SS	ASME/ANSI B1.20.1
PRT	8	33	GUSSET PLUG, ∅5/8, (OPTIONAL)	A	BPF-5/8	POLYETHYLENE	-

NOMINAL TARE WEIGHT : 2700 LBS.
BODY TARE WEIGHT : 2100 LBS.
LID TARE WEIGHT : 600 LBS.
MAXIMUM GROSS WEIGHT : 10500 LBS.

SUPPLIERS

A. CAPLUGS DIVISION CO. OR APPROVED EQUIVALENT

B. GRAINGER OR APPROVED EQUIVALENT

NOTES

CONTINUES ON SHT 2

1. FABRICATE IN ACCORDANCE WITH WASHINGTON TRU-SOLUTIONS SPECIFICATION E-1-463.
2. EPDM, ASTM D-1056, TYPE 2, CLASS A, GRADE 3 WITH F1 AND Z1 (AGED A MINIMUM OF 168 HOURS AT 135°C AND STILL CAPABLE OF BENDING THROUGH 180°).
3. STENCIL THE FOLLOWING IN CONTRASTING COLOR PAINT USING 1 IN. CHARACTERS LOCATED APPROXIMATELY AS SHOWN. ANY OTHER STENCIL REQUIREMENTS SHALL BE PER THE CUSTOMER PURCHASE ORDER.
4. SECURE THE SMALL DIAMETER OF ITEM 28 IN THE LID USING ITEM 31 AS AN ADHESIVE.
5. CREASE BUT DO NOT PERFORATE THE BOTTOM OF EACH BODY BUMPER IN AN AREA THAT WILL NOT HAVE WELD TO ALLOW LIQUID TO DRAIN. CREASE MAY BE ROUND.

REV	ISSUE DESCRIPTION	DFTR DATE	CHKR DATE	COG DATE	DFTG MGR DATE	ECO	PWR

THIS DRAWING CREATED BY ENGINEERING CHANGE ORDER (ECO): 11196 PWR: N/A

DFTR: J.M.NEVAREZ 1/21/05
CHKR: ANTHONY DONNER 1/27/05
COG: J.GOLDEN 1/26/05
CM: PHIL C.GREGORY 1/27/05
QA: B.G.FAULK 1/31/05

U.S. DEPARTMENT OF ENERGY

Washington TRU Solutions LLC
Waste Isolation Pilot Plant Carlsbad, NM

DIM. IN INCHES U.N.O.
[ ] DENOTES mm U.N.O.
UNLESS OTHERWISE SPECIFIED TOLERANCES

2 PL DEC	3 PL DEC	ANGLES	125
±.06	±.030	±1.0°	✓

FRACTIONS: ±1/8

SFTY: N/A
APPD: N/A
APPD: N/A
DM: BOB BEEMAN 1/31/05
DOE: N/A
CAD SOURCE: PRO/ENGINEER

TITLE
STANDARD LARGE BOX 2 ASSEMBLY
(SLB2) BOTTOM LOADING

SIZE D | SYS PT03 | DWG NO 165-F-017-W1 | REV NEW
SCALE: 1:16 | INTERPRET DWG PER ANSI Y14

THIS DRAWING TAKEN FROM: EPD-F-010
VENDOR: ENGINEERED PRODUCTS DEPT. (EPD)

INDEX CODE NUMBER				
SYSTEM	WBE	DWG TYPE	CL	VENDOR
PT03	165	01300	44	240

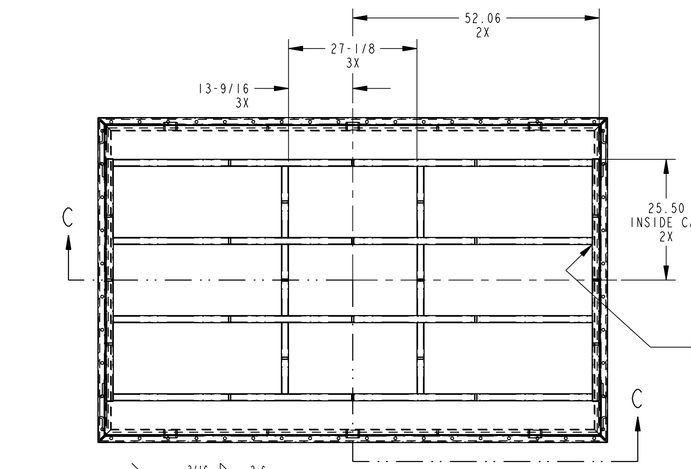

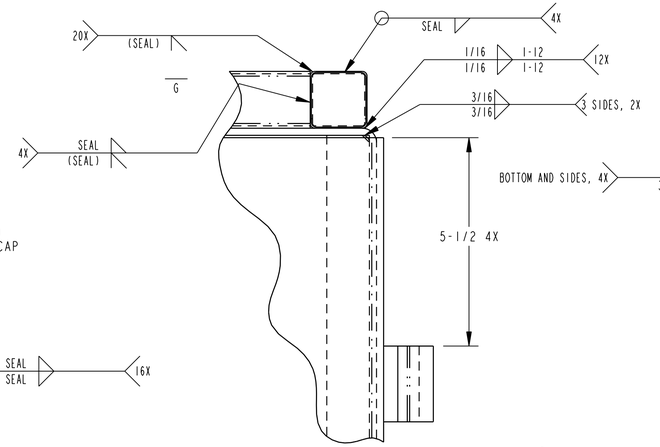

DETAIL 2
SCALE 1:2

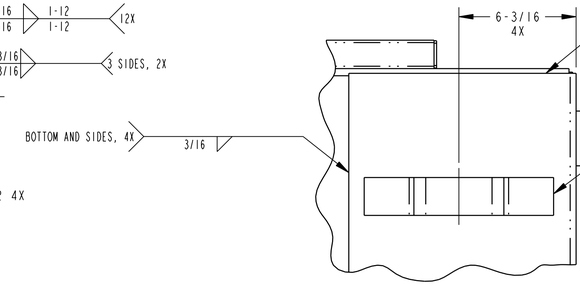

DETAIL 4
SCALE 1:4

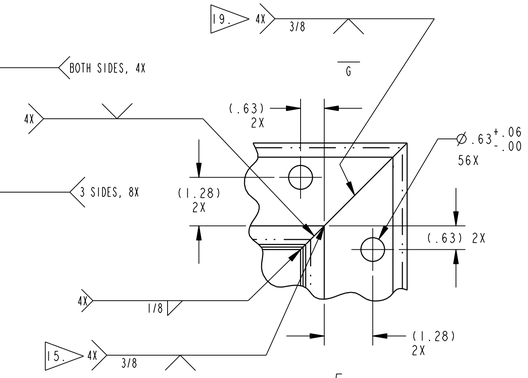

DETAIL 5
SCALE 1:2

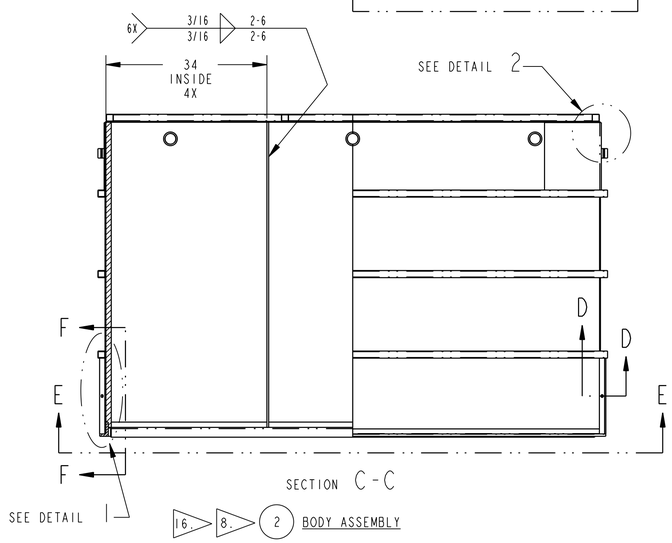

SECTION C-C

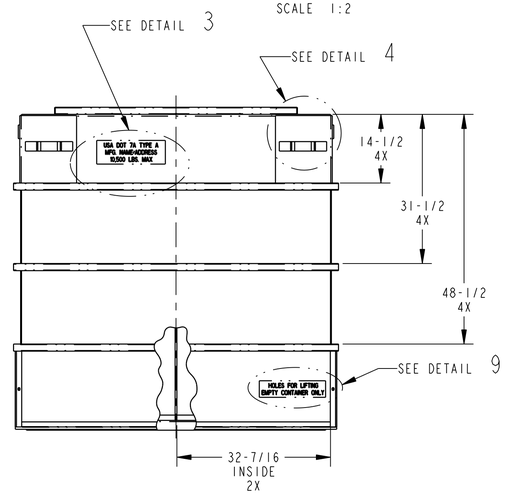

SECTION F-F

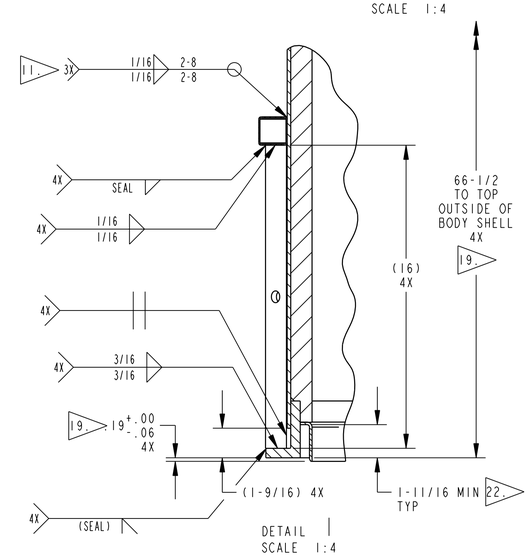

DETAIL 1
SCALE 1:4

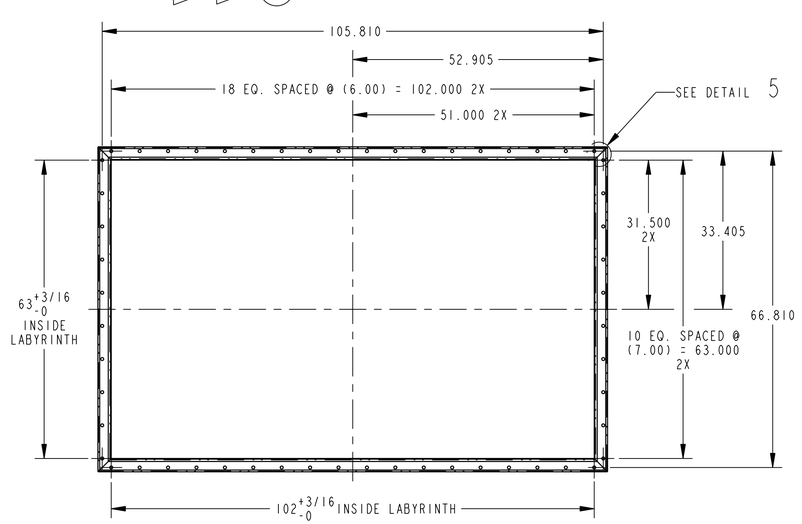

VIEW E-E

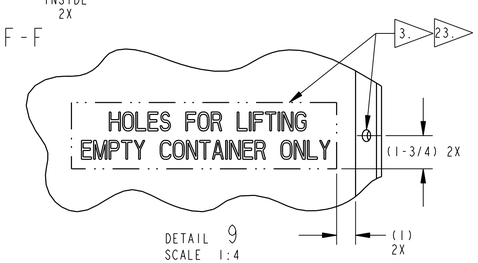

DETAIL 9
SCALE 1:4

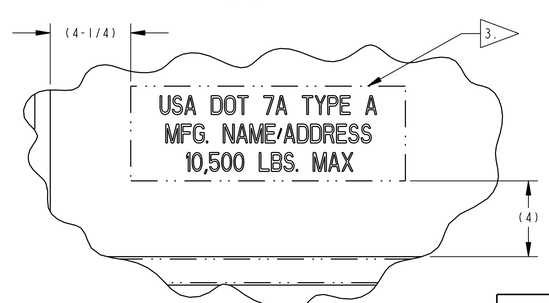

DETAIL 3
SCALE 1:4

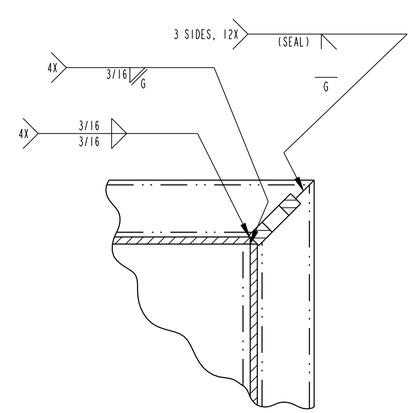

SECTION D-D
SCALE 1:2

NOTES CONTINUES ON SHT 3

6. THE FLARE BEVEL-GROOVE WELD ON SKIDS IS A NON-STRUCTURAL AND NON-CONTAINMENT WELD, THEREFORE, A FLUSH WELD IS NOT REQUIRED AS STATED IN AWS D1.1.

7. ELECTROPLATED PER ASTM B-633, TYPE II, SERVICE CONDITION I.

8. TO REDUCE BOWING OF THE BODY SHELL AND BODY WALL, IT IS SUGGESTED TO WELD BODY BUMPERS (ITEMS 9 & 10) PRIOR TO WELDING BODY FLANGES (ITEM 5 & 6) TO BODY ASSEMBLY.

9. IN LIEU OF SPECIFIED MATERIAL, ASTM A-569 OR ASTM A-570, GRADE 30-33 MAY BE USED.

10. SEE LID ASSEMBLY (ITEM 22) FOR ADDITIONAL DIMENSIONS AND DETAILS.

11. SEAL UNWELDED GAPS ON BOTH SIDES WITH SEALANT (ITEM 31) AS REQUIRED BY COATING METHOD, TYP.

12. ITEMS 20 AND 21 MAY BE SECTIONED BUT MUST BE CONFIGURED TO ELIMINATE DIRECT PATHS THROUGH THE GASKET. IT IS RECOMMENDED THAT ITEM 21 BE ONE PIECE AND INSTALLED WITHOUT STRETCHING.

13. DRILL THRU BEND RADIUS LOCATED APPROXIMATELY AS SHOWN TO ALLOW LIQUID TO DRAIN.

14. COPE TO FIT.

15. GRIND CONCAVE AS NEEDED.

16. FABRICATION OPTION: WHEN APPROVED BY (STR) SITE TECHNICAL REPRESENTATIVE, LID PANEL (ITEM 23) AND BODY FLANGES (ITEMS 5 & 6) HOLE PATTERNS MAY BE MATCH DRILLED AT ASSEMBLY TO ±.06 TOLERANCE IN LIEU OF DETAILED POSITION TOLERANCES, MATCH MARK ONE CORNER OF BODY ASSEMBLY AND LID ASSEMBLY TO AID IN FUTURE INSTALLATION.

17. PIECE PART TOLERANCES ARE REPRESENTATIVE, ADJUST AS/IF NECESSARY TO SATISFY UPPER LEVEL ASSEMBLY DIMENSIONS AND WELDING REQUIREMENTS (SIZE BODY LABYRINTHS TO MEET 102 AND 63 DIMENSIONS).

18. VISUALLY INSPECT ALL WELDS AS STATED IN FABRICATION SPECIFICATION WITH EXCEPTION OF ITEMS 9, 10, 16, 17, 18, 19, 26 & 27.

19. ALIGNMENT OF SEALING SURFACE PARTS SHALL ENSURE LEAK TESTING AND OTHER REQUIREMENTS ARE MET.

20. DIMENSION APPLIES TO TOP SURFACE OF GASKET COMPRESSION LUGS (ITEM 28) TO END OF LID LABYRINTHS (ITEMS 24 & 25) AFTER FINAL COAT OF PAINT.

21. DIE-CUTTER CONFIGURATION REQUIREMENTS FOR FLANGE GASKET (ITEM 20).

REV	ISSUE DESCRIPTION	DFTR DATE	CHKR DATE	COG DATE	DFTG MGR DATE	ECO	PWR

THIS DRAWING CREATED BY ENGINEERING CHANGE ORDER (ECO): 11196 PWR: N/A

DFTR: J.M.NEVAREZ 1/21/05
CHKR: ANTHONY DONNER 1/27/05
COG: J.GOLDEN 1/26/05
CM: PHIL C.GREGORY 1/27/05
QA: B.G.FAULK 1/31/05

U.S. DEPARTMENT OF ENERGY

Washington TRU Solutions LLC

Waste Isolation Pilot Plant — Carlsbad, NM

DIM. IN INCHES U.N.O.
[ ] DENOTES mm U.N.O.
UNLESS OTHERWISE SPECIFIED TOLERANCES

2 PL DEC	3 PL DEC	ANGLES	125
±.06	±.030	±1.0°	

FRACTIONS: ±1/8

SFTY: N/A
APPD: N/A
APPD: N/A
DM: BOB BEEMAN 1/31/05
DOE: N/A
CAD SOURCE: PRO/ENGINEER

TITLE

STANDARD LARGE BOX 2 ASSEMBLY (SLB2) BOTTOM LOADING

SIZE	SYS	DWG NO	REV
D	PT03	165-F-017-W2	NEW

SCALE: 1:16

INTERPRET DWG PER ANSI Y14

THIS DRAWING TAKEN FROM: EPD-F-010
VENDOR: ENGINEERED PRODUCTS DEPT. (EPD)

INDEX CODE NUMBER				
SYSTEM	WBE	DWG TYPE	CL	VENDOR
PT03	165	01300	44	240

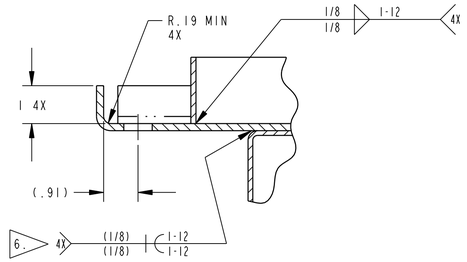

DETAIL 7
SCALE 1:2

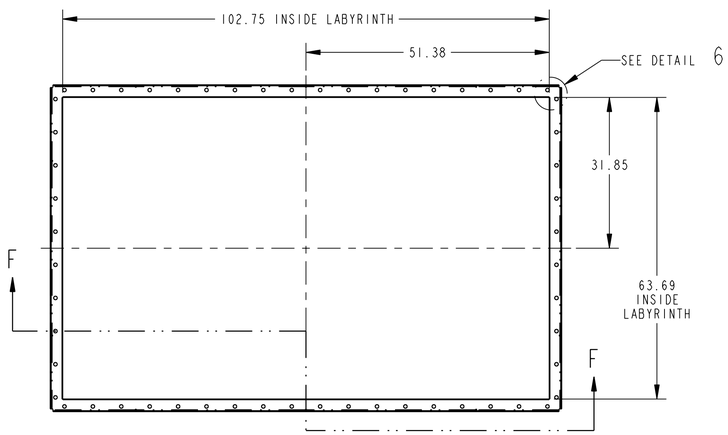

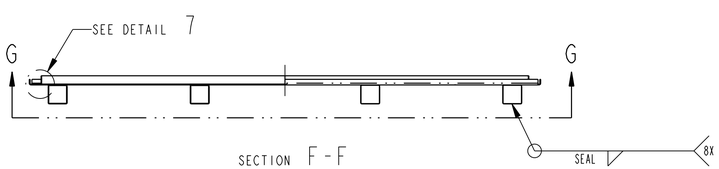

SECTION F-F

16. (22) LID ASSEMBLY

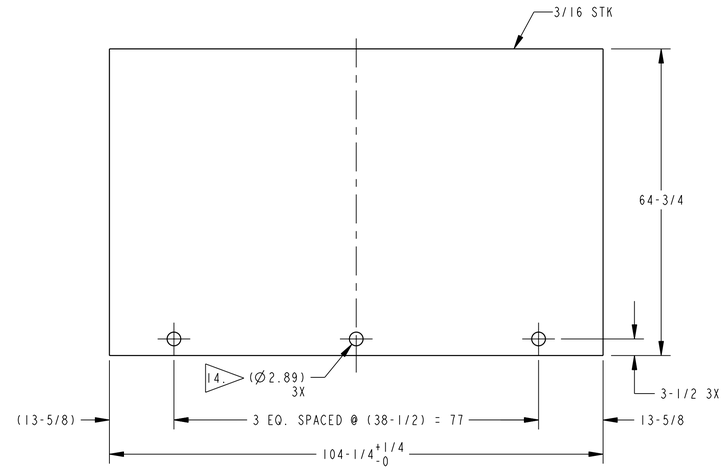

17. (4) BODY WALL

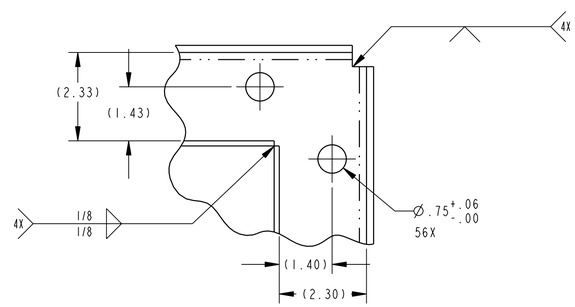

DETAIL 6
SCALE 1:2

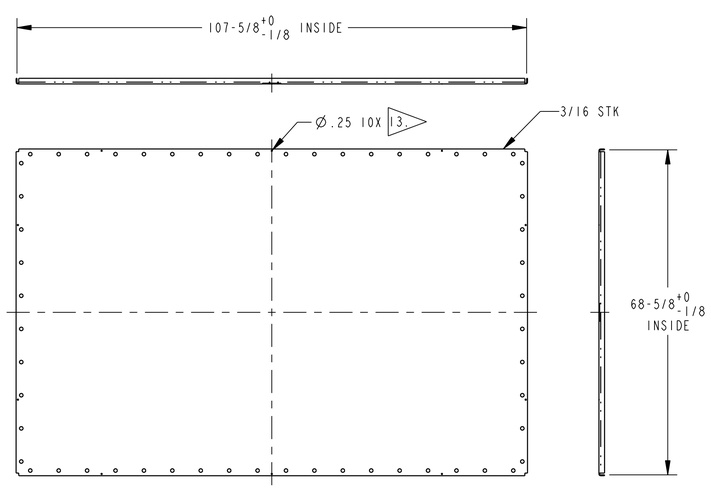

10. (23) LID PANEL

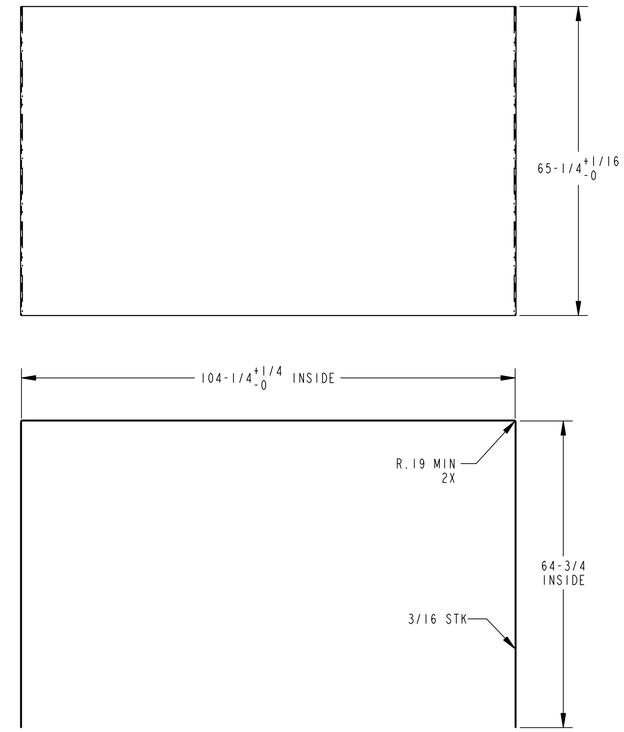

17. (3) BODY SHELL

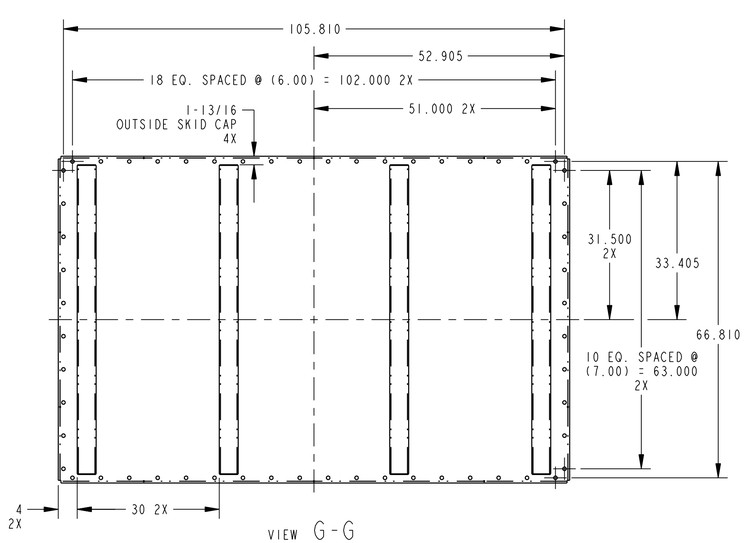

VIEW G-G

NOTES

22. DIMENSION APPLIES TO BOTTOM SURFACE OF BODY LABYRINTHS (ITEMS 7 & 8) TO BOTTOM SURFACE OF BODY FLANGES (ITEMS 5 & 6) AFTER FINAL COAT OF PAINT.

23. BODY GUSSET HOLES ARE OPTIONAL FEATURES. SEE CUSTOMER PURCHASE ORDER FOR APPLICABILITY. IF USED, STENCIL LABEL ONCE ON BOTH SHORT SIDES NEAR HOLES.

24. FABRICATION OPTION: ANGLE 1/8 STK, CONFORMED TO ASTM A-36, MAY BE CONSTRUCTED AND UTILIZED IN LIEU OF BODY LABYRINTHS (ITEMS 7 & 8).

25. BOLT TORQUE: START FROM MIDDLE OF LID, TIGHTEN TO 30 FT. LB. AND WORK OUTWARD. TIGHTEN TO 55^{+10}_{-0} FT. LB. IN SAME SEQUENCE.

26. FILTER TORQUE: 10^{+5}_{-0} FT. LB. APPROVED FILTER (SUPPLIED BY OTHERS) IS NUCFIL 016SS HP OR WTS ENGINEERING APPROVED EQUIVALENT.

REV	ISSUE DESCRIPTION	DFTR DATE	CHKR DATE	COG DATE	DFTG MGR DATE	ECO	PWR

THIS DRAWING CREATED BY ENGINEERING CHANGE ORDER (ECO): 11196 PWR: N/A

DFTR: J.M.NEVAREZ 1/21/05
CHKR: ANTHONY DONNER 1/27/05
COG: J.GOLDEN 1/26/05
CM: PHIL C.GREGORY 1/27/05
QA: B.G.FAULK 1/31/05

U.S. DEPARTMENT OF ENERGY

Washington TRU Solutions LLC
Waste Isolation Pilot Plant Carlsbad, NM

DIM. IN INCHES U.N.O.	SFTY: N/A	
[ ] DENOTES mm U.N.O.	APPD: N/A	
UNLESS OTHERWISE SPECIFIED TOLERANCES	APPD: N/A	
2 PL DEC ±.06 / 3 PL DEC ±.030 / ANGLES ±1.0° / 125	DM: BOB BEEMAN 1/31/05	
FRACTIONS: ±1/8	DOE: N/A	
	CAD SOURCE PRO/ENGINEER	

TITLE

STANDARD LARGE BOX 2 ASSEMBLY (SLB2) BOTTOM LOADING

SIZE	SYS	DWG NO	REV
D	PT03	165-F-017-W3	NEW

SCALE: 1:16 INTERPRET DWG PER ANSI Y14

THIS DRAWING TAKEN FROM: EPD-F-010
VENDOR: ENGINEERED PRODUCTS DEPT. (EPD)

INDEX CODE NUMBER				
SYSTEM	WBE	DWG TYPE	CL	VENDOR
PT03	165	01300	44	240

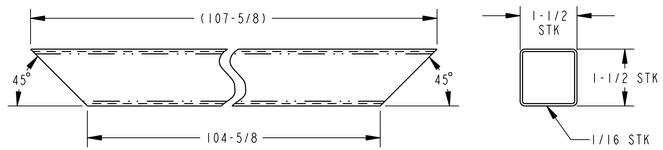

17. 9 BODY BUMPER, SIDE

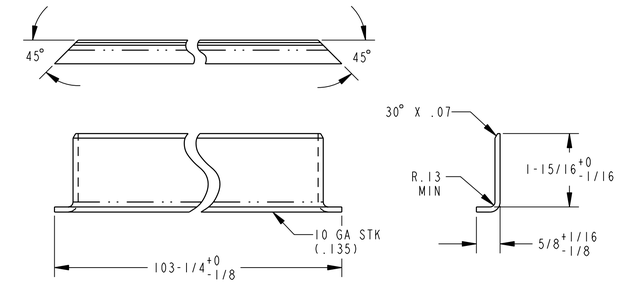

17. 24. 7 BODY LABYRINTH, SIDE

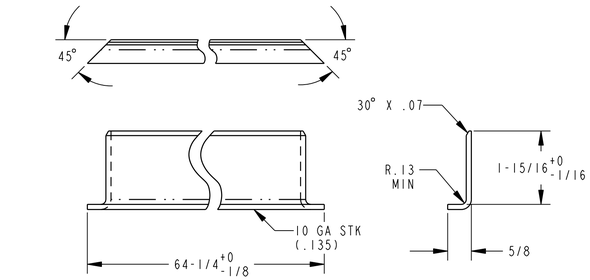

17. 24. 8 BODY LABYRINTH, END

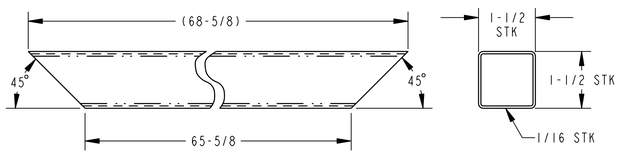

17. 10 BODY BUMPER, END

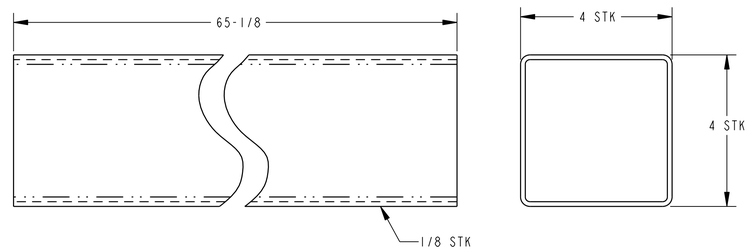

26 LID SKID

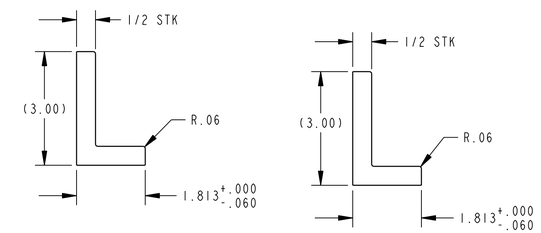

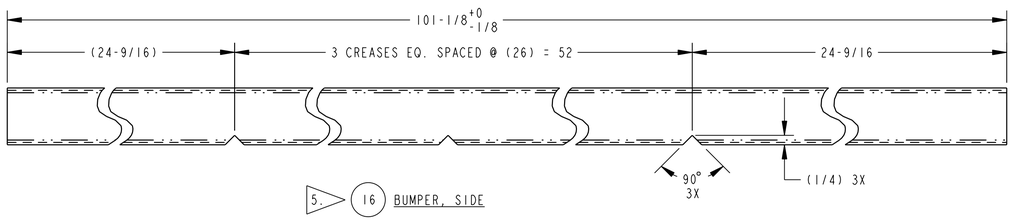

5. 16 BUMPER, SIDE

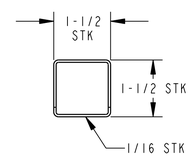

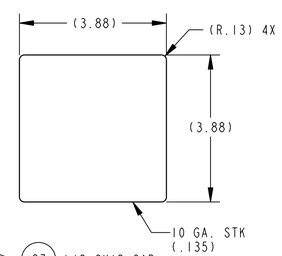

14. 27 LID SKID CAP

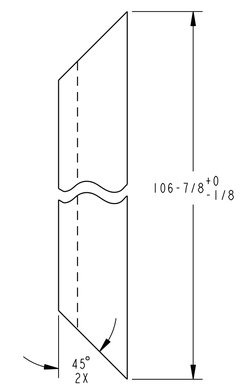

17. 5 BODY FLANGE, SIDE

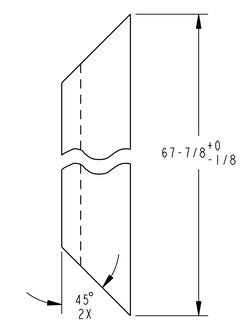

17. 6 BODY FLANGE, END

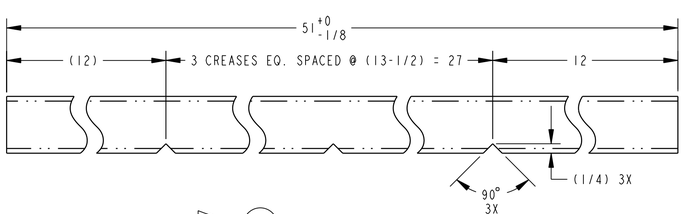

5. 17 BUMPER, END

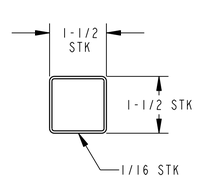

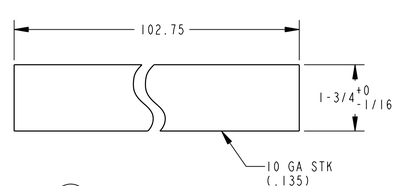

24 LID LABYRINTH, SIDE

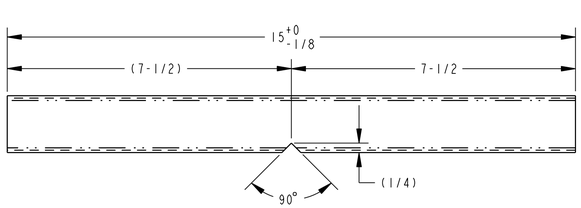

5. 18 BUMPER BRACE

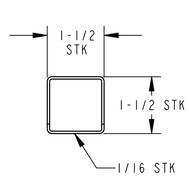

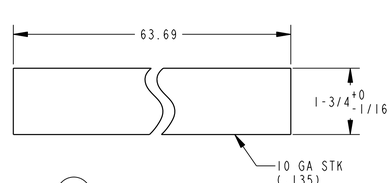

25 LID LABYRINTH, END

INDEX CODE NUMBER				
SYSTEM	WBE	DWG TYPE	CL	VENDOR
PT03	165	01300	44	240

REV	ISSUE DESCRIPTION	DFTR DATE	CHKR DATE	COG DATE	DFTG MGR DATE	ECO	PWR

THIS DRAWING CREATED BY ENGINEERING CHANGE ORDER (ECO): 11196 PWR: N/A

DFTR: J.M.NEVAREZ 1/21/05
CHKR: ANTHONY DONNER 1/27/05
COG: J.GOLDEN 1/26/05
CM: PHIL C.GREGORY 1/27/05
QA: B.G.FAULK 1/31/05

U.S. DEPARTMENT OF ENERGY

Washington TRU Solutions LLC

Waste Isolation Pilot Plant Carlsbad, NM

DIM. IN INCHES U.N.O.
[ ] DENOTES mm U.N.O.
UNLESS OTHERWISE SPECIFIED TOLERANCES

2 PL DEC	3 PL DEC	ANGLES	125
±.06	±.030	±1.0°	

FRACTIONS: ±1/8

SFTY: N/A
APPD: N/A
APPD: N/A
DM: BOB BEEMAN 1/31/05
DOE: N/A
CAD SOURCE PRO/ENGINEER

TITLE

STANDARD LARGE BOX 2 ASSEMBLY (SLB2) BOTTOM LOADING

SIZE	SYS	DWG NO	REV
D	PT03	165-F-017-W4	NEW

SCALE: 1:2 INTERPRET DWG PER ANSI Y14

THIS DRAWING TAKEN FROM: EPD-F-010
VENDOR: ENGINEERED PRODUCTS DEPT. (EPD)

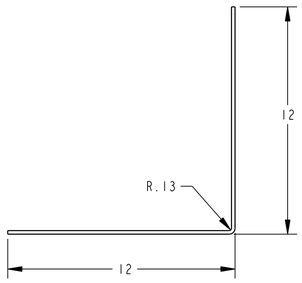

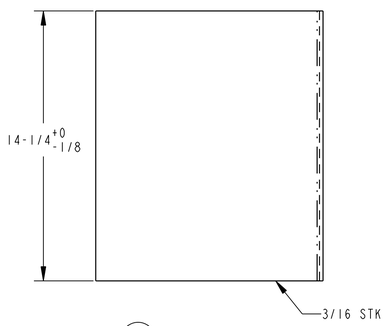

14 BODY CORNER BRACE
SCALE 1:4

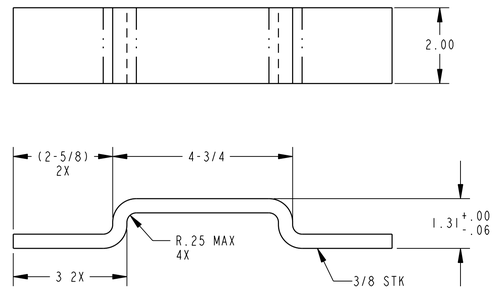

15 BODY LIFT CLIP
SCALE 1:2

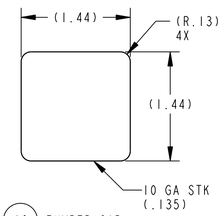

14. 19 BUMPER CAP
SCALE 1:1

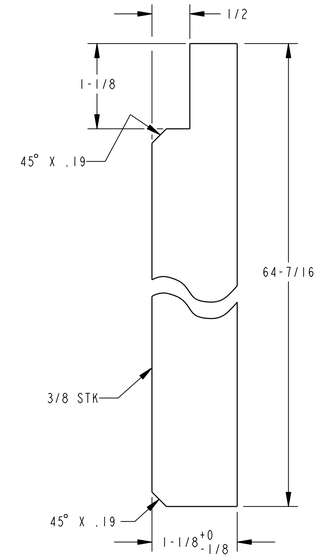

17. 12 BODY VERTICAL SPACER
SCALE 1:1

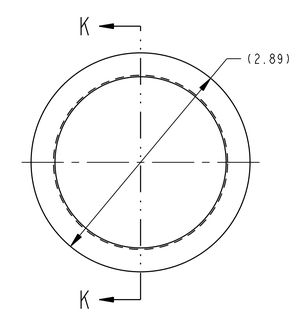

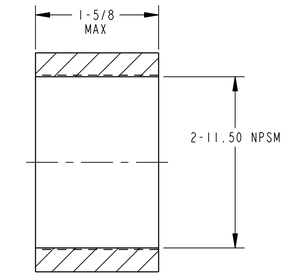

SECTION K-K

13 PIPE COUPLING, HALF
SCALE 1:1

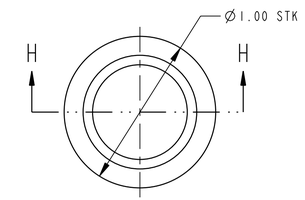

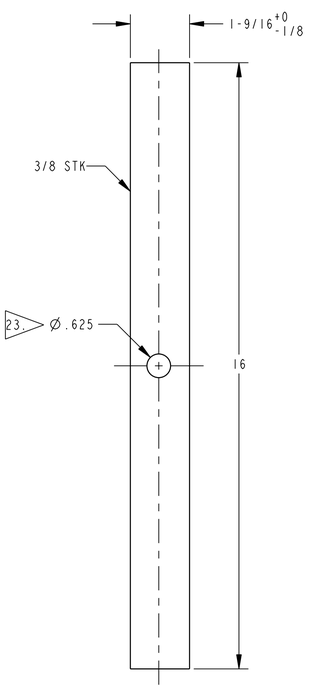

17. 11 BODY GUSSET
SCALE 1:2

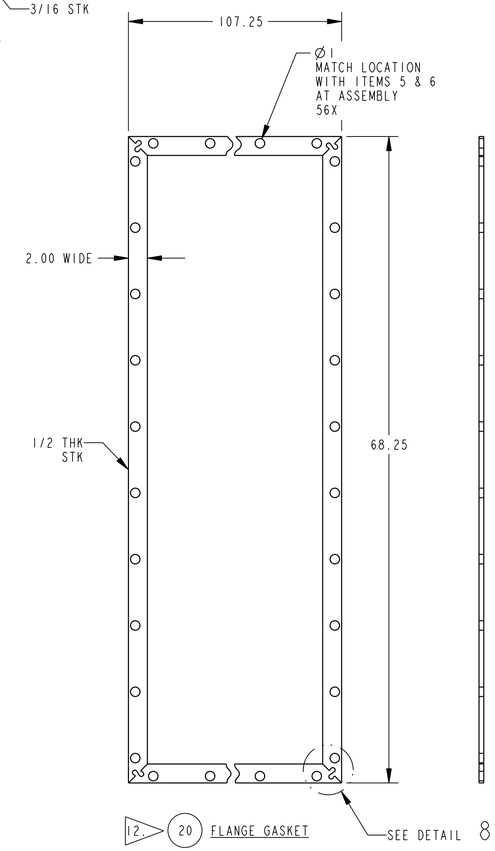

12. 20 FLANGE GASKET

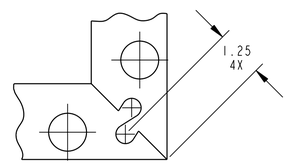

DETAIL 8
SCALE 1:2
TYP

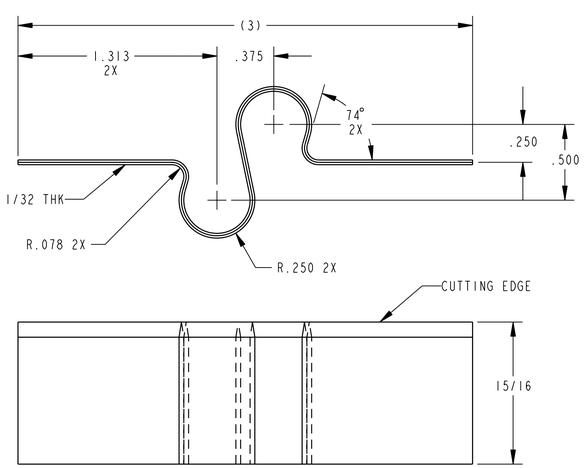

21. GASKET INTERLOCK BLADE
SCALE 2:1

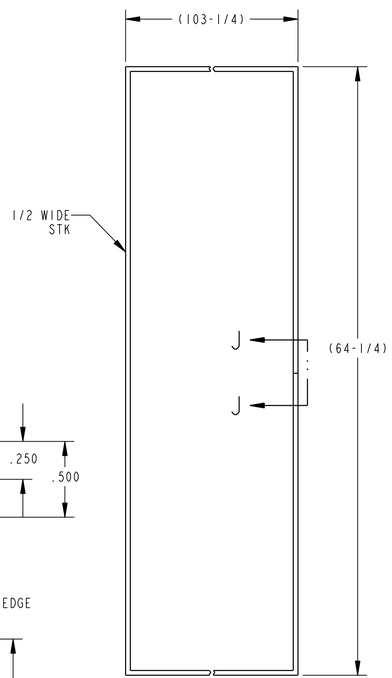

12. 21 LABYRINTH GASKET

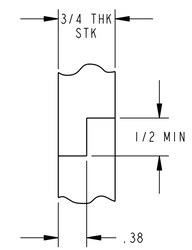

SECTION J-J
SCALE 1:1

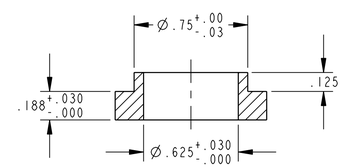

SECTION H-H
SCALE 2:1

28 GASKET COMPRESSION LUG

INDEX CODE NUMBER				
SYSTEM	WBE	DWG TYPE	CL	VENDOR
PT03	165	01300	44	240

REV	ISSUE DESCRIPTION	DFTR DATE	CHKR DATE	COG DATE	DFTG MGR DATE	ECO	PWR

THIS DRAWING CREATED BY ENGINEERING CHANGE ORDER (ECO): 11196 PWR: N/A

DFTR: J.M.NEVAREZ 1/21/05
CHKR: ANTHONY DONNER 1/27/05
COG: J.GOLDEN 1/26/05
CM: PHIL C.GREGORY 1/27/05
QA: B.G.FAULK 1/31/05

U.S. DEPARTMENT OF ENERGY

Washington TRU Solutions LLC

Waste Isolation Pilot Plant Carlsbad, NM

DIM. IN INCHES U.N.O.
[ ] DENOTES mm U.N.O.
UNLESS OTHERWISE SPECIFIED TOLERANCES

2 PL DEC	3 PL DEC	ANGLES	125
±.06	±.030	±1.0°	✓

FRACTIONS: ±1/8

SFTY: N/A
APPD: N/A
APPD: N/A
DM: BOB BEEMAN 1/31/05
DOE: N/A
CAD SOURCE PRO/ENGINEER

TITLE
STANDARD LARGE BOX 2 ASSEMBLY (SLB2) BOTTOM LOADING

SIZE D | SYS PT03 | DWG NO 165-F-017-W5 | REV NEW
SCALE: 1:8
INTERPRET DWG PER ANSI Y14

THIS DRAWING TAKEN FROM: EPD-F-010
VENDOR: ENGINEERED PRODUCTS DEPT. (EPD)