CH Packaging Operations for High-Wattage Waste

Revision 7

January 2006

This document supersedes Revision 6 of DOE/WIPP 02-3220.

CH Packaging Operations for High-Wattage Waste

Russell McCallister 1/3/06

for Kerry Watson, DOE
Director, Office of Characterization and Transportation

Date

Processing and final preparation of this paper was performed by Washington TRU Solutions LLC, the management and operating (M&O) contractor for the Waste Isolation Pilot Plant under U.S. Department of Energy contract number DE-AC04-01AL66444.

This document has been submitted as required to:

Office of Scientific and Technical Information
P.O. Box 62
Oak Ridge, TN 37831
(615) 576-8401

Additional Information about this document may be obtained by calling (800) 336-9477.
Copies may be obtained by contacting the National Technical Information Service,
U.S. Department of Commerce, 5285 Port Royal Road, Springfield, VA 22101.

RECORD OF REVISION

Revision	Reason for Revision/Change
0	New CH Packaging Operations Manual for shipping LANL high-wattage waste. This document must be used in conjunction with DOE/WIPP 02-3183, *CH Packaging Program Guidance*, and DOE/WIPP 02-3185, *CH Packaging Maintenance Manual*.
1	Changes in Sections 2.17, 2.18, and 2.20, and Figure 2.1, to address results of validation process at LANL. This document must be used in conjunction with DOE/WIPP 02-3183, *CH Packaging Program Guidance*, and DOE/WIPP 02-3185, *CH Packaging Maintenance Manual*.
2	Update Figure 2.1, page 66, change contractor name from Westinghouse to Washington, and move OSTI notification to 2nd page.
3	Adds Steps 2.16.18 and 2.16.19 to text, modifies mTorr limits in Step 2.17.20, and adds sign-off Steps 2.16.18 and 2.16.19 to Attachment 2.
4	Incorporate revised table showing wattage limits for waste code LA154 subtypes.
5	Incorporate changes from the Safety Analysis Report for the TRUPACT-II Shipping Package, Rev. 20, and DOE/WIPP 02-3184, Rev. 2. The major changes are highlighted below: - Page numbering changed. - Figure 1.3 SWB Payload Assembly changed - Added Figure 1.4 TDOP Payload Assembly - Added references in Subsection 1.1.2 for CH-TRAMPAC, WP 08-PT.01 and WP 08-PT.02. - Added a prerequisite action to Subsection 1.4.4 to verify payload size - Added a NOTE to Section 1.3 about guidance for SWB activities. - Added a note to Section 1.3 showing maximum assembly height for SWB payloads. - Added (± 2 degrees) to CAUTION in Subsection 1.3.3. - Added a NOTE to Section 1.4 regarding guidance for TDOP operations. - Added a CAUTION to Section 2.0. - Added three bullets to Subsection 2.1.4 Precautions and Limitations. - Added a NOTE in Subsection 2.3.2 for trailer tie-down guidance. - Added a NOTE in Subsection 2.4.1 for OCA seal test port plug access. - Added a CAUTION in Subsection 2.4.4 for ACGLF counterweight position. - Added a NOTE in Section 2.8 for a definition of clean O-rings. - Added two bullets in Subsection 2.8.2. - Added Subsection 2.8.4 to remove ICV Wiper O-ring for cleaning. - Added two bullets to Subsection 2.9.3. - Added wording in Section 2.10 to inspect for conditions hat could impair the function of the part. - Added Subsection 2.16.3 to verify proper assembly of payload. - Added NOTE in Subsection 2.16.8 for payload assembly weight. - Added wording to Subsection 2.16.20 for High-Wattage Waste limits.

- Added a sign-off for Subsection 2.16.20 2.19.2, 2.19.13, 2.19.15, 2.20.16, and 2.20.17.
- Added wording to Subsection 2.17.18 to verify pressure is less than or equal to 2 Torr.
- Added Subsection 2.18.15 to perform ICV preshipment leakage rate.
- Added three bullets to 2.24.3.
- Added a WARNING to Subsection 2.24.3 no to remove ICV vent port plug if torque is relieved.
- Added a NOTE to Subsection 2.24.3.
- Added a HOLD POINT to Subsection 2.25.5 with a sign-off.
- Added two NOTES under Subsection 2.33.5.
- Added two bullets to Subsection 2.34.13.
- Added a NOTE to contact Packaging Maintenance Engineer in Section 3.0.
- SECTION 4.0 PRESHIPMENT LEAKAGE RATE TESTING changed to match DOE/WIPP 02-3184.
- Attachments 1 through 10 were changed to match changes in the document.

6 Editorial revision to correct Step 4.3.22 to read RETURN TO Step 2.18.16.

7 Major changes are highlighted below:

- Incorporate changes from DOE/WIPP 02-3184, Rev. 3.
- Provided means to document evacuation period on Attachment 2.
- Provided means to document stabilization period on Attachment 2.
- Corrected symbol in Step 2.17.26.
- Incorporate requirements for SQ-154 high-wattage waste shipments.
- Clarified the use of nitrogen or argon for inert gas backfill.
- Added a step and sign-off at Step 2.19.19 for supervisor to verify WWIS approval and final submittal.
- Corrected packaging component nomenclature.

M&O CONTRACTOR TECHNICAL REVIEW ORGANIZATIONS
WASHINGTON TRU SOLUTIONS
CBFO REVIEW ORGANIZATIONS
OFFICE OF CHARACTERIZATION AND TRANSPORTATION
QUALITY ASSURANCE
EDITORIAL

TABLE OF CONTENTS

1.0 PAYLOAD PREPARATION . . . 9
- 1.1 Basic Information . . . 9
- 1.2 Preparing 55-Gallon Drum Payload Assembly . . . 10
- 1.3 Preparing SWB Payload Assembly . . . 13
- 1.4 Preparing TDOP Payload Assembly . . . 14

2.0 NORMAL OPERATING INSTRUCTIONS . . . 19
- 2.1 Basic Information . . . 19
- 2.2 Packaging (Empty) Receipt . . . 22
- 2.3 Releasing Tie-Downs and Removal of Packaging from Trailer . . . 23
- 2.4 OCA Lid Removal . . . 24
- 2.5 ICV Lid Removal . . . 25
- 2.6 Preloading/Shipping Operational Checks and Examinations . . . 27
- 2.7 OCA Lid Inspection and Cleaning . . . 27
- 2.8 ICV Lid Inspection and Cleaning . . . 28
- 2.9 OCA Body Inspection and Cleaning . . . 29
- 2.10 OCA Components Inspection and Cleaning . . . 30
- 2.11 ICV Body Inspection and Cleaning . . . 31
- 2.12 ICV Components Inspection and Cleaning . . . 33
- 2.13 ICV Cavity Inspection . . . 34
- 2.14 Preloading Operations . . . 34
- 2.15 Packaging Receipt and Inspection Data Sheet Validation . . . 34
- 2.16 Loading Payload Assembly . . . 34
- 2.17 ICV Lid Installation . . . 37
- 2.18 Inert Gas Backfill (Nitrogen or Argon) . . . 39
- 2.19 OCA Lid Installation . . . 41
- 2.20 Installation of Package onto Transport Trailer . . . 42
- 2.21 Package (Loaded) Receipt . . . 45
- 2.22 Releasing Tie-Downs and Removal of Package from Trailer . . . 46
- 2.23 OCA Lid Removal . . . 47
- 2.24 ICV Lid Removal . . . 49
- 2.25 Unloading Payload Assembly . . . 51
- 2.26 Packaging Operational Checks and Examinations . . . 52
- 2.27 OCA Lid Inspection and Cleaning . . . 52
- 2.28 ICV Lid Inspection and Cleaning . . . 54
- 2.29 OCA Body Inspection and Cleaning . . . 55
- 2.30 OCA Components Inspection and Cleaning . . . 56
- 2.31 ICV Body Inspection and Cleaning . . . 57
- 2.32 ICV Components Inspection and Cleaning . . . 58
- 2.33 ICV Cavity Inspection . . . 59
- 2.34 ICV Lid Installation . . . 60
- 2.35 OCA Lid Installation . . . 61
- 2.36 Installation of Packaging onto Transport Trailer . . . 63

3.0 ABNORMAL OPERATIONS . . . 67
- 3.1 Empty ICV Assembly Removal . . . 67
- 3.2 Using Heat Guns to Remove Stuck Lids . . . 68
- 3.3 Pressurizing with Nitrogen or Compressed Air to Remove Stuck Lids . 69
- 3.4 Venting . . . 72

4.0 PRESHIPMENT LEAKAGE RATE TESTING 74
4.1 Basic Information 74
4.2 ICV Upper Main O-Ring Seal 76
4.3 ICV Outer Vent Port Plug Seal O-Ring 80
4.4 OCV Upper Main O-Ring Seal 83
4.5 OCV Vent Port Plug Seal O-Ring 87

Attachment 1 - High-Wattage CH Packaging Receipt and Inspection Data Sheet . . 95

Attachment 2 - High-Wattage CH Packaging Loading Data Sheet 96

Attachment 3 - High-Wattage Loaded CH Package Trailer Data Sheet 98

Attachment 4 - High-Wattage Loaded Package Receipt and Processing Data Sheet 99

Attachment 5 - High-Wattage Empty Packaging Shipment Data Sheet 100

Attachment 6 - High-Wattage Trailer Data Sheet 102

Attachment 7 - ICV Preshipment Leakage-Rate Test Data Sheet 103

Attachment 8 - OCV Preshipment Leakage-Rate Test Data Sheet 106

Attachment 9 - Time and Date Data Sheet for Shipment of High-Wattage Waste . 109

Attachment 10 - Time and Date Data Sheet for Receipt of High-Wattage Waste . . 110

LIST OF FIGURES

Figure 1.1 - 55-Gallon Drum Placement 15
Figure 1.2 - 55-Gallon Drum Payload Assembly 16
Figure 1.3 - SWB Payload Assembly 17
Figure 1.4 - TDOP Payload Assembly 18
Figure 2.1 - Evacuation/Inert Gas Backfill 66
Figure 3.1 - Flow Diagram for Nitrogen Bottle/Compressed Air ICV/OCA Lid Pressurization 73
Figure 4.1 - ICV Main O-Ring Seal Test 91
Figure 4.2 - ICV Outer Vent Port Plug Seal O-Ring Test 92
Figure 4.3 - OCV Main O-Ring Seal Test 93
Figure 4.4 - OCV Vent Port Plug Seal O-Ring Test 94

1.0 PAYLOAD PREPARATION

CAUTION

If the payload pallet will be placed on a square pallet for subsequent movement by forklift, care must be taken to ensure all three pockets used for lifting with the Adjustable Center of Gravity Lift Fixture (ACGLF) rest on a flat surface. Failure to ensure this may result in pallet damage due to the weight of the ACGLF driving the pallet lift point through the pallet.

NOTE

This section provides the user with instructions for assembling a payload. All the steps in Subsections 1.2, Preparing 55-Gallon Drum Payload Assembly; 1.3, Preparing SWB Payload Assembly; and 1.4, Preparing TDOP Payload Assembly, must be completed, but may be performed in any order as long as radiological control steps are not bypassed.

1.1 Basic Information

1.1.1 Introduction - This procedure provides instructions for assembling the following contact-handled (CH) packaging payload:

- Drum payload assembly
- Standard Waste Box (SWB) assembly
- Ten-Drum Overpack (TDOP)

1.1.2 References

BASELINE DOCUMENTS

- U.S. Nuclear Regulatory Commission (NRC)-Docket-71-9218, *Safety Analysis Report for the TRUPACT-II Shipping Package*
- NRC-Docket-71-9218, *TRUPACT-II Certificate of Compliance*, No. 9218
- *Contact-Handled Transuranic Waste Authorized Methods for Payload Control (CH-TRAMPAC)*, U.S. Department of Energy
- CH-TRU Payload Appendices
- WP 08-PT.01, Standard Waste Box Handling and Operation Manual

- WP 08-PT.02, Ten-Drum Overpack Handling and Operation Manual

1.1.3 Equipment

- SWB ratchet straps or turnbuckles
- Drum payload pallet
- Guide tubes
- Stretch wrap
- Slip sheets
- Reinforcement plates

1.1.4 Prerequisite Actions

- Each waste container and payload assembly shall be verified to meet CH TRAMPAC requirements before shipment.

- Verify each payload container is less than the limits specified in Table 3.2-1 of the CH TRAMPAC (total external dose rate).

1.2 Preparing 55-Gallon Drum Payload Assembly

1.2.1 Verify cotter pins are installed in lift pin assemblies on new style pallets.

1.2.2 Place clean pallet, right side up on floor or stretch wrap machine for use as the bottom support of the drum payload assembly.

1.2.3 Place slip sheet on top of pallet.

1.2.4 Verify guide tube holes on slip sheet and pallet are aligned.

NOTE

The diameter of all drums, including the locking ring, must be less than or equal to 24 inches (in.). This dimension should not include the locking bolt. Tapping the locking ring with a hammer while torquing the lock ring nut may assist in ensuring the drum is tightly closed. The diameter of each layer of drums should not exceed 72 in. The adhesive-backed bumper pads are excluded from the 24-in. and 72-in. diameter limits.

NOTE

If shipping less than 14 loaded drums in a TRUPACT-II, empty dunnage drums must be used to form the payload while adhering to weight management practices (see Figure 1.1, 55-Gallon Drum Placement). Dunnage drums shall have open vent ports (i.e., not filtered or plugged).

1.2.5 Verify at least one approved filter is installed in each loaded drum in accordance with Section 2.5 of the CH TRAMPAC.

1.2.6 Verify all waste drums are properly labeled and drums are approved for the shipment being assembled.

NOTE

In Step 1.2.7, at least one container ID label on each drum (except the middle) must be visible when drums are assembled into a payload assembly.

NOTE

Drums in an assembly should be approximately the same height such that a flat stacking surface is achieved. That is, the maximum difference between the shortest and tallest drums in an assembly shall not exceed 1/2 in., with the exception of the center drum in a seven-pack assembly, which may be up to one inch shorter but no taller than the tallest drum in the seven-pack assembly.

1.2.7 Place seven drums on slip sheet using weight distribution shown in Figure 1.1.

1.2.8 Verify locking bolt on each drum is positioned between drum gaps that do not contain guide tubes.

1.2.9 Verify heaviest seven-pack is on bottom of drum payload assembly for TRUPACT-II (see Figure 1.1).

1.2.10 Stretch wrap upper portion of drums with nine wraps so wraps extend down the sides of the drums a maximum of 22 in. with **NO** overlap on top of drums.

NOTE

The reinforcing plate should rest flat on top of the drums. Tape may be used to secure the reinforcing plate to the drums prior to applying stretch wrap.

1.2.11 Place reinforcing plate on top.

1.2.12 Verify guide tube holes are aligned with bottom slip sheet/pallet holes by inserting and removing guide tubes and adjusting assembly, as required.

1.2.13 Apply nine additional wraps of stretch wrap so there is overlap on top of drums (see Figure 1.2, 55-Gallon Drum Payload Assembly).

1.2.14 Place slip sheet on top of bottom layer of drums (on top of reinforcing plate) **AND** align white stripe with the one on lower assembly.

1.2.15 Verify guide tube holes are aligned with bottom slip sheet/pallet holes (if desired, guide tubes may be inserted to help maintain pallet alignment).

NOTE

In Step 1.2.16, at least one container ID label on each drum (except the middle) must be visible when drums are assembled into a payload assembly.

NOTE

Drums in an assembly should be approximately the same height such that a flat stacking surface is achieved. That is, the maximum difference between the shortest and tallest drums in an assembly shall not exceed 1/2 in., with the exception of the center drum in a seven-pack assembly, which may be up to one inch shorter but no taller than the tallest drum in the seven-pack assembly.

1.2.16 Place seven drums on slip sheet using weight distribution shown in Figure 1.1.

1.2.17 Verify locking bolt (on each drum) is positioned between drum gaps which will not contain guide tubes.

1.2.18 Install adhesive backed bumper pads on top chine of the six exposed drums.

1.2.19 Stretch wrap upper portion of drums with nine wraps so wraps extend down the sides of drums a maximum of 22 in. with **NO** overlap on top of drums.

NOTE

The reinforcing plate should rest flat on top of the drums. Tape may be used to secure the reinforcing plate to the drums prior to applying stretch wrap.

1.2.20 Place reinforcing plate on top.

1.2.21 Verify guide tube holes are aligned with bottom slip sheet/pallet holes by inserting and removing guide tubes and adjusting assembly, as required.

1.2.22 Apply nine additional wraps of stretch wrap so there is overlap on top of drums.

1.2.23 Verify at least one container ID label on each drum (except the middle) is visible when drums are assembled into payload assembly.

1.2.24 If not already installed, insert guide tube(s) into drum payload assembly adjusting upper assembly, as required.

1.2.25 If beta-gamma, alpha, and neutron surveys are required, survey using site-specific procedures.

1.3 Preparing SWB Payload Assembly

NOTE

Additional guidance regarding SWB activities, such as loading, handling, filter installation, maintenance, inspection, and repair, is provided in WP 08-PT.01. This document is available on the Internet at http://www.wipp.ws/library/caolib.htm#containers.

NOTE

The maximum SWB payload assembly height is 74-5/8 in.

1.3.1 Verify approved filters are installed in each SWB and the remaining ports are plugged (if not filtered), in accordance with Section 2.5 of the CH TRAMPAC.

NOTE

If shipping only one loaded SWB in a TRUPACT-II, a second empty dunnage SWB must be used in the top position to form the payload. To allow for pressure changes, dunnage SWBs shall have open vent ports (i.e., not filtered or plugged).

1.3.2 Verify SWBs are properly labeled and SWBs are approved for the shipment being assembled.

NOTE

An SWB forklift adapter may be used in lieu of a crane/ACGLF.

1.3.3 Place heaviest SWB on floor.

CAUTION

Operator shall verify two ACGLF counterweights are at 180 degrees and 000 degrees (± 2 degrees) **BEFORE** lifting ACGLF or lid.

1.3.4 Place second SWB on top of first and align the edges.

1.3.5 Attach SWB turnbuckles or adjustable slings (in three places) to top and bottom SWBs as follows:

- One on each outer lift clip on one side
- One on the middle clip on the opposite side (see Figure 1.3, SWB Payload Assembly)

1.3.6 Install SWB bumper pads (On the top SWB, the bumpers should be placed at the end of the top ribs only. On the bottom SWB, the bumpers should be placed at the end of the bottom ribs only).

1.3.7 If beta-gamma, alpha, and neutron surveys are required, survey using site-specific procedures.

1.4 Preparing TDOP Payload Assembly (TRUPACT-II only)

NOTE

Additional guidance regarding TDOP operations, such as handling, loading, lifting, inspection, maintenance, and repair, is provided in WP 08-PT.02. This document is available on the Internet at http://www.wipp.ws/library/caolib.htm#containers.

1.4.1 Verify approved filters are installed and the remaining ports are plugged (if not filtered), in accordance with Section 2.5 of the CH TRAMPAC.

1.4.2 Verify the TDOP is properly labeled and approved for the shipment being assembled.

1.4.3 Install bumper pads on the top and bottom rib of TDOP (four pads on each rib) (see Figure 1.4 for example).

1.4.4 If beta-gamma, alpha, and neutron surveys are required, survey using site-specific procedures.

Figure 1.1 - 55-Gallon Drum Placement

ASSEMBLY OF FIRST LAYER OF SEVEN DRUMS:

POSITION	WEIGHT
1	HEAVIEST DRUM
2	NEXT HEAVIEST DRUM
3	THIRD HEAVIEST DRUM
4	FOURTH HEAVIEST DRUM
5	FIFTH HEAVIEST DRUM
6	SIXTH HEAVIEST DRUM
7	LAST DRUM

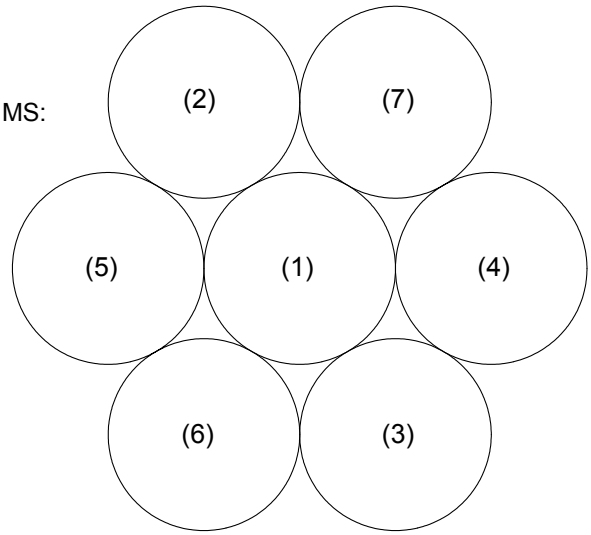

ASSEMBLY OF SECOND LAYER OF SEVEN DRUMS:

POSITION	WEIGHT
8	HEAVIEST DRUM
9	NEXT HEAVIEST DRUM
10	THIRD HEAVIEST DRUM
11	FOURTH HEAVIEST DRUM
12	FIFTH HEAVIEST DRUM
13	SIXTH HEAVIEST DRUM
14	LAST DRUM

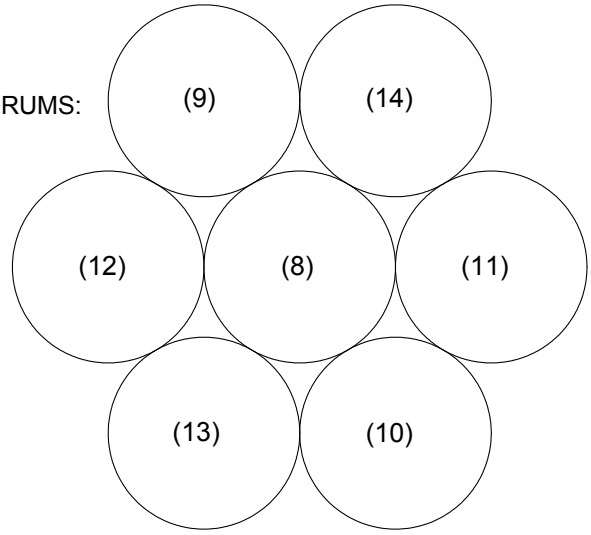

NOTES:

1. IF DUNNAGE IS USED, IT MAY BE PLACED AS NEEDED.

2. VERIFY THE HEAVIEST SEVEN PACK WILL COMPRISE THE LOWER LAYER OF SEVEN DRUMS.

3. DRUMS IN AN ASSEMBLY SHOULD BE APPROXIMATELY THE SAME HEIGHT SUCH THAT A FLAT STACKING SURFACE IS ACHIEVED. THAT IS, THE MAXIMUM DIFFERENCE BETWEEN THE SHORTEST AND TALLEST DRUMS IN AN ASSEMBLY SHALL NOT EXCEED 1/2 IN., WITH THE EXCEPTION OF THE CENTER DRUM IN A SEVEN-PACK ASSEMBLY, WHICH MAY BE UP TO ONE INCH SHORTER BUT NO TALLER THAN THE TALLEST DRUM IN THE SEVEN-PACK ASSEMBLY.

4. TAPE MAY BE USED TO SECURE THE REINFORCEMENT SHEET TABS TO THE DRUMS PRIOR TO APPLYING STRETCH WRAP.

5. ONLY THE COMPONENTS SHOWN IN FIGURE 1.2 ARE APPROVED FOR USE IN 55-GALLON DRUM PAYLOAD ASSEMBLY (STRETCH WRAP AND TAPE NOT SHOWN FOR CLARITY).

Figure 1.2 - 55-Gallon Drum Payload Assembly

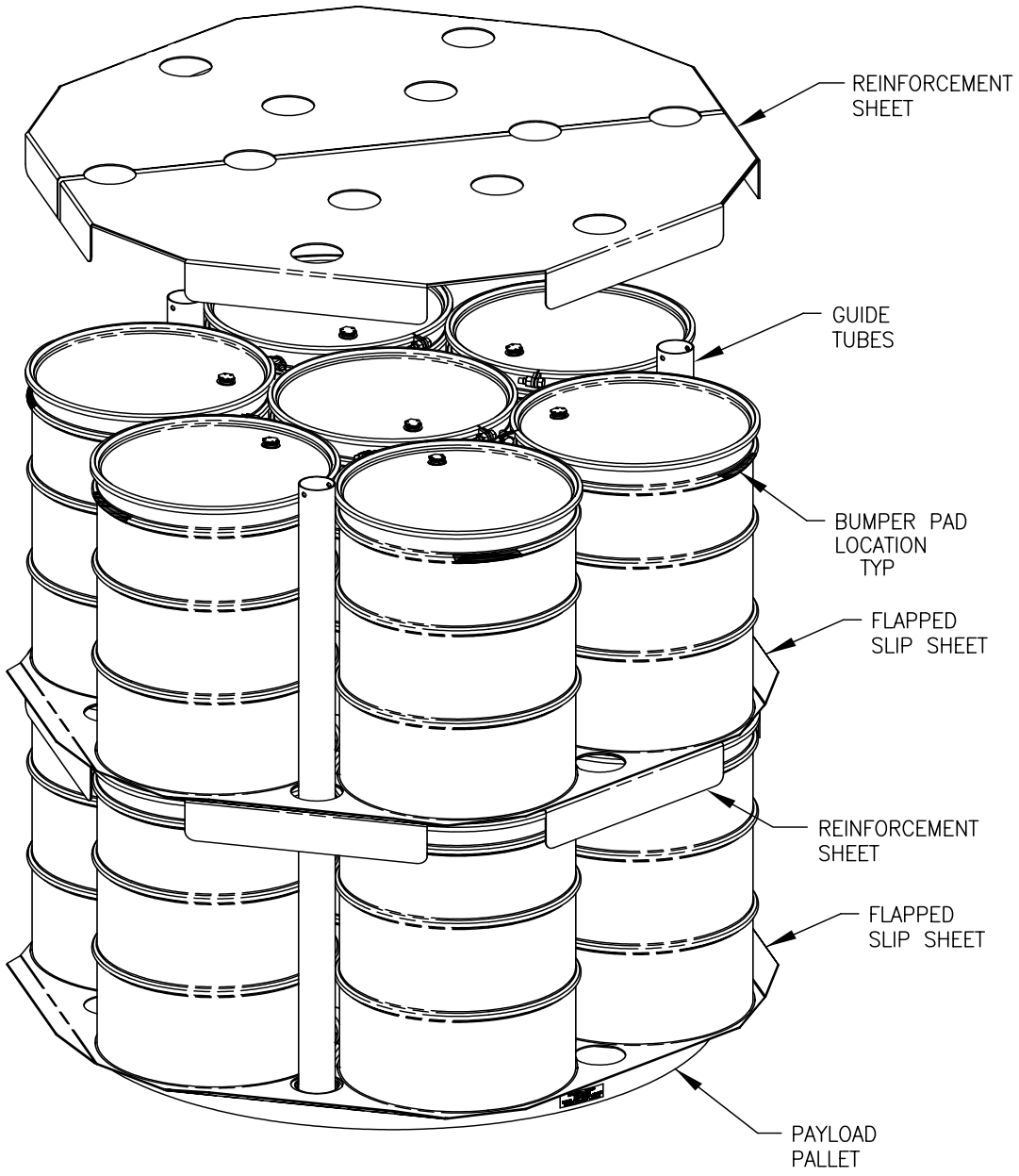

Figure 1.3 - SWB Payload Assembly

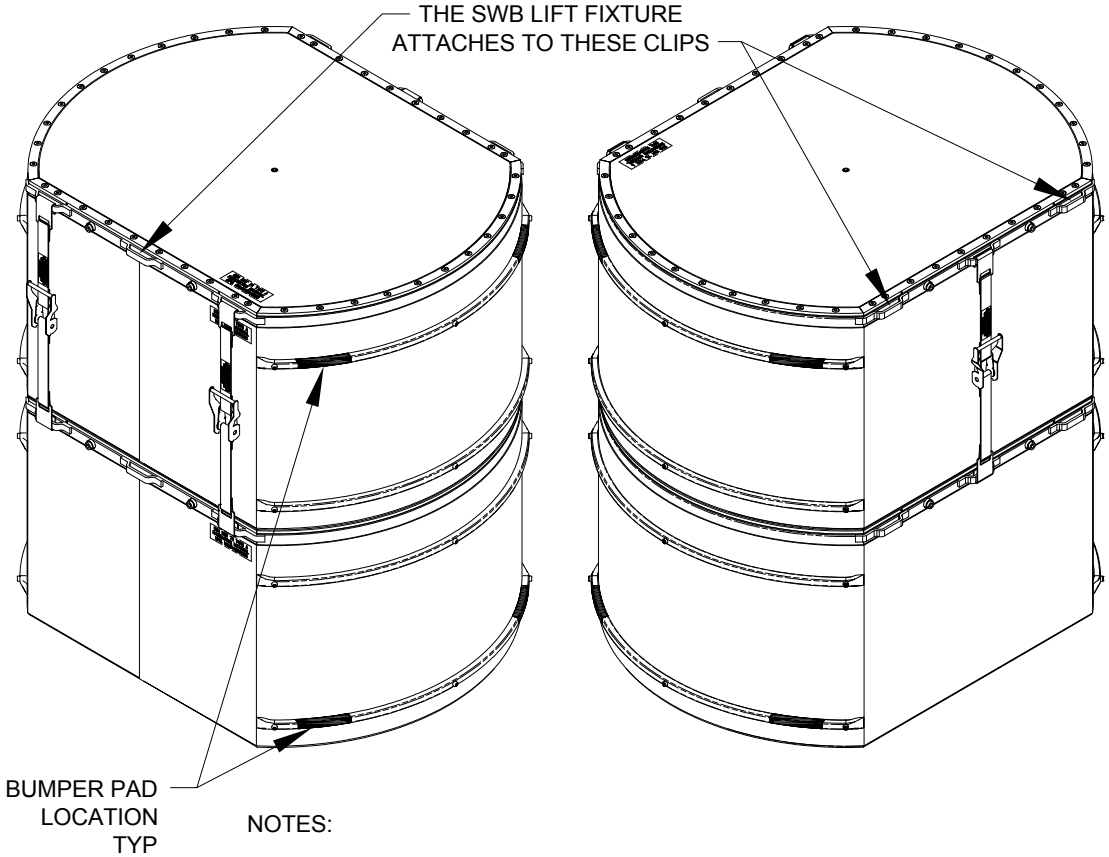

NOTES:

1. CONNECT 2 SWB'S WITH 3 SLINGS (AS SHOWN) AND TIGHTEN PER MFGR. INSTRUCTIONS.

2. ONLY THE COMPONENTS SHOWN IN FIGURE 1.3 ARE APPROVED FOR USE IN SWB PAYLOAD ASSEMBLY.

Inspection - Before each use, each SWB adjustable sling assembly shall be visually inspected to verify the webbing red wear indicator threads are not exposed due to abrasion, and the annual inspection date has not elapsed.

Before lifting, the ratchet buckle shall be visually inspected to verify the ratchet teeth are securely engaged and there are nominally three wraps (or 1-1/2 turns) of webbing around the mandrel. It is acceptable for the adjustable slings to be installed as shown in Figure 1.3, or in the reverse orientation with the handle pointed down.

The assembly shall also be checked to verify the webbing is in tension before each loading operation and before each unloading operation.

Annual Inspection - Each SWB sling assembly including webbing, ratchet buckle, and hooks shall be inspected for signs of excessive wear, cracking, or physical damage. If the webbing, ratchet buckle, or hooks are excessively worn, cracked, or damaged, the assembly shall **NOT** be used. Annual inspection shall be recorded.

Figure 1.4 - TDOP Payload Assembly

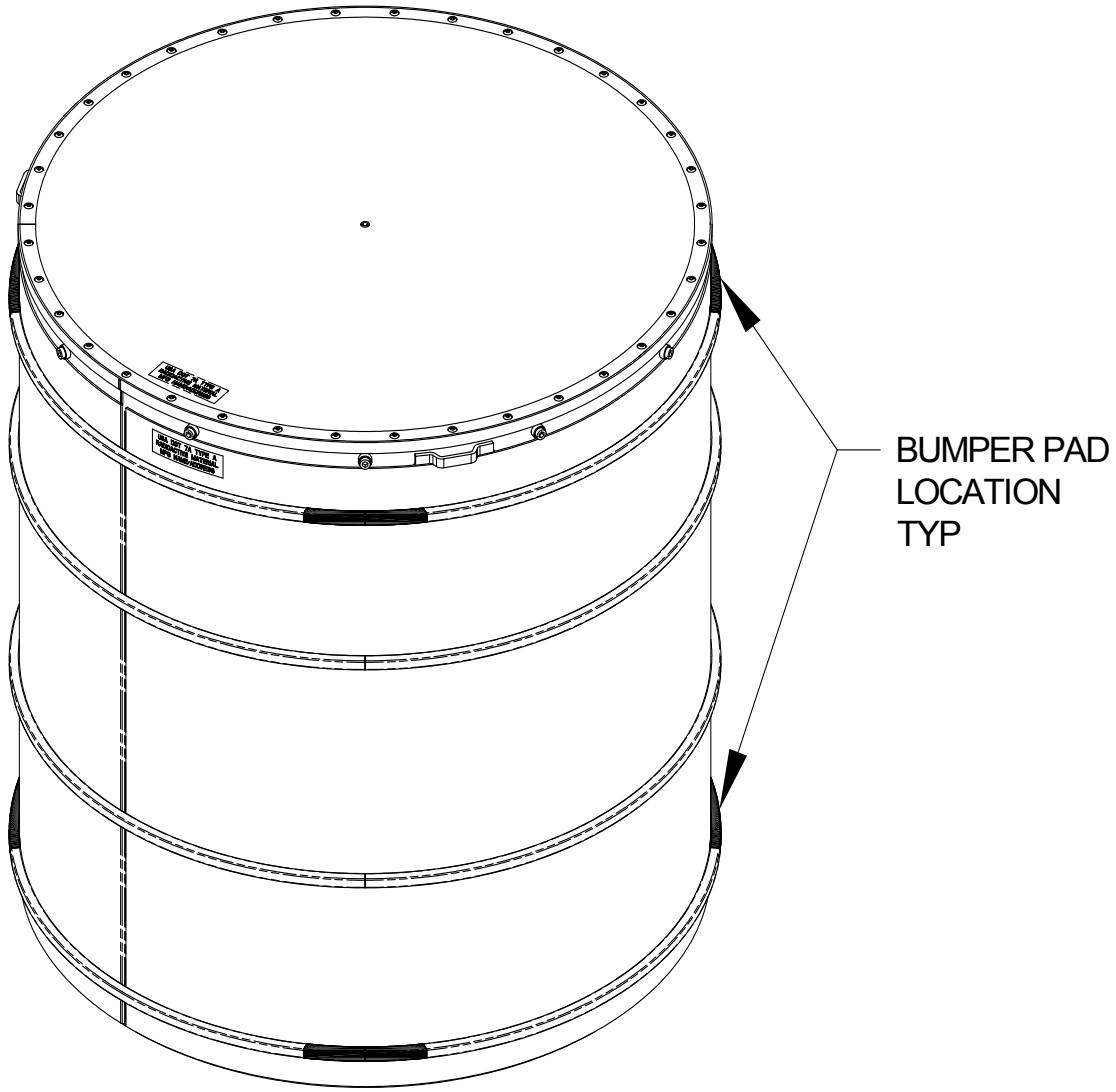

NOTES:

1. ONLY THE COMPONENTS SHOWN IN FIGURE 1.4 ARE APPROVED FOR USE IN TDOP PAYLOAD ASSEMBLY.

2.0 NORMAL OPERATING INSTRUCTIONS

CAUTION

If the payload pallet will be placed on a square pallet for subsequent movement by forklift, care must be taken to ensure all three pockets used for lifting with the ACGLF rest on a flat surface. Failure to ensure this may result in pallet damage due to the weight of the ACGLF driving the pallet lift point through the pallet.

NOTE

Torquing of components that are replaced using the minor maintenance work instructions may be completed during assembly step and do not require a second or repeat torque when using minor maintenance form.

NOTE

Transport trailer operations, package loading and unloading from transport trailers, hoisting and rigging activities such as ACGLF operations, equipment checkout and shutdown, and component inspection activities must be performed, but may be performed in any order and in parallel with other activities as long as radiological control steps are not bypassed. Steps involving outer containment assembly (OCA)/inner containment vessel (ICV) lid removal/installation and payload removal/loading may be performed in parallel if there are multiple operators working on the same packaging.

2.1 Basic Information

2.1.1 Introduction - This procedure provides operating instructions for the following CH packaging:

- TRUPACT-II

2.1.2 References

- 49 CFR Part 172, "Hazardous Materials Table, Special Provisions, Hazardous Materials Communications, Emergency Response Information, and Training Requirements"
- 49 CFR Part 173, "Shippers - General Requirements for Shipments and Packagings"
- U.S. Department of Energy, Safety Analysis Report for the TRUPACT-II Shipping Package
- TRUPACT-II Certificate of Compliance No. 9218

- Contact-Handled Transuranic Waste Authorized Methods for Payload Control (CH-TRAMPAC)
- CH-TRU Payload Appendices
- DOE/WIPP 02-3183, *CH Packaging Program Guidance*
- DOE/WIPP 02-3185, *CH Packaging Maintenance Manual*
- WP 08-PT.04, CH Packaging Trailer O&M Manual

2.1.3 Equipment

- Calibrated Measuring and Test Equipment
  - Pressure/vacuum gauge, 30-in. Hg to 30 psig
  - Torque wrench with 55 to 65 pound (lb) in. range
  - Torque wrench with 30 to 50 pound feet (lb-ft) range
  - Crane load cell, 10,000 lb minimum rating
- Other Equipment
  - ICV/Outer Containment Vessel (OCV) vent port plug removal/pressure relief tool
  - Miscellaneous hardware and vacuum assembly connections
  - Vacuum pump
  - ICV/OCV outer vent port plug removal and installation tool
- Consumable Materials
  - Vacuum grease
  - Nickel bearing lubricant
  - Denatured alcohol
  - Lint-free rags
  - 250 ft^3 (minimum) of dry inert (nitrogen or argon) gas
- Evacuation/Backfill Cart
  - Dry vacuum pump (oil-free) with a minimum flow rate of 11.9 scfm and an ultimate base pressure of 50 mTorr or less

- Evacuation/backfill line, 1-in. i.d. tubing (length as required)
- One 1-in. ball valve
- Compressed gas regulator (capable of regulating to 1-psi increments)
- Quick connect fitting, P/N SSQC8-D-810
- Tube reducer, P/N SS-810-R-16
- Flow meter capable of 75 cfh
- Pressure transducer with digital readout display

2.1.4 Precautions and Limitations

- Failure to rotate the counterweights on ACGLF to the balance position may cause ACGLF to swing uncontrollably.
- Measures shall be implemented by all users for the identification and control of parts and components. These measures shall be designed to prevent the use of incorrect or defective parts and components on the packaging.
- Pressure transducer and controller installed in evacuation/backfill cart must be energized at least 30 minutes before initiating evacuation process in Subsection 2.17, ICV Lid Installation.
- Jack stands are required on freestanding trailers only when loading/unloading packaging on the trailer.
- Metal tools must not be used to remove O-rings.
- OCV/ICV lids shall be removed using a straight (vertical) pull; side pulls are not permitted.

2.2 Packaging (Empty) Receipt

NOTE

The packaging loading/unloading operation shall only be performed in a dry environment. In the event of precipitation during outdoor operations, the OCV and ICV cavities shall be covered to prevent precipitation from entering the package interior cavities. If precipitation does enter the interior cavities, all freestanding water shall be removed before shipment and liquid handled according to the site's waste management procedures.

2.2.1 Record OCA serial number on Attachment 1, High-Wattage CH Packaging Receipt and Inspection Data Sheet.

SIGN-OFF

2.2.2 Verify site representative performed the following:

- Released packaging for loading
- Validated shipping documents
- Inspected packaging for damage
- Checked nameplate to verify packages are proper for contents being shipped

SIGN-OFF

2.2.3 Verify packaging maintenance labels are legible and maintenance is current by checking maintenance labels adjacent to name plate and initial Attachment 1.

SIGN-OFF

2.2.4 Check for LEAK TEST REQUIRED tag near OCA vent port.

2.2.5 If LEAK TEST REQUIRED tag is present, remove tag and forward to supervisor so a leak test report will be sent to the WIPP M&O CH Packaging Maintenance Engineer.

CAUTION

A physical check shall be made to verify air bags on trailer have fully inflated before trailer is moved. Failure to do so may cause the tires to rub on bottom of rear package.

2.2.6 Position transport trailer in designated parking area.

2.2.7 Lower trailer jacks (landing gear) ensuring trailer is level.

2.2.8 Install wheel chocks.

2.2.9 Install trailer stands on freestanding trailers.

2.3 Releasing Tie-Downs and Removal of Packaging from Trailer

2.3.1 **IF** packaging will **NOT** be removed from trailer for loading operations,
THEN GO TO Subsection 2.4, OCA Lid Removal.

2.3.2 Release tie-downs from packaging.

NOTE

Trailer tie-down guidance is provided in WP 08-PT.04. This document is available on the Internet at http://www.wipp.ws/library/caolib.htm#containers.

2.3.3 Rotate forklift pocket covers (4) to UP position,
OR remove covers and store in designated area.

2.3.4 If required, dry packaging before transport to designated area.

CAUTION

Forklift tip-back beyond level may damage package exterior surface.

2.3.5 Transfer packaging to designated area.

2.4 OCA Lid Removal

2.4.1 Prepare OCA lid by removing the following:

- OCA lift pocket covers
- OCA lock bolts (6)
- OCV seal test port access plug and thermal plug
- OCV vent port access plug and thermal plug

NOTE

If OCA lid is turned so that the OCV seal test port plug is not accessible, Step 2.4.2 cannot be performed; operator must proceed to Step 2.4.3.

2.4.2 Verify OCV seal test port plug is fully seated.

2.4.3 Remove OCV vent port cover.

2.4.4 Remove OCV vent port plug.

CAUTION

Operator shall verify two ACGLF counterweights are at 180 degrees and 000 degrees (± 2 degrees) **BEFORE** lifting ACGLF or lid.

2.4.5 Attach ACGLF to OCA lid.

2.4.6 Install OCV vent port tool.

2.4.7 Connect vacuum line to vent port tool.

2.4.8 Start vacuum pump and evacuate to 3 to 15 in. Hg vacuum gauge.

2.4.9 Rotate OCV lock ring to UNLOCKED position.

2.4.10 Stop vacuum pump.

2.4.11 Disconnect vacuum line from vent port tool.

2.4.12 Remove vent port tool.

2.4.13 Let OCV vent to atmosphere.

CAUTION

Operator shall verify two ACGLF counterweights are at 180 degrees and 000 degrees (± 2 degrees) **BEFORE** lifting ACGLF or lid.

CAUTION

Load cell reading **MUST NOT** exceed 7,500 lb when weight of ACGLF is zeroed out, **OR** 10,000 lb when weight of ACGLF is included.

2.4.14 Remove OCA lid.

2.4.15 **IF** lid does not lift off,
THEN perform the following:

[A] Contact supervisor.

[B] **GO TO** Subsection 3.2, Using Heat Guns
OR Subsection 3.3, Pressurizing with Nitrogen or Compressed Air to Remove Stuck Lids, attempt to remove lid, and **RETURN TO** Step 2.4.16.

2.4.16 Place OCA lid on storage stand.

2.5 ICV Lid Removal

CAUTION

Operator shall verify two ACGLF counterweights are at 180 degrees and 000 degrees (± 2 degrees) **BEFORE** lifting ACGLF or lid.

2.5.1 Attach ACGLF to ICV lid.

2.5.2 Remove ICV vent port cover.

2.5.3 Remove the following:

- ICV outer vent port plug
- ICV lock bolts (3)
- ICV seal test port plug
- OCV seal test port plug

2.5.4 Remove ICV inner vent port plug.

2.5.5 Install ICV vent port tool.

2.5.6 Connect vacuum line to vent port tool.

2.5.7 Start vacuum pump and evacuate to 3 to 15 in. Hg vacuum gauge.

2.5.8 Rotate ICV lock ring to UNLOCKED position.

2.5.9 Stop vacuum pump.

2.5.10 Disconnect vacuum line from vent port tool.

2.5.11 Remove vent port tool.

2.5.12 Vent ICV to atmosphere.

CAUTION

Load cell reading **MUST NOT** exceed 5,000 lb when weight of ACGLF is zeroed out, **OR** 7,500 lb when weight of ACGLF is included.

2.5.13 Remove ICV lid using ACGLF and crane.

2.5.14 **IF** lid does not lift off ICV,
THEN perform the following:

[A] Contact supervisor.

[B] **GO TO** Subsection 3.2,
OR Subsection 3.3, attempt to remove lid, and
RETURN TO Step 2.5.15.

2.5.15 Place ICV lid on storage stand.

NOTE

Use of the ACGLF with short legs to remove items from the ICV is **NOT** permitted.

2.5.16 Remove any payload pallets, guide tubes, slip sheets, reinforcement sheets, dunnage containers, etc.

2.6 Preloading/Shipping Operational Checks and Examinations

2.6.1 Radiological Control Technician (RCT), **IF** surveys for items in Step 2.7.1, Step 2.8.1, or Step 2.9.1 have been completed previously **AND** results are below contamination limits, **THEN** enter applicable data for each step on Attachment 1.

2.6.2 RCT, **IF** surveys have **NOT** been completed previously, **THEN GO TO** Subsection 2.7, OCA Lid Inspection and Cleaning, Subsection 2.8, ICV Lid Inspection and Cleaning, or Subsection 2.9, OCA Body Inspection and Cleaning, as applicable.

NOTE

Subsections 2.7 through 2.13, ICV Cavity Inspection (and included steps), **MUST** be completed, but may be performed in any order as long as radiological control steps are not bypassed.

2.7 OCA Lid Inspection and Cleaning

2.7.1 RCT, **IF** survey has not been completed previously, **THEN** survey interior and exterior of OCA lid and record applicable data on Attachment 1.

SIGN-OFF

2.7.2 Inspect OCA lid for the following:

- Visible deformation
- Dents or abnormal flat spots > 1/2 in.
- Abnormal scratches or gouges
- Obvious punctures, tears, or cracks in exposed welds
- Burnout plugs (3) in place and intact
- Lift pocket tubes in place
- Distortions or cracks on or around lifting attachments
- Lift pocket covers attached and serviceable
- OCV locking Z-flange screws in place and torque paint unbroken; or, if no torque paint, screws torqued to 22 lb-in.

- Guide plates and screws in place and screws torqued to 21 lb-in., or no looseness in plate and screws recessed.

- Seal surfaces for scratches/gouges perpendicular to machining marks

2.7.3 Remove foreign material from the following:

- Lock ring
- Sealing surfaces
- Test port access threads

2.7.4 Verify arrow above seal test port aligns with UNLOCKED arrow on lock ring.

2.7.5 Initial Attachment 1 to document OCA lid components and hardware are satisfactory.

SIGN-OFF

2.8 ICV Lid Inspection and Cleaning

NOTE

O-rings are considered clean when they are absent of free-standing vacuum grease, dirt, debris, and other foreign matter.

2.8.1 RCT, **IF** survey has **NOT** been completed previously, **THEN** survey interior and exterior of ICV lid and record applicable data on Attachment 1.

SIGN-OFF

2.8.2 Inspect ICV lid for the following:

- Visible deformation

- Punctures

- Abnormal scratches or gouges

- Distortions on or around lifting attachments

- Upper spacer and screws installed and torque paint unbroken; or, if no torque paint, screws torqued to 10 lb-in.

- Debris shield installed and undamaged

- Lock ring undamaged

- Damaged or missing screws from wiper O-ring holder
- Seal surfaces for scratches/gouges perpendicular to machining marks

2.8.3 Remove foreign material from the following:

- Lock ring flange
- Debris shield
- Sealing surfaces

2.8.4 Remove ICV wiper O-ring.

2.8.5 Clean ICV wiper O-ring and inspect for wear or damage that could impair its function.

2.8.6 **IF** O-ring is damaged,
THEN GO TO corresponding WI and **RETURN TO** Step 2.8.9.

2.8.7 Lubricate wiper O-ring with a light coat of vacuum grease.

2.8.8 Install wiper O-ring.

2.8.9 Initial Attachment 1 to document ICV lid components and hardware are satisfactory.

SIGN-OFF

2.9 OCA Body Inspection and Cleaning

2.9.1 RCT, **IF** survey has **NOT** been completed previously,
THEN survey OCA body exterior and ICV body interior and record applicable data on Attachment 1.

SIGN-OFF

2.9.2 Remove upper and lower main O-rings and set aside for cleaning and inspection.

2.9.3 Inspect OCA body for the following:

- Visible deformation
- Obvious punctures or tears
- Obvious cracks in exposed welds
- Dents or abnormal flat spots > 1/2 in.

- Abnormal scratches or gouges
- Burnout plugs (6) in place and undamaged
- Forklift pocket threaded inserts (8) intact and threads undamaged
- Lock bolt threaded inserts (6) intact and threads undamaged
- Tears or fraying > 1/4 in. on ceramic fiber gasket
- Lock ring stop(s) undamaged
- Upper and lower O-ring grooves and seal surfaces for scratches/gouges perpendicular to machining marks

2.9.4 Remove foreign material from the following:

- Test port threads
- Vent port threads
- Lock ring flange
- O-ring grooves
- Sealing surfaces

2.9.5 Verify air flow through OCV helium (He) test ports.

2.9.6 Initial Attachment 1 to document OCA body inspection is satisfactory.

SIGN-OFF

2.10 OCA Components Inspection and Cleaning

NOTE

O-rings are considered clean when they are absent of free-standing vacuum grease, dirt, debris, and other foreign matter.

2.10.1 Clean and inspect the following for wear or damage that could impair their function:

- OCV vent port plug and handling O-ring
- OCV vent port cover and O-rings
- OCV seal test port plug and O-ring
- Lock bolts (6)
- OCV seal test port access plug
- OCV vent port access plug

2.10.2 **IF** components are damaged,

THEN GO TO corresponding WI and **RETURN TO** Step 2.10.4.

2.10.3 Apply a light coat of vacuum grease to the following:

- OCV vent port plug threads
- OCV vent port cover threads and seal O-ring
- OCV seal test port plug threads and seal O-ring

2.10.4 Verify annulus debris seal is installed and undamaged.

2.10.5 Lightly coat the following with nickel bearing lubricant:

- OCA lock bolt threads (6)
- OCV seal test port access plug threads
- OCV vent port access plug threads

2.10.6 Clean and inspect upper and lower main O-rings and vent port plug seal O-ring for damage that could impair containment integrity.

2.10.7 **IF** O-rings are damaged,
THEN GO TO corresponding WI and **RETURN TO** Step 2.10.10.

NOTE

Lubrication and installation of upper and lower main O-rings may be performed after Step 2.16.20, but prior to Subsection 2.19, OCA Lid Installation.

2.10.8 Lubricate upper and lower main O-rings and vent port plug seal O-ring with a light coat of vacuum grease.

2.10.9 Install upper and lower main O-rings and vent port plug seal O-ring.

2.10.10 Initial Attachment 1 to document OCA component and hardware inspections are satisfactory.

SIGN-OFF

2.11 ICV Body Inspection and Cleaning

2.11.1 Remove upper and lower main O-rings and set aside for cleaning and inspection.

2.11.2 Inspect for the following:

- Lock ring stop(s) undamaged
- Lock bolt threaded inserts installed and threads undamaged

2.11.3 Remove foreign material from the following:

- Test port threads
- Vent port threads
- Lock ring flange
- O-ring grooves
- Filter ports
- Sealing surfaces

2.11.4 Inspect the following for deformation, scratches, or burrs:

- Upper and lower O-ring grooves and sealing surfaces for scratches/gouges perpendicular to machining marks
- Vent port threads
- Seal test port threads
- Lock ring flange
- Lower spacer installed with no punctures in top plate
- Lower spacer screws installed and no detectable gap between screw head and spacer top plate

2.11.5 Verify airflow through ICV He test ports.

2.11.6 Initial Attachment 1 to document ICV body inspection is satisfactory.

SIGN-OFF

2.12 ICV Components Inspection and Cleaning

NOTE

O-rings are considered clean when they are absent of free-standing vacuum grease, dirt, debris, and other foreign matter.

2.12.1 Clean and inspect the following for wear or damage that could impair their function:

- ICV vent port cover and seal
- ICV outer vent port plug
- ICV inner vent port plug and seal O-ring
- ICV seal test port plug and seal O-ring
- ICV lock bolts (3)

2.12.2 **IF** components are damaged,
THEN GO TO corresponding WI and **RETURN TO** Step 2.12.4.

2.12.3 Apply a light coat of vacuum grease to the following:

- ICV vent port cover threads (and O-ring if installed)
- ICV outer vent port plug threads
- ICV inner vent port plug threads and seal O-ring
- ICV seal test port plug threads and seal O-ring

2.12.4 Coat ICV lock bolt threads (3) lightly with nickel bearing lubricant.

2.12.5 Clean upper and lower main O-rings and ICV outer vent port plug seal O-ring, and inspect for damage that could impair containment integrity.

2.12.6 **IF** O-rings are damaged,
THEN GO TO corresponding WI and **RETURN TO** Step 2.12.9.

NOTE

Lubrication and installation of upper and lower main O-rings may be performed after Step 2.16.21, but prior to Subsection 2.17, ICV Lid Installation.

2.12.7 Lubricate upper and lower main O-rings and ICV outer vent port plug seal O-ring with a light coat of vacuum grease.

2.12.8 Install upper and lower main O-rings and ICV outer vent port plug seal O-ring.

2.12.9 Initial Attachment 1 to document ICV components and hardware inspections are satisfactory.

SIGN-OFF

2.13 ICV Cavity Inspection

2.13.1 Check ICV cavity for water by visually inspecting the absorbent material inserted into hole in lower spacer assembly.

NOTE

Disposal of absorbent material and water will be at direction of RCT.

2.13.2 **IF** water is inside ICV,
THEN perform one of the following:

- Remove water through center hole of lower spacer assembly using wet/dry vacuum
- Attach absorbent material to rod and insert in hole in center of lower spacer assembly

2.13.3 **IF** water is inside ICV,
THEN GO TO Subsection 3.1, Empty ICV Assembly Removal, perform steps and **RETURN TO** Step 2.13.4.

2.13.4 Initial Attachment 1 to document ICV is free of water.

SIGN-OFF

2.14 Preloading Operations

2.14.1 Verify all preloading cleaning and inspections are complete.

SIGN-OFF

2.15 Packaging Receipt and Inspection Data Sheet Validation

2.15.1 Supervisor, review/validate and sign Attachment 1.

SIGN-OFF

2.16 Loading Payload Assembly

2.16.1 Record OCA serial number on Attachment 2, High-Wattage CH Packaging Loading Data Sheet, and Attachment 4, High-Wattage Loaded Package Receipt and Processing Data Sheet.

SIGN-OFF

2.16.2 Record pallet or SWB ratchet strap serial numbers on Attachment 2.

SIGN-OFF

2.16.3 Record shipment number, trailer number, and package number(s) on Attachment 3, High-Wattage Loaded CH Package Trailer Data Sheet.

SIGN-OFF

2.16.4 Verify payload is assembled using requirements delineated in the CH-TRAMPAC and initial Attachment 2.

SIGN-OFF

2.16.5 Record the **HIGHEST** container wattage from each content code in the payload on Attachment 2.

SIGN-OFF

2.16.6 Using the highest wattage from each content code recorded in Step 2.16.5, verify the highest wattage for each container of the applicable content code is equal to or less than the limits given in the table on Attachment 2.

SIGN-OFF

CAUTION

Operator shall verify two ACGLF counterweights are at 180 degrees and 000 degrees (± 2 degrees) **BEFORE** lifting ACGLF or lid.

2.16.7 Attach appropriate legs/adapter to ACGLF.

2.16.8 Lower ACGLF long legs into drum payload assembly guide tubes, **OR** lower SWB or TDOP adaptor until no load is indicated on crane load cell.

2.16.9 Lock ACGLF legs,
OR attach SWB lift fixture to upper SWB or TDOP adaptor to TDOP as applicable.

2.16.10 Raise payload 2 to 6 in.

2.16.11 If necessary, balance payload using counter weight controls at ACGLF console until a reading of ± 0.5 degrees is obtained.

NOTE

Payload assembly weight shall be equal to or less than the limits specified in the CH-TRAMPAC.

2.16.12 Record payload assembly weight (i.e., drum [or SWBs, TDOP] + pallet + guide tubes + slip sheets) on Attachment 2.

SIGN-OFF

2.16.13 Obtain packaging weight from WIPP WWIS [WIPP Waste Information System] Packaging Reference Data Table.

2.16.14 Record empty packaging weight on Attachment 2.

SIGN-OFF

2.16.15 Add two previously recorded weight values to calculate the total package weight and record on Attachment 2.

SIGN-OFF

2.16.16 Verify total loaded package weight for TRUPACT-II does not exceed 19,250 lb:

2.16.17 Raise and position payload assembly over ICV cavity using crane and ACGLF.

2.16.18 Verify payload is centered over ICV **BEFORE** lowering load.

CAUTION

Care should be exercised to avoid hitting, scraping, or binding the payload assembly against ICV body flange and internal surface.

2.16.19 Lower payload assembly into ICV.

2.16.20 Record weight positions of ACGLF on top of payload near leg opposite the electrical junction boxes.

CAUTION

Operator shall verify two ACGLF counterweights are at 180 degrees and 000 degrees (± 2 degrees) **BEFORE** lifting ACGLF or lid.

2.16.21 Remove ACGLF/adaptor from payload.

NOTE

Valves V-1 and V-2 may be cycled as necessary to obtain system pressure readings in Subsections 2.17 and 2.18.

2.17 ICV Lid Installation

2.17.1 Match ICV lid and body serial numbers and record ICV serial number on Attachment 2.

SIGN-OFF

2.17.2 Record torque wrench serial numbers and calibration due date on Attachment 2.

SIGN-OFF

CAUTION

Operator shall verify two ACGLF counterweights are at 180 degrees and 000 degrees (± 2 degrees) **BEFORE** lifting ACGLF or lid.

2.17.3 Attach ACGLF to ICV lid.

2.17.4 Align UNLOCKED arrows and install ICV lid onto ICV body using crane and ACGLF.

2.17.5 Verify inner vent port plug is retracted into ICV vent port tool.

2.17.6 Install ICV vent port tool into ICV vent port.

NOTE

Steps 2.17.7 through 2.19.12 incorporate the use of an evacuation/backfill cart identified in Step 2.1.3.

2.17.7 Install Radiation Assessment Filter (RAF) assembly (with a filter installed) on the ICV vent port tool.

2.17.8 Verify vent port isolation valve V-4 is open.

2.17.9 Verify pressure transducer isolation valve (V-1) is open.

2.17.10 Verify vacuum pump isolation valve (V-2) is open.

2.17.11 Verify inert gas isolation valve (V-3) is closed.

2.17.12 Record ambient atmospheric pressure (Torr) on Attachment 2.

SIGN-OFF

2.17.13 Start vacuum pump and reduce pressure to a minimum of 3 in. (76 Torr), Hg **LESS** than the ambient pressure recorded in Step 2.17.12.

2.17.14 Rotate ICV lock ring to LOCKED position.

2.17.15 Close valve V-1.

NOTE

The ICV shall be evacuated for a minimum of twelve hours.

2.17.16 Record evacuation start time and date on Attachment 2.

SIGN-OFF

2.17.17 Open valve V-1 and monitor pressure.

2.17.18 Verify the pressure is ≤ 2 Torr, and perform the following:

[A] Compare the required minimum pressure (2 Torr) to the current ICV pressure.

[B] If the current ICV pressure is **GREATER** than 2 Torr, continue pumping until the ICV pressure is ≤ 2 Torr.

2.17.19 Record final pressure (mTorr) on Attachment 2.

SIGN-OFF

2.17.20 Close valve V-2 and stop vacuum pump.

2.17.21 Record evacuation end time and date on Attachment 2.

SIGN-OFF

2.17.22 Immediately record T_{start} on Attachment 2 and Attachment 9, Time and Date Data Sheet for Shipment of High-Wattage Waste.

SIGN-OFF

2.17.23 Close valve V-4 and remove RAF filter and screens from the RAF housing assembly.

2.17.24 Reassemble RAF housing assembly, excluding the filter.

HOLD POINT

2.17.25 RCT, survey filter for contamination following site-specific procedures and initial Attachment 4.

SIGN-OFF

2.17.26 Calculate $T_{unload_120} = T_{start} + 120$ hours (LA154) or $T_{unload_240} = T_{start} + 240$ hours (SQ154) and record on Attachment 4.

SIGN-OFF

NOTE

The value for T_{unload_120} must be $\leq$ 120 hours or 5 days for all LA154 Content Codes.

The value for T_{unload_240} must be $\leq$ 240 hours or 10 days for all SQ154 Content Codes.

2.18 Inert Gas Backfill (Nitrogen or Argon)

2.18.1 Open valve V-4.

2.18.2 Open valve V-3.

2.18.3 Open valve on gas supply source.

2.18.4 Adjust flow meter to a flow rate of about 60 cfh.

CAUTION

Do not allow pressure inside ICV to exceed the ambient atmospheric pressure recorded in Step 2.17.12 by more than 25 Torr.

2.18.5 Monitor pressure inside ICV.

2.18.6 When pressure inside ICV is equal to the ambient atmospheric pressure recorded in Step 2.17.12 (+25, −5 Torr), close valve V-3.

2.18.7 Adjust flow regulator fully to stop the flow and close valve on top of gas supply source.

2.18.8 Record stabilization start time and date on Attachment 2.

SIGN-OFF

2.18.9 Allow a 2-hour stabilization period. Monitor pressure inside ICV. If pressure inside ICV does not decrease below the ambient atmospheric pressure recorded in Step 2.17.12 (−5 Torr), after the 2-hour stabilization period, the backfill process is complete. **GO TO** Step 2.18.11.

2.18.10 **IF** pressure inside ICV decreases below the ambient atmospheric pressure recorded in Step 2.17.12 (−5 Torr), within the 2-hour stabilization period,
THEN perform the following:

[A] Open valve on gas supply source.

[B] Open valve V-3.

[C] Adjust flow regulator slowly to bring pressure inside ICV to the ambient atmospheric pressure recorded in Step 2.17.12 (+25, −5 Torr).

[D] Close valve on gas supply.

2.18.11 When backfill process is complete, close valve V-1.

2.18.12 Record stabilization end time and date on Attachment 2.

SIGN-OFF

2.18.13 Install ICV inner vent port plug.

2.18.14 Disconnect vacuum line from ICV vent port tool.

2.18.15 Remove ICV vent port tool.

2.18.16 Torque inner vent port plug to 55 to 65 lb-in. and initial Attachment 2.

SIGN-OFF

2.18.17 Perform ICV preshipment leakage rate test per Section 4.0, Preshipment Leakage Rate Testing, and initial Attachment 2.

SIGN-OFF

2.18.18 Install ICV lock bolts (3).

2.18.19 Torque each ICV lock bolt to 28 to 32 lb-ft and initial Attachment 2.

SIGN-OFF

2.19 OCA Lid Installation

2.19.1 Match OCA lid and body serial numbers.

2.19.2 Record OCA serial number on Attachment 2.

SIGN-OFF

CAUTION

Operator shall verify two ACGLF counterweights are at 180 degrees and 000 degrees (± 2 degrees) **BEFORE** lifting ACGLF or lid.

2.19.3 Attach ACGLF to OCA lid.

2.19.4 Align UNLOCKED arrows and install OCA lid onto OCA body.

2.19.5 Verify OCV vent port plug is retracted into OCV vent port tool.

2.19.6 Install OCV vent port tool into OCV vent port.

2.19.7 Connect vacuum line to OCV vent port tool.

2.19.8 Start vacuum pump and evacuate to 3 to 15 in. Hg vacuum gauge.

2.19.9 Rotate OCV lock ring to LOCKED position.

2.19.10 Stop vacuum pump.

2.19.11 **IF** existing connection will be used for OCV leak test, **THEN GO TO** Step 2.19.13.

2.19.12 Disconnect vacuum line from vent port tool.

2.19.13 **GO TO** Section 4.0, perform OCV preshipment leakage rate test.

SIGN-OFF

2.19.14 Install OCA lock bolts (6).

2.19.15 Torque each OCA lock bolt to 28 to 32 lb-ft and initial Attachment 2.

SIGN-OFF

2.19.16 Install OCA lift pocket covers.

2.19.17 Install tamper-indicating security seal in both lock bolt on OCA thermal shield and OCV vent port access plug.

2.19.18 Record tamper-indicating security seals serial numbers on Attachment 2.

SIGN-OFF

2.19.19 Supervisor, verify that the containers and payload assembly have been approved in the WWIS and the final submittal has occurred.

SIGN-OFF

2.19.20 Supervisor, review/validate and sign Attachment 2.

SIGN-OFF

2.20 Installation of Package onto Transport Trailer

NOTE

When loading packages on trailer, or loading payload into packaging that is already on trailer, the following applies:

- Packages having a gross weight difference (heaviest to lightest) of 2,000 lb or less can be considered equal and do not require a specific sequence for positioning on the trailer.

- Packages having a gross weight difference (heaviest to lightest), greater than 2,000 lb shall be positioned on the trailer as follows:

TRAILER FRONT	*1. Heaviest	Medium	Lightest	*TRAILER REAR*
	2. Heaviest	Lightest	Medium	
	*3. Heaviest	Lightest	None	
	4. Lightest	Heaviest	None	
	5. Heaviest	None	None	

* Preferred method

2.20.1 Record the following on Attachment 3.

- Shipment number
- Trailer number
- Package number(s)

SIGN-OFF

2.20.2 Verify annual trailer inspection is current.

2.20.3 Record trailer inspection performed date on Attachment 3.

SIGN-OFF

NOTE

Trailer tie-down guidance is provided in WP 08-PT.04. This document is available on the Internet at http://www.wipp.ws/library/caolib.htm#containers.

2.20.4 Inspect tie-downs for the following:

- Damage
- Defects

2.20.5 **IF** packaging was removed for loading operations, **THEN** perform the following:

[A] Position transport trailer in designated area.

[B] Lower trailer jacks (landing gear), ensuring trailer is level.

[C] Install wheel chocks.

[D] Install jack stands on freestanding trailers.

CAUTION

Forklift tip-back beyond level may damage package exterior surface.

[E] Transport package to transport trailer.

[F] Load package designated for position #1 onto trailer with vent port on driver side of trailer.

[G] If applicable, load package designated for position #2 onto trailer with vent port on driver side of trailer.

[H] If applicable, load package designated for position #3 onto trailer with vent port on driver side of trailer.

NOTE

Trailer tie-down guidance is provided in WP 08-PT.04. This document is available on the Internet at http://www.wipp.ws/library/caolib.htm#containers.

[I] Install four tie-down assemblies for each package loaded on trailer.

[J] Install package forklift pocket access covers.

2.20.6 Record package positions and weights on Attachment 3.

SIGN-OFF

NOTE

The total weight of tractor, trailer, and payload cannot exceed 80,000 lb.

2.20.7 Record total weight of all loaded packages as payload weight on Attachment 3.

SIGN-OFF

2.20.8 Verify package(s) is in compliance with 49 CFR Part 172, Subpart D, "Marking"; Subpart E, "Labeling"; and Subpart F, "Placarding," and initial Attachment 3.

SIGN-OFF

2.20.9 Complete information transfer to shipping papers, including packaging pallet ID numbers and SWB ratchet strap serial numbers, as required, for the specific shipment.

2.20.10 Verify shipping papers are in accordance with 49 CFR Part 172, Subpart C, "Shipping Papers," and initial Attachment 3.

SIGN-OFF

2.20.11 Record date and time (as T_{ship}) shipment is ready to depart from the site on Attachment 3 and Attachment 9.

SIGN-OFF

2.20.12 Calculate $T_{loading} = T_{ship} - T_{start}$ = ___ Hours and record on Attachment 3 and Attachment 9.

SIGN-OFF

2.20.13 Verify $T_{loading}$ < 24 hours and initial both Attachment 3 and Attachment 9.

SIGN-OFF

2.20.14 If $T_{loading}$ > 24 hours, **GO TO** Subsection 3.4, Venting.

2.20.15 Transportation Certification Official (TCO), review/validate entries on Attachment 9 and sign.

2.20.16 Initial for trailer loading complete on Attachment 3.

SIGN-OFF

2.20.17 Supervisor, perform the following:

[A] Review/validate entries on Attachment 3 and sign.

[B] Copy Attachments 4 and 9 to include with shipping papers.

[C] Notify WIPP Central Monitoring Room of pending shipment.

SIGN-OFF

2.21 Package (Loaded) Receipt

NOTE

The package unloading operation shall only be performed in a dry environment. In the event of precipitation during outdoor unloading or loading operations, OCV and ICV cavities shall be covered to prevent precipitation from entering the interior cavities. If precipitation does enter interior cavities, all freestanding water shall be removed before shipment and liquid handled according to the site's waste management procedures.

2.21.1 Verify OCA serial number is recorded on Attachment 4.

SIGN-OFF

2.21.2 Record T_{arrive}, time and date on Attachment 4 and Attachment 10, Time and Date Data Sheet for Receipt of High-Wattage Waste.

SIGN-OFF

2.21.3 Calculate $T_{unload_24} = T_{arrive} + 24$ and record on Attachment 4.

SIGN-OFF

NOTE

The value for T_{unload_24} must be $\leq$ 24 hours.

2.21.4 Notify site representative that shipment shall be unloaded before either T_{unload_120}, T_{unload_240}, or T_{unload_24}, whichever is sooner, and record choice as T_{final} on Attachment 4.

SIGN-OFF

2.21.5 Verify site representative has performed the following and initial Attachment 4:

- Validated shipping documents
- Inspected package(s) for damage
- Released package(s) for unloading

SIGN-OFF

2.21.6 Survey package for external radiation and contamination using site-specific procedures and initial Attachment 4.

SIGN-OFF

CAUTION

A physical check shall be made to verify air bags on the trailer have fully inflated before trailer is moved. Failure to do so may cause the tires to rub on bottom of rear TRUPACT-II.

2.21.7 Position transport trailer in designated area.

2.21.8 Lower trailer jacks (landing gear), ensuring trailer is level.

2.21.9 Install wheel chocks.

2.21.10 Install trailer stands on freestanding trailers.

2.22 Releasing Tie-Downs and Removal of Package from Trailer

2.22.1 **IF** package will **NOT** be removed from trailer, **THEN GO TO** Subsection 2.23, OCA Lid Removal.

2.22.2 Release tie-downs from packaging.

NOTE

Additional trailer tie-down guidance is provided in WP 08-PT.04. This document is available on the Internet at http://www.wipp.ws/library/caolib.htm#containers.

2.22.3 Rotate four forklift pocket covers to UP position, **OR** remove four covers and store in designated area.

2.22.4 If required, dry package before transport to designated area.

CAUTION

Forklift tip-back beyond level may damage package exterior surface.

2.22.5 Transfer package to unloading area.

2.23 OCA Lid Removal

2.23.1 Remove and dispose of security seals.

2.23.2 If seal is broken or missing, follow applicable site policy.

2.23.3 Remove the following components to prepare OCA lid for removal:

- OCA lift pocket covers
- OCV seal test port access plug and thermal plug
- OCV vent port access plug and thermal plug
- OCA lock bolts (6)

NOTE

If OCA lid is turned so that the OCV seal test port plug is not accessible, Step 2.23.4 cannot be performed, and operator must proceed to Step 2.23.5.

2.23.4 Verify OCV seal test port plug is fully seated.

2.23.5 Remove OCV vent port cover.

NOTE

Torque on OCV vent port plug may be relieved prior to installation of OCV vent port tool.

2.23.6 Install OCV vent port tool.

2.23.7 Retrieve OCV vent port plug into vent port tool.

2.23.8 Connect vacuum line to vent port tool.

2.23.9 Start vacuum pump and evacuate to 3 to 15 in. Hg vacuum gauge.

2.23.10 Rotate OCV lock ring to UNLOCKED position.

2.23.11 Stop vacuum pump.

2.23.12 Disconnect vacuum line from vent port tool.

2.23.13 Remove vent port tool.

CAUTION

Operator shall verify two ACGLF counterweights are at 180 degrees and 000 degrees (± 2 degrees) **BEFORE** lifting ACGLF or lid.

2.23.14 Attach ACGLF to OCA lid.

CAUTION

Load cell reading **MUST NOT** exceed 7,500 lb when weight of ACGLF is zeroed out, **OR** 10,000 lb when weight of ACGLF is included.

2.23.15 Raise OCA lid slowly about 6 in. above the top of ICV lid, **OR** as directed by RCT.

2.23.16 **IF** lid does not lift off,
THEN perform the following:

[A] Contact Supervisor.

[B] **GO TO** Subsection 3.2 or Subsection 3.3, attempt to remove lid, and **RETURN TO** Step 2.23.17.

HOLD POINT

2.23.17 RCT, survey OCA lid interior surface and ICV lid exterior surface for radiation/contamination following site-specific procedures.

SIGN-OFF

2.23.18 Place OCA lid on storage stand.

2.24 ICV Lid Removal

CAUTION

Operator shall verify two ACGLF counterweights are at 180 degrees and 000 degrees (± 2 degrees) **BEFORE** lifting ACGLF or lid.

2.24.1 Attach ACGLF to ICV lid.

2.24.2 Remove ICV vent port cover.

2.24.3 Remove the following:

- ICV outer vent port plug
- ICV seal test port plug
- ICV lock bolts (3)
- OCV seal test port plug

WARNING

ICV inner vent port plug **MUST NOT** be removed if torque is relieved prior to installing ICV vent port tool. Plug removal may result in contamination of personnel and area.

NOTE

Torque on ICV inner vent port plug may be relieved prior to installation of ICV vent port tool.

2.24.4 Install ICV vent port tool.

2.24.5 Connect vacuum hose to vent port tool.

2.24.6 Retrieve ICV inner vent port plug into ICV vent port tool.

CAUTION

Vacuum should not exceed 15-in. Hg when attempting to open ICV.

2.24.7 Start vacuum pump and evacuate to 3 to 15 in. Hg vacuum gauge.

2.24.8 Record T_{ICV_open} on Attachment 4.

SIGN-OFF

2.24.9 Record date and time ICV was vented and verify within 24 hours of T_{arrive} on Attachment 10.

SIGN-OFF

2.24.10 Rotate ICV lock ring to UNLOCKED position.

2.24.11 Stop vacuum pump.

2.24.12 Disconnect vacuum line from ICV vent port tool.

HOLD POINT

2.24.13 RCT, survey for radiation/contamination using site-specific procedures.

SIGN-OFF

2.24.14 Remove ICV vent port tool and ICV inner vent port plug.

WARNING

In Step 2.24.15 the ICV body may have an inert atmosphere. Entry shall be prohibited until body has been vented.

CAUTION

Load cell reading **MUST NOT** exceed 5,000 lb when weight of ACGLF is zeroed out, **OR** 7,500 lb when weight of ACGLF is included.

2.24.15 Raise ICV lid slowly to clear ICV body and hold it about 2 ft above the top of ICV body flange, **OR** as directed by RCT.

2.24.16 **IF** lid does not lift off ICV,
THEN perform the following:

[A] Contact Supervisor.

[B] **GO TO** Subsection 3.2,
OR Subsection 3.3, attempt to remove lid, and
RETURN TO Step 2.24.17.

HOLD POINT

2.24.17 RCT, survey ICV lid interior surface and top of payload for radiation/contamination using site-specific procedures.

SIGN-OFF

2.24.18 Place ICV lid on storage stand.

2.25 Unloading Payload Assembly

CAUTION

Operator shall verify two ACGLF counterweights are at 180 degrees and 000 degrees (± 2 degrees) **BEFORE** lifting ACGLF or lid.

2.25.1 Attach ACGLF with appropriate legs/adaptor to payload.

2.25.2 Position ACGLF counterweights to predetermined positions as marked on top of payload.

NOTE

Steps 2.25.3 and 2.25.4 are to be performed concurrently to remove payload.

2.25.3 Raise payload assembly slowly.

2.25.4 Inspect payload for damage and initial Attachment 4.

SIGN-OFF

HOLD POINT

2.25.5 RCT, survey payload assembly as it is raised for radiation/contamination using site-specific procedures.

SIGN-OFF

2.25.6 If payload is damaged, follow site-specific procedures.

2.25.7 Place payload assembly in designated area.

2.25.8 Supervisor, review/validate and sign Attachment 4.

SIGN-OFF

2.26 Packaging Operational Checks and Examinations

2.26.1 Record OCA serial number on Attachment 5, High-Wattage Empty Packaging Shipment Data Sheet.

SIGN-OFF

2.26.2 Record torque wrench serial numbers and calibration due date on Attachment 5.

SIGN-OFF

2.26.3 Verify packaging maintenance labels are legible and maintenance is current by checking maintenance labels adjacent to name plate and initial Attachment 5.

SIGN-OFF

2.26.4 RCT, **IF** surveys for items in Step 2.27.1, Step 2.28.1, or Step 2.29.1 have been completed previously **AND** results are below contamination limits,
THEN enter applicable data for each step on Attachment 5.

2.26.5 RCT, **IF** surveys have **NOT** been completed previously,
THEN GO TO Subsection 2.27, OCA Lid Inspection and Cleaning; Subsection 2.28, ICV Lid Inspection and Cleaning; or Subsection 2.30, OCA Components Inspection and Cleaning, as applicable.

NOTE

Subsections 2.27 through 2.33, ICV Cavity Inspection (and included steps), must be completed, but may be performed in any order as long as radiological control steps are not bypassed.

2.27 OCA Lid Inspection and Cleaning

2.27.1 RCT, **IF** survey has **NOT** been completed previously,
THEN survey OCV lid interior and exterior and record applicable data on Attachment 5.

SIGN-OFF

2.27.2 Inspect OCA lid for the following:

- Visible deformation
- Dents or abnormal flat spots >1/2 in.
- Abnormal scratches or gouges
- Obvious punctures, tears, or cracks in exposed welds
- Burnout plugs (3) in place and intact
- Lift pocket tubes in place
- Distortions or cracks on or around lifting attachments
- Lift pocket covers attached and serviceable
- OCV locking Z flange screws in place and torque paint unbroken; or, if no torque paint, screws torqued to 22 lb-in.
- Guide plates and screws in place and screws torqued to 21 lb-in., or no looseness in plate and screws recessed.
- Seal surfaces for scratches/gouges perpendicular to machining marks

2.27.3 Remove foreign material from the following:

- Lock ring flange
- Sealing surfaces
- Test port access threads

2.27.4 Verify arrow above seal test port aligns with UNLOCKED arrow on lock ring.

2.27.5 Initial Attachment 5 to document OCA lid components and hardware are satisfactory.

SIGN-OFF

2.28 ICV Lid Inspection and Cleaning

NOTE

O-rings are considered clean when they are absent of free-standing vacuum grease, dirt, debris, and other foreign matter.

2.28.1 RCT, **IF** survey has **NOT** been completed previously, **THEN** survey ICV lid interior and exterior and record applicable data on Attachment 5.

SIGN-OFF

2.28.2 Inspect ICV lid for the following:

- Visible deformation
- Punctures
- Abnormal scratches or gouges
- Distortions on or around lifting attachments
- Upper spacer and screws installed and torque paint unbroken; or, if no torque paint, screws torqued to 10 lb-in.
- Debris shield installed and undamaged
- Lock ring undamaged
- Damaged or missing screws from wiper O-ring holder
- Seal surfaces for scratches/gouges perpendicular to machining marks

2.28.3 Remove foreign material from the following:

- Lock ring flange
- Debris shield
- Sealing surfaces

2.28.4 Remove ICV wiper O-ring.

2.28.5 Clean ICV wiper O-ring and inspect for wear or damage that could impair its function.

2.28.6 **IF** O-ring is damaged, **THEN GO TO** corresponding WI and **RETURN TO** Step 2.28.9.

2.28.7 Lubricate wiper O-ring with a light coat of vacuum grease.

2.28.8 Install wiper O-ring.

2.28.9 Initial Attachment 5 to document ICV lid, components, and hardware are satisfactory.

SIGN-OFF

2.29 OCA Body Inspection and Cleaning

2.29.1 RCT, **IF** survey was **NOT** completed previously, **THEN** survey OCA body exterior and ICV body interior and record applicable data on Attachment 5.

SIGN-OFF

2.29.2 Remove upper and lower main O-rings and set aside for cleaning and inspection.

2.29.3 Inspect OCA body for the following:

- Visible deformation
- Obvious punctures or tears
- Obvious cracks in exposed welds
- Dents or abnormal flat spots >1/2 in.
- Abnormal scratches or gouges
- Burnout plugs (6) in place and undamaged
- Forklift pocket threaded inserts (8) intact and threads undamaged
- Lock bolt threaded inserts (6) intact and threads undamaged
- Tears or fraying >1/4 in. on ceramic fiber gasket
- Lock ring stop(s) undamaged
- Upper and lower O-ring grooves and seal surfaces for scratches/gouges perpendicular to machining marks

2.29.4 Remove foreign material from the following:

- Test port and threads
- Vent port and threads
- Lock ring flange
- Sealing surfaces
- O-ring grooves

2.29.5 Verify airflow through OCV He test ports.

2.29.6 Initial Attachment 5 to document OCA body inspection is satisfactory.

SIGN-OFF

2.30 OCA Components Inspection and Cleaning

NOTE

O-rings are considered clean when they are absent of free-standing vacuum grease, dirt, debris, and other foreign matter.

2.30.1 Clean and inspect the following for wear or damage that could impair their function:

- OCV vent port cover and O-rings
- OCV vent port access plug
- OCV vent port plug and handling O-ring
- OCV seal test port access plug
- OCV seal test port plug and O-ring
- Lock bolts (6)

2.30.2 **IF** components are damaged,
THEN GO TO corresponding WI and **RETURN TO** Step 2.30.4.

2.30.3 Apply a light coat of vacuum grease to the following:

- OCV vent port plug threads
- OCV vent port cover threads and seal O-ring
- OCV seal test port plug threads and seal O-ring

2.30.4 Verify annulus debris seal is installed and undamaged.

2.30.5 Apply a light coat of nickel bearing lubricant to the following:

- OCA lock bolt threads (6)
- OCV seal test port access plug threads
- OCV vent port access plug threads

2.30.6 Clean upper and lower main O-rings and vent port plug seal O-ring, and inspect for damage that could impair containment integrity.

2.30.7 **IF** O-rings are damaged,
THEN GO TO corresponding WI and **RETURN TO** Step 2.30.10.

2.30.8 Lubricate upper and lower main O-rings and vent port plug seal O-ring with a light coat of vacuum grease.

2.30.9 Install upper and lower main O-rings and vent port plug seal O-ring.

2.30.10 Initial Attachment 5 to document OCA component and hardware inspections are satisfactory.

SIGN-OFF

2.31 ICV Body Inspection and Cleaning

2.31.1 Remove upper and lower main O-rings and set aside for cleaning and inspection.

2.31.2 Inspect ICV body for the following:

- Lock ring stop(s) undamaged
- Lock bolt threaded inserts (3) installed and threads undamaged

2.31.3 Remove foreign material from the following:

- Test port threads
- Vent port threads
- O-ring grooves
- Filter ports
- Sealing surfaces
- Lock ring flange

2.31.4 Inspect the following for deformation, scratches, or burrs:

- Upper and lower O-ring grooves and seal surfaces for scratches/gouges perpendicular to machining marks

- Vent port threads

- Seal test port threads

- Lock ring flange

- Lower spacer installed with no punctures in top plate
- Lower spacer screws installed and no detectable gap between screw head and spacer top plate

2.31.5 Verify airflow through ICV He test ports.

2.31.6 Initial Attachment 5 to document ICV body inspection is satisfactory.

SIGN-OFF

2.32 ICV Components Inspection and Cleaning

NOTE

O-rings are considered clean when they are absent of free-standing vacuum grease, dirt, debris, and other foreign matter.

2.32.1 Clean and inspect the following for wear or damage that could impair their function:

- ICV vent port cover and seal
- ICV outer vent port plug
- ICV inner vent port plug and seal O-ring
- ICV seal test port plug and seal O-ring
- ICV lock bolts (3)

2.32.2 **IF** components are damaged,
THEN GO TO corresponding WI and **RETURN TO** Step 2.32.4.

2.32.3 Apply a light coat of vacuum grease to the following:

- ICV vent port cover threads (and O-ring if installed)
- ICV outer vent port plug threads
- ICV inner vent port plug threads and seal O-ring
- ICV seal test port plug threads and seal O-ring

2.32.4 Apply a light coat of nickel bearing lubricant to threads of ICV lock bolts (3).

2.32.5 Clean and inspect upper and lower main O-rings and ICV outer vent port plug seal O-ring for damage that could impair containment integrity.

2.32.6 **IF** O-rings are damaged,
THEN GO TO corresponding WI and **RETURN TO** Step 2.32.9.

2.32.7 Lubricate upper and lower main O-rings and ICV outer vent port plug seal O-ring with a light coat of vacuum grease.

2.32.8 Install upper and lower main O-rings and ICV outer vent port plug seal O-ring.

2.32.9 Initial Attachment 5 to document ICV components and hardware inspections are satisfactory.

SIGN-OFF

2.33 ICV Cavity Inspection

2.33.1 Check ICV cavity for water by visually inspecting the absorbent material inserted into hole in lower spacer assembly.

NOTE

Disposal of absorbent material and water will be at direction of RCT.

2.33.2 **IF** water is inside ICV,
THEN remove water as follows:

- Remove water through center hole of lower spacer assembly using wet/dry vacuum.
- Attach absorbent material to rod and insert in hole in center of lower spacer assembly.

2.33.3 **IF** water is inside ICV,
THEN GO TO Subsection 3.1, perform steps and
RETURN TO Step 2.33.4.

2.33.4 Initial Attachment 5 to document ICV is free of water.

SIGN-OFF

2.33.5 Verify all preshipment inspections are complete and initial Attachment 5.

SIGN-OFF

NOTE

If items are loaded into the ICV, the ACGLF may be used with the long or short legs.

NOTE

If the ACGLF with short legs is used to load items into the ICV, a separate technician shall guide the cables into and out of the ICV to prevent damage to the lower seal flange.

2.33.6 If applicable, load pallets, guide tubes and other items into ICV.

2.34 ICV Lid Installation

2.34.1 Match ICV lid and body serial numbers.

2.34.2 Record ICV serial number on Attachment 5.

SIGN-OFF

CAUTION

Operator shall verify two ACGLF counterweights are at 180 degrees and 000 degrees (± 2 degrees) **BEFORE** lifting ACGLF or lid.

2.34.3 Attach ACGLF to ICV lid.

2.34.4 Align UNLOCKED arrows and install ICV lid onto ICV body using crane and ACGLF.

2.34.5 Install ICV vent port tool into ICV vent port.

2.34.6 Connect vacuum line to ICV vent port tool.

2.34.7 Start vacuum pump and evacuate to 3 to 15 in. Hg vacuum gauge.

2.34.8 Rotate ICV lock ring to LOCKED position.

2.34.9 Stop vacuum pump.

2.34.10 Disconnect vacuum line from vent port tool.

2.34.11 Remove ICV vent port tool.

2.34.12 Let ICV vent to atmosphere.

2.34.13 Install and torque the following components:

- ICV inner vent port plug; torque to 55 to 65 lb-in.
- ICV seal test port plug; torque to 55 to 65 lb-in.
- OCV seal test port plug; torque to 55 to 65 lb-in.
- ICV lock bolts (3); torque to 28 to 32 lb-ft.

2.34.14 Install ICV outer vent port plug; torque to 55 to 65 lb-in.

2.34.15 Install ICV vent port cover; torque to 55 to 65 lb-in.

2.34.16 Initial on Attachment 5 that ICV hardware and OCV seal test port plug are torqued within designated range.

SIGN-OFF

2.35 OCA Lid Installation

2.35.1 Match OCA lid and body serial numbers.

2.35.2 Record OCA serial number on Attachment 5.

SIGN-OFF

CAUTION

Operator shall verify two ACGLF counterweights are at 180 degrees and 000 degrees (± 2 degrees) **BEFORE** lifting ACGLF or lid.

2.35.3 Attach ACGLF to OCA lid.

2.35.4 Align UNLOCKED arrows and install OCA lid onto OCA body.

2.35.5 Install OCV vent port tool into OCV vent port.

2.35.6 Connect vacuum line to OCV vent port tool.

2.35.7 Start vacuum pump and evacuate to 3 to 15 in. Hg vacuum gauge.

2.35.8 Rotate OCV lock ring to LOCKED position.

2.35.9 Stop vacuum pump.

2.35.10 Disconnect vacuum line from vent port tool.

2.35.11 Remove OCV vent port tool.

2.35.12 Let OCV vent to atmosphere.

2.35.13 Install OCV vent port plug; torque to 55 to 65 lb-in.

2.35.14 Install OCV vent port cover; torque to 55 to 65 lb-in.

2.35.15 Install the following:

- OCV seal test port thermal plug and access plug; torque access plug to 35 to 45 lb-ft.
- OCV vent port thermal plug and access plug; torque access plug to 35 to 45 lb-ft.
- OCA lock bolts (6); torque to 28 to 32 lb-ft.
- OCA lift pocket covers.

2.35.16 Initial on Attachment 5 that OCV/OCA hardware is torqued within designated range.

SIGN-OFF

2.35.17 Verify preshipment preparations are complete and unit is ready for transport and initial Attachment 5.

SIGN-OFF

2.35.18 Supervisor, review/validate and sign Attachment 5.

SIGN-OFF

2.36 Installation of Packaging onto Transport Trailer

NOTE

When loading packages on trailer, or loading payload into packaging that is already on trailer, the following applies:

- Packages having a gross weight difference (heaviest to lightest) of 2,000 lb or less can be considered equal and do not require a specific sequence for positioning on the trailer.

- Packages having a gross weight difference (heaviest to lightest), greater than 2,000 lb shall be positioned on the trailer as follows:

TRAILER FRONT	*1. Heaviest	Medium	Lightest	*TRAILER REAR*
	2. Heaviest	Lightest	Medium	
	*3. Heaviest	Lightest	None	
	4. Lightest	Heaviest	None	
	5. Heaviest	None	None	

* Preferred method

2.36.1 Record the following on Attachment 6, High-Wattage Trailer Data Sheet:

- Shipment number
- Trailer number
- Packaging number(s)

SIGN-OFF

2.36.2 Verify annual trailer inspection is current.

2.36.3 Record trailer inspection performed date on Attachment 6.

SIGN-OFF

NOTE

Additional trailer tie-down guidance is provided in WP 08-PT.04. This document is available on the Internet at http://www.wipp.ws/library/caolib.htm#containers.

2.36.4 Inspect tie-downs for the following:

- Damage
- Defects

2.36.5 **IF** TRUPACT-II was removed for unloading operations, **THEN** perform the following:

[A] Position transport trailer in designated area.

[B] Lower trailer jacks (landing gear) ensuring trailer is level.

[C] Install wheel chocks.

[D] Install jack stands on freestanding trailers.

CAUTION

Tip-back beyond level may damage package exterior surface.

[E] Transport packaging to transport trailer.

[F] Load packaging designated for position #1 onto trailer with vent port on driver side of trailer.

[G] If applicable, load packaging designated for position #2 onto trailer with vent port on driver side of trailer.

[H] If applicable, load packaging designated for position #3 onto trailer with vent port on driver side of trailer.

NOTE

Additional trailer tie-down guidance is provided in WP 08-PT.04. This document is available on the Internet at http://www.wipp.ws/library/caolib.htm#containers.

[I] Install four tie-down assemblies for each packaging loaded on trailer.

[J] Install packaging forklift pocket access covers.

2.36.6 Record packaging serial number(s) and weights on Attachment 6.

SIGN-OFF

2.36.7 Record total weight of all loaded packaging as payload weight on Attachment 6.

SIGN-OFF

2.36.8 Verify shipment is in compliance with 49 CFR Part 172, Subpart D and Subpart E, and initial Attachment 6.

SIGN-OFF

2.36.9 Complete information transfer to shipping documents as required for the specific shipment.

2.36.10 Verify shipping papers are complete, and initial Attachment 6.

SIGN-OFF

2.36.11 Initial for trailer loading complete on Attachment 6.

SIGN-OFF

2.36.12 Supervisor, review/validate entries and sign Attachment 6.

SIGN-OFF

Figure 2.1 - Evacuation/Inert Gas Backfill

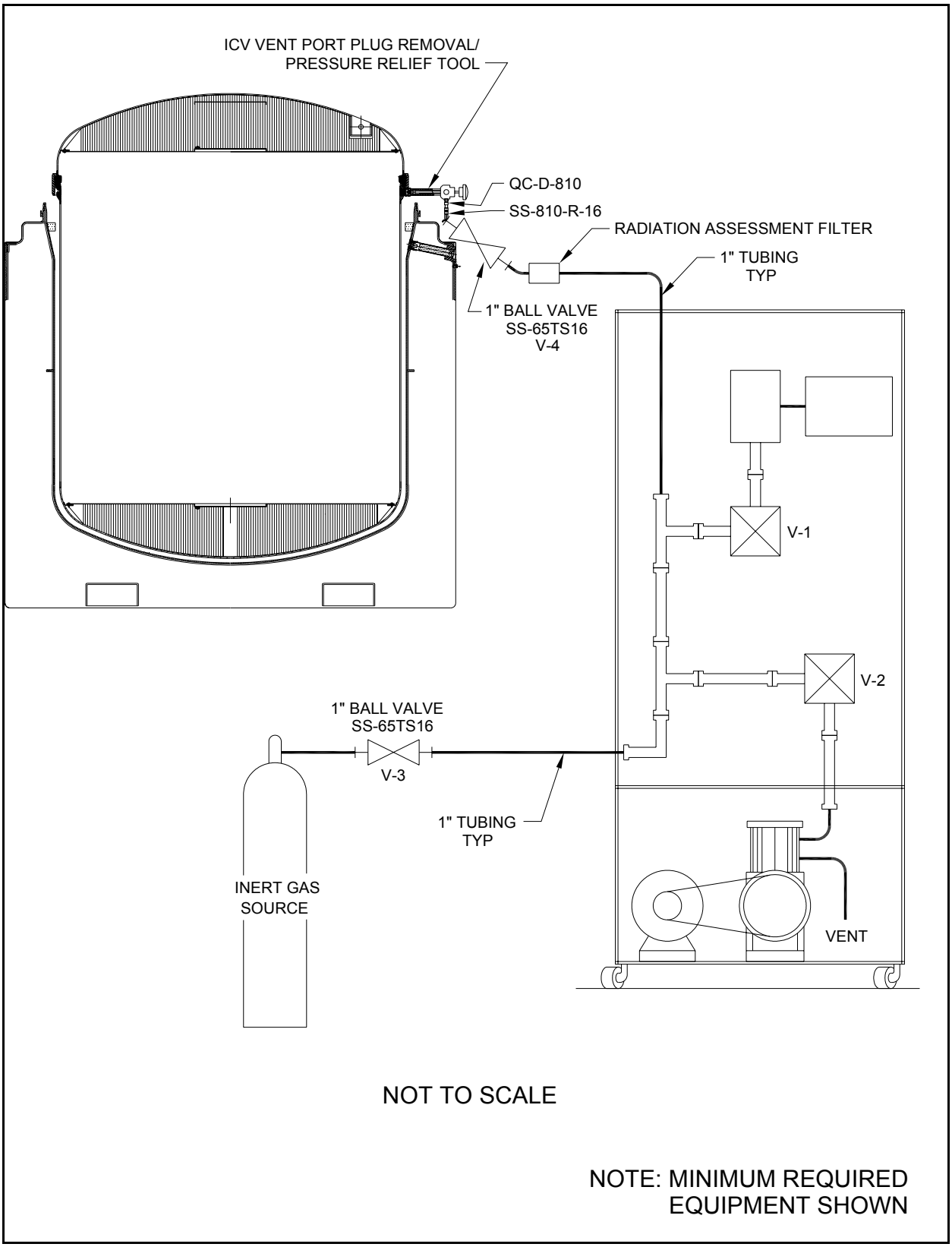

3.0 ABNORMAL OPERATIONS

NOTE

WIPP Packaging Maintenance Engineer shall be contacted when performing Sections 3.1, 3.2, or 3.3.

3.1 Empty ICV Assembly Removal - (if water found in ICV or annual maintenance only)

3.1.1 Verify ICV lid has been installed and locked.

3.1.2 Mark ICV and OCA with match lines using a low-chloride marker. (These marks will be used to orient the ICV in the OCV during reinstallation.)

CAUTION

Operator shall verify two ACGLF counterweights are at 180 degrees and 000 (± 2 degrees) degrees respectively.

3.1.3 Attach ACGLF to ICV lid.

3.1.4 If annulus debris seal is present, remove and set aside for later use.

CAUTION

Load cell reading **MUST NOT** exceed 5,000 lb when weight of ACGLF is zeroed out, **OR** 7,500 lb when weight of ACGLF is included.

3.1.5 Remove empty ICV assembly from OCV body using crane and ACGLF.

NOTE

If required by site-specific policy to ensure personnel safety, RCT shall survey OCV interior for radiation/contamination **BEFORE** initiating OCV inspection process.

3.1.6 Inspect visually for presence of water in bottom of OCV.

3.1.7 If freestanding water is **NOT** observed in bottom of OCV body, **GO TO** Step 3.1.11.

CAUTION

Operator shall obtain protective clothing and equipment in accordance with site Safety Manual before entering OCV cavity. Operator also shall enter the OCV cavity using precautions to preclude damage to OCV body sealing flange.

3.1.8 Use wet/dry vacuum and/or absorbent materials to remove freestanding water.

NOTE

Cleaning and waste materials shall be managed according to site waste management procedures.

3.1.9 Remove equipment and exit OCV cavity using precautions not to damage OCV body sealing flange.

3.1.10 Verify OCV is free of standing water.

CAUTION

Operator shall verify two ACGLF counterweights are at 180 degrees and 000 (± 2 degrees) degrees respectively.

NOTE

When Step 3.1.11 is complete, ICV vent port should be within 1 ft of OCV vent port and the ICV should be sitting vertically within the OCV (i.e., not leaning to the side).

3.1.11 Reinstall ICV assembly into OCV body using crane and ACGLF.

3.1.12 If annulus debris seal was removed in Step 3.1.4, reinstall annulus debris seal.

3.2 Using Heat Guns to Remove Stuck Lids

3.2.1 Heat ICV or OCV lid O-rings (as necessary) for up to 1 hour using heat guns.

CAUTION

Operator shall verify two ACGLF counterweights are at 180 degrees and 000 (± 2 degrees) degrees respectively.

CAUTION

When lifting ICV lid, load cell reading **MUST NOT** exceed 5,000 lb when weight of ACGLF is zeroed out, **OR** 7,500 lb when weight of ACGLF is included.

CAUTION

When lifting OCA lid, load cell reading **MUST NOT** exceed 7,500 lb when weight of ACGLF is zeroed out, **OR** 10,000 lb when weight of ACGLF is included.

3.2.2 Attempt to raise lid using the slowest possible speed.

3.2.3 Raise lid as directed by RCT and **RETURN TO** normal operations.

3.3 Pressurizing with Nitrogen or Compressed Air to Remove Stuck Lids

3.3.1 Obtain the following:

- Nitrogen bottle with ≥ 500 lb pressure or other air source capable of being regulated in 1-psi increments
- Pressure Assembly (Figure 3.1, Flow Diagram for Nitrogen Bottle/Compressed Air ICV/OCA Lid Pressurization)
- If not already installed, ICV/OCV vent port tools, as applicable

3.3.2 Perform the following for compressed air or nitrogen:

[A] Assemble Pressure Assembly (see Figure 3.1 for example of a pressure assembly).

[B] If not already installed, install vent port tool hand-tight.

[C] Connect Pressure Assembly to quick disconnect on vent port tool.

[D] Close valve V-1.

[E] Close valve V-2.

[F] Verify supply valve is closed.

[G] Verify back pressure relief valve is fully backed-off.

[H] Verify pressure regulator is fully backed off.

[I] Connect supply line and regulator to nitrogen-bottle or compressed air source.

[J] Open supply valve and adjust N_2 or air supply regulator to a maximum of 150 psig.

[K] Adjust R1 to about 2.1 psig.

[L] Adjust R2 until it begins to relieve pressure.

[M] Adjust R1 to fully backed off.

[N] Bleed briefly through V-1.

[O] Adjust R1 to about 1 psig.

3.3.3 Verify counterweights are at 180 degrees and 000 degrees.

WARNING

The ICV or OCV should not be pressurized above 2 psi to avoid personnel injury. A loaded ICV **MUST NOT** be pressurized unless precautions are taken to prevent possible contamination when lid is raised.

CAUTION

When lifting ICV lid, load cell reading **MUST NOT** exceed 5,000 lb when weight of ACGLF is zeroed out, **OR** 7,500 lb when weight of ACGLF is included.

CAUTION

When lifting OCV lid, load cell reading **MUST NOT** exceed 7,500 lb when weight of ACGLF is zeroed out, **OR** 10,000 lb when weight of ACGLF is included.

3.3.4 Attempt to lift lid using crane at the slowest rate possible while monitoring load cell.

3.3.5 Perform the following while attempting to lift lid with crane:

[A] Throttle valve V-2, keeping pressure ≤ 2 psi.

[B] When lid becomes loose, close V-2.

[C] Close supply valve.

[D] Open V-1 to depressurize assembly.

[E] Disconnect supply line from pressure assembly.

[F] Disconnect pressure assembly from vent port tool.

[G] Disconnect vent port tool and survey tool if applicable.

[H] Disconnect supply line and regulator from nitrogen bottle or compressed air source.

3.3.6 Raise lid as directed by RCT **AND** continue with normal operations.

3.3.7 **IF** after pressurizing to 2 psi lid still does not lift,
THEN contact the WIPP M&O Contractor CH Packaging Maintenance Engineer.

3.4 Venting

NOTE

In the event a sealed package cannot be shipped within the time frame set forth in the TRUPACT-II Packaging SAR, the package must be vented.

3.4.1 **IF** venting is required,
THEN perform applicable Subsections 2.23, OCA Lid Removal; and 2.24, ICV Lid Removal.

3.4.2 Wait three minutes.

3.4.3 **GO TO** Subsection 2.17, reinstall lids using Subsections 2.17 and 2.19.

Figure 3.1 - Flow Diagram for Nitrogen Bottle/Compressed Air ICV/OCA Lid Pressurization

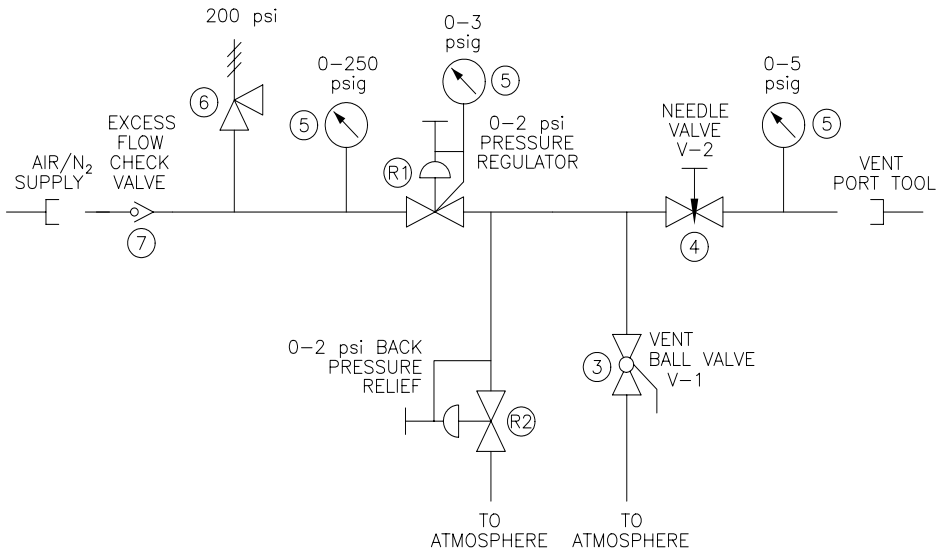

ITEM #	DESCRIPTION
R1	0–3 psi PRESSURE REGULATOR TO ATMOSPHERE (RATED FOR 250 psi INPUT MINIMUM)
R2	0–2 psi BACK PRESSURE RELIEF TO PROCESS PRESSURE (RATED FOR 250 psi INPUT MINIMUM WITH A THREADED REF. PORT)
3	3/8" BALL VALVE
4	3/8" NEEDLE VALVE
5	PRESSURE GAGE
6	3/8" PRESSURE RELIEF VALVE
7	1/4" EXCESS FLOW CHECK VALVE
AR	3/8" TUBING
AR	PIPE/TUBING, ADAPTERS & FITTINGS

4.0 PRESHIPMENT LEAKAGE RATE TESTING

4.1 Basic Information

4.1.1 Introduction - This procedure provides instructions for performing ICV and OCV preshipment leakage rate tests on the following packaging seals, using a nondestructive He leak test:

- ICV upper main O-ring seal
- ICV outer vent port plug seal O-ring
- OCV upper main O-ring seal
- OCV vent port plug seal O-ring

4.1.2 References

- U.S. Department of Energy, *Safety Analysis Report for the TRUPACT-II Shipping Package*
- DOE/WIPP 02-3183, *CH Packaging Program Guidance*
- DOE/WIPP 02-3185, *CH Packaging Maintenance Manual*
- ANSI N 14.5, 1997, *Radioactive Materials Leakage Tests on Packages for Shipment*
- ASNT, *Recommended Practice No. SNT-TC-1A*, June 1980
- WP 13-RP.01, Test Report for WP 13-QA1082 Procedure Qualification

4.1.3 Equipment

MEASURING AND TEST EQUIPMENT

- Varian 938-41 or 959 Helium Leak Detector with 7 to 14 cfm mechanical vacuum pump
- Roughing pump
- He leak standard for calibrating leak detector
- Pressure/vacuum gauge, 30-in. Hg to 30 psig
- Temperature measuring device, 32°F to 120°F (0°C to 50°C)
- Ambient atmospheric pressure measuring device

- Watch or stopwatch, digital or sweep second hand (no calibration required)
- Torque wrench with 10 to 65 lb-in range
- Torque wrench with 30 to 50 lb-ft range

SPECIAL TEST EQUIPMENT

- ICV/OCV vent port plug removal/pressure relief tools
- ICV/OCV vent port plug/cover removal and installation tools
- ICV/OCV seal leak check tools
- ICV/OCV leak detection tools
- Miscellaneous hardware and test connections

CONSUMABLE MATERIALS

- Welding grade He (with certificate of conformance)
- Argon or nitrogen (purge gas)

4.1.4 Precautions and Limitations

The following leak test procedure may be used, or each user may develop and qualify a procedure in accordance with the guidelines of ANSI N14.5, 1997. Sites that opt to qualify their own leak test procedure must submit procedure qualification record and procedure to Site Documents@wipp.ws, for approval.

- Leak testing of CH packaging shall be performed by personnel qualified in accordance with the American Society for Nondestructive Testing Practice No. SNT-TC-1A, June 1980 edition and supplement.
- This procedure is qualified per WP 13-RP.01, Test Report for WP 13-QA1082 Procedure Qualification for the Varian 938-41 and 959 MSLD and test line configuration defined in that report. CH packaging users adopting this leak test must not deviate from the test configuration(s) used to qualify the procedure.
- The He leak detector shall be calibrated to a minimum sensitivity of 1.3×10^{-7} standard cubic centimeters per second (scc/s) He.

- The leakage rate acceptance criteria of $\leq 1.0\times10^{-7}$ scc/s of air equates to a leakage rate of $\leq 2.6\times10^{-7}$ scc/s He. The He leakage rate is only valid for a component of $\geq 4.4°C$. The acceptable He leakage rate increases with temperature, but as a conservative measure, an acceptance criteria of $\leq 2.6\times10^{-7}$ scc/s He will be used.

4.1.5 Prerequisite Actions

- Verify air flow through leak check and leak detection tools.

- Verify packaging surface is free of contaminates that might mask a leak. The interior and exterior surfaces shall be dry.

4.2 ICV Upper Main O-Ring Seal

4.2.1 Record the following on Attachment 7, ICV Preshipment Leakage-Rate Test Data Sheet:

- ICV body serial number (S/N)
- ICV lid S/N
- Date of leak test
- He leak detector S/N and model
- Pressure/vacuum gauge S/N and calibration due date
- Thermometer S/N and calibration due date
- Torque wrench S/Ns and calibration due dates
- Standard leak S/N and calibration due date
- Barometer S/N and calibration due date
- He source connected to backfill system

SIGN-OFF

NOTE

Steps 4.2.15 through 4.2.19 may be performed in parallel with Steps 4.2.2 through 4.2.14.

4.2.2 Measure ICV surface temperature.

4.2.3 If temperature is less than 4.4°C, stop test until surface temperature $\geq 4.4°C$.

4.2.4 Record ICV surface temperature on Attachment 7.

SIGN-OFF

4.2.5 Verify outer vent port plug is retracted into ICV vent port plug removal/pressure relief tool.

4.2.6 Install ICV vent port tool into ICV vent port.

4.2.7 Attach vacuum pump assembly and He gas supply to vent port tool (see Figure 4.1, ICV Main O-Ring Seal Test).

4.2.8 Open isolation valve to vacuum pump.

4.2.9 Start vacuum pump.

4.2.10 Record ambient atmospheric pressure (Patm) on Attachment 7.

SIGN-OFF

4.2.11 Evacuate ICV vent port cavity to 90% vacuum (90% of atmospheric pressure) or better.

4.2.12 Record vacuum reading (V1) on Attachment 7.

SIGN-OFF

4.2.13 Calculate He concentration correction factor (CCF) as follows:

$$CCF = \frac{Patm}{V1}$$

4.2.14 Record CCF on Attachment 7.

SIGN-OFF

4.2.15 Perform pretest calibration of leak detector (to the temperature-corrected standard leak value) and record results on Attachment 7.

SIGN-OFF

4.2.16 Install ICV seal leak check tool in ICV seal test port.

4.2.17 Connect leak detector to ICV leak check tool (see Figure 4.1).

4.2.18 Verify isolation valve open.

4.2.19 Evacuate space between O-ring seals through ICV seal test port.

4.2.20 Close vacuum pump isolation valve **AND** stop vacuum pump.

NOTE

To measure a $\leq 2.6\times10^{-7}$ scc/s He leakage rate, the indicated He background will be allowed to stabilize at 7×10^{-7} scc/s He or less and remain below the limit for a minimum of 3 minutes.

4.2.21 Record He background (RB) on Attachment 7.

SIGN-OFF

4.2.22 Open He valve and backfill cavity with He to a pressure slightly greater than atmospheric pressure (+1 psi, -0 psi).

4.2.23 Close He valve.

4.2.24 Record backfill pressure reading on Attachment 7.

SIGN-OFF

4.2.25 Begin timing for 3-minute dwell time.

4.2.26 Monitor pressure gauge and add He as required to maintain He atmosphere in the cavity.

NOTE

A dwell time of 3 minutes will be used to determine leakage rate of ICV upper main O-ring seal.

4.2.27 Record displayed He reading (RT) after 3-minute dwell time on Attachment 7.

SIGN-OFF

NOTE

Steps 4.3.1 through 4.3.6 may be performed in parallel with Steps 4.2.28 through 4.2.35.

4.2.28 Remove test assembly from leak detector.

4.2.29 Install calibrated leak to leak detector.

4.2.30 Perform post-test calibration deviation check of leak detector and record results on Attachment 7.

SIGN-OFF

4.2.31 Calculate the ICV upper main O-ring seal leakage rate using the correct condition below and record on Attachment 7:

NOTE

If the He background (RB) is greater than the displayed He reading at the end of dwell time (RT), the value of (RT) will be substituted for the value of (RB) when performing leak rate calculations. If condition [C] applies, and this note is applicable to that condition (ending up with a negative number), zero will be used as the leakage rate.

NOTE

The difference between displayed He reading (DR) with standard leak installed, including Zero Reading Variance (if applicable) and Temperature Correction Value (TC), is used to determine post-test calibration deviation. Additional guidance is provided in DOE/WIPP 02-3183, Section 4.2.9.

[A] If there is no difference in the Temperature Correction Value (TC) from the displayed He reading with standard leak installed (DR), use the following equation: subtract the He background at the start of test (RB) from the displayed He reading at end of test (RT). The leakage rate is (RT – RB) × CCF. This equals the leakage rate for this segment of the test.

[B] If Temperature Correction Value (TC) is **LESS** than the displayed He reading with standard leak installed (DR), use the following calculation: (RT + calibration deviation – RB) × CCF. This equals the leakage rate for this segment of the test under this condition of recalibration.

[C] If Temperature Correction Value (TC) is **MORE** than the displayed He reading with standard leak installed (DR), use the following calculation: (RT - calibration deviation – RB) × CCF. This equals the leakage rate for this segment of the test under this condition of recalibration.

SIGN-OFF

4.2.32 If the acceptance criterion is satisfied ($\leq 2.6\times10^{-7}$ scc/s of He), this segment of the test procedure is complete.

NOTE

The leakage rate acceptance criterion is $\leq 2.6\times10^{-7}$ scc/s He.

4.2.33 **IF** ICV upper main O-ring seal leakage rate is $> 2.6\times10^{-7}$ scc/s He, **THEN** perform the following:

[A] Isolate leak path.

[B] **GO TO** WI-CH.02, replace O-ring seal(s) and/or repair seal surface(s) per WI-CH.12; repeat leak test.

[C] If after repeated testing it is apparent the seal cannot pass the test, prepare nonconformance report (NCR) and record on Attachment 7.

SIGN-OFF

4.2.34 Remove ICV seal leak check tool and associated leak test equipment from ICV seal test port.

4.2.35 Install ICV seal test port plug.

4.2.36 Torque ICV seal test port plug to 55 to 65 lb-in. and record on Attachment 7.

SIGN-OFF

4.3 ICV Outer Vent Port Plug Seal O-Ring

NOTE

The following test should be performed immediately after Subsection 4.2, ICV Upper Main O-Ring Seal, while the He atmosphere is still present in the ICV vent port cavity and to minimize He saturation of O-rings before test completion.

4.3.1 Disconnect vacuum pump assembly and He supply from ICV vent port tool.

4.3.2 Install ICV outer vent port plug.

4.3.3 Remove vent port tool.

4.3.4 Torque ICV outer vent port plug to 55 to 65 lb-in and record on Attachment 7.

SIGN-OFF

4.3.5 Purge vent port to flush out residual He.

4.3.6 Install a clean ICV leak detection tool in ICV vent port.

NOTE

If Step 4.3.7 begins within 1 hour of completing the ICV upper main O-ring seal leak test, **THEN** the pretest calibration is not required. The post-test calibration result can be used for the ICV outer vent port plug O-ring seal pretest calibration, provided no post-test calibration deviation was recorded.

4.3.7 Perform pretest calibration of leak detector (to the temperature-corrected standard leak value).

4.3.8 Record pretest calibration results on Attachment 7.

SIGN-OFF

4.3.9 Connect leak detector to ICV leak detection tool (see Figure 4.2, ICV Outer Vent Port Plug Seal O-Ring Test).

4.3.10 Verify isolation valve is **OPEN**.

4.3.11 Evacuate ICV leak detection tool.

NOTE

To measure a $\leq 2.6\times10^{-7}$ scc/s He leakage rate with a He atmosphere already present, indicated He background will be $\leq 2.6\times10^{-7}$ scc/s He **BEFORE** the start of the dwell time.

Dwell time for ICV outer vent port plug seal O-ring test is 3 minutes. An initial indication does **NOT** necessarily indicate a leak. Some residual He may still be detected.

4.3.12 Record displayed He reading (RT) after 3-minute dwell time on Attachment 7.

SIGN-OFF

4.3.13 Remove test assembly from leak detector.

4.3.14 Install calibrated leak to leak detector.

4.3.15 Perform post-test calibration deviation check of leak detector and record results on Attachment 7.

SIGN-OFF

4.3.16 Calculate ICV outer vent port plug seal O-ring leakage rate using the appropriate condition below and record on Attachment 7:

NOTE

The difference between displayed He reading (DR) with standard leak installed, including Zero Reading Variance (if applicable) and Temperature Correction Value (TC), is used to determine post-test calibration deviation. Additional guidance is provided in DOE/WIPP 02-3183, Section 4.2.9.

[A] If there is no difference in the Temperature Correction Value (TC) from the displayed He reading with standard leak installed (DR), the displayed He reading at end of test (RT) × CCF equals the leakage rate for this segment of the test.

[B] If Temperature Correction Value (TC) is **LESS** than the displayed He reading with standard leak installed (DR), use the following calculation: (RT + calibration deviation) × CCF. This equals the leakage rate for this segment of the test under this condition of recalibration.

[C] If Temperature Correction Value (TC) is **MORE** than the displayed He reading with standard leak installed (DR), use the following calculation: (RT - calibration deviation) × CCF. This equals the leakage rate for this segment of the test under this condition of recalibration.

SIGN-OFF

4.3.17 If the acceptance criterion is satisfied ($\leq 2.6\times10^{-7}$ scc/s of He), this segment of the test procedure is complete.

NOTE

The leakage rate acceptance criterion is $\leq 2.6\times10^{-7}$ scc/s He.

4.3.18 **IF** ICV outer vent port plug seal O-ring leakage rate is $> 2.6\times10^{-7}$ scc/s He,
THEN perform the following:

[A] Isolate leak path.

[B] **GO TO** WI-CH.01, replace O-ring seal(s) and/or repair seal surface(s) per WI-CH.12, repeat leak test.

[C] If after repeated testing it is apparent the seal cannot pass test, prepare NCR and record on Attachment 7.

SIGN-OFF

4.3.19 Remove ICV leak detection tool from ICV vent port.

4.3.20 Install ICV vent port cover.

4.3.21 Torque ICV vent port cover to 55 to 65 lb-in. and initial Attachment 7.

SIGN-OFF

4.3.22 **RETURN TO** Step 2.18.18.

4.4 OCV Upper Main O-Ring Seal

4.4.1 Record the following on Attachment 8, OCV Preshipment Leakage Rate Test Data Sheet:

- OCV body S/N
- OCV lid S/N
- Date of leak test
- He leak detector S/N and model
- Pressure/vacuum gauge S/N and calibration due date
- Thermometer S/N and calibration due date
- Torque wrench S/Ns and calibration due dates
- Standard leak S/N and calibration due date
- Barometer S/N and calibration due date
- He source connected to backfill system

SIGN-OFF

NOTE

Steps 4.4.12 through 4.4.17 may be performed in parallel with Steps 4.4.2 through 4.4.11.

4.4.2 Measure OCV surface temperature and record on Attachment 8.

SIGN-OFF

4.4.3 If temperature is less than 4.4°C, stop test until surface temperature ≥ 4.4°C.

4.4.4 Attach vacuum pump assembly and He gas supply to vent port tool (see Figure 4.3).

4.4.5 Open isolation valve to vacuum pump.

4.4.6 Start vacuum pump.

4.4.7 Record ambient atmospheric pressure (Patm) on Attachment 8.

SIGN-OFF

4.4.8 Evacuate OCV cavity to 90% vacuum (90% of atmospheric pressure) or better.

4.4.9 Record vacuum reading (V1) on Attachment 8.

SIGN-OFF

4.4.10 Calculate He concentration correction factor as follows:

$$CCF = \frac{Patm}{V1}$$

4.4.11 Record CCF on Attachment 8.

SIGN-OFF

4.4.12 Perform pretest calibration of leak detector (to the temperature-corrected standard leak value).

4.4.13 Record pretest calibration results on Attachment 8.

SIGN-OFF

4.4.14 Install OCV seal leak check tool in OCV seal test port.

4.4.15 Connect leak detector to OCV leak check tool (see Figure 4.3, OCV Main O-Ring Seal Test).

4.4.16 Verify isolation valve open.

4.4.17 Evacuate space between O-ring seals through OCV seal test port.

4.4.18 Close vacuum pump isolation valve **AND** stop vacuum pump.

NOTE

To measure a 2.6×10^{-7} scc/s He leakage rate, the indicated He background will be allowed to stabilize at $\leq 7\times10^{-7}$ scc/s He and remain below the limit for a minimum of 3 minutes.

4.4.19 Record He background (RB) on Attachment 8.

SIGN-OFF

4.4.20 Open He valve and backfill OCV cavity with He to a pressure slightly greater than atmospheric pressure (+1 psi, -0 psi).

4.4.21 Close He valve.

4.4.22 Record backfill pressure reading on Attachment 8.

SIGN-OFF

4.4.23 Begin timing for 3-minute dwell time.

4.4.24 Monitor pressure gauge and add He as required to maintain He atmosphere in the cavity.

NOTE

A dwell time of 3 minutes will be used to determine leakage rate of OCV upper main O-ring seal.

4.4.25 Record displayed He reading (RT) after 3-minute dwell time on Attachment 8.

SIGN-OFF

NOTE

Steps 4.5.1 through 4.5.6 may be performed in parallel with Steps 4.4.26 through 4.4.34.

4.4.26 Remove test assembly from leak detector.

4.4.27 Install calibrated leak to leak detector.

4.4.28 Perform post-test calibration deviation check of leak detector and record results on Attachment 8.

SIGN-OFF

4.4.29 Calculate OCV main O-ring seal leakage rate using the appropriate condition below and record on Attachment 8:

NOTE

If the He background (RB) is greater than the displayed He reading at the end of dwell time (RT), the value of (RT) will be substituted for the value of (RB) when performing leak rate calculations. If condition [C] applies, and this note is applicable to that condition (ending up with a negative number), zero will be used as the leakage rate.

NOTE

The difference between displayed He reading (DR) with standard leak installed, including Zero Reading Variance (if applicable) and Temperature Correction Value (TC), is used to determine post-test calibration deviation. Additional guidance is provided in DOE/WIPP 02-3183, Section 4.2.9.

[A] If there is no difference in the Temperature Correction Value (TC) from the displayed He reading with standard leak installed (DR), use the following equation: subtract the He background at the start of test (RB) from the displayed He reading at end of test (RT). The leakage rate is (RT – RB) × CCF. This equals the leakage rate for this segment of the test.

[B] If Temperature Correction Value (TC) is **LESS** than the displayed He reading with standard leak installed (DR), use the following calculation: (RT + calibration deviation – RB) × CCF. This equals the leakage rate for this segment of the test under this condition of recalibration.

[C] If Temperature Correction Value (TC) is **MORE** than the displayed He reading with standard leak installed (DR), use the following calculation: (RT - calibration deviation – RB) × CCF. This equals the leakage rate for this segment of the test under this condition of recalibration.

SIGN-OFF

4.4.30 If acceptance criterion is satisfied ($\leq 2.6\times10^{-7}$ scc/s of He), this segment of the test procedure is complete.

NOTE

The leakage rate acceptance criterion is $\leq 2.6\times10^{-7}$ scc/s He.

4.4.31 **IF** OCV main O-ring seal leakage rate is $>2.6\times10^{-7}$ scc/s He, **THEN** perform the following:

[A] Isolate leak path.

[B] **GO TO** WI-CH.02, replace O-ring seal(s) and/or repair seal surface(s) per WI-CH.12, and repeat leak test.

[C] If after repeated testing it is apparent the seal cannot pass test, prepare NCR and record on Attachment 8.

SIGN-OFF

4.4.32 Remove OCV seal leak check tool and associated leak test equipment from OCV seal test port.

4.4.33 Install OCV seal test port plug.

4.4.34 Torque OCV seal test port plug to 55 to 65 lb-in and record on Attachment 8.

SIGN-OFF

4.5 OCV Vent Port Plug Seal O-Ring

NOTE

The following test should be performed immediately after Subsection 4.4, OCV Upper Main O-Ring Seal, while the He atmosphere is still present in the OCV cavity and to minimize He saturation of the O-rings before test completion.

4.5.1 Disconnect vacuum pump assembly and He supply from OCV vent port tool.

4.5.2 Install OCV vent port plug.

4.5.3 Remove vent port tool.

4.5.4 Torque OCV vent port plug to 55 to 65 lb-in. and record on Attachment 8.

SIGN-OFF

4.5.5 Purge vent port to flush out residual He.

4.5.6 Install a clean OCV leak detection tool in OCV vent port.

NOTE

If Step 4.5.7 begins within 1 hour of completing the OCV upper main O-ring seal leak test, **THEN** the pretest calibration is not required. The post-test calibration result can be used for the OCV outer vent port plug O-ring seal pretest calibration, provided no post-test calibration deviation was recorded.

4.5.7 Perform pretest calibration of leak detector (to the temperature-corrected standard leak value).

4.5.8 Record pretest calibration results on Attachment 8.

SIGN-OFF

4.5.9 Connect leak detector to OCV leak detection tool (see Figure 4.4, OCV Vent Port Plug O-Ring Seal Test).

4.5.10 Verify isolation valve is **OPEN**.

4.5.11 Evacuate OCV leak detection tool.

NOTE

To measure a $\leq 2.6\times10^{-7}$ scc/s He leakage rate with a He atmosphere already present, the indicated He background will be $\leq 2.6\times10^{-7}$ scc/s He before the start of the dwell time.

Dwell time for OCV vent port plug seal O-ring test is 3 minutes. An initial indication does **NOT** necessarily indicate a leak. Some residual He may still be detected.

4.5.12 Record displayed He reading (RT) after 3-minute dwell time on Attachment 8.

SIGN-OFF

4.5.13 Remove test assembly from leak detector.

4.5.14 Install calibrated leak to leak detector.

4.5.15 Perform post-test calibration deviation check of leak detector and record results on Attachment 8.

SIGN-OFF

4.5.16 Calculate OCV vent port plug seal O-ring leakage rate using the appropriate condition below and record on Attachment 8:

NOTE

The difference between displayed He reading (DR) with standard leak installed, including Zero Reading Variance (if applicable) and Temperature Correction Value (TC), is used to determine post-test calibration deviation. Additional guidance is provided in DOE/WIPP 02-3183, Section 4.2.9.

[A] If there is no difference in the Temperature Correction Value (TC) from the displayed He reading with standard leak installed (DR), the displayed He reading at end of test (RT) × CCF equals the leakage rate for this segment of the test.

[B] If Temperature Correction Value (TC) is **LESS** than the displayed He reading with standard leak installed (DR), use the following calculation: (RT + calibration deviation) × CCF. This equals the leakage rate for this segment of the test under this condition of recalibration.

[C] If Temperature Correction Value (TC) is **MORE** than the displayed He reading with standard leak installed (DR), use the following calculation: (RT – calibration deviation) × CCF. This equals the leakage rate for this segment of the test under this condition of recalibration.

SIGN-OFF

4.5.17 If acceptance criterion is satisfied ($\leq 2.6\times10^{-7}$ scc/s of He), this segment of the test procedure is complete.

NOTE

The leakage rate acceptance criterion is $\leq 2.6\times10^{-7}$ scc/s He.

4.5.18 **IF** OCV vent port plug seal O-ring leakage rate is **>** 2.6×10^{-7} scc/s He,
THEN perform the following:

[A] Isolate leak path.

[B] **GO TO** WI-CH.01, replace O-ring seal(s) and/or repair seal surface(s) per WI-CH.12, and repeat leak test.

[C] If after repeated testing it is apparent the seal cannot pass test, prepare NCR and record on Attachment 8.

SIGN-OFF

4.5.19 Remove OCV leak detection tool from OCV vent port.

4.5.20 Install OCV vent port cover.

4.5.21 Torque OCV vent port cover to 55 to 65 lb-in. and record on Attachment 8.

SIGN-OFF

4.5.22 Install OCV seal test port thermal plug and access plug.

4.5.23 Torque OCV seal test port access plug to 35 to 45 lb-ft and record on Attachment 8.

SIGN-OFF

4.5.24 Install OCV vent port thermal plug and access plug.

4.5.25 Torque OCV vent port access plug to 35 to 45 lb-ft and record on Attachment 8.

SIGN-OFF

4.5.26 **RETURN TO** Step 2.19.14.

Figure 4.1 - ICV Main O-Ring Seal Test

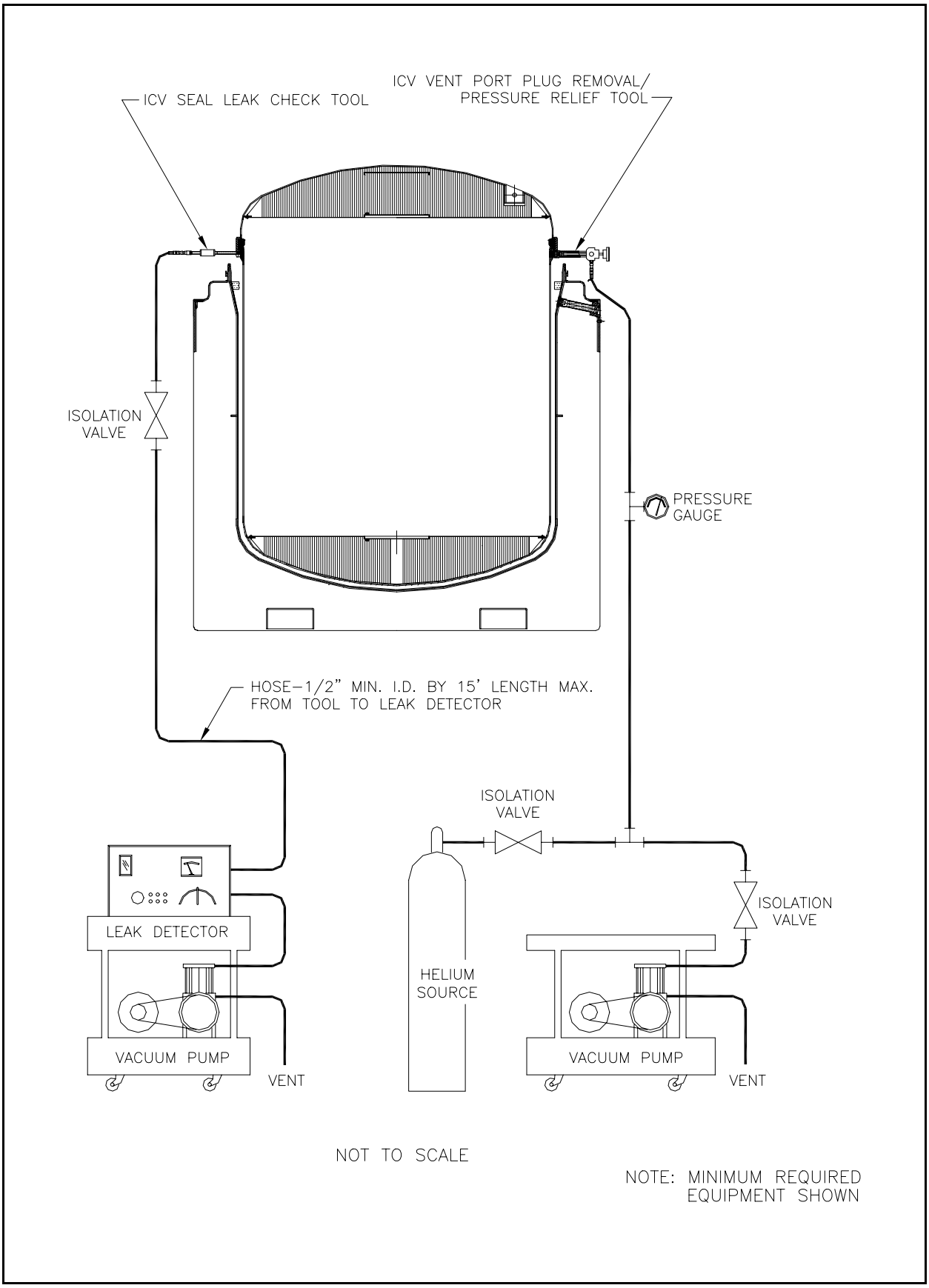

Figure 4.2 - ICV Outer Vent Port Plug Seal O-Ring Test

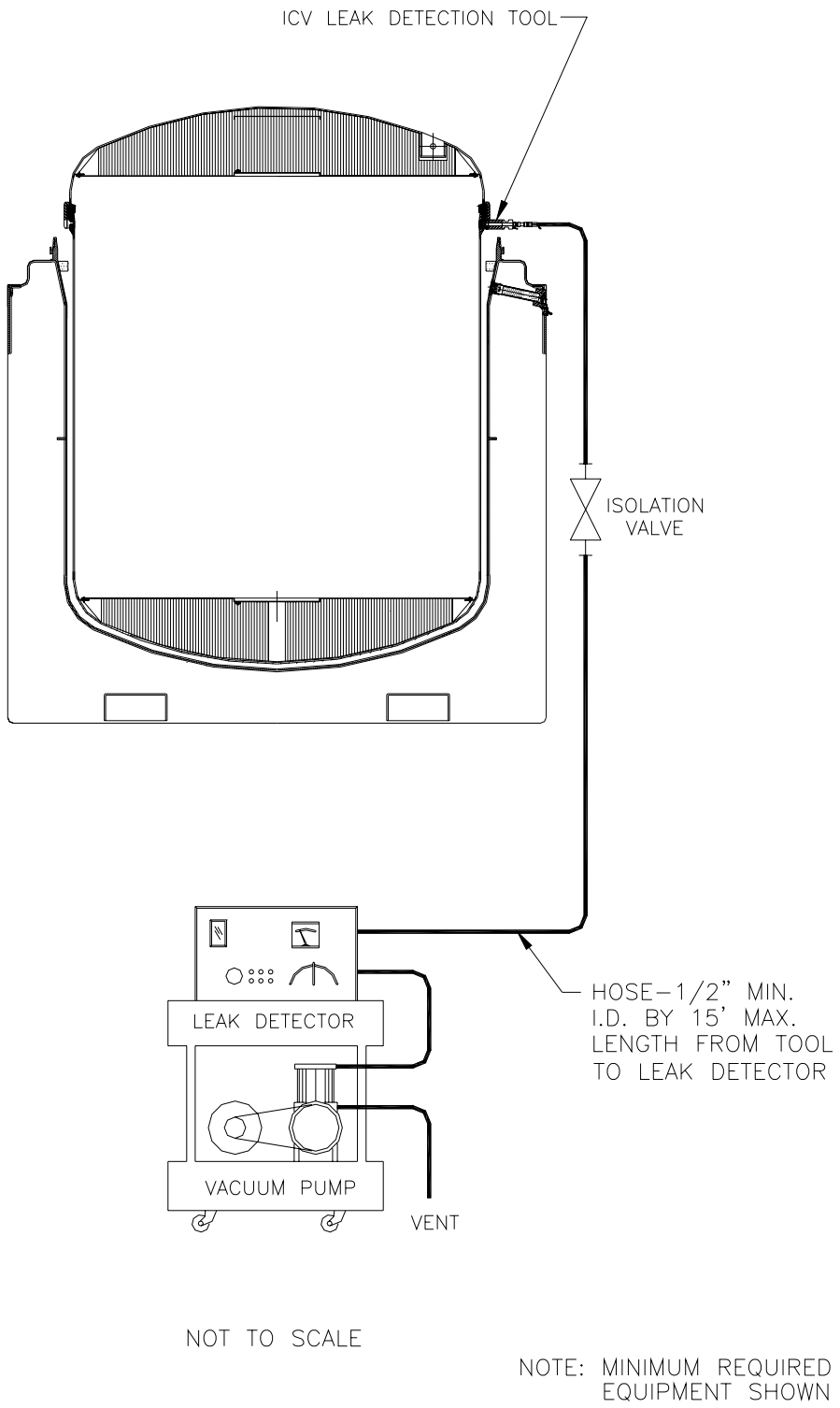

Figure 4.3 - OCV Main O-Ring Seal Test

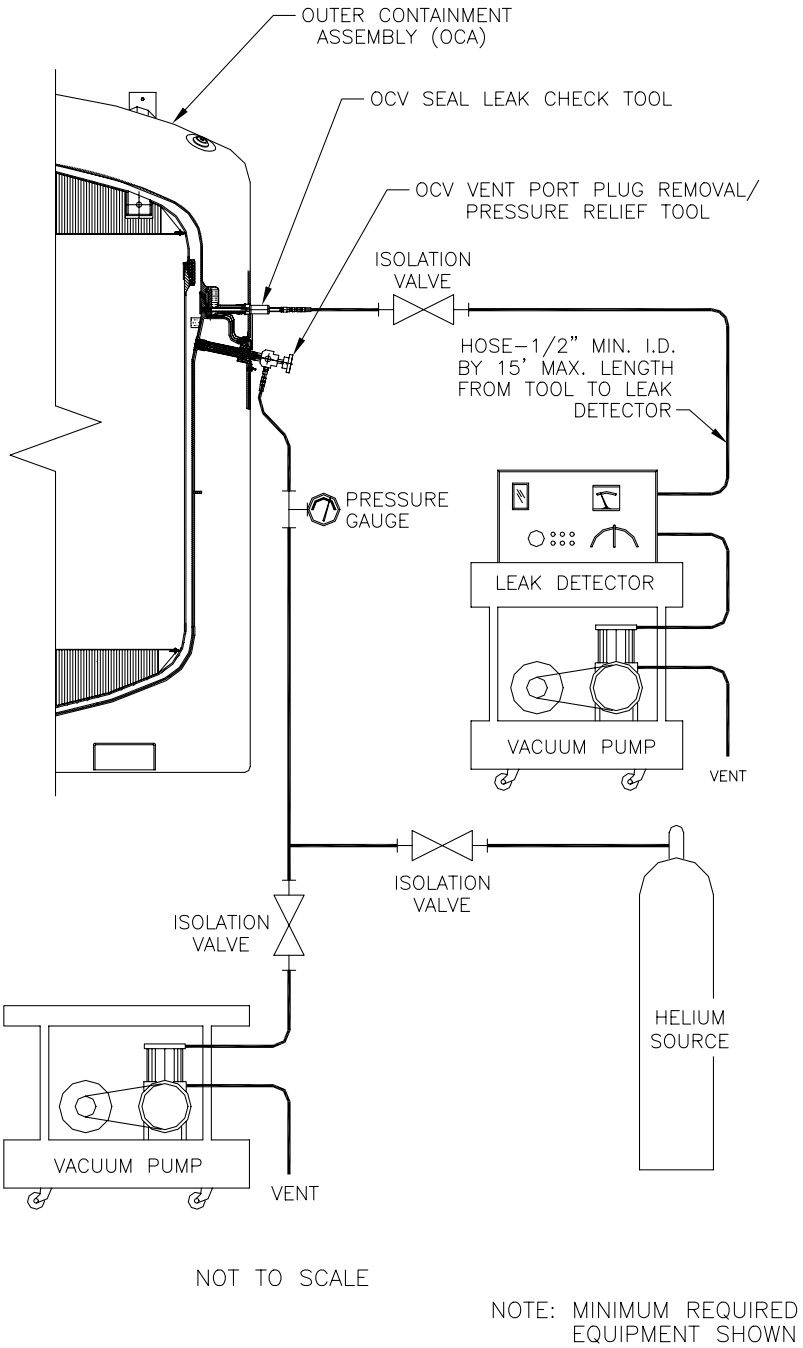

NOT TO SCALE

NOTE: MINIMUM REQUIRED EQUIPMENT SHOWN

Figure 4.4 - OCV Vent Port Plug Seal O-Ring Test

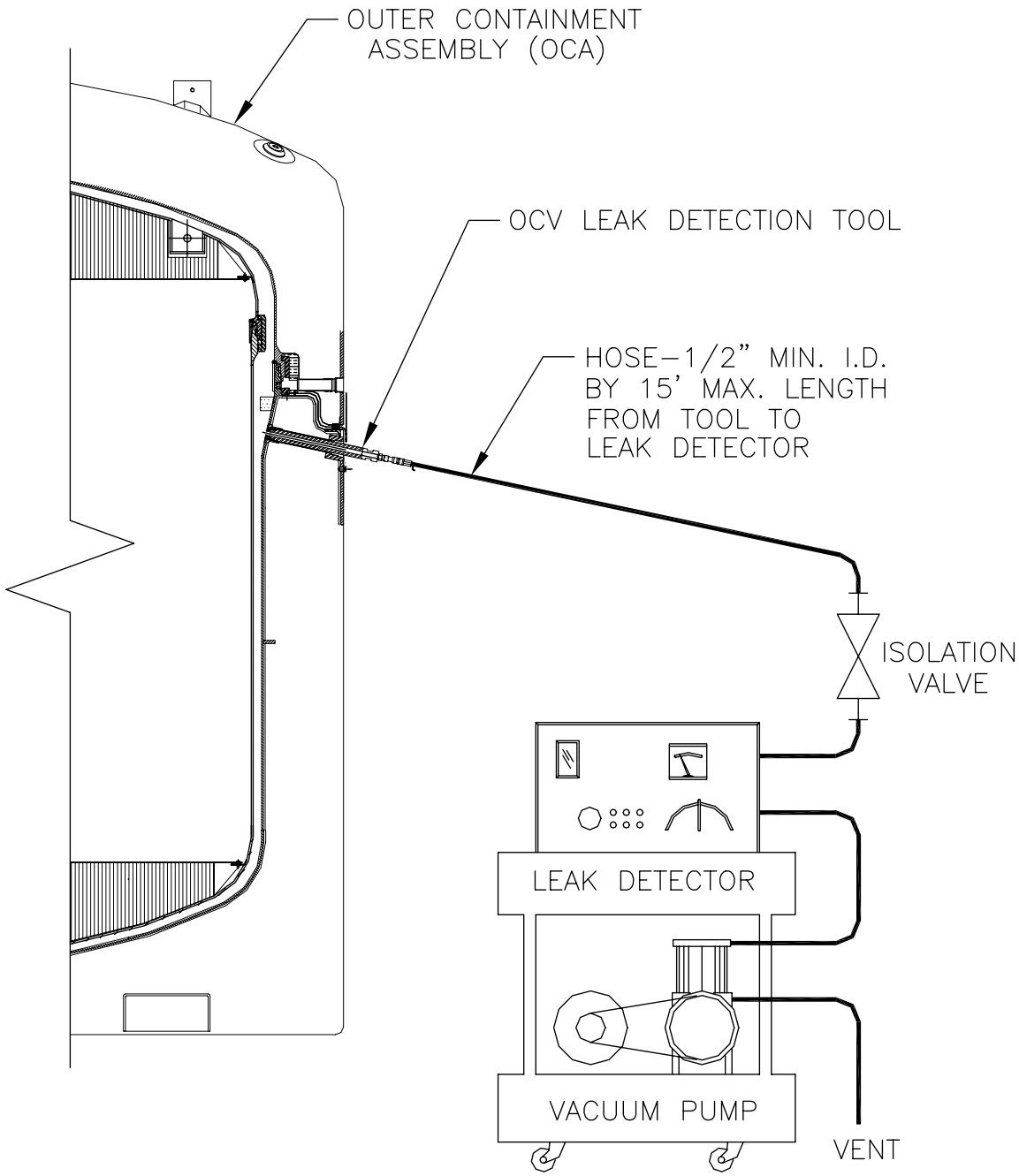

NOT TO SCALE

NOTE: 1. MINIMUM REQUIRED EQUIPMENT SHOWN

Attachment 1 - High-Wattage CH Packaging Receipt and Inspection Data Sheet

CH PACKAGING RECEIPT AND INSPECTION DATA SHEET		
STEP(S)	**DESCRIPTION**	**INITIALS**
Facility: _____ Date: _____		
2.2.1	OCA S/N:_____	
PERFORMANCE		
2.2.2	Shipping documents validated, packaging undamaged and released, and nameplate checked	
2.2.3	Maintenance labels are present and maintenance is current	
2.7.1	Activity on smears is below DOT acceptable limits Survey No:_____ Survey Date:_____	
2.7.5	OCA lid components and hardware satisfactory	
2.8.1	Activity on smears is below DOT acceptable limits Survey No:_____ Survey Date:_____	
2.8.9	ICV lid components and hardware satisfactory	
2.9.1	Activity on smears is below DOT acceptable limits Survey No:_____ Survey Date:_____	
2.9.6	OCA body inspection satisfactory	
2.10.10	OCA components and hardware satisfactory	
2.11.6	ICV body inspection satisfactory	
2.12.9	ICV components and hardware satisfactory	
2.13.4	ICV free of water	
2.14.1	Preloading preparations and inspections complete	
ACCOUNTABILITY		

Performers, enter printed name, signature, date and initials:

Printed Name	Signature	Date	Initials

REMARKS: _____

REVIEW/VALIDATIONS: _____ _____ _____

Supervisor: (Print Name) Signature Date

Attachment 2 - High-Wattage CH Packaging Loading Data Sheet

CH PACKAGING LOADING DATA SHEET			
STEP(S)	**DESCRIPTION**		**INITIALS**
Facility:_____		**Date:**_____	
2.16.1	OCA S/N:_____		
PERFORMANCE			
2.16.2	Pallet S/N:_____ OR SWB Ratchet Strap S/Ns:_____ _____ _____		
2.16.4	Payload assembled in accordance with the CH-TRAMPAC		
2.16.5	Highest **ACTUAL** container wattage = Content Code LA154A _____ watts Content Code LA154B _____ watts Content Code LA154C _____ watts Content Code LA154D _____ watts Content Code SQ154A _____ watts Content Code SQ154B _____ watts Content Code SQ154C _____ watts Content Code SQ154D _____ watts Content Code SQ154E _____ watts Content Code SQ154F _____ watts Content Code SQ154G _____ watts		
2.16.6	Content Code	Check box if **ACTUAL** container wattage is ≤ value in table below.	
	LA154A	1.8219 ☐	
	LA154B	2.4053 ☐	
	LA154C	1.6762 ☐	
	LA154D	2.0513 ☐	
	SQ154A	0.9670 ☐	
	SQ154B	1.4230 ☐	
	SQ154C	1.0886 ☐	
	SQ154D	1.3233 ☐	
	SQ154E	0.8752 ☐	
	SQ154F	2.3247 ☐	
	SQ154G	0.9412 ☐	
2.16.12	Payload assembly weight:_____		
2.16.14	Empty packaging weight:_____		
2.16.15	Loaded package total weight:_____ **Not to exceed: (19,250 lb** - TRUPACT-II)		
2.17.1	ICV serial number: _____		
2.17.2	Torque wrench S/N: _____	Due: _____	
	Torque wrench S/N: _____	Due: _____	

Attachment 2 - High-Wattage CH Packaging Loading Data Sheet

CH PACKAGING LOADING DATA SHEET		
2.17.12	Ambient atmospheric pressure:_____ Torr	
2.17.16	ICV evacuation start: Time:_____ Date:_____	
2.17.19	ICV pressure:_____ mTorr	
2.17.21	ICV evacuation end: Time:_____ Date:_____	
2.17.22	T_{start}: Time:_____ Date:_____	
2.18.8	Stabilization start: Time:_____ Date:_____	
2.18.12	Stabilization end: Time:_____ Date:_____	
2.18.16	ICV inner vent port plug torqued to specified value	
2.18.17	ICV preshipment leakage rate test performed	
2.18.19	ICV lock bolts torqued to specified value	
2.19.2	OCA S/N:_____	
2.19.13	OCV preshipment leakage rate test performed	
2.19.15	OCA lock bolts torqued to specified values	
2.19.18	Tamper indicating security seals installed and numbers recorded Seal No: _____ Seal Date: _____ Seal No: _____ Seal Date: _____	
2.19.19	Containers and payload assembly approved in the WWIS; final submittal has occurred.	

ACCOUNTABILITY

Performers, enter printed name, signature, date and initials:

Printed Name	Signature	Date	Initials

REMARKS: _____

REVIEW/VALIDATIONS: _____ _____ _____

Supervisor: (Print Name) Signature Date

Attachment 3 - High-Wattage Loaded CH Package Trailer Data Sheet

LOADED CH PACKAGE TRAILER DATA SHEET		
STEP(S)	**DESCRIPTION**	**INITIALS**
Facility:_____ Date: _____		
PERFORMANCE		
2.16.3 or 2.20.1	Shipment No.:_____ Trailer No.:_____ Package Nos.:_____	
2.20.3	Trailer Inspection Date:_____	
2.20.6	Position #1 package S/N: _____ Weight: _____ lb Position #2 package S/N: _____ Weight: _____ lb Position #3 package S/N: _____ Weight: _____ lb	
2.20.7	Payload weight:_____	
2.20.8	Shipment complies with 49 CFR Part 172, Subparts D, E, and F	
2.20.10	Shipping papers are in accordance with 49 CFR Part 172, Subpart C	
2.20.11	T_{ship} Time _____ Date _____	
2.20.12	$T_{loading}$ = _____ Hours	
2.20.13	$T_{loading}$ < 24 hours	
2.20.16	Trailer loading complete	
ACCOUNTABILITY		

Performers, enter printed name, signature, date and initials:

Printed Name	Signature	Date	Initials
_____	_____	_____	_____
_____	_____	_____	_____
_____	_____	_____	_____
_____	_____	_____	_____
_____	_____	_____	_____

REMARKS: _____

_____

_____

_____

REVIEW/VALIDATIONS: _____ _____ _____

Supervisor: (Print Name) Signature Date

Attachment 4 - High-Wattage Loaded Package Receipt and Processing Data Sheet

LOADED PACKAGE RECEIPT AND PROCESSING DATA SHEET		
STEP(S)	**DESCRIPTION**	**INITIALS**
Facility: _____	Date: _____	
	PERFORMANCE	
2.16.1 or 2.21.1	OCA serial number: _____	
2.17.25	Filter surveyed for contamination	
2.17.26	$T_{unload_120} = T_{start} + 120$ hours or $T_{unload_240} = T_{start} + 240$ hours Time: _____ Date: _____	
2.21.2	T_{arrive} = Actual Time: _____ Date: _____	
2.21.3	$T_{unload_24} = T_{arrive} + 24$ hours Time: _____ Date: _____	
2.21.4	T_{Final} Time: _____ Date: _____	
2.21.5	Shipping documents validated, package undamaged and released	
2.21.6	Package external survey complete and below DOT acceptable limits	
2.23.17	Activity on smears at or below acceptable limits	
2.24.8	T_{ICV_open} = Actual Time: _____ Date: _____	
2.24.13	Activity on smears at or below acceptable limits	
2.24.17	Activity on smears at or below acceptable limits	
2.25.4	Payload inspected for damage	
2.25.5	Activity on smears at or below acceptable limits	

ACCOUNTABILITY

Performers, enter printed name, signature, date and initials:

Printed Name	Signature	Date	Initials

REMARKS: _____

REVIEW/VALIDATIONS:

Supervisor: (Print Name)	Signature	Date

Attachment 5 - High-Wattage Empty Packaging Shipment Data Sheet

EMPTY PACKAGING SHIPMENT DATA SHEET		
STEP(S)	**DESCRIPTION**	**INITIALS**
Facility:_____ **Date:**_____		
PERFORMANCE		
2.26.1	OCA S/N:_____	
2.26.2	Torque wrench S/N:_____ Due:_____ Torque wrench S/N:_____ Due:_____	
2.26.3	Packaging maintenance is current	
2.27.1	OCA lid interior and exterior survey complete and below DOT acceptable limits: Survey No:_____ Survey Date:_____	
2.27.5	OCA lid components and hardware satisfactory	
2.28.1	ICV lid interior and exterior survey complete and below DOT acceptable limits: Survey No:_____ Survey Date:_____	
2.28.9	ICV lid components and hardware satisfactory	
2.29.1	OCA body exterior and ICV body interior surveys complete and below DOT acceptable limits. Survey No:_____ Survey Date:_____	
2.29.6	OCA body inspection satisfactory	
2.30.10	OCA components and hardware satisfactory	
2.31.6	ICV body inspection satisfactory	
2.32.9	ICV components and hardware satisfactory	
2.33.4	ICV free of water	
2.33.5	Preshipment inspections complete	
2.34.2	ICV serial number:_____	
2.34.16	ICV hardware and OCV seal test port plug torqued within designated range: ☐ ICV inner vent port plug ☐ ICV seal test port plug ☐ OCV seal test port plug ☐ ICV lock bolt(s) at 28 to 32 lb-ft ☐ ICV outer vent port plug ☐ ICV vent port cover	
2.35.2	OCA serial number:_____	
2.35.16	OCV hardware torqued within designated range: ☐ OCV vent port plug ☐ OCV vent port cover ☐ OCV seal test port access plug at 35 to 45 lb-ft ☐ OCV vent port access plug at 35 to 45 lb-ft	

Attachment 5 - High-Wattage Empty Packaging Shipment Data Sheet

EMPTY PACKAGING SHIPMENT DATA SHEET		
	☐ OCA lock bolts at 28 to 32 lb-ft	
2.35.17	Preshipment preparations complete, unit ready for transport	

ACCOUNTABILITY

Performers, enter printed name, signature, date and initials:

Printed Name	Signature	Date	Initials

REMARKS: _____

REVIEW/VALIDATIONS: _____ _____ _____

Supervisor: (Print Name) Signature Date

Attachment 6 - High-Wattage Trailer Data Sheet

TRAILER DATA SHEET		
STEP(S)	**DESCRIPTION**	**INITIALS**
Facility:_____ Date:_____		
	PERFORMANCE	
2.36.1	Shipment No.:_____ Trailer No.:_____ Packaging Nos.:_____	
2.36.3	Trailer inspection date:_____	
2.36.6	Position #1 packaging S/N: _____ Weight: _____ lb Position #2 packaging S/N: _____ Weight: _____ lb Position #3 packaging S/N: _____ Weight: _____ lb	
2.36.7	Payload weight:_____ lb	
2.36.8	Shipment complies with 49 CFR Part 172, Subparts D and E.	
2.36.10	Shipping papers are complete.	
2.36.11	Trailer loading complete	
	ACCOUNTABILITY	

Performers, enter printed name, signature, date and initials:

Printed Name	Signature	Date	Initials

REMARKS: _____

REVIEW/VALIDATIONS: _____ _____ _____

Supervisor: (Print Name) Signature Date

Attachment 7 - ICV Preshipment Leakage-Rate Test Data Sheet

ICV PRESHIPMENT LEAKAGE-RATE TEST DATA SHEET			
STEP(S)	**PERFORMANCE**		
	Basic Data:		
4.2.1	ICV body S/N: _____	ICV lid S/N: _____	Date: _____
	MSLD model: _____	S/N: _____	
	Vacuum/pressure gauge S/N: _____	Due: _____	
	Thermometer S/N: _____	Due: _____	
	Torque wrench S/N: _____	Due: _____	
	Torque wrench S/N: _____	Due: _____	
	Calibrated leak S/N: _____	Due: _____	
	Barometer S/N: _____	Due: _____	
	He source connected	Initials: _____	
4.2.4	ICV surface temperature: _____ °C		
	Concentration Correction Factor Data:		
4.2.10	Ambient atmospheric pressure	_____	in. Hg (Patm)
4.2.12	Vacuum reading	_____	in. Hg (V1)
4.2.14	Concentration Correction Factor (CCF) = Patm/V1	_____	
	Pretest Calibration for ICV Main O-Ring Seal Test:		
4.2.15	Leak rate of standard leak	_____	scc/s
	Temperature at time of calibration	_____	°C
	Temperature adjusted leak rate used to calibrate leak detector	_____	scc/s
	Zero reading at time of calibration	_____	scc/s
	Time of calibration	_____	
	Test Data for ICV Main O-Ring Seal:		
4.2.21	He background (RB)	_____	scc/s
4.2.24	Pressure reading at end of He backfill	_____	psi
4.2.27	Displayed He reading after __3__ minute dwell (RT) =	_____	scc/s
	Post-Test Deviation Check for ICV Main O-Ring Seal Test:		
4.2.30	Temperature at time of calibration deviation check	_____	°C
	Temperature Correction Value (TC)	_____	scc/s
	Displayed He reading with standard leak installed (DR)	_____	scc/s
	Zero reading at time of calibration deviation check	_____	scc/s
	Time of calibration deviation check	_____	

Attachment 7 - ICV Preshipment Leakage-Rate Test Data Sheet

ICV PRESHIPMENT LEAKAGE-RATE TEST DATA SHEET			
STEP(S)	**PERFORMANCE**		
	Leak Rate Calculation for Main O-Ring Test:		
4.2.31[A]	If there is **NO** difference in the Temperature Correction Value (TC) from the displayed He reading with standard leak installed (DR), use the following equation: Leak Rate = (RT - RB) × CCF LR = (_____ - _____) × _____ =	_____	scc/s
4.2.31[B]	If the Temperature Correction Value (TC) is **LESS** than the displayed He reading with standard leak installed (DR), add the calibration deviation: Leak Rate = (RT + Calibration Deviation - RB) × CCF LR = (_____ + _____ - _____) × _____ =	_____	scc/s
4.2.31[C]	If the Temperature Correction Value (TC) is **MORE** than the displayed He reading with standard leak installed (DR), subtract the calibration deviation: Leak Rate = (RT - Calibration Deviation - RB) × CCF LR = (_____ - _____ - _____) × _____ =	_____	scc/s
4.2.33[C]	NCR number recorded _____	_____	Initials
4.2.36	ICV seal test port plug at 55 to 65 lb-in.	_____	Initials
4.3.4	ICV outer vent port plug at 55 to 65 lb-in.	_____	Initials
	Pretest Calibration for Outer Vent Port Plug Seal O-Ring Test:		
4.3.8	Leak rate of standard leak	_____	scc/s
	Temperature at time of calibration	_____	°C
	Temperature adjusted leak rate used to calibrate leak detector	_____	scc/s
	Zero reading at time of calibration	_____	scc/s
	Time of calibration	_____	
	Test Data for Outer Vent Port Plug O-Ring Seal Test:		
4.3.12	Displayed He reading after __3__ minute dwell (RT) =	_____	scc/s
	Post-Test Calibration Deviation Check for Outer Vent Port Plug Seal O-Ring Test:		
4.3.15	Temperature at time of calibration deviation check	_____	°C
	Temperature Correction Value (TC)	_____	scc/s
	Displayed He reading with standard leak installed (DR)	_____	scc/s
	Zero reading at time of calibration deviation check	_____	scc/s
	Time of calibration deviation check	_____	

Attachment 7 - ICV Preshipment Leakage-Rate Test Data Sheet

ICV PRESHIPMENT LEAKAGE-RATE TEST DATA SHEET		
STEP(S)	**PERFORMANCE**	
	Leak Rate Calculation for Outer Vent Port Plug Seal O-Ring Test:	
4.3.16[A]	If there is **NO** difference in the Temperature Correction Value (TC) from the displayed He reading with standard leak installed (DR), use the following equation: Leak Rate = RT × CCF LR = _____ × _____ =	_____ scc/s
4.3.16[B]	If the Temperature Correction Value (TC) is **LESS** than the displayed He reading with standard leak installed (DR), add the calibration deviation: Leak Rate = (RT + Calibration Deviation) × CCF LR = (_____ + _____) × _____ =	_____ scc/s
4.3.16[C]	If the Temperature Correction Value (TC) is **MORE** than the displayed He reading with standard leak installed (DR), subtract the calibration deviation: Leak Rate = (RT - Calibration Deviation) × CCF LR = (_____ - _____) × _____ =	_____ scc/s
4.3.18[C]	NCR number recorded _____	_____ Initials
4.3.21	ICV vent port cover at 55 to 65 lb-in.	_____ Initials
ACCOUNTABILITY		
	_____ Test performed by/Level	_____ Date
	_____ Test reviewed by/Level	_____ Date

Attachment 8 - OCV Preshipment Leakage-Rate Test Data Sheet

	OCV PRESHIPMENT LEAKAGE-RATE TEST DATA SHEET		
STEP(S)	PERFORMANCE		
	Basic Data:		
4.4.1	OCV body S/N: _____ OCV lid S/N: _____ Date: _____		
	MSLD model: _____ S/N: _____		
	Vacuum/pressure gauge S/N: _____ Due: _____		
	Thermometer S/N: _____ Due: _____		
	Torque wrench S/N: _____ Due: _____		
	Torque wrench S/N: _____ Due: _____		
	Calibrated leak S/N: _____ Due: _____		
	Barometer S/N: _____ Due: _____		
	He source connected Initials: _____		
4.4.2	OCV surface temperature: _____°C		
	Concentration Correction Factor Data:		
4.4.7	Ambient atmospheric pressure	_____	in. Hg (Patm)
4.4.9	Vacuum reading	_____	in. Hg (V1)
4.4.11	Concentration Correction Factor (CCF) = Patm/V1	_____	
	Pretest Calibration for OCV Main O-Ring Seal Test:		
4.4.13	Leak rate of standard leak	_____	scc/s
	Temperature at time of calibration	_____	°C
	Temperature adjusted leak rate used to calibrate leak detector	_____	scc/s
	Zero reading at time of calibration	_____	scc/s
	Time of calibration	_____	
	Test Data for OCV Main O-Ring Seal:		
4.4.19	He background (RB)	_____	scc/s
4.4.22	Backfill pressure reading at end of He backfill	_____	psi
4.4.25	Displayed He reading after __3__ minute dwell (RT) =	_____	scc/s
	Post-Test Calibration Deviation Check for OCV Main O-Ring Seal Test:		
4.4.28	Temperature at time of calibration deviation check	_____	°C
	Temperature Correction Value (TC)	_____	scc/s
	Displayed He reading with standard leak installed (DR)	_____	scc/s
	Zero reading at time of calibration deviation check	_____	scc/s
	Time of calibration deviation check	_____	

Attachment 8 - OCV Preshipment Leakage-Rate Test Data Sheet

	OCV PRESHIPMENT LEAKAGE-RATE TEST DATA SHEET
STEP(S)	**PERFORMANCE**
	Leak Rate Calculation for Main O-Ring Test:
4.4.29[A]	If there is **NO** difference in the Temperature Correction Value (TC) from the displayed He reading with standard leak installed (DR), use the following equation: Leakage Rate = (RT - RB) × CCF = LR = (_____ - _____) × _____ = _____ scc/s
4.4.29[B]	If the Temperature Correction Value (TC) is **LESS** than the displayed He reading with standard leak installed (DR), add the calibration deviation: Leak Rate = (RT + Calibration Deviation - RB) × CCF LR = (_____ + _____ - _____) × _____ = _____ scc/s
4.4.29[C]	If the Temperature Correction Value (TC) is **MORE** than the displayed He reading with standard leak installed (DR), subtract the calibration deviation: Leak Rate = (RT - Calibration Deviation - RB) × CCF LR = (_____ - _____ - _____) × _____ = _____ scc/s
4.4.31[C]	NCR number recorded _____ _____ Initials
4.4.34	OCV seal test port plug at 55 to 65 lb-in. _____ Initials
4.5.4	OCV vent port plug at 55 to 65 lb-in. _____ Initials
	Pretest Calibration for OCV Vent Port Plug Seal O-Ring Test:
4.5.8	Leak rate of standard leak _____ scc/s Temperature at time of calibration _____ °C Temperature adjusted leak rate used to calibrate leak detector _____ scc/s Zero reading at time of calibration _____ scc/s Time of calibration _____
	Test Data for OCV Vent Port Plug Seal O-Ring:
4.5.12	Displayed He reading after __3__minute dwell (RT) = _____ scc/s
	Post-Test Calibration Deviation Check for OCV Vent Port Plug Seal O-Ring Test:
4.5.15	Temperature at time of calibration deviation check _____ °C Temperature Correction Value (TC) _____ scc/s Displayed He reading with standard leak installed (DR) _____ scc/s Zero reading at time of calibration deviation check _____scc/s Time of calibration deviation check _____

Attachment 8 - OCV Preshipment Leakage-Rate Test Data Sheet

	OCV PRESHIPMENT LEAKAGE-RATE TEST DATA SHEET	
STEP(S)	PERFORMANCE	
	Leak Rate Calculation for OCV Vent Port Plug Seal O-Ring Test:	
4.5.16[A]	If there is **NO** difference in the Temperature Correction Value (TC) from the displayed He reading with standard leak installed (DR), use the following equation: Leakage Rate = (RT) × CCF LR = (_____) × _____	_____ scc/s
4.5.16[B]	If the Temperature Correction Value (TC) is **LESS** than the displayed He reading with standard leak installed (DR), add the calibration deviation: Leakage Rate = (RT + Calibration Deviation) × CCF LR = (_____ + _____) × _____ =	_____ scc/s
4.5.16[C]	If the Temperature Correction Value (TC) is **MORE** than the displayed He reading with standard leak installed (DR) subtract the calibration deviation: Leakage Rate = (RT - Calibration Deviation) × CCF LR = (_____ - _____) × _____ =	_____ scc/s
4.5.18[C]	NCR number recorded _____	_____ Initials
4.5.21	OCV vent port cover at 55 to 65 lb-in.	_____ Initials
4.5.23	OCV seal test port access plug at 35 to 45 lb-ft	_____ Initials
4.5.25	OCV vent port access plug at 35 to 45 lb-ft	_____ Initials
	ACCOUNTABILITY	
	_____ Tests performed by/Level	_____ Date
	_____ Tests reviewed by/Level	_____ Date

Attachment 9 - Time and Date Data Sheet for Shipment of High-Wattage Waste

TIME AND DATE DATA SHEET FOR SHIPMENT OF HIGH-WATTAGE WASTE

Shipment No.: _____ Packaging OCA Body/Lid No.: _____

To be completed by TCO or designee for each TRUPACT-II shipping high-wattage waste.

Step No.	Activity	Date Recorded	Time Recorded	Completion of Activity (Indicate by check mark [✔])
2.17.22	T_{start}			
2.20.11	Record date and time of departure of shipment from site			
2.20.12	Calculate and record total loading time (Limit = 24 hours)		$T_{loading}$ = _____ hrs	
2.20.13	$T_{loading}$ < 24 hours			

I certify that the above data are accurate and compliant with the loading time limit of 24 hours, as specified in this document and Appendix 6.12 of the CH-TRU Payload Appendices.

_____ _____

Transportation Certification Official or Designee Date

Attachment 10 - Time and Date Data Sheet for Receipt of High-Wattage Waste

TIME AND DATE DATA SHEET FOR RECEIPT OF HIGH-WATTAGE WASTE

Shipment No.: _____ Packaging OCA Body/Lid No.: _____

To be completed by designated WIPP Operations Personnel for each TRUPACT-II shipping high-wattage waste.

Step No.	Activity	Recorded Date	Recorded Time	Completion of Activity (Indicate by check mark [✔])
2.21.2	Record date and time that TRUPACT-II arrives at WIPP			
2.24.9	Vent ICV within 24 hours of date and time recorded above and record vent date and time			

I certify that the above data are accurate and compliant with the Unloading Time limit of 24 hours, as specified in Appendix 6.12 of the CH-TRU Payload Appendices.

_____ _____

WIPP Operations Personnel Date